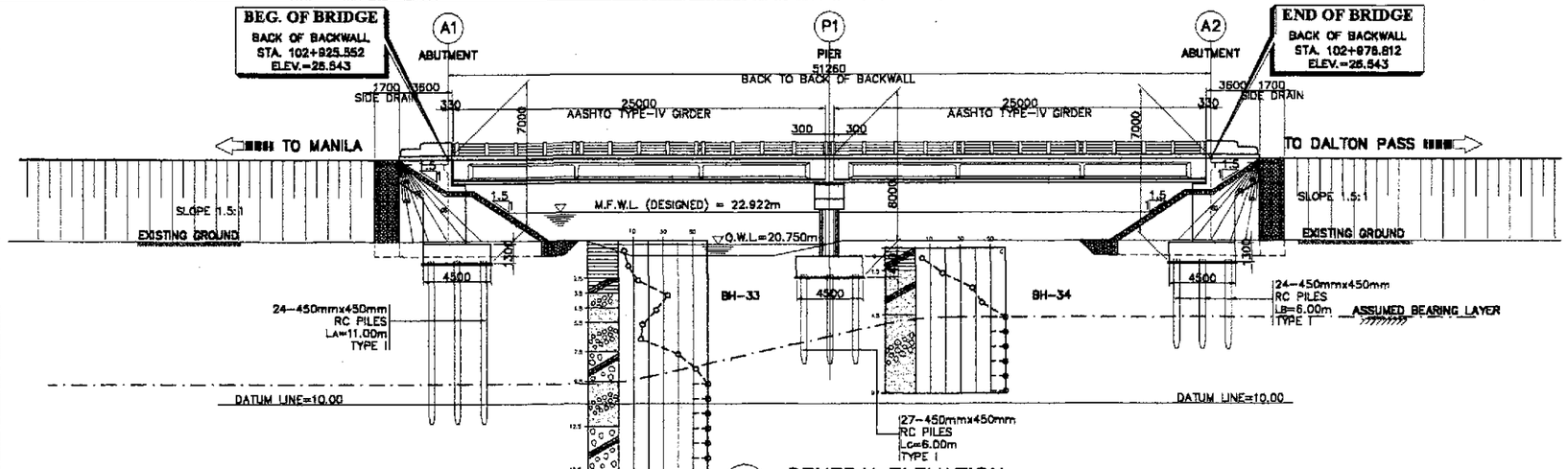

1 GENERAL ELEVATION
SCALE 1:200

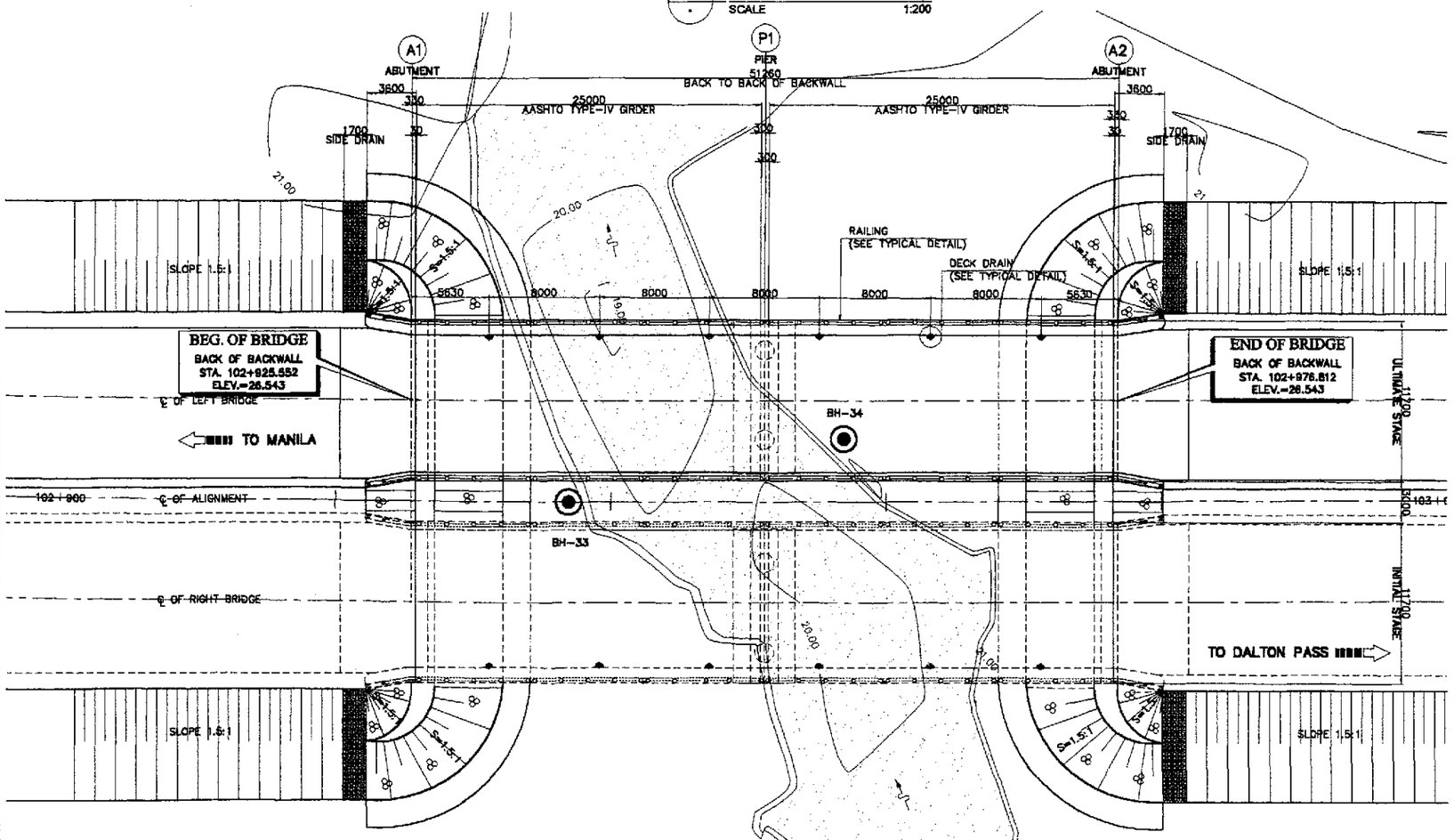

2 GENERAL PLAN
SCALE 1:200

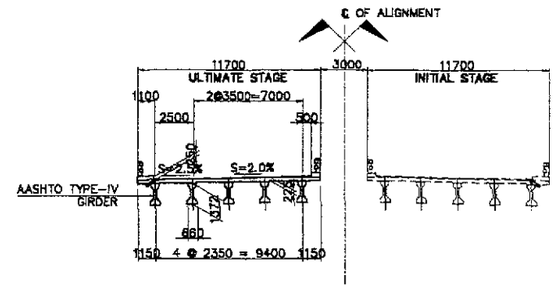

3 SECTION @ MIDSPAN
SCALE 1:200

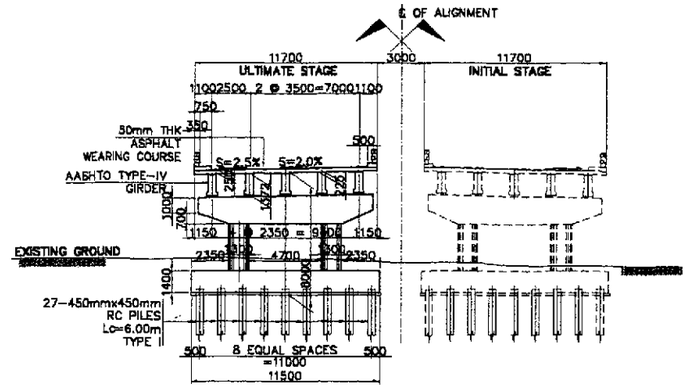

4 SECTION @ PIER P1
SCALE 1:200

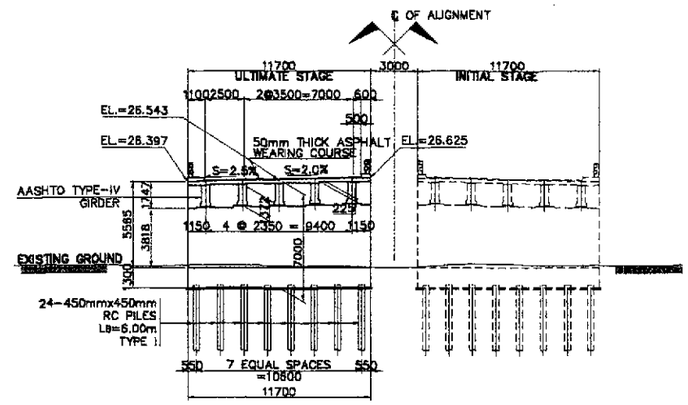

5 SECTION @ ABUTMENT A2
SCALE 1:200

NOTE :
PRIOR TO CONSTRUCTION SOIL INVESTIGATION AT ABUTMENT A1 AND A2 SHALL BE CONDUCTED FOR CONFIRMATION OF ASSUMED BEARING CAPACITY AND FOOTING ELEVATION.

THE PILE LENGTH RECOMMENDED ARE MINIMUM. SHOULD THE SOIL AT THE RECOMMENDED LENGTH BE INADEQUATE BEARING MATERIAL, LENGTH SHALL BE INCREASED. THE MINIMUM EMBEDMENT LENGTH INTO ADEQUATE SOIL FOR 400 x 400 R. C. PILE IS 1000mm WHILE FOR 450 x 450 R. C. PILE IS 1200mm.

HYDRAULIC DESIGN DATA	
VELOCITY @ 50 YEARS, V_{50}	1.578 m/sec
DISCHARGE @ 50 YEARS, Q_{50}	92.700 cu.m/sec
CATCHMENT AREA, CA	26.130 sq. km

A CABANATUAN BRIDGE NO.1 (STA.102+925.552)
SCALE AS SHOWN

PERFECTO L. ZAPLAN JR.
OIC Chief, Hydraulics Division, BOD

JICA
JAPAN INTERNATIONAL COOPERATION AGENCY
KEI KATAHIRA & ENGINEERS INTERNATIONAL
YEO YACHIYO ENGINEERING CO., LTD.

	DATE	SIGNATURE
DESIGNED	10/15/02	E.N. SALLAN
CHECKED	10/15/02	M. OGAYASHI
SUBMITTED	10/16/02	M. KIUCHI TEAM LEADER

REPUBLIC OF THE PHILIPPINES
DEPARTMENT OF PUBLIC WORKS AND HIGHWAYS

PJHL – PMO	BUREAU OF DESIGN		OFFICE OF THE SECRETARY	
Submitted By:	Reviewed By:	Recommended By:	Recommended By: (See cover sheet for Signature)	Approved By: (See cover sheet for Signature/Approval)
DANILO C. TRAJANO	ADRIANO M. DOROY	GILBERTO S. REYES	MANUEL M. BONGAN	SIMEON A. DATUMANONG
Project Director	Chief, Bridges Division	Director IV (OIC)	Undersecretary	Secretary

PROJECT AND LOCATION :
THE DETAILED DESIGN STUDY ON UPGRADING INTER-URBAN HIGHWAY SYSTEM ALONG THE PAN-PHILIPPINE HIGHWAY (Plaridel, Cabanatuan and San Jose Bypasses)
CABANATUAN BYPASS - CONTRACT PACKAGE I

SCALE : 1 : 200 FULL SIZE A1

SHEET CONTENTS :
BRIDGE NO.1
GENERAL PLAN, ELEVATION AND SECTIONS (ULTIMATE STAGE)

SHEET NO. : B1-01

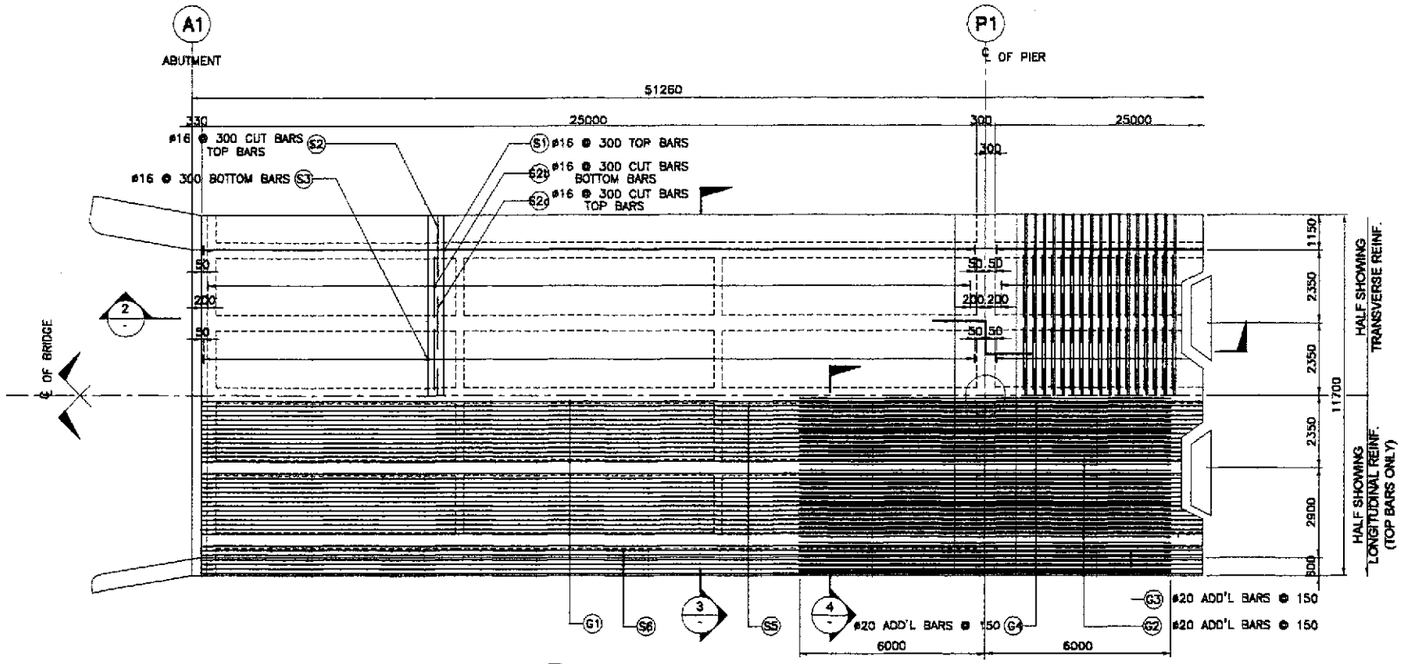

1 FRAMING PLAN
SCALE 1:100

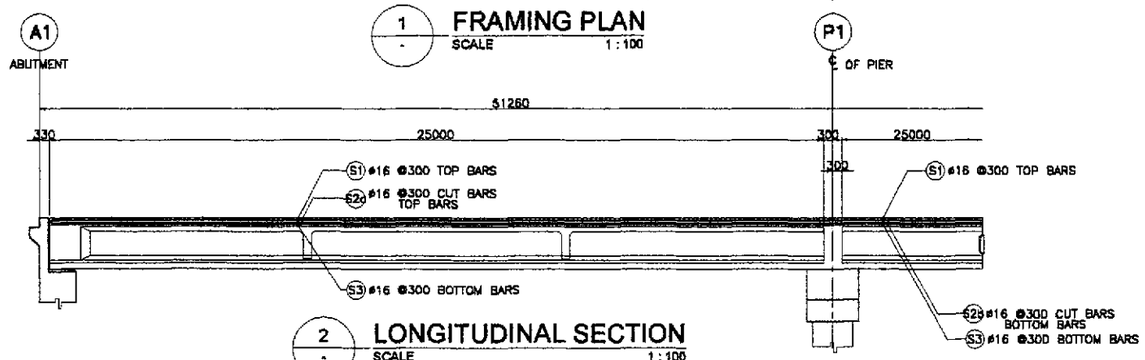

2 LONGITUDINAL SECTION
SCALE 1:100

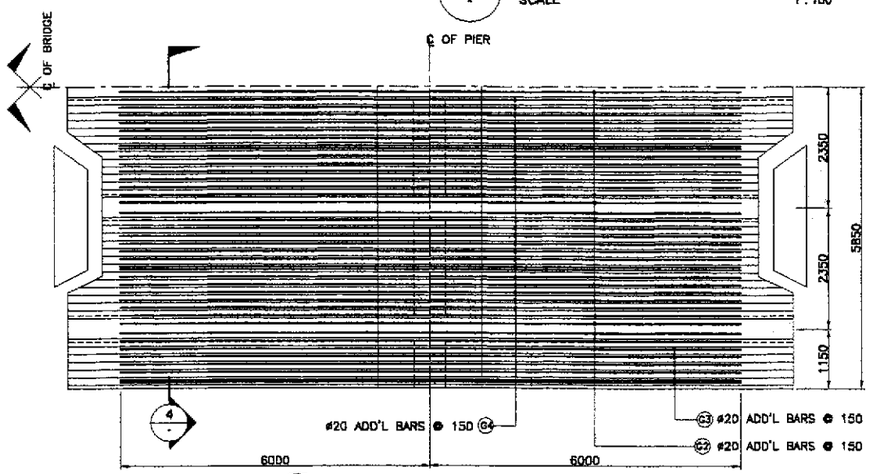

5 REINF. OVER PIER
SCALE 1:60

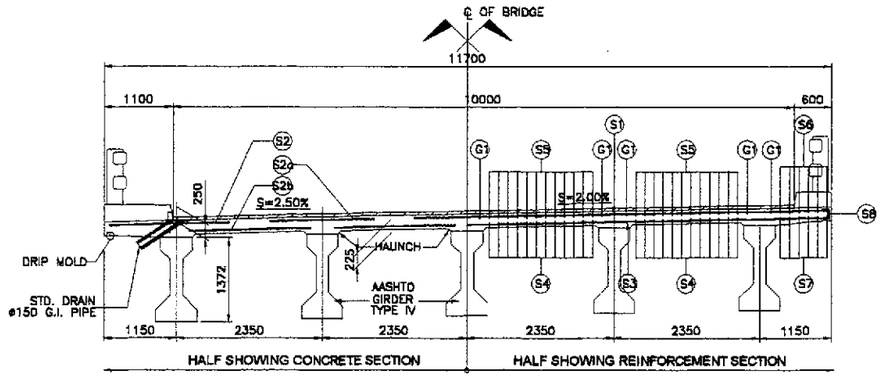

3 TYPICAL CROSS-SECTION
SCALE 1:50

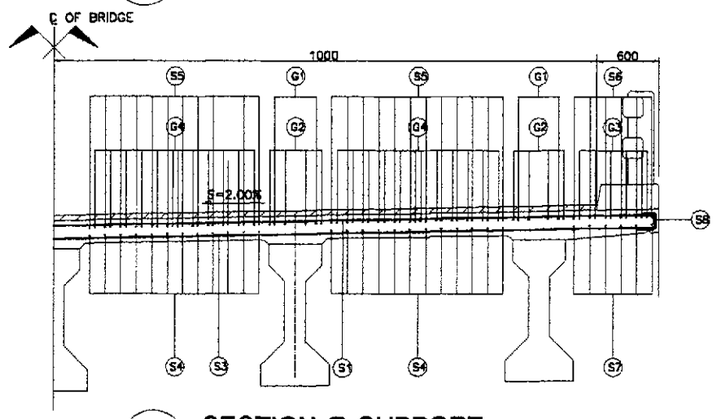

4 SECTION @ SUPPORT
SCALE 1:30

BAR BENDING DIAGRAM

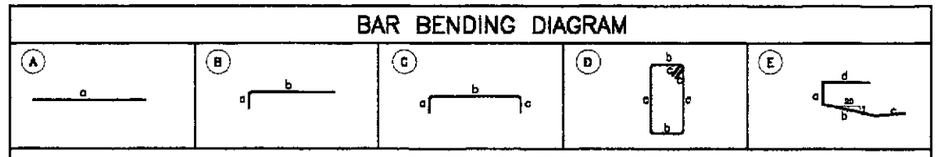

SCHEDULE OF REINFORCEMENT

LOCATION	CONCRETE VOLUME (m^3)	BAR MARK	BAR SIZE	QTY.	SPACING	BAR SHAPE	DIMENSIONS (mm) OUT TO OUT a	b	c	d	LENGTH EACH BAR (mm)	TOTAL LENGTH (m)	UNIT WT. (kg/m)	WEIGHT IN (kg)	REBAR RATIO (kg/m^3)
DECK SLAB	140.18	G1	16	10	AS SHOWN	(A)	50500	–	–	–	50500	505.00	1.579	798	188.67
		G2	20	20	150	(A)	12000	–	–	–	12000	240.00	2.466	592	
		G3	20	6	150	(A)	12000	–	–	–	12000	72.00	2.466	178	
		G3a	20	6	150	(A)	9000	–	–	–	9000	54.00	2.466	134	
		G4	20	24	150	(A)	12000	–	–	–	12000	288.00	2.466	711	
		G4a	20	24	150	(A)	9000	–	–	–	9000	216.00	2.466	533	
		S1	16	168	300	(C)	145	11600	145	–	11890	1997.52	1.579	3155	
		S2	16	332	300	(B)	145	2000	–	–	2145	712.14	1.579	1125	
		S2a	16	498	300	(A)	1700	–	–	–	1700	846.60	1.579	1337	
		S2b	16	664	300	(A)	1950	–	–	–	1950	1294.80	1.579	2045	
		S3	16	168	300	(A)	11600	–	–	–	11600	1948.80	1.579	3078	
		S4	16	48	150	(A)	50500	–	–	–	50500	2424.00	1.579	3828	
		S5	16	48	150	(A)	50500	–	–	–	50500	2424.00	1.579	3828	
		S6	16	12	AS SHOWN	(A)	50500	–	–	–	50500	606.00	1.579	957	
		S7	16	12	AS SHOWN	(A)	50500	–	–	–	50500	606.00	1.579	957	
		S8	12	224	450	(E)	145	900	600	300	1945	435.68	0.888	387	
TOTAL	140.18														

GRADE 40 TOTAL = 21,485 kgs.
GRADE 60 TOTAL = 2,148 kgs.

ESTIMATED QUANTITIES OF SUPERSTRUCTURE

ITEM NO.	DESCRIPTION	UNIT	TOTAL
404(1)a	REINFORCING STEEL GRADE 40	kgs.	36932
	DECK SLAB	21495	
	DIAPHRAGM	684	
	GIRDER	8760	
	SIDEWALK, RAILING, & POST	4677	
	APPROACH SLAB	1316	
404(1)b	REINFORCING STEEL GRADE 60	kgs.	21257
	DECK SLAB	2148	
	DIAPHRAGM	2266	
	GIRDER	11770	
	SIDEWALK, RAILING, & POST	885	
	APPROACH SLAB	4188	
405(1)	STRUCTURAL CONCRETE	cu. m.	364.55
	DECK SLAB	140.18	
	DIAPHRAGM	24.53	
	GIRDER	131.82	
	SIDEWALK, RAILING, & POST	32.88	
	APPROACH SLAB	35.14	

JICA
JAPAN INTERNATIONAL COOPERATION AGENCY
KEI KATAHIRA & ENGINEERS INTERNATIONAL
YEC YACHIYO ENGINEERING CO., LTD.

	DATE	SIGNATURE
DESIGNED	10/15/02	E. N. SALLAN
CHECKED	10/15/02	N. KOBAYASHI
SUBMITTED	10/16/02	M. KUCHI, TEAM LEADER

REPUBLIC OF THE PHILIPPINES
DEPARTMENT OF PUBLIC WORKS AND HIGHWAYS

PJHL – PMO	BUREAU OF DESIGN		OFFICE OF THE SECRETARY	
Submitted By:	Reviewed By:	Recommended By:	Recommended By: (See cover sheet for Signature)	Approved By: (See cover sheet for Signature/Approval)
DANILO C. TRAJANO, Project Director	ADRIANO M. DOROY, Chief, Bridges Division	GILBERTO S. REYES, Director IV (OIC)	MANUEL M. BONOAN, Undersecretary	SIMEON A. DATUMANONG, Secretary

PROJECT AND LOCATION :
THE DETAILED DESIGN STUDY ON UPGRADING INTER-URBAN HIGHWAY SYSTEM ALONG THE PAN-PHILIPPINE HIGHWAY (Plaridel, Cabanatuan and San Jose Bypasses)
CABANATUAN BYPASS - CONTRACT PACKAGE I

SCALE : AS SHOWN
FULL SIZE A1

SHEET CONTENTS :
BRIDGE NO. 1
DECK FRAMING PLAN AND SECTIONS (ULTIMATE STAGE)

SHEET NO. : B1-02

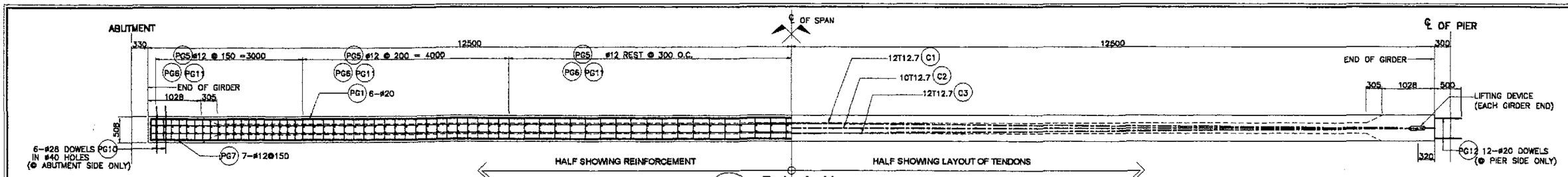

1 PLAN
SCALE 1:40

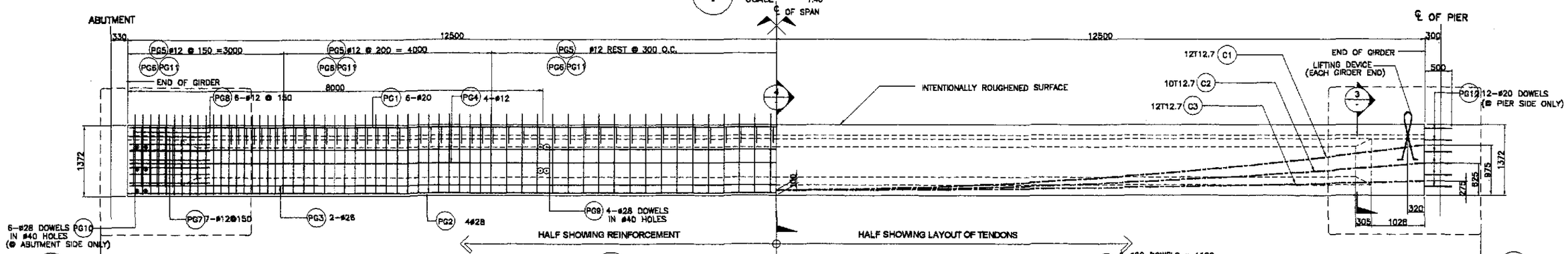

2 PRESTRESSED GIRDER ELEVATION
SCALE 1:40

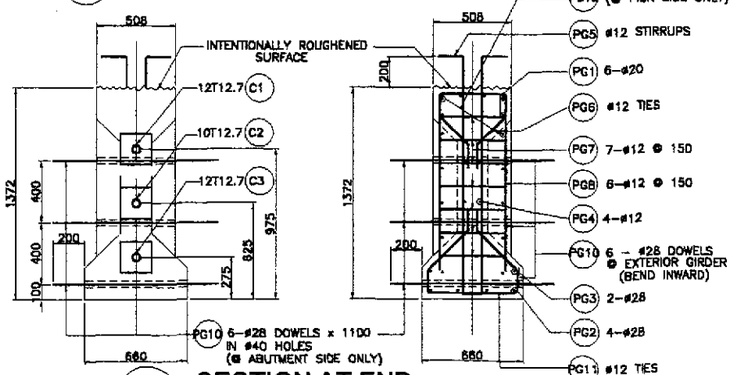

3 SECTION AT END
SCALE 1:20

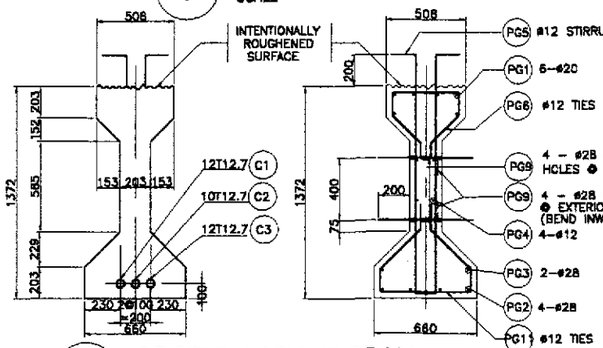

4 SECTION AT MIDSPAN
SCALE 1:20

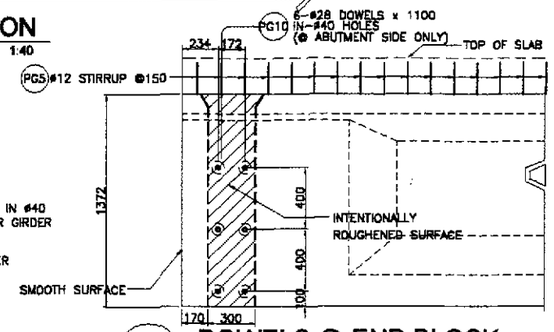

5 DOWELS @ END BLOCK
SCALE 1:20

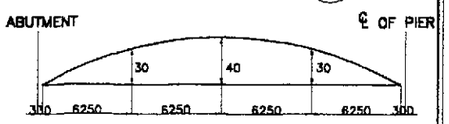

6 CAMBER DIAGRAM
NOT TO SCALE

NOTES ;

1.) SEE GENERAL NOTES, -2, FOR GIRDER DESIGN GUIDE.
2.) JACKING FORCE PER GIRDER, PJ = 4681 KN.
3.) JACKING WILL BE DONE AT BOTH ENDS.
4.) FINAL PRESTRESSING FORCE @ MIDSPAN, F_{MBT} = 3,345 kN

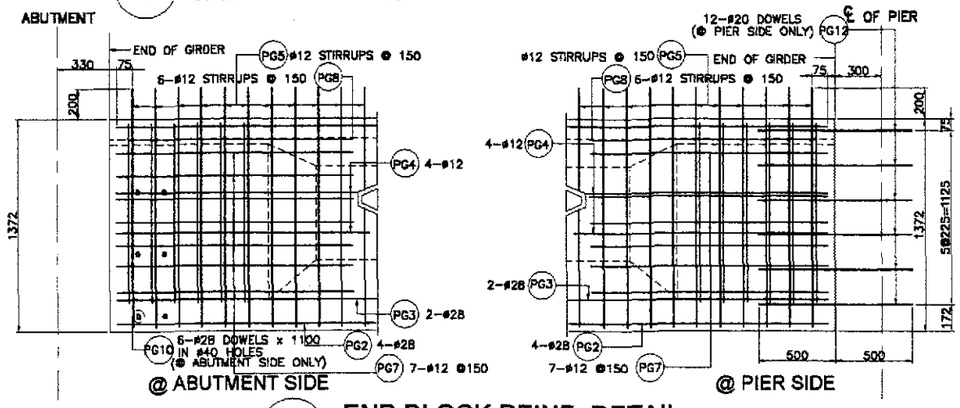

7 END BLOCK REINF. DETAIL
SCALE 1:20

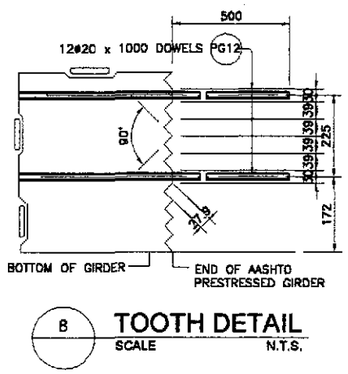

8 TOOTH DETAIL
SCALE N.T.S.

BAR BENDING DIAGRAM

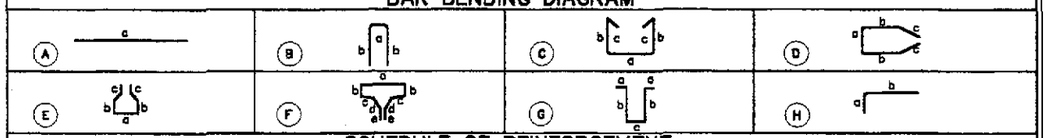

SCHEDULE OF REINFORCEMENT

STRUCTURE COMPONENT	BAR MARK	SIZE (mm)	QTY.	SPACING	BAR SHAPE	DIMENSION(mm) a	b	c	d	e	LENGTH PER BAR (mm)	TOTAL LENGTH (m)	UNIT WEIGHT (kg/m)	TOTAL WEIGHT (kg)	CONC. VOLUME (cu.m)	REBAR RATIO (kg/cu.m)	REMARKS
GIRDER	PG1	20	6	AS SHOWN	A	24920	–	–	–	–	24920	149.52	2.466	369	13.18	155.74	QUANTITIES ARE FOR ONE (1) GIRDER ONLY
	PG2	28	4	AS SHOWN	A	24920	–	–	–	–	24920	99.68	4.833	482			
	PG3	28	2	AS SHOWN	A	24920	–	–	–	–	24920	49.84	4.833	241			
	PG4	12	4	AS SHOWN	A	24920	–	–	–	–	24920	99.68	0.888	89			
	PG5	12	116	150	G	100	1540	103	–	–	3383	392.43	0.888	349			
	PG6	12	116	150	E	430	160	150	260	–	1570	182.12	0.888	162			
	PG7	12	14	150	D	430	1000	550	–	–	3530	49.42	0.888	44			
	PG8	12	12	150	C	430	1230	150	–	–	3190	38.28	0.888	34			
	PG9	28	8	AS SHOWN	A	603	–	–	–	–	603	4.82	4.833	24			
	PG10	28	6	AS SHOWN	A	1060	–	–	–	–	1060	6.36	4.833	31			
	PG11	12	116	150	E	580	160	150	360	–	1920	222.72	0.888	198			
	PG12	20	12	AS SHOWN	A	1000	–	–	–	–	1000	12.00	2.466	30			

GRADE 40 TOTAL = 876 kgs.
GRADE 60 TOTAL = 1,177 kgs.

JICA
JAPAN INTERNATIONAL COOPERATION AGENCY
KEI KATAHIRA & ENGINEERS INTERNATIONAL
YEO YACHIYO ENGINEERING CO., LTD.

	DATE	SIGNATURE
DESIGNED	10/5/02	E.N. SALLAN
CHECKED	10/15/02	
SUBMITTED	10/16/02	TEAM LEADER

REPUBLIC OF THE PHILIPPINES
DEPARTMENT OF PUBLIC WORKS AND HIGHWAYS

PUHL – PMO	BUREAU OF DESIGN		OFFICE OF THE SECRETARY	
Submitted By:	Reviewed By:	Recommended By:	Recommended By: (See cover sheet for Signature)	Approved By: (See cover sheet for Signature/Approval)
DANILO C. TRAJANO	ADRIANO M. DOROY	GILBERTO S. REYES	MANUEL M. BONOAN	SIMEON A. DATUMANONG
Project Director	Chief, Bridges Division	Director IV (OIC)	Undersecretary	Secretary

PROJECT AND LOCATION :
THE DETAILED DESIGN STUDY ON UPGRADING INTER-URBAN HIGHWAY SYSTEM ALONG THE PAN-PHILIPPINE HIGHWAY (Plaridel, Cabanatuan and San Jose Bypasses)
CABANATUAN BYPASS - CONTRACT PACKAGE I

SCALE : AS SHOWN
FULL SIZE A1

SHEET CONTENTS :
BRIDGE NO.1
AASHTO TYPE-IV GIRDER
(ULTIMATE STAGE)

SHEET NO. : B1-03

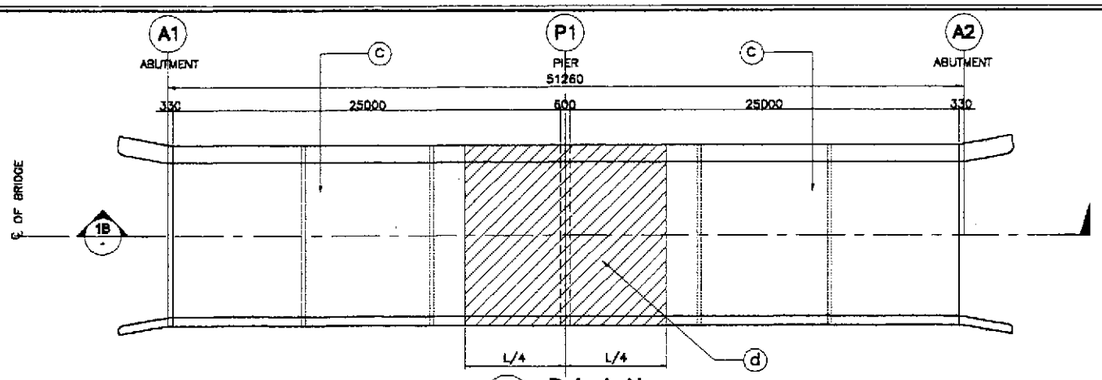

1A PLAN
SCALE 1:200

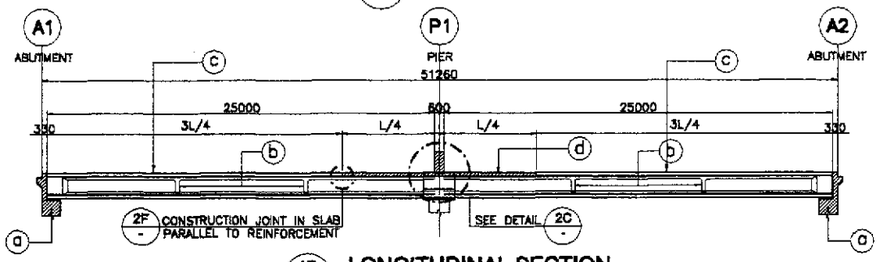

1B LONGITUDINAL SECTION
SCALE 1:200

1 CONC. POURING SEQUENCE
SCALE 1:200

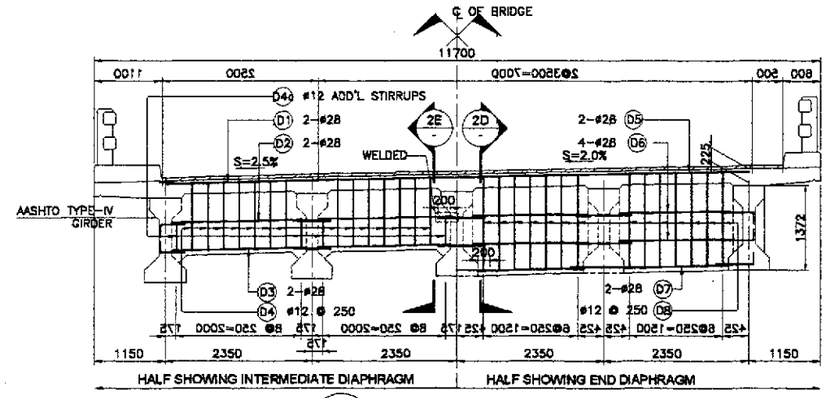

2A ELEVATION
SCALE 1:50

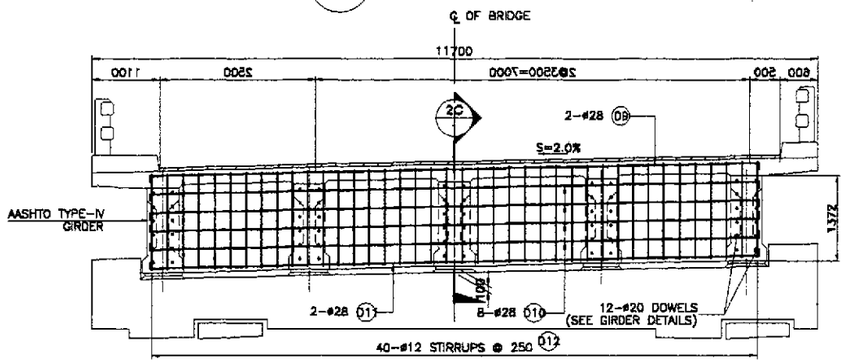

2B ELEVATION SHOWING DIAPHRAGM REINFORCEMENT @ PIER
SCALE 1:50

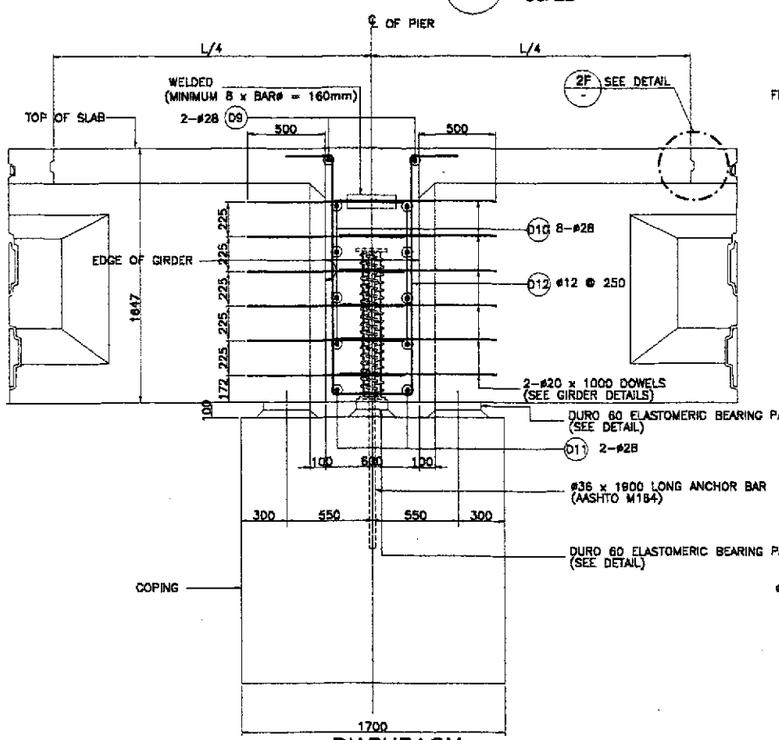

2C DIAPHRAGM @ PIER
SCALE 1:20

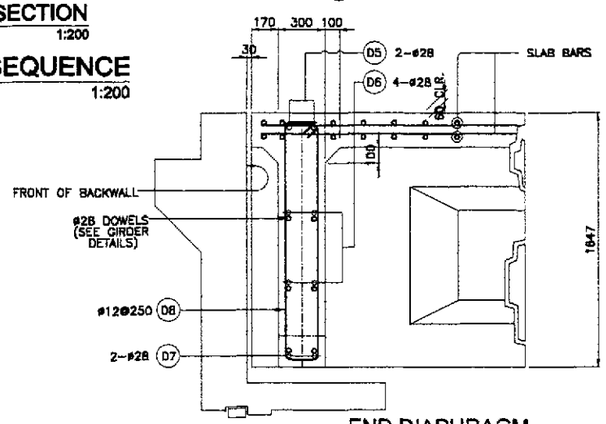

2D END DIAPHRAGM @ ABUTMENT
SCALE 1:20

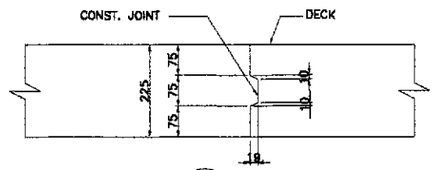

2F DETAIL
SCALE 1:20

NOTES:

1. CONCRETE AT ⓐ AREAS SHALL BE PLACED AT LEAST 21 DAYS AHEAD OF CONCRETE AT ⓑ AREAS.
2. CONCRETE AT ⓑ AREAS SHALL BE PLACED AT LEAST ONE DAY AHEAD OF CONCRETE AT ⓒ AREAS. POUR ⓓ AREAS LAST.
3. REINFORCEMENT SHALL BE CONTINUOUS AT CONSTRUCTION JOINTS.
4. SEE GIRDER DETAILS FOR SPACING OF #28 DOWELS.

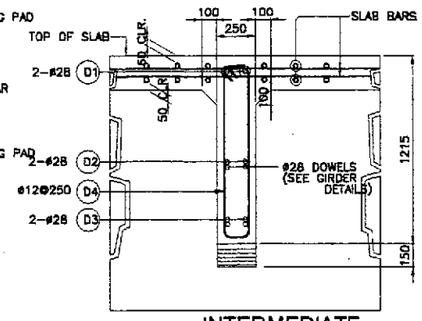

2E INTERMEDIATE DIAPHRAGM
SCALE 1:20

2 DIAPHRAGM DETAILS
SCALE AS SHOWN

BAR BENDING DIAGRAM

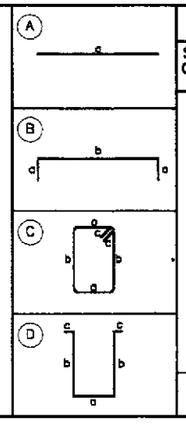

SCHEDULE OF REINFORCEMENT

STRUCTURE COMPONENT	LOCATION	CONCRETE VOLUME (m^3)	BAR MARK	BAR SIZE	QTY.	SPACING	BAR SHAPE	DIMENSIONS (mm) OUT TO OUT a	b	c	d	LENGTH PER BAR (mm)	TOTAL LENGTH (m)	UNIT WT. (kg/m)	TOTAL WEIGHT IN (kg)	REBAR RATIO (kg/m^3)
DIAPHRAGM	INTERMEDIATE DIAPHRAGM	9.79	D1	28	8	AS SHOWN	A	9400				9400	75.20	4.833	364	140.24
			D2	28	32	AS SHOWN	A	2145				2145	68.64	4.833	332	
			D3	28	32	AS SHOWN	A	2145				2145	68.64	4.833	332	
			D4	12	112	250	C	150	1200	150		3000	336.00	0.888	299	
			D4a	12	32	AS SHOWN	C	150	500	150		1500	51.20	0.888	46	
	END DIAPHRAGM	6.29	D5	28	4	AS SHOWN	A	9400				9400	37.60	4.833	182	127.10
			D6	28	32	AS SHOWN	A	1840				1840	58.88	4.833	285	
			D7	28	16	AS SHOWN	A	1840				1840	29.44	4.833	143	
			D8	12	56	250	C	200	1550	150		3800	212.80	0.888	189	
	DIAPHRAGM AT PIER	8.45	D9	28	2	AS SHOWN	B	500	9810	500		10810	21.62	4.833	105	92.03
			D10	28	8	AS SHOWN	B	500	9810	500		10810	86.48	4.833	418	
			D11	28	2	AS SHOWN	B	500	9810	500		10810	21.62	4.833	105	
			D12	12	40	250	D	500	1550	300		4200	168.00	0.888	150	
	TOTAL	24.53												GRADE 60 TOTAL =	2266 kgs.	
														GRADE 40 TOTAL =	684 kgs.	

JICA
JAPAN INTERNATIONAL COOPERATION AGENCY
KEI KATAHIRA & ENGINEERS INTERNATIONAL
YEC YACHIYO ENGINEERING CO., LTD.

	DATE	SIGNATURE
DESIGNED	10/15/02	E.N. SALLAN
CHECKED	10/15/02	K. [illegible]
SUBMITTED	10/16/02	[illegible] TEAM LEADER

REPUBLIC OF THE PHILIPPINES
DEPARTMENT OF PUBLIC WORKS AND HIGHWAYS

PJHL – PMO	BUREAU OF DESIGN		OFFICE OF THE SECRETARY	
Submitted By:	Reviewed By:	Recommended By:	Recommended By: (See cover sheet for Signature)	Approved By: (See cover sheet for Signature/Approval)
DANILO C. TRAJANO	ADRIANO M. DOROY	GILBERTO S. REYES	MANUEL M. BONDAN	SIMEON A. DATUMANONG
Project Director	Chief, Bridges Division	Director IV (OIC)	Undersecretary	Secretary

PROJECT AND LOCATION :
THE DETAILED DESIGN STUDY ON UPGRADING INTER-URBAN HIGHWAY SYSTEM ALONG THE PAN-PHILIPPINE HIGHWAY (Plaridel, Cabanatuan and San Jose Bypasses)
CABANATUAN BYPASS - CONTRACT PACKAGE I

SCALE :
AS SHOWN
FULL SIZE A1

SHEET CONTENTS :
BRIDGE NO. 1
CONCRETE POURING SEQUENCE AND DIAPHRAGM DETAILS (ULTIMATE STAGE)

SHEET NO. :
B1-04

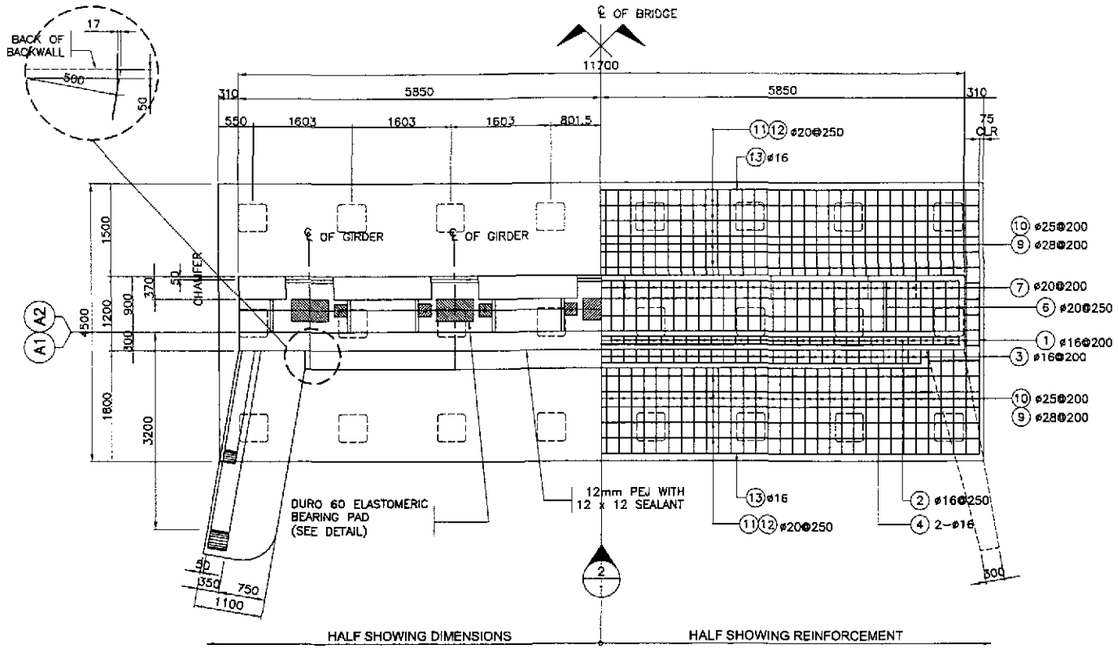

1 PLAN
SCALE 1:50

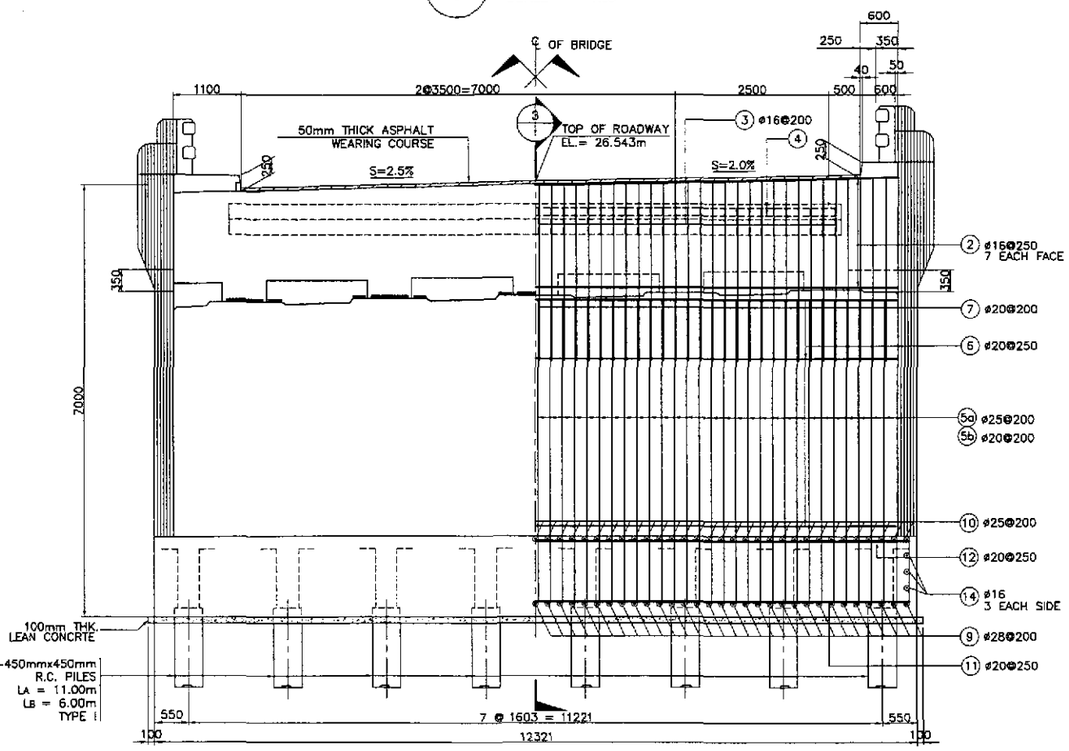

2 ELEVATION
SCALE 1:50

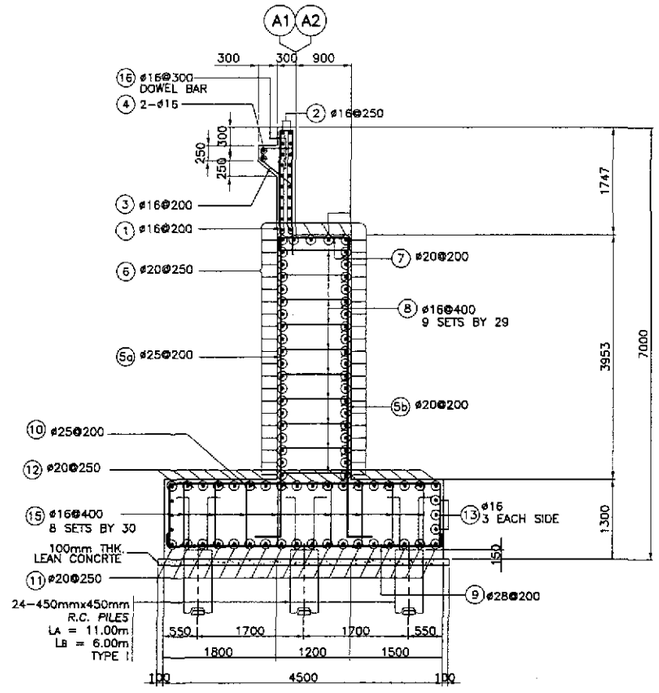

3 SECTION
SCALE 1:50

BAR BENDING DIAGRAM

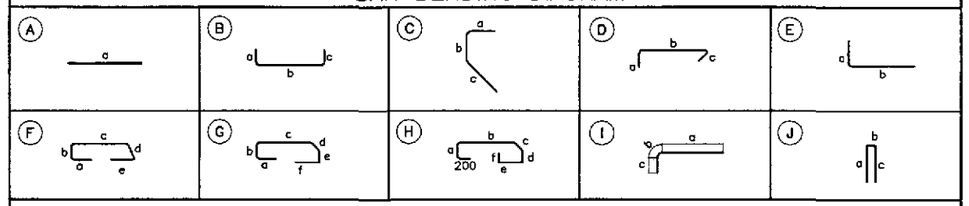

SCHEDULE OF REINFORCEMENT PER ABUTMENT

LOCATION	CONCRETE VOLUME (m^3)	BAR MARK	BAR SIZE	QTY.	SPACING	BAR SHAPE	DIMENSIONS (mm) OUT TO OUT a	b	c	d	e	f	LENGTH EA. BAR (mm)	TOTAL LENGTH (m)	UNIT WT. (kg/m)	WEIGHT (kg)	REBAR RATIO (kg/m^3)
BACKWALL	7.26	1	16	59	200	B	2000	200	2000	–	–	–	4200	247.80	1.579	392	110.51
		2	16	14	250	A	11600	–	–	–	–	–	11600	162.40	1.579	257	
		3	16	51	200	C	600	150	750	–	–	–	1500	76.50	1.579	121	
		4	16	2	AS SHOWN	A	9900	–	–	–	–	–	9900	19.80	1.579	32	
MAINWALL	55.50	5a	25	59	200	E	400	5000	–	–	–	–	5400	318.60	3.854	1228	74.56
		5b	20	59	200	E	400	5000	–	–	–	–	5400	318.60	2.466	786	
		6	20	43	250	A	11600	–	–	–	–	–	11600	498.80	2.466	1231	
		7	20	59	200	B	250	1100	250	–	–	–	1600	94.40	2.466	233	
		8	16	261	400	D	250	1100	250	–	–	–	1600	417.60	1.579	660	
FOOTING	72.07	9	28	62	200	B	700	4350	700	–	–	–	5750	356.50	4.833	1723	70.61
		10	25	62	200	B	700	4350	700	–	–	–	5750	356.50	3.854	1374	
		11	20	18	250	B	700	12200	700	–	–	–	13600	244.80	2.466	604	
		12	20	18	250	B	700	12200	700	–	–	–	13600	244.80	2.466	604	
		13	16	6	AS SHOWN	A	12200	–	–	–	–	–	12200	73.20	1.579	116	
		14	16	6	AS SHOWN	A	4350	–	–	–	–	–	4350	26.10	1.579	42	
		15	16	240	400	D	250	1150	250				1650	396.00	1.579	626	
DOWEL		16	16	34	300	E	650	500	–	–	–	–	1150	39.10	1.579	62	
TOTAL	134.83												GRADE 40 TOTAL = 2,308 kgs. GRADE 60 TOTAL = 7,783 kgs.				

JICA
JAPAN INTERNATIONAL COOPERATION AGENCY
KEI KATAHIRA & ENGINEERS INTERNATIONAL
YEC YACHIYO ENGINEERING CO., LTD.

	DATE	SIGNATURE
DESIGNED	10/4/02	P. GONZALES
CHECKED	10/15/02	N. KOBAYASHI
SUBMITTED	10/16/02	M. BUCHI TEAM LEADER

REPUBLIC OF THE PHILIPPINES
DEPARTMENT OF PUBLIC WORKS AND HIGHWAYS

PJHL – PMO	BUREAU OF DESIGN		OFFICE OF THE SECRETARY	
Submitted By:	Reviewed By:	Recommended By:	Recommended By: (See cover sheet for Signature)	Approved By: (See cover sheet for Signature/Approval)
DANILO C. TRAJANO	ADRIANO M. DOROY	GILBERTO S. REYES	MANUEL M. BONDAN	SIMEON A. DATUMANONG
Project Director	Chief, Bridges Division	Director IV (OIC)	Undersecretary	Secretary

PROJECT AND LOCATION :
THE DETAILED DESIGN STUDY ON UPGRADING INTER-URBAN HIGHWAY SYSTEM ALONG THE PAN-PHILIPPINE HIGHWAY (Plaridel, Cabanatuan and San Jose Bypasses)
CABANATUAN BYPASS - CONTRACT PACKAGE I

SCALE : 1 : 50
FULL SIZE A1

SHEET CONTENTS :
BRIDGE NO. 1
ABUTMENT A1 & A2
MAINWALL REINFORCEMENT DETAILS
(ULTIMATE STAGE)

SHEET NO. : B1-05

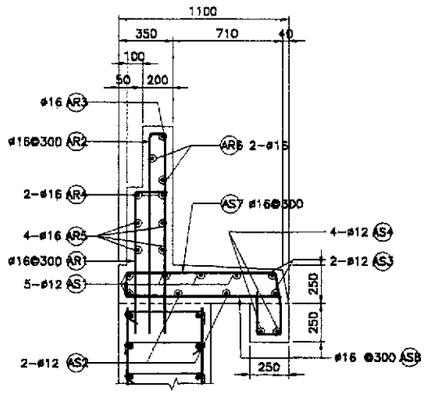

5A SECTION
SCALE 1:20

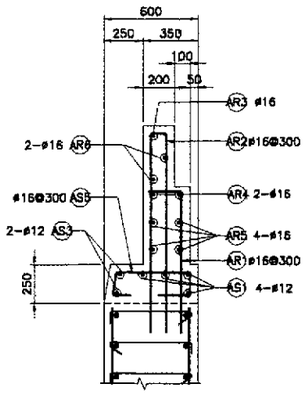

5B SECTION
SCALE 1:20

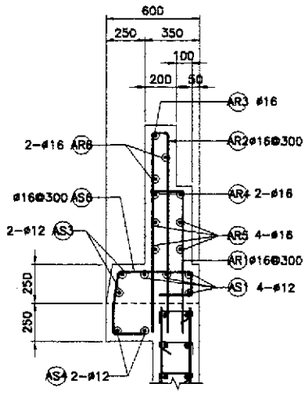

5C SECTION
SCALE 1:20

5 APPROACH RAIL DETAILS
SCALE 1:20

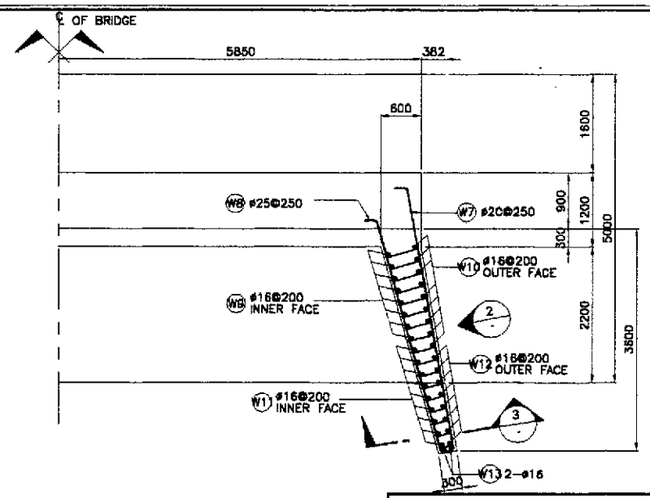

1 PLAN
SCALE 1:50

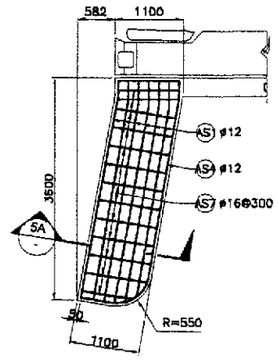

LEFT SIDE

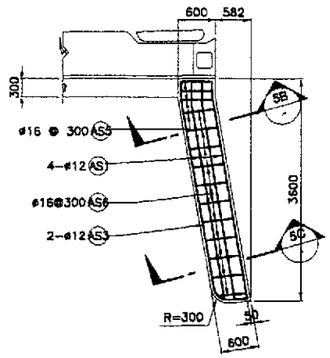

RIGHT SIDE

4 SIDEWALK DETAIL
SCALE 1:50

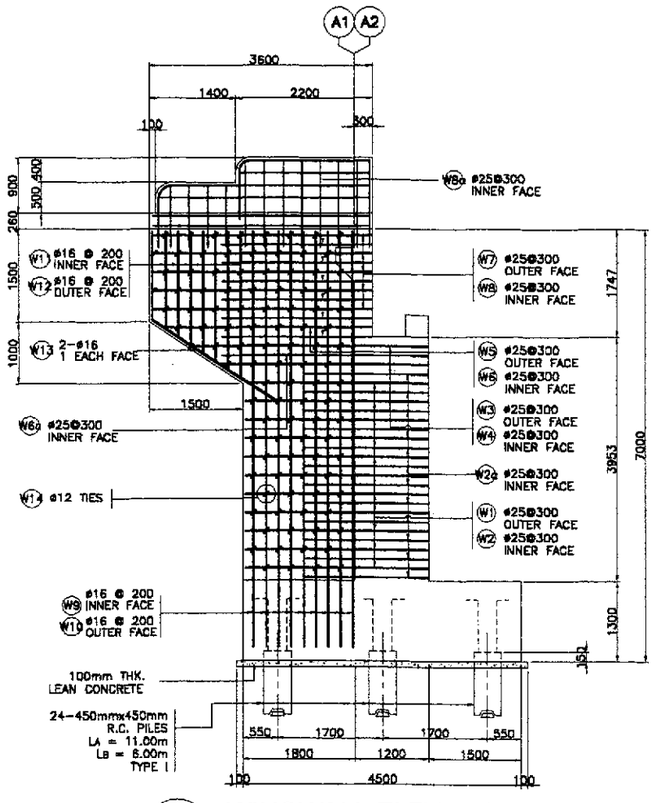

2 WINGWALL ELEVATION
SCALE 1:50

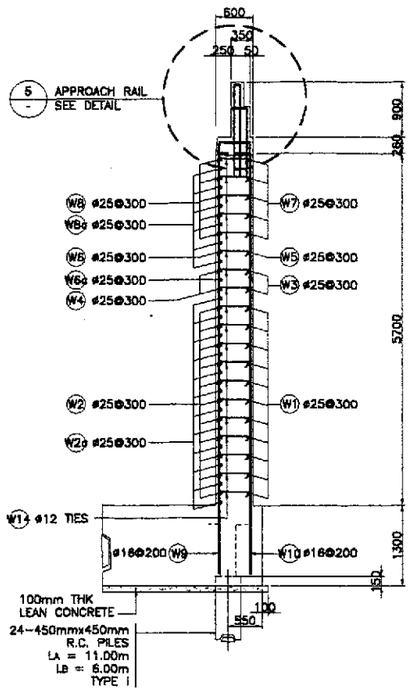

3 SECTION
SCALE 1:50

BAR BENDING DIAGRAM

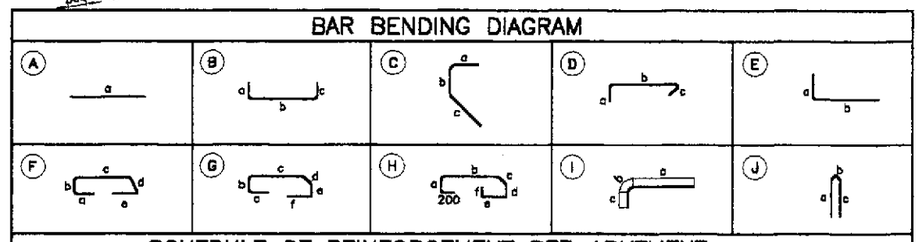

SCHEDULE OF REINFORCEMENT PER ABUTMENT

LOCATION	CONCRETE VOLUME (m³)	BAR MARK	BAR SIZE	QTY.	SPACING	BAR SHAPE	DIMENSIONS (mm) OUT TO OUT a	b	c	d	e	f	LENGTH EA. BAR (mm)	TOTAL LENGTH (m)	UNIT WT. (kg/m)	WEIGHT (kg)	REBAR RATIO (kg/m³)
WINGWALL	11.93	W1	25	22	300	B	400	2900	150	–	–	–	3450	75.90	3.854	293	179.91
		W2	25	22	300	B	400	2900	150	–	–	–	3450	75.90	3.854	293	
		W2a	25	24	300	E	400	2900	–	–	–	–	2400	57.60	3.854	222	
		W3	25	4	300	B	400	3500	150	–	–	–	4100	16.40	3.854	64	
		W4	25	4	300	B	400	3500	150	–	–	–	4100	16.40	3.854	64	
		W5	25	2	300	B	400	3300	150	–	–	–	3850	7.70	3.854	30	
		W6	25	2	300	B	400	3300	150	–	–	–	3850	7.70	3.854	30	
		W6a	25	2	300	E	400	3300	–	–	–	–	3650	7.30	3.854	28	
		W7	25	10	300	B	400	3500	150	–	–	–	4050	40.50	3.854	157	
		W8	25	10	300	B	400	3500	150	–	–	–	4050	40.50	3.854	157	
		W8a	25	12	300	E	400	3500	–	–	–	–	33.60	33.60	3.854	130	
		W9	16	18	200	E	250	6750	–	–	–	–	126	126.00	1.579	199	
		W10	16	18	200	E	250	6750	–	–	–	–	156	126.00	1.579	199	
		W11	16	14	200	E	250	1950	–	–	–	–	2200	30.80	1.579	49	
		W12	16	14	200	E	250	1950	–	–	–	–	2200	30.80	1.579	49	
		W13	16	4	AS SHOWN	C	250	1500	2500	–	–	–	4250	17.00	1.579	27	
		W14	12	220	AS SHOWN	D	170	450	170	–	–	–	790	173.80	0.888	155	
													GRADE 60 TOTAL=1,469 kgs. GRADE 40 TOTAL= 678 kgs.				
APPROACH RAILING AND SIDEWALK	3.53	AS1	12	9	AS SHOWN	A	3500	–	–	–	–	–	3500	31.50	0.888	28	98.34
		AS2	12	2	AS SHOWN	A	3500	–	–	–	–	–	3500	7.00	0.888	7	
		AS3	12	4	AS SHOWN	A	3500	–	–	–	–	–	3500	14.00	0.888	13	
		AS4	12	4	AS SHOWN	A	3500	–	–	–	–	–	3500	14.00	0.888	13	
		AS5	16	3	300	F	200	170	480	200	200	–	1250	3.75	1.579	6	
		AS6	16	11	300	G	200	170	480	200	170	200	1420	15.62	1.579	25	
		AS7	16	14	300	H	200	170	980	200	170	200	2120	29.68	1.579	47	
		AS8	16	14	300	E	200	1020	–	–	–	–	1220	17.08	1.579	27	
		AR1	16	8	300	E	200	900	–	–	–	–	1100	8.80	1.579	14	
		AR2	16	16	300	J	1300	120	1300	–	–	–	2720	43.52	1.579	69	
		AR3	16	2	AS SHOWN	I	2100	236	1300	–	–	–	3636	7.27	1.579	12	
		AR4	16	4	AS SHOWN	I	3400	236	900	–	–	–	4536	18.14	1.579	29	
		AR5	16	8	AS SHOWN	A	3400	–	–	–	–	–	3400	27.20	1.579	43	
		AR6	16	4	AS SHOWN	A	2100	–	–	–	–	–	2100	8.40	1.579	14	
													GRADE 40 TOTAL= 347 kgs.				
TOTAL	15.46												GRADE 60 TOTAL = 1,469 kgs. GRADE 40 TOTAL = 1,025 kgs.				

JICA
JAPAN INTERNATIONAL COOPERATION AGENCY
KEI KATAHIRA & ENGINEERS INTERNATIONAL
YEO YACHIYO ENGINEERING CO., LTD.

	DATE	SIGNATURE
DESIGNED	10/5/02	A. B. GONZALES
CHECKED	10/15/02	T. SAWASHI
SUBMITTED	10/16/02	W. KIKUCHI TEAM LEADER

REPUBLIC OF THE PHILIPPINES
DEPARTMENT OF PUBLIC WORKS AND HIGHWAYS

PMO	BUREAU OF DESIGN		OFFICE OF THE SECRETARY	
Submitted By:	Reviewed By:	Recommended By:	Recommended By: (See cover sheet for Signature)	Approved By: (See cover sheet for Signature/Approval)
DANILO C. TRAJANO Project Director	ADRIANO M. DOROY Chief, Bridges Division	GILBERTO S. REYES Director IV (OIC)	MANUEL M. BONDAN Undersecretary	SIMEON A. DATUMANONG Secretary

PROJECT AND LOCATION :
THE DETAILED DESIGN STUDY ON UPGRADING INTER-URBAN HIGHWAY SYSTEM ALONG THE PAN-PHILIPPINE HIGHWAY (Plaridel, Cabanatuan and San Jose Bypasses)
CABANATUAN BYPASS - CONTRACT PACKAGE I

SCALE :
AS SHOWN
FULL SIZE A1

SHEET CONTENTS :
BRIDGE NO. 1
ABUTMENT A1 & A2
WINGWALL REINFORCEMENT DETAILS
(ULTIMATE STAGE)

SHEET NO. :
B1-06

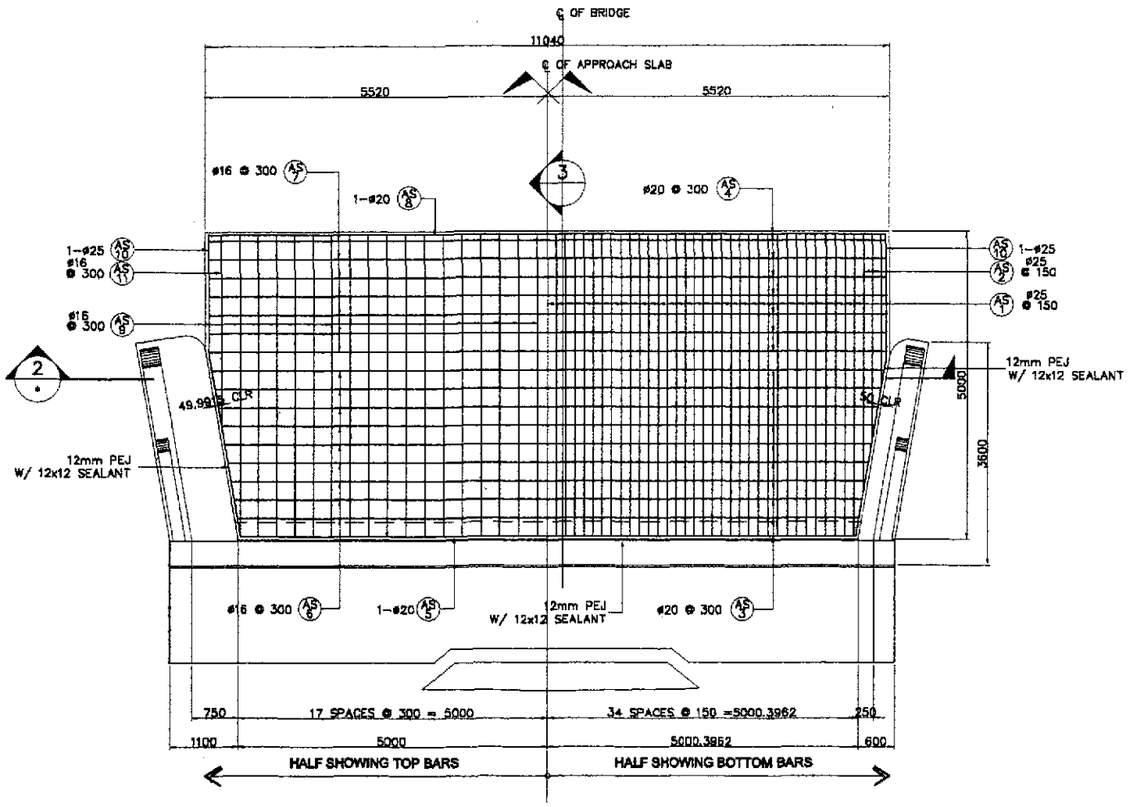

1 PLAN
SCALE 1:50

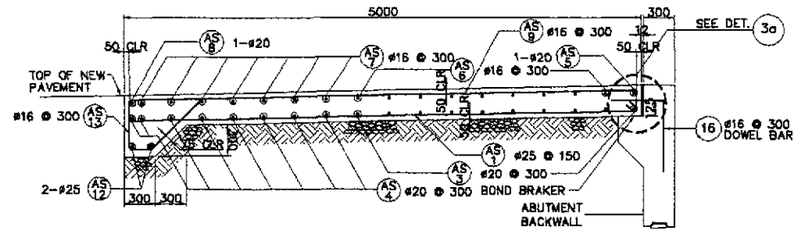

3 SECTION
SCALE 1:30

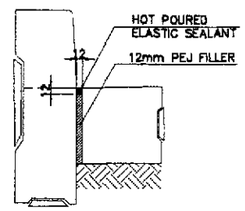

2a DETAIL
SCALE 1:10

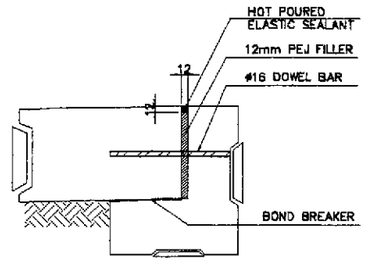

3a DETAIL
SCALE 1:10

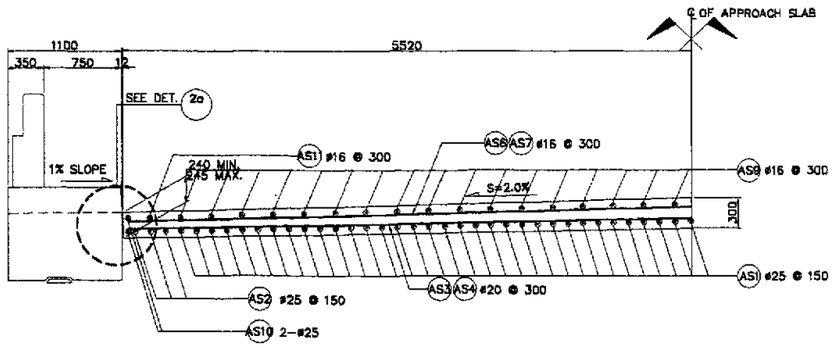

2 SECTION
SCALE 1:30

BAR BENDING DIAGRAM

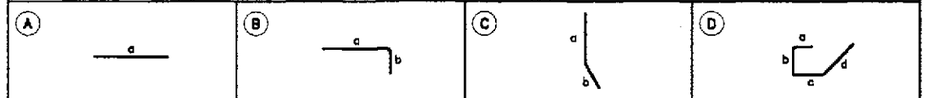

SCHEDULE OF REINFORCEMENT PER APPROACH SLAB

LOCATION	CONCRETE VOLUME (m^3)	BAR MARK	BAR SIZE	QTY.	SPACING	BAR SHAPE	DIMENSIONS (mm) OUT TO OUT a	b	c	d	e	f	LENGTH EA. BAR (mm)	TOTAL LENGTH (m)	UNIT WEIGHT (kg/m)	WEIGHT (kg)	REBAR RATIO (kg/cu.m)
APPROACH SLAB	17.57	AS1	25	68	150	B	4900	200	–	–	–	–	5100	346.80	3.854	1337	156.66
		AS2	25	6	150	B	3200	200	–	–	–	–	3400	20.40	3.854	79	
		AS3	20	10	300	A	9990	–	–	–	–	–	9990	99.90	2.466	247	
		AS4	20	8	300	A	10940	–	–	–	–	–	10940	87.52	2.466	216	
		AS5	20	1	AS SHOWN	A	9900	–	–	–	–	–	9900	9.90	2.466	25	
		AS6	16	9	300	A	10040	–	–	–	–	–	10040	90.36	1.579	143	
		AS7	16	7	300	A	10940	–	–	–	–	–	10940	76.58	1.579	121	
		AS8	20	1	AS SHOWN	A	10940	–	–	–	–	–	10940	10.94	2.466	27	
		AS9	16	34	300	B	4900	200	–	–	–	–	5100	173.40	1.579	274	
		AS10	25	4	AS SHOWN	C	2000	3000	–	–	–	–	5000	20.00	3.854	78	
		AS11	16	2	300	B	3100	200	–	–	–	–	3300	6.60	1.579	11	
		AS12	25	2	AS SHOWN	A	10940	–	–	–	–	–	10940	21.88	3.854	85	
		AS13	16	38	300	D	400	500	200	700	–	–	1800	68.40	1.579	109	
TOTAL	17.57															GRADE 40 TOTAL = 858 kgs. GRADE 60 TOTAL = 2,094 kgs.	

JICA
JAPAN INTERNATIONAL COOPERATION AGENCY
KEI KATAHIRA & ENGINEERS INTERNATIONAL
YCO YACHIYO ENGINEERING CO., LTD.

	DATE	SIGNATURE
DESIGNED	10/15/02	E. ANN SALLAN
CHECKED	10/15/02	M. KOBAYASHI
SUBMITTED	10/16/02	M. MIURA TEAM LEADER

REPUBLIC OF THE PHILIPPINES
DEPARTMENT OF PUBLIC WORKS AND HIGHWAYS

PUHL – PMO	BUREAU OF DESIGN		OFFICE OF THE SECRETARY	
Submitted By:	Reviewed By:	Recommended By:	Recommended By: (See cover sheet for Signature)	Approved By: (See cover sheet for Signature/Approval)
DANILO C. TRAJANO	ADRIANO M. DOROY	GILBERTO S. REYES	MANUEL M. BONGAN	SIMEON A. DATUMANONG
Project Director	Chief, Bridges Division	Director IV (O/C)	Undersecretary	Secretary

PROJECT AND LOCATION :
THE DETAILED DESIGN STUDY ON UPGRADING INTER-URBAN HIGHWAY SYSTEM ALONG THE PAN-PHILIPPINE HIGHWAY (Plaridel, Cabanatuan and San Jose Bypasses)
CABANATUAN BYPASS - CONTRACT PACKAGE I

SCALE : AS SHOWN
FULL SIZE A1

SHEET CONTENTS :
BRIDGE NO. 1 & 2
APPROACH SLAB PLAN AND SECTIONS (ULTIMATE STAGE)

SHEET NO. : B1-07

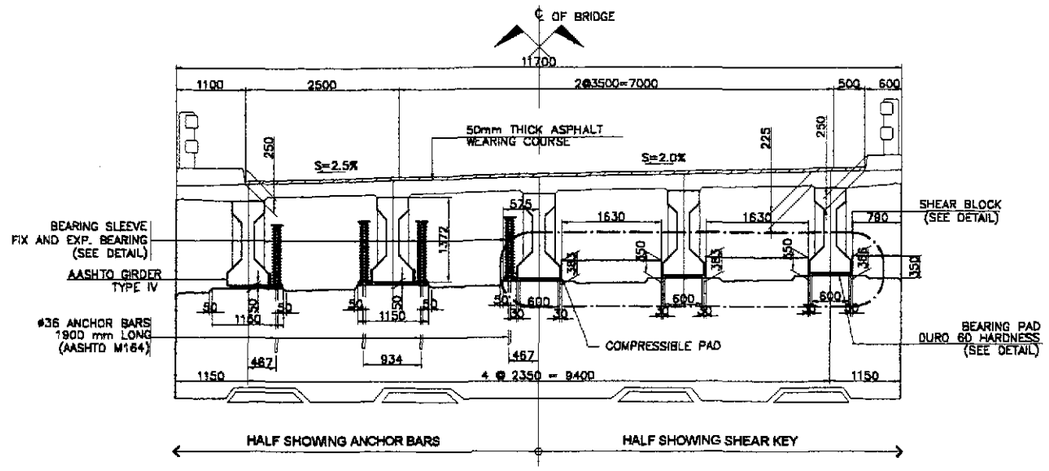

1 SECTION AT ABUTMENT SEAT
SCALE 1:50

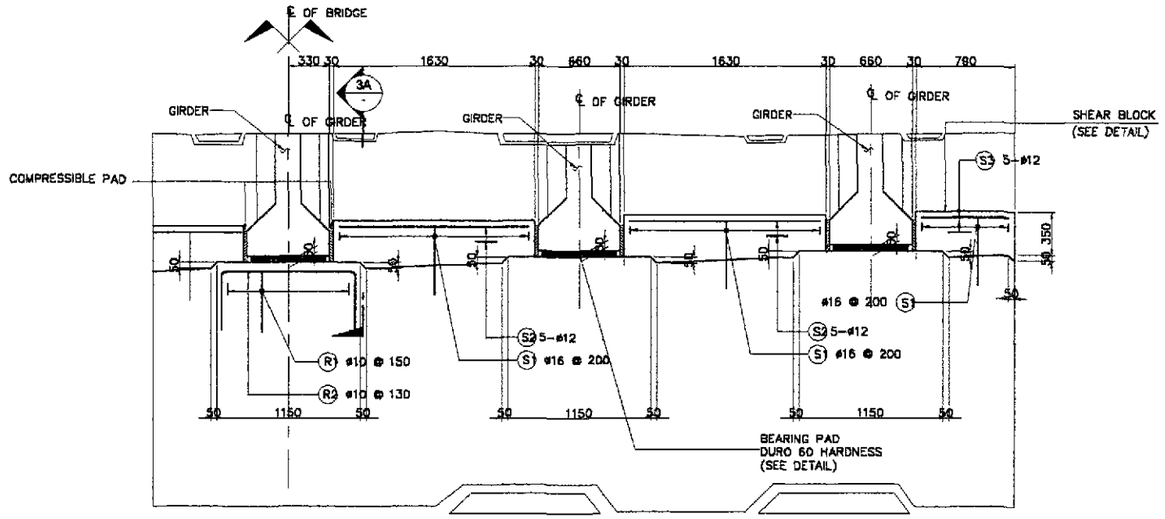

3 SHEAR BLOCK DETAIL
SCALE 1:25

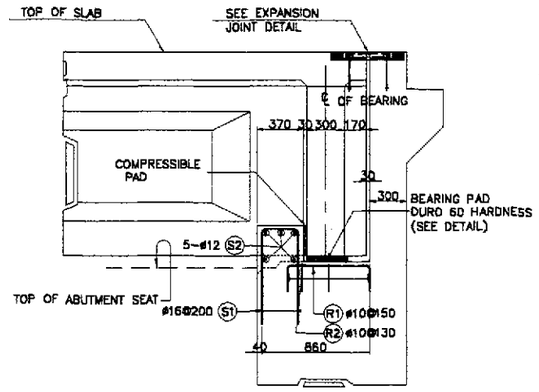

3A SECTION
SCALE 1:25

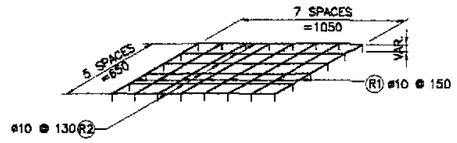

4 RISER REINFORCEMENT
NOT TO SCALE

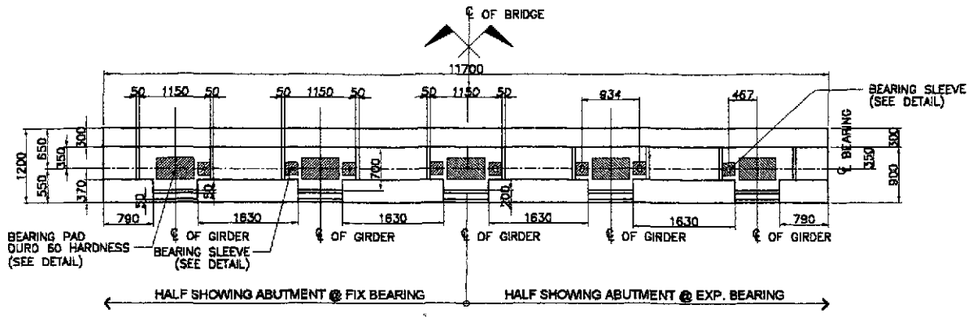

2 PLAN AT ABUTMENT SEAT
SCALE 1:50

BAR BENDING DIAGRAM

(A) a

(B) a b c

SCHEDULE OF REINFORCEMENT

LOCATION	CONCRETE VOLUME (m^3)	BAR MARK	BAR SIZE	QTY.	SPACING	BAR SHAPE	DIMENSION(mm) OUT TO OUT a	b	c	d	e	LENGTH EACH BAR (m)	TOTAL LENGTH (m)	UNIT WEIGHT (kg/m)	WEIGHT (kg)	REBAR RATIO (kg/m^3)
SHEAR KEY & RISER	1.48	S1	16	46	200	(B)	560	290	560			1410	64.86	1.579	103	146.60
		S2	12	20	AS SHOWN	(A)	1550					1550	31.00	0.888	28	
		S3	12	10	AS SHOWN	(A)	710					710	7.10	0.888	7	
		R1	10	40	150	(B)	500	650	500			1650	66.00	0.616	41	
		R2	10	30	130	(B)	500	1050	500			2050	61.50	0.616	38	
TOTAL	1.48	GRADE 40 TOTAL = 217 kgs.														

THE REINFORCEMENT SHOWN ON THIS TABLE IS FOR REFERENCE ONLY. THE CONTRACTOR SHOULD CHECK AND VERIFY ALL DIMENSIONS, SIZES AND QUANTITIES OF REINFORCEMENT.

JICA
JAPAN INTERNATIONAL COOPERATION AGENCY
KEI KATAHIRA & ENGINEERS INTERNATIONAL
YEC YACHIYO ENGINEERING CO., LTD.

	DATE	SIGNATURE
DESIGNED	10/15/02	E. N. SALLAN
CHECKED	10/15/02	N. KOBAYASHI
SUBMITTED	10/16/02	M. KIUCHI TEAM LEADER

REPUBLIC OF THE PHILIPPINES
DEPARTMENT OF PUBLIC WORKS AND HIGHWAYS

PJHL - PMO	BUREAU OF DESIGN		OFFICE OF THE SECRETARY	
Submitted By:	Reviewed By:	Recommended By:	Recommended By: (See cover sheet for Signature)	Approved By: (See cover sheet for Signature/Approval)
DANILO C. TRAJANO Project Director	ADRIANO M. DOROY Chief, Bridges Division	GILBERTO S. REYES Director IV (OIC)	MANUEL M. BONGAN Undersecretary	SIMEON A. DATUMANONG Secretary

PROJECT AND LOCATION :
THE DETAILED DESIGN STUDY ON UPGRADING INTER-URBAN HIGHWAY SYSTEM ALONG THE PAN-PHILIPPINE HIGHWAY (Pariñel, Cabanatuan and San Jose Bypasses)
CABANATUAN BYPASS - CONTRACT PACKAGE I

SCALE : AS SHOWN
FULL SIZE A1

SHEET CONTENTS :
BRIDGE NO. 1 & 2
SHEAR KEY AND RISER DETAILS AT ABUTMENT (ULTIMATE STAGE)

SHEET NO. : B1-08

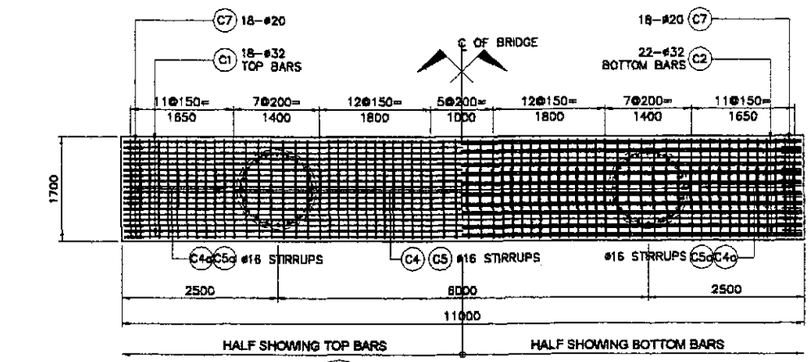

1 COPING PLAN
SCALE 1:50

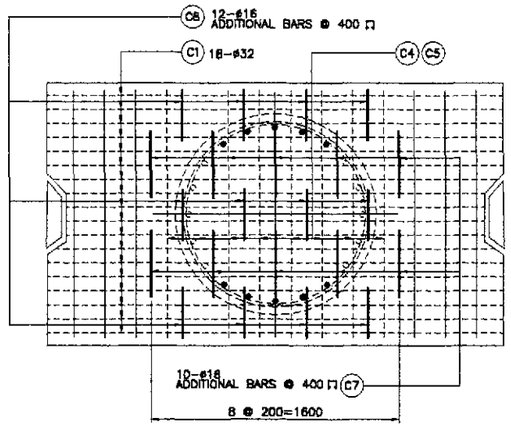

8 DETAIL OF ADDITIONAL REINFORCEMENT @ PIER
SCALE 1:20

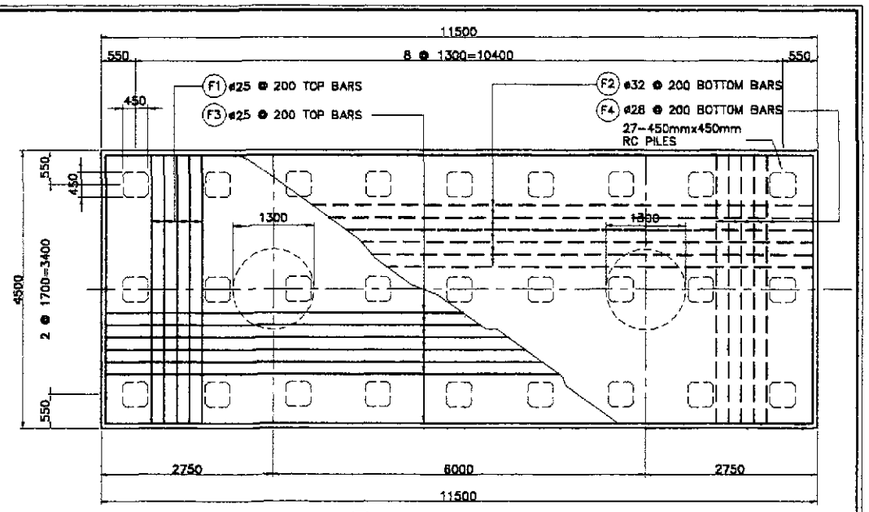

9 FOOTING PLAN
SCALE 1:50

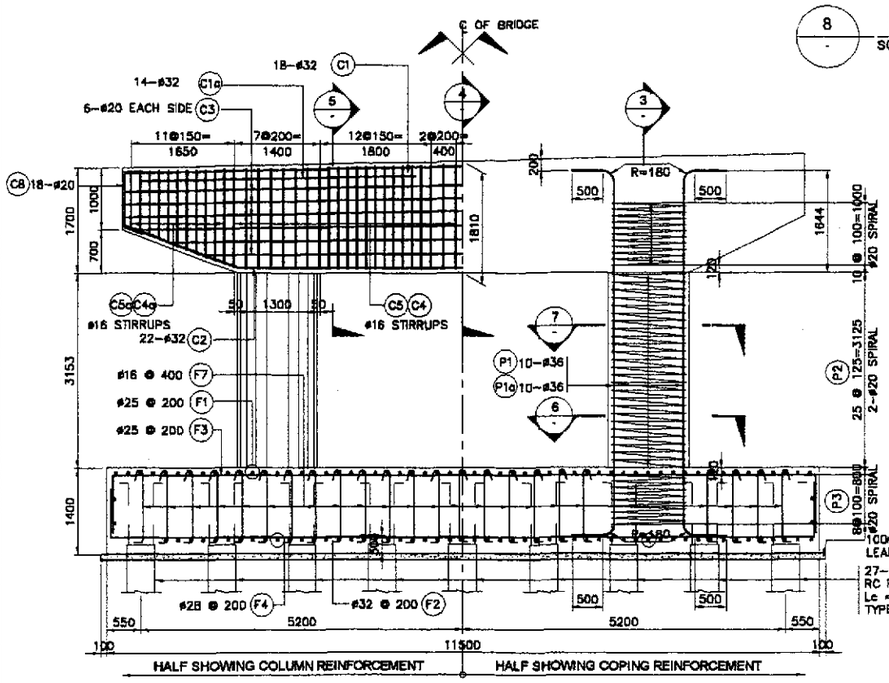

2 ELEVATION
SCALE 1:50

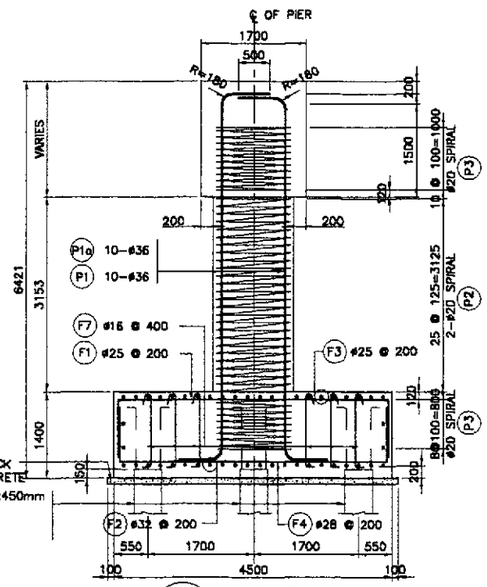

3 SECTION
SCALE 1:50

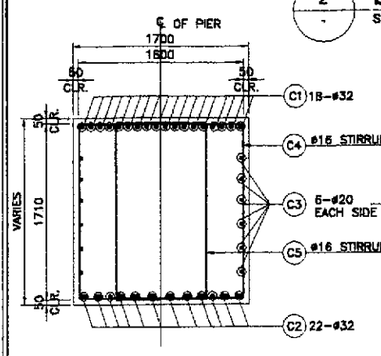

4 SECTION
SCALE 1:30

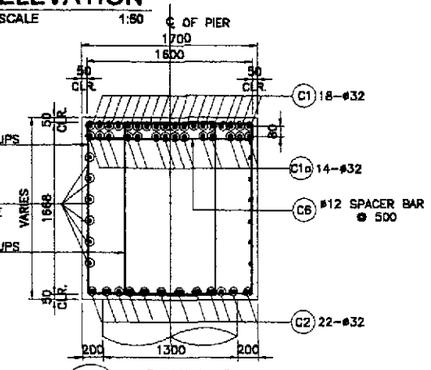

5 SECTION
SCALE 1:30

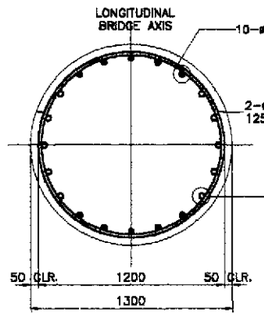

6 SECTION
SCALE 1:20

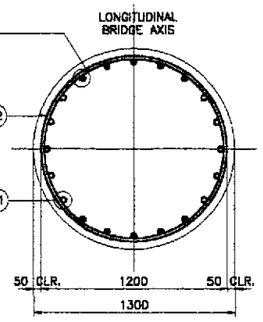

7 SECTION
SCALE 1:20

BAR BENDING DIAGRAM

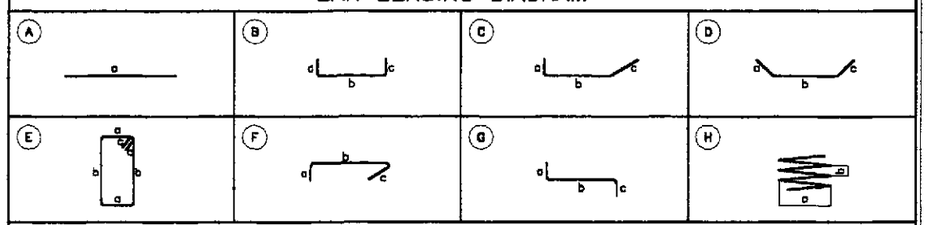

SCHEDULE OF REINFORCEMENT FOR ONE PIER

LOCATION	CONCRETE VOLUME (m^3)	BAR MARK	BAR SIZE	QTY.	SPACING	BAR SHAPE	DIMENSIONS (mm) CUT TO CUT a	b	c	d	LENGTH EACH BAR (mm)	TOTAL LENGTH (m)	UNIT WT. (kg/m)	TOTAL WEIGHT (kg)	REBAR RATIO (kg/m^3)
COPING	31.29	C1	32	18	AS SHOWN	A	10900	–	–	–	10900	196.20	6.313	1239	175.89
		C1a	32	28	AS SHOWN	A	4500	–	–	–	4500	126.00	6.313	796	
		C2	32	22	AS SHOWN	D	2000	7200	2000	–	11200	246.40	6.313	1556	
		C3	20	6	AS SHOWN	A	10900	–	–	–	10900	65.40	2.466	162	
		C3a	20	6	AS SHOWN	A	9500	–	–	–	9500	57.00	2.466	141	
		C4	16	44	150	E	1600	1725	150	–	6950	305.80	1.579	483	
		C4a	16	104	150	E	1600	1425	150	–	6350	139.70	1.579	221	
		C5	16	44	150	E	900	1725	150	–	5550	244.20	1.579	386	
		C5a	16	22	150	E	900	1425	150	–	4950	108.90	1.579	172	
		C6	12	20	150	B	150	1600	150	–	1900	38.00	0.888	34	
		C7	20	36	AS SHOWN	C	350	900	300	–	1600	57.60	2.466	143	
		C8a	16	24	150	B	330	1700	330	–	2360	56.64	1.579	90	
		C8b	16	20	150	B	430	1700	430	–	2560	51.20	1.579	81	
COLUMN	8.37	P1	36	20	AS SHOWN	B	600	5750	600	–	6950	139.00	7.991	1111	416.60
		P1a	36	20	AS SHOWN	G	600	5750	600	–	6950	139.00	7.991	1111	
		P2	20	100	125	H	1200	125	–	–	3770	376.99	2.466	930	
		P3	20	36	100	H	1200	100	–	–	3770	135.72	2.466	335	
FOOTING	72.45	F1	25	58	200	B	925	4350	925	–	6200	359.60	3.854	1386	98.05
		F2	32	58	200	B	925	4350	925	–	6200	359.60	6.313	2271	
		F3	25	23	200	B	925	11350	925	–	13200	303.60	3.854	1171	
		F4	28	23	200	B	925	11350	925	–	13200	303.60	4.833	1468	
		F5	16	4	AS SHOWN	A	11350	–	–	–	11350	45.40	1.579	72	
		F6	16	4	AS SHOWN	A	4350	–	–	–	4350	17.40	1.579	28	
		F7	16	280	400	F	200	1250	150	–	1600	448.00	1.579	708	
TOTAL	112.11											GRADE 40 TOTAL = 2,275 kgs. GRADE 60 TOTAL = 13,820 kgs.			

JICA
JAPAN INTERNATIONAL COOPERATION AGENCY

KEI KATAHIRA & ENGINEERS INTERNATIONAL
YEO YACHIYO ENGINEERING CO., LTD.

	DATE	SIGNATURE
DESIGNED	10/15/02	A. P. GONZALES
CHECKED	10/15/02	M. KOBAYASHI
SUBMITTED	10/16/02	M. KOBAYASHI TEAM LEADER

REPUBLIC OF THE PHILIPPINES
DEPARTMENT OF PUBLIC WORKS AND HIGHWAYS

PJHL – PMO	BUREAU OF DESIGN		OFFICE OF THE SECRETARY	
Submitted By:	Reviewed By:	Recommended By:	Recommended By: (See cover sheet for Signature)	Approved By: (See cover sheet for Signature/Approval)
DANILO C. TRAJANO	ADRIANO M. DOROY	GILBERTO S. REYES	MANUEL M. BONDAN	SIMEON A. DATUMANONG
Project Director	Chief, Bridge Division	Director IV (OIC)	Undersecretary	Secretary

PROJECT AND LOCATION :
THE DETAILED DESIGN STUDY ON UPGRADING INTER-URBAN HIGHWAY SYSTEM ALONG THE PAN-PHILIPPINE HIGHWAY (Pitaridel, Cabanatuan and San Jose Bypasses)
CABANATUAN BYPASS - CONTRACT PACKAGE I

SCALE :
AS SHOWN
FULL SIZE A1

SHEET CONTENTS :
BRIDGE NO. 1
PIER P1
BAR ARRANGEMENT
(ULTIMATE STAGE)

SHEET NO. :
B1-09

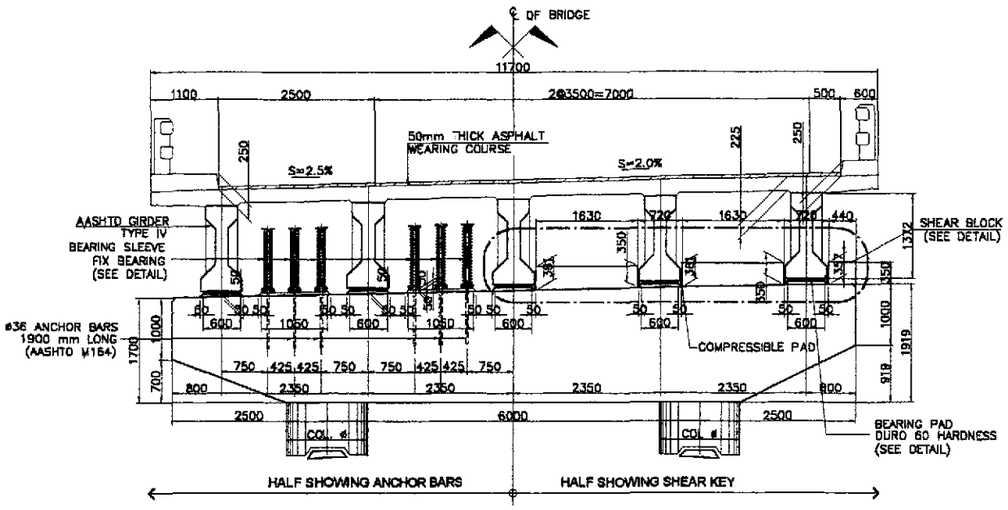

1 SECTION AT PIER
SCALE 1:50

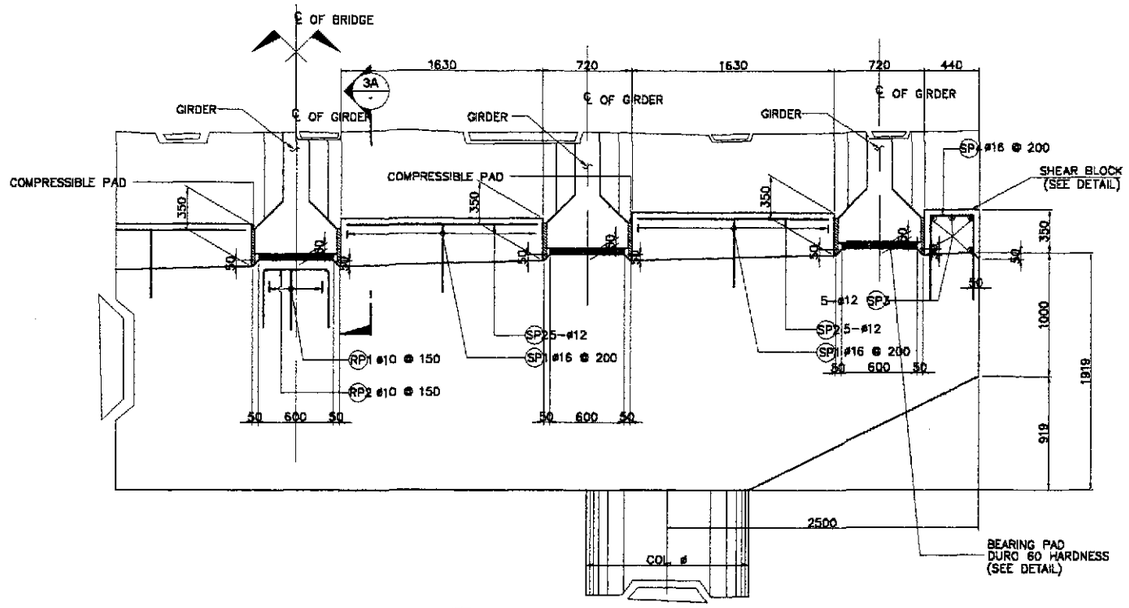

3 SHEAR BLOCK DETAIL AT PIER
SCALE 1:25

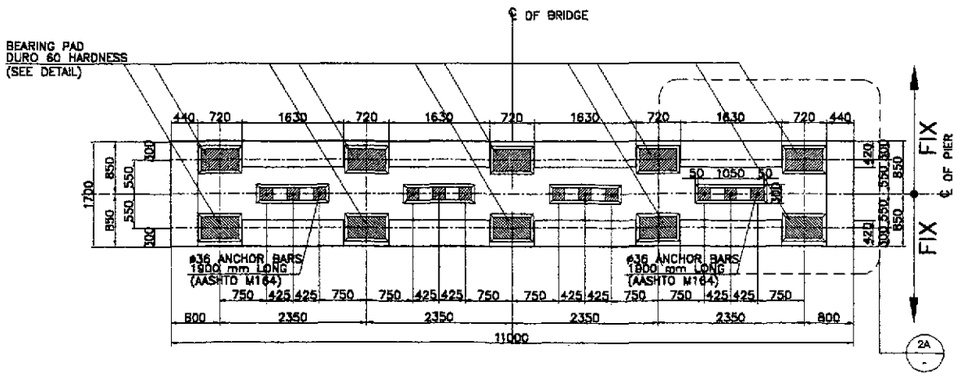

2 PLAN AT PIER
SCALE 1:50

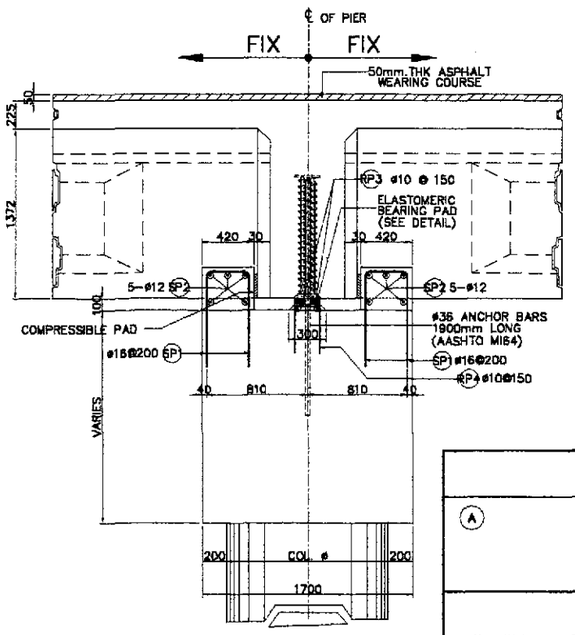

3A SECTION
SCALE 1:25

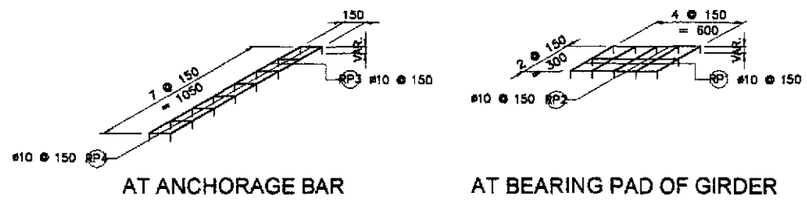

AT ANCHORAGE BAR

AT BEARING PAD OF GIRDER

4 RISER REINFORCEMENT
NOT TO SCALE

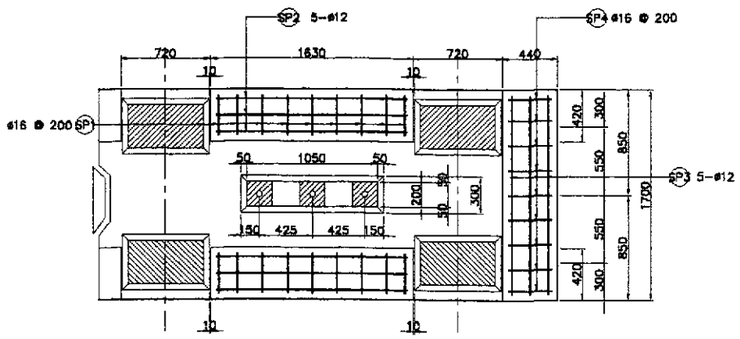

2A DETAIL
SCALE 1:25

PIER SCHEDULE	
LOCATION	COL. ø (mm)
BRIDGE 1	1300
BRIDGE 2	1400

BAR BENDING DIAGRAM

(A) a

(B) a b c

SCHEDULE OF REINFORCEMENT (FOR ONE PIER ONLY)

LOCATION	CONCRETE VOLUME (m^3)	BAR MARK	BAR SIZE	QTY.	SPACING	BAR SHAPE	DIMENSION(mm) OUT TO OUT a	b	c	d	e	LENGTH EACH BAR (m)	TOTAL LENGTH (m)	UNIT WEIGHT (kg/m)	WEIGHT (kg)	REBAR RATIO (kg/m^3)
SHEAR KEY & RISER	2.65	SP1	16	72	200	B	560	340	560			1460	105.12	1.579	166	146.82
		SP2	12	40	AS SHOWN	A	1550					1550	62.00	0.888	56	
		SP3	12	10	AS SHOWN	A	1620					1620	16.20	0.888	15	
		SP4	16	18	200	B	560	380	560			1480	26.64	1.579	43	
		RP1	10	50	150	B	500	600	500			1600	80.00	0.616	50	
		RP2	10	30	150	B	500	300	500			1300	39.00	0.616	25	
		RP3	10	8	150	B	500	1050	500			2050	16.40	0.616	11	
		RP4	10	32	150	B	500	150	500			1150	36.80	0.616	23	
TOTAL	2.65														GRADE 40 TOTAL = 389 kgs.	

THE REINFORCEMENT SHOWN ON THIS TABLE IS FOR REFERENCE ONLY. THE CONTRACTOR SHOULD CHECK AND VERIFY ALL DIMENSIONS, SIZES AND QUANTITIES OF REINFORCEMENT.

JICA
JAPAN INTERNATIONAL COOPERATION AGENCY
KEI KATAHIRA & ENGINEERS INTERNATIONAL
YCO YACHIYO ENGINEERING CO., LTD.

	DATE	SIGNATURE
DESIGNED	10/5/02	E. N. SALLAN
CHECKED	10/15/02	[illegible]
SUBMITTED	10/16/02	N. KIKUCHI TEAM LEADER

REPUBLIC OF THE PHILIPPINES
DEPARTMENT OF PUBLIC WORKS AND HIGHWAYS

PJHL - PMO	BUREAU OF DESIGN		OFFICE OF THE SECRETARY	
Submitted By:	Reviewed By:	Recommended By:	Recommended By: (See cover sheet for Signature)	Approved By: (See cover sheet for Signature/Approval)
DANILO C. TRAJANO Project Director	ADRIANO M. DOROY Chief, Bridges Division	GILBERTO S. REYES Director IV (OIC)	MANUEL M. BONOAN Undersecretary	SIMEON A. DATUMANONG Secretary

PROJECT AND LOCATION :
THE DETAILED DESIGN STUDY ON UPGRADING INTER-URBAN HIGHWAY SYSTEM ALONG THE PAN-PHILIPPINE HIGHWAY (Plaridel, Cabanatuan and San Jose Bypasses)
CABANATUAN BYPASS - CONTRACT PACKAGE I

SCALE : AS SHOWN FULL SIZE A1

SHEET CONTENTS :
BRIDGE NO. 1 & 2
PIER SHEAR KEY AND RISER DETAILS AT PIER (ULTIMATE STAGE)

SHEET NO. : B1-10

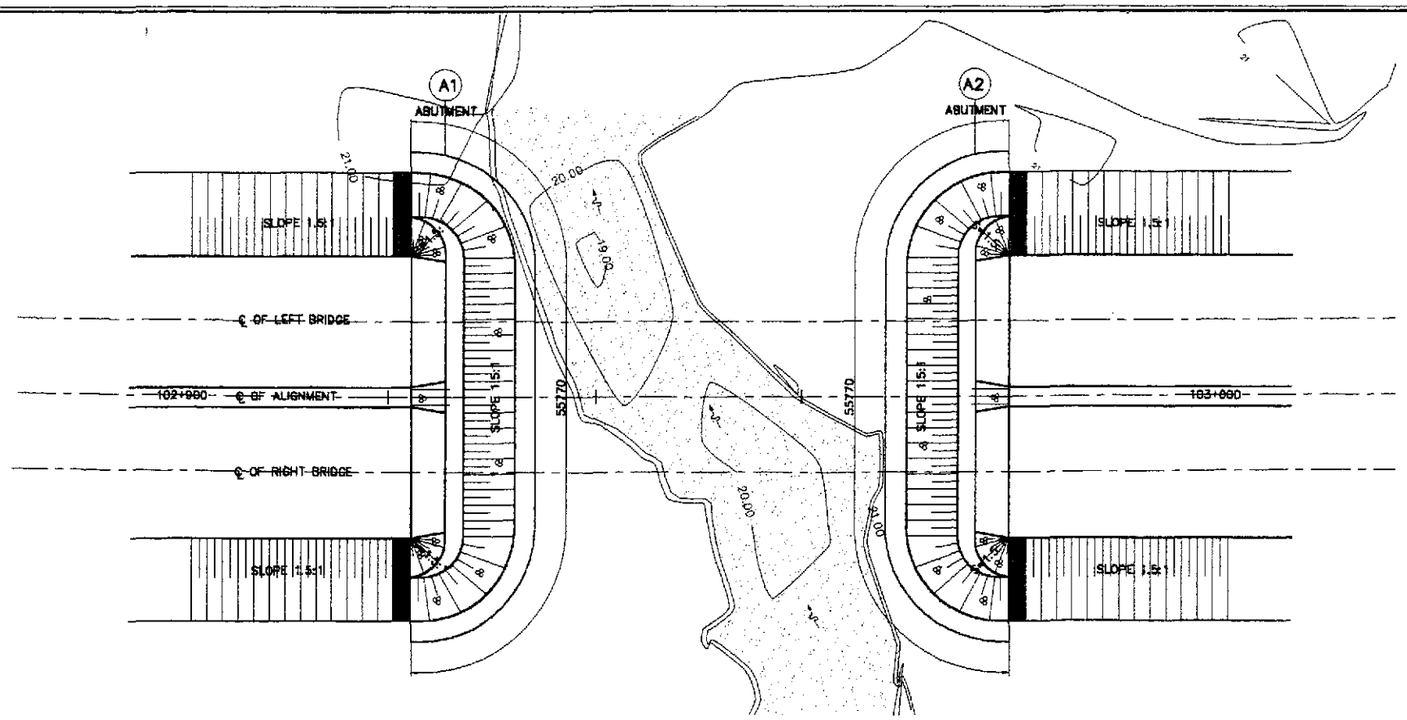

1A PLAN
SCALE 1:300

GENERAL NOTES:

1. GROUTED RIPRAP (250mm–300mmDIA.) SHALL BE USED FOR THE FACING AND SHALL BE CAREFULLY HANDLAID WITH THE LONGEST DIMENSIONS PERPENDICULAR TO THE SLOPE AND FIRMLY BEDDED INTO THE SLOPE AND ADJACENT TO THE ADJOINING BOULDERS SPACED BETWEEN THE BOULDERS. THE SPACE BETWEEN THE BOULDERS SHALL BE COMPLETELY FILLED WITH MORTAR. THE OUTSIDE SURFACE OF THE BOULDERS SHALL BE LEFT EXPOSED AND THE SURFACE OF THE MORTAR SHALL BE SWEPT WITH A STIFF BROOM.
2. GEOTEXTILE
   THE FOLLOWING SPECIFICATIONS ARE REQUIRED:
   1. POLYESTER OR POLYPROPELINE – 100%
   2. MECHANICALLY BONDED/HEAT BONDED
   3. NON–WOVEN
   4. EFFECTIVE OPENING SIZE – 110 MICRONS (MAX.)
   5. THICKNESS UNDER PRESSURE – 0.80mm (MIN.)
   6. WEIGHT – 200g/sq. m. (MIN.)
   7. CBR PUNCTURE STRENGTH – 400N (MIN.)
   8. MULTI–DIRECTIONAL TENSILE STRENGTH – 13KN/m
3. GRAVEL FILTER SHALL BE COARSE AGGREGATES MATERIALS WHICH SATISFY THE REQUIREMENTS FOR ITEM 405, STRUCTURAL CONCRETE, GRADING B OF TABLE 405.1 AS REVISED.
4. FOR THE LOOSE BOULDER APRON, BOULDERS 250–350mmø SHALL BE HAND–LAID, CLOSE TOGETHER AND SHALL BE FIRMLY BEDDED. ALL VOIDS BETWEEN BOULDERS SHALL BEFILLED WITH GRAVEL AND THE JOINTS FILLED WITH TIGHTLY DRIVEN SPALLS.
5. CURTAIN WALLS SHALL BE USED AT BOTH ENDS OF THE LOOSE BOULDER APRON BANK PROTECTION WORKS. BOULDERS SHALL BE CAREFULLY HAND–LAID AND EMBEDDED INTO THE CONCRETE SECTION.
6. NO CONCRETING UNDER WATER SHALL BE PERMITTED.
7. PROVIDE 1.0 m. BERM WHEN HEIGHT (H) IS > 4.0 m.

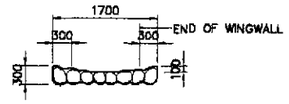

2B SECTION
SCALE 1:50

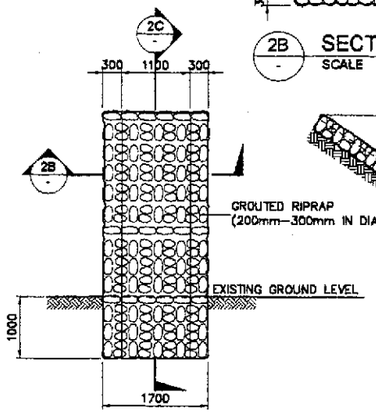

2A ELEVATION
SCALE 1:50

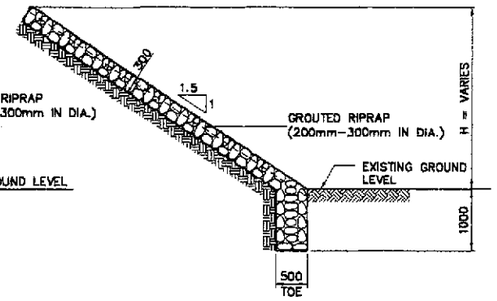

2C SECTION
SCALE 1:50

2 TYPICAL SIDE DRAIN DETAIL
SCALE AS SHOWN

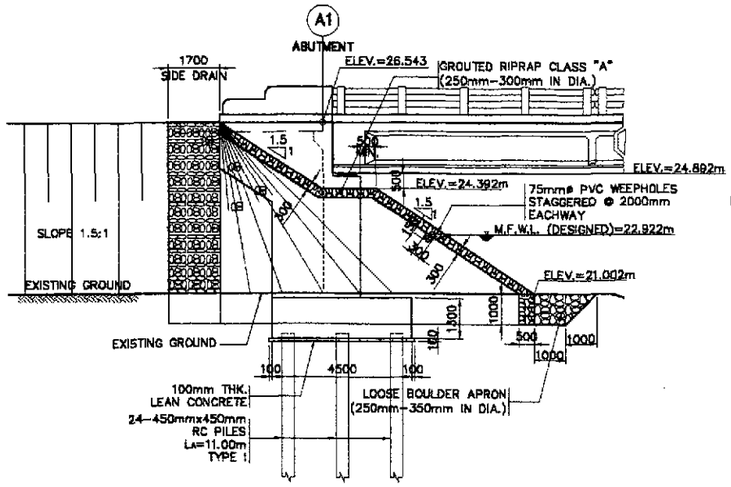

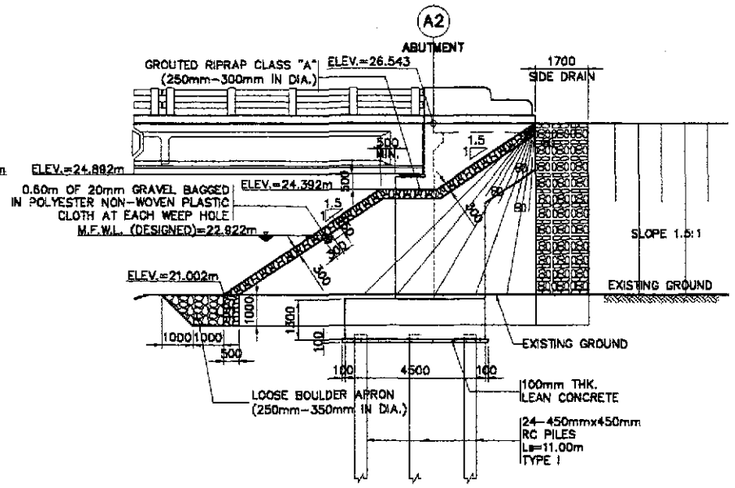

1B ELEVATION
SCALE 1:100

1 ABUTMENT SLOPE PROTECTION
SCALE AS SHOWN

VELOCITY (m/sec)	ROCK SIZE (mm)	
	VERY TURBULENT FLOW	SMOOTH FLOW
1.00	40	–
1.50	135	–
2.00	170	–
2.50	255	137
3.00	370	187
3.50	515	270
4.00	690	350
4.50	825	425
5.00	>900	590

PER ABUTMENT

LOCATION	SIZES	QUANTITY	
		ABUT. A1	ABUT. A2
SIDE DRAIN	200mm–300mm IN DIA.	5.75 cu. m.	5.75 cu. m.
GROUTED RIPRAP	250mm–300mm IN DIA.	76.67 cu. m.	74.99 cu. m.
BOULDER APRON	250mm–350mm IN DIA.	43.49 cu. m.	43.26 cu. m.

JICA
JAPAN INTERNATIONAL COOPERATION AGENCY
KEI KATAHIRA & ENGINEERS INTERNATIONAL
YOO YACHIYO ENGINEERING CO., LTD.

	DATE	SIGNATURE
DESIGNED	10/15/02	A. P. GONZALES
CHECKED	10/15/02	K. KOBAYASHI
SUBMITTED	10/16/02	M. MUCHI TEAM LEADER

REPUBLIC OF THE PHILIPPINES
DEPARTMENT OF PUBLIC WORKS AND HIGHWAYS

PJHL – PMO	BUREAU OF DESIGN		OFFICE OF THE SECRETARY	
Submitted By:	Reviewed By:	Recommended By:	Recommended By: (See cover sheet for Signature)	Approved By: (See cover sheet for Signature/Approval)
DANILO C. TRAJANO	PERFECTO L. ZAPLAN JR.	GILBERTO S. REYES	MANUEL M. BONOAN	SIMEON A. DATUMANONG
Project Director	Chief, Hydraulics Division (OIC)	Director IV (O/C)	Undersecretary	Secretary

PROJECT AND LOCATION :
THE DETAILED DESIGN STUDY ON UPGRADING INTER-URBAN HIGHWAY SYSTEM ALONG THE PAN-PHILIPPINE HIGHWAY (Plaridel, Cabanatuan and San Jose Bypasses)
CABANATUAN BYPASS - CONTRACT PACKAGE I

SCALE : AS SHOWN
FULL SIZE A1

SHEET CONTENTS :
BRIDGE NO. 1
ABUTMENT PROTECTION AND SIDE DRAIN DETAILS (ULTIMATE STAGE)

SHEET NO. : B1-11

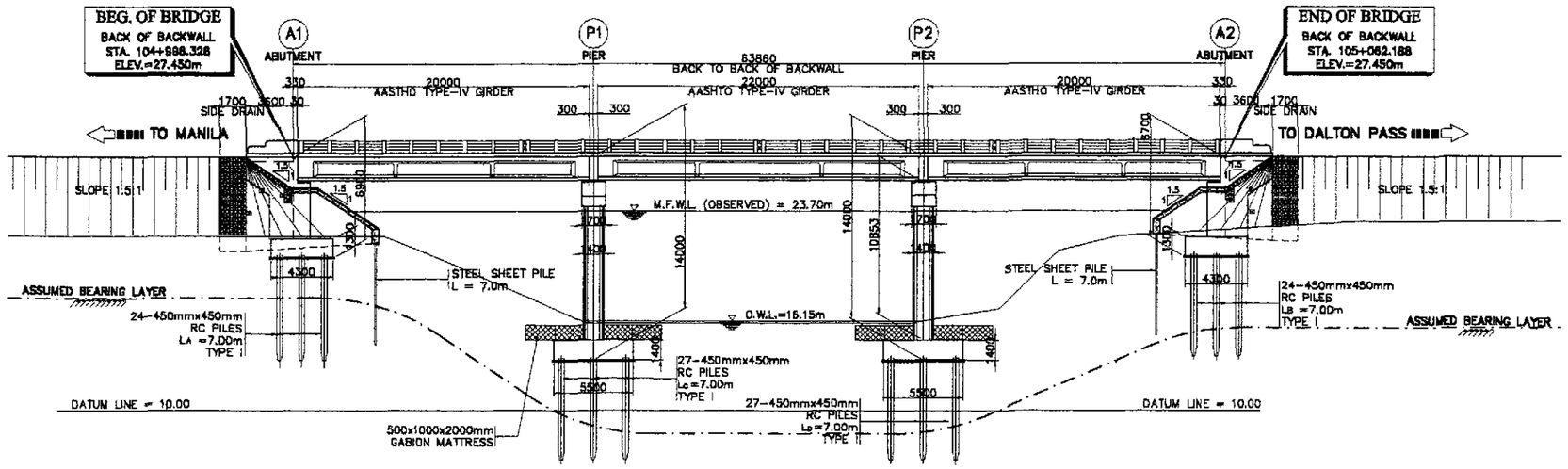

1 GENERAL ELEVATION
SCALE 1:200

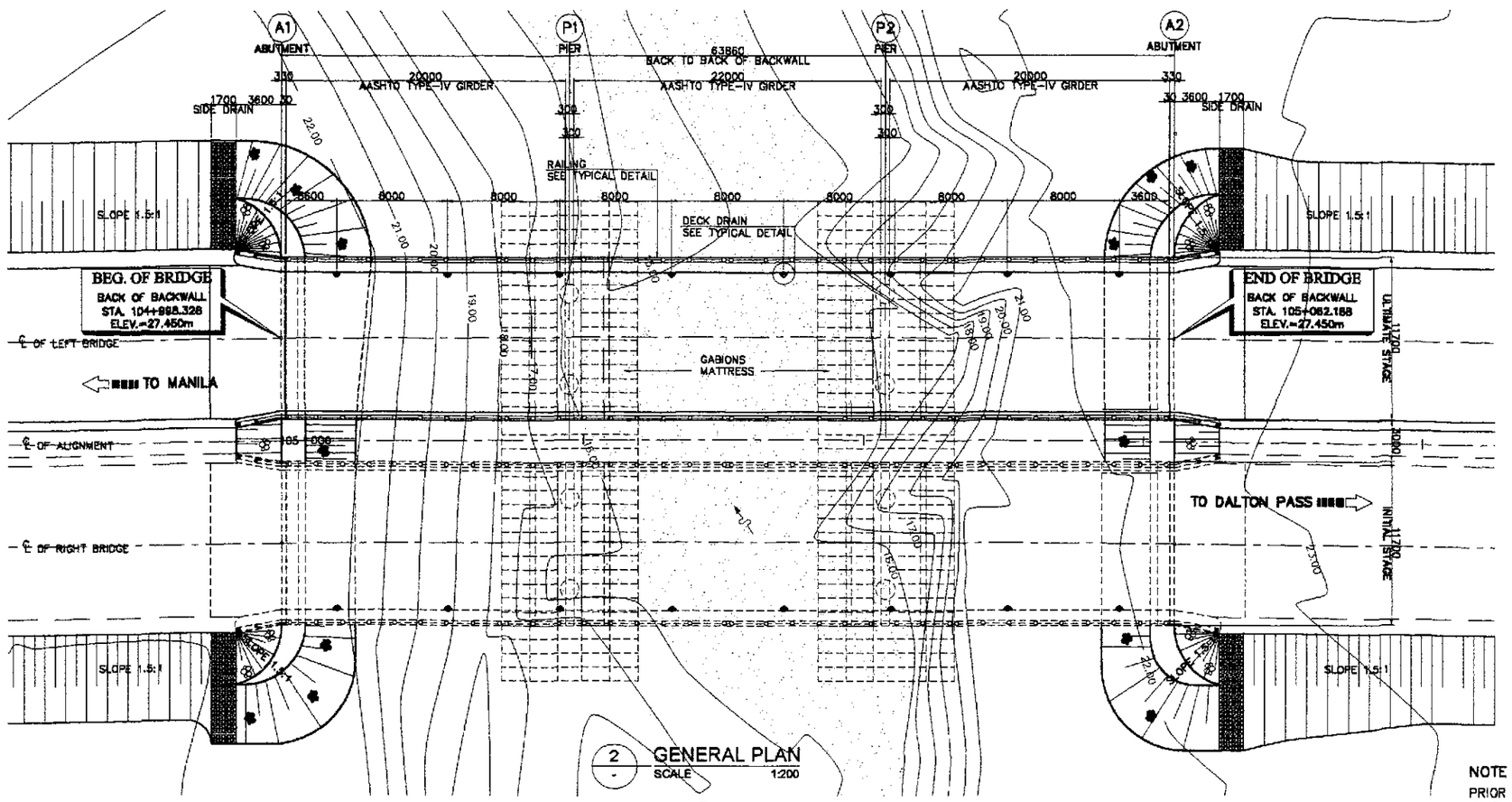

2 GENERAL PLAN
SCALE 1:200

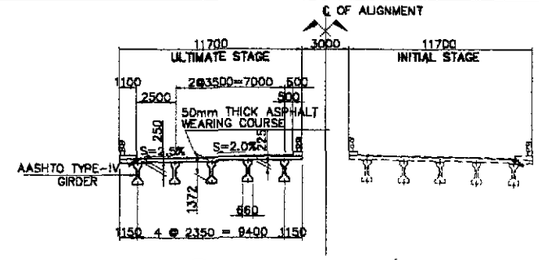

3 SECTION @ MIDSPAN
SCALE 1:200

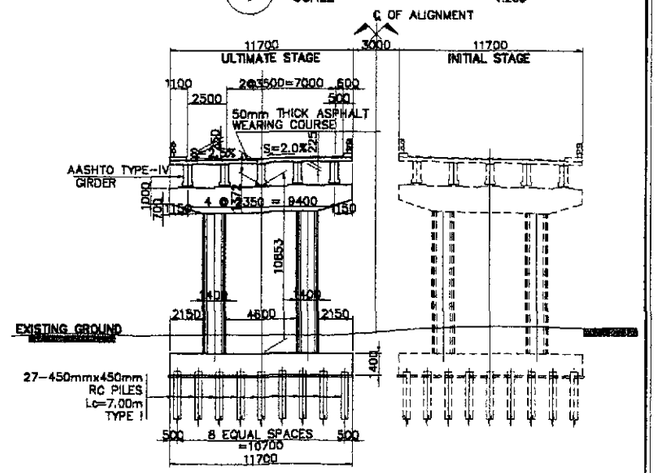

4 SECTION @ PIER P1
SCALE 1:200

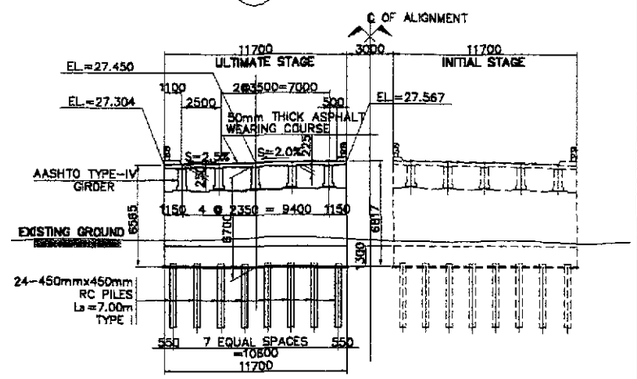

5 SECTION @ ABUTMENT A2
SCALE 1:200

HYDRAULIC DESIGN DATA	
VELOCITY @ 50 YEARS, V_{50}	3.046 m/sec
DISCHARGE @ 50 YEARS, Q_{50}	512.800 cu.m/sec
CATCHMENT AREA, CA	107.760 sq. km

NOTE :

PRIOR TO CONSTRUCTION SOIL INVESTIGATION AT PIER P1 AND ABUTMENT A2 SHALL BE CONDUCTED FOR CONFIRMATION OF ASSUMED BEARING CAPACITY AND FOOTING ELEVATION.

THE PILE LENGTH RECOMMENDED ARE MINIMUM. SHOULD THE SOIL AT THE RECOMMENDED LENGTH BE INADEQUATE BEARING MATERIAL, LENGTH SHALL BE INCREASED. THE MINIMUM EMBEDMENT LENGTH INTO ADEQUATE SOIL FOR 400 x 400 R. C. PILE IS 1000mm WHILE FOR 450 x 450 R. C. PILE IS 1200mm.

A CABANATUAN BYPASS BRIDGE NO.2 (STA.104+998.328)
SCALE AS SHOWN

PERFECTO L. ZAPLAN JR.
OIC Chief, Hydraulics Division, BOD

JICA
JAPAN INTERNATIONAL COOPERATION AGENCY
KEI KATAHIRA & ENGINEERS INTERNATIONAL
YEC YACHIYO ENGINEERING CO., LTD.

	DATE	SIGNATURE
DESIGNED	10/15/02	A. P. GONZALES
CHECKED	10/15/02	M. TOBAYASHI
SUBMITTED	10/16/02	N. KUCHI TEAM LEADER

REPUBLIC OF THE PHILIPPINES
DEPARTMENT OF PUBLIC WORKS AND HIGHWAYS

PJHL – PMO	BUREAU OF DESIGN		OFFICE OF THE SECRETARY	
Submitted By:	Reviewed By:	Recommended By:	Recommended By: (See cover sheet for Signature)	Approved By: (See cover sheet for Signature/Approval)
DANILO C. TRAJANO Project Director	ADRIANO M. DOROY Chief, Bridges Division	GILBERTO S. REYES Director IV (OIC)	MANUEL M. BONOAN Undersecretary	SIMEON A. DATUMANONG Secretary

PROJECT AND LOCATION :
THE DETAILED DESIGN STUDY ON UPGRADING INTER-URBAN HIGHWAY SYSTEM ALONG THE PAN-PHILIPPINE HIGHWAY (Plaridel, Cabanatuan and San Jose Bypasses)
CABANATUAN BYPASS - CONTRACT PACKAGE I

SCALE : 1 : 200 FULL SIZE A1

SHEET CONTENTS :
BRIDGE NO. 2
GENERAL PLAN, ELEVATION AND SECTIONS (ULTIMATE STAGE)

SHEET NO. : B2-01

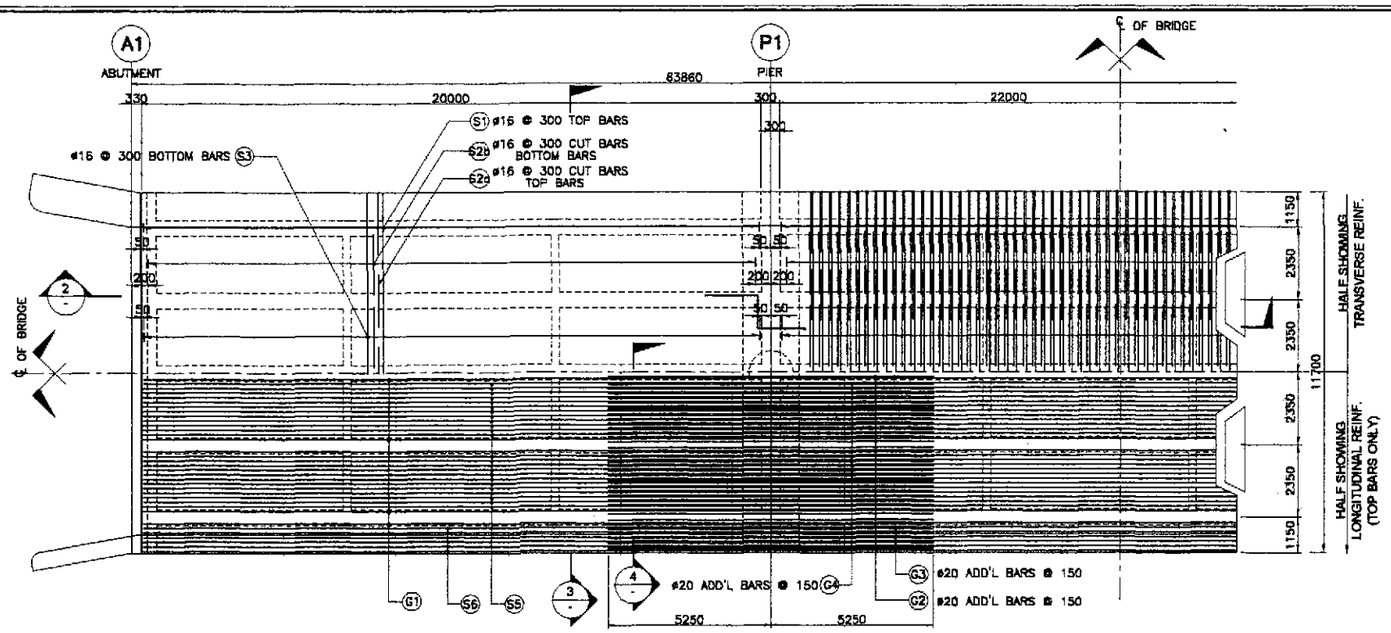

1 FRAMING PLAN
SCALE 1:100

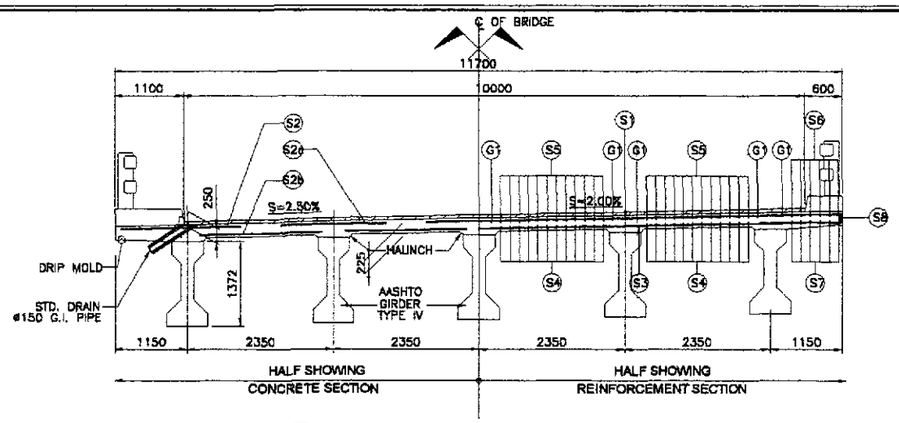

3 TYPICAL CROSS-SECTION
SCALE 1:50

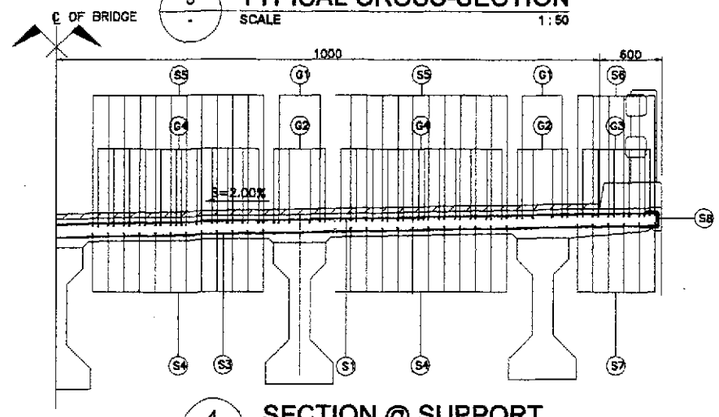

4 SECTION @ SUPPORT
SCALE 1:30

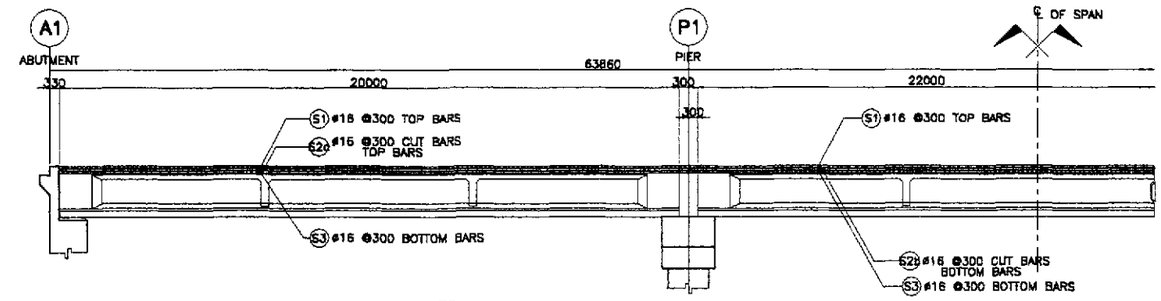

2 LONGITUDINAL SECTION
SCALE 1:100

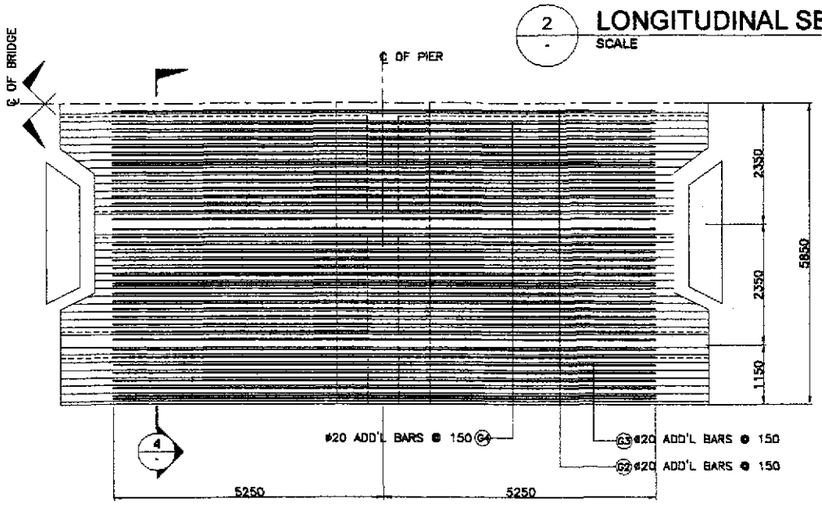

5 REINF. OVER PIER
SCALE 1:80

BAR BENDING DIAGRAM

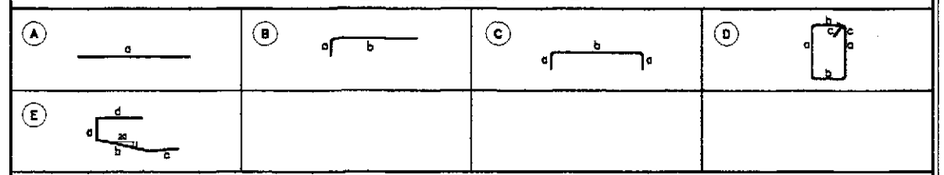

SCHEDULE OF REINFORCEMENT

LOCATION	CONCRETE VOLUME (m^3)	BAR MARK	BAR SIZE	QTY.	SPACING	BAR SHAPE	DIMENSIONS (mm) CUT TO OUT a	b	c	d	LENGTH EACH BAR (mm)	TOTAL LENGTH (m)	UNIT WT. (kg/m)	WEIGHT IN (kg)	REBAR RATIO (kg/m^3)
DECK SLAB	175.02	G1	16	10	AS SHOWN	A	63100	–	–	–	63100	631.00	1.579	997	173.79
		G2	20	40	150	A	10500	–	–	–	10500	420.00	2.466	1036	
		G3	20	12	150	A	10500	–	–	–	10500	126.00	2.466	311	
		G3a	20	48	150	A	7500	–	–	–	7500	504.00	2.466	222	
		G4	20	96	150	A	10500	–	–	–	10500	1008.00	2.466	1243	
		G4a	20	48	150	A	7500	–	–	–	7500	360.00	2.466	888	
		S1	16	208	300	C	145	11600	145	–	11890	2473.12	1.579	3906	
		S2	16	410	300	B	145	2000	–	–	2145	879.45	1.579	1389	
		S2a	16	615	300	A	1700	–	–	–	1700	1045.50	1.579	1651	
		S2b	16	820	300	A	1950	–	–	–	1950	1599.00	1.579	2525	
		S3	16	208	300	A	11600	–	–	–	11600	2412.80	1.579	3810	
		S4	16	48	150	A	63100	–	–	–	63100	3028.80	1.579	4783	
		S5	16	48	150	A	63100	–	–	–	63100	3028.80	1.579	4783	
		S6	16	12	AS SHOWN	A	63100	–	–	–	63100	757.20	1.579	1196	
		S7	16	12	AS SHOWN	A	63100				63100	757.20	1.579	1196	
		S8	12	278	450	E	145	900	600	300	1945	540.71	0.888	481	
TOTAL	175.02													GRADE 40 TOTAL = 28,717 kgs. GRADE 60 TOTAL = 3,700 kgs.	

ESTIMATED QUANTITIES OF SUPERSTRUCTURE

ITEM NO.	DESCRIPTION	UNIT	TOTAL
404(1)a	REINFORCING STEEL GRADE 40	kgs.	46546
	DECK SLAB	26717	
	DIAPHRAGM	1005	
	GIRDER	11630	
	SIDEWALK, RAILING, & POST	5878	
	APPROACH SLAB	1316	
404(1)b	REINFORCING STEEL GRADE 60	kgs.	27437
	DECK SLAB	3700	
	DIAPHRAGM	3406	
	GIRDER	14815	
	SIDEWALK, RAILING, & POST	1328	
	APPROACH SLAB	4188	
405(1)	STRUCTURAL CONCRETE	cu. m.	454.55
	DECK SLAB	175.02	
	DIAPHRAGM	37.88	
	GIRDER	164.67	
	SIDEWALK, RAILING, & POST	41.84	
	APPROACH SLAB	35.14	

JICA
JAPAN INTERNATIONAL COOPERATION AGENCY
KEI KATAHIRA & ENGINEERS INTERNATIONAL
YEO YACHIYO ENGINEERING CO., LTD.

	DATE	SIGNATURE
DESIGNED	10/15/02	E. N. SALLAN
CHECKED	10/15/02	M. KOBAYASHI
SUBMITTED	10/16/02	M. KUCHI TEAM LEADER

REPUBLIC OF THE PHILIPPINES
DEPARTMENT OF PUBLIC WORKS AND HIGHWAYS

PUHL – PMO	BUREAU OF DESIGN		OFFICE OF THE SECRETARY	
Submitted By:	Reviewed By:	Recommended By:	Recommended By: (See cover sheet for Signature)	Approved By: (See cover sheet for Signature/Approval)
DANILO C. TRAJANO	ADRIANO M. DOROY	GILBERTO S. REYES	MANUEL M. BONOAN	SIMEON A. DATUMANONG
Project Director	Chief, Bridges Division	Director IV (OIC)	Undersecretary	Secretary

PROJECT AND LOCATION :
THE DETAILED DESIGN STUDY ON
UPGRADING INTER-URBAN HIGHWAY SYSTEM
ALONG THE PAN-PHILIPPINE HIGHWAY
(Plaridel, Cabanatuan and San Jose Bypasses)
CABANATUAN BYPASS - CONTRACT PACKAGE I

SCALE : AS SHOWN
FULL SIZE A1

SHEET CONTENTS :
BRIDGE NO. 2
DECK FRAMING PLAN
AND SECTIONS
(ULTIMATE STAGE)

SHEET NO. : B2-02

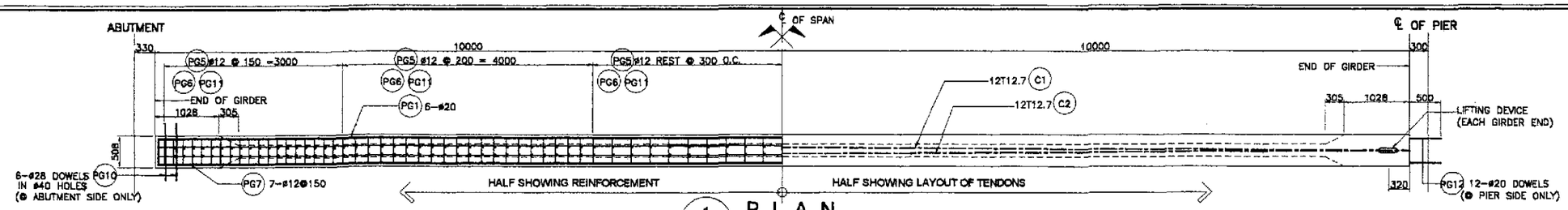

1 PLAN
SCALE 1:40

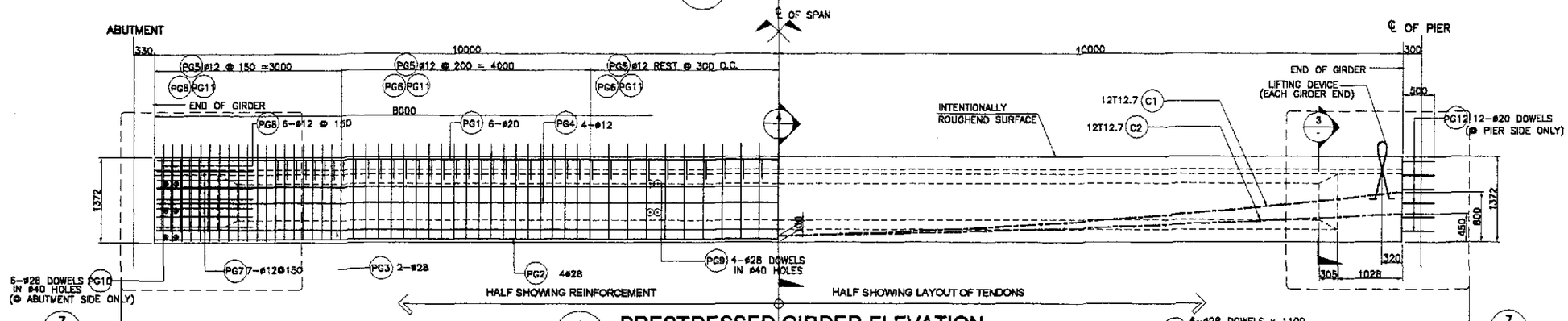

2 PRESTRESSED GIRDER ELEVATION
SCALE 1:40

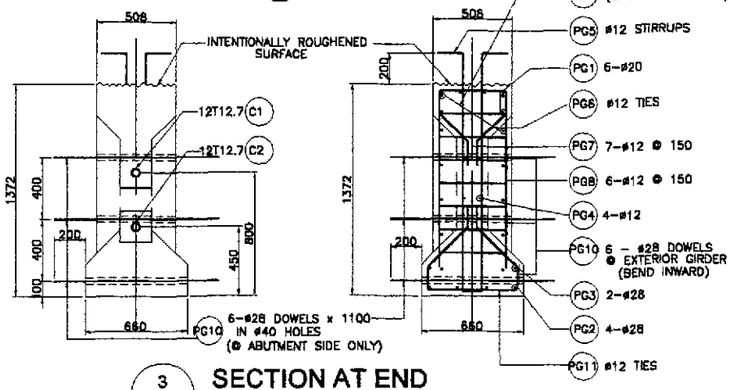

3 SECTION AT END
SCALE 1:20

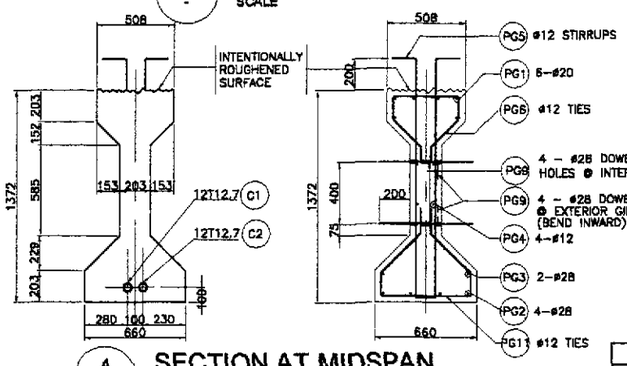

4 SECTION AT MIDSPAN
SCALE 1:20

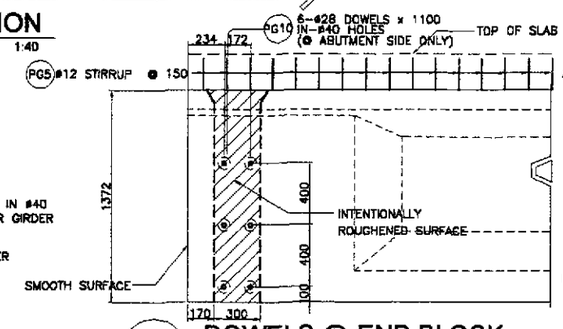

5 DOWELS @ END BLOCK
SCALE 1:20

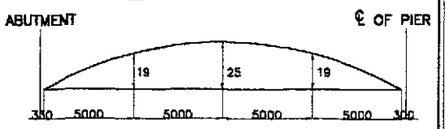

6 CAMBER DIAGRAM
NOT TO SCALE

NOTES :

1.) SEE GENERAL NOTES, -2, FOR GIRDER DESIGN GUIDE.
2.) JACKING FORCE PER GIRDER, P_J = 3304 kN.
3.) JACKING WILL BE DONE AT BOTH ENDS.
4.) FINAL PRESTRESSING FORCE @ MIDSPAN. F_{NET} = 2430 kN

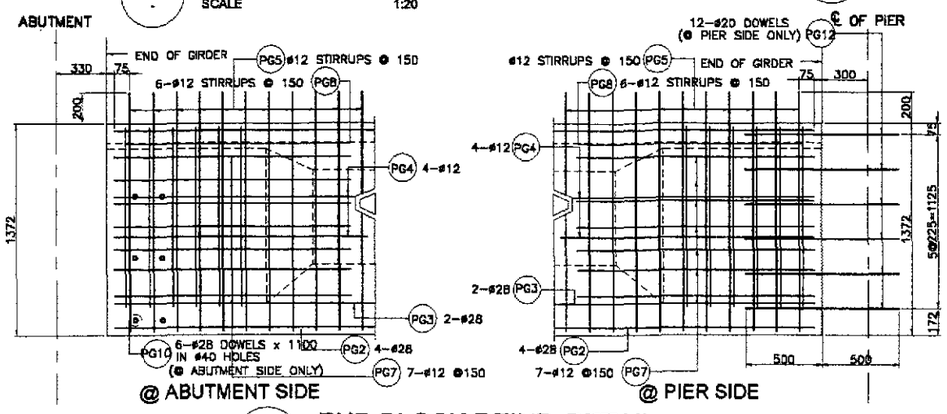

7 END BLOCK REINF. DETAIL
SCALE 1:20

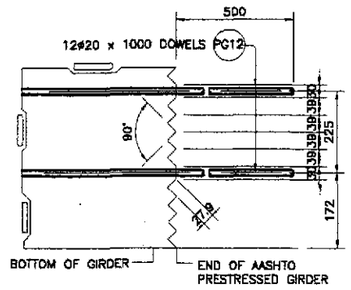

8 TOOTH DETAIL
SCALE N.T.S.

BAR BENDING DIAGRAM

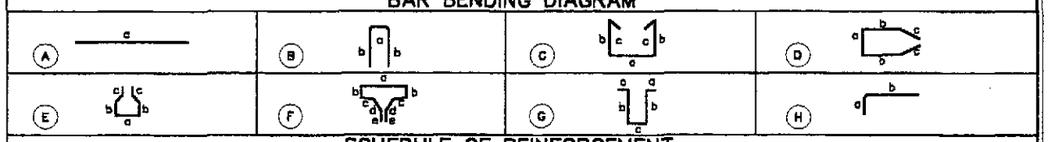

SCHEDULE OF REINFORCEMENT

STRUCTURE COMPONENT	BAR MARK	SIZE (mm)	QTY.	SPACING	BAR SHAPE	DIMENSION(mm) a	b	c	d	e	LENGTH PER BAR (mm)	TOTAL LENGTH (m)	UNIT WEIGHT (kg/m)	TOTAL WEIGHT (kg)	CONC. VOLUME (cu.m)	REBAR RATIO (kg/cu.m)	REMARKS
GIRDER	PG1	20	6	AS SHOWN	A	19920	–	–	–	–	19920	119.52	2.466	295	10.64	161.66	QUANTITIES ARE FOR ONE (1) GIRDER ONLY
	PG2	28	4	AS SHOWN	A	19920	–	–	–	–	19920	79.68	4.833	386			
	PG3	28	2	AS SHOWN	A	19920	–	–	–	–	19920	39.84	4.833	193			
	PG4	12	4	AS SHOWN	A	19920	–	–	–	–	19920	79.68	0.888	71			
	PG5	12	100	150	G	100	1540	103	–	–	3383	338.30	0.888	301			
	PG6	12	100	150	E	430	160	150	250	–	1570	157.00	0.888	140			
	PG7	12	14	150	D	430	1000	550	–	–	3530	49.42	0.888	44			
	PG8	12	12	150	C	430	1230	150	–	–	3190	38.28	0.888	34			
	PG9	28	8	AS SHOWN	A	603	–	–	–	–	603	4.82	4.833	24			
	PG10	28	6	AS SHOWN	A	1060	–	–	–	–	1060	6.36	4.833	31			
	PG11	12	100	150	E	580	160	150	360	–	1920	192.00	0.888	171			
	PG12	20	12	AS SHOWN	A	1000	–	–	–	–	1000	12.00	2.466	30			

GRADE 40 TOTAL = 781 kgs.
GRADE 60 TOTAL = 959 kgs.

JICA
JAPAN INTERNATIONAL COOPERATION AGENCY
KEI KATAHIRA & ENGINEERS INTERNATIONAL
YEO YACHIYO ENGINEERING CO., LTD.

	DATE	SIGNATURE
DESIGNED	10/5/02	E. N. SALLAN
CHECKED	10/15/02	M. NOGUCHI
SUBMITTED	10/16/02	M. NOGUCHI TEAM LEADER

REPUBLIC OF THE PHILIPPINES
DEPARTMENT OF PUBLIC WORKS AND HIGHWAYS

PJHL - PMO	BUREAU OF DESIGN		OFFICE OF THE SECRETARY	
Submitted By:	Reviewed By:	Recommended By:	Recommended By: (See cover sheet for Signature)	Approved By: (See cover sheet for Signature/Approval)
DANILO C. TRAJANO	ADRIANO M. DOROY	GILBERTO S. REYES	MANUEL M. BONDAN	SIMEON A. DATUMANONG
Project Director	Chief, Bridges Division	Director IV (OIC)	Undersecretary	Secretary

PROJECT AND LOCATION :
THE DETAILED DESIGN STUDY ON UPGRADING INTER-URBAN HIGHWAY SYSTEM ALONG THE PAN-PHILIPPINE HIGHWAY (Plaridel, Cabanatuan and San Jose Bypasses)
CABANATUAN BYPASS - CONTRACT PACKAGE I

SCALE : AS SHOWN
FULL SIZE A1

SHEET CONTENTS :
BRIDGE NO. 2
AASHTO TYPE IV GIRDER (EXTERIOR SPAN) (ULTIMATE STAGE)

SHEET NO. : B2-03

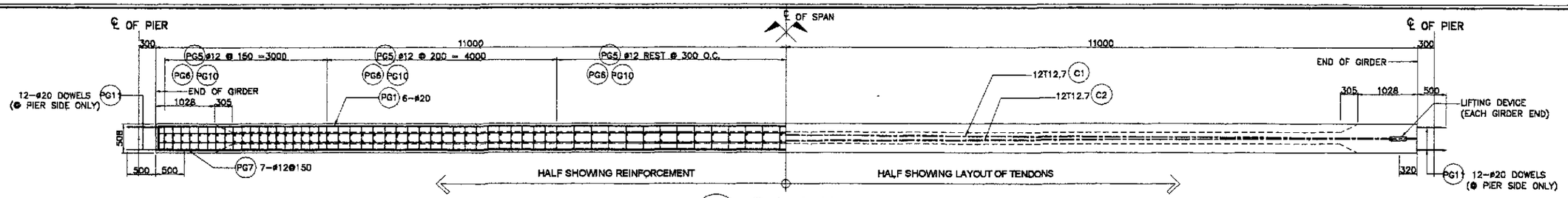

1 PLAN
SCALE 1:40

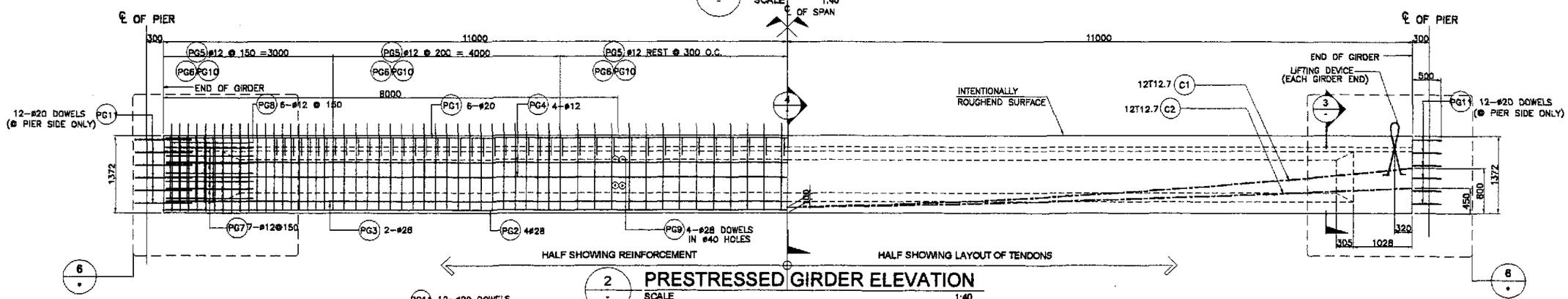

2 PRESTRESSED GIRDER ELEVATION
SCALE 1:40

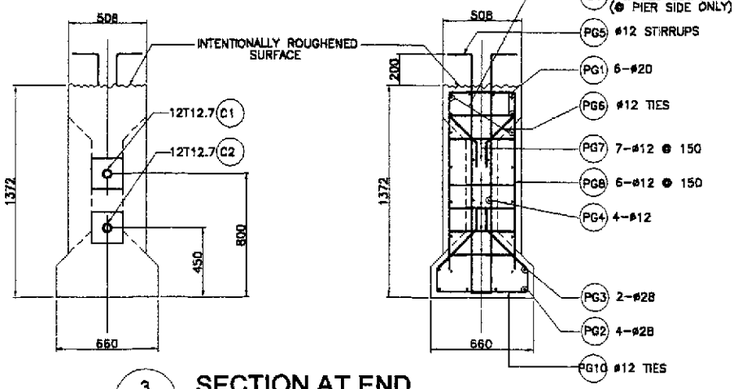

3 SECTION AT END
SCALE 1:20

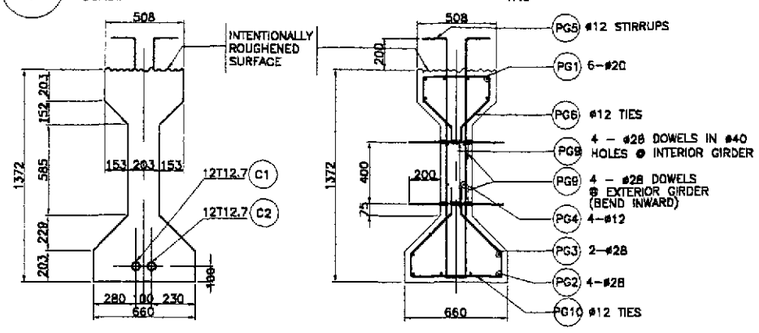

4 SECTION AT MIDSPAN
SCALE 1:20

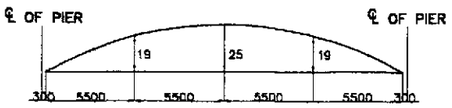

5 CAMBER DIAGRAM
NOT TO SCALE

NOTES ;

1.) SEE GENERAL NOTES. -2, FOR GIRDER DESIGN GUIDE.
2.) JACKING FORCE PER GIRDER, PJ = 3304 kN.
3.) JACKING WILL BE DONE AT BOTH ENDS.
4.) FINAL PRESTRESSING FORCE @ MIDSPAN, F_{NET} = 2461 kN

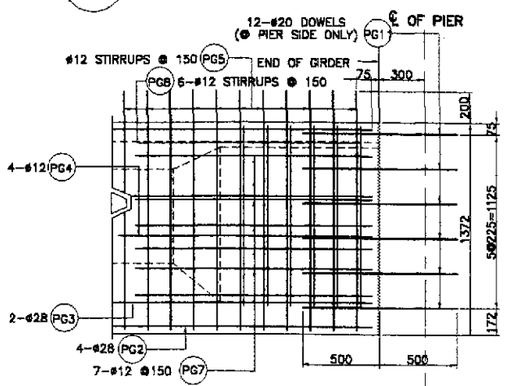

6 END BLOCK REINF. DETAIL @ PIER SIDE
SCALE 1:20

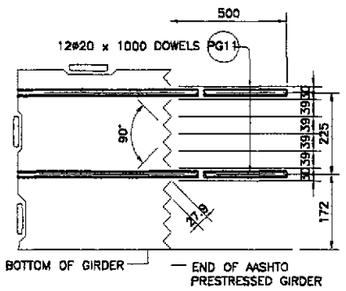

7 TOOTH DETAIL
SCALE N.T.S.

BAR BENDING DIAGRAM

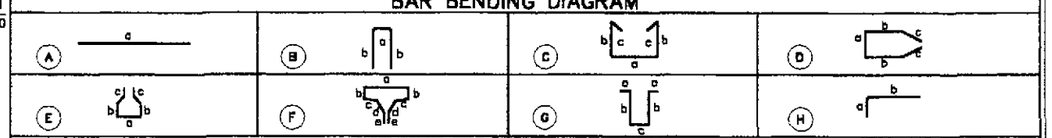

SCHEDULE OF REINFORCEMENT

STRUCTURE COMPONENT	BAR MARK	SIZE (mm)	QTY.	SPACING	BAR SHAPE	DIMENSION(mm) a	b	c	d	e	LENGTH PER BAR (mm)	TOTAL LENGTH (m)	UNIT WEIGHT (kg/m)	TOTAL WEIGHT (kg)	CONC. VOLUME (cu.m)	REBAR RATIO (kg/cu.m)	REMARKS
GIRDER	PG1	20	6	AS SHOWN	A	21920	–	–	–	–	21920	131.52	2.466	325	11.66	158.58	QUANTITIES ARE FOR ONE (1) GIRDER ONLY
	PG2	28	4	AS SHOWN	A	21920	–	–	–	–	21920	87.68	4.833	424			
	PG3	28	2	AS SHOWN	A	21920	–	–	–	–	21920	43.84	4.833	212			
	PG4	12	4	AS SHOWN	A	21920	–	–	–	–	21920	87.68	0.888	78			
	PG5	12	106	150	G	100	1540	103	–	–	3383	358.60	0.888	319			
	PG6	12	106	150	E	430	160	150	260	–	1570	166.42	0.888	148			
	PG7	12	14	150	D	430	1000	550	–	–	3530	49.42	0.888	44			
	PG8	12	12	150	C	430	1230	150	–	–	3190	38.28	0.888	34			
	PG9	28	6	AS SHOWN	A	603	–	–	–	–	603	4.82	4.833	24			
	PG10	12	106	150	E	580	160	150	360	–	1920	203.52	0.888	181			
	PG11	20	24	AS SHOWN	A	1000	–	–	–	–	1000	24.00	2.466	60			

GRADE 40 TOTAL = 804 kgs.
GRADE 60 TOTAL = 1,045 kgs.

JICA
JAPAN INTERNATIONAL COOPERATION AGENCY
KEI KATAHIRA & ENGINEERS INTERNATIONAL
YEO YACHIYO ENGINEERING CO., LTD.

	DATE	SIGNATURE
DESIGNED	10/5/02	E. N. SALLAN
CHECKED	10/15/02	M. KOBAYASHI
SUBMITTED	10/16/02	M. KUCHI TEAM LEADER

REPUBLIC OF THE PHILIPPINES
DEPARTMENT OF PUBLIC WORKS AND HIGHWAYS

PJHL – PMO	BUREAU OF DESIGN		OFFICE OF THE SECRETARY	
Submitted By:	Reviewed By:	Recommended By:	Recommended By: (See cover sheet for Signature)	Approved By: (See cover sheet for Signature/Approval)
DANILO C. TRAJANO	ADRIANO M. DOROY	GILBERTO S. REYES	MANUEL M. BONDAN	SIMEON A. DATUMANONG
Project Director	Chief, Bridges Division	Director IV (OIC)	Undersecretary	Secretary

PROJECT AND LOCATION :
THE DETAILED DESIGN STUDY ON UPGRADING INTER-URBAN HIGHWAY SYSTEM ALONG THE PAN-PHILIPPINE HIGHWAY (Plaridel, Cabanatuan and San Jose Bypasses)
CABANATUAN BYPASS - CONTRACT PACKAGE I

SCALE :
AS SHOWN
FULL SIZE A1

SHEET CONTENTS :
BRIDGE NO. 2
AASHTO TYPE IV GIRDER
(INTERIOR SPAN)
(ULTIMATE STAGE)

SHEET NO. :
B2-04

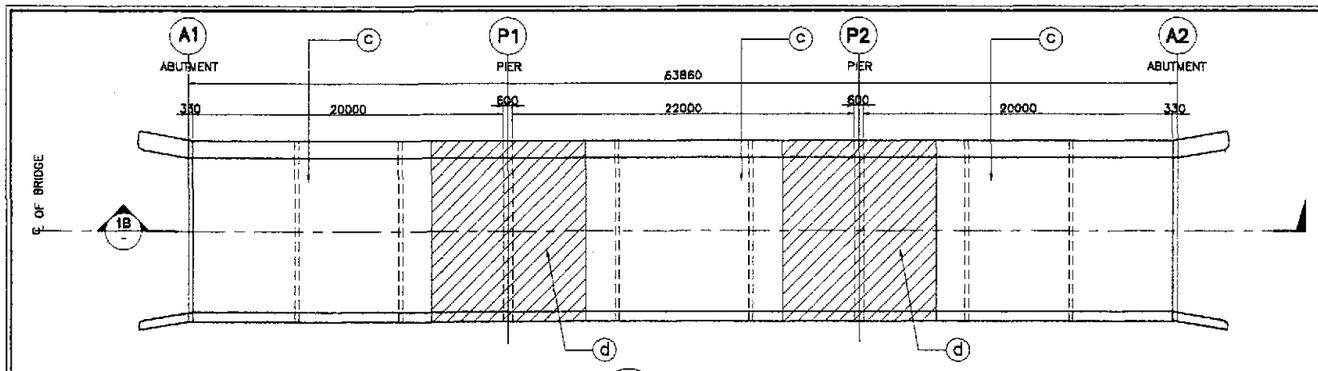

1A PLAN
SCALE 1:200

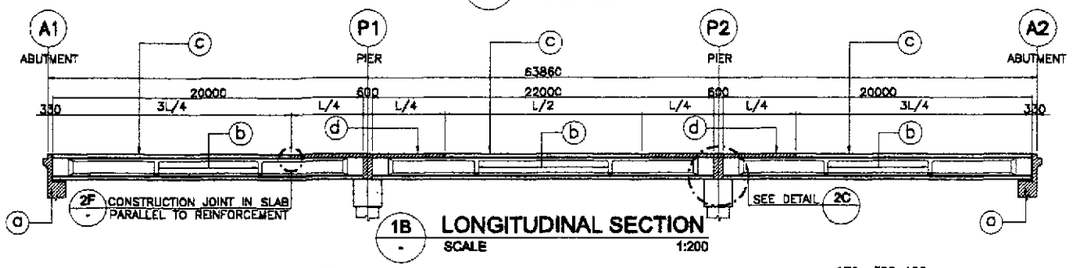

1B LONGITUDINAL SECTION
SCALE 1:200

1 CONC. POURING SEQUENCE
SCALE 1:200

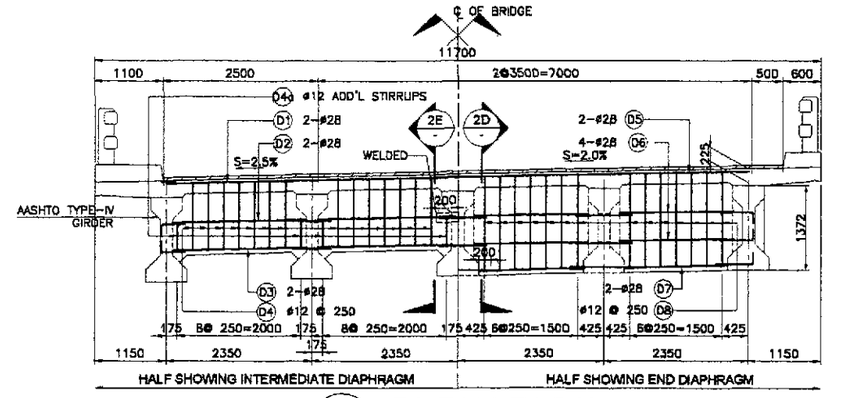

2A ELEVATION
SCALE 1:50

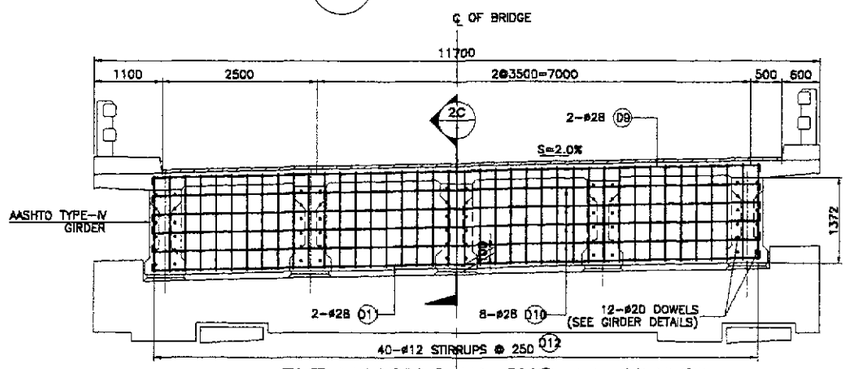

2B ELEVATION SHOWING DIAPHRAGM REINFORCEMENT @ PIER
SCALE 1:50

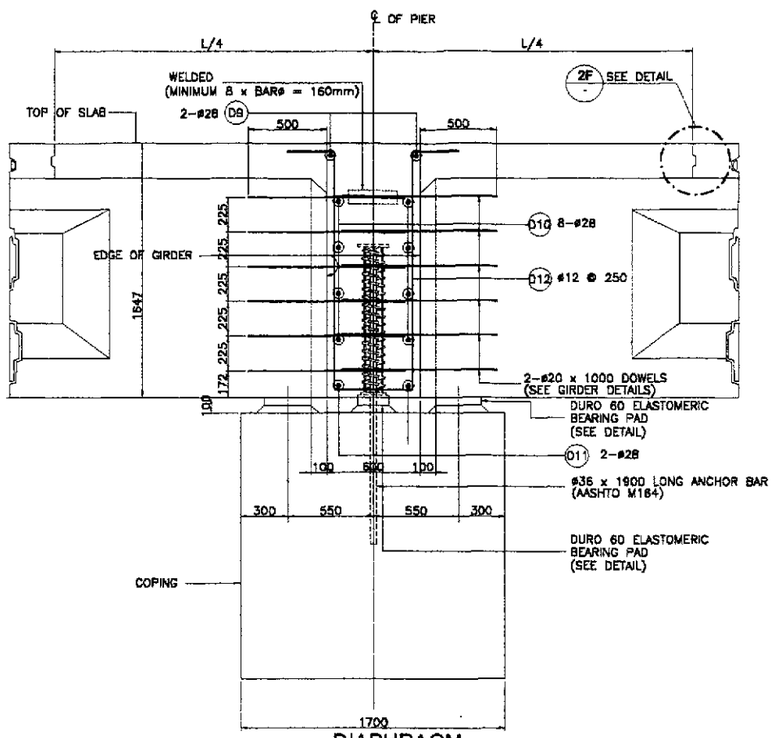

2C DIAPHRAGM @ PIER
SCALE 1:20

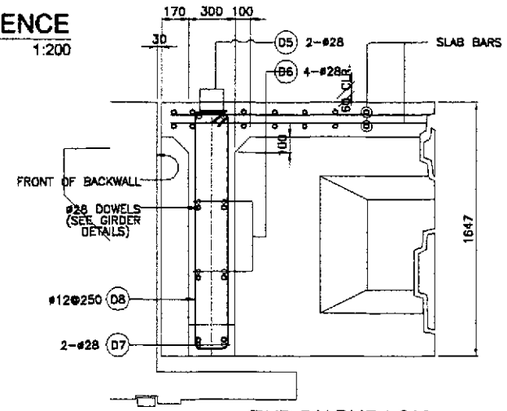

2D END DIAPHRAGM @ ABUTMENT
SCALE 1:20

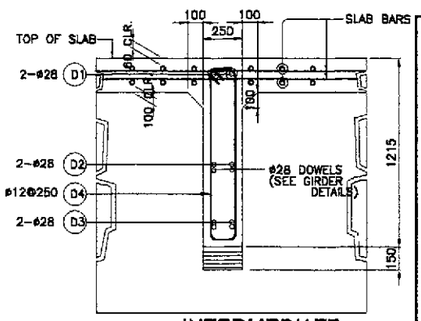

2E INTERMEDIATE DIAPHRAGM
SCALE 1:20

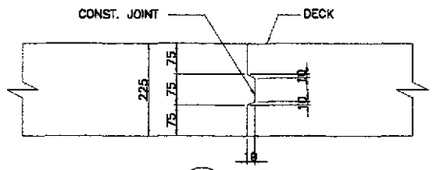

2F DETAIL
SCALE 1:20

NOTES:

1. CONCRETE AT ⓐ AREAS SHALL BE PLACED AT LEAST 21 DAYS AHEAD OF CONCRETE AT ⓑ AREAS.
2. CONCRETE AT ⓑ AREAS SHALL BE PLACED AT LEAST ONE DAY AHEAD OF CONCRETE AT ⓒ AREAS. POUR ⓒ AREAS LAST.
3. REINFORCEMENT SHALL BE CONTINUOUS AT CONSTRUCTION JOINTS.
4. SEE GIRDER DETAILS FOR SPACING OF ø28 DOWELS.

2 DIAPHRAGM DETAILS
SCALE AS SHOWN

BAR BENDING DIAGRAM

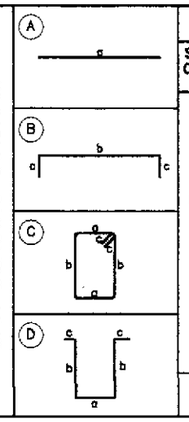

SCHEDULE OF REINFORCEMENT

STRUCTURE COMPONENT	LOCATION	CONCRETE VOLUME (m^3)	BAR MARK	BAR SIZE	QTY.	SPACING	BAR SHAPE	DIMENSIONS (mm) OUT TO OUT a	b	c	d	LENGTH PER BAR (mm)	TOTAL LENGTH (m)	UNIT WT. (kg/m)	TOTAL WEIGHT IN (kg)	REBAR RATIO (kg/m^3)
DIAPHRAGM	INTERMEDIATE DIAPHRAGM	14.69	D1	28	12	AS SHOWN	A	9400				9400	112.80	4.833	546	140.2
			D2	28	48	AS SHOWN	A	2145				2145	102.96	4.833	498	
			D3	28	48	AS SHOWN	A	2145				2145	102.96	4.833	498	
			D4	12	168	250	C	150	1200	150		3000	504.00	0.888	448	
			D4a	12	48	AS SHOWN	C	150	500	150		1600	76.80	0.888	69	
	END DIAPHRAGM	6.29	D5	28	4	AS SHOWN	A	9400				9400	37.60	4.833	182	127.10
			D6	28	32	AS SHOWN	A	1840				1840	58.88	4.833	285	
			D7	28	16	AS SHOWN	A	1840				1840	29.44	4.833	143	
			D8	12	56	250	C	200	1550	150		3800	212.80	0.888	189	
	DIAPHRAGM AT PIER	16.91	D9	28	4	AS SHOWN	B	500	9810	500		10810	43.24	4.833	209	91.85
			D10	28	16	AS SHOWN	B	500	9810	500		10810	172.96	4.833	836	
			D11	28	4	AS SHOWN	B	500	9810	500		10810	43.24	4.833	209	
			D12	12	80	250	D	500	1550	300		4200	336.00	0.888	299	
	TOTAL	37.88												GRADE 60 TOTAL = 3406 kgs.		
														GRADE 40 TOTAL = 1,005 kgs.		

JICA
JAPAN INTERNATIONAL COOPERATION AGENCY
KEI KATAHIRA & ENGINEERS INTERNATIONAL
YEC YACHIYO ENGINEERING CO., LTD.

	DATE	SIGNATURE
DESIGNED	10/15/02	J. M. SALLAN
CHECKED	10/15/02	M. KOBAYASHI
SUBMITTED	10/16/02	M. FUJICHI, TEAM LEADER

REPUBLIC OF THE PHILIPPINES
DEPARTMENT OF PUBLIC WORKS AND HIGHWAYS

PUHL – PMO	BUREAU OF DESIGN		OFFICE OF THE SECRETARY	
Submitted By:	Reviewed By:	Recommended By:	Recommended By: (See cover sheet for Signature)	Approved By: (See cover sheet for Signature/Approval)
DANILO C. TRAJANO, Project Director	ADRIANO M. DOROY, Chief, Bridges Division	GILBERTO S. REYES, Director IV (OIC)	MANUEL M. BONOAN, Undersecretary	SIMEON A. DATUMANONG, Secretary

PROJECT AND LOCATION :
THE DETAILED DESIGN STUDY ON UPGRADING INTER-URBAN HIGHWAY SYSTEM ALONG THE PAN-PHILIPPINE HIGHWAY (Plaridel, Cabanatuan and San Jose Bypasses)
CABANATUAN BYPASS - CONTRACT PACKAGE I

SCALE : AS SHOWN
FULL SIZE A1

SHEET CONTENTS :
BRIDGE NO. 2
CONCRETE POURING SEQUENCE AND DIAPHRAGM DETAILS (ULTIMATE STAGE)

SHEET NO. : B2-05

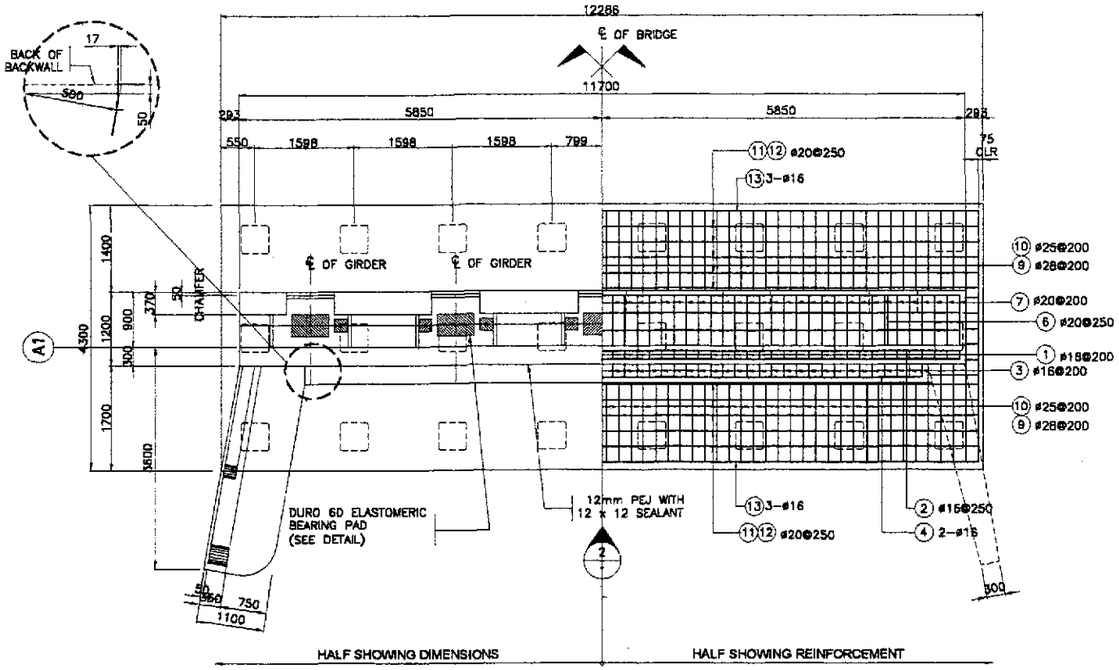

1 PLAN
SCALE 1:50

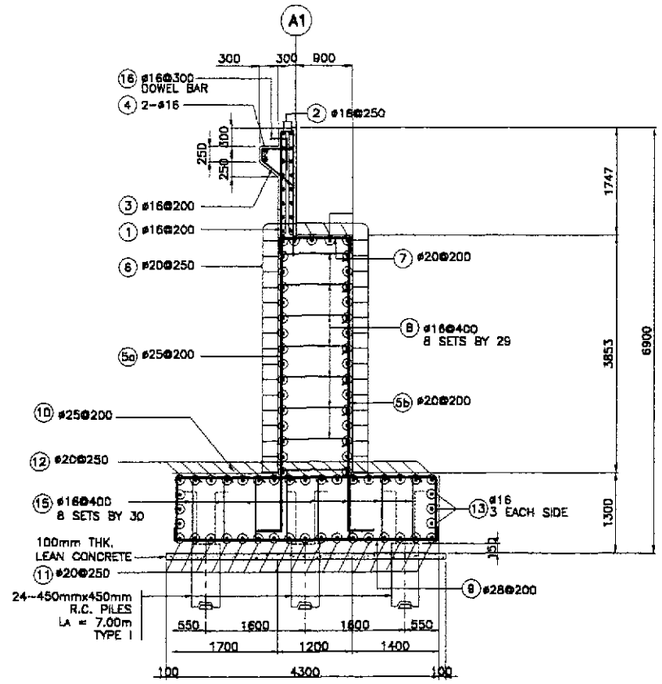

3 SECTION
SCALE 1:50

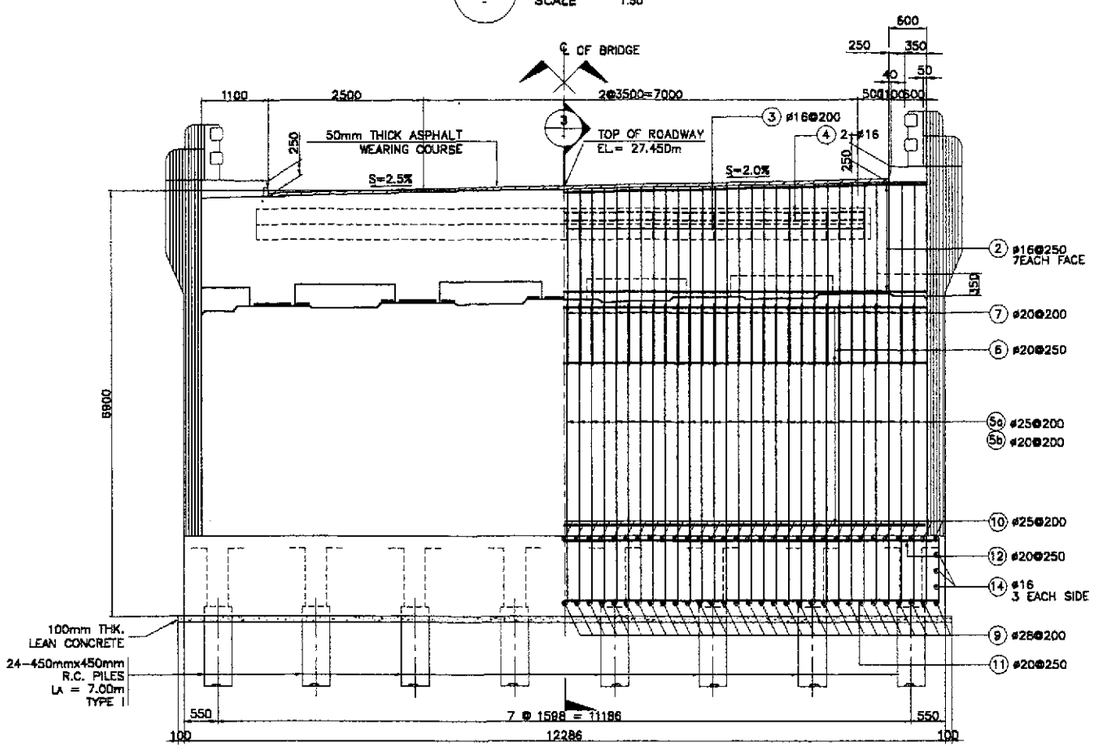

2 ELEVATION
SCALE 1:50

BAR BENDING DIAGRAM

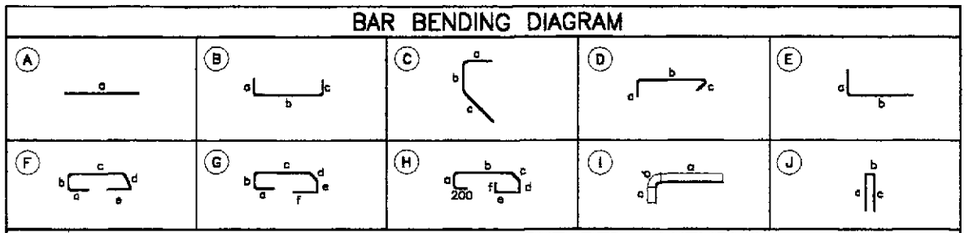

SCHEDULE OF REINFORCEMENT PER ABUTMENT

LOCATION	CONCRETE VOLUME (m^3)	BAR MARK	BAR SIZE	QTY.	SPACING	BAR SHAPE	DIMENSIONS (mm) OUT TO OUT a	b	c	d	e	f	LENGTH EA. BAR (mm)	TOTAL LENGTH (m)	UNIT WT. (kg/m)	WEIGHT (kg)	REBAR RATIO (kg/m^3)
BACKWALL	7.26	1	16	59	200	B	2000	200	2000	–	–	–	4200	247.80	1.579	392	110.51
		2	16	14	250	A	11600	–	–	–	–	–	11600	162.40	1.579	257	
		3	16	51	200	C	600	150	750	–	–	–	1500	76.50	1.579	121	
		4	16	2	AS SHOWN	A	9900	–	–	–	–	–	9900	19.80	1.579	32	
MAINWALL	54.10	5a	25	59	200	E	400	4900	–	–	–	–	5300	312.70	3.854	1206	70.25
		5b	20	59	200	E	400	4900	–	–	–	–	5300	312.70	2.466	772	
		6	20	35	250	A	11600	–	–	–	–	–	11600	406.00	2.466	1002	
		7	20	59	200	B	250	1100	250	–	–	–	1600	94.40	2.466	233	
		8	16	232	400	D	250	1100	250	–	–	–	1600	371.20	1.579	587	
FOOTING	68.68	9	28	62	200	B	700	4150	700	–	–	–	5550	344.10	4.833	1664	72.47
		10	25	62	200	B	700	4150	700	–	–	–	5550	344.10	3.854	1327	
		11	20	18	250	B	700	12150	700	–	–	–	13550	243.90	2.466	602	
		12	20	18	250	B	700	12150	700	–	–	–	13550	243.90	2.466	602	
		13	16	6	AS SHOWN	A	12150	–	–	–	–	–	12150	72.90	1.579	116	
		14	16	6	AS SHOWN	A	4150	–	–	–	–	–	4150	24.90	1.579	40	
		15	16	240	400	D	250	1150	250				1650	396.00	1.579	626	
DOWEL		16	16	34	300	E	650	500	–	–	–	–	1150	39.10	1.579	62	
TOTAL	130.04															GRADE 40 TOTAL = 2,233 kgs. GRADE 60 TOTAL = 7,408 kgs.	

JICA
JAPAN INTERNATIONAL COOPERATION AGENCY
KEI KATAHIRA & ENGINEERS INTERNATIONAL
YEO YACHIYO ENGINEERING CO., LTD.

	DATE	SIGNATURE
DESIGNED	10/5/02	A. P. GONZALES
CHECKED	10/5/02	M. OBAYASHI
SUBMITTED	10/6/02	M. KUSUMI TEAM LEADER

REPUBLIC OF THE PHILIPPINES
DEPARTMENT OF PUBLIC WORKS AND HIGHWAYS

PJHL – PMO	BUREAU OF DESIGN		OFFICE OF THE SECRETARY	
Submitted By:	Reviewed By:	Recommended By:	Recommended By: (See cover sheet for Signature)	Approved By: (See cover sheet for Signature/Approval)
DANILO C. TRAJANO Project Director	ADRIANO M. DOROY Chief, Bridges Division	GILBERTO S. REYES Director IV (OIC)	MANUEL M. BONDAN Undersecretary	SIMEON A. DATUMANONG Secretary

PROJECT AND LOCATION :
THE DETAILED DESIGN STUDY ON UPGRADING INTER-URBAN HIGHWAY SYSTEM ALONG THE PAN-PHILIPPINE HIGHWAY (Plaridel, Cabanatuan and San Jose Bypasses)
CABANATUAN BYPASS - CONTRACT PACKAGE I

SCALE : 1 : 50 FULL SIZE A1

SHEET CONTENTS :
BRIDGE NO. 2
ABUTMENT A1
MAINWALL REINFORCEMENT DETAILS
(ULTIMATE STAGE)

SHEET NO. : B2-06

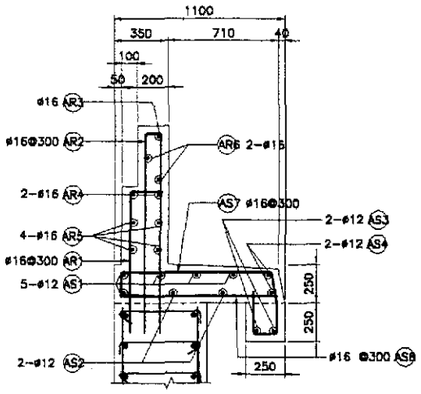

5A SECTION
SCALE 1:20

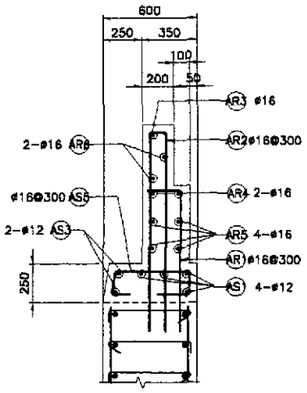

5B SECTION
SCALE 1:20

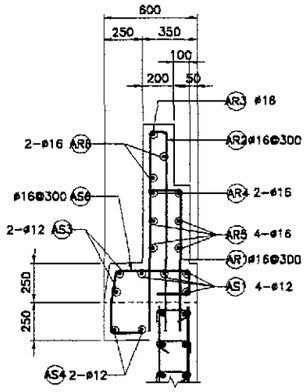

5C SECTION
SCALE 1:20

5 APPROACH RAIL DETAILS
SCALE 1:20

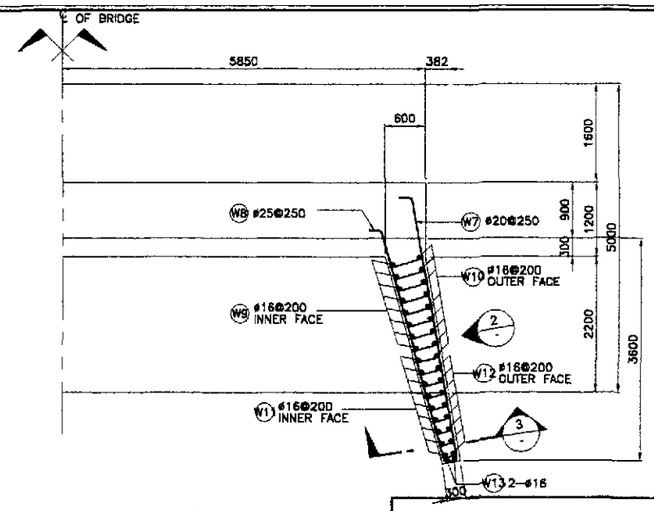

1 PLAN
SCALE 1:50

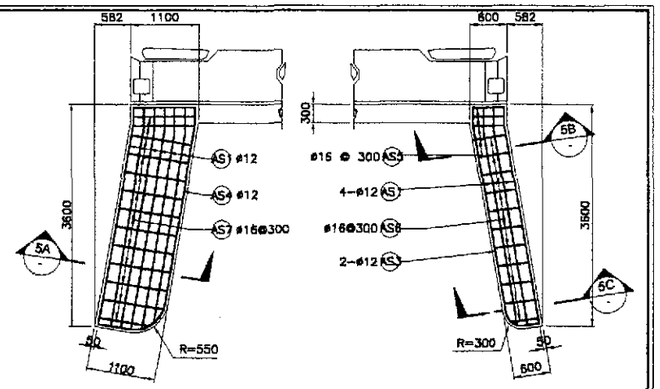

LEFT SIDE RIGHT SIDE

4 SIDEWALK DETAIL
SCALE 1:50

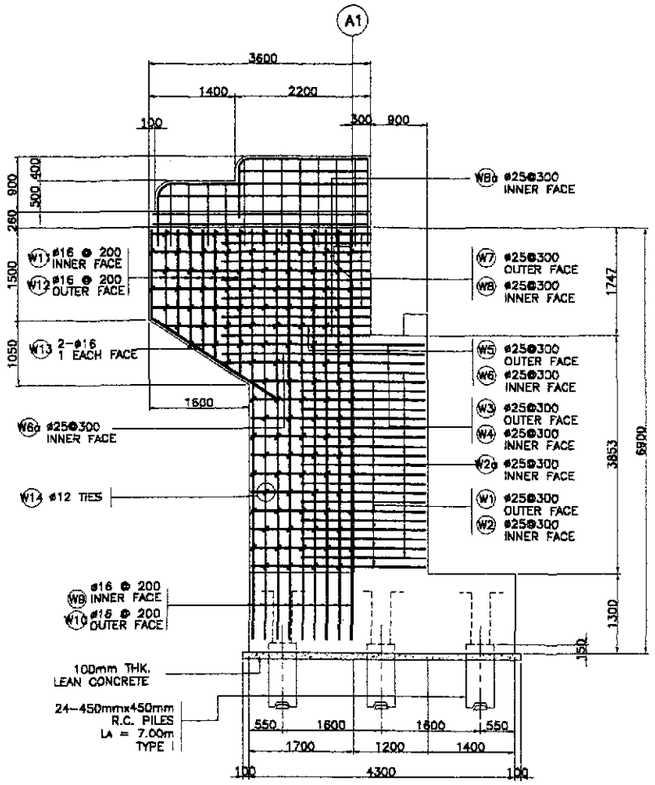

2 WINGWALL ELEVATION
SCALE 1:50

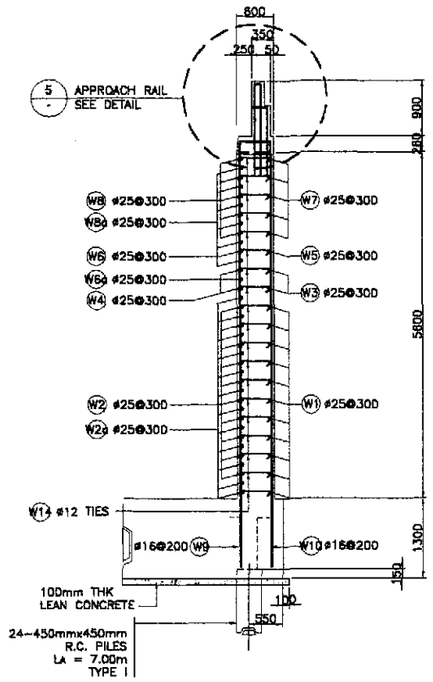

3 SECTION
SCALE 1:50

BAR BENDING DIAGRAM

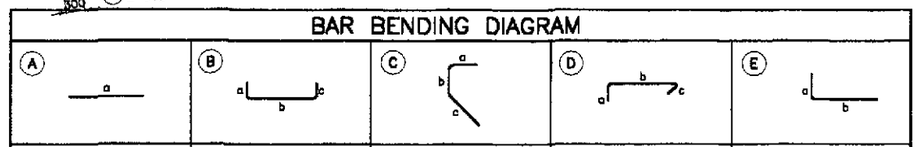

SCHEDULE OF REINFORCEMENT PER ABUTMENT

LOCATION	CONCRETE VOLUME (m^3)	BAR MARK	BAR SIZE	QTY.	SPACING	BAR SHAPE	DIMENSIONS (mm) OUT TO OUT a	b	c	d	e	f	LENGTH EA. BAR (mm)	TOTAL LENGTH (m)	UNIT WT. (kg/m)	WEIGHT (kg)	REBAR RATIO (kg/m^3)
WINGWALL	11.48	W1	25	22	300	B	400	2800	150	–	–	–	3350	73.70	3.854	285	183.30
		W2	25	22	300	B	400	2800	150	–	–	–	3350	73.70	3.854	285	
		W2a	25	22	300	E	400	1950	–	–	–	–	2350	51.70	3.854	200	
		W3	25	4	300	B	400	3550	150	–	–	–	4100	16.40	3.854	64	
		W4	25	4	300	B	400	3550	150	–	–	–	4100	16.40	3.854	64	
		W5	25	2	300	B	400	3300	150	–	–	–	3850	7.70	3.854	30	
		W6	25	2	300	B	400	3300	150	–	–	–	3850	7.70	3.854	30	
		W6a	25	2	300	E	400	3250	–	–	–	–	3650	7.30	3.854	29	
		W7	25	10	300	B	400	3500	150	–	–	–	4050	40.50	3.854	157	
		W8	25	10	300	B	400	3500	150	–	–	–	4050	40.50	3.854	157	
		W8a	25	12	300	E	400	2400	–	–	–	–	2800	33.60	3.854	130	
		W9	16	18	200	E	250	6650	–	–	–	–	6900	124.20	1.579	197	
		W10	16	18	200	E	250	6650	–	–	–	–	6900	124.20	1.579	197	
		W11	16	14	200	E	250	1950	–	–	–	–	2200	30.80	1.579	49	
		W12	16	14	200	E	250	1950	–	–	–	–	2200	30.80	1.579	49	
		W13	16	4	AS SHOWN	C	250	1500	2500	–	–	–	4250	17.00	1.579	27	
		W14	12	220	AS SHOWN	D	170	450	170	–	–	–	790	173.80	0.888	155	
													GRADE 60 TOTAL= 1,431 kgs. GRADE 40 TOTAL= 574 kgs				
APPROACH RAILING AND SIDEWALK	3.53	AS1	12	9	AS SHOWN	A	3500	–	–	–	–	–	3500	31.50	0.888	28	98.34
		AS2	12	2	AS SHOWN	A	3500	–	–	–	–	–	3500	7.00	0.888	7	
		AS3	12	4	AS SHOWN	A	3500	–	–	–	–	–	3500	14.00	0.888	13	
		AS4	12	4	AS SHOWN	A	3500	–	–	–	–	–	3500	14.00	0.888	13	
		AS5	16	3	300	F	200	170	480	200	200	–	1250	3.75	1.579	6	
		AS6	16	11	300	G	200	170	480	200	170	200	1420	15.62	1.579	25	
		AS7	16	14	300	H	200	170	980	200	170	200	2120	29.68	1.579	47	
		AS8	16	14	300	E	200	1020	–	–	–	–	1220	17.08	1.579	27	
		AR1	16	8	300	E	200	900	–	–	–	–	1100	8.80	1.579	14	
		AR2	16	16	300	J	1300	120	1300	–	–	–	2720	43.52	1.579	69	
		AR3	16	2	AS SHOWN	I	2100	236	1300	–	–	–	3636	7.27	1.579	12	
		AR4	16	4	AS SHOWN	I	3400	236	900	–	–	–	4536	18.14	1.579	28	
		AR5	16	8	AS SHOWN	A	3400	–	–	–	–	–	3400	27.20	1.579	43	
		AR6	16	4	AS SHOWN	A	2100	–	–	–	–	–	2100	8.40	1.579	14	
													GRADE 40 TOTAL= 347 kgs.				
TOTAL	15.01												GRADE 60 TOTAL = 1,431 kgs. GRADE 40 TOTAL = 1,021 kgs.				

JICA
JAPAN INTERNATIONAL COOPERATION AGENCY
KEI KATAHIRA & ENGINEERS INTERNATIONAL
YEC YACHIYO ENGINEERING CO., LTD.

	DATE	SIGNATURE
DESIGNED	10/5/01	A. R. GONZALES
CHECKED	10/5/01	M. KURAMASHI
SUBMITTED	10/16/01	M. KIUCHI TEAM LEADER

REPUBLIC OF THE PHILIPPINES
DEPARTMENT OF PUBLIC WORKS AND HIGHWAYS

PJHL – PMO	BUREAU OF DESIGN		OFFICE OF THE SECRETARY	
Submitted By:	Reviewed By:	Recommended By:	Recommended By: (See cover sheet for Signature)	Approved By: (See cover sheet for Signature/Approval)
DANILO C. TRAJANO Project Director	ADRIANO M. DOROY Chief, Bridges Division	GILBERTO S. REYES Director IV (OIC)	MANUEL M. BONOAN Undersecretary	SIMEON A. DATUMANONG Secretary

PROJECT AND LOCATION :
THE DETAILED DESIGN STUDY ON UPGRADING INTER-URBAN HIGHWAY SYSTEM ALONG THE PAN-PHILIPPINE HIGHWAY (Plaridel, Cabanatuan and San Jose Bypasses)
CABANATUAN BYPASS - CONTRACT PACKAGE I

SCALE : AS SHOWN FULL SIZE A1

SHEET CONTENTS :
BRIDGE NO. 2
ABUTMENT A1
WINGWALL REINFORCEMENT DETAILS
(ULTIMATE STAGE)

SHEET NO. : B2-07

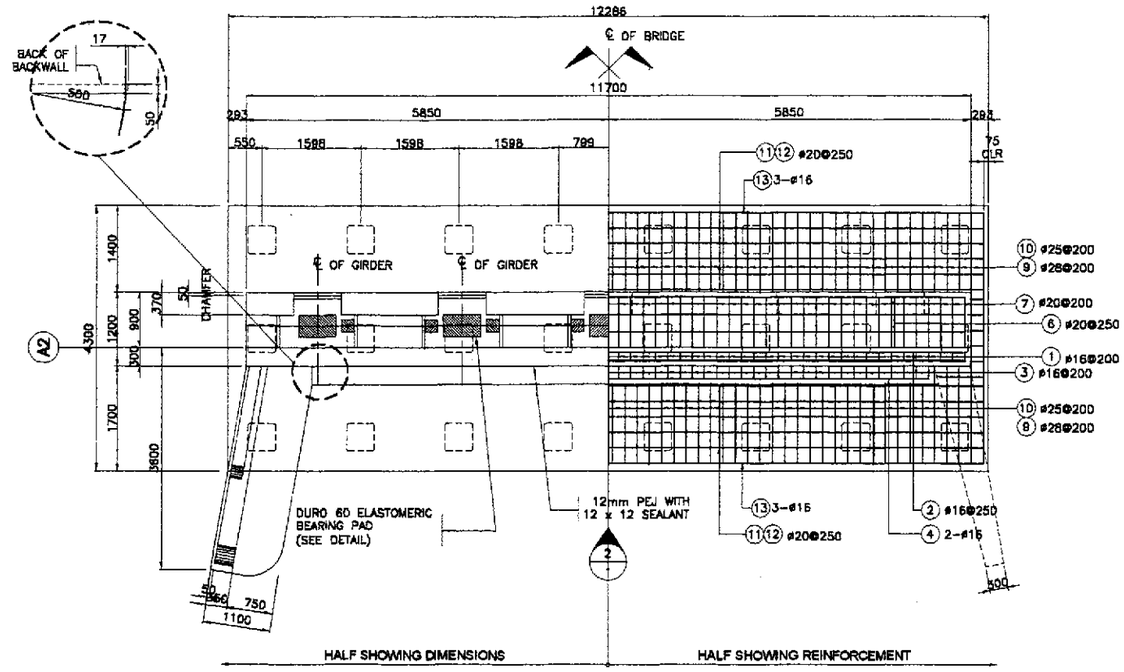

1 PLAN
SCALE 1:50

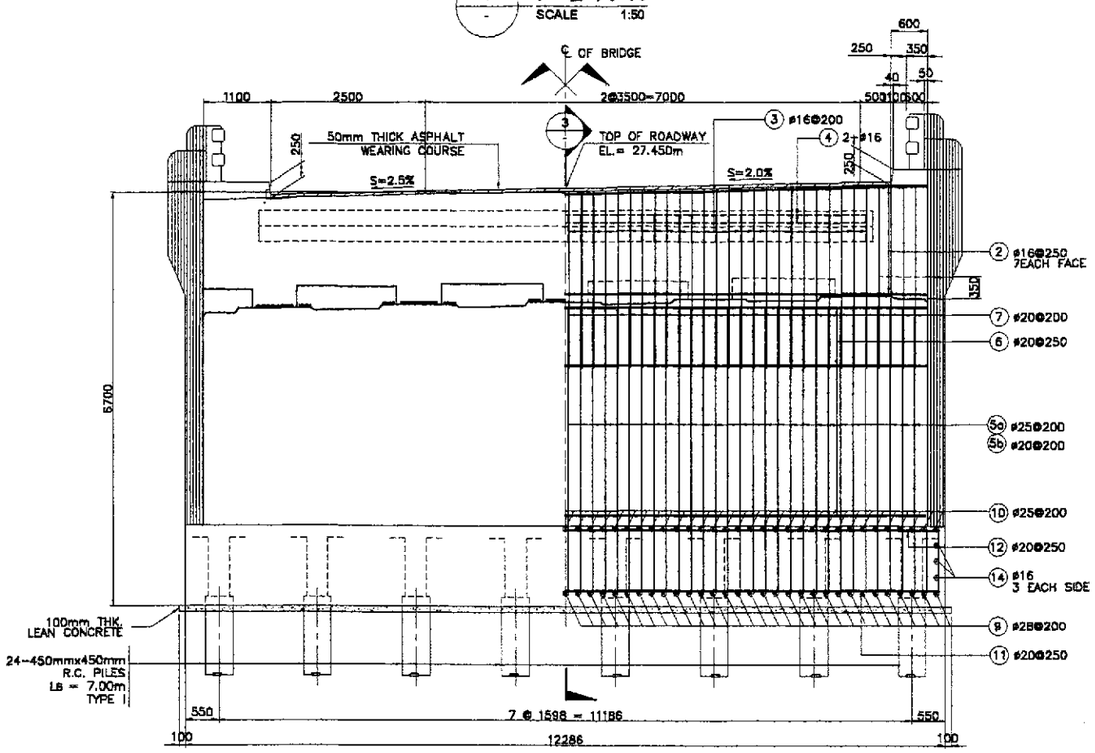

2 ELEVATION
SCALE 1:50

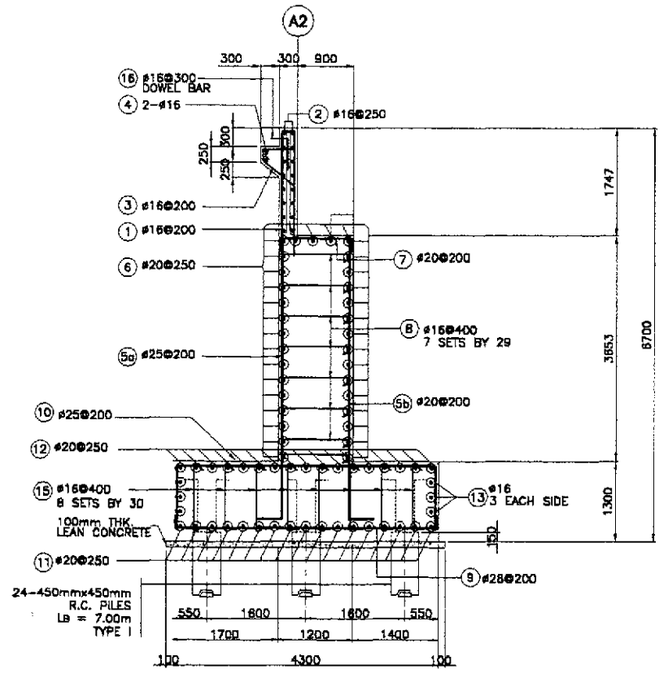

3 SECTION
SCALE 1:50

BAR BENDING DIAGRAM

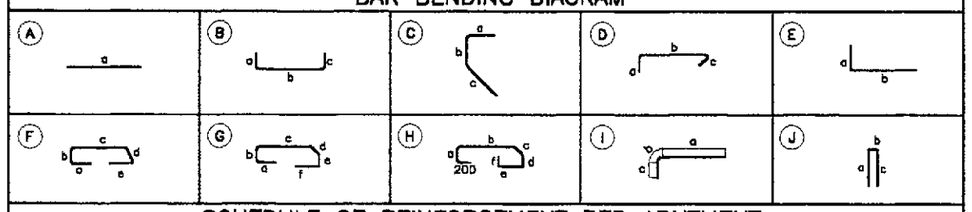

SCHEDULE OF REINFORCEMENT PER ABUTMENT

LOCATION	CONCRETE VOLUME (m^3)	BAR MARK	BAR SIZE	QTY.	SPACING	BAR SHAPE	DIMENSIONS (mm) OUT TO OUT a	b	c	d	e	f	LENGTH EA. BAR (mm)	TOTAL LENGTH (m)	UNIT WT. (kg/m)	WEIGHT (kg)	REBAR RATIO (kg/m^3)
BACKWALL	7.26	1	16	59	200	B	2000	200	2000	–	–	–	4200	247.80	1.579	392	110.51
		2	16	14	250	A	11600	–	–	–	–	–	11600	162.40	1.579	257	
		3	16	51	200	C	600	150	750	–	–	–	1500	76.50	1.579	121	
		4	16	2	AS SHOWN	A	9900	–	–	–	–	–	9900	19.80	1.579	32	
MAINWALL	51.29	5a	25	59	200	E	400	4700	–	–	–	–	5100	300.90	3.854	1160	70.06
		5b	20	59	200	E	400	4700	–	–	–	–	5100	300.90	2.466	743	
		6	20	33	250	A	11600	–	–	–	–	–	11600	382.80	2.466	944	
		7	20	59	200	B	250	1100	250	–	–	–	1600	94.40	2.466	233	
		8	16	203	400	D	250	1100	250	–	–	–	1600	324.80	1.579	513	
FOOTING	58.68	9	28	62	200	B	700	4150	700	–	–	–	5550	344.10	4.833	1664	72.47
		10	25	82	200	B	700	4150	700	–	–	–	5550	344.10	3.854	1327	
		11	20	18	250	B	700	12150	700	–	–	–	13550	243.90	2.466	602	
		12	20	18	250	B	700	12150	700	–	–	–	13550	243.90	2.466	602	
		13	16	6	AS SHOWN	A	12150	–	–	–	–	–	12150	72.90	1.579	115	
		14	16	5	AS SHOWN	A	4150	–	–	–	–	–	4150	24.90	1.579	40	
		15	16	240	400	D	250	1150	250				1650	396.00	1.579	628	
DOWEL		16	16	34	300	E	650	500	–	–	–	–	1150	39.10	1.579	62	
TOTAL	127.22															GRADE 40 TOTAL = 2,159 kgs. GRADE 60 TOTAL = 7,275 kgs.	

JICA
JAPAN INTERNATIONAL COOPERATION AGENCY
KEI KATAHIRA & ENGINEERS INTERNATIONAL
YEO YACHIYO ENGINEERING CO., LTD.

	DATE	SIGNATURE
DESIGNED	10/15/02	A. P. GONZALES
CHECKED	10/15/02	M. KOBAYASHI
SUBMITTED	10/16/02	M. KIKUCHI TEAM LEADER

REPUBLIC OF THE PHILIPPINES
DEPARTMENT OF PUBLIC WORKS AND HIGHWAYS

PUHL – PMO	BUREAU OF DESIGN		OFFICE OF THE SECRETARY	
Submitted By:	Reviewed By:	Recommended By:	Recommended By: (See cover sheet for Signature)	Approved By: (See cover sheet for Signature/Approval)
DANILO C. TRAJANO Project Director	ADRIANO M. DOROY Chief, Bridges Division	GILBERTO S. REYES Director IV (OIC)	MANUEL M. BONOAN Undersecretary	SIMEON A. DATUMANONG Secretary

PROJECT AND LOCATION :
THE DETAILED DESIGN STUDY ON UPGRADING INTER-URBAN HIGHWAY SYSTEM ALONG THE PAN-PHILIPPINE HIGHWAY (Plaridel, Cabanatuan and San Jose Bypasses)
CABANATUAN BYPASS - CONTRACT PACKAGE I

SCALE : 1 : 50
FULL SIZE A1

SHEET CONTENTS :
BRIDGE NO. 2
ABUTMENT A2
MAINWALL REINFORCEMENT DETAILS
(ULTIMATE STAGE)

SHEET NO. : B2-08

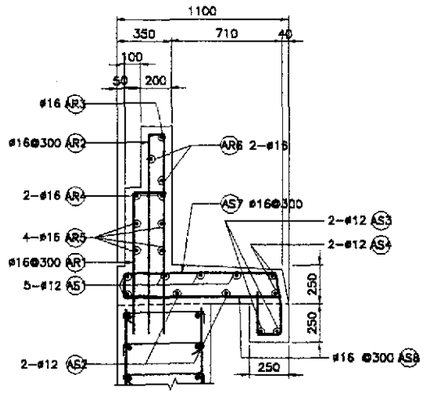

5A SECTION
SCALE 1:20

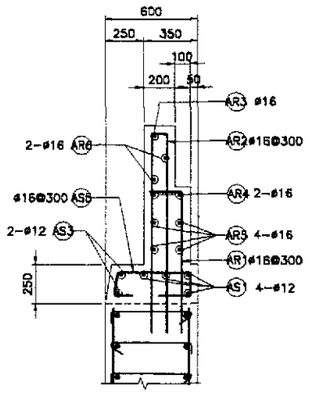

5B SECTION
SCALE 1:20

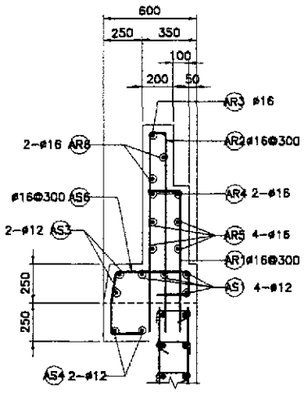

5C SECTION
SCALE 1:20

5 APPROACH RAIL DETAILS
SCALE 1:20

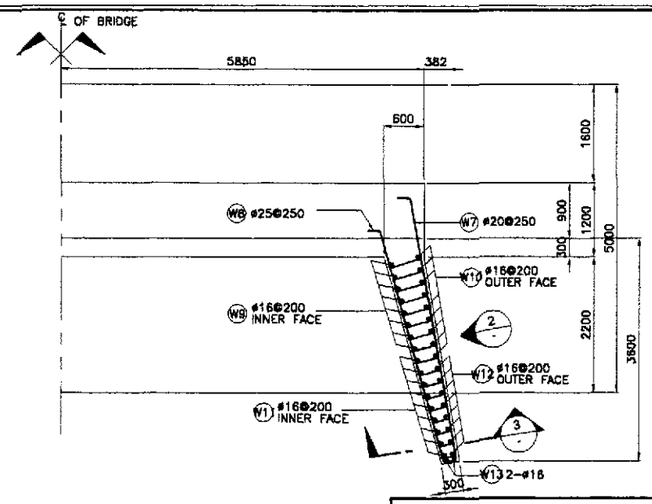

1 PLAN
SCALE 1:50

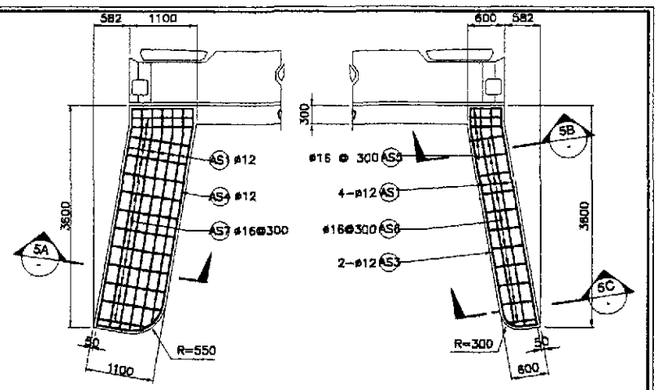

LEFT SIDE RIGHT SIDE

4 SIDEWALK DETAIL
SCALE 1:50

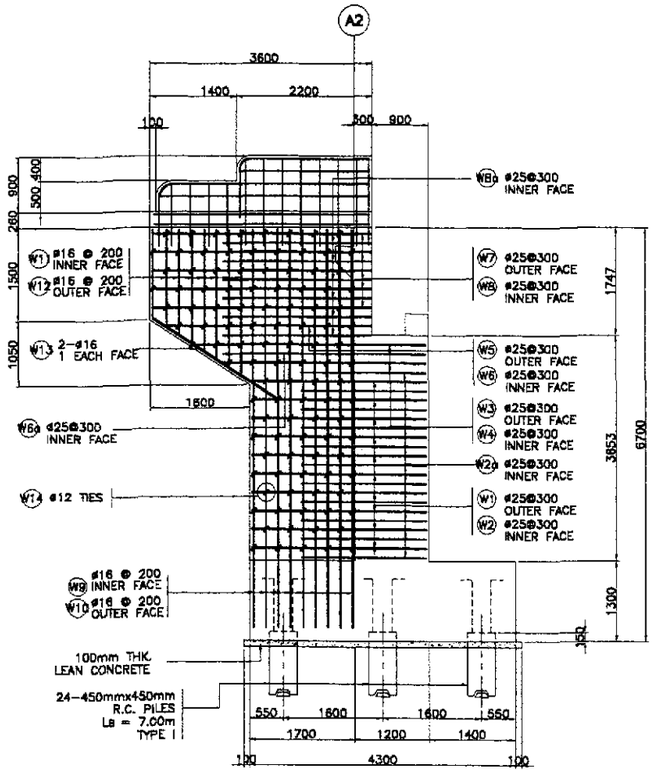

2 WINGWALL ELEVATION
SCALE 1:50

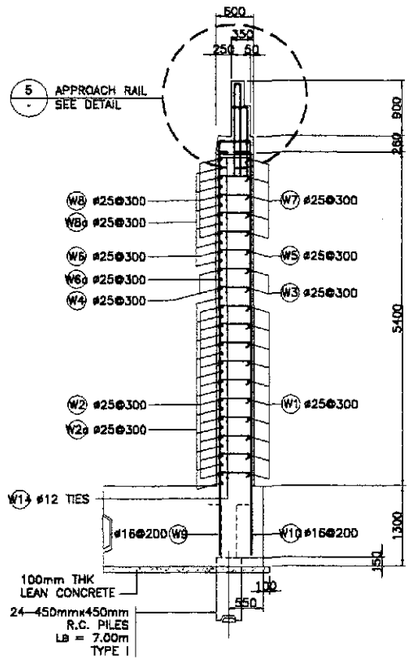

3 SECTION
SCALE 1:50

BAR BENDING DIAGRAM

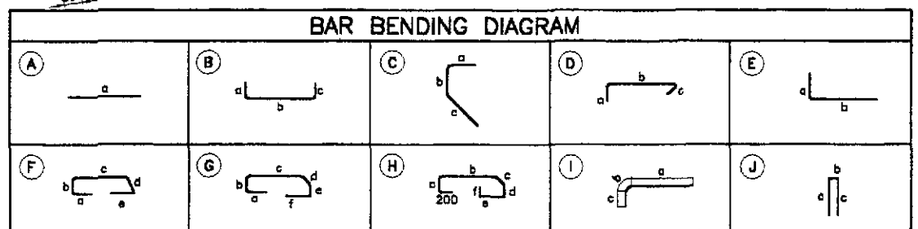

SCHEDULE OF REINFORCEMENT PER ABUTMENT

LOCATION	CONCRETE VOLUME (m³)	BAR MARK	BAR SIZE	QTY.	SPACING	BAR SHAPE	DIMENSIONS (mm) OUT TO OUT a	b	c	d	e	f	LENGTH EA. BAR (mm)	TOTAL LENGTH (m)	UNIT WT. (kg/m)	WEIGHT (kg)	REBAR RATIO (kg/m³)
WINGWALL	11.18	W1	25	20	300	B	400	2800	150	–	–	–	3350	67.00	3.854	259	182.05
		W2	25	20	300	B	400	2800	150	–	–	–	3350	67.00	3.854	259	
		W2a	25	22	300	E	400	1950	–	–	–	–	2350	51.70	3.854	200	
		W3	25	4	300	B	400	3550	150	–	–	–	4100	16.40	3.854	64	
		W4	25	4	300	B	400	3550	150	–	–	–	4100	16.40	3.854	64	
		W5	25	2	300	B	400	3300	150	–	–	–	3850	7.70	3.854	30	
		W6	25	2	300	B	400	3300	150	–	–	–	3850	7.70	3.854	30	
		W6a	25	2	300	E	400	3250	–	–	–	–	3650	7.30	3.854	29	
		W7	25	10	300	B	400	3500	150	–	–	–	4050	40.50	3.854	157	
		W8	25	10	300	B	400	3500	150	–	–	–	4050	40.50	3.854	157	
		W8a	25	12	300	E	400	2400	–	–	–	–	2800	33.60	3.854	130	
		W9	16	18	200	E	250	6450	–	–	–	–	6700	120.60	1.579	191	
		W10	16	18	200	E	250	6450	–	–	–	–	6700	120.60	1.579	191	
		W11	16	14	200	E	250	1950	–	–	–	–	2200	30.80	1.579	49	
		W12	16	14	200	E	250	1950	–	–	–	–	2200	30.80	1.579	49	
		W13	16	4	AS SHOWN	C	250	1500	2500	–	–	–	4250	17.00	1.579	27	
		W14	12	212	AS SHOWN	D	170	450	170	–	–	–	790	167.48	0.888	149	
													GRADE 60 TOTAL= 1,379 kgs. GRADE 40 TOTAL= 656 kgs.				
APPROACH RAILING AND SIDEWALK	3.53	AS1	12	9	AS SHOWN	A	3500	–	–	–	–	–	3500	31.50	0.888	28	98.34
		AS2	12	2	AS SHOWN	A	3500	–	–	–	–	–	3500	7.00	0.888	7	
		AS3	12	4	AS SHOWN	A	3500	–	–	–	–	–	3500	14.00	0.888	13	
		AS4	12	4	AS SHOWN	A	3500	–	–	–	–	–	3500	14.00	0.888	13	
		AS5	16	3	300	F	200	170	480	200	200	–	1250	3.75	1.579	6	
		AS6	16	11	300	G	200	170	480	200	170	200	1420	15.62	1.579	25	
		AS7	16	14	300	H	200	170	980	200	170	200	2120	29.68	1.579	47	
		AS8	16	14	300	E	200	1020	–	–	–	–	1220	17.08	1.579	27	
		AR1	16	8	300	E	200	900	–	–	–	–	1100	8.80	1.579	14	
		AR2	16	16	300	J	1300	120	1300	–	–	–	2720	43.52	1.579	69	
		AR3	16	2	AS SHOWN	I	2100	236	1300	–	–	–	3636	7.27	1.579	12	
		AR4	16	4	AS SHOWN	I	3400	236	900	–	–	–	4536	18.14	1.579	29	
		AR5	16	8	AS SHOWN	A	3400	–	–	–	–	–	3400	27.20	1.579	43	
		AR6	16	4	AS SHOWN	A	2100	–	–	–	–	–	2100	8.40	1.579	14	
													GRADE 40 TOTAL= 347 kgs.				
TOTAL	14.71												GRADE 60 TOTAL = 1,379 kgs. GRADE 40 TOTAL = 1,003 kgs.				

JICA
JAPAN INTERNATIONAL COOPERATION AGENCY
KEI KATAHIRA & ENGINEERS INTERNATIONAL
YCO YACHIYO ENGINEERING CO., LTD.

	DATE	SIGNATURE
DESIGNED	10/15/02	A. P. GONZALES
CHECKED	10/15/02	N. KOBAYASHI
SUBMITTED	10/16/02	M. KUCHI TEAM LEADER

REPUBLIC OF THE PHILIPPINES
DEPARTMENT OF PUBLIC WORKS AND HIGHWAYS

PUHL – PWO	BUREAU OF DESIGN		OFFICE OF THE SECRETARY	
Submitted By:	Reviewed By:	Recommended By:	Recommended By: (See cover sheet for Signature)	Approved By: (See cover sheet for Signature/Approval)
DANILO C. TRAJANO Project Director	ADRIANO M. DORDY Chief, Bridges Division	GILBERTO S. REYES Director IV (OIC)	MANUEL M. BONGAN Undersecretary	SIMEON A. DATUMANONG Secretary

PROJECT AND LOCATION :
THE DETAILED DESIGN STUDY ON UPGRADING INTER-URBAN HIGHWAY SYSTEM ALONG THE PAN-PHILIPPINE HIGHWAY (Plaridel, Cabanatuan and San Jose Bypasses)
CABANATUAN BYPASS - CONTRACT PACKAGE I

SCALE : AS SHOWN FULL SIZE A1

SHEET CONTENTS :
BRIDGE NO. 2
ABUTMENT A2
WINGWALL REINFORCEMENT DETAILS
(ULTIMATE STAGE)

SHEET NO. : B2-09

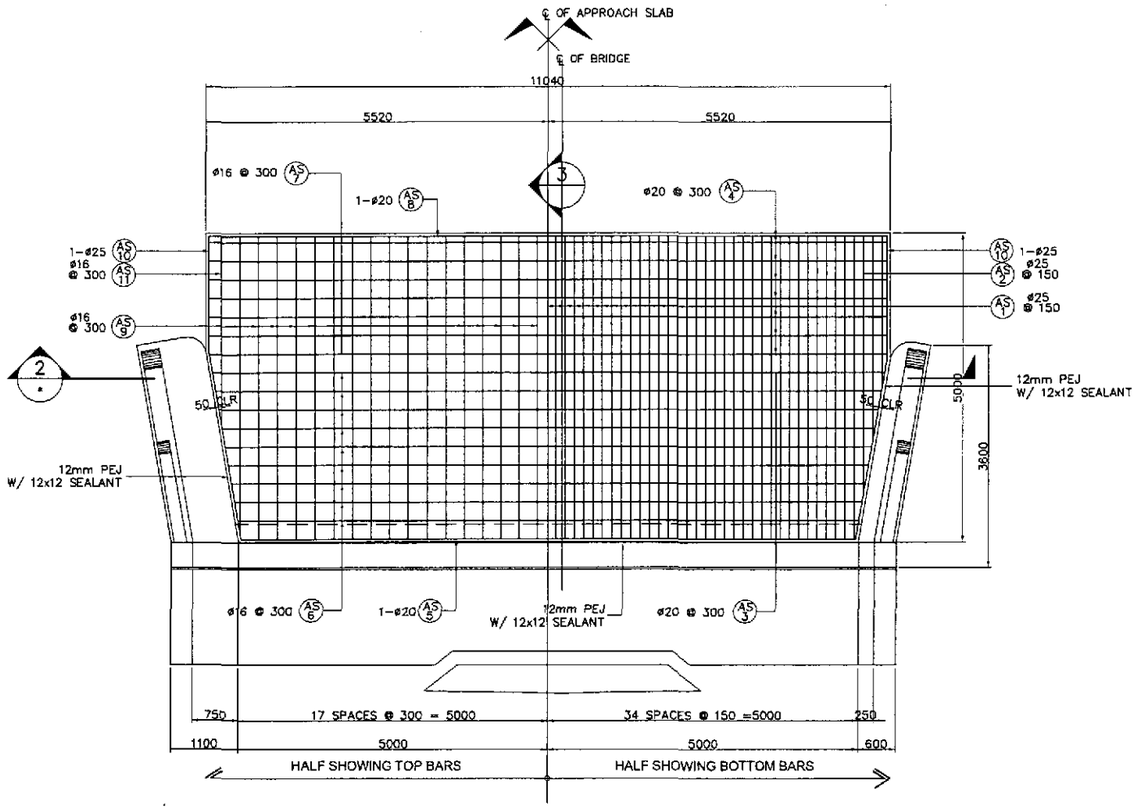

1 PLAN
SCALE 1:50

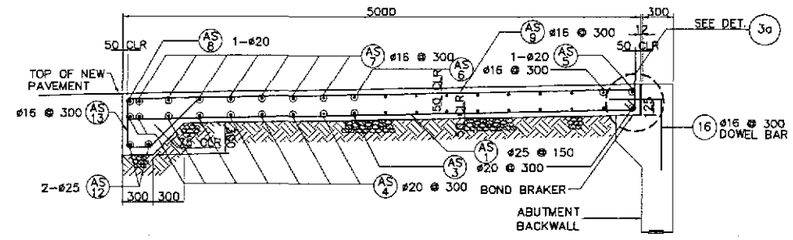

3 SECTION
SCALE 1:30

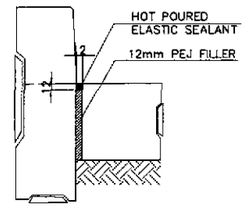

2a DETAIL
SCALE 1:10

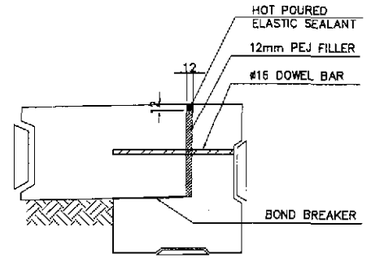

3a DETAIL
SCALE 1:10

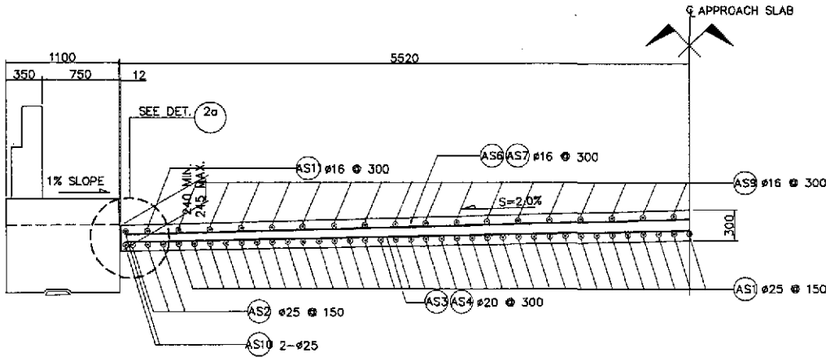

2 SECTION
SCALE 1:30

BAR BENDING DIAGRAM

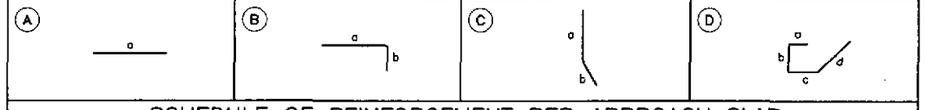

SCHEDULE OF REINFORCEMENT PER APPROACH SLAB

LOCATION	CONCRETE VOLUME (m^3)	BAR MARK	BAR SIZE	QTY.	SPACING	BAR SHAPE	DIMENSIONS (mm) OUT TO OUT a	b	c	d	e	f	LENGTH EA. BAR (mm)	TOTAL LENGTH (m)	UNIT WEIGHT (kg/m)	WEIGHT (kg)	REBAR RATIO (kg/cu.m)
APPROACH SLAB	17.57	AS1	25	68	150	B	4900	200	–	–	–	–	5100	346.80	3.854	1337	156.66
		AS2	25	6	150	B	3200	200	–	–	–	–	3400	20.40	3.854	79	
		AS3	20	10	300	A	9990	–	–	–	–	–	9990	99.90	2.466	247	
		AS4	20	8	300	A	10940	–	–	–	–	–	10940	87.52	2.466	216	
		AS5	20	1	AS SHOWN	A	9900	–	–	–	–	–	9900	9.90	2.466	25	
		AS6	16	9	300	A	10040	–	–	–	–	–	10040	90.36	1.579	143	
		AS7	16	7	300	A	10940	–	–	–	–	–	10940	76.58	1.579	121	
		AS8	20	1	AS SHOWN	A	10940	–	–	–	–	–	10940	10.94	2.466	27	
		AS9	16	34	300	B	4900	200	–	–	–	–	5100	173.40	1.579	274	
		AS10	25	4	AS SHOWN	C	2000	3000	–	–	–	–	5000	20.00	3.854	78	
		AS11	16	2	300	B	3100	200	–	–	–	–	3300	6.60	1.579	11	
		AS12	25	2	AS SHOWN	A	10940	–	–	–	–	–	10940	21.88	3.854	85	
		AS13	16	38	300	D	400	500	200	700	–	–	1800	68.40	1.579	109	
TOTAL	17.57													GRADE 40 TOTAL = 658 kgs. GRADE 60 TOTAL = 2,094 kgs.			

JICA
JAPAN INTERNATIONAL COOPERATION AGENCY
KEI KATAHIRA & ENGINEERS INTERNATIONAL
YEC YACHIYO ENGINEERING CO., LTD.

	DATE	SIGNATURE	
DESIGNED	10/8/02	R. P. GONZALES	A. P. GONZALES PJHL – PMO
CHECKED	10/11/02	K. KOBAYASHI	Submitted By: A. P. GONZALES
SUBMITTED	10/16/02	K. KOBAYASHI TEAM LEADER	DANILO C. TRAJANO Project Director

REPUBLIC OF THE PHILIPPINES
DEPARTMENT OF PUBLIC WORKS AND HIGHWAYS

BUREAU OF DESIGN		OFFICE OF THE SECRETARY	
Reviewed By:	Recommended By:	Recommended By: (See cover sheet for Signature)	Approved By: (See cover sheet for Signature/Approval)
ADRIANO M. DOROY Chief, Bridges Division	GILBERTO S. REYES Director IV (OIC)	MANUEL M. BONDAN Undersecretary	SIMEON A. DATUMANONG Secretary

PROJECT AND LOCATION :
THE DETAILED DESIGN STUDY ON UPGRADING INTER-URBAN HIGHWAY SYSTEM ALONG THE PAN-PHILIPPINE HIGHWAY (Plaridel, Cabanatuan and San Jose Bypasses)
CABANATUAN BYPASS - CONTRACT PACKAGE I

SCALE :
AS SHOWN
FULL SIZE A1

SHEET CONTENTS :
BRIDGE NO. 2
APPROACH SLAB PLAN, SECTION & DETAIL
(ULTIMATE STAGE)

SHEET NO. :
B2-10

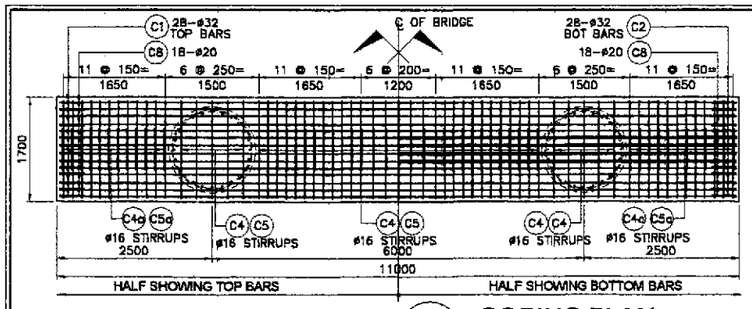

1 COPING PLAN
SCALE 1:50

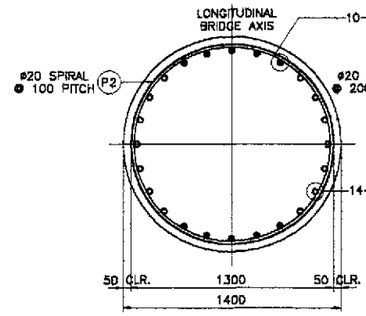

6 SECTION
SCALE 1:20

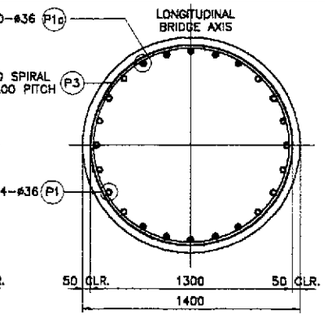

7 SECTION
SCALE 1:20

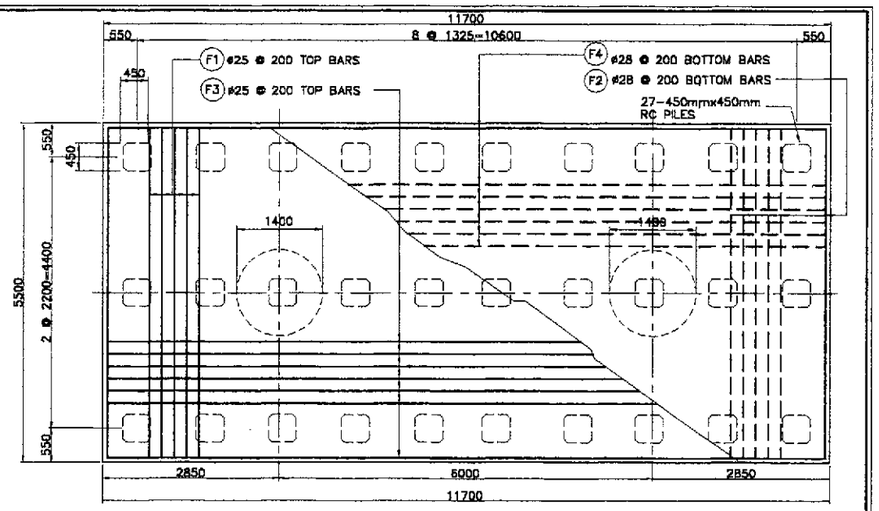

9 FOOTING PLAN
SCALE 1:50

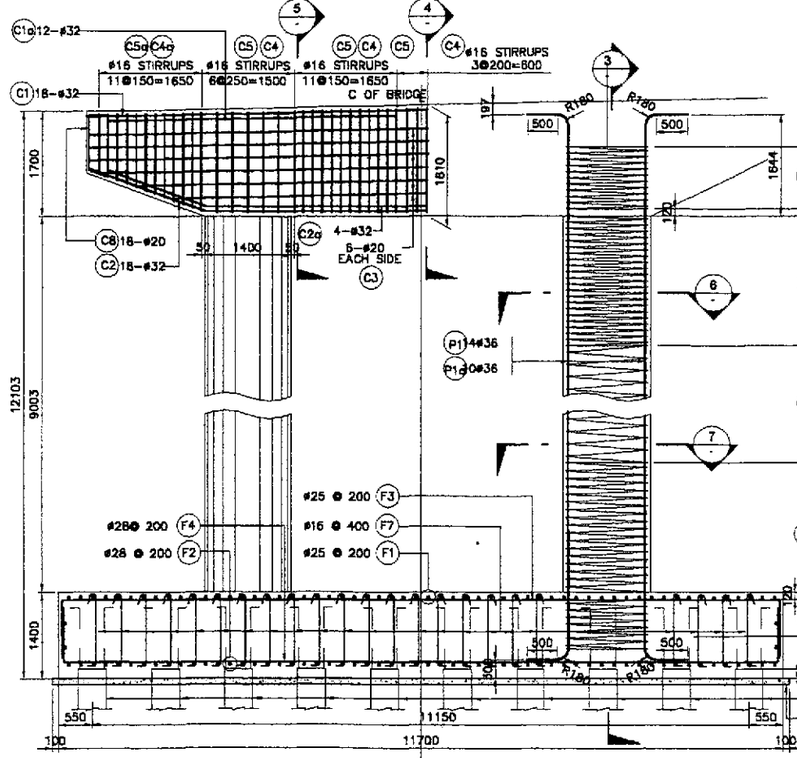

2 ELEVATION
SCALE 1:50

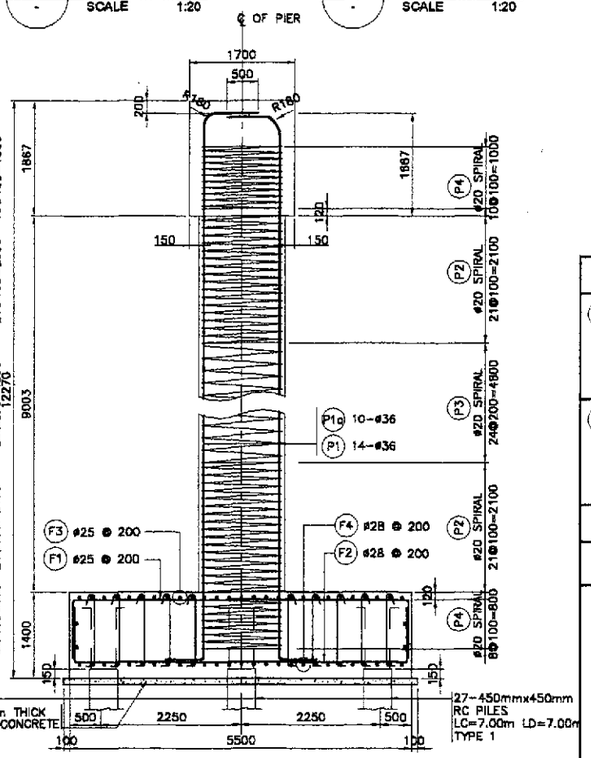

3 SECTION
SCALE 1:50

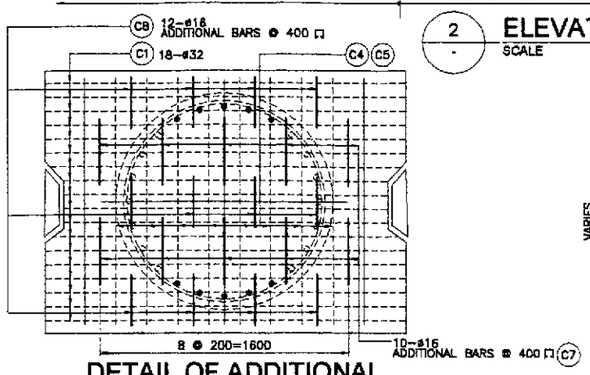

8 DETAIL OF ADDITIONAL REINFORCEMENT @ PIER
SCALE 1:20

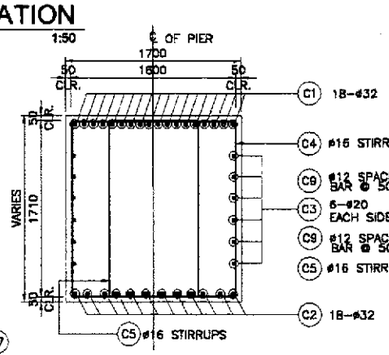

4 SECTION
SCALE 1:30

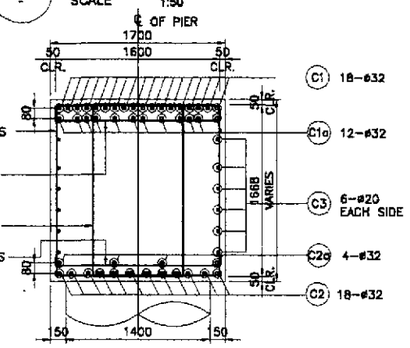

5 SECTION
SCALE 1:30

BAR BENDING DIAGRAM

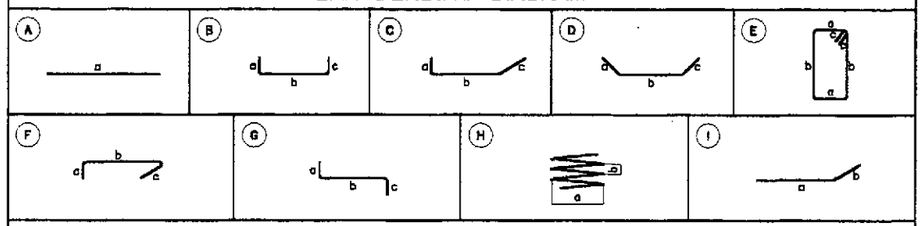

SCHEDULE OF REINFORCEMENT FOR ONE PIER

LOCATION	CONCRETE VOLUME (m^3)	BAR MARK	BAR SIZE	QTY.	SPACING	BAR SHAPE	DIMENSIONS (mm) OUT TO OUT a	b	c	d	LENGTH EACH BAR (mm)	TOTAL LENGTH (m)	UNIT WT. (kg/m)	TOTAL WEIGHT (kg)	REBAR RATIO (kg/m^3)
COPING	31.36	C1	32	18	AS SHOWN	A	10900	–	–	–	10900	196.20	6.313	1239	170.51
		C1a	32	24	AS SHOWN	A	4500	–	–	–	4500	108.00	6.313	682	
		C2	32	18	AS SHOWN	D	2000	7300	2000	–	11300	203.00	6.313	1285	
		C2a	32	8	AS SHOWN	I	1800	3200	–	–	5000	40.00	6.313	253	
		C3	20	6	AS SHOWN	A	10900	–	–	–	10900	65.40	2.466	162	
		C3a	20	6	AS SHOWN	A	9500	–	–	–	9500	57.00	2.466	141	
		C4	16	41	150	E	1600	1725	150	–	6950	284.95	1.579	450	
		C4a	16	22	150	E	1600	1425	150	–	6350	139.70	1.579	221	
		C5	16	41	150	E	900	1725	150	–	5550	227.55	1.579	360	
		C5a	16	22	150	E	900	1425	150	–	4950	108.90	1.579	172	
		C6	12	40	150	B	150	1600	150	–	1900	76.00	0.888	68	
		C7	20	36	AS SHOWN	C	350	900	350	–	1600	57.60	2.466	143	
		C8a	16	24	400	B	330	1700	330	–	2360	56.64	1.579	90	
		C8b	16	20	400	B	430	1700	430	–	2560	51.20	1.579	81	
COLUMN	22.64	P1	36	28	AS SHOWN	B	600	9950	600	–	11150	312.20	7.991	2495	255.72
		P1c	36	20	AS SHOWN	G	600	9950	600	–	11150	223.00	7.991	1782	
		P2	20	84	100	H	1300	100	–	–	4084	334.89	2.466	826	
		P3	20	48	200	H	1300	200	–	–	4084	190.69	2.466	323	
		P4	20	36	100	H	1300	100	–	–	4084	147.03	2.466	363	
FOOTING	77.22	F1	25	59	200	B	925	5350	–	–	7200	424.80	3.854	1638	102.65
		F2	28	59	200	B	925	5350	–	–	7200	424.80	4.833	2054	
		F3	25	28	200	B	925	11550	–	–	13400	375.20	3.854	1447	
		F4	28	28	200	B	925	11550	–	–	13400	375.20	4.833	1814	
		F5	16	2	AS SHOWN	A	11550	–	–	–	11550	23.10	1.579	37	
		F6	16	2	AS SHOWN	A	5350	–	–	–	5350	10.70	1.579	17	
		F7	16	364	400	F	200	1250	150	–	1600	582.40	1.579	920	
TOTAL	136.77														

GRADE 40 TOTAL = 2,415 kgs.
GRADE 60 TOTAL = 16,647 kgs.

JICA
JAPAN INTERNATIONAL COOPERATION AGENCY
KEI KATAHIRA & ENGINEERS INTERNATIONAL
YEO YACHIYO ENGINEERING CO., LTD.

	DATE	SIGNATURE
DESIGNED	10/5/02	A. P. GONZALES
CHECKED	10/5/02	
SUBMITTED	10/16/02	M. IKUDA TEAM LEADER

REPUBLIC OF THE PHILIPPINES
DEPARTMENT OF PUBLIC WORKS AND HIGHWAYS

PUHL – PMO	BUREAU OF DESIGN		OFFICE OF THE SECRETARY	
Submitted By:	Reviewed By:	Recommended By:	Recommended By: (See cover sheet for Signature)	Approved By: (See cover sheet for Signature/Approval)
DANILO C. TRAJANO Project Director	ADRIANO M. DOROY Chief, Bridges Division	GILBERTO S. REYES Director IV (OIC)	MANUEL M. BONOAN Undersecretary	SIMEON A. DATUMANONG Secretary

PROJECT AND LOCATION :
THE DETAILED DESIGN STUDY ON UPGRADING INTER-URBAN HIGHWAY SYSTEM ALONG THE PAN-PHILIPPINE HIGHWAY (Plaridel, Cabanatuan and San Jose Bypasses)
CABANATUAN BYPASS - CONTRACT PACKAGE I

SCALE :
AS SHOWN
FULL SIZE A1

SHEET CONTENTS :
BRIDGE NO. 2
PIER P1 AND PIER P2
BAR ARRANGEMENT
(ULTIMATE STAGE)

SHEET NO. :
B2-12

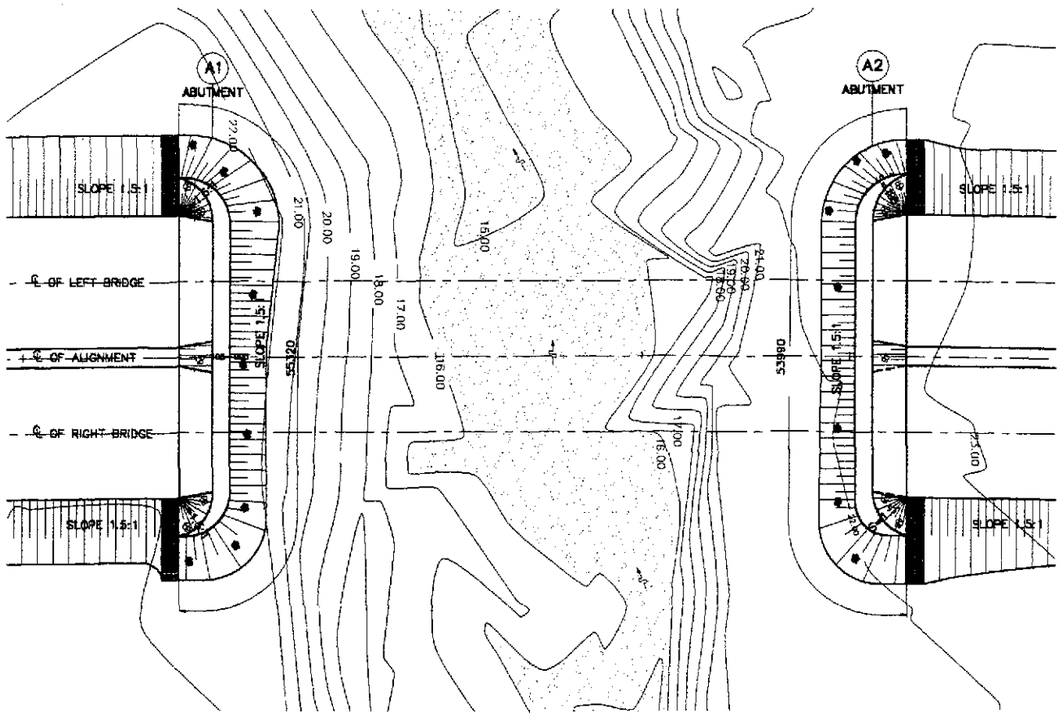

1A PLAN
SCALE 1:300

GENERAL NOTES:

1. GROUTED RIPRAP (250mm–300mmDIA.) SHALL BE USED FOR THE FACING AND SHALL BE CAREFULLY HANDLAID WITH THE LONGEST DIMENSIONS PERPENDICULAR TO THE SLOPE AND FIRMLY BEDDED INTO THE SLOPE AND ADJACENT TO THE ADJOINING BOULDERS SPACED BETWEEN THE BOULDERS. THE SPACE BETWEEN THE BOULDERS SHALL BE COMPLETELY FILLED WITH MORTAR. THE OUTSIDE SURFACE OF THE BOULDERS SHALL BE LEFT EXPOSED AND THE SURFACE OF THE MORTAR SHALL BE SWEPT WITH A STIFF BROOM.

2. WIRE MESH GABIONS/MATTRESS
   A. WIRE–THE WIRE MESH SHALL BE MADE OF GALVANIZED STEEL HAVING A MINIMUM SIZE OF 3.40mm DIAMETER (U.S. WIRE GAUGE NO.11) THE TENSILE STRENGTH OF THE WIRE HALL BE IN THE RANGE OF 413.70 TO 586.10 MPa. (60,000 TO 85,000 Psi) THE MINIMUM ZINC COATING OF THE WIRE SHALL BE 22.70 GRAMS PER 0.0929m2 OF UNCOATED WIRE SURFACES AS DETERMINED BY TEST CONDUCTED IN ACCORDANCE WITH AASHTO T85.
   B. ROCK FILL – ROCK USED IN THE GABIONS SHALL CONSIST OF HARD, DURABLE ROCK PIECES THAT WILL NOT DETERIORATE WHEN SUBMERGED IN WATER OR EXPOSED TO SEVERE WEATHER CONDITIONS. ROCK PIECES SHALL BE GENERALLY UNIFORMLY GRADED IN SIZES RANGING FROM 100mm TO 200mm. FILLED GABIONS SHALL HAVE A MINIMUM DENSITY OF 1,400Kg./m3. VOIDS SHALL BE EVENLY DISTRIBUTED.
   THE ROCKS SHALL MEET THE REQUIREMENTS OF AASHTO M83 EXCEPT THAT THE SODIUM SULFATE SOUNDNESS LOSS SHALL NOT EXCEED 9% AFTER 5 CYCLES.

3. GEOTEXTILE
   THE FOLLOWING SPECIFICATIONS ARE REQUIRED:
   1. POLYESTER OR POLYPROPELINE – 100%
   2. MECHANICALLY BONDED/HEAT BONDED
   3. NON–WOVEN
   4. EFFECTIVE OPENING SIZE – 110 MICRONS (MAX.)
   5. THICKNESS UNDER PRESSURE – 0.80mm (MIN.)
   6. WEIGHT – 200g/sq. m. (MIN.)
   7. CBR PUNCTURE STRENGTH – 400N (MIN.)
   8. MULTI–DIRECTIONAL TENSILE STRENGTH – 13KN/m

4. GRAVEL FILTER SHALL BE COARSE AGGREGATES MATERIALS WHICH SATISFY THE REQUIREMENTS FOR ITEM 405, STRUCTURAL CONCRETE, GRADING B OF TABLE 405.1 AS REVISED.

5. RUBBLE CONCRETE SHALL BE CLASS "B" (1:2.5:5) MIX CONCRETE WITH BOULDERS EMBEDDED THEREIN. BOULDERS 250–300mmø SHALL BE CAREFULLY HAND–LAID WITHIN THE CONCRETE SECTION. THE BOULDERS SHALL BE THOROUGHLY INCORPORATED INTO THE CONCRETE MASS WITH A COVER OF 30mm AND NOT LESS THAN 30mm APART. THE RUBBLE CONCRETE SHALL BE COMPOSED OF 40 % CLASS "B" CONCRETE AND 60 % BOULDERS.

6. NO CONCRETING UNDER WATER SHALL BE PERMITTED.

7. PROVIDE 1.0 m. BERM WHEN HEIGHT (H) IS > 4.0 m.

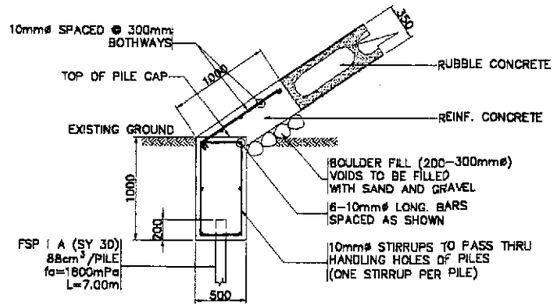

4 CAPPING AND SHEET PILE CONNECTION
SCALE 1:30

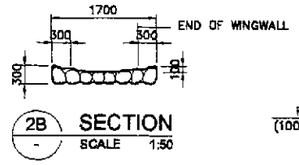

2B SECTION
SCALE 1:50

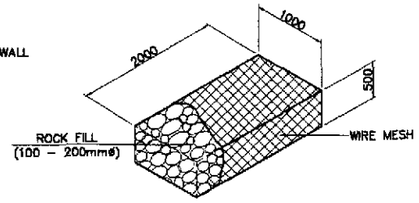

3 GABION DETAIL
SCALE 1:50

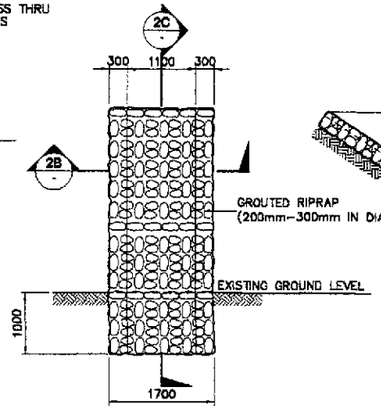

2A ELEVATION
SCALE 1:50

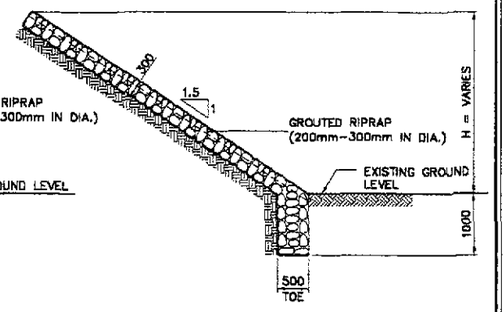

2C SECTION
SCALE 1:50

2 TYPICAL SIDE DRAIN DETAIL
SCALE AS SHOWN

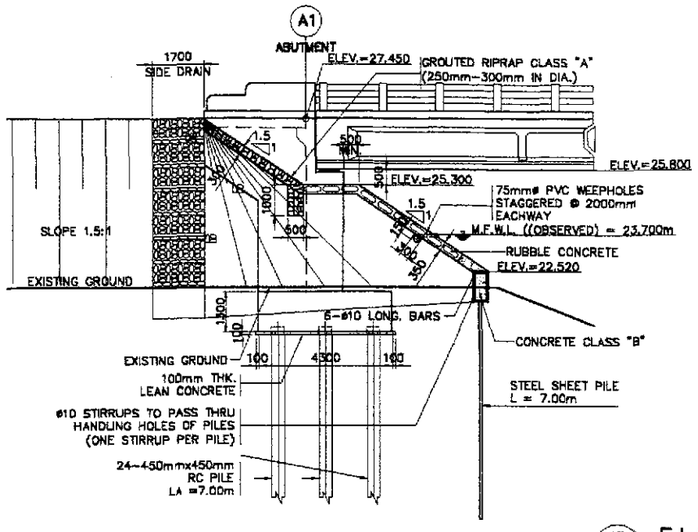

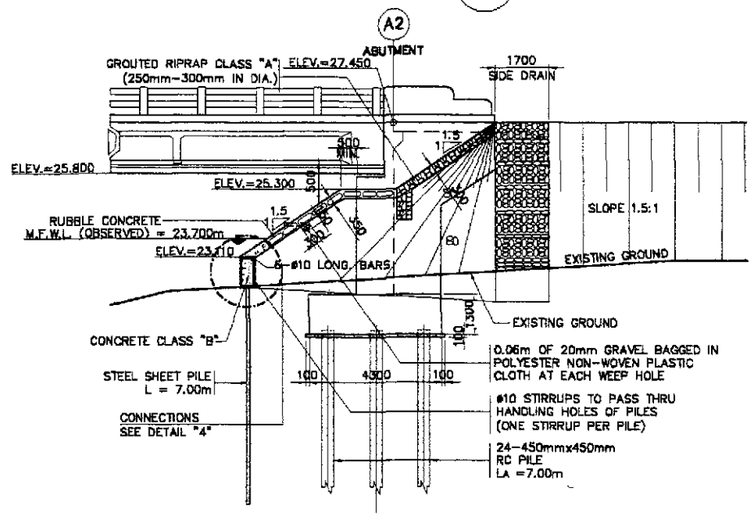

1B ELEVATION
SCALE 1:100

1 ABUTMENT SLOPE PROTECTION
SCALE AS SHOWN

VELOCITY (m/sec)	ROCK SIZE (mm) VERY TURBULENT FLOW	ROCK SIZE (mm) SMOOTH FLOW
1.00	40	–
1.50	135	–
2.00	170	–
2.50	255	137
3.00	370	197
3.50	515	270
4.00	690	350
4.50	825	425
5.00	>900	590

PER ABUTMENT

LOCATION	SIZES	QUANTITY ABUT. A1	QUANTITY ABUT. A2
CONC. CLASS "B"	1000 x 500 x LENGTH	14.34 cu. m.	13.55 cu. m.
REBAR	ø10, GRADE 40	217.00 kgs.	204.00 kgs.
RUBBLE CONCRETE	250mm–300mm IN DIA.	50.87 cu. m.	38.63 cu. m.
SHEET PILE	85 x 400 x 8mm THK.	63.00 pcs.	59.00 pcs.
SIDE DRAIN	200mm–300mm IN DIA.	5.53 cu. m.	5.25 cu. m.
GROUTED RIPRAP	250mm–300mm IN DIA.	12.09 cu. m.	12.10 cu. m.

JICA
JAPAN INTERNATIONAL COOPERATION AGENCY
KEI KATAHIRA & ENGINEERS INTERNATIONAL
YEC YACHIYO ENGINEERING CO., LTD.

	DATE	SIGNATURE
DESIGNED	10/15/02	A. P. GONZALES
CHECKED	10/15/02	[illegible]
SUBMITTED	10/16/02	[illegible] TEAM LEADER

REPUBLIC OF THE PHILIPPINES
DEPARTMENT OF PUBLIC WORKS AND HIGHWAYS

FUHL – PMO	BUREAU OF DESIGN		OFFICE OF THE SECRETARY	
Submitted By:	Reviewed By:	Recommended By:	Recommended By: (See cover sheet for Signature)	Approved By: (See cover sheet for Signature/Approval)
DANILO C. TRAJANO, Project Director	PERFECTO L. ZAPLAN JR., Chief, Hydraulics Division (OIC)	GILBERTO S. REYES, Director IV (OIC)	MANUEL M. BONOAN, Undersecretary	SIMEON A. DATUMANONG, Secretary

PROJECT AND LOCATION :
THE DETAILED DESIGN STUDY ON UPGRADING INTER-URBAN HIGHWAY SYSTEM ALONG THE PAN-PHILIPPINE HIGHWAY (Plaridel, Cabanatuan and San Jose Bypasses)
CABANATUAN BYPASS - CONTRACT PACKAGE I

SCALE : AS SHOWN
FULL SIZE A1

SHEET CONTENTS :
BRIDGE NO. 2
ABUTMENT PROTECTION AND SIDE DRAIN DETAILS (ULTIMATE STAGE)

SHEET NO. : B2-14