# DRAINAGE

# SURFACE DRAINAGE SCHEDULE

| LEFT SIDE | | | | | RIGHT SIDE | | | | |
|---|---|---|---|---|---|---|---|---|---|
| STATION | | LOCATION | LENGTH | TYPE OF STRUCTURE | STATION | | LOCATION | LENGTH | TYPE OF STRUCTURE |
| FROM | TO | | (m) | | FROM | TO | | (m) | |
| CIM | CIM | | | | CIM | CIM | | | |
| 100+600 | | C | | CIM | | | | | |
| 100+600 | | C TO S | 12 | 460 mm ø RCPC | | | | | |
| 100+640 | | C | | CIM | | | | | |
| 100+640 | | C TO S | 12 | 460 mm ø RCPC | | | | | |
| 100+680 | | C | | CIM | | | | | |
| 100+680 | | C TO S | 12 | 460 mm ø RCPC | | | | | |
| 100+720 | | C | | CIM | | | | | |
| 100+720 | | C TO S | 12 | 460 mm ø RCPC | | | | | |
| 100+740 | EXISTING 1–910 mm RCPC x 34.0m. | | | | | | | | |
| 100+760 | | C | | CIM | | | | | |
| 100+760 | | C TO S | 12 | 460 mm ø RCPC | | | | | |
| 100+800 | | C | | CIM | | | | | |
| 100+800 | | C TO S | 12 | 460 mm ø RCPC | | | | | |
| 100+880 | EXISTING 3–2.40 x 1.80 RCBC x 33.20 | | | | | | | | |
| 100+900 | | C | | CIM | | | | | |
| 100+900 | | C TO S | 12 | 460 mm ø RCPC | | | | | |
| 100+940 | | C | | CIM | | | | | |
| 100+940 | | C TO S | 12 | 460 mm ø RCPC | | | | | |
| 100+980 | | C | | CIM | | | | | |
| 100+980 | | C TO S | 12 | 460 mm ø RCPC | | | | | |
| 101+110 | EXISTING 1–910mm RCPC x 36.0m. | | | | | | | | |
| 101+180 | | C | | CIM | | | | | |
| 101+180 | | C TO S | 12 | 460 mm ø RCPC | | | | | |
| 101+220 | | C | | CIM | | | | | |
| 101+220 | | C TO S | 12 | 460 mm ø RCPC | | | | | |
| 101+260 | | C | | CIM | | | | | |
| 101+260 | | C TO S | 12 | 460 mm ø RCPC | | | | | |
| 101+300 | | C | | CIM | | | | | |
| 101+300 | | C TO S | 12 | 460 mm ø RCPC | | | | | |
| 101+334 | EXISTING 1–910mm RCPC x 40.0m. | | | | | | | | |
| 101+340 | | C | | CIM | | | | | |
| 101+340 | | C TO S | 12 | 460 mm ø RCPC | | | | | |
| 101+380 | | C | | CIM | | | | | |
| 101+380 | | C TO S | 12 | 460 mm ø RCPC | | | | | |
| 101+420 | | C | | CIM | | | | | |
| 101+420 | | C TO S | 12 | 460 mm ø RCPC | | | | | |
| 101+453 | EXISTING 2–910mm RCPC x 32.0m. | | | | | | | | |
| 101+520 | | C | | CIM | | | | | |
| 101+520 | | C TO S | 12 | 460 mm ø RCPC | | | | | |
| 101+524 | EXISTING 2–1220mm RCPC x 28.0m. | | | | | | | | |
| 101+560 | | C | | CIM | | | | | |
| 101+560 | | C TO S | 12 | 460 mm ø RCPC | | | | | |
| 101+640 | | C | | CIM | | | | | |
| 101+640 | | C TO S | 12 | 460 mm ø RCPC | | | | | |
| 101+680 | | C | | CIM | | | | | |
| 101+680 | | C TO S | 12 | 460 mm ø RCPC | | | | | |
| 101+720 | | C | | CIM | | | | | |
| 101+720 | | C TO S | 12 | 460 mm ø RCPC | | | | | |
| 101+760 | | C | | CIM | | | | | |
| 101+760 | | C TO S | 12 | 460 mm ø RCPC | | | | | |
| 101+770 | EXISTING 2–1220mm RCPC x 26.0m. | | | | | | | | |
| 101+790 | | C | | CIM | | | | | |
| 101+790 | | C TO S | 12 | 460 mm ø RCPC | | | | | |
| 101+820 | | C | | CIM | | | | | |
| 101+820 | | C TO S | 12 | 460 mm ø RCPC | | | | | |

| LEFT SIDE | | | | | RIGHT SIDE | | | | |
|---|---|---|---|---|---|---|---|---|---|
| STATION | | LOCATION | LENGTH | TYPE OF STRUCTURE | STATION | | LOCATION | LENGTH | TYPE OF STRUCTURE |
| FROM | TO | | (m) | | FROM | TO | | (m) | |
| CIM | CIM | | | | CIM | CIM | | | |
| 101+860 | | C | | CIM | | | | | |
| 101+860 | | C TO S | 12 | 460 mm ø RCPC | | | | | |
| 101+900 | | C | | CIM | | | | | |
| 101+900 | | C TO S | 12 | 460 mm ø RCPC | | | | | |
| 101+940 | | C | | CIM | | | | | |
| 101+925 | EXISTING 2–1220mm RCPC x 34.0m. | | | | | | | | |
| 101+940 | | C TO S | 12 | 460 mm ø RCPC | | | | | |
| 102+020 | | C | | CIM | | | | | |
| 102+020 | | C TO S | 12 | 460 mm ø RCPC | | | | | |
| 102+060 | | C | | CIM | | | | | |
| 102+060 | | C TO S | 12 | 460 mm ø RCPC | | | | | |
| 102+100 | | C | | CIM | | | | | |
| 102+100 | | C TO S | 12 | 460 mm ø RCPC | | | | | |
| 102+130 | | C | | CIM | | | | | |
| 102+130 | | C TO S | 12 | 460 mm ø RCPC | | | | | |
| 102+160 | | C | | CIM | | | | | |
| 102+160 | | C TO S | 12 | 460 mm ø RCPC | | | | | |
| 102+165 | EXISTING 1–1070mm RCPC x 31.0m. | | | | | | | | |
| 102+200 | | C | | CIM | | | | | |
| 102+200 | | C TO S | 12 | 460 mm ø RCPC | | | | | |
| 102+240 | | C | | CIM | | | | | |
| 102+240 | | C TO S | 12 | 460 mm ø RCPC | | | | | |
| 102+280 | | C | | CIM | | | | | |
| 102+280 | | C TO S | 12 | 460 mm ø RCPC | | | | | |
| 102+320 | EXISTING 1–910mm RCPC x 32.0m. | | | | | | | | |
| 102+320 | | C | | CIM | | | | | |
| 102+320 | | C TO S | 12 | 460 mm ø RCPC | | | | | |
| 102+360 | | C | | CIM | | | | | |
| 102+360 | | C TO S | 12 | 460 mm ø RCPC | | | | | |
| 102+440 | | C | | CIM | | | | | |
| 102+440 | | C TO S | 12 | 460 mm ø RCPC | | | | | |
| 102+470 | EXISTING 1–910mm RCPC x 30.0m. | | | | | | | | |
| 102+480 | | C | | CIM | | | | | |
| 102+480 | | C TO S | 12 | 460 mm ø RCPC | | | | | |
| 102+520 | | C | | CIM | | | | | |
| 102+520 | | C TO S | 12 | 460 mm ø RCPC | | | | | |
| 102+560 | | C | | CIM | | | | | |
| 102+560 | | C TO S | 12 | 460 mm ø RCPC | | | | | |
| 102+600 | | C | | CIM | | | | | |
| 102+600 | | C TO S | 12 | 460 mm ø RCPC | | | | | |
| 102+640 | | C | | CIM | | | | | |
| 102+640 | | C TO S | 12 | 460 mm ø RCPC | | | | | |
| 102+654 | EXISTING 1–1220mm RCPC x 26.0m. | | | | | | | | |
| 102+686 | EXISTING 1–1220mm RCPC x 26.0m. | | | | | | | | |
| 102+690 | | C | | CIM | | | | | |
| 102+690 | | C TO S | 12 | 460 mm ø RCPC | | | | | |
| 102+720 | | C | | CIM | | | | | |
| 102+720 | | C TO S | 12 | 460 mm ø RCPC | | | | | |
| 102+750 | | C | | CIM | | | | | |
| 102+750 | | C TO S | 12 | 460 mm ø RCPC | | | | | |
| 102+790 | | C | | CIM | | | | | |
| 102+790 | | C TO S | 12 | 460 mm ø RCPC | | | | | |
| 102+830 | | C | | CIM | | | | | |
| 102+830 | | C TO S | 12 | 460 mm ø RCPC | | | | | |
| 102+870 | | C | | CIM | | | | | |

LEGEND:

M – Center Median
O – Outer Separator
S – Sidewalk
RCPC – Reinforced Concrete Pipe Culvert
CIM – Catch Inlet Manhole
MH – Manhole

JICA
JAPAN INTERNATIONAL COOPERATION AGENCY

KEI KATAHIRA & ENGINEERS INTERNATIONAL
YEC YACHIYO ENGINEERING CO., LTD.

| | DATE | SIGNATURE |
|---|---|---|
| DESIGNED | 10/5/02 | F. STA MARIA |
| CHECKED | 10/15/02 | K. HIRAI |
| SUBMITTED | 10/16/02 | M. KUCHI |
| | | TEAM LEADER |

REPUBLIC OF THE PHILIPPINES
DEPARTMENT OF PUBLIC WORKS AND HIGHWAYS

| PJHL – PMO | BUREAU OF DESIGN | | OFFICE OF THE SECRETARY | |
|---|---|---|---|---|
| Submitted By: | Reviewed By: | Recommended By: | Recommended By: (See cover sheet for Signature) | Approved By: (See cover sheet for Signature/Approved) |
| DANILO C. TRAJANO | JOSEFINA M. ALAGAR | GILBERTO S. REYES | MANUEL M. BONDAN | SIMEON A. DATUMANONG |
| Project Director | Chief, Highways Division | OIC, Director IV | Undersecretary | Secretary |

PROJECT AND LOCATION :
THE DETAILED DESIGN STUDY ON UPGRADING INTER-URBAN HIGHWAY SYSTEM ALONG THE PAN-PHILIPPINE HIGHWAY (Plaridel, Cabanatuan and San Jose Bypasses)
CABANATUAN BYPASS - CONTRACT PACKAGE I

SCALE : FULL SIZE A1

SHEET CONTENTS : SCHEDULE OF SURFACE DRAINAGE

SHEET NO. : DG-01

# SURFACE DRAINAGE SCHEDULE

| LEFT SIDE | | | | | RIGHT SIDE | | | | |
|---|---|---|---|---|---|---|---|---|---|
| STATION | | LOCATION | LENGTH | TYPE OF STRUCTURE | STATION | | LOCATION | LENGTH | TYPE OF STRUCTURE |
| FROM | TO | | (m) | | FROM | TO | | (m) | |
| | | | | | | | | | |
| 102+870 | | C TO S | 12 | 460 mm ø RCPC | | | | | |
| 102+910 | | C | | CIM | | | | | |
| 102+910 | | C TO S | 12 | 460 mm ø RCPC | | | | | |
| 103+194 | | EXISTING 1-910mm RCPC x 28.0m. | | | | | | | |
| 103+304 | | EXISTING 1-910mm RCPC x 28.0m. | | | | | | | |
| 103+550 | | EXISTING 1-910mm RCPC x 32.0m. | | | | | | | |
| 103+565 | | EXISTING 1-910mm RCPC x 32.0m. | | | | | | | |
| 103+664 | | EXISTING 1-910mm RCPC x 29.0m. | | | | | | | |
| 103+804 | | EXISTING 1-910mm RCPC x 42.0m. | | | | | | | |
| 103+894 | | EXISTING 1-3.0 x 2.40mmø RCBC x 26.0m. | | | | | | | |
| 104+039 | | EXISTING 1-910mm RCPC x 32.0m. | | | | | | | |
| 104+055 | | EXISTING 2-910mm RCPC x 32.0m. | | | | | | | |
| 104+194 | | EXISTING 2-910mm RCPC x 30.0m. | | | | | | | |
| 104+294 | | EXISTING 2-1220mm RCPC x 28.0m. | | | | | | | |
| 104+334 | | EXISTING 2-1220mm RCPC x 27.0m. | | | | | | | |
| 104+580 | | EXISTING 2-910mm RCPC x 29.0m. | | | | | | | |
| 104+792 | | EXISTING 1-1220mm RCPC x 38.0m. | | | | | | | |
| 104+815 | | EXISTING 1-1220mm RCPC x 35.0m. | | | | | | | |
| 105+305 | | EXISTING 1-910mm RCPC x 36.0m. | | | | | | | |
| 105+325 | | EXISTING 1-910mm RCPC x 32.0.m. | | | | | | | |
| 105+724 | | EXISTING 1-910mm RCPC x 35.0m. | | | | | | | |
| 105+954 | | EXISTING 1-910mm RCPC x 35.0m. | | | | | | | |
| 106+175 | | EXISTING 1-910mm RCPC x 40.0m. | | | | | | | |
| 106+206 | | EXISTING 1-1070mm RCPC x 44.0m. | | | | | | | |
| 106+220 | | EXISTING 1-910mm RCPC x 43.0m. | | | | | | | |
| 106+364 | | EXISTING 1-910mm RCPC x 35.0m. | | | | | | | |
| 106+509 | | EXISTING 1-910mm RCPC x 35.0m. | | | | | | | |
| 106+597 | | EXISTING 1-1220mm RCPC x 35.0m. | | | | | | | |
| 106+610 | | EXISTING 1-910mm RCPC x 35.0.m. | | | | | | | |
| 106+800 | | EXISTING 1-1070mm RCPC x 27.0m. | | | | | | | |
| 107+000 | | EXISTING 1-1070mm RCPC x 26.0m. | | | | | | | |
| 107+154 | | EXISTING 1-1070mm RCPC x 33.0m. | | | | | | | |
| 107+280 | | EXISTING 1-910mm RCPC x 27.0m. | | | | | | | |
| 107+494 | | EXISTING 1-1070mm RCPC x 35.0.m. | | | | | | | |
| 107+560 | | EXISTING 2-2.40 x 2.10mmø RCBC x 33.90m. | | | | | | | |
| 107+704 | | EXISTING 1-910mm RCPC x 36.0m. | | | | | | | |
| 107+804 | | EXISTING 1-910mm RCPC x 28.0m. | | | | | | | |
| 108+040 | | EXISTING 1-910mm RCPC x 36.0m. | | | | | | | |
| 108+134 | | EXISTING 1-1220mm RCPC x 61.0m. | | | | | | | |
| 108+165 | | EXISTING 1-910mm RCPC x 43.0m. | | | | | | | |
| 108+300 | | EXISTING 1-910mm RCPC x 31.0m. | | | | | | | |
| 108+500 | | EXISTING 1-910mm RCPC x 26.0m. | | | | | | | |
| 108+582 | | EXISTING 1-910mm RCPC x 26.0m. | | | | | | | |
| 108+594 | | EXISTING 1-1070mm RCPC x 27.0m. | | | | | | | |
| 108+742 | | EXISTING 3-3.0 x 2.75mø RCBC x 33.70 | | | | | | | |
| 108+940 | | EXISTING 1-910mm RCPC | | | | | | | |
| 109+120 | | EXISTING 1-910mm RCPC x 26.00m. | | | | | | | |
| 109+285 | | EXISTING 1-1220mm RCPC x 26.00m. | | | | | | | |
| 109+300 | | EXISTING 1-1070mm RCPC x 26.00m. | | | | | | | |
| 109+534 | | EXISTING 2-1070mm RCPC x 28.00m. | | | | | | | |
| 109+574 | | EXISTING 2-1070mm RCPC x 28.00m. | | | | | | | |
| 109+912 | | EXISTING 1-910mm RCPC x 28.00m. | | | | | | | |

| LEFT SIDE | | | | | RIGHT SIDE | | | | |
|---|---|---|---|---|---|---|---|---|---|
| STATION | | LOCATION | LENGTH | TYPE OF STRUCTURE | STATION | | LOCATION | LENGTH | TYPE OF STRUCTURE |
| FROM | TO | | (m) | | FROM | TO | | (m) | |
| CIM | CIM | | | | CIM | CIM | | | |
| 103+194 | | EXISTING 1-910mm RCPC x 28.0m. | | | | | | | |

LEGEND:

M – Center Median  S – Sidewalk  CIM – Catch Inlet Manhole
O – Outer Separator  RCPC – Reinforced Concrete Pipe Culvert  MH – Manhole

JICA
JAPAN INTERNATIONAL COOPERATION AGENCY
KEI KATAHIRA & ENGINEERS INTERNATIONAL
YEC YACHIYO ENGINEERING CO., LTD.

| | DATE | SIGNATURE |
|---|---|---|
| DESIGNED | 10/15/02 | V. STA. ROSA |
| CHECKED | 10/15/02 | |
| SUBMITTED | 10/16/02 | M. HIKUSHI TEAM LEADER |

REPUBLIC OF THE PHILIPPINES
DEPARTMENT OF PUBLIC WORKS AND HIGHWAYS

| PJHL – PMD | BUREAU OF DESIGN | | OFFICE OF THE SECRETARY | |
|---|---|---|---|---|
| Submitted By: | Reviewed By: | Recommended By: | Recommended By: (See cover sheet for Signature) | Approved By: (See cover sheet for Signature/Approval) |
| DANILO C. TRAJANO | JOSEFINA M. ALAGAR | GILBERTO S. REYES | MANUEL M. BONGAN | SIMEON A. DATUMANONG |
| Project Director | Chief, Highways Division | OIC, Director IV | Undersecretary | Secretary |

PROJECT AND LOCATION :
THE DETAILED DESIGN STUDY ON UPGRADING INTER-URBAN HIGHWAY SYSTEM ALONG THE PAN-PHILIPPINE HIGHWAY (Plaridel, Cabanatuan and San Jose Bypasses)
CABANATUAN BYPASS - CONTRACT PACKAGE I

SCALE : FULL SIZE A1

SHEET CONTENTS : SCHEDULE OF SURFACE DRAINAGE

SHEET NO. : DG-02

## 101+334

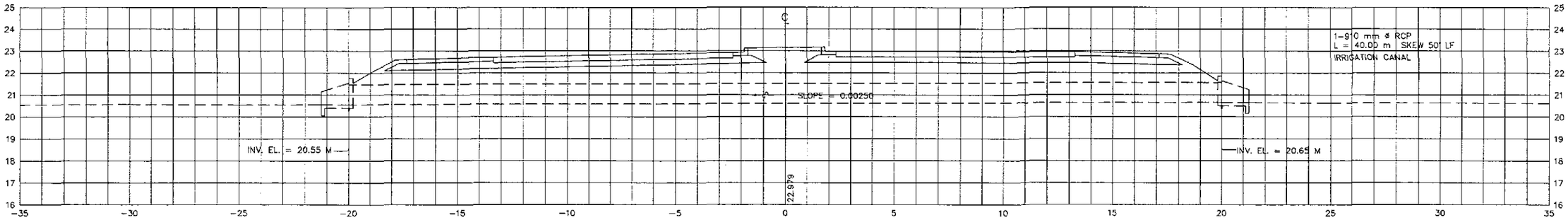


## 101+110

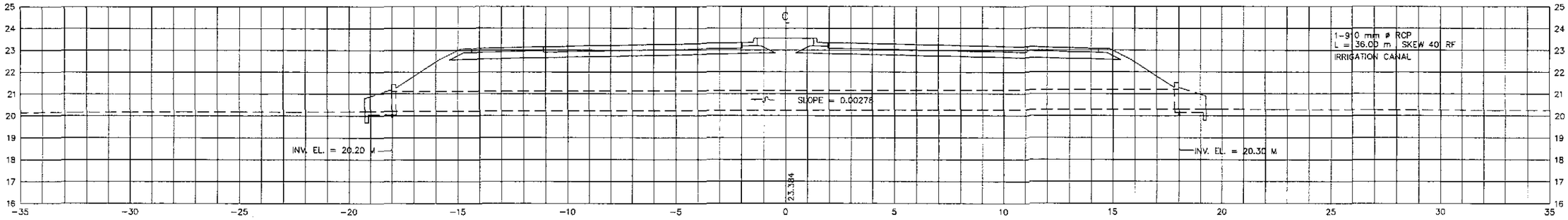


## 100+880

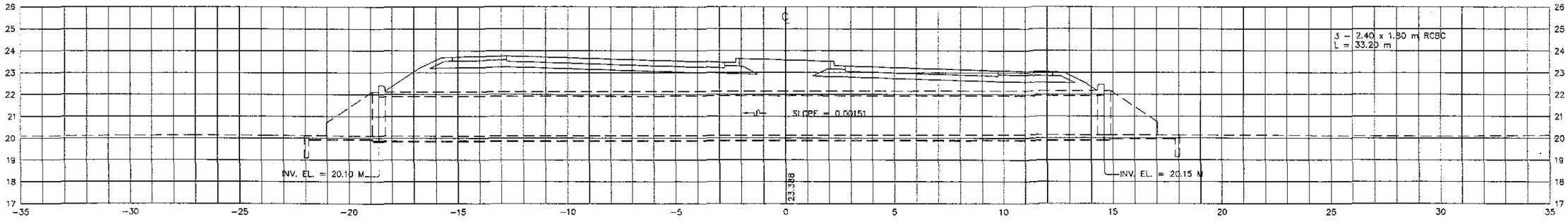


## 100+740

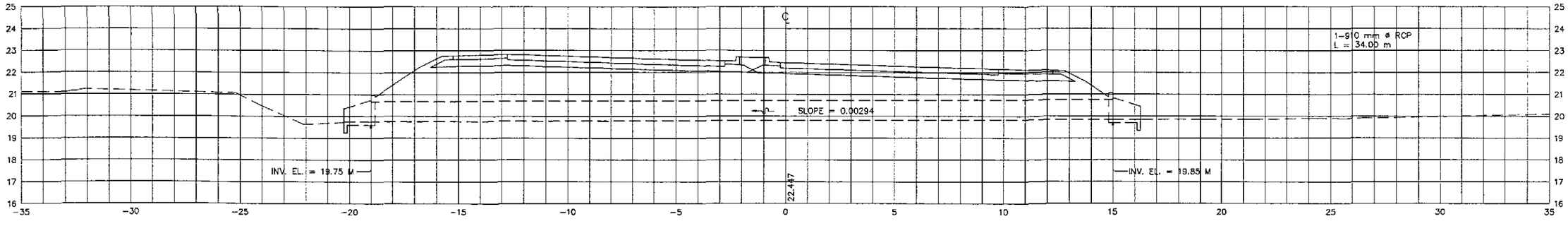


| | | | | | | | |
|---|---|---|---|---|---|---|---|
| JICA JAPAN INTERNATIONAL COOPERATION AGENCY | | DATE | SIGNATURE | REPUBLIC OF THE PHILIPPINES DEPARTMENT OF PUBLIC WORKS AND HIGHWAYS | | | |
| KEI KATAHIRA & ENGINEERS INTERNATIONAL / YEC YACHIYO ENGINEERING CO., LTD. | DESIGNED | 10/15/02 | | PJHL - PMO | BUREAU OF DESIGN | OFFICE OF THE SECRETARY | |
| | CHECKED | 10/15/02 | | Submitted By: | Reviewed By: / Recommended By: | Recommended By: (See cover sheet for Signature) | Approved By: (See cover sheet for Signature/Approval) |
| | SUBMITTED | 10/16/02 | M. KAUCHI TEAM LEADER | DANILO C. TRAJANO Project Director | JOSEFINA M. ALAGAR Chief, Highways Division / GILBERTO S. REYES OIC, Director IV | MANUEL M. BONGAN Undersecretary | SIMEON A. DATUMANONG Secretary |

| PROJECT AND LOCATION : | SCALE : | SHEET CONTENTS : | SHEET NO. : |
|---|---|---|---|
| THE DETAILED DESIGN STUDY ON UPGRADING INTER-URBAN HIGHWAY SYSTEM ALONG THE PAN-PHILIPPINE HIGHWAY (Plaridel, Cabanatuan and San Jose Bypasses) | 1:100 | DRAINAGE CROSS-SECTION ALONG BYPASS ( ULTIMATE STAGE ) STA. 100+740 - STA. 101+334 | DC-01 |
| CABANATUAN BYPASS - CONTRACT PACKAGE I | FULL SIZE A1 | | |

101+925

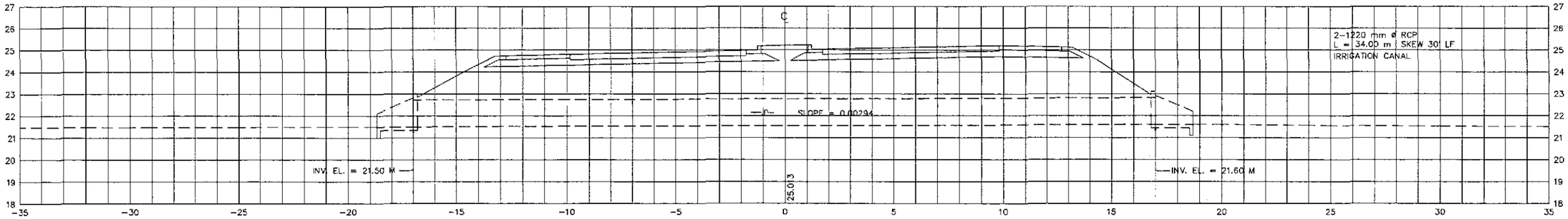


101+770

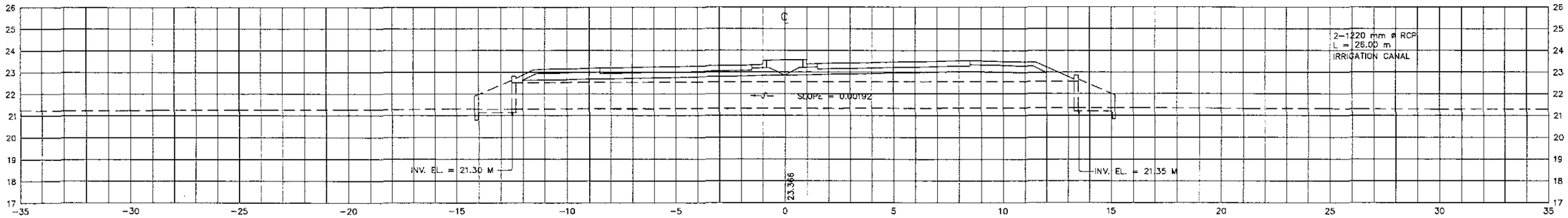


101+524

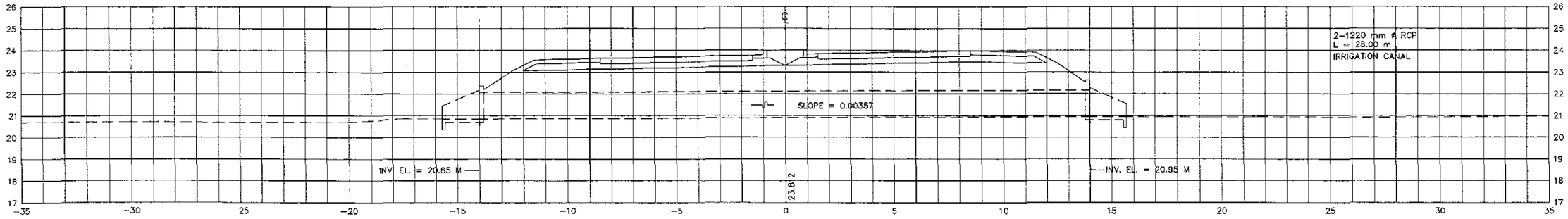


101+453

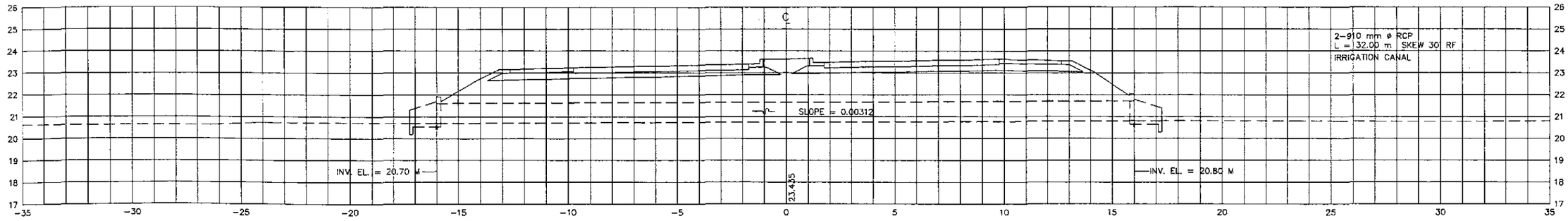


JICA
JAPAN INTERNATIONAL COOPERATION AGENCY

KEI KATAHIRA & ENGINEERS INTERNATIONAL
YEC YACHIYO ENGINEERING CO., LTD.

| | DATE | SIGNATURE |
|---|---|---|
| DESIGNED | 10/15/02 | F. STA. MARIA |
| CHECKED | 10/15/02 | H. CALDERON |
| SUBMITTED | 10/16/02 | M. KIKUCHI, TEAM LEADER |

REPUBLIC OF THE PHILIPPINES
DEPARTMENT OF PUBLIC WORKS AND HIGHWAYS

| PJHL – PMO | BUREAU OF DESIGN | | OFFICE OF THE SECRETARY | |
|---|---|---|---|---|
| Submitted By: | Reviewed By: | Recommended By: | Recommended By: (See cover sheet for Signature) | Approved By: (See cover sheet for Signature/Approval) |
| DANILO C. TRAJANO, Project Director | JOSEFINA M. ALAGAR, Chief, Highways Division | GILBERTO S. REYES, OIC, Director IV | MANUEL M. BONOAN, Undersecretary | SIMEON A. DATUMANONG, Secretary |

PROJECT AND LOCATION :
THE DETAILED DESIGN STUDY ON UPGRADING INTER-URBAN HIGHWAY SYSTEM ALONG THE PAN-PHILIPPINE HIGHWAY (Plaridel, Cabanatuan and San Jose Bypasses)
CABANATUAN BYPASS - CONTRACT PACKAGE I

SCALE : 1:100 FULL SIZE A1

SHEET CONTENTS :
DRAINAGE CROSS-SECTION
ALONG BYPASS ( ULTIMATE STAGE )
STA. 101+453 - STA. 101+925

SHEET NO. : DC-02

## 102+654

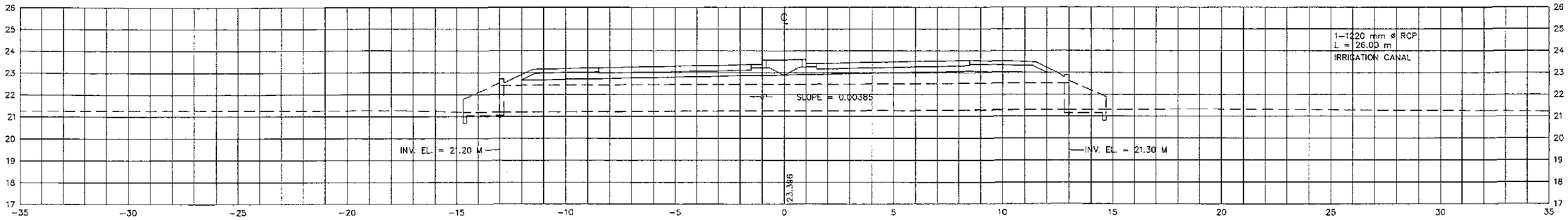


## 102+470

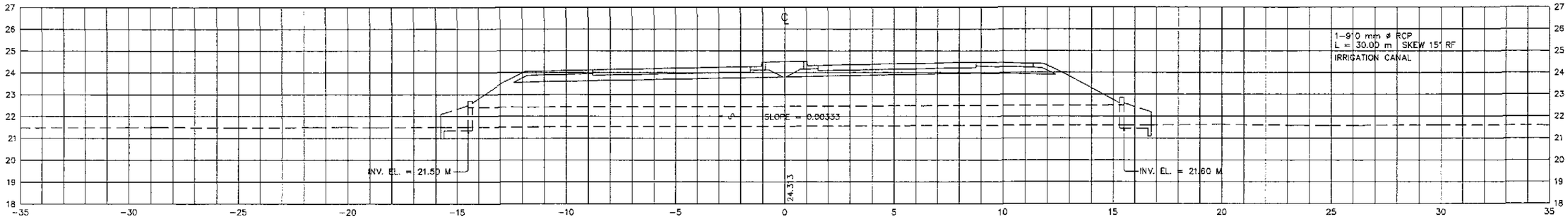


## 102+320

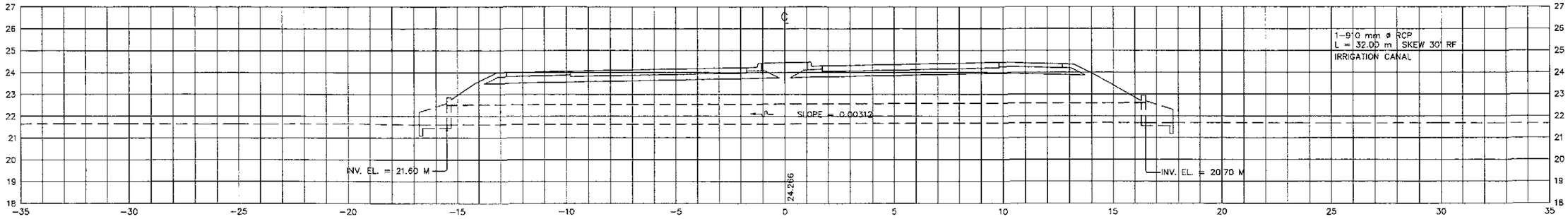


## 102+165

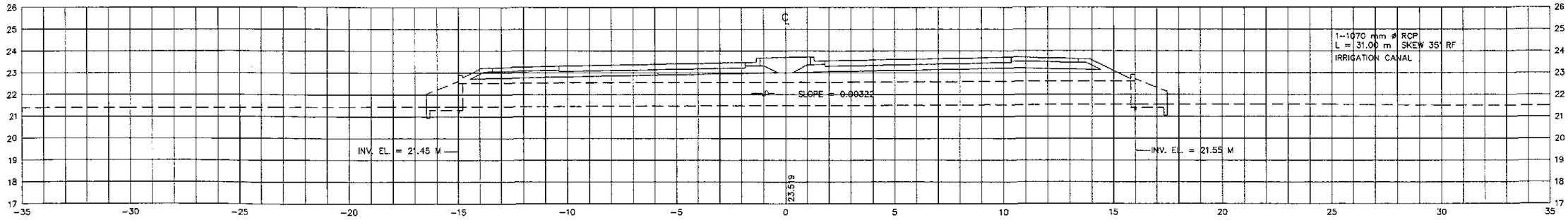


JICA
JAPAN INTERNATIONAL COOPERATION AGENCY

KEI KATAHIRA & ENGINEERS INTERNATIONAL
YEC YACHIYO ENGINEERING CO., LTD.

| | DATE | SIGNATURE | PJHL – PMD | BUREAU OF DESIGN | | OFFICE OF THE SECRETARY | |
|---|---|---|---|---|---|---|---|
| DESIGNED | 10/5/02 | P. SYLVESTER MARIA | | | | | |
| CHECKED | 10/15/02 | A. KATAHIRA | Submitted By: | Reviewed By: | Recommended By: | Recommended By: (See cover sheet for Signature) | Approved By: (See cover sheet for Signature/Approval) |
| SUBMITTED | 10/16/02 | H. ANDOH TEAM LEADER | DANILO C. TRAJANO Project Director | JOSEFINA M. ALAGAR Chief, Highways Division | GILBERTO S. REYES OIC, Director IV | MANUEL M. BONOAN Undersecretary | SIMEON A. DATUMANONG Secretary |

REPUBLIC OF THE PHILIPPINES
DEPARTMENT OF PUBLIC WORKS AND HIGHWAYS

PROJECT AND LOCATION :
**THE DETAILED DESIGN STUDY ON UPGRADING INTER-URBAN HIGHWAY SYSTEM ALONG THE PAN-PHILIPPINE HIGHWAY (Plaridel, Cabanatuan and San Jose Bypasses)**

**CABANATUAN BYPASS - CONTRACT PACKAGE I**

SCALE : 1:100
FULL SIZE A1

SHEET CONTENTS :
**DRAINAGE CROSS-SECTION**
ALONG BYPASS ( ULTIMATE STAGE )
STA. 102+165 - STA. 102+654

SHEET NO. : **DC-03**

## 103+550

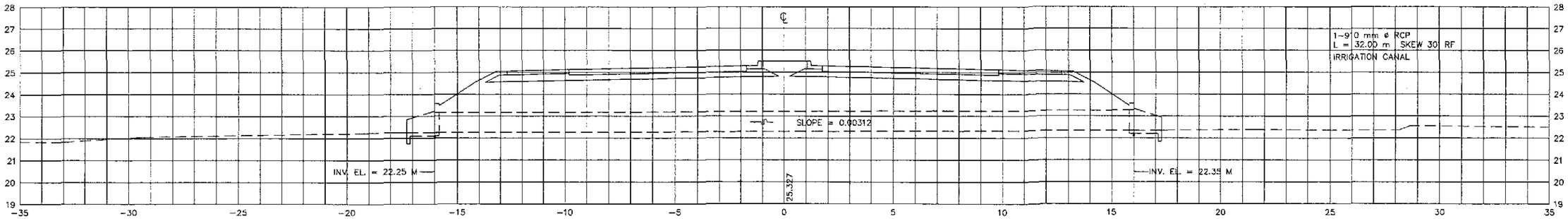


## 103+304

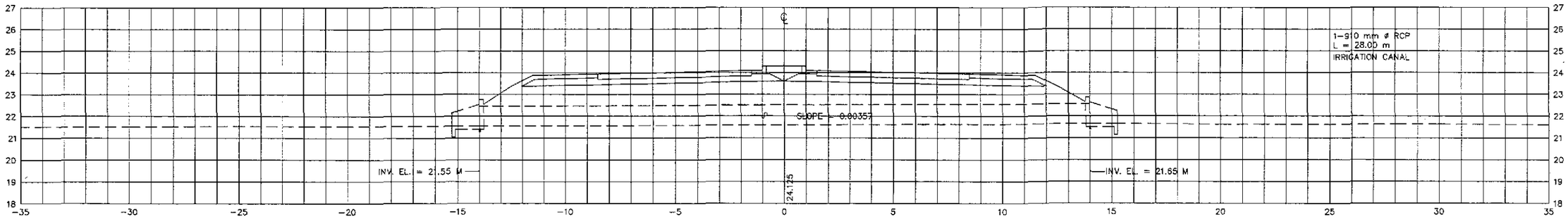


## 103+194

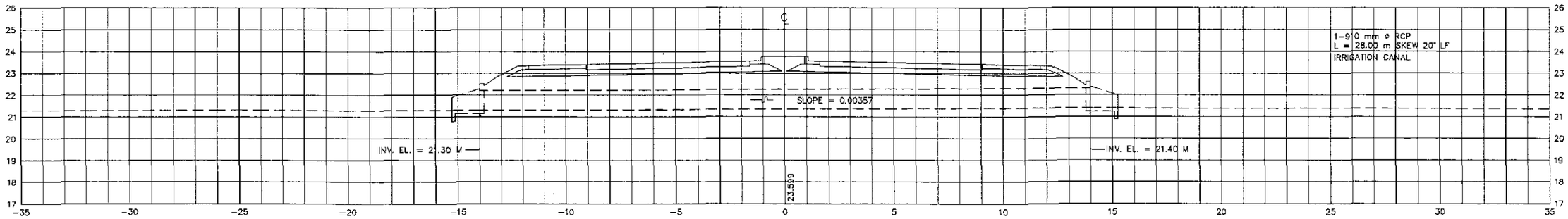


## 102+666

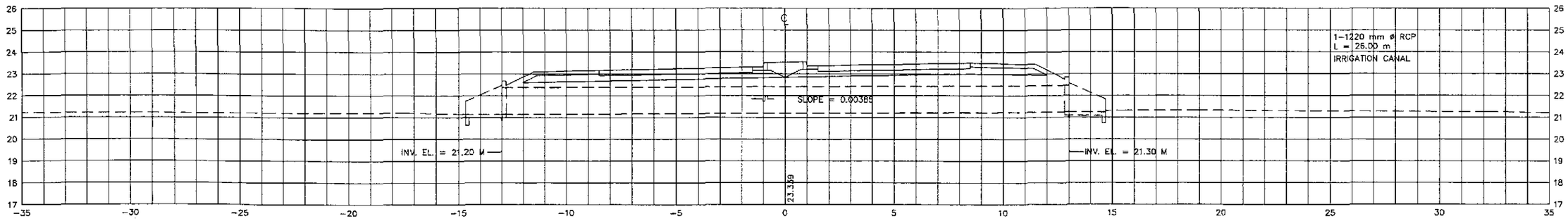


JICA
JAPAN INTERNATIONAL COOPERATION AGENCY

KATAHIRA & ENGINEERS INTERNATIONAL
YACHIYO ENGINEERING CO., LTD.

| | DATE | SIGNATURE * |
|---|---|---|
| DESIGNED | 10/5/02 | |
| CHECKED | 10/5/02 | |
| SUBMITTED | 10/6/02 | |

REPUBLIC OF THE PHILIPPINES
DEPARTMENT OF PUBLIC WORKS AND HIGHWAYS

| PJHL – PMO | BUREAU OF DESIGN | | OFFICE OF THE SECRETARY | |
|---|---|---|---|---|
| Submitted By: | Reviewed By: | Recommended By: | Recommended By: (See cover sheet for Signature) | Approved By: (See cover sheet for Signature/Approval) |
| DANILO C. TRAJANO | JOSEFINA M. ALAGAR | GILBERTO S. REYES | MANUEL M. BONOAN | SIMEON A. DATUMANONG |
| Project Director | Chief, Highways Division | OIC, Director IV | Undersecretary | Secretary |

PROJECT AND LOCATION :
THE DETAILED DESIGN STUDY ON UPGRADING INTER-URBAN HIGHWAY SYSTEM ALONG THE PAN-PHILIPPINE HIGHWAY (Plaridel, Cabanatuan and San Jose Bypasses)
CABANATUAN BYPASS - CONTRACT PACKAGE I

SCALE : 1:100 FULL SIZE A1

SHEET CONTENTS :
DRAINAGE CROSS-SECTION
ALONG BYPASS ( ULTIMATE STAGE )
STA. 102+666 - STA. 103+550

SHEET NO. : DC-04

## 103+894

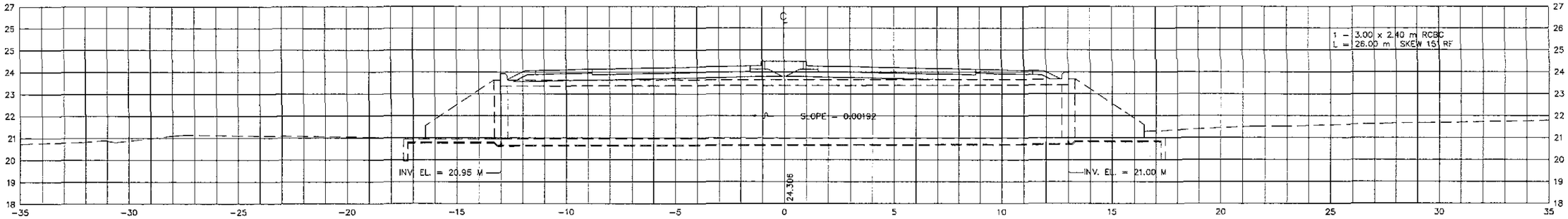


## 103+804

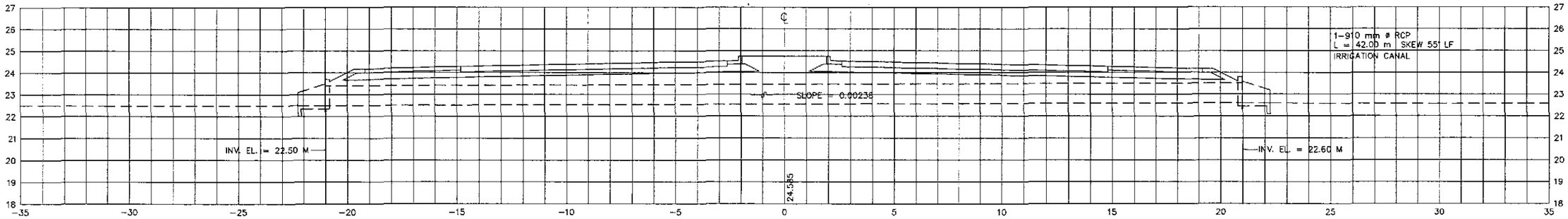


## 103+664

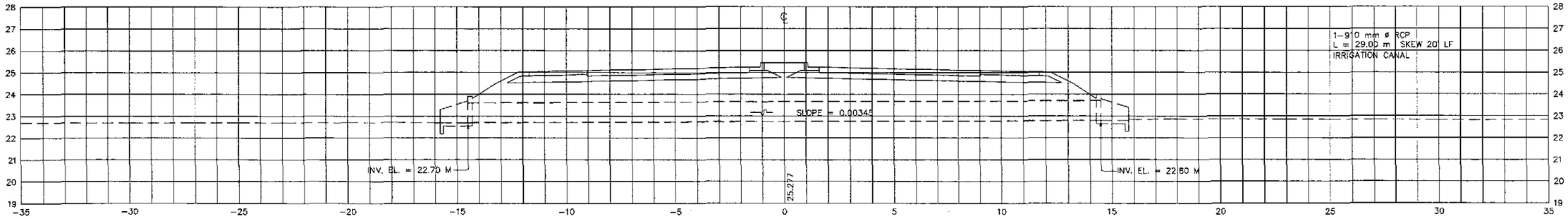


## 103+566

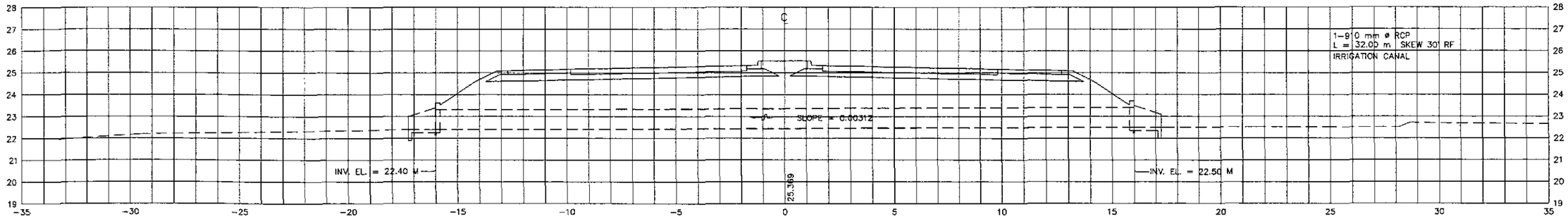


JICA
JAPAN INTERNATIONAL COOPERATION AGENCY
KEI KATAHIRA & ENGINEERS INTERNATIONAL
YEC YACHIYO ENGINEERING CO., LTD.

| | DATE | SIGNATURE |
|---|---|---|
| DESIGNED | 10/5/02 | S. TAJIMA |
| CHECKED | 10/10/02 | A. HAKIM |
| SUBMITTED | 10/16/02 | M. BANDA TEAM LEADER |

REPUBLIC OF THE PHILIPPINES
DEPARTMENT OF PUBLIC WORKS AND HIGHWAYS

| PJHL – PMO | BUREAU OF DESIGN | | OFFICE OF THE SECRETARY | |
|---|---|---|---|---|
| Submitted By: | Reviewed By: | Recommended By: | Recommended By: (See cover sheet for Signature) | Approved By: (See cover sheet for Signature/Approval) |
| DANILO C. TRAJANO | JOSEFINA M. ALAGAR | GILBERTO S. REYES | MANUEL M. BONOAN | SIMEON A. DATUMANONG |
| Project Director | Chief, Highways Division | OIC, Director IV | Undersecretary | Secretary |

PROJECT AND LOCATION :
THE DETAILED DESIGN STUDY ON UPGRADING INTER-URBAN HIGHWAY SYSTEM ALONG THE PAN-PHILIPPINE HIGHWAY (Plaridel, Cabanatuan and San Jose Bypasses)
CABANATUAN BYPASS - CONTRACT PACKAGE I

SCALE : 1:100 FULL SIZE A1

SHEET CONTENTS :
DRAINAGE CROSS-SECTION
ALONG BYPASS ( ULTIMATE STAGE )
STA. 103+566 - STA. 103+894

SHEET NO. : DC-05

## 104+294

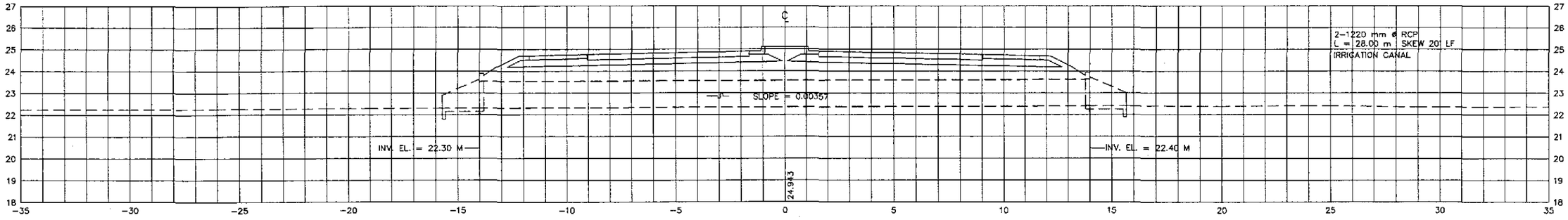


## 104+194

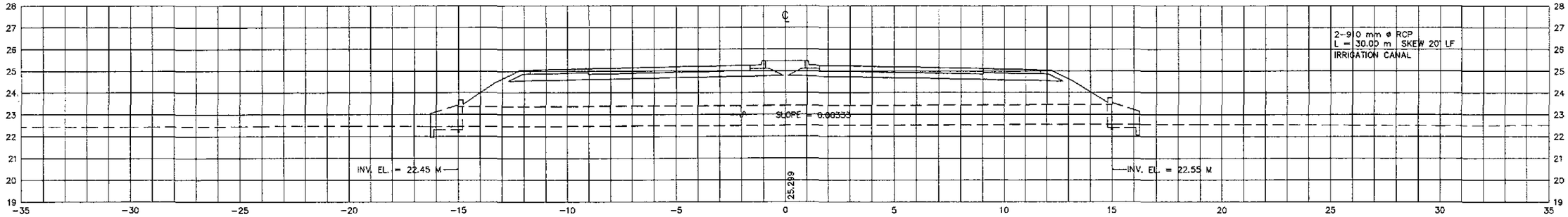


## 104+055

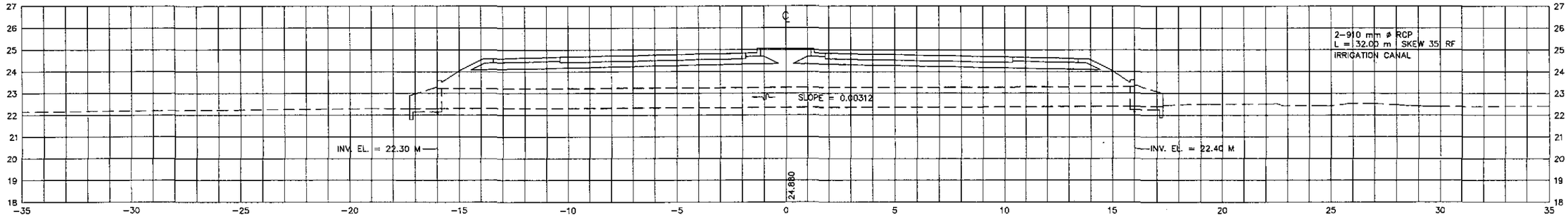


## 104+039

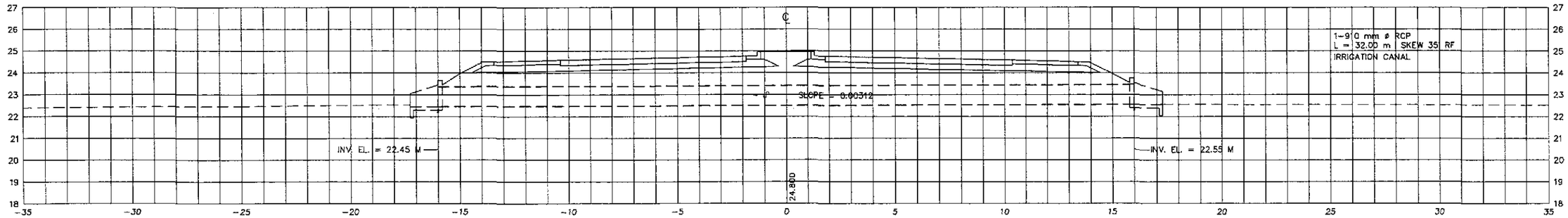


JICA
JAPAN INTERNATIONAL COOPERATION AGENCY

KEI KATAHIRA & ENGINEERS INTERNATIONAL
YEC YACHIYO ENGINEERING CO., LTD.

| | DATE | SIGNATURE |
|---|---|---|
| DESIGNED | 10/15/02 | A.T. STA. MARIA |
| CHECKED | 10/15/02 | H. HAKIM |
| SUBMITTED | 10/16/02 | M. ANGELES TEAM LEADER |

REPUBLIC OF THE PHILIPPINES
DEPARTMENT OF PUBLIC WORKS AND HIGHWAYS

| PJHL – PMO | BUREAU OF DESIGN | | OFFICE OF THE SECRETARY | |
|---|---|---|---|---|
| Submitted By: | Reviewed By: | Recommended By: | Recommended By: (See cover sheet for Signature) | Approved By: (See cover sheet for Signature/Approval) |
| DANILO C. TRAJANO | JOSEFINA M. ALACAR | GILBERTO S. REYES | MANUEL M. BONOAN | SIMEON A. DATUMANONG |
| Project Director | Chief, Highways Division | DIC, Director IV | Undersecretary | Secretary |

PROJECT AND LOCATION :
THE DETAILED DESIGN STUDY ON UPGRADING INTER-URBAN HIGHWAY SYSTEM ALONG THE PAN-PHILIPPINE HIGHWAY (Plaridel, Cabanatuan and San Jose Bypasses)
CABANATUAN BYPASS - CONTRACT PACKAGE I

SCALE : 1:100 FULL SIZE A1

SHEET CONTENTS :
DRAINAGE CROSS-SECTION
ALONG BYPASS ( ULTIMATE STAGE )
STA. 104+039 - STA. 104+294

SHEET NO. : DC-06

## 104+812

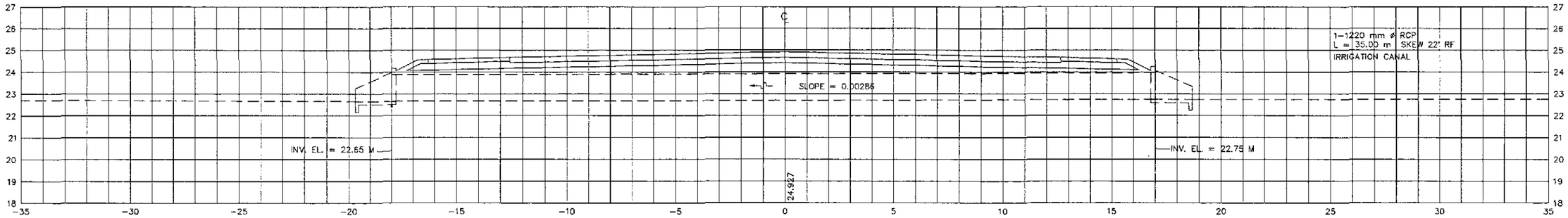


## 104+794

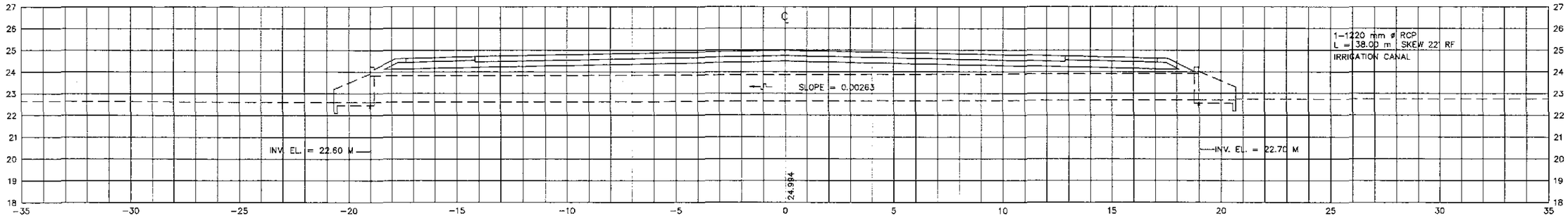


## 104+580

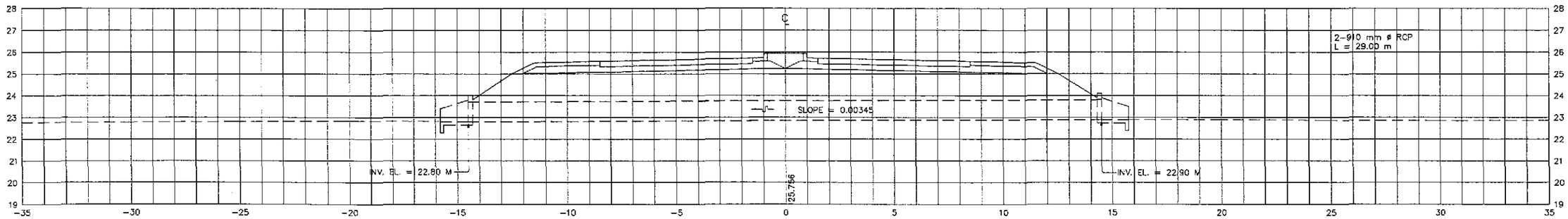


## 104+334

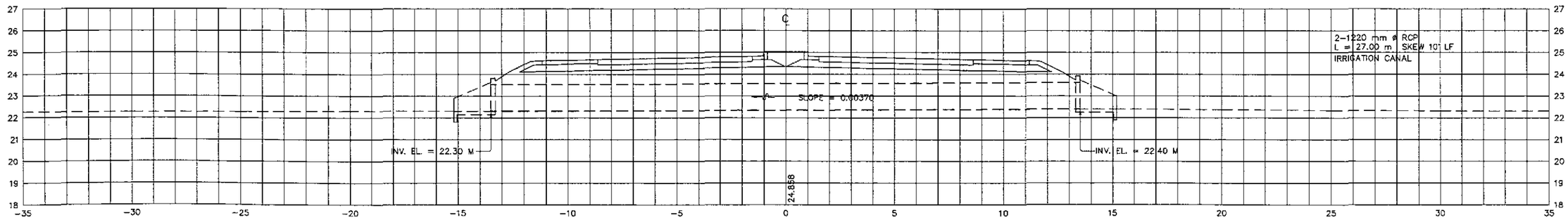


JICA
JAPAN INTERNATIONAL COOPERATION AGENCY

KEI KATAHIRA & ENGINEERS INTERNATIONAL
YEC YACHIYO ENGINEERING CO., LTD.

| | DATE | SIGNATURE |
|---|---|---|
| DESIGNED | 10/15/02 | |
| CHECKED | 10/18/02 | |
| SUBMITTED | 10/18/02 | M. MIYAUCHI TEAM LEADER |

REPUBLIC OF THE PHILIPPINES
DEPARTMENT OF PUBLIC WORKS AND HIGHWAYS

| PJHL – PMO | BUREAU OF DESIGN | | OFFICE OF THE SECRETARY | |
|---|---|---|---|---|
| Submitted By: | Reviewed By: | Recommended By: | Recommended By: (See cover sheet for Signature) | Approved By: (See cover sheet for Signature/Approval) |
| DANILO C. TRAJANO | JOSEFINA M. ALAGAR | GILBERTO S. REYES | MANUEL M. BONGAN | SIMEON A. DATUMANONG |
| Project Director | Chief, Highways Division | OIC, Director IV | Undersecretary | Secretary |

PROJECT AND LOCATION :
THE DETAILED DESIGN STUDY ON UPGRADING INTER-URBAN HIGHWAY SYSTEM ALONG THE PAN-PHILIPPINE HIGHWAY (Plaridel, Cabanatuan and San Jose Bypasses)
CABANATUAN BYPASS - CONTRACT PACKAGE I

SCALE : 1:100 FULL SIZE A1

SHEET CONTENTS :
DRAINAGE CROSS-SECTION
ALONG BYPASS ( ULTIMATE STAGE )
STA. 104+334 - STA. 104+812

SHEET NO. : DC-07

## 105+954

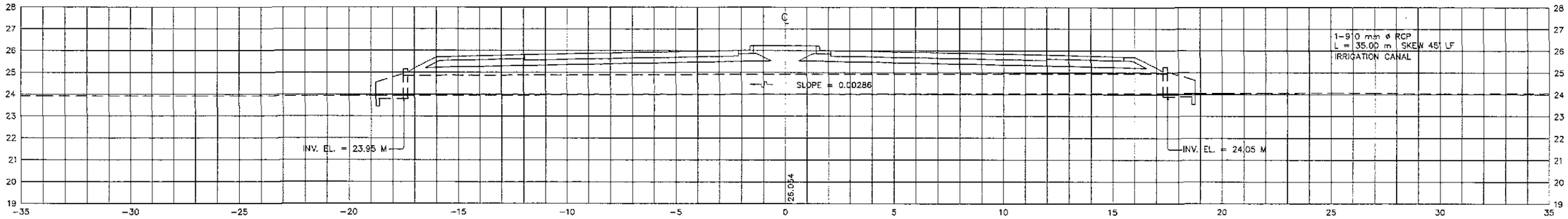


## 105+724

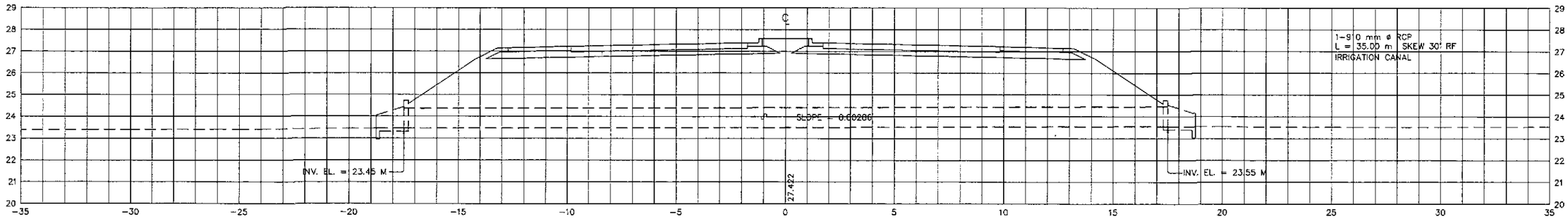


## 105+325

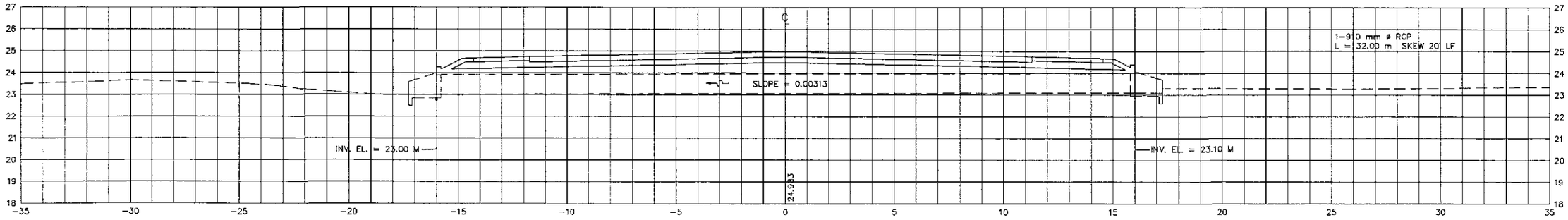


## 105+305

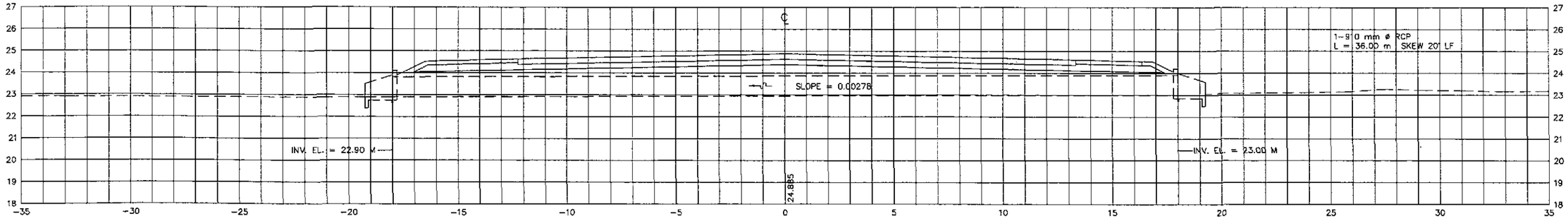


JICA
JAPAN INTERNATIONAL COOPERATION AGENCY

KEI KATAHIRA & ENGINEERS INTERNATIONAL
YEC YACHIYO ENGINEERING CO., LTD.

| | DATE | SIGNATURE |
|---|---|---|
| DESIGNED | 10/5/02 | F. STA. MARIA |
| CHECKED | 10/15/02 | A. PARTO |
| SUBMITTED | 10/16/02 | M. MOLINA TEAM LEADER |

REPUBLIC OF THE PHILIPPINES
DEPARTMENT OF PUBLIC WORKS AND HIGHWAYS

| PJHL – PMO | BUREAU OF DESIGN | | OFFICE OF THE SECRETARY | |
|---|---|---|---|---|
| Submitted By: | Reviewed By: | Recommended By: | Recommended By: (See cover sheet for Signature) | Approved By: (See cover sheet for Signature/Approval) |
| DANILO C. TRAJANO | JOSEFINA M. ALAGAR | GILBERTO S. REYES | MANUEL M. BONOAN | SIMEON A. DATUMANONG |
| Project Director | Chief, Highways Division | OIC, Director IV | Undersecretary | Secretary |

PROJECT AND LOCATION :
THE DETAILED DESIGN STUDY ON UPGRADING INTER-URBAN HIGHWAY SYSTEM ALONG THE PAN-PHILIPPINE HIGHWAY (Plaridel, Cabanatuan and San Jose Bypasses)
CABANATUAN BYPASS - CONTRACT PACKAGE I

SCALE : 1:100 FULL SIZE A1

SHEET CONTENTS :
DRAINAGE CROSS-SECTION
ALONG BYPASS ( ULTIMATE STAGE )
STA. 105+305 - STA. 105+954

SHEET NO. : DC-08

## 106+364

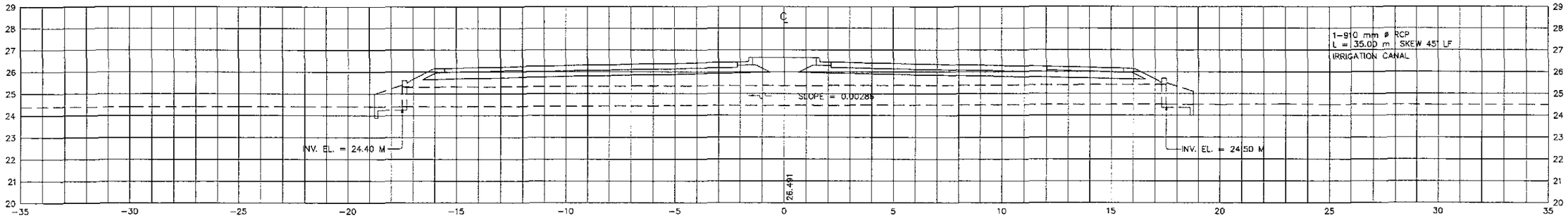


## 106+220

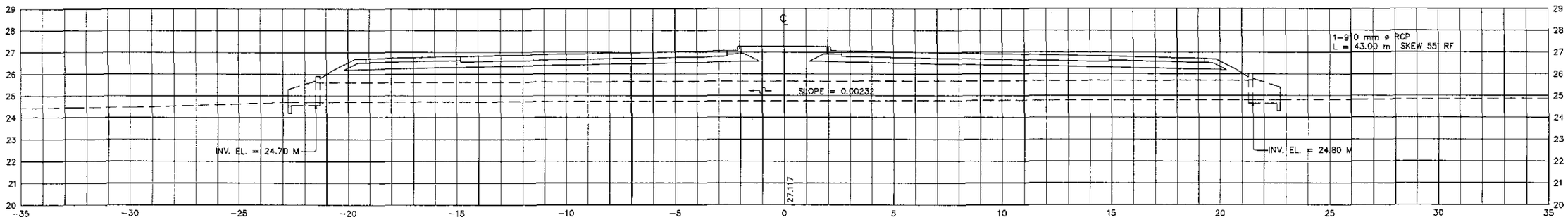


## 106+206

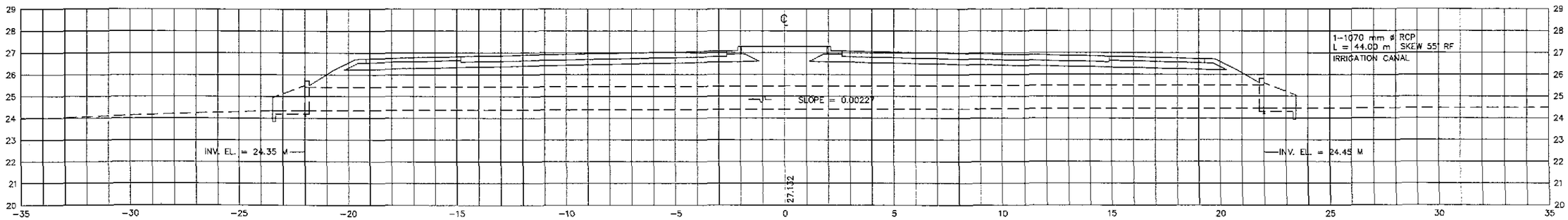


## 106+176

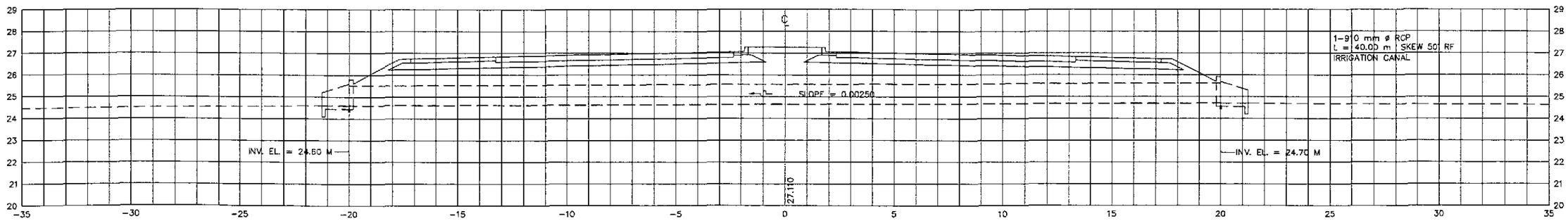


JICA
JAPAN INTERNATIONAL COOPERATION AGENCY
KEI KATAHIRA & ENGINEERS INTERNATIONAL
YEC YACHIYO ENGINEERING CO., LTD.

| | DATE | SIGNATURE |
|---|---|---|
| DESIGNED | 10/5/02 | |
| CHECKED | 10/5/02 | |
| SUBMITTED | 10/16/02 | |

REPUBLIC OF THE PHILIPPINES
DEPARTMENT OF PUBLIC WORKS AND HIGHWAYS

| PJHL – PMO | BUREAU OF DESIGN | | OFFICE OF THE SECRETARY | |
|---|---|---|---|---|
| Submitted By: | Reviewed By: | Recommended By: | Recommended By: (See cover sheet for Signature) | Approved By: (See cover sheet for Signature/Approval) |
| DANILO C. TRAJANO | JOSEFINA M. ALAGAR | GILBERTO S. REYES | MANUEL M. BONDAN | SIMEON A. DATUMANONG |
| Project Director | Chief, Highways Division | OIC, Director IV | Undersecretary | Secretary |

PROJECT AND LOCATION :
THE DETAILED DESIGN STUDY ON UPGRADING INTER-URBAN HIGHWAY SYSTEM ALONG THE PAN-PHILIPPINE HIGHWAY (Plaridel, Cabanatuan and San Jose Bypasses)
CABANATUAN BYPASS - CONTRACT PACKAGE I

SCALE : 1:100 FULL SIZE A1

SHEET CONTENTS :
DRAINAGE CROSS-SECTION
ALONG BYPASS ( ULTIMATE STAGE )
STA. 106+176 - STA. 106+364

SHEET NO. : DC-09

## 106+800

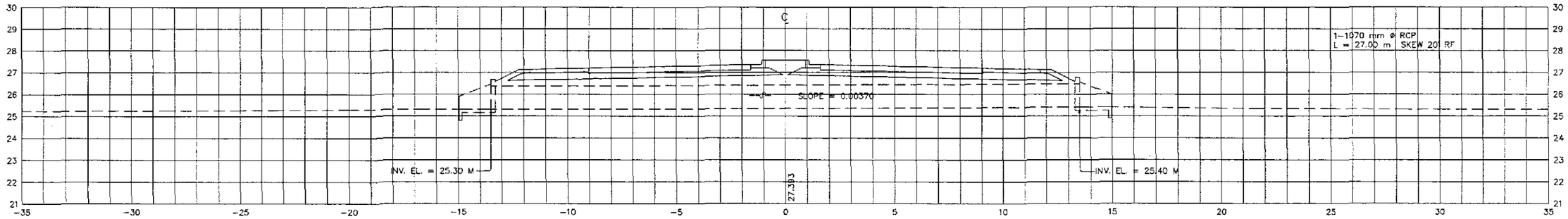


## 106+610

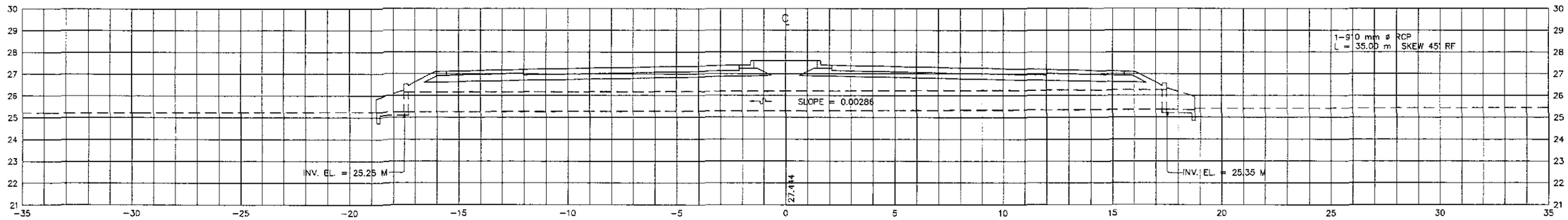


## 106+597

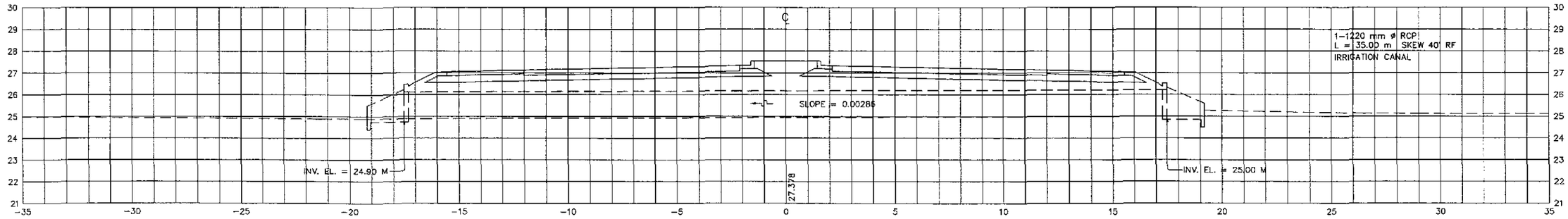


## 106+509

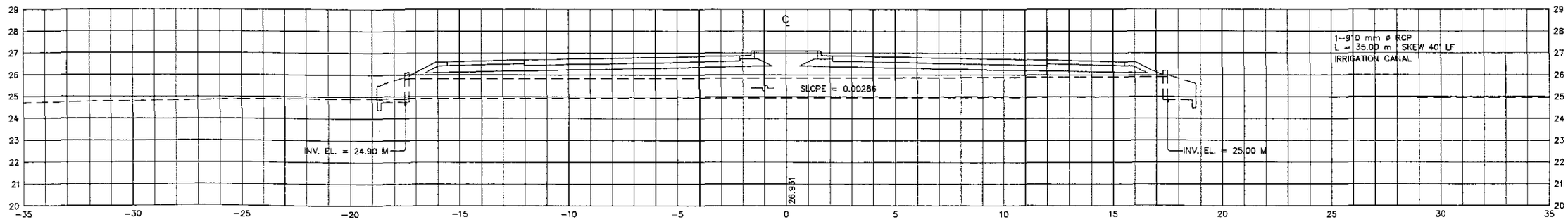


| | | | |
|---|---|---|---|
| JICA JAPAN INTERNATIONAL COOPERATION AGENCY | | | |
| KEI KATAHIRA & ENGINEERS INTERNATIONAL / YEC YACHIYO ENGINEERING CO., LTD. | | | |
| | DATE | SIGNATURE | |
| DESIGNED | 10/5/02 | F. STA. MARIA | |
| CHECKED | 10/15/02 | M. HAKIM | |
| SUBMITTED | 10/16/02 | M. KIUCHI TEAM LEADER | |

REPUBLIC OF THE PHILIPPINES
DEPARTMENT OF PUBLIC WORKS AND HIGHWAYS

| PUHL – PMO | BUREAU OF DESIGN | | OFFICE OF THE SECRETARY | |
|---|---|---|---|---|
| Submitted By: | Reviewed By: | Recommended By: | Recommended By: (See cover sheet for Signature) | Approved By: (See cover sheet for Signature/Approval) |
| DANILO C. TRAJANO | JOSEFINA M. ALAGAR | GILBERTO S. REYES | MANUEL M. BONOAN | SIMEON A. DATUMANONG |
| Project Director | Chief, Highways Division | O/C, Director IV | Undersecretary | Secretary |

| PROJECT AND LOCATION : | SCALE : | SHEET CONTENTS : | SHEET NO. : |
|---|---|---|---|
| THE DETAILED DESIGN STUDY ON UPGRADING INTER-URBAN HIGHWAY SYSTEM ALONG THE PAN-PHILIPPINE HIGHWAY (Plaridel, Cabanatuan and San Jose Bypasses) | 1:100 | DRAINAGE CROSS-SECTION ALONG BYPASS ( ULTIMATE STAGE ) STA. 106+509 - STA. 106+800 | DC-10 |
| CABANATUAN BYPASS - CONTRACT PACKAGE I | FULL SIZE A1 | | |

## 107+494

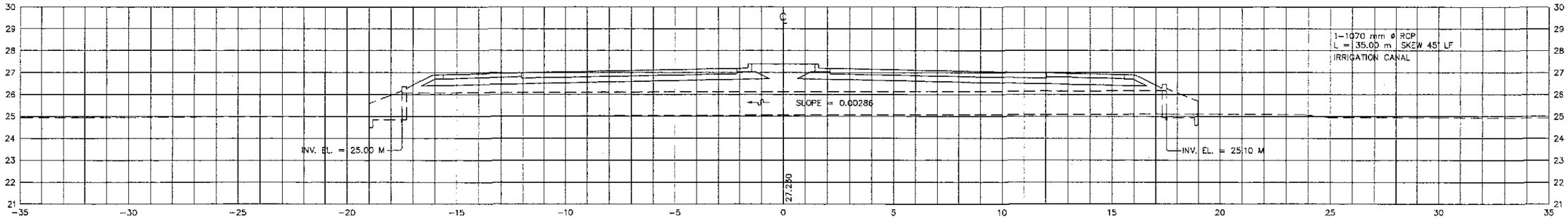


## 107+280

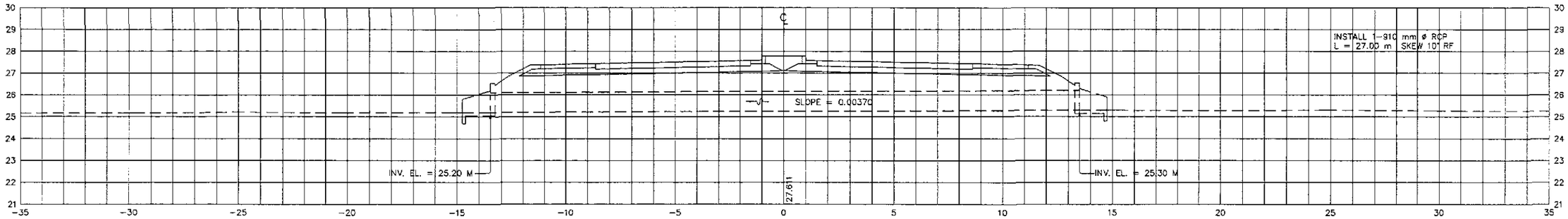


## 107+154

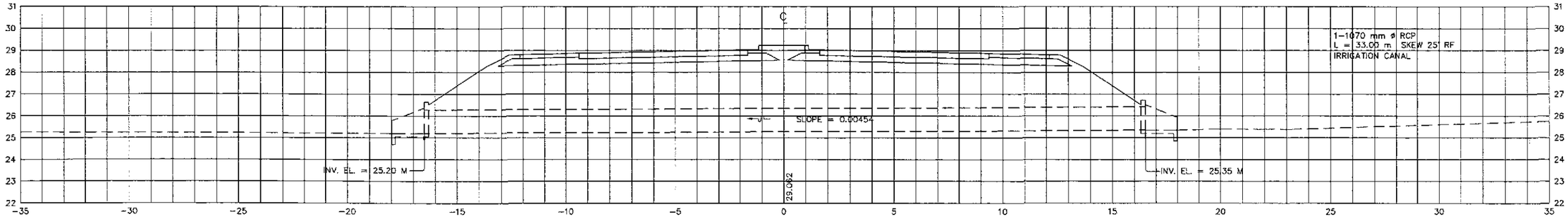


## 107+000

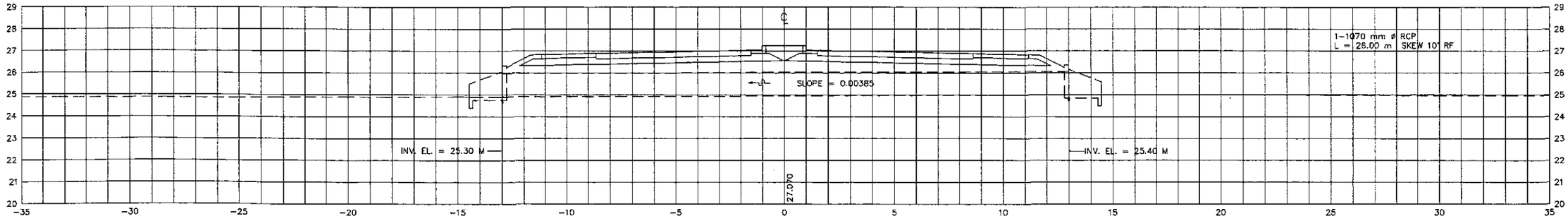


JICA
JAPAN INTERNATIONAL COOPERATION AGENCY

KEI KATAHIRA & ENGINEERS INTERNATIONAL
YEC YACHIYO ENGINEERING CO., LTD.

| | DATE | SIGNATURE |
|---|---|---|
| DESIGNED | 10/5/02 | |
| CHECKED | 10/15/02 | |
| SUBMITTED | 10/16/02 | |

REPUBLIC OF THE PHILIPPINES
DEPARTMENT OF PUBLIC WORKS AND HIGHWAYS

| PJHL – PMO | BUREAU OF DESIGN | | OFFICE OF THE SECRETARY | |
|---|---|---|---|---|
| Submitted By: | Reviewed By: | Recommended By: | Recommended By: (See cover sheet for Signature) | Approved By: (See cover sheet for Signature/Approval) |
| DANILO C. TRAJANO | JOSEFINA M. ALAGAR | GILBERTO S. REYES | MANUEL M. BONDAN | SIMEON A. DATUMANONG |
| Project Director | Chief, Highways Division | OIC, Director IV | Undersecretary | Secretary |

PROJECT AND LOCATION :
THE DETAILED DESIGN STUDY ON UPGRADING INTER-URBAN HIGHWAY SYSTEM ALONG THE PAN-PHILIPPINE HIGHWAY (Plaridel, Cabanatuan and San Jose Bypasses)
CABANATUAN BYPASS - CONTRACT PACKAGE I

SCALE : 1:100 FULL SIZE A1

SHEET CONTENTS :
DRAINAGE CROSS-SECTION
ALONG BYPASS ( ULTIMATE STAGE )
STA. 107+000 - STA. 107+494

SHEET NO. : DC-11

## 108+040

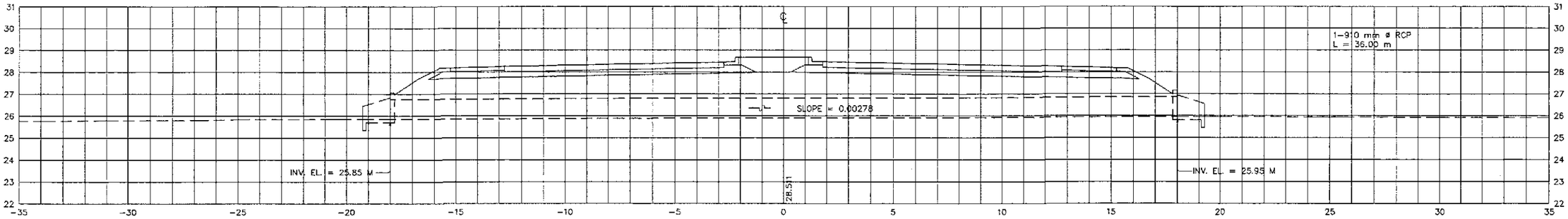


## 107+804

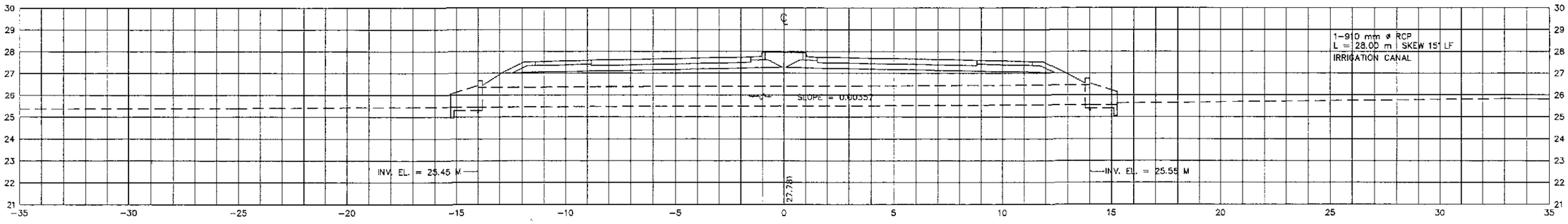


## 107+704

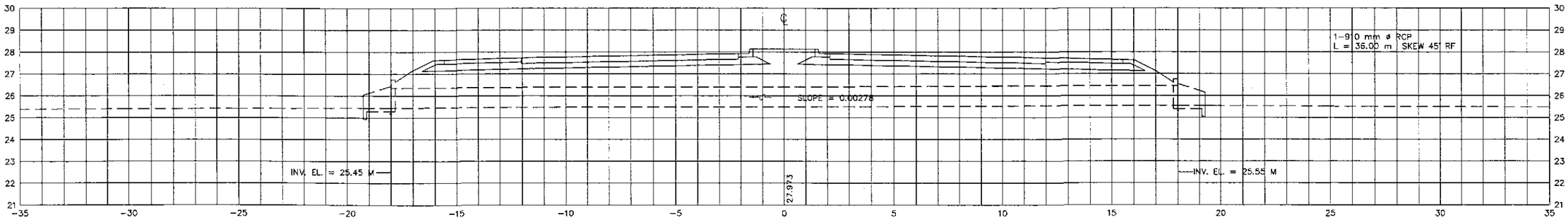


## 107+560

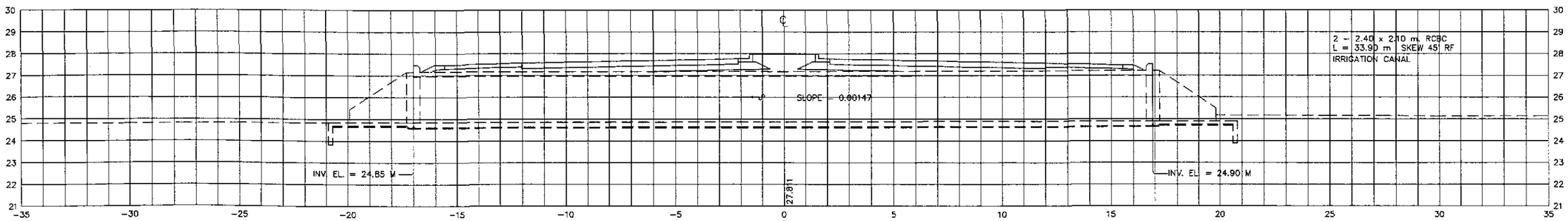


JICA
JAPAN INTERNATIONAL COOPERATION AGENCY
KEI KATAHIRA & ENGINEERS INTERNATIONAL
YEC YACHIYO ENGINEERING CO., LTD.

| | DATE | SIGNATURE |
|---|---|---|
| DESIGNED | 10/5/02 | N. SAKAMOTO |
| CHECKED | 10/15/02 | H. MATSUI |
| SUBMITTED | 10/16/02 | M. KIKUCHI TEAM LEADER |

REPUBLIC OF THE PHILIPPINES
DEPARTMENT OF PUBLIC WORKS AND HIGHWAYS

| PJHL – PMO | BUREAU OF DESIGN | | OFFICE OF THE SECRETARY | |
|---|---|---|---|---|
| Submitted By: | Reviewed By: | Recommended By: | Recommended By: (See cover sheet for Signature) | Approved By: (See cover sheet for Signature/Approval) |
| DANILO C. TRAJANO | JOSEFINA M. ALAGAR | GILBERTO S. REYES | MANUEL M. BONOAN | SIMEON A. DATUMANONG |
| Project Director | Chief, Highways Division | OIC, Director IV | Undersecretary | Secretary |

PROJECT AND LOCATION :
THE DETAILED DESIGN STUDY ON UPGRADING INTER-URBAN HIGHWAY SYSTEM ALONG THE PAN-PHILIPPINE HIGHWAY (Plaridel, Cabanatuan and San Jose Bypasses)
CABANATUAN BYPASS - CONTRACT PACKAGE I

SCALE : 1:100 FULL SIZE A1

SHEET CONTENTS :
DRAINAGE CROSS-SECTION
ALONG BYPASS ( ULTIMATE STAGE )
STA. 107+560 - STA. 108+040

SHEET NO. : DC-12

## 108+500

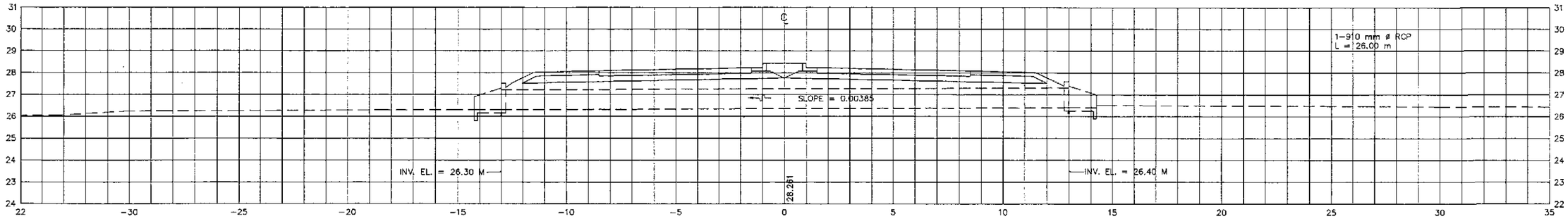


## 108+300

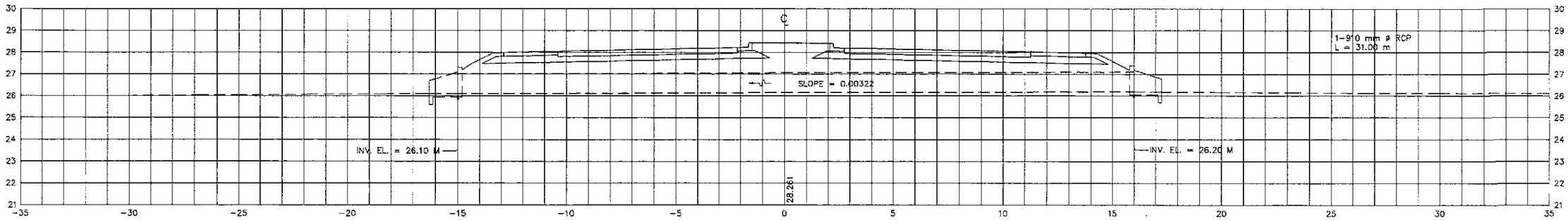


## 108+165

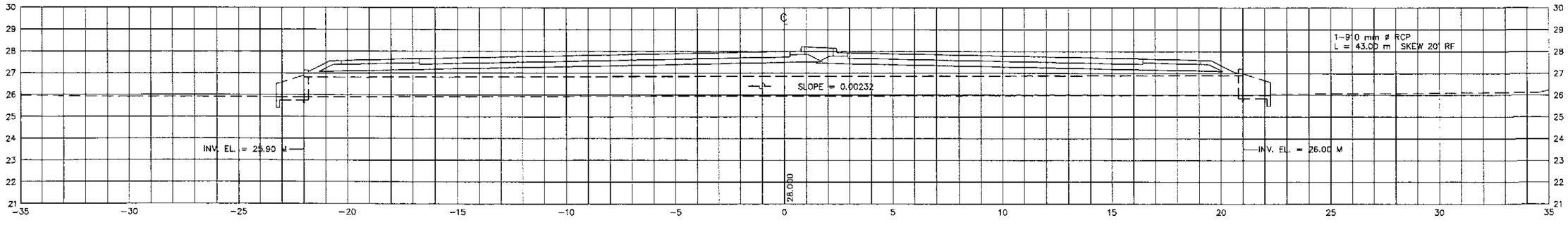


## 108+134

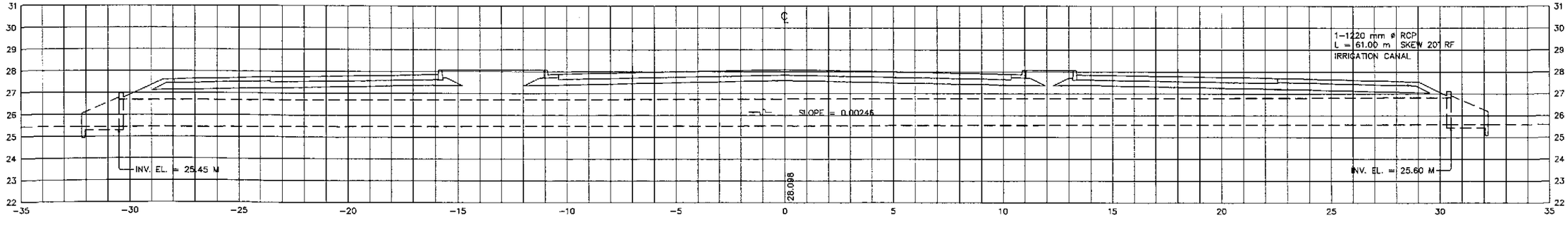


JICA
JAPAN INTERNATIONAL COOPERATION AGENCY

KEI KATAHIRA & ENGINEERS INTERNATIONAL
YEC YACHIYO ENGINEERING CO., LTD.

| | DATE | SIGNATURE |
|---|---|---|
| DESIGNED | 10/8/02 | |
| CHECKED | 10/8/02 | |
| SUBMITTED | 10/16/02 | TEAM LEADER |

REPUBLIC OF THE PHILIPPINES
DEPARTMENT OF PUBLIC WORKS AND HIGHWAYS

| PJHL – PMO | BUREAU OF DESIGN | | OFFICE OF THE SECRETARY | |
|---|---|---|---|---|
| Submitted By: | Reviewed By: | Recommended By: | Recommended By: (See cover sheet for Signature) | Approved By: (See cover sheet for Signature/Approval) |
| DANILO C. TRAJANO | JOSEFINA M. ALAGAR | GILBERTO S. REYES | MANUEL M. BONDOAN | SIMEON A. DATUMANONG |
| Project Director | Chief, Highways Division | OIC, Director IV | Undersecretary | Secretary |

PROJECT AND LOCATION :
THE DETAILED DESIGN STUDY ON UPGRADING INTER-URBAN HIGHWAY SYSTEM ALONG THE PAN-PHILIPPINE HIGHWAY (Plaridel, Cabanatuan and San Jose Bypasses)
CABANATUAN BYPASS - CONTRACT PACKAGE I

SCALE : 1:100 FULL SIZE A1

SHEET CONTENTS :
DRAINAGE CROSS-SECTION
ALONG BYPASS ( ULTIMATE STAGE )
STA. 108+134 - STA. 108+500

SHEET NO. : DC-13

## 108+940

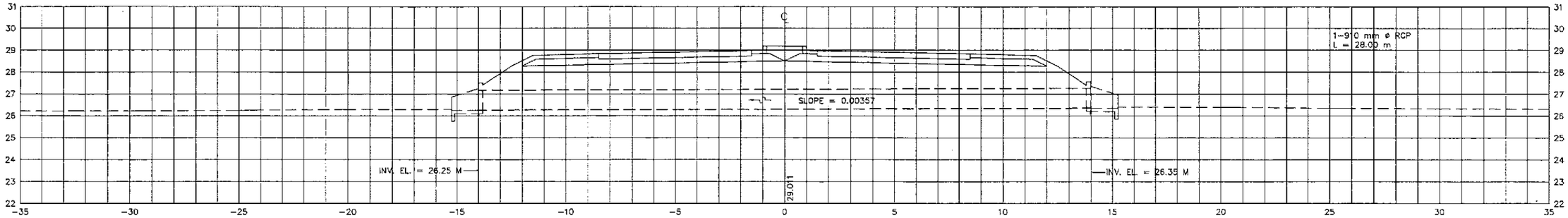


## 108+742

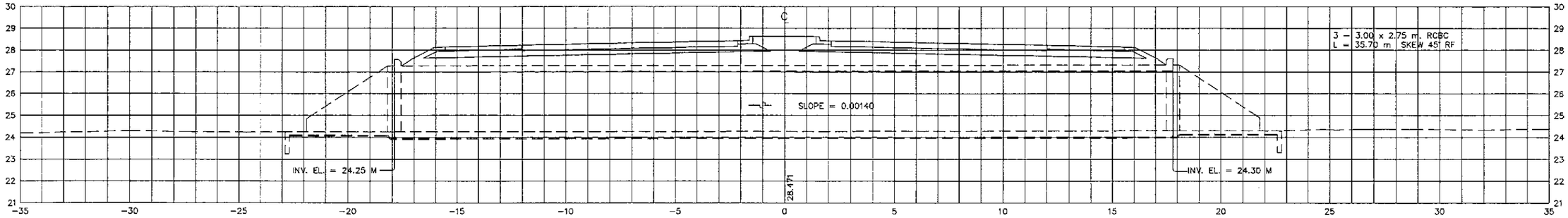


## 108+594

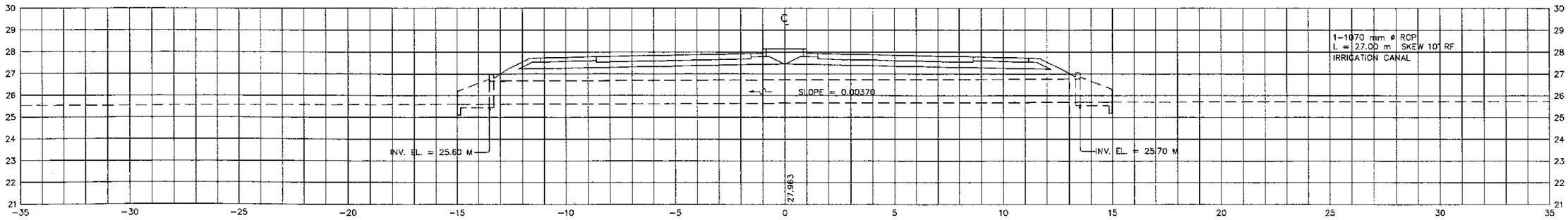


## 108+582

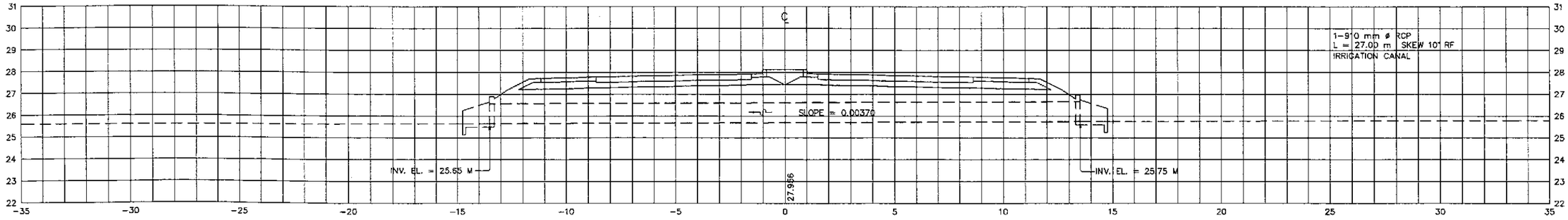


JICA
JAPAN INTERNATIONAL COOPERATION AGENCY

KEI KATAHIRA & ENGINEERS INTERNATIONAL
YEC YACHIYO ENGINEERING CO., LTD.

| | DATE | SIGNATURE |
|---|---|---|
| DESIGNED | 10/6/02 | |
| CHECKED | 10/10/02 | |
| SUBMITTED | 10/16/02 | TEAM LEADER |

REPUBLIC OF THE PHILIPPINES
DEPARTMENT OF PUBLIC WORKS AND HIGHWAYS

| PJHL - PMO | BUREAU OF DESIGN | | OFFICE OF THE SECRETARY | |
|---|---|---|---|---|
| Submitted By: | Reviewed By: | Recommended By: | Recommended By: (See cover sheet for Signature) | Approved By: (See cover sheet for Signature/Approval) |
| DANILO C. TRAJANO | JOSEFINA M. ALAGAR | GILBERTO S. REYES | MANUEL M. BONOAN | SIMEON A. DATUMANONG |
| Project Director | Chief, Highways Division | OIC, Director IV | Undersecretary | Secretary |

PROJECT AND LOCATION :
THE DETAILED DESIGN STUDY ON UPGRADING INTER-URBAN HIGHWAY SYSTEM ALONG THE PAN-PHILIPPINE HIGHWAY (Plaridel, Cabanatuan and San Jose Bypasses)
CABANATUAN BYPASS - CONTRACT PACKAGE I

SCALE : 1:100 FULL SIZE A1

SHEET CONTENTS :
DRAINAGE CROSS-SECTION
ALONG BYPASS ( ULTIMATE STAGE )
STA. 108+582 - STA. 108+940

SHEET NO. : DC-14

## 109+534

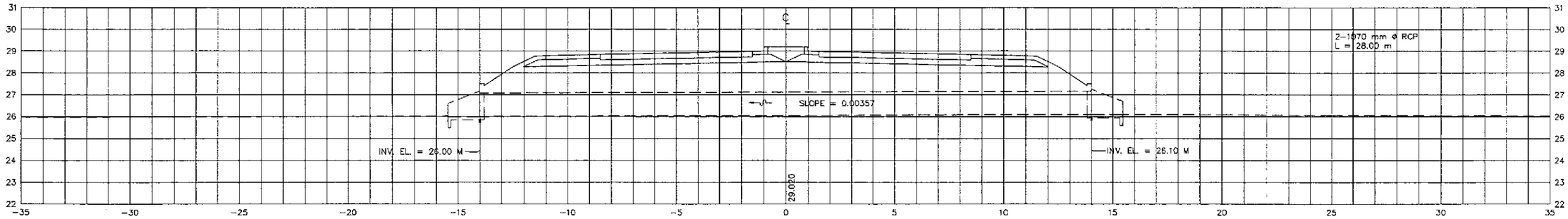


## 109+300

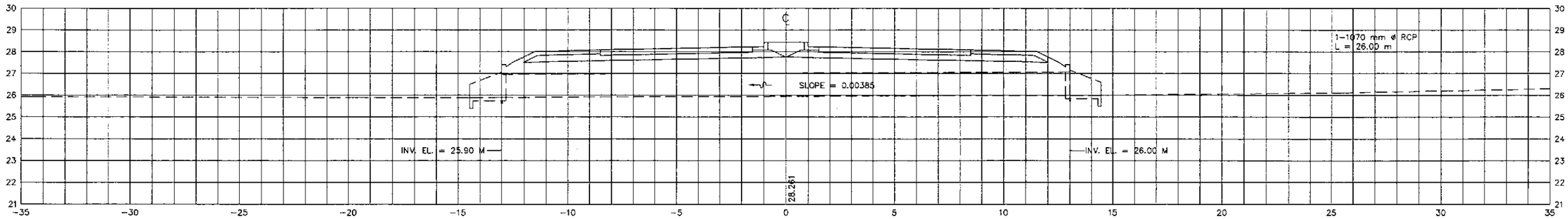


## 109+285

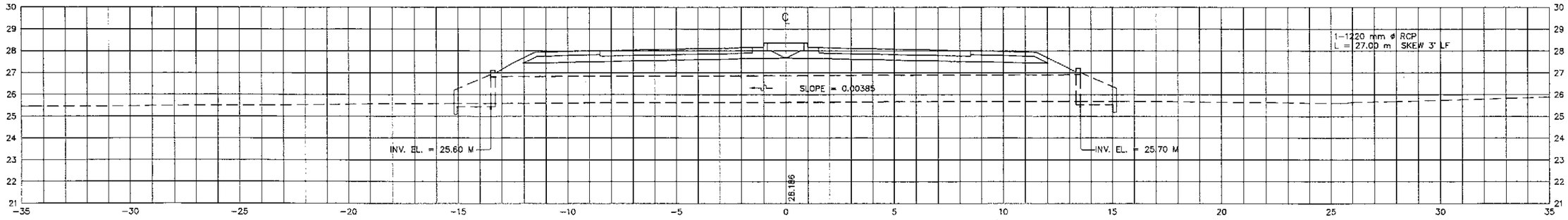


## 109+120

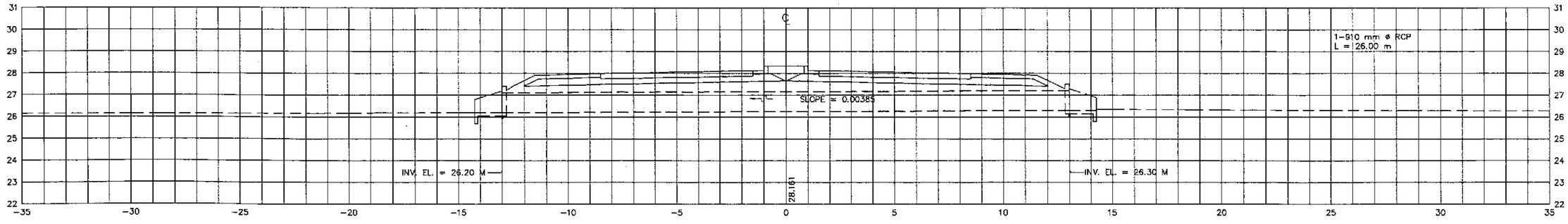


| | | | | | | |
|---|---|---|---|---|---|---|
| JICA JAPAN INTERNATIONAL COOPERATION AGENCY | | DATE | SIGNATURE | REPUBLIC OF THE PHILIPPINES DEPARTMENT OF PUBLIC WORKS AND HIGHWAYS | | |
| KATAHIRA & ENGINEERS INTERNATIONAL / YACHIYO ENGINEERING CO., LTD. | DESIGNED | 10/15/02 | | PUHL – PMO | BUREAU OF DESIGN | OFFICE OF THE SECRETARY |
| | CHECKED | 10/15/02 | | Submitted By: | Reviewed By: | Recommended By: (See cover sheet for Signature) / Recommended By: (See cover sheet for Signature/Approval) / Approved By: |
| | SUBMITTED | 10/16/02 | M. KIKUCHI TEAM LEADER | DANILO C. TRAJANO Project Director | JOSEFINA M. ALAGAR Chief, Highways Division | GILBERTO S. REYES OIC, Director IV / MANUEL M. BONOAN Undersecretary / SIMEON A. DATUMANONG Secretary |

| PROJECT AND LOCATION : | SCALE : | SHEET CONTENTS : | SHEET NO. : |
|---|---|---|---|
| THE DETAILED DESIGN STUDY ON UPGRADING INTER-URBAN HIGHWAY SYSTEM ALONG THE PAN-PHILIPPINE HIGHWAY (Plaridel, Cabanatuan and San Jose Bypasses) | 1:100 | DRAINAGE CROSS-SECTION ALONG BYPASS ( ULTIMATE STAGE ) STA. 109+120 - STA. 109+534 | DC-15 |
| CABANATUAN BYPASS - CONTRACT PACKAGE I | FULL SIZE A1 | | |

109+912

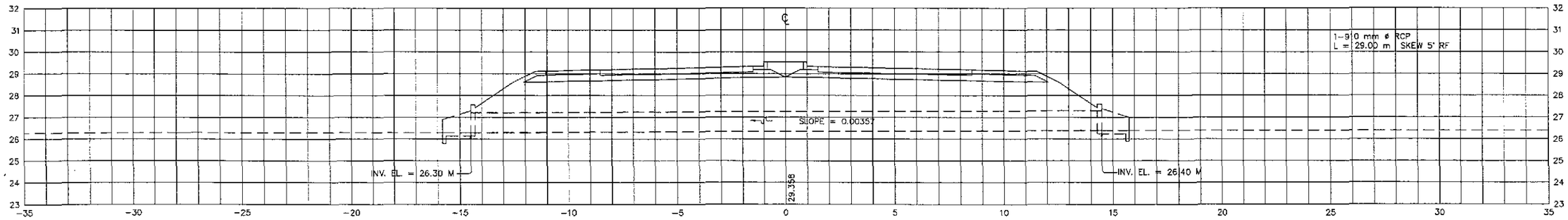


109+574

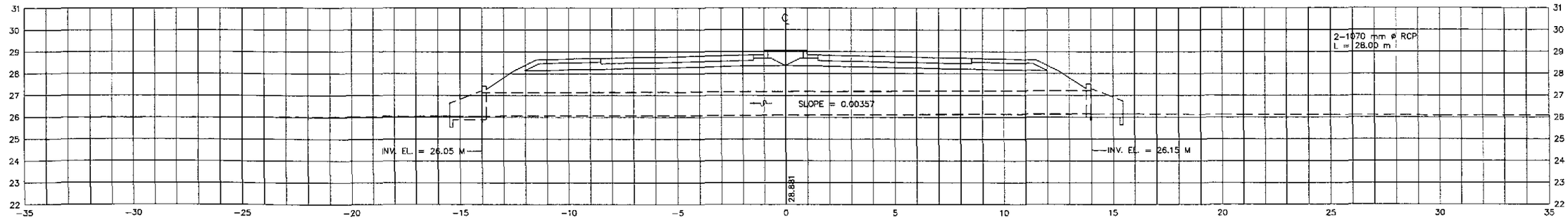


JICA
JAPAN INTERNATIONAL COOPERATION AGENCY

KATAHIRA & ENGINEERS INTERNATIONAL
YACHIYO ENGINEERING CO., LTD.

| | DATE | SIGNATURE |
|---|---|---|
| DESIGNED | 10/5/02 | M. EVO MAKITA |
| CHECKED | 10/11/02 | M. MAKITA |
| SUBMITTED | 10/12/02 | M. FUKUCHI TEAM LEADER |

REPUBLIC OF THE PHILIPPINES
DEPARTMENT OF PUBLIC WORKS AND HIGHWAYS

| PJHL – PMO | BUREAU OF DESIGN | | OFFICE OF THE SECRETARY | |
|---|---|---|---|---|
| Submitted By: | Reviewed By: | Recommended By: | Recommended By: (See cover sheet for Signature) | Approved By: (See cover sheet for Signature/Approval) |
| DANILO C. TRAJANO | JOSEFINA M. ALAGAR | GILBERTO S. REYES | MANUEL M. BONOAN | SIMEON A. DATUMANONG |
| Project Director | Chief, Highways Division | OIC, Director IV | Undersecretary | Secretary |

PROJECT AND LOCATION :
THE DETAILED DESIGN STUDY ON UPGRADING INTER-URBAN HIGHWAY SYSTEM ALONG THE PAN-PHILIPPINE HIGHWAY (Plaridel, Cabanatuan and San Jose Bypasses)
CABANATUAN BYPASS - CONTRACT PACKAGE I

SCALE : 1:100 FULL SIZE A1

SHEET CONTENTS :
DRAINAGE CROSS-SECTION
ALONG BYPASS ( ULTIMATE STAGE )
STA. 109+574 - STA. 109+912

SHEET NO. : DC-16

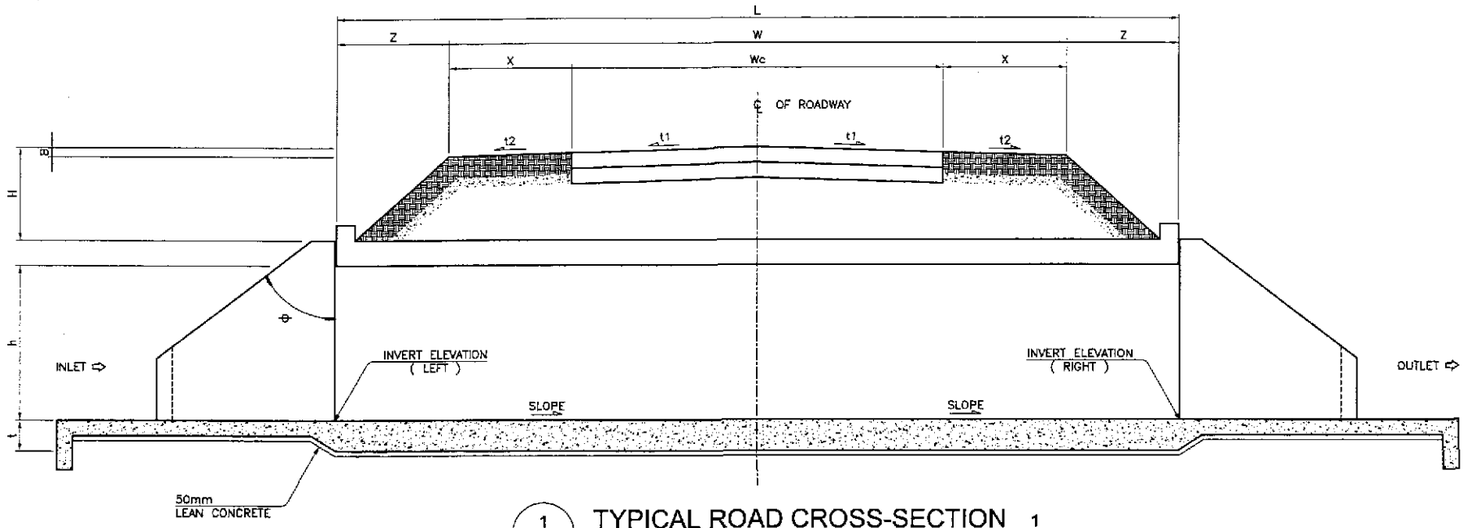


1 DS-01 TYPICAL ROAD CROSS-SECTION 1
NOT TO SCALE

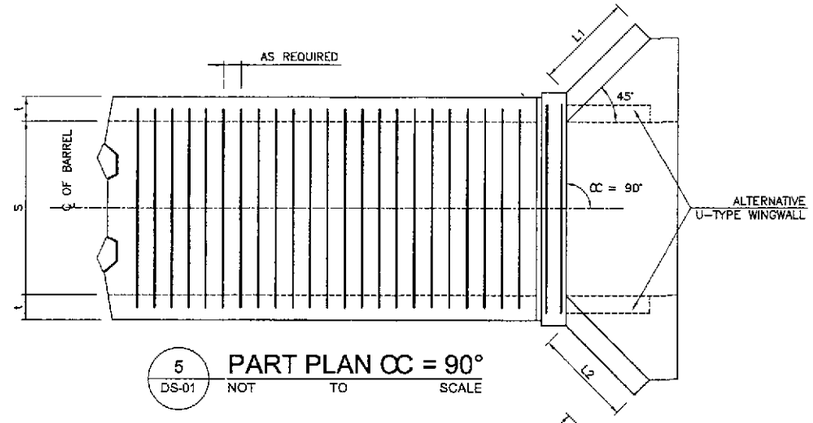


5 DS-01 PART PLAN CC = 90°
NOT TO SCALE

LEGEND :

| | | |
|---|---|---|
| W | — | WIDTH OF ROADWAY FORMATION |
| X | — | WIDTH OF SHOULDER |
| Wc | — | WIDTH OF CARRIAGEWAY |
| H | — | COVER ABOVE THE CULVERT |
| L | — | TOTAL LENGTH OF BARREL |
| t1 | — | SLOPE OF CARRIAGEWAY |
| t2 | — | SLOPE OF SHOULDER |
| Z | — | $[(H+t) - (B+200)] \tan \theta$ |
| B | — | $xt_2+0.5t_1Wc$ |
| h | — | HEIGHT OF CULVERT OPENING |
| t | — | THICKNESS OF CULVERT WALL OR SLAB |
| θ | — | SLOPE OF EMBANKMENT |
| CC | — | ANGLE OF SKEW |

| HORIZONTAL SKEW ANGLE CC | L ( mm ) |
|---|---|
| 90° | W+2tan θ [(H+t) − (B+200)] |
| 60° | 1.1547 (W+2tan θ [(H+t)−(B+200)]) |
| 45° | 1.4142 (W+2tan θ [(H+t)−(B+200)]) |

NOTES:

1. ALL DIMENSIONS ARE IN MILLIMETERS UNLESS OTHERWISE SPECIFIED.
3. MINIMUM CONCRETE COVER SHALL BE 40 CLEAR. WHEN HEIGHT OF FILL H=0 INCREASE COVER BY 30.

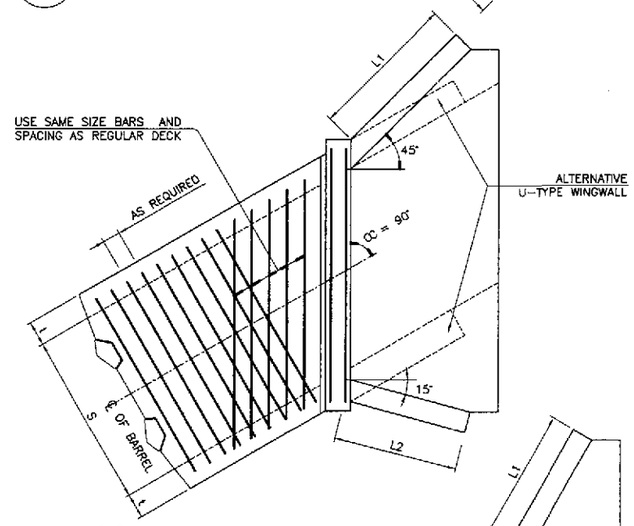


6 DS-01 PART PLAN CC = 60°
NOT TO SCALE

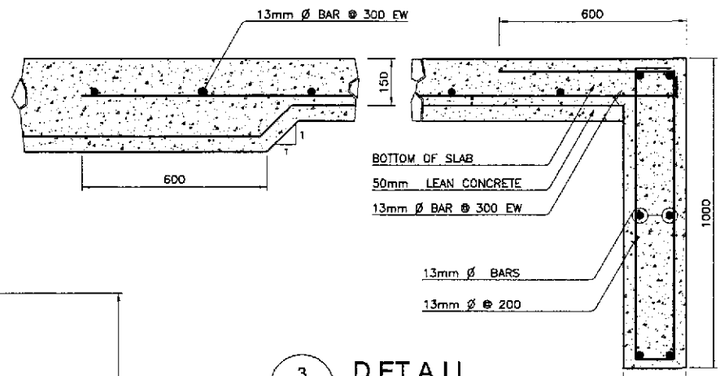


3 DS-01 DETAIL
NOT TO SCALE

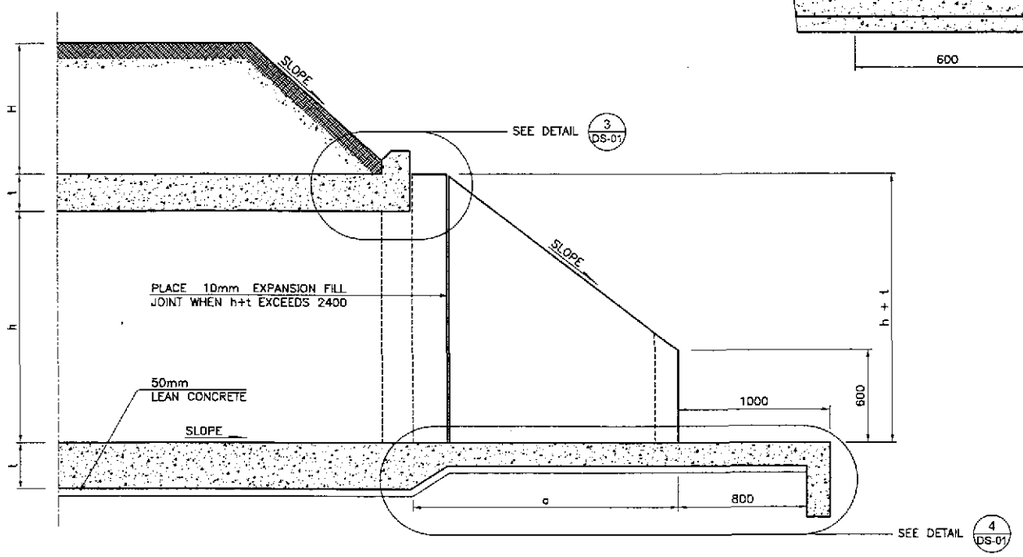


2 DS-01 PART SECTION ALONG ℄ OF CULVERT
NOT TO SCALE

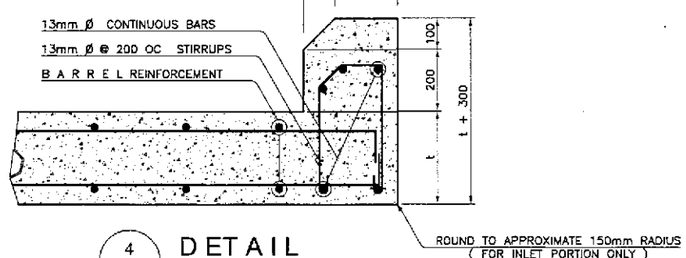


4 DS-01 DETAIL
NOT TO SCALE

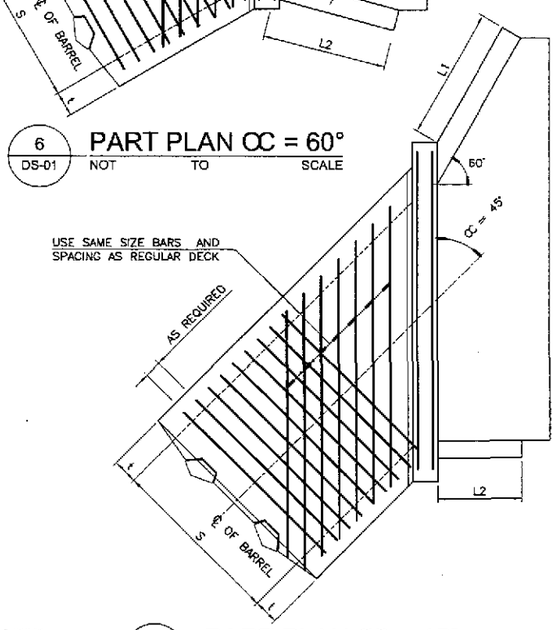


7 DS-01 PART PLAN CC = 45°
NOT TO SCALE

# STANDARD DETAILS OF REINFORCED CONCRETE BOX CULVERT (RCBC)

JICA
JAPAN INTERNATIONAL COOPERATION AGENCY
KEI KATAHIRA & ENGINEERS INTERNATIONAL
YEC YACHIYO ENGINEERING CO., LTD.

| | DATE | SIGNATURE |
|---|---|---|
| DESIGNED | 10/5/02 | |
| CHECKED | 10/15/02 | |
| SUBMITTED | 10/16/02 | TEAM LEADER |

REPUBLIC OF THE PHILIPPINES
DEPARTMENT OF PUBLIC WORKS AND HIGHWAYS

| PJHL – PMO | BUREAU OF DESIGN | | OFFICE OF THE SECRETARY | |
|---|---|---|---|---|
| Submitted By: | Reviewed By: | Recommended By: | Recommended By: (See cover sheet for Signature) | Approved By: (See cover sheet for Signature/Approval) |
| DANILO C. TRAJANO | JOSEFINA M. ALAGAR | GILBERTO S. REYES | MANUEL M. BONDAN | SIMEON A. DATUMANONG |
| Project Director | Chief, Highways Division | OIC, Director IV | Undersecretary | Secretary |

PROJECT AND LOCATION :
THE DETAILED DESIGN STUDY ON UPGRADING INTER-URBAN HIGHWAY SYSTEM ALONG THE PAN-PHILIPPINE HIGHWAY (Plaridel, Cabanatuan and San Jose Bypasses)
CABANATUAN BYPASS - CONTRACT PACKAGE I

SCALE : 1:100 FULL SIZE A1

SHEET CONTENTS : STANDARD DETAILS OF REINFORCED CONCRETE BOX CULVERT (RCBC)

SHEET NO. : DS-01

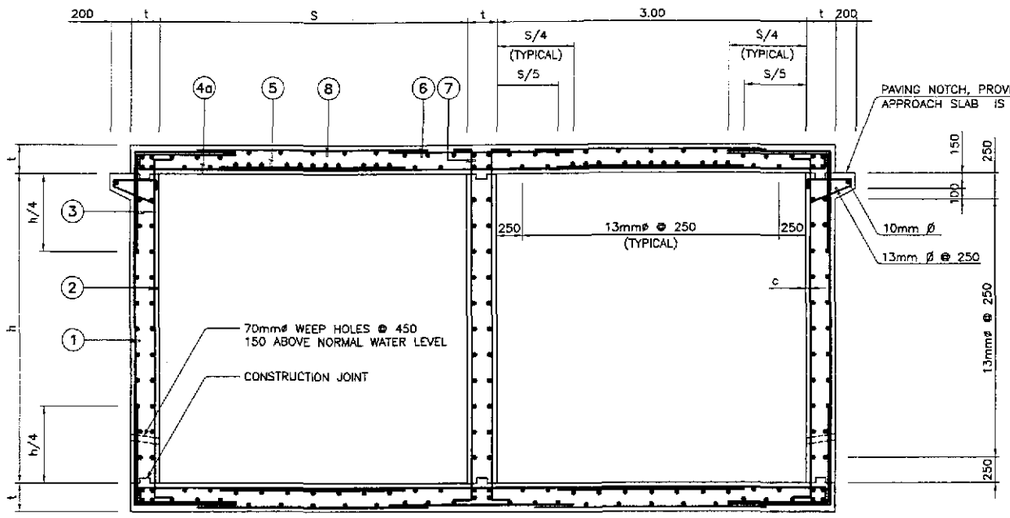


2 DS-02 **DOUBLE BARREL SECTION**
SCALE 1:30

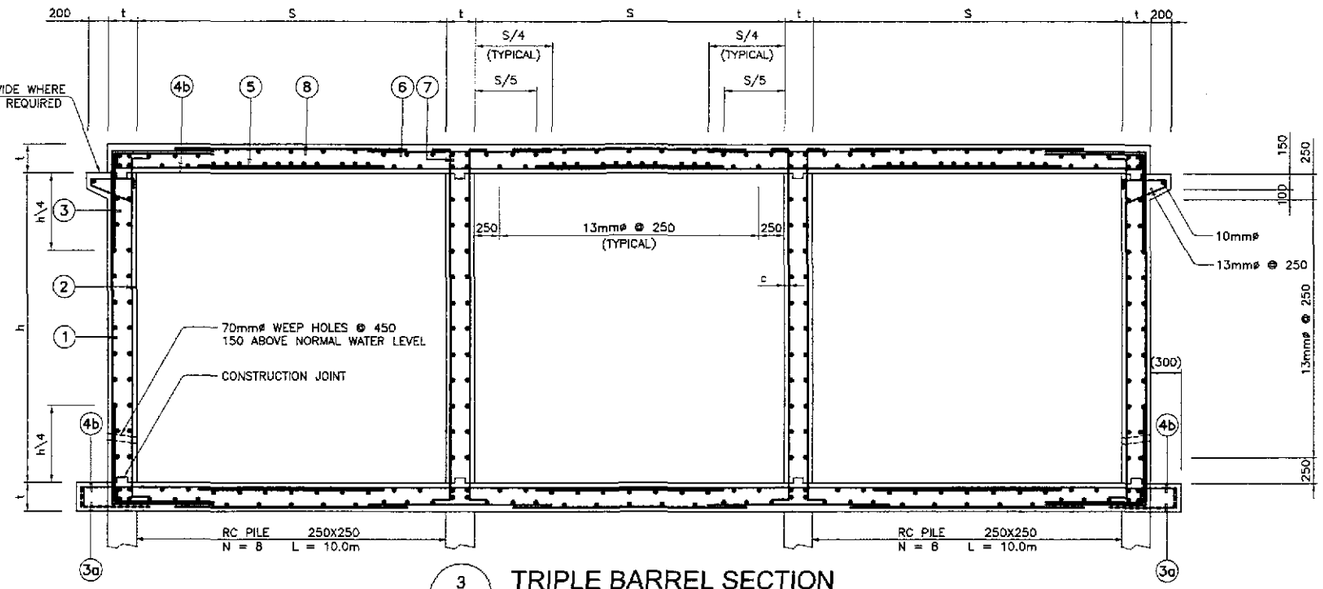


3 DS-02 **TRIPLE BARREL SECTION**
SCALE 1:30

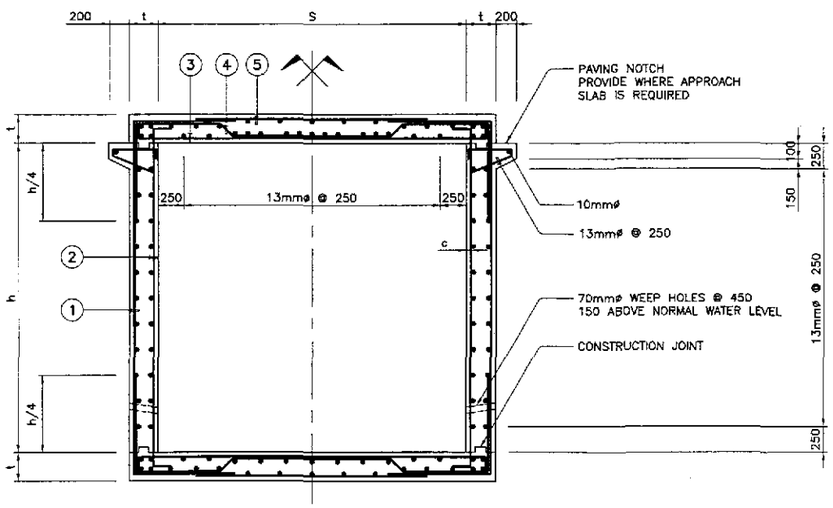


1 DS-02 **SINGLE BARREL SECTION**
SCALE 1:30

NOTE:

FOR WALL THICKNESS LESS THAN 240, STAGGER HORIZONTAL REINFORCEMENT AS SHOWN.

LEGEND:

c = CONCRETE CLEAR COVER (50mm)

o----- ADDITIONAL REBARS IF FILL IS LESS THAN 500mm

## BAR BENDING DIAGRAM

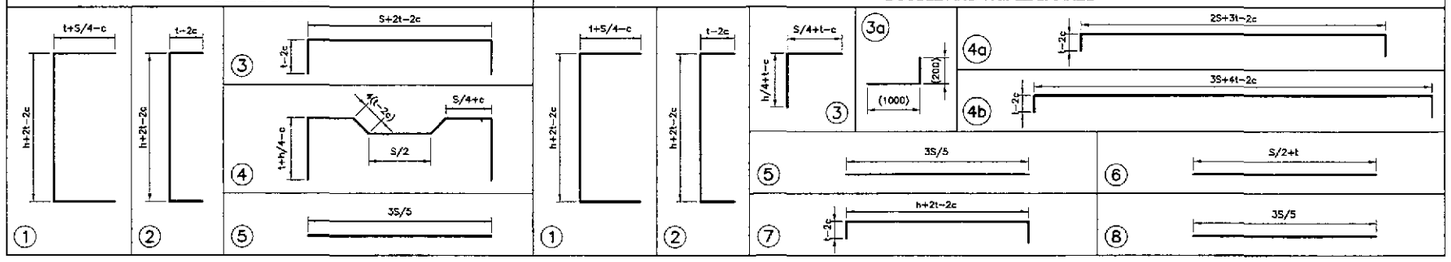


| CLEAR | | SINGLE BARREL BOX CULVERT | | | | | | | | | | | DOUBLE AND TRIPLE BARREL BOX CULVERT | | | | | | | | | | | | | | | |
|---|---|---|---|---|---|---|---|---|---|---|---|---|---|---|---|---|---|---|---|---|---|---|---|---|---|---|---|---|
| SPAN S | HEIGHT h | t | BAR 1 | | BAR 2 | | BAR 3 | | BAR 4 | | BAR 5 | | t | BAR 1 | | BAR 2 | | BAR 3 | | BAR 4 | | BAR 5 | | BAR 6 | | BAR 7 | | BAR 8 | |
| | | | ø | SPACING | ø | SPACING | ø | SPACING | ø | SPACING | ø | SPACING | | ø | SPACING | ø | SPACING | ø | SPACING | ø | SPACING | ø | SPACING | ø | SPACING | ø | SPACING | ø | SPACING |
| 1250 | 1000 | 180 | 13 | 300 | 13 | 300 | 13 | 300 | 13 | 300 | 13 | 300 | 180 | 13 | 300 | 13 | 300 | 13 | 300 | 13 | 300 | 13 | 300 | 20 | 200 | 13 | 300 | 13 | 300 |
| | 1250 | 180 | 13 | 300 | 13 | 300 | 13 | 300 | 13 | 300 | 13 | 300 | 180 | 13 | 300 | 16 | 300 | 13 | 300 | 13 | 300 | 13 | 300 | 20 | 200 | 13 | 300 | 13 | 300 |
| | 1500 | 180 | 13 | 300 | 13 | 280 | 13 | 300 | 13 | 300 | 13 | 300 | 180 | 13 | 300 | 16 | 280 | 13 | 300 | 13 | 300 | 13 | 300 | 20 | 200 | 13 | 300 | 13 | 300 |
| | 1800 | 180 | 13 | 300 | 13 | 260 | 13 | 300 | 13 | 300 | 13 | 300 | 180 | 13 | 300 | 16 | 260 | 13 | 300 | 13 | 300 | 13 | 300 | 20 | 200 | 13 | 300 | 13 | 300 |
| 1500 | 1000 | 180 | 16 | 240 | 16 | 300 | 16 | 240 | 16 | 240 | 13 | 300 | 200 | 16 | 300 | 16 | 300 | 16 | 300 | 16 | 300 | 16 | 300 | 20 | 200 | 13 | 300 | 13 | 280 |
| | 1250 | 180 | 16 | 240 | 16 | 300 | 16 | 240 | 16 | 240 | 13 | 300 | 200 | 16 | 300 | 16 | 300 | 16 | 300 | 16 | 300 | 16 | 300 | 20 | 200 | 13 | 300 | 13 | 280 |
| | 1500 | 180 | 16 | 240 | 16 | 280 | 16 | 240 | 16 | 240 | 13 | 300 | 200 | 16 | 300 | 16 | 280 | 16 | 300 | 16 | 300 | 16 | 300 | 20 | 200 | 13 | 300 | 13 | 280 |
| | 1800 | 180 | 16 | 240 | 16 | 280 | 16 | 240 | 16 | 240 | 13 | 300 | 200 | 16 | 300 | 16 | 260 | 16 | 300 | 16 | 300 | 16 | 300 | 20 | 200 | 13 | 300 | 13 | 280 |
| 1800 | 1250 | 200 | 16 | 260 | 16 | 300 | 16 | 260 | 16 | 260 | 13 | 280 | 250 | 16 | 300 | 16 | 300 | 16 | 300 | 16 | 300 | 16 | 300 | 20 | 190 | 13 | 300 | 13 | 220 |
| | 1500 | 200 | 16 | 260 | 16 | 300 | 16 | 260 | 16 | 260 | 13 | 280 | 250 | 16 | 300 | 16 | 280 | 16 | 300 | 16 | 300 | 16 | 300 | 20 | 190 | 13 | 300 | 13 | 220 |
| | 1800 | 200 | 16 | 260 | 16 | 280 | 16 | 260 | 16 | 260 | 13 | 280 | 250 | 16 | 300 | 16 | 280 | 16 | 300 | 16 | 300 | 16 | 300 | 20 | 190 | 13 | 300 | 13 | 220 |
| | 2100 | 200 | 16 | 260 | 16 | 260 | 16 | 260 | 16 | 260 | 13 | 280 | 250 | 16 | 300 | 16 | 260 | 16 | 300 | 16 | 300 | 16 | 300 | 20 | 190 | 13 | 300 | 13 | 220 |
| 2400 | 1800 | 220 | 16 | 220 | 16 | 280 | 16 | 220 | 16 | 220 | 13 | 240 | 300 | 16 | 300 | 16 | 280 | 16 | 300 | 16 | 300 | 16 | 300 | 20 | 120 | 13 | 300 | 13 | 200 |
| | 2100 | 220 | 16 | 220 | 16 | 260 | 16 | 220 | 16 | 220 | 13 | 240 | 300 | 16 | 300 | 16 | 280 | 16 | 300 | 16 | 300 | 16 | 300 | 20 | 120 | 13 | 300 | 13 | 200 |
| | 2400 | 220 | 16 | 220 | 16 | 200 | 16 | 220 | 16 | 220 | 13 | 240 | 300 | 16 | 300 | 16 | 280 | 16 | 300 | 16 | 300 | 16 | 300 | 20 | 120 | 13 | 300 | 13 | 200 |
| | 2750 | 220 | 16 | 200 | 16 | 180 | 16 | 200 | 16 | 200 | 13 | 240 | 300 | 16 | 300 | 16 | 280 | 16 | 300 | 16 | 300 | 16 | 300 | 20 | 120 | 13 | 300 | 13 | 200 |
| 3000 | 2100 | 280 | 16 | 260 | 16 | 260 | 16 | 260 | 16 | 260 | 13 | 200 | 300 | 20 | 300 | 16 | 280 | 20 | 300 | 20 | 300 | 20 | 300 | 25 | 170 | 13 | 300 | 13 | 200 |
| | 2400 | 280 | 16 | 260 | 16 | 260 | 16 | 260 | 16 | 260 | 13 | 200 | 300 | 20 | 300 | 16 | 280 | 20 | 300 | 20 | 300 | 20 | 300 | 25 | 170 | 13 | 300 | 13 | 200 |
| | 2750 | 280 | 16 | 200 | 16 | 240 | 16 | 220 | 16 | 200 | 13 | 200 | 300 | 20 | 300 | 16 | 200 | 20 | 300 | 20 | 300 | 20 | 300 | 25 | 170 | 16 | 300 | 13 | 200 |
| | 3000 | 280 | 16 | 200 | 16 | 220 | 16 | 200 | 16 | 200 | 13 | 200 | 300 | 20 | 300 | 16 | 200 | 20 | 300 | 20 | 300 | 20 | 300 | 25 | 170 | 16 | 300 | 13 | 200 |
| 4000 | 2500 | | | | | | | | | | | | 300 | 20 | 300 | 16 | 200 | 20 | 300 | 20 | 300 | 20 | 300 | 25 | 170 | 16 | 300 | 13 | 200 |

# STANDARD DETAILS OF REINFORCED CONCRETE BOX CULVERT (RCBC) BARRELS

JICA
JAPAN INTERNATIONAL COOPERATION AGENCY
KEI KATAHIRA & ENGINEERS INTERNATIONAL
YEC YACHIYO ENGINEERING CO., LTD.

| | DATE | SIGNATURE |
|---|---|---|
| DESIGNED | 10/15/02 | P. SIMA MARIA |
| CHECKED | 10/15/02 | H. HAKIM |
| SUBMITTED | 10/16/02 | M. SAKAGUCHI TEAM LEADER |

REPUBLIC OF THE PHILIPPINES
DEPARTMENT OF PUBLIC WORKS AND HIGHWAYS

| PJHL – PMO | BUREAU OF DESIGN | | OFFICE OF THE SECRETARY | |
|---|---|---|---|---|
| Submitted By: | Reviewed By: | Recommended By: | Recommended By: (See cover sheet for Signature) | Approved By: (See cover sheet for Signature/Approval) |
| DANILO C. TRAJANO Project Director | JOSEFINA M. ALAGAR Chief, Highways Division | GILBERTO S. REYES OIC, Director IV | MANUEL M. BONOAN Undersecretary | SIMEON A. DATUMANONG Secretary |

PROJECT AND LOCATION :
THE DETAILED DESIGN STUDY ON UPGRADING INTER-URBAN HIGHWAY SYSTEM ALONG THE PAN-PHILIPPINE HIGHWAY (Plaridel, Cabanatuan and San Jose Bypasses)
CABANATUAN BYPASS - CONTRACT PACKAGE I

SCALE : 1:30 FULL SIZE A1

SHEET CONTENTS : STANDARD DETAILS OF RCBC BARRELS

SHEET NO. : DS-02

## QUANTITIES FOR STANDARD BOX CULVERTS

| CLEAR SPAN S | CLEAR HEIGHT h | QUANTITY PER METER OF BARREL | | | | | |
|---|---|---|---|---|---|---|---|
| | | SINGLE | | DOUBLE | | TRIPLE | |
| | | CONCRETE (m3) | REINFORCEMENT (kg) | CONCRETE (m3) | REINFORCEMENT (kg) | CONCRETE (m3) | REINFORCEMENT (kg) |
| 1250 | 1000 | 0.94 | 113.32 | 1.63 | 209.22 | 2.33 | 296.18 |
| | 1250 | 1.03 | 121.63 | 1.77 | 216.22 | 2.51 | 312.39 |
| | 1500 | 1.12 | 130.98 | 1.90 | 232.07 | 2.69 | 330.39 |
| | 1800 | 1.23 | 141.71 | 2.07 | 249.50 | 2.91 | 352.09 |
| 1500 | 1000 | 1.03 | 165.90 | 2.04 | 253.90 | 2.92 | 354.80 |
| | 1250 | 1.12 | 177.10 | 2.19 | 256.00 | 3.12 | 370.20 |
| | 1500 | 1.21 | 189.60 | 2.34 | 279.60 | 3.32 | 387.10 |
| | 1800 | 1.32 | 202.50 | 2.52 | 296.20 | 3.56 | 407.10 |
| 1800 | 1250 | 1.38 | 189.20 | 3.11 | 312.30 | 4.45 | 437.00 |
| | 1500 | 1.48 | 199.90 | 3.30 | 326.10 | 4.70 | 454.00 |
| | 1800 | 1.60 | 214.80 | 3.53 | 342.80 | 5.00 | 475.20 |
| | 2100 | 1.72 | 239.60 | 3.75 | 357.50 | 5.30 | 494.40 |
| 2400 | 1800 | 2.04 | 272.70 | 5.04 | 431.80 | 7.20 | 619.10 |
| | 2100 | 2.17 | 288.50 | 5.31 | 447.30 | 7.56 | 637.10 |
| | 2400 | 2.31 | 314.10 | 5.58 | 461.80 | 7.92 | 656.40 |
| | 2750 | 2.46 | 356.70 | 5.90 | 478.60 | 8.34 | 677.70 |
| 3000 | 2100 | 3.17 | 308.70 | 6.03 | 635.70 | 8.64 | 899.70 |
| | 2400 | 3.34 | 321.30 | 6.30 | 652.00 | 9.00 | 919.60 |
| | 2750 | 3.53 | 374.40 | 6.62 | 705.60 | 9.42 | 895.00 |
| | 3000 | 3.67 | 413.50 | 6.84 | 721.60 | 9.72 | 1015.40 |

## QUANTITIES FOR STANDARD WINGWALLS

| m (meter) | h+t (meter) | L (meter) | QUANTITY PER WINGWALL AND APRON SLAB | | | | | |
|---|---|---|---|---|---|---|---|---|
| | | | SINGLE | | DOUBLE | | TRIPLE | |
| | | | CONCRETE (m3) | REINFORCEMENT (kg) | CONCRETE (m3) | REINFORCEMENT (kg) | CONCRETE (m3) | REINFORCEMENT (kg) |
| 1.37 | 1.18 | 1.23 | 2.41 | 150 | 2.94 | 180 | 3.48 | 220 |
| 1.75 | 1.43 | 1.76 | 3.48 | 220 | 4.08 | 265 | 4.72 | 300 |
| 2.12 | 1.68 | 2.29 | 4.66 | 300 | 5.36 | 350 | 6.06 | 395 |
| 2.57 | 1.98 | 2.93 | 6.22 | 405 | 7.01 | 450 | 7.80 | 500 |
| 1.37 | 1.18 | 1.23 | 2.50 | 140 | 3.26 | 180 | 3.88 | 220 |
| 1.75 | 1.43 | 1.76 | 3.69 | 210 | 4.42 | 250 | 5.16 | 290 |
| 2.12 | 1.68 | 2.29 | 4.78 | 270 | 5.73 | 320 | 6.56 | 360 |
| 2.57 | 1.98 | 2.93 | 6.35 | 350 | 7.42 | 410 | 8.37 | 460 |
| 1.78 | 1.45 | 1.80 | 3.81 | 210 | 4.98 | 280 | 5.90 | 330 |
| 2.15 | 1.70 | 2.33 | 5.03 | 280 | 6.33 | 350 | 7.36 | 400 |
| 2.60 | 2.00 | 2.97 | 6.48 | 360 | 8.09 | 450 | 9.26 | 510 |
| 3.05 | 2.30 | 3.61 | 8.37 | 460 | 10.00 | 550 | 11.31 | 620 |
| 2.63 | 2.02 | 3.01 | 7.08 | 390 | 9.14 | 500 | 10.71 | 590 |
| 3.08 | 2.32 | 3.65 | 9.28 | 510 | 11.61 | 640 | 13.37 | 740 |
| 3.53 | 2.62 | 4.28 | 11.42 | 630 | 13.98 | 770 | 15.92 | 880 |
| 4.06 | 2.97 | 5.03 | 14.17 | 780 | 17.90 | 990 | 19.15 | 1050 |
| 3.17 | 2.38 | 3.78 | 10.08 | 560 | 12.38 | 680 | 14.53 | 800 |
| 3.62 | 2.68 | 4.41 | 12.30 | 680 | 14.83 | 820 | 17.19 | 940 |
| 4.15 | 3.03 | 5.15 | 15.15 | 840 | 17.94 | 990 | 20.57 | 1130 |
| 4.52 | 3.28 | 5.68 | 17.34 | 960 | 20.33 | 1120 | 23.15 | 1270 |

## GENERAL NOTES :

### SPECIFICATION :

AASHTO STANDARD SPECIFICATION FOR HIGHWAY BRIDGES, 16th EDITION 1996.

### DESIGN LOAD :

LIVE LOAD MS-18 (HS 20-44)

### CONCRETE :

ALL CONCRETE SHALL HAVE A MINIMUM COMPRESSION STRENGTH IN 28 DAYS OF f'c = 20.7 MPa (3000psi). ALL EXPOSED CORNERS TO BE CHAMFERED 20 MINIMUM. NO CONSTRUCTION JOINT ARE TO BE MADE EXCEPT WHERE SHOWN. WHEN BOTTOM SLAB IS SUBJECT TO ABRASION ADD 25mm TO BOTTOM SLAB TO INCREASE COVERAGE ON STEEL.

### STEEL REINFORCEMENT :

ALL REINFORCING STEEL TO BE INTERMEDIATE (GRADE 40) ASTM A-615 WITH DEFORMATIONS CONFORMING TO ASTM A-305.

### GENERAL :

IN STATING CULVERT SIZE, GIVE SPAN BY HEIGHT (SPAN FIRST) WHEN HEIGHT OF FILL, H=0 THE TOP OF SURFACE OF THE UPPER SLAB SHALL FOLLOW THE CROWN OF THE FINISHED ROADWAY. THE BOX CULVERT SHALL BE CONSTRUCTED ON A LAYER OF LEAN CONCRETE 50mm MINIMUM THICKNESS.

### LIVE LOAD DISTRIBUTION REINFORCEMENT :

WHEN THERE IS LESS THAN 600mm OF FILL ABOVE TOP SLAB OF CULVERT ADDITIONAL REINFORCEMENT TRANSVERSE TO THE MAIN REINFORCEMENT IS ADDED TO THE BOTTOM OF THE TOP SLAB IN ACCORDANCE WITH AASHTO 1.3.2.E.

### HEIGHT OF FILL :

MAXIMUM HEIGHT OF FILL IS 3000mm ABOVE TOP SLAB, FOR HEIGHT OF FILL GREATER THAN 3000mm SPECIAL DESIGN OF BOX CULVERT SHOULD BE DONE.

| HORIZONTAL SKEW ANGLE α | LENGTH OF WINGWALLS |
|---|---|
| 90° | L1 = L2 = 1.414a |
| 60° | L1 = 1.414a L2 = 1.035a |
| 45° | L1 = 2.000a L2 = a |

**WHERE :**

a = 1.5 (h+t-600) FOR SLOPE 1.5:1

a = 2.0 (h+t-600) FOR SLOPE 2:1

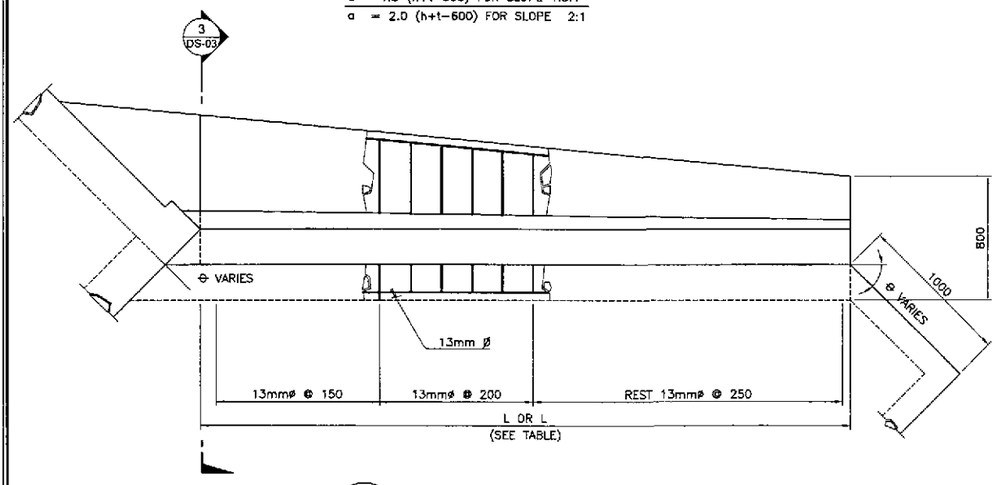


1 DS-03 WINGWALL PLAN SCALE 1:40

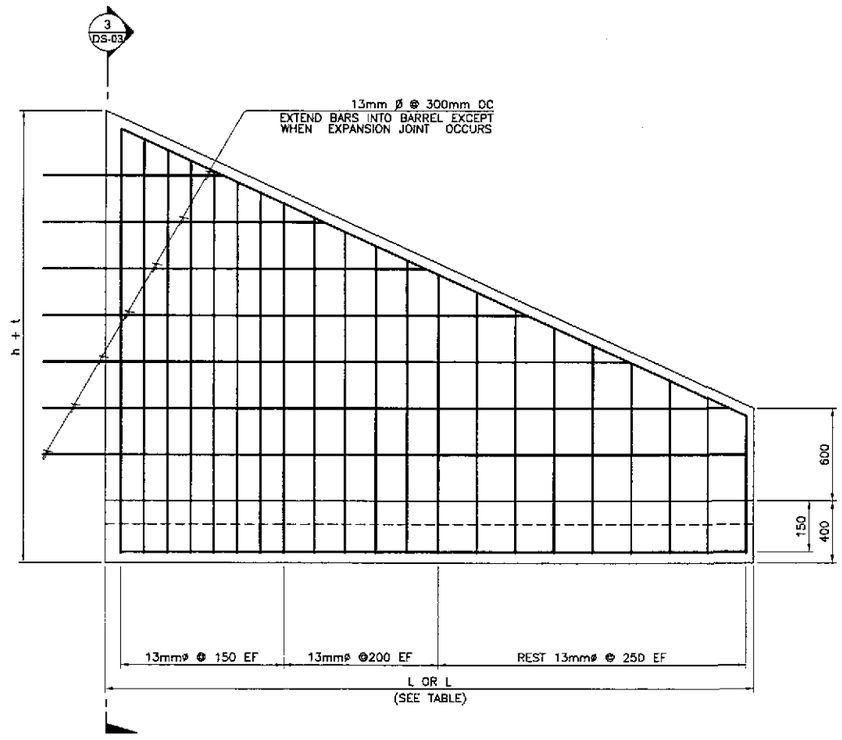


2 DS-03 WINGWALL ELEVATION SCALE 1:40

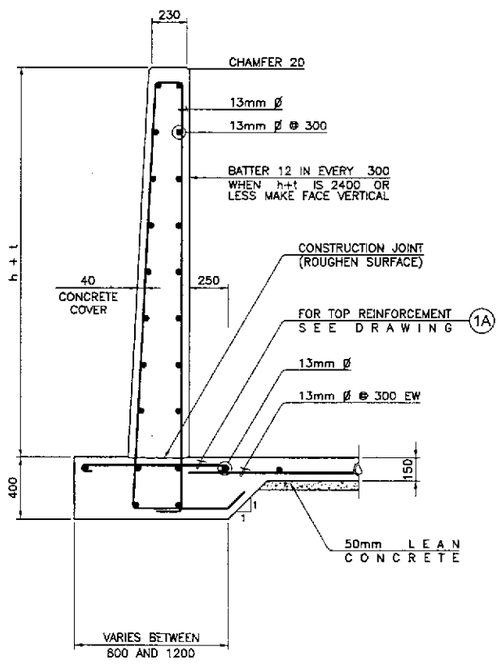


3 DS-03 SECTION SCALE 1:40

# RCBC WINGWALL DETAILS

JICA
JAPAN INTERNATIONAL COOPERATION AGENCY
KEI KATAHIRA & ENGINEERS INTERNATIONAL
yec YACHIYO ENGINEERING CO., LTD.

| | DATE | SIGNATURE |
|---|---|---|
| DESIGNED | 10/15/02 | H. SHIOTA |
| CHECKED | 10/15/02 | H. NAKAMA |
| SUBMITTED | 10/16/02 | M. KUCHI TEAM LEADER |

REPUBLIC OF THE PHILIPPINES
DEPARTMENT OF PUBLIC WORKS AND HIGHWAYS

| PUHL – PMO | BUREAU OF DESIGN | | OFFICE OF THE SECRETARY | |
|---|---|---|---|---|
| Submitted By: | Reviewed By: | Recommended By: | Recommended By: (See cover sheet for Signature) | Approved By: (See cover sheet for Signature/Approval) |
| DANILO C. TRAJANO | JOSEFINA M. ALAGAR | GILBERTO S. REYES | MANUEL M. BONOAN | SIMEON A. DATUMANONG |
| Project Director | Chief, Highways Division | OIC, Director IV | Undersecretary | Secretary |

PROJECT AND LOCATION : THE DETAILED DESIGN STUDY ON UPGRADING INTER-URBAN HIGHWAY SYSTEM ALONG THE PAN-PHILIPPINE HIGHWAY (Plaridel, Cabanatuan and San Jose Bypasses)

CABANATUAN BYPASS - CONTRACT PACKAGE I

SCALE : 1:40 FULL SIZE A1

SHEET CONTENTS : STANDARD DETAILS OF RCBC WINGWALLS

SHEET NO. : DS-03

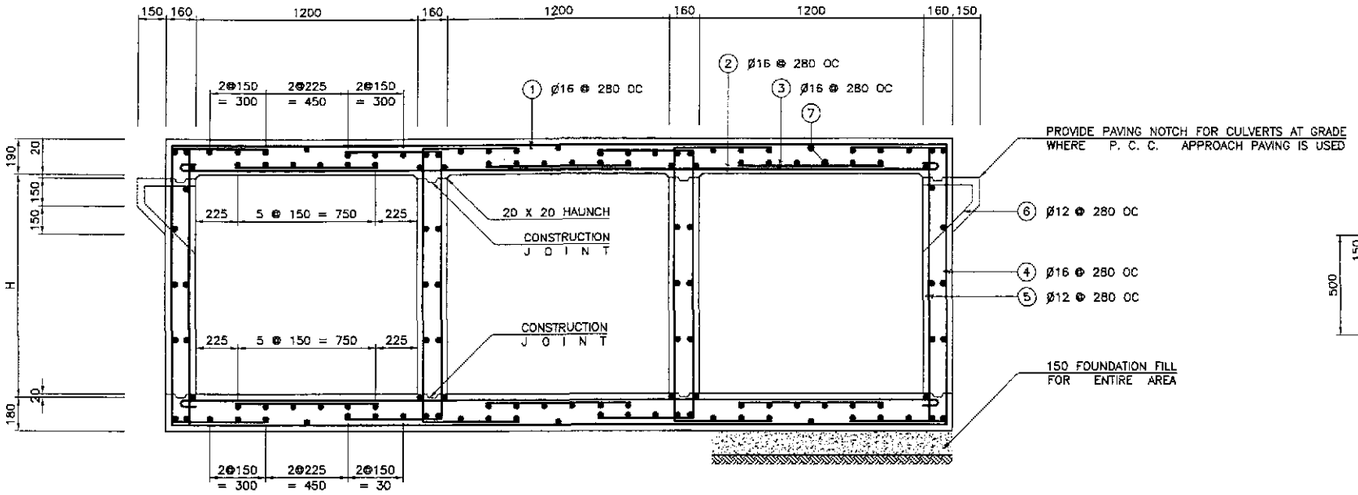


1A DS-04 SECTION ALONG ℄ OF ROADWAY
NOT TO SCALE

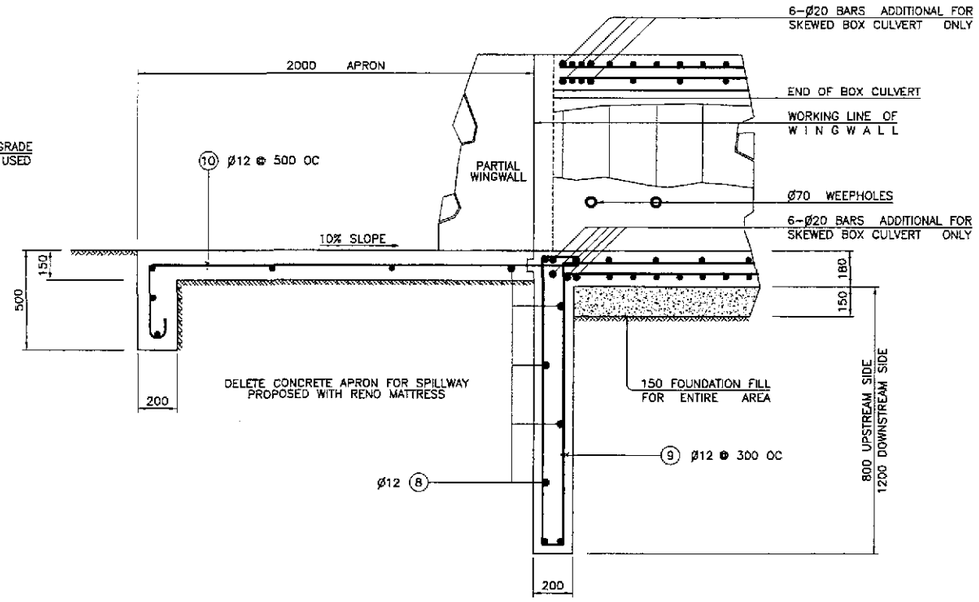


1B DS-04 PARTIAL SECTION A
NOT TO SCALE

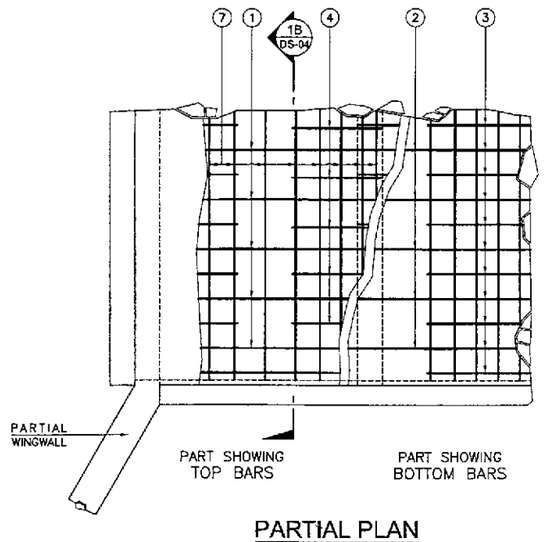


PARTIAL PLAN
NOT TO SCALE

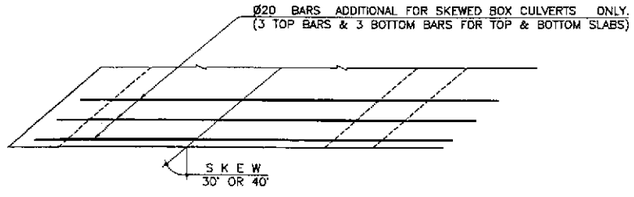


NOTE:
ALL OTHER REINFORCING BARS SHALL BE PERPENDICULAR OR PARALLEL, AS THE CASE MAYBE, TO BOX AXIS.

## BAR BENDING DIAGRAM

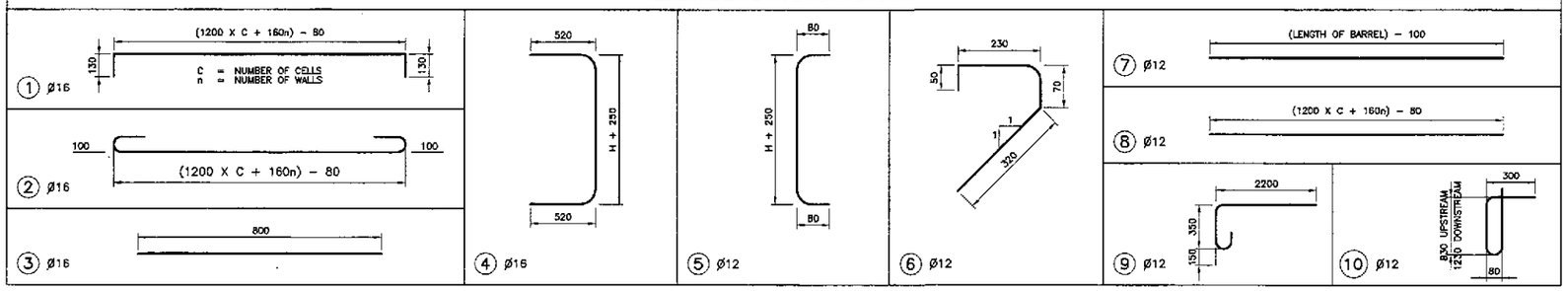


## ESTIMATE OF QUANTITIES (PER LINEAR METER OF LENGTH)

| | SINGLE BARREL | | | | DOUBLE BARREL | | | | TRIPLE BARREL | | | |
|---|---|---|---|---|---|---|---|---|---|---|---|---|
| HEIGHT OF CELL "H" (METER) | CONCRETE CLASS "A" ($m^3$) | REINFORCING STEEL (kg) | EXCAVATION ($m^3$) | FOUNDATION F I L L ($m^3$) | CONCRETE CLASS "A" ($m^3$) | REINFORCING STEEL (kg) | EXCAVATION ($m^3$) | FOUNDATION F I L L ($m^3$) | CONCRETE CLASS "A" ($m^3$) | REINFORCING STEEL (kg) | EXCAVATION ($m^3$) | FOUNDATION F I L L ($m^3$) |
| 1.20 | 0.95 | 132.59 | 0.67 | 0.27 | 1.64 | 217.00 | 1.12 | 0.48 | 2.34 | 299.62 | 1.56 | 0.68 |
| 0.90 | 0.85 | 127.30 | 0.67 | 0.27 | 1.50 | 209.08 | 1.12 | 0.48 | 2.14 | 289.04 | 1.56 | 0.68 |
| 0.60 | 0.75 | 122.01 | 0.67 | 0.27 | 1.35 | 201.15 | 1.12 | 0.48 | 1.95 | 278.48 | 1.56 | 0.68 |

ADDITIONAL WEIGHT OF REINFORCEMENT PER END OF BOX CULVERT
30° SKEW = 98.5 kgs. 30° SKEW = 46.5 kgs.
45° SKEW = 120.5 kgs. 45° SKEW = 57.0 kgs.

## APRON AND END TOE FOR BOTH ENDS

| | SINGLE BARREL | | | DOUBLE BARREL | | | TRIPLE BARREL | | |
|---|---|---|---|---|---|---|---|---|---|
| COMMON TO ALL HEIGHT OF CELL | CONCRETE CLASS "A" ($m^3$) | REINFORCING STEEL (kg) | EXCAVATION ($m^3$) | CONCRETE CLASS "A" ($m^3$) | REINFORCING STEEL (kg) | EXCAVATION ($m^3$) | CONCRETE CLASS "A" ($m^3$) | REINFORCING STEEL (kg) | EXCAVATION ($m^3$) |
| | 1.73 | 57.94 | 3.64 | 3.28 | 111.34 | 6.08 | 4.83 | 164.70 | 8.53 |

1 DS-04 LOW DEPTH TYPE BOX CULVERT
NOT TO SCALE

JICA
JAPAN INTERNATIONAL COOPERATION AGENCY
KEI KATAHIRA & ENGINEERS INTERNATIONAL
YEC YACHIYO ENGINEERING CO., LTD.

| | DATE | SIGNATURE |
|---|---|---|
| DESIGNED | 10/5/02 | |
| CHECKED | 10/15/02 | |
| SUBMITTED | 10/16/02 | |

REPUBLIC OF THE PHILIPPINES
DEPARTMENT OF PUBLIC WORKS AND HIGHWAYS

| PJHL – PMO | BUREAU OF DESIGN | | OFFICE OF THE SECRETARY | |
|---|---|---|---|---|
| Submitted By: | Reviewed By: | Recommended By: | Recommended By: (See cover sheet for Signature) | Approved By: (See cover sheet for Signature/Approval) |
| DANILO C. TRAJANO | JOSEFINA M. ALAGAR | GILBERTO S. REYES | MANUEL M. BONOAN | SIMEON A. DATUMANONG |
| Project Director | Chief, Highways Division | OIC, Director IV | Undersecretary | Secretary |

PROJECT AND LOCATION :
THE DETAILED DESIGN STUDY ON UPGRADING INTER-URBAN HIGHWAY SYSTEM ALONG THE PAN-PHILIPPINE HIGHWAY (Plaridel, Cabanatuan and San Jose Bypasses)
CABANATUAN BYPASS - CONTRACT PACKAGE I

SCALE : NOT TO SCALE / FULL SIZE A1

SHEET CONTENTS :
STANDARD LOW DEPTH TYPE BOX CULVERT
(1 of 2)

SHEET NO. : DS-04

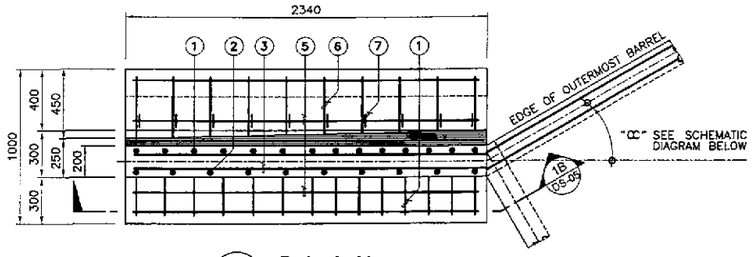


1A DS-05 PLAN SCALE 1:40

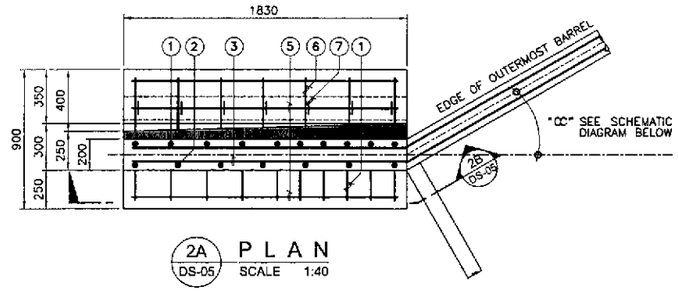


2A DS-05 PLAN SCALE 1:40

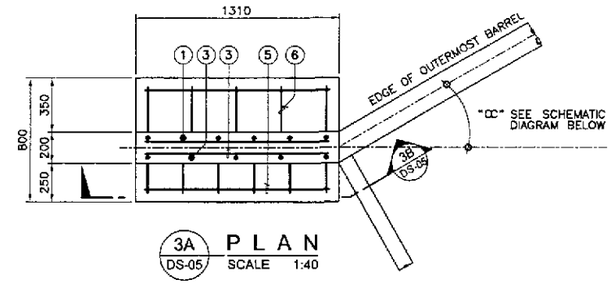


3A DS-05 PLAN SCALE 1:40

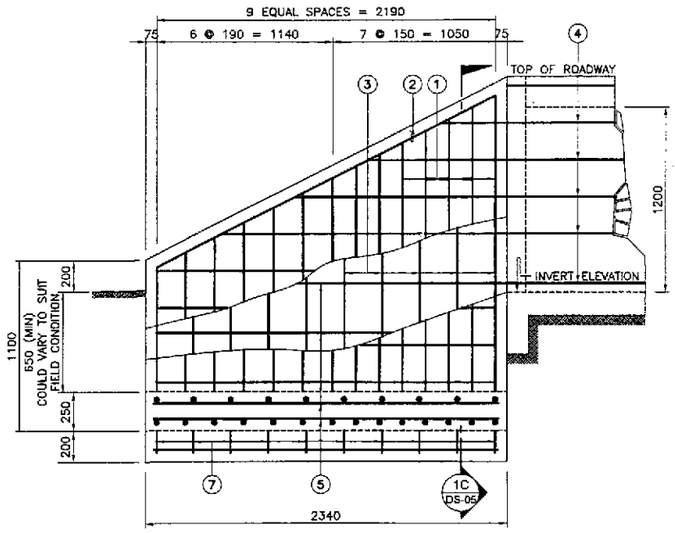


1A DS-05 ELEVATION SCALE 1:40

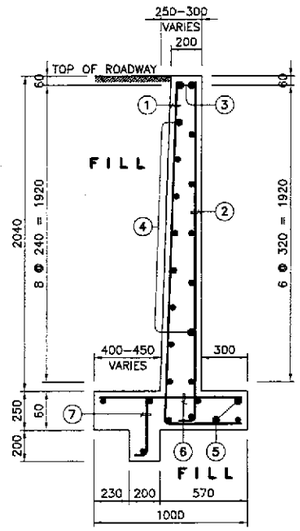


1C DS-05 SECTION SCALE 1:40

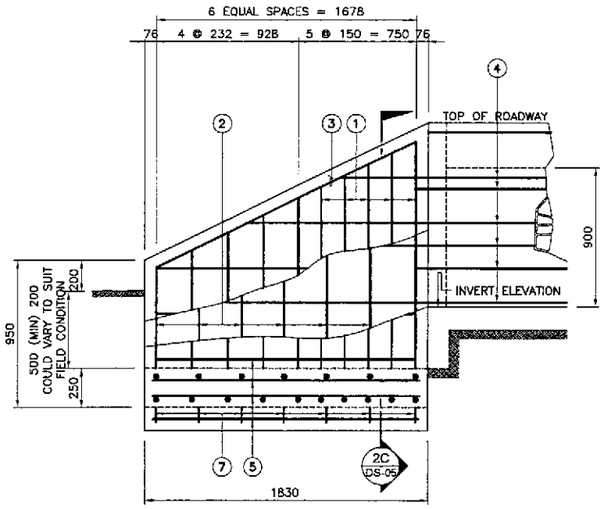


2B DS-05 ELEVATION SCALE 1:40

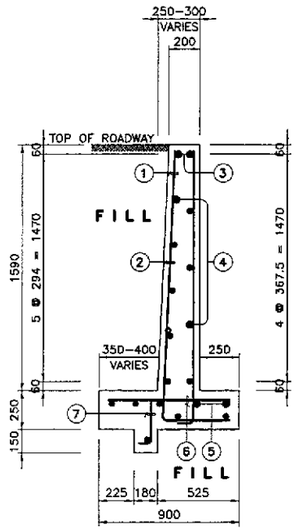


2C DS-05 SECTION SCALE 1:40

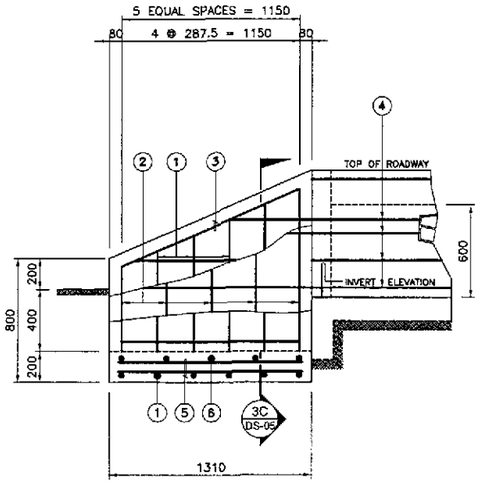


3B DS-05 ELEVATION SCALE 1:40

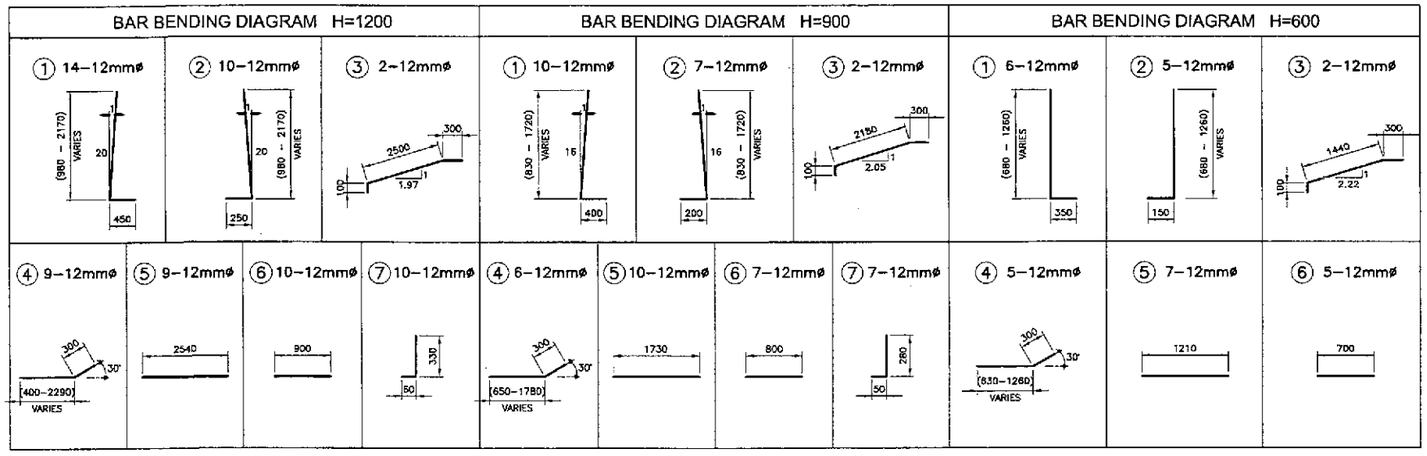


| ESTIMATE OF QUANTITIES PER WINGWALL | | | | |
|---|---|---|---|---|
| HEIGHT (m) | CONCRETE CLASS "A" ($m^3$) | REINFORCEMENT (kg) | EXCAVATION ($m^3$) | FOUNDATION FILL ($m^3$) |
| 1.20 | 2.96 | 102.89 | 5.78 | 0.30 |
| 0.90 | 1.90 | 57.68 | 3.53 | 0.22 |
| 0.60 | 0.88 | 31.43 | 1.97 | 0.15 |

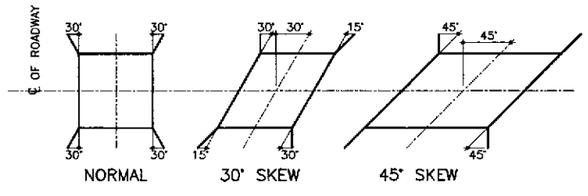


4 DS-05 SCHEMATIC DIAGRAM SHOWING FLARE OF WINGWALL NOT TO SCALE

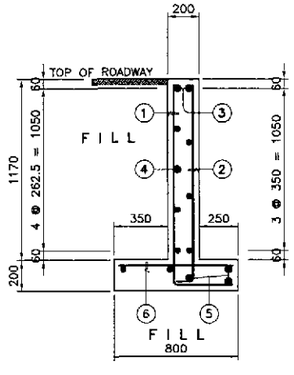


3C DS-05 SECTION SCALE 1:40

# LOW DEPTH TYPE BOX CULVERT

JICA
JAPAN INTERNATIONAL COOPERATION AGENCY
KEI KATAHIRA & ENGINEERS INTERNATIONAL
YEC YACHIYO ENGINEERING CO., LTD.

| | DATE | SIGNATURE |
|---|---|---|
| DESIGNED | 10/15/02 | F. STA. MARIA |
| CHECKED | 10/15/02 | |
| SUBMITTED | 10/16/02 | M. KENECHI TEAM LEADER |

REPUBLIC OF THE PHILIPPINES
DEPARTMENT OF PUBLIC WORKS AND HIGHWAYS

| PJHL – PMO | BUREAU OF DESIGN | | OFFICE OF THE SECRETARY | |
|---|---|---|---|---|
| Submitted By: | Reviewed By: | Recommended By: | Recommended By: (See cover sheet for Signature) | Approved By: (See cover sheet for Signature/Approval) |
| DANILO C. TRAJANO Project Director | JOSEFINA M. ALAGAR Chief, Highways Division | GILBERTO S. REYES OIC, Director IV | MANUEL M. BONDAN Undersecretary | SIMEON A. DATUMANONG Secretary |

| PROJECT AND LOCATION : | SCALE : | SHEET CONTENTS : | SHEET NO. : |
|---|---|---|---|
| THE DETAILED DESIGN STUDY ON UPGRADING INTER-URBAN HIGHWAY SYSTEM ALONG THE PAN-PHILIPPINE HIGHWAY (Plaridel, Cabanatuan and San Jose Bypasses) | AS SHOWN | STANDARD LOW DEPTH TYPE BOX CULVERT (2 of 2) | DS-05 |
| CABANATUAN BYPASS - CONTRACT PACKAGE I | FULL SIZE A1 | | |

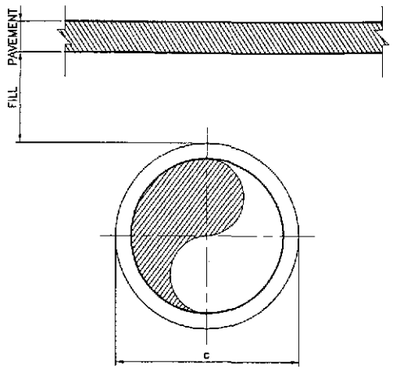


STANDARD STRENGTH PIPES:
FILL 1/2 E.D. FOR FLEXIBLE PAVEMENT OR MIN. OF 0.60 m
0.30 m FOR RIGID PAVEMENT
EXTRA STRENGTH PIPES:
FILL: 0.30 m FOR RIGID AND FLEXIBLE PAVEMENTS

## MINIMUM PIPE COVERING

## DESIGN REQUIREMENT OF REINFORCED CONCRETE PIPE CULVERT

### STANDARD STRENGTH REINFORCED CONCRETE PIPE CULVERTS

| SIZE OF PIPE (mm) | CONCRETE 247 kg/cm² (3,500 lb/in²) | | | | | | | | CONCRETE 317 kg/cm² (4,500 lb/in²) | | | | | | | | STRENGTH TEST REQUIREMENTS kg/m OF PIPE | |
|---|---|---|---|---|---|---|---|---|---|---|---|---|---|---|---|---|---|---|
| | WALL THICKNESS (mm) | TONGUE (mm) | | GROOVE (mm) | | DEPTH (mm) | MINIMUM REINFORCEMENT cm²/m OF PIPE | | WALL THICKNESS (mm) | TONGUE (mm) | | GROOVE (mm) | | DEPTH (mm) | MINIMUM REINFORCEMENT cm²/m OF PIPE ⊛ | | THREE-EDGE-BEARING METHOD ✳ | |
| I.D. | t | A | B | C | E | P | CIRCULAR REINFORCEMENT | ELLIPTICAL REINFORCEMENT | t | A | B | C | E | P | CIRCULAR REINFORCEMENT | ELLIPTICAL REINFORCEMENT | 0.00025mCRACK LOAD | ULTIMATE LOAD |
| 300 | 57 | 344 | 363 | 351 | 370 | 44 | 1 LINE 1.48 | | 51 | 495 | 514 | 502 | 521 | 44 | 1 LINE 1.69 | | 3.355 | 5.218 |
| 380 | 57 | 344 | 363 | 351 | 370 | 44 | 1 LINE 1.90 | | 51 | 495 | 514 | 502 | 521 | 44 | 1 LINE 2.33 | | 3.914 | 6.060 |
| 460 | 64 | 508 | 527 | 514 | 534 | 44 | 1 LINE 2.54 | 1 LINE 2.12 | 51 | 495 | 514 | 502 | 521 | 44 | 1 LINE 2.96 | | 4.473 | 6.709 |
| 610 | 76 | 673 | 692 | 680 | 699 | 44 | 1 LINE 3.60 | 1 LINE 2.75 | 64 | 660 | 680 | 667 | 686 | 44 | 1 LINE 4.23 | 1 LINE 3.60 | 4.473 | 7.454 |
| 760 | 89 | 858 | 857 | 845 | 864 | 51 | 1 LINE 4.66 | 1 LINE 3.60 | 76 | 825 | 845 | 832 | 851 | 51 | 1 LINE 5.92 | 1 LINE 4.44 | 5.032 | 8.573 |
| 910 | 102 | 1003 | 1022 | 1010 | 1029 | 64 | 2 LINES EACH 3.81 | 1 LINE 3.81 | 86 | 988 | 1007 | 994 | 1013 | 64 | 2 LINES EACH 4.86 | 1 LINE 4.66 | 6.038 | 9.840 |
| 1070 | 114 | 1168 | 1187 | 1175 | 1194 | 64 | 2 LINES EACH 4.44 | 1 LINE 4.44 | 95 | 1150 | 1165 | 1156 | 1175 | 64 | 2 LINES EACH 5.29 | 1 LINE 5.29 | 7.045 | 10.958 |
| 1220 | 127 | 1334 | 1353 | 1340 | 1359 | 64 | 2 LINES EACH 5.29 | 1 LINE 5.29 | 108 | 1315 | 1334 | 1321 | 1340 | 64 | 2 LINES EACH 6.56 | 1 LINE 6.56 | 8.051 | 11.927 |
| 1520 | 152 | 1664 | 1683 | 1670 | 1690 | 64 | 2 LINES EACH 6.98 | 1 LINE 6.98 | 127 | 1539 | 1658 | 1645 | 1664 | 64 | 2 LINES EACH 8.68 | 1 LINE 8.68 | 8.945 | 14.909 |

### EXTRA STRENGTH REINFORCED CONCRETE PIPE CULVERTS

| SIZE OF PIPE (mm) | CONCRETE 317 kg/cm² (4,500 lb/in²) | | | | | | | | STRENGTH TEST REQUIREMENTS kg/m OF PIPE | |
|---|---|---|---|---|---|---|---|---|---|---|
| | WALL THICKNESS (mm) | TONGUE (mm) | | GROOVE (mm) | | DEPTH (mm) | MINIMUM REINFORCEMENT cm²/m OF PIPE ○ | | THREE-EDGE-BEARING METHOD | |
| I.D. | t | A | B | C | E | P | CIRCULAR REINFORCEMENT | ELLIPTICAL REINFORCEMENT | 0.00025mCRACK LOAD | LOAD ULTIMATE |
| 300 | — | — | — | — | — | | | | | |
| 380 | — | — | — | — | — | | | | | |
| 460 | — | — | — | — | — | | | | | |
| 610 | 76 | 673 | 692 | 680 | 699 | 44 | 1 LINE 5.50 | 1 LINE 4.23 | 5.964 | 8.945 |
| 760 | 89 | 838 | 857 | 845 | 864 | 51 | 1 LINE 6.56 | 1 LINE 5.08 | 7.454 | 11.182 |
| 910 | 102 | 1003 | 1022 | 1010 | 1029 | 64 | 2 LINES EACH 5.92 | 1 LINE 5.92 | 8.945 | 13.418 |
| 1070 | 114 | 1168 | 1187 | 1175 | 1194 | 64 | 2 LINES EACH 6.98 | 1 LINE 6.98 | 10.436 | 15.655 |
| 1220 | 127 | 1334 | 1353 | 1340 | 1359 | 64 | 2 LINES EACH 8.04 | 1 LINE 8.04 | 11.927 | 17.891 |
| 1520 | 152 | 1664 | 1683 | 1670 | 1690 | 64 | 2 LINES EACH 10.58 | 1 LINE 10.58 | 13.418 | 22.364 |

⊛ THE DISTANCE FROM CENTERLINE OF THE REINFORCEMENT TO THE NEAREST SURFACE OF THE CONCRETE HAS BEEN ASSUMED AS 32mm FOR PIPES WITH A SHELL THICKNESS OF 64mm OR MORE.
✳ TEST LOADS FOR SAND-BEARING TEST SHALL BE ONE AND ONE – HALF TIMES THOSE SPECIFIED IN THIS TABLE FOR THE THREE – EDGE BEARING TEST.

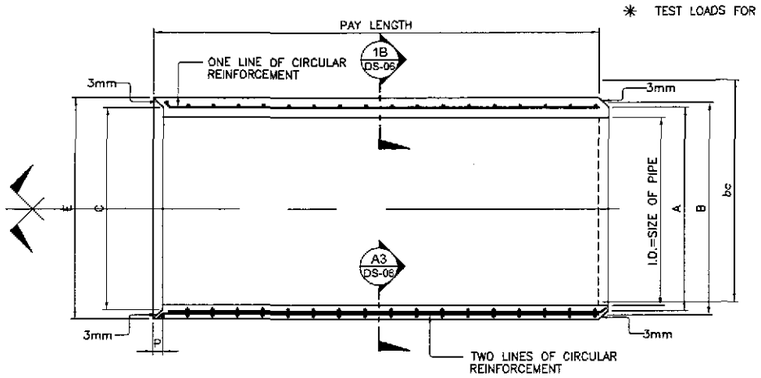


1A DS-06 LONGITUDINAL SECTION NOT TO SCALE

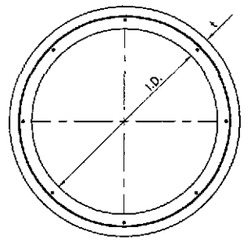


ONE LINE OF CIRCULAR REINFORCEMENT

1B DS-06 SECTION

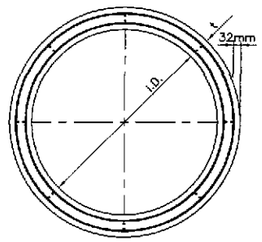


TWO LINES OF CIRCULAR REINFORCEMENT

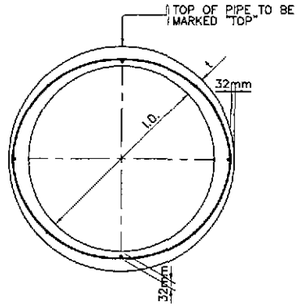


ONE LINE OF ELLIPTICAL REINFORCEMENT

1C DS-06 SECTION

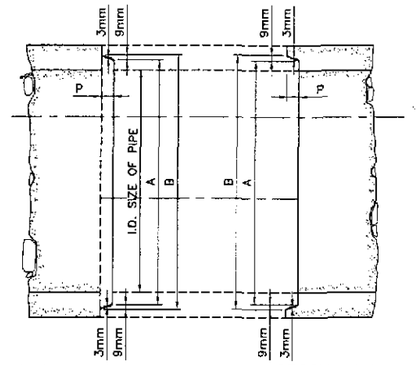


TONGUE END GROOVE END

1D DS-06 SECTION

1 DS-06 STANDARD REINFORCED CONCRETE PIPE CULVERTS SCALE AS SHOWN

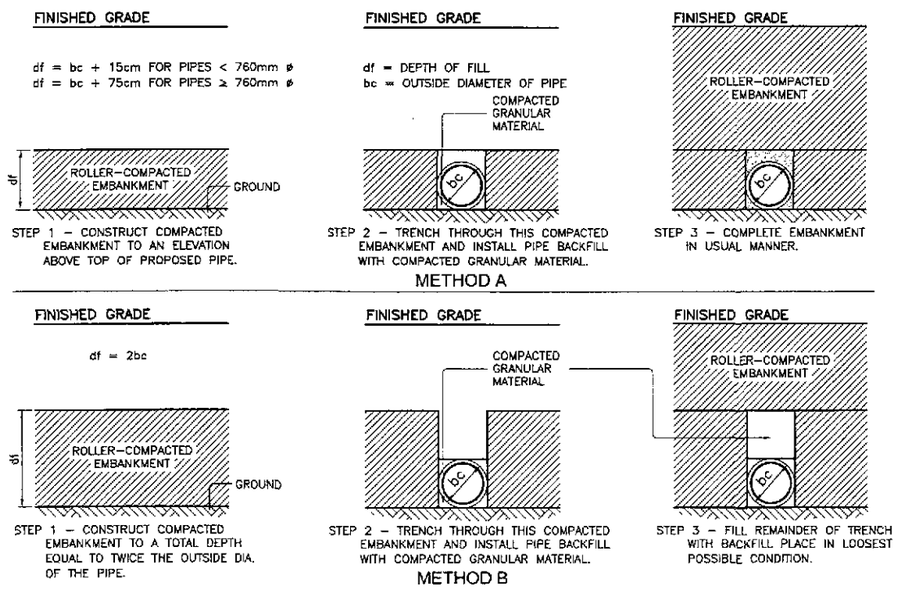


2 DS-06 METHODS OF PIPE INSTALLATION NOT TO SCALE

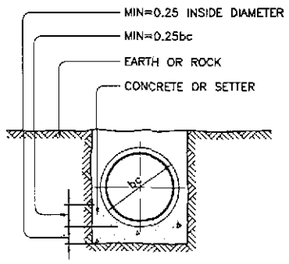


CONCRETE CRADLE BEDDING

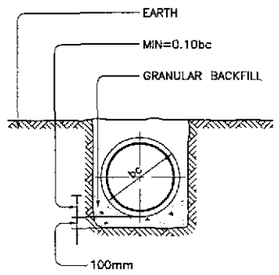


ORDINARY BEDDINGS

3 DS-06 TYPICAL BEDDING FOR CONDUITS NOT TO SCALE

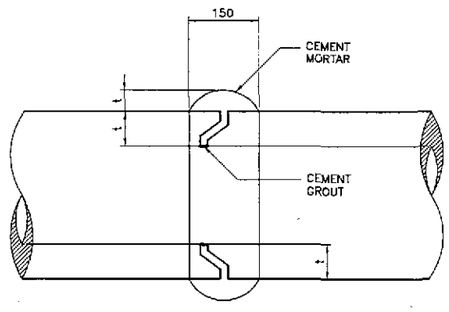


4 DS-06 DETAIL OF PIPE COLLAR NOT TO SCALE

JICA
JAPAN INTERNATIONAL COOPERATION AGENCY
KEI KATAHIRA & ENGINEERS INTERNATIONAL
YEC YACHIYO ENGINEERING CO., LTD.

| | DATE | SIGNATURE |
|---|---|---|
| DESIGNED | 10/5/02 | |
| CHECKED | 10/5/02 | |
| SUBMITTED | 10/10/02 | M. KOBAYASHI TEAM LEADER |

REPUBLIC OF THE PHILIPPINES
DEPARTMENT OF PUBLIC WORKS AND HIGHWAYS

| PJHL – PMO | BUREAU OF DESIGN | | OFFICE OF THE SECRETARY | |
|---|---|---|---|---|
| Submitted By: | Reviewed By: | Recommended By: | Recommended By: (See cover sheet for Signature) | Approved By: (See cover sheet for Signature/Approval) |
| DANILO C. TRAJANO | JOSEFINA M. ALAGAR | GILBERTO S. REYES | MANUEL M. BONOAN | SIMEON A. DATUMANONG |
| Project Director | Chief, Highways Division | OIC, Director IV | Undersecretary | Secretary |

PROJECT AND LOCATION :
THE DETAILED DESIGN STUDY ON UPGRADING INTER-URBAN HIGHWAY SYSTEM ALONG THE PAN-PHILIPPINE HIGHWAY (Plaridel, Cabanatuan and San Jose Bypasses)
CABANATUAN BYPASS - CONTRACT PACKAGE I

SCALE : AS SHOWN FULL SIZE A1

SHEET CONTENTS :
STANDARD RCPC, METHOD OF PIPE INSTALLATION AND TYPICAL BEDDING FOR CONDUITS

SHEET NO. : DS-06

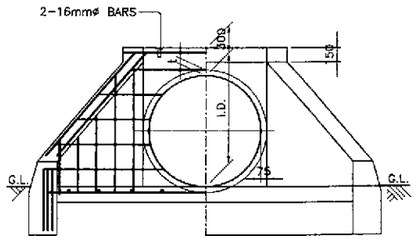


1B DS-07 ELEVATION NOT TO SCALE

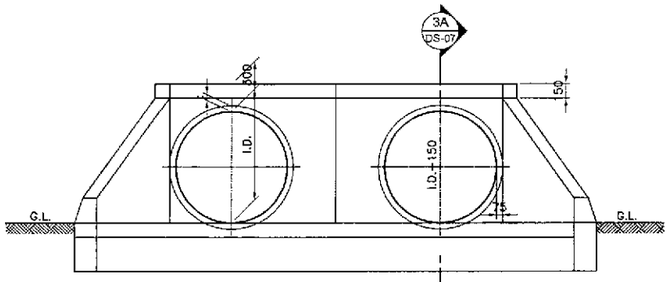


2B DS-07 ELEVATION NOT TO SCALE

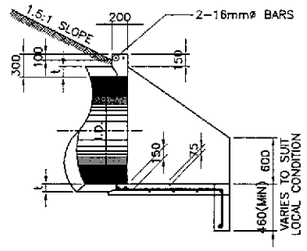


3A DS-07 SECTION NOT TO SCALE

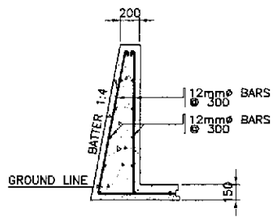


3B DS-07 SECTION NOT TO SCALE

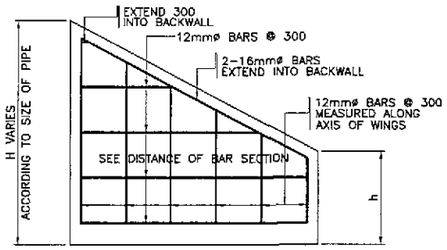


3C DS-07 SECTION NOT TO SCALE

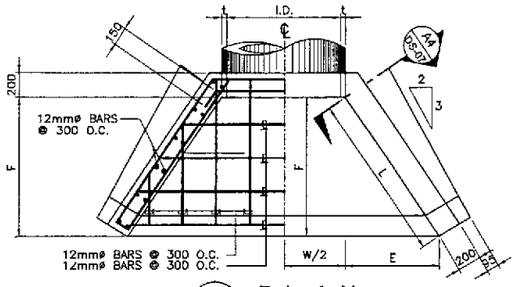


1A DS-07 PLAN N T S

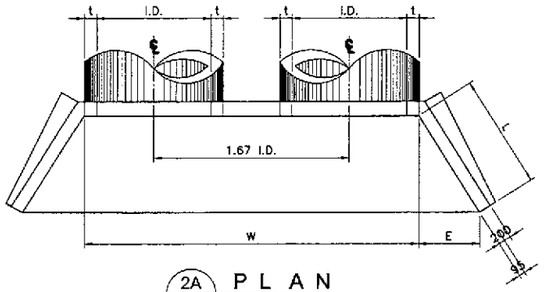


2A DS-07 PLAN N T S

1 DS-07 FLARED TYPE HEADWALL (SINGLE PIPE) SCALE AS SHOWN

2 DS-07 FLARED TYPE HEADWALL (DOUBLE PIPE) SCALE AS SHOWN

## TABLE A ( ONE FLARED TYPE HEADWALL 1.5:1 )

| DIAMETER & THICKNESS (mm) | | DIMENSIONS (mm) | | | | SINGLE PIPE | | | | DOUBLE PIPE | | | | TRIPLE PIPE | | | |
|---|---|---|---|---|---|---|---|---|---|---|---|---|---|---|---|---|---|
| INTERNAL DIAMETER (I.D.) | MIN. THICKNESS SHELL (t) | L | E | F | h | AREA OF WATERWAY $m^3$ | W (mm) | EST. OF QUANTITIES CONC. $m^3$ | EST. OF QUANTITIES REINF. STEEL kg. | AREA OF WATERWAY $m^2$ | W (mm) | EST. OF QUANTITIES CONC. $m^3$ | EST. OF QUANTITIES REINF. STEEL kg. | AREA OF WATERWAY $m^2$ | W (mm) | EST. OF QUANTITIES CONC. $m^3$ | EST. OF QUANTITIES REINF. STEEL kg. |
| 460 | 51 | 710 | 390 | 590 | 0 | 0.17 | 810 | 0.57 | 25.65 | 0.32 | 1380 | 0.83 | 37.35 | 0.51 | 2150 | 1.27 | 57.15 |
| 610 | 64 | 960 | 530 | 800 | 0 | 0.29 | 760 | 0.82 | 36.46 | 0.58 | 1760 | 1.16 | 48.39 | 0.87 | 2800 | 1.75 | 78.75 |
| 910 | 86 | 1510 | 840 | 1260 | 600 | 0.65 | 1070 | 1.55 | 68.92 | 1.30 | 2590 | 2.22 | 92.61 | 1.95 | 4100 | 3.36 | 150.98 |
| 1070 | 95 | 1770 | 980 | 1470 | 600 | 0.90 | 1230 | 2.38 | 107.10 | 1.80 | 3020 | 3.05 | 137.25 | 2.70 | 4800 | 3.96 | 178.20 |
| 1220 | 108 | 2040 | 1130 | 1690 | 600 | 1.17 | 1370 | 2.66 | 110.27 | 2.34 | 3400 | 3.71 | 154.77 | 3.51 | 5360 | 5.36 | 241.34 |
| 1520 | 127 | 2540 | 1410 | 2110 | 600 | 1.81 | 1580 | 3.93 | 174.74 | 3.63 | 4229 | 5.47 | 228.18 | 5.43 | 6760 | 6.76 | 304.20 |

## TABLE C ( ONE L-TYPE HEADWALL)

| DIA. & THICKNESS (mm) | | DIMENSIONS (mm) | | | | | | SINGLE PIPE | |
|---|---|---|---|---|---|---|---|---|---|
| INTERNAL DIAMETER (I.D.) | MIN. THK. SHELL (t) | A | B | B' | H | W | L | CONCRETE $m^3$ mm | REINF. STEEL kg. |
| 460 | 51 | 310 | 350 | 200 | 1070 | 1070 | 1070 | 0.66 | 6 |
| 610 | 64 | 410 | 430 | 200 | 1320 | 1220 | 1220 | 1.06 | 8 |
| 910 | 86 | 610 | 610 | 200 | 1820 | 1820 | 1820 | 2.76 | 11 |
| 1070 | 95 | 710 | 780 | 300 | 2080 | 1970 | VARIES | – | – |
| 1220 | 108 | 810 | 870 | 300 | 2330 | 2120 | VARIES | – | – |
| 1520 | 127 | 1010 | 980 | 300 | 3030 | 2420 | VARIES | – | – |

## TABLE C ( ONE STRAIGHT TYPE HEADWALL )

| DIAMETER & THICKNESS (mm) | | DIMENSIONS (mm) | | | SINGLE PIPE | | | | DOUBLE PIPE | | | | TRIPLE PIPE | | | |
|---|---|---|---|---|---|---|---|---|---|---|---|---|---|---|---|---|
| INTERNAL DIAMETER (I.D.) | MIN. THK. SHELL (t) | A | B | H | W (mm) | AREA OF WATERWAY $m^2$ | CONCRETE $m^3$ mm | REINF. STEEL kg. | W (mm) | AREA OF WATERWAY $m^2$ | CONCRETE $m^3$ mm | REINF. STEEL kg. | W (mm) | AREA OF WATERWAY $m^2$ | CONCRETE $m^3$ mm | REINF. STEEL kg. |
| 460 | 51 | 310 | 350 | 1070 | 1500 | 0.15 | 0.46 | 3.48 | 2600 | 0.33 | 0.63 | 4.90 | 3400 | 0.45 | 0.80 | 5.97 |
| 610 | 64 | 410 | 430 | 1320 | 2400 | 0.29 | 0.87 | 4.55 | 3500 | 0.58 | 1.20 | 6.50 | 4600 | 0.87 | 1.51 | 8.45 |
| 910 | 86 | 610 | 600 | 1820 | 3800 | 0.65 | 2.28 | 6.68 | 5200 | 1.30 | 3.16 | 9.52 | 6800 | 1.95 | 3.85 | 12.36 |
| 1070 | 95 | 710 | 780 | 2080 | 4300 | 0.90 | 3.84 | 7.57 | 6050 | 1.80 | 5.09 | 10.67 | 7900 | 2.70 | 6.43 | 13.96 |
| 1220 | 108 | 810 | 870 | 2330 | 4800 | 1.17 | 4.43 | 8.81 | 6900 | 2.34 | 6.70 | 12.54 | 9000 | 3.51 | 7.97 | 16.14 |
| 1520 | 127 | 1010 | 980 | 2830 | 5000 | 1.81 | 8.80 | 10.94 | 8600 | 3.63 | 11.93 | 15.56 | 11200 | 5.43 | 15.05 | 19.82 |

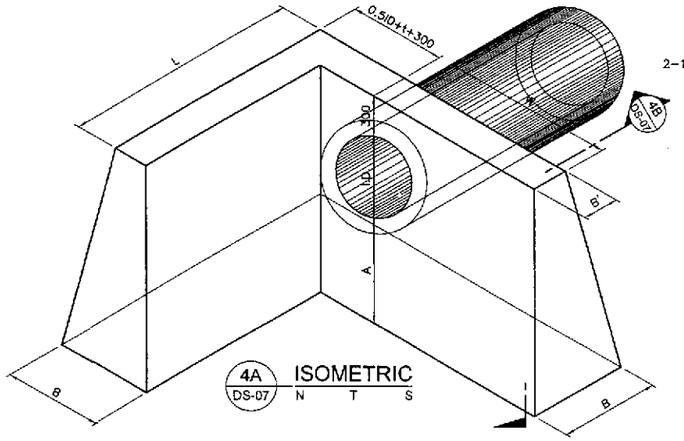


4A DS-07 ISOMETRIC N T S

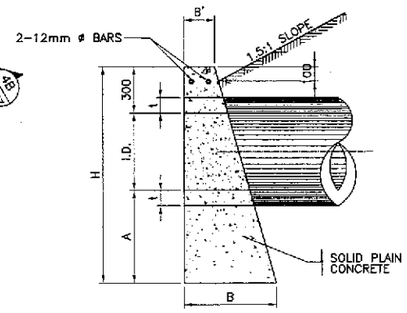


4B DS-07 SECTION NOT TO SCALE

4 DS-07 L-TYPE HEADWALL NOT AS SHOWN

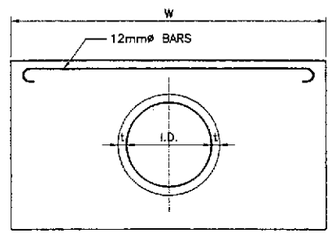


5A DS-07 SINGLE PIPE NOT TO SCALE

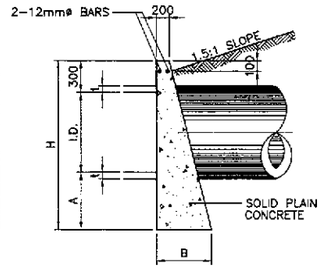


5B DS-07 SECTION NOT TO SCALE

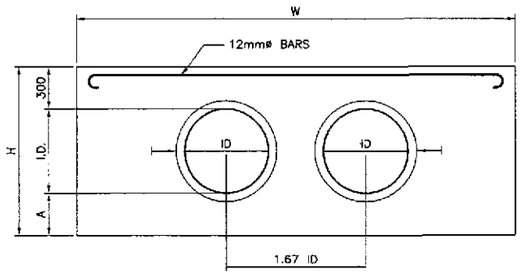


5C DS-07 DOUBLE PIPE NOT TO SCALE 1-2/3 I.D.

5 DS-07 STRAIGHT TYPE HEADWALL NOT AS SHOWN

# STANDARD REINFORCED CONCRETE HEADWALL FOR RCPC

JICA JAPAN INTERNATIONAL COOPERATION AGENCY

KEI KATAHIRA & ENGINEERS INTERNATIONAL — YEC YACHIYO ENGINEERING CO., LTD.

| | DATE | SIGNATURE |
|---|---|---|
| DESIGNED | 10/5/02 | P. STA. MARIA |
| CHECKED | 10/15/02 | H. TARIMA |
| SUBMITTED | 10/16/02 | M. KITADAI TEAM LEADER |

REPUBLIC OF THE PHILIPPINES
DEPARTMENT OF PUBLIC WORKS AND HIGHWAYS

| PJHL – PMO | BUREAU OF DESIGN | | OFFICE OF THE SECRETARY | |
|---|---|---|---|---|
| Submitted By: | Reviewed By: | Recommended By: | Recommended By: (See cover sheet for Signature) | Approved By: (See cover sheet for Signature/Approval) |
| DANILO C. TRAJANO Project Director | JOSEFINA M. ALAGAR Chief, Highways Division | GILBERTO S. REYES OIC, Director IV | MANUEL M. BONDAN Undersecretary | SIMEON A. DATUMANONG Secretary |

PROJECT AND LOCATION : THE DETAILED DESIGN STUDY ON UPGRADING INTER-URBAN HIGHWAY SYSTEM ALONG THE PAN-PHILIPPINE HIGHWAY (Plaridel, Cabanatuan and San Jose Bypasses)

CABANATUAN BYPASS - CONTRACT PACKAGE I

SCALE : NOT TO SCALE — FULL SIZE A1

SHEET CONTENTS : STANDARD REINFORCED CONCRETE HEADWALL FOR RCPC

SHEET NO. : DS-07

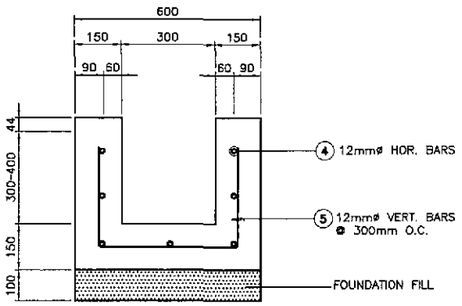


REINFORCED CONCRETE DITCH

1 / D-08 TYPE BU
SCALE: 1:10

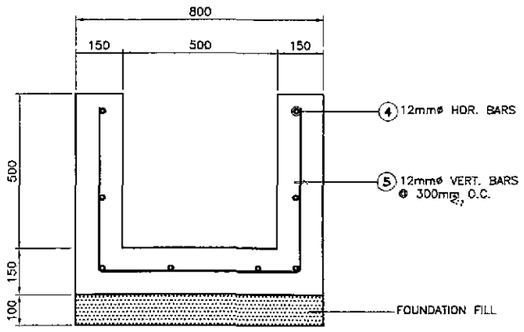


REINFORCED CONCRETE DITCH

2 / D-08 TYPE U
SCALE: 1:10

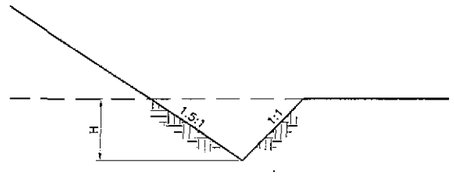


V-SHAPED UNLINED DITCH

TYPE E-4

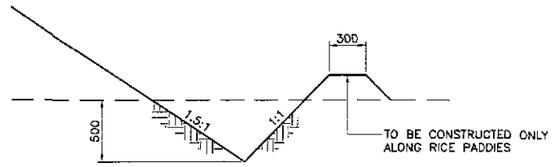


V-SHAPED UNLINED DITCH

TYPE E-3

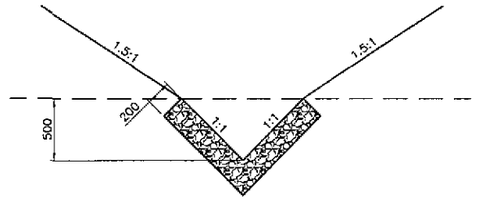


V-SHAPED LINED DITCH
(OUTER SEPARATOR DITCH)

TYPE E-2a

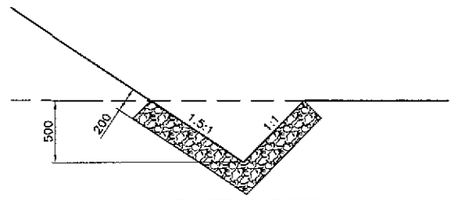


V-SHAPED LINED DITCH

TYPE E-2

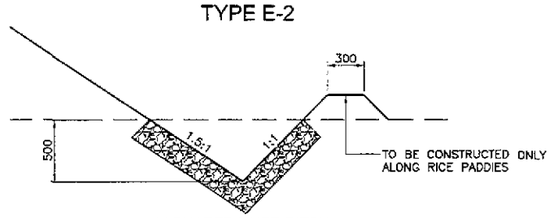


V-SHAPED LINED DITCH

TYPE E-1

3 / D-08 TYPE E
SCALE: 1:25

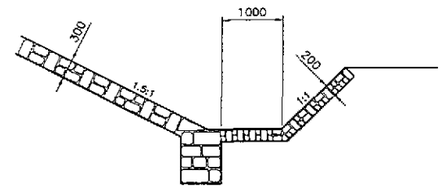


TYPE C-4

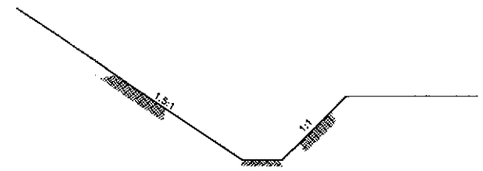


TYPE C-8

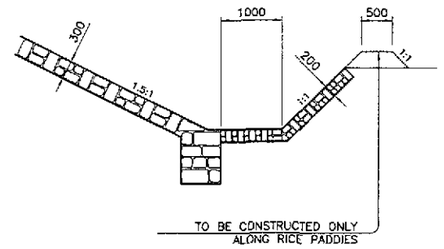


TYPE C-3

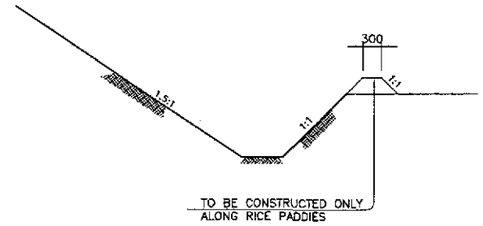


TYPE C-7

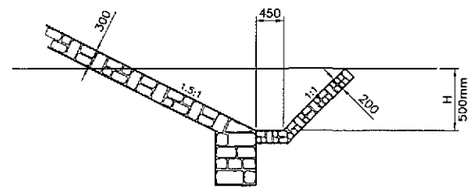


TYPE C-2

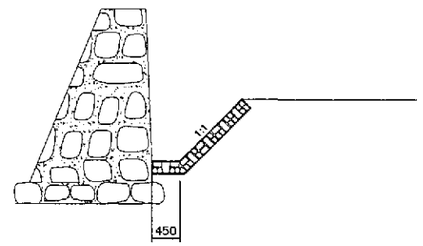


TYPE C-6

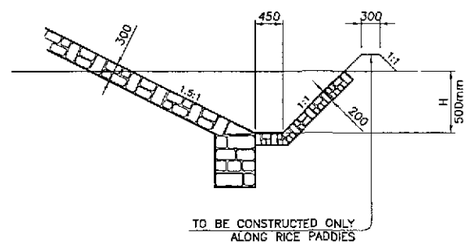


TYPE C-1

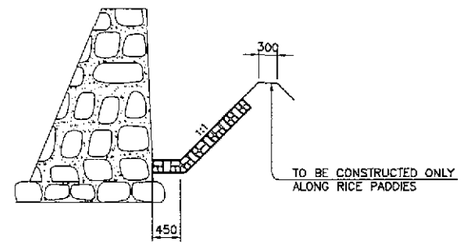


TYPE C-5

4 / D-08 TYPE C
NOT TO SCALE

# STANDARD DRAINAGE DITCHES

JICA
JAPAN INTERNATIONAL COOPERATION AGENCY
KATAHIRA & ENGINEERS INTERNATIONAL
YACHIYO ENGINEERING CO., LTD.

| | DATE | SIGNATURE |
|---|---|---|
| DESIGNED | 10/15/02 | |
| CHECKED | 10/15/02 | |
| SUBMITTED | 10/16/02 | TEAM LEADER |

REPUBLIC OF THE PHILIPPINES
DEPARTMENT OF PUBLIC WORKS AND HIGHWAYS

| PJHL – PMO | BUREAU OF DESIGN | | OFFICE OF THE SECRETARY | |
|---|---|---|---|---|
| Submitted By: | Reviewed By: | Recommended By: | Recommended By: (See cover sheet for Signature) | Approved By: (See cover sheet for Signature/Approval) |
| DANILO C. TRAJANO | JOSEFINA M. ALAGAR | GILBERTO S. REYES | MANUEL M. BONOAN | SIMEON A. DATUMANONG |
| Project Director | Chief, Highways Division | OIC, Director IV | Undersecretary | Secretary |

| PROJECT AND LOCATION : | SCALE : | SHEET CONTENTS : | SHEET NO. : |
|---|---|---|---|
| THE DETAILED DESIGN STUDY ON UPGRADING INTER-URBAN HIGHWAY SYSTEM ALONG THE PAN-PHILIPPINE HIGHWAY (Plaridel, Cabanatuan and San Jose Bypasses) | NOT TO SCALE | STANDARD DRAINAGE DITCHES | DS-08 |
| CABANATUAN BYPASS - CONTRACT PACKAGE I | FULL SIZE A1 | | |

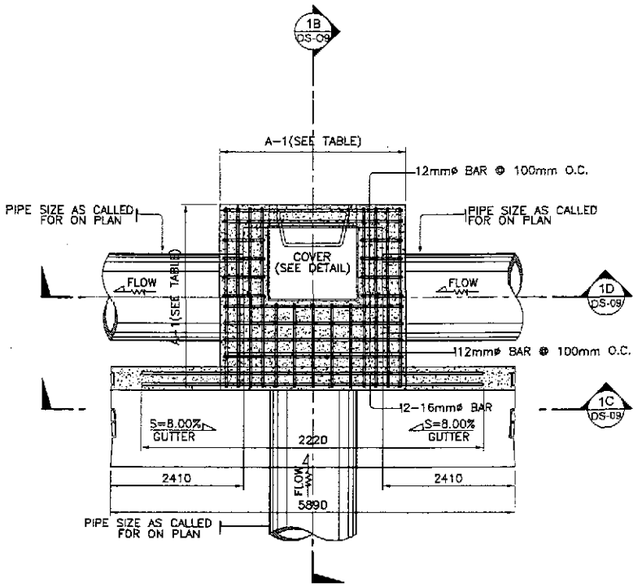


1A DS-09 PLAN

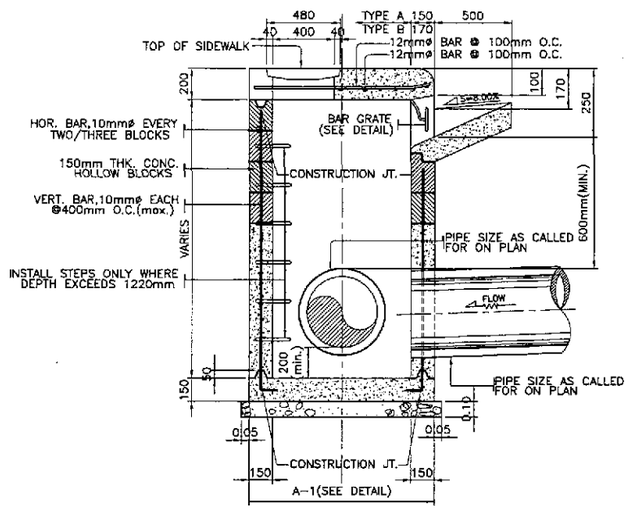


1B DS-09 SECTION

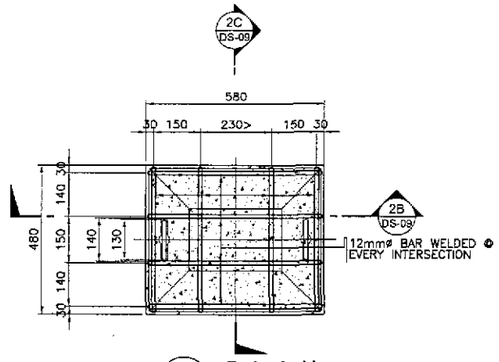


2A DS-09 PLAN

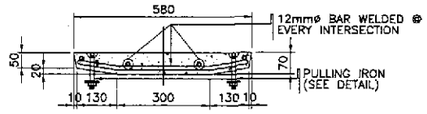


2B DS-09 SECTION

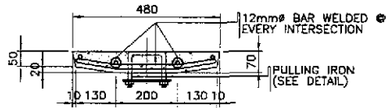


2C DS-09 SECTION

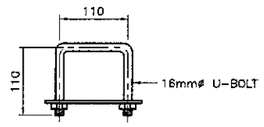


3A DS-09 PLAN

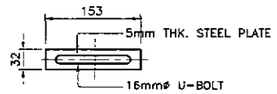


3B DS-09 ELEVATION

3 DS-09 PULLING IRON DETAIL
SCALE 1:5

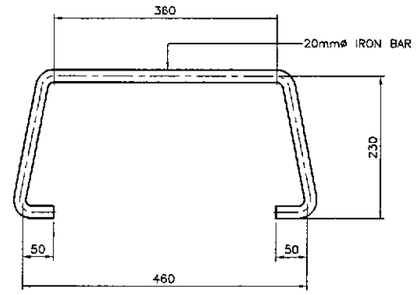


4 DS-09 STEP
SCALE 1:5

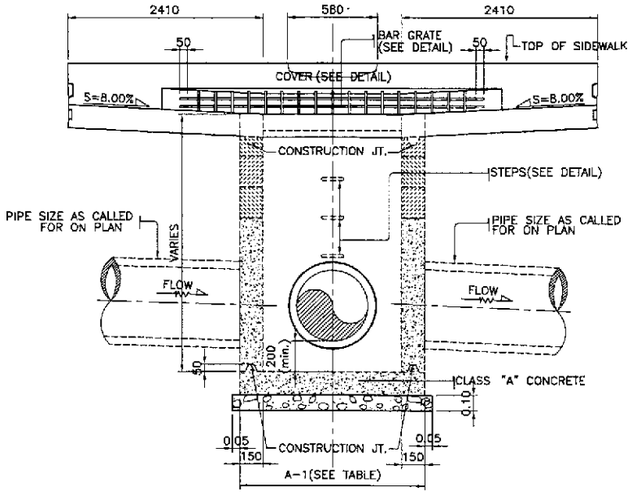


1C DS-09 SECTION
1:20

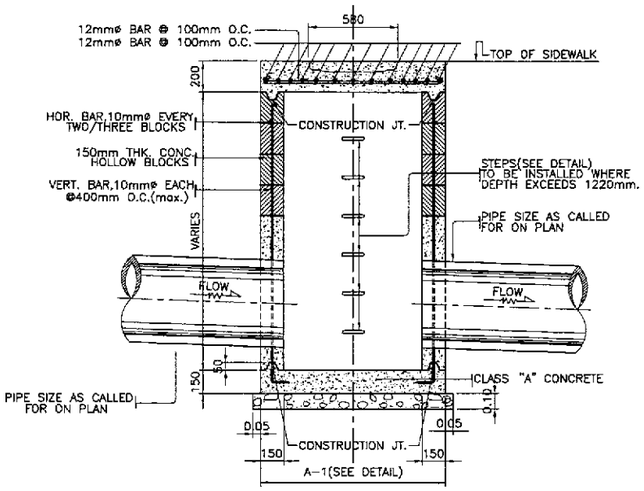


1D DS-09 SECTION

1 DS-09 CURB INLET MANHOLE
SCALE 1:20

2 DS-09 CONCRETE COVER DETAIL
SCALE 1:10

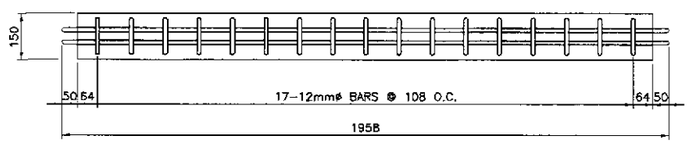


5 DS-09 DETAIL OF BAR GRATE FOR OPENING OF CURB INLET
SCALE 1:20

| TABLE OF DIMENSION | | |
|---|---|---|
| TYPE OF CIM | SIZE OF PIPE (mm) | A-1 |
| T-1 | 300 | 1.12 M. |
| T-2 | 460 | 1.19 M. |
| T-3 | 610 | 1.37 M. |
| T-4 | 760 | 1.54 M. |
| T-5 | 910 | 1.73 M. |
| T-6 | 1070 | 1.90 M. |
| T-7 | 1220 | 2.08 M. |
| T-8 | 1520 | 2.43 M. |

NOTES:

1. ALL CONCRETE SHALL BE CLASS "A". EXPOSED EDGES SHALL BE FINISHED WITH SUITABLE EDGER.
2. PULLING IRON, STEPS AND BAR GRATE SHALL BE PAINTED WITH ONE COAT OF ZINC CHROMATE.
3. CONSTRUCTION JOINTS SHALL CONFORM WITH THE GROOVES OF CONCRETE HOLLOW BLOCKS.
4. CONCRETE HOLLOW BLOCKS OR DRESSED ADOBE BLOCKS SHALL HAVE AN AVERAGE COMPRESSIVE STRENGTH OF 6.865MPa.
5. IN CONCRETE HOLLOW BLOCKS STRUCTURE, ALL HOLES SHALL BE FILLED WITH CEMENT MORTAR.
6. WHERE CONCRETE HOLLOW BLOCKS STRUCTURES ATTAIN A HEIGHT OF 1.20 METER, IT SHALL BE REINFORCED STEEL BARS SPACE AT NOT MORE THAN 0.60 M. O.C. BOTHWAYS.
7. INSTALL STEPS ONLY WHERE DEPTH EXCEEDS 1.22 METERS.

# DETAILS OF COMBINATION CURB INLET MANHOLE

JICA JAPAN INTERNATIONAL COOPERATION AGENCY

KEI KATAHIRA & ENGINEERS INTERNATIONAL

YEC YACHIYO ENGINEERING CO., LTD.

| | DATE | SIGNATURE |
|---|---|---|
| DESIGNED | 10/15/02 | T. STA. MARIA |
| CHECKED | 10/15/02 | H. SEKI |
| SUBMITTED | 10/16/02 | M. KUCHI |

TEAM LEADER

REPUBLIC OF THE PHILIPPINES
DEPARTMENT OF PUBLIC WORKS AND HIGHWAYS

| PJHL – PMO | BUREAU OF DESIGN | | OFFICE OF THE SECRETARY | |
|---|---|---|---|---|
| Submitted By: | Reviewed By: | Recommended By: | Recommended By: (See cover sheet for Signature) | Approved by: (See cover sheet for Signature/Approval) |
| DANILO C. TRAJANO | JOSEFINA M. ALAGAR | GILBERTO S. REYES | MANUEL M. BONDAN | SIMEON A. DATUMANONG |
| Project Director | Chief, Highways Division | OIC, Director IV | Undersecretary | Secretary |

PROJECT AND LOCATION :
THE DETAILED DESIGN STUDY ON UPGRADING INTER-URBAN HIGHWAY SYSTEM ALONG THE PAN-PHILIPPINE HIGHWAY (Plaridel, Cabanatuan and San Jose Bypasses)
CABANATUAN BYPASS - CONTRACT PACKAGE I

SCALE : AS SHOWN FULL SIZE A1

SHEET CONTENTS : STANDARD COMBINATION CURB INLET MANHOLE

SHEET NO. : DS-09

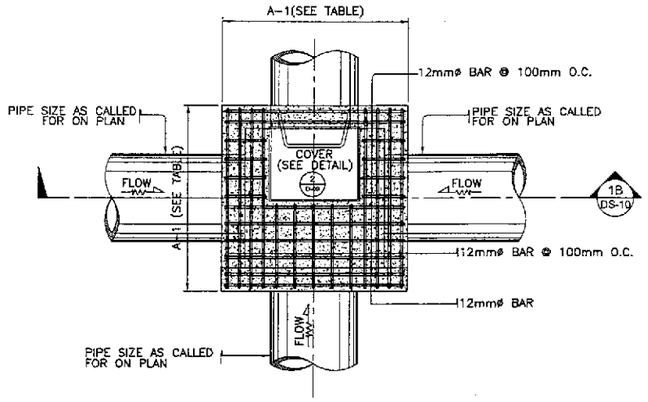


1A DS-10 PLAN BOX-TYPE MANHOLE (SINGLE PIPE)

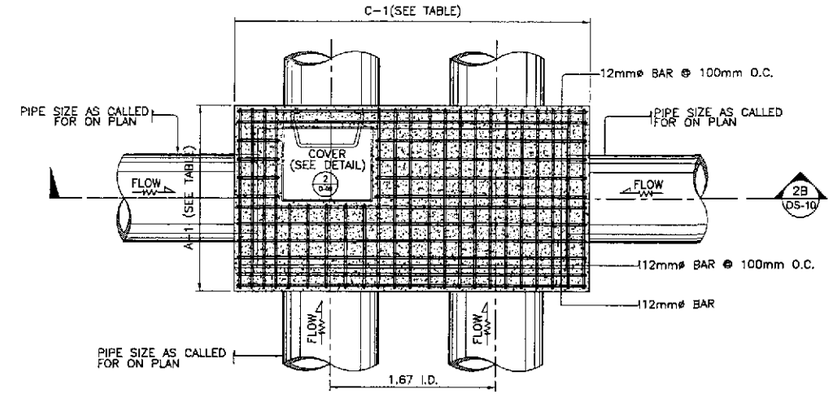


2A DS-10 PLAN BOX-TYPE MANHOLE (DOUBLE PIPE)

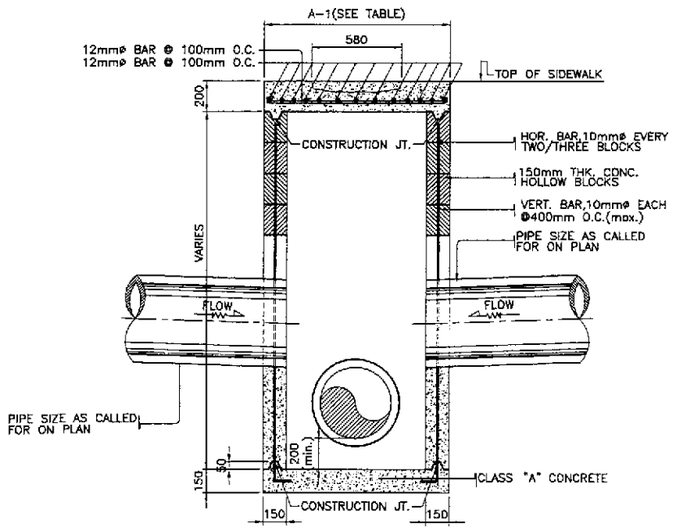


1B DS-10 SECTION

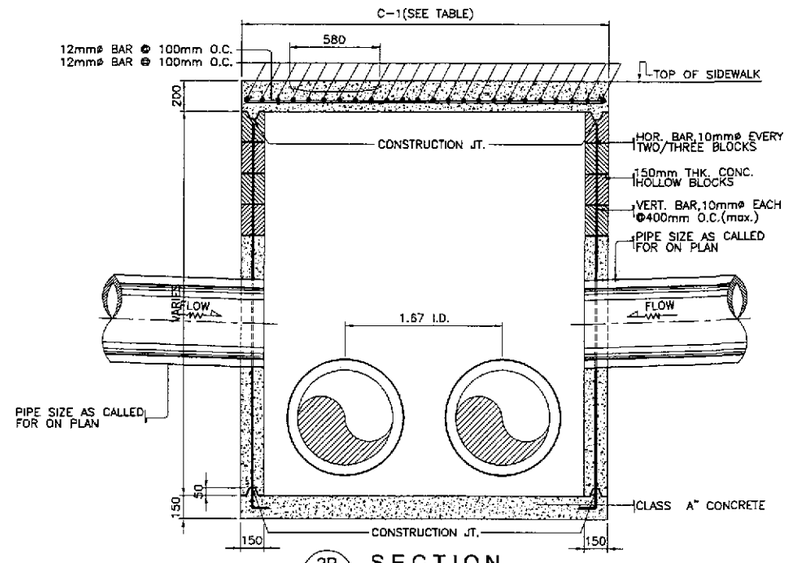


2B DS-10 SECTION

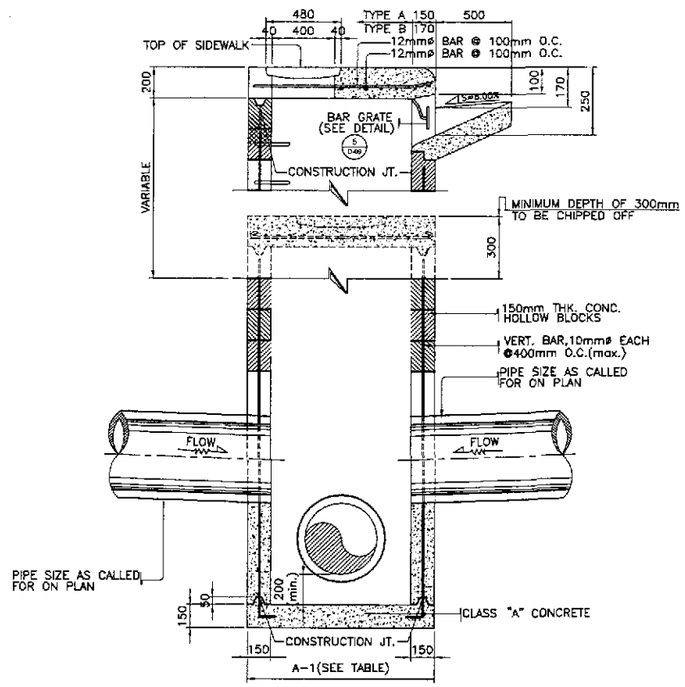


3 DS-10 BOX-TYPE CONVERTED TO CURB INLET MANHOLE

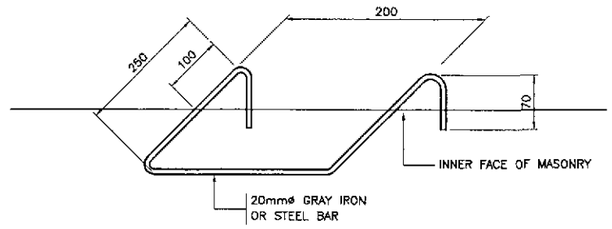


4 DS-10 STD. STEP OR RUNG

| TABLE OF MANHOLE | | | | | |
|---|---|---|---|---|---|
| (H) HEIGHT mm. | (T) THICKNESS OF WALL (mm) | VERTICAL BARS | | | HORIZONTAL BARS |
| | | INSIDE EDGE | CENTER | OUTSIDE EDGE | |
| 1000 | 150mm CHB | – | 10mmø @ 200 | – | 10mmø @ 400 |
| 2000 | 150mm CHB | – | 12mmø @ 200 | – | 10mmø @ 400 |
| 3000 | 180mm CONC. | 20mmø @ 300 | – | 32mmø @ 300 | 10mmø @ 400 |
| 4000 | 230mm CONC. | 20mmø @ 250 | – | 32mmø @ 250 | 10mmø @ 400 |
| 5000 | 280mm CONC. | 20mmø @ 225 | – | 32mmø @ 225 | 10mmø @ 400 |
| 6000 | 330mm CONC. | 20mmø @ 200 | – | 32mmø @ 200 | 10mmø @ 400 |
| 7000 | 380mm CONC. | 20mmø @ 175 | – | 32mmø @ 175 | 10mmø @ 400 |
| 8000 | 410mm CONC. | 20mmø @ 150 | – | 32mmø @ 150 | 10mmø @ 400 |

| TABLE OF DIMENSION | | | |
|---|---|---|---|
| TYPE OF CIM | SIZE OF PIPE (mm) | A-1 (m) | C-1 (m) |
| T-1 | 300 | 1.12 | 1.92 |
| T-2 | 460 | 1.19 | 2.26 |
| T-3 | 610 | 1.37 | 2.69 |
| T-4 | 760 | 1.54 | 3.11 |
| T-5 | 910 | 1.73 | 3.55 |
| T-6 | 1070 | 1.90 | 3.98 |
| T-7 | 1220 | 2.08 | 4.42 |
| T-8 | 1520 | 2.43 | 5.27 |

NOTES:

1. ALL CONCRETE SHALL BE CLASS "A". EXPOSED EDGES SHALL BE FINISHED WITH SUITABLE EDGER.
2. PULLING IRON, STEPS AND BAR GRATE SHALL BE PAINTED WITH ONE COAT OF ZINC CHROMATE.
3. CONSTRUCTION JOINTS SHALL CONFORM WITH THE GROOVES OF CONCRETE HOLLOW BLOCKS.
4. CONCRETE HOLLOW BLOCKS OR DRESSED ADOBE BLOCKS SHALL HAVE AN AVERAGE COMPRESSIVE STRENGTH OF 6.865MPa.
5. IN CONCRETE HOLLOW BLOCKS STRUCTURE, ALL HOLES SHALL BE FILLED WITH CEMENT MORTAR.
6. WHERE CONCRETE HOLLOW BLOCKS STRUCTURES ATTAIN A HEIGHT OF 1.20 METER, IT SHALL BE REINFORCED STEEL BARS SPACE AT NOT MORE THAN 0.60 M. O.C. BOTHWAYS.
7. INSTALL STEPS ONLY WHERE DEPTH EXCEEDS 1.22 METERS.
8. 150 mm BOTTOM SLAB THICKNESS FOR HEIGHT OF 1000 TO 4000mm. AND 200mm. FOR 5000 TO 8000mm IN HIEGHT.
9. FROM THE HEIGHT OF 3000 TO 8000mm. THE FIRST 2000mm. FROM THE TOP IS CHB WITH DETAILS FOR 2000mm HEIGHT.
10. REINFORCEMENT FOR BOTTOM SLAB ARE ALL 10mmø @ 400 B.W.
11. VERTICAL BARS ARE CUT AT HALF POINT FOR EVERY OTHER BAR AT SOLID WALL.
12. INSIDE SURFACES AND OUTSIDE SURFACES OF ALL MASONRY SHALL HAVE A PLASTER COAT 1/2" THICK.
13. BOX TYPE MANHOLE SHAL NOT BE CONSTRUCTED WITHIN THE RIDING SURFACE.

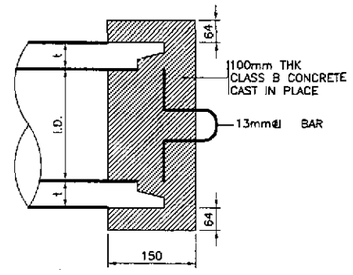


5 DS-10 CONCRETE BLOCK PLUG @ SUBSURFACE PIPE

# SPECIAL JUNCTION BOX MANHOLE

JICA
JAPAN INTERNATIONAL COOPERATION AGENCY
KEI KATAHIRA & ENGINEERS INTERNATIONAL
YEO YACHIYO ENGINEERING CO., LTD.

| | DATE | SIGNATURE |
|---|---|---|
| DESIGNED | 10/15/02 | F. DE LA MARIA |
| CHECKED | 10/15/02 | S. JOSE |
| SUBMITTED | 10/16/02 | M. KIKUCHI TEAM LEADER |

REPUBLIC OF THE PHILIPPINES
DEPARTMENT OF PUBLIC WORKS AND HIGHWAYS

| PJHL – PMO | BUREAU OF DESIGN | | OFFICE OF THE SECRETARY | |
|---|---|---|---|---|
| Submitted By: | Reviewed By: | Recommended By: | Recommended By: (See cover sheet for Signature) | Approved By: (See cover sheet for Signature/Approval) |
| DANILO C. TRAJANO | JOSEFINA M. ALAGAR | GILBERTO S. REYES | MANUEL M. BONDAN | SIMEON A. DATUMANONG |
| Project Director | Chief, Highways Division | OIC, Director IV | Undersecretary | Secretary |

| PROJECT AND LOCATION : | SCALE : | SHEET CONTENTS : | SHEET NO. : |
|---|---|---|---|
| THE DETAILED DESIGN STUDY ON UPGRADING INTER-URBAN HIGHWAY SYSTEM ALONG THE PAN-PHILIPPINE HIGHWAY (Plaridel, Cabanatuan and San Jose Bypasses) | AS SHOWN | SPECIAL JUNCTION BOX MANHOLE | DS-10 |
| CABANATUAN BYPASS - CONTRACT PACKAGE I | FULL SIZE A1 | | |

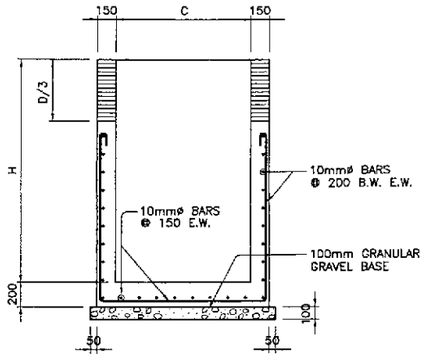


1C DS-11 SECTION

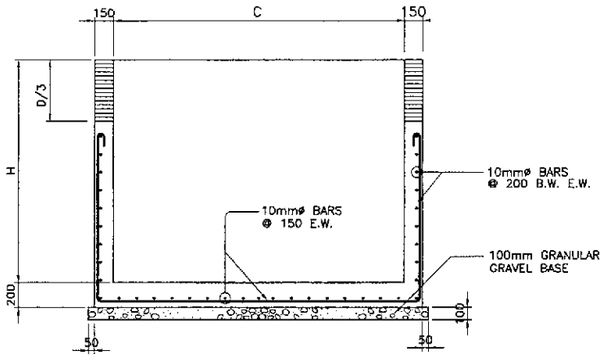


2C DS-11 SECTION

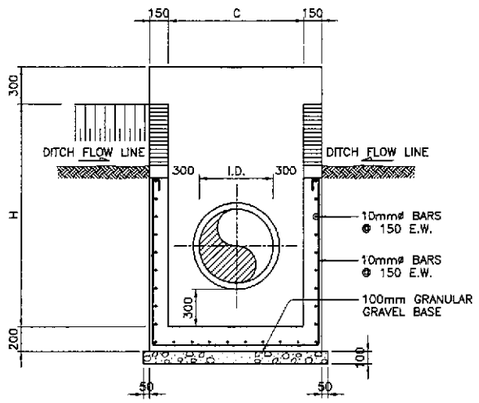


1B DS-11 SECTION

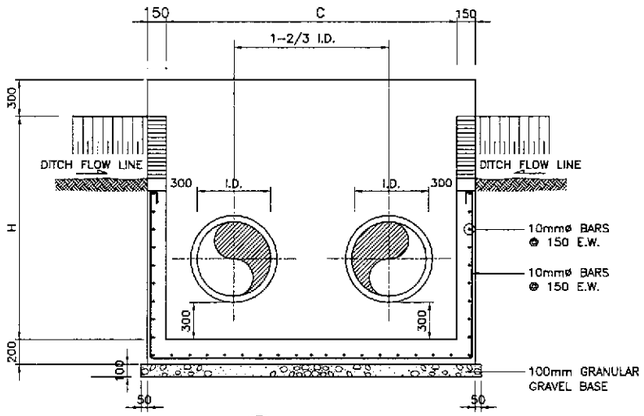


2B DS-11 SECTION

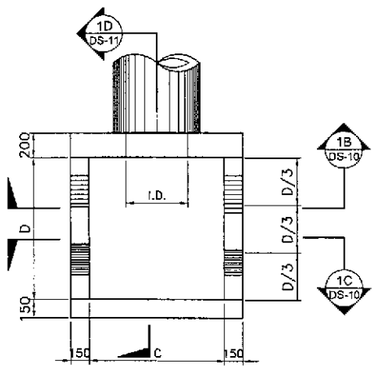


1A DS-11 PLAN

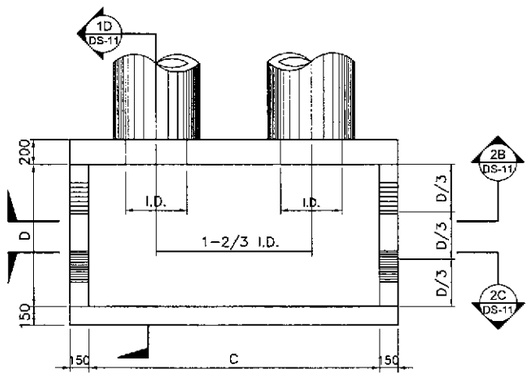


2A DS-11 PLAN

1 DS-11 CONCRETE CATCH BASIN (SINGLE PIPE)
SCALE 1:25

2 DS-11 CONCRETE CATCH BASIN (DOUBLE PIPE)
SCALE 1:25

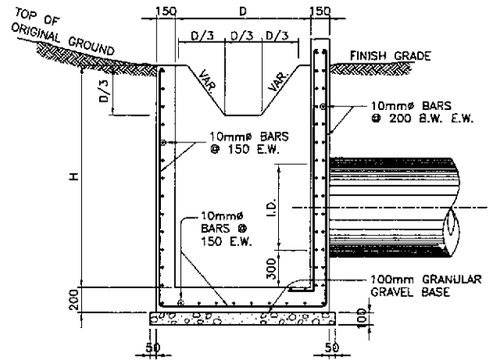


1C DS-11 SECTION

REINFORCED CONCRETE CATCH BASIN DIMENSION FOR RCPC

| PIPE DIAMETER (mm) | | 610 | 910 | 1070 | 1220 | 1520 |
|---|---|---|---|---|---|---|
| COMMON TO ALL NUMBER OF BARRELS | H | 1.910 | 2.210 | 2.370 | 2.520 | 2.820 |
| | D | 1.200 | 1.500 | 1.650 | 1.800 | 2.100 |
| SINGLE | C | 1.210 | 1.510 | 1.670 | 1.820 | 2.120 |
| DOUBLE | C | 2.230 | 3.030 | 3.460 | 3.860 | 4.660 |
| TRIPLE | C | 3.250 | 4.550 | 5.240 | 5.890 | 7.120 |

# DETAILS OF REINFORCED CONCRETE CATCH BASIN FOR RCPC

JICA
JAPAN INTERNATIONAL COOPERATION AGENCY
KATAHIRA & ENGINEERS INTERNATIONAL
YACHIYO ENGINEERING CO., LTD.

| | DATE | SIGNATURE |
|---|---|---|
| DESIGNED | 10/15/02 | M. SANTA MARIA |
| CHECKED | 10/15/02 | H. SAKIN |
| SUBMITTED | 10/16/02 | M. ENRICH TEAM LEADER |

REPUBLIC OF THE PHILIPPINES
DEPARTMENT OF PUBLIC WORKS AND HIGHWAYS

| PJHL – PMO | BUREAU OF DESIGN | | OFFICE OF THE SECRETARY | |
|---|---|---|---|---|
| Submitted By: | Reviewed By: | Recommended By: | Recommended By: (See cover sheet for Signature) | Approved By: (See cover sheet for Signature/Approval) |
| DANILO C. TRAJANO | JOSEFINA M. ALAGAR | GILBERTO S. REYES | MANUEL M. BONDAN | SIMEON A. DATUMANONG |
| Project Director | Chief, Highways Division | OIC, Director IV | Undersecretary | Secretary |

PROJECT AND LOCATION :
THE DETAILED DESIGN STUDY ON UPGRADING INTER-URBAN HIGHWAY SYSTEM ALONG THE PAN-PHILIPPINE HIGHWAY (Plaridel, Cabanatuan and San Jose Bypasses)
CABANATUAN BYPASS - CONTRACT PACKAGE I

SCALE : 1:25 FULL SIZE A1

SHEET CONTENTS : STANDARD REINFORCED CONCRETE CATCH BASIN FOR RCPC

SHEET NO. : DS-11

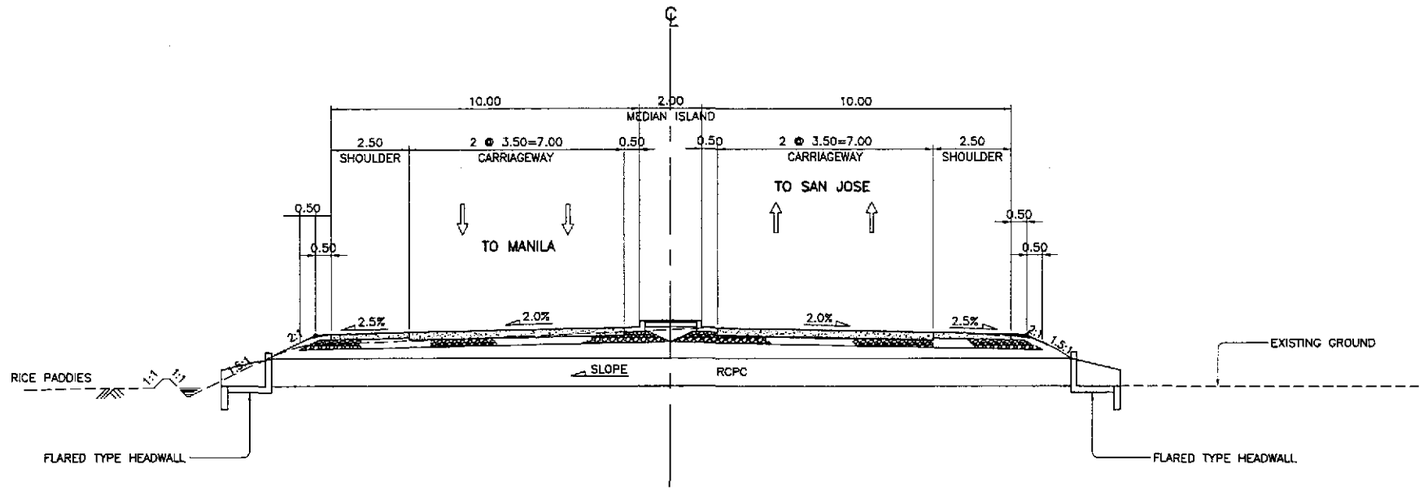


2 / DS-12 TYPICAL DRAINAGE SECTION ( ULTIMATE STAGE )

SCALE 1:100

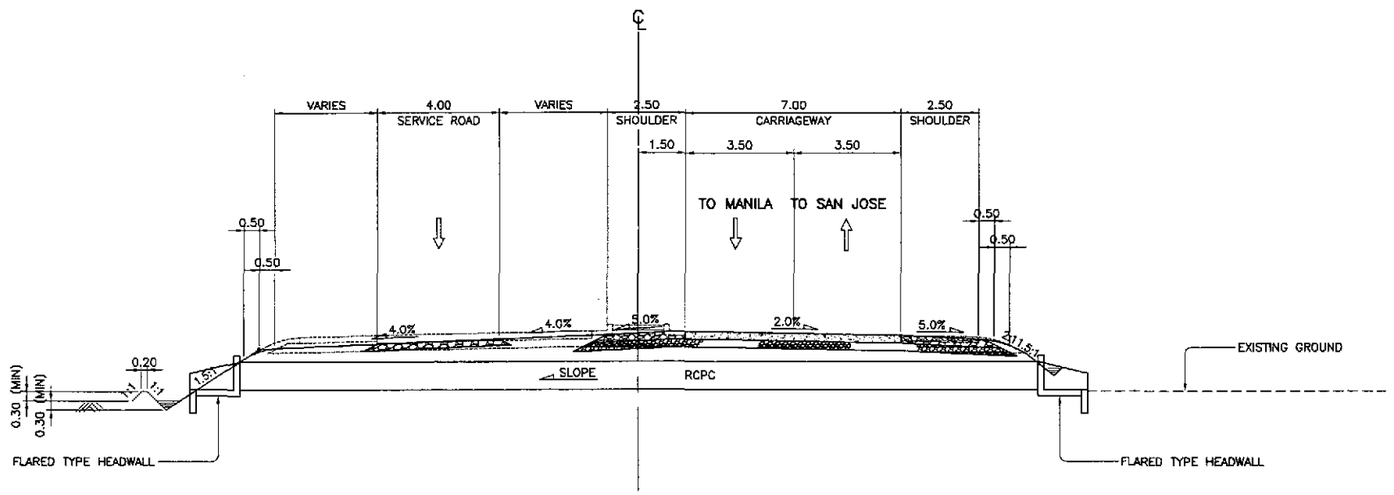


1 / DS-12 TYPICAL DRAINAGE SECTION ( INITIAL STAGE )

SCALE 1:100

JICA
JAPAN INTERNATIONAL COOPERATION AGENCY

KEI KATAHIRA & ENGINEERS INTERNATIONAL
YEC YACHIYO ENGINEERING CO., LTD.

| | DATE | SIGNATURE |
|---|---|---|
| DESIGNED | 10/5/07 | CEFA MARGA |
| CHECKED | 10/5/07 | H. KURAMOTO |
| SUBMITTED | 10/6/07 | H. KURAMOTO |
| | | TEAM LEADER |

REPUBLIC OF THE PHILIPPINES
DEPARTMENT OF PUBLIC WORKS AND HIGHWAYS

| PJHL – PMO | BUREAU OF DESIGN | | OFFICE OF THE SECRETARY | |
|---|---|---|---|---|
| Submitted By: | Reviewed By: | Recommended By: | Recommended By: (See cover sheet for Signature) | Approved By: (See cover sheet for Signature/Approval) |
| DANILO C. TRAJANO | JOSEFINA M. ALAGAR | GILBERTO S. REYES | MANUEL M. BONDAN | SIMEON A. DATUMANONG |
| Project Director | Chief, Highways Division | OIC, Director IV | Undersecretary | Secretary |

PROJECT AND LOCATION :
THE DETAILED DESIGN STUDY ON UPGRADING INTER-URBAN HIGHWAY SYSTEM ALONG THE PAN-PHILIPPINE HICHWAY (Plaridel, Cabanatuan and San Jose Bypasses)
CABANATUAN BYPASS - CONTRACT PACKAGE I

SCALE : NOT TO SCALE
FULL SIZE A1

SHEET CONTENTS : TYPICAL DRAINAGE SECTIONS ( INITIAL and ULTIMATE STAGE )

SHEET NO. : DS-12

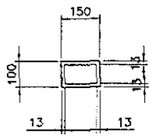


PLAN (POST)

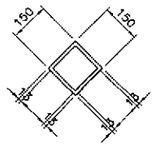


PLAN (POST)

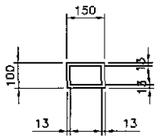


PLAN (POST)

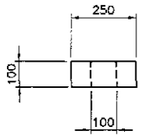


PLAN (POST)

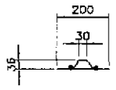


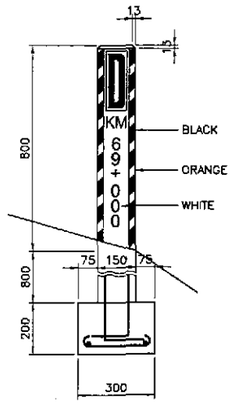


ELEVATION
CONCRETE MARKER
TYPE I-a

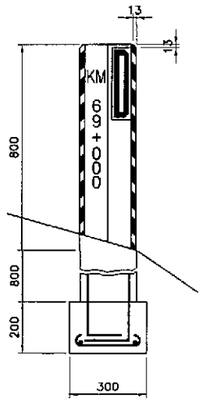


ELEVATION
CONCRETE MARKER
TYPE I-b

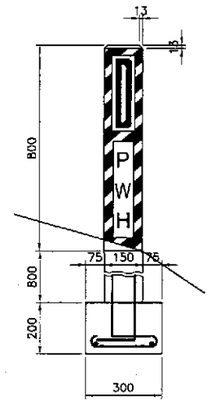


ELEVATION
CONCRETE MARKER
TYPE I-c

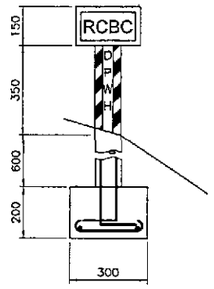


ELEVATION
CONCRETE MARKER
TYPE I-d

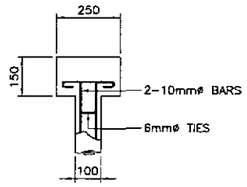


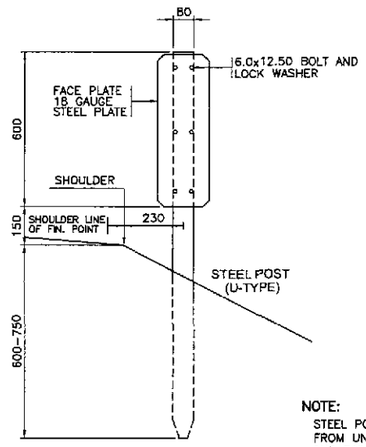


ISOMETRIC VIEW

NOTE:
STEEL POST MAY BE CHANNEL TAKEN FROM UNUSED BAILEY PANNELS MARKINGS AND PAINTINGS SAME AS FOR TYPE I AND TYPE II AS SHOWN.

ELEVATION
STEEL MARKER
TYPE II

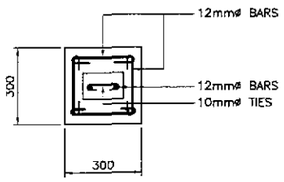


TYPICAL FOOTING DETAIL
CONCRETE MARKER
(TYPE I-a,b,c,d)

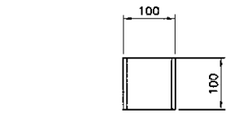


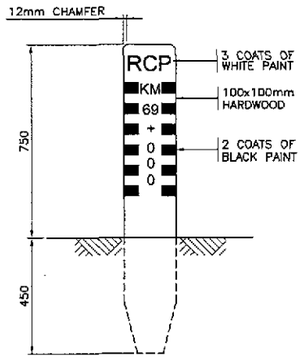


ELEVATION
WOODEN MARKER
TYPE III-a

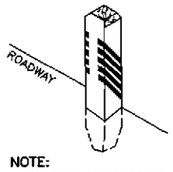


NOTE:
FACING ROADWAY STAKED AT CENTER LINE OF DRAINAGE 254mm AWAY FROM SHOULDER LINE OF FINAL POINT.

ISOMETRIC VIEW

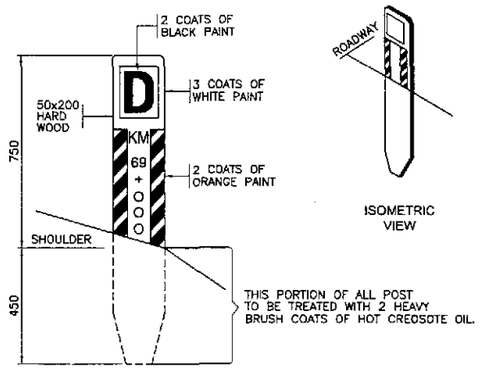


ELEVATION
WOODEN MARKER
TYPE III-b




ISOMETRIC VIEW

## GENERAL NOTES

**CONCRETE:**
ALL CONCRETE TO BE CLASS "A" AND EXPOSED TOP TO BE CHAMFERED 13.0mm. ALL CONCRETE SHALL PDURED IN THE DRY.

**REINFORCING STEEL:**
UNLESS OTHERWISE SHOWN ALL BAR SPACINGS ARE TO THE CENTER OF BARS AND THE MINIMUM COVERING OF BARS MEASURED FROM THE SURFACE OF THE CONCRETE TO THE FACE OF ANY BARS SHALL BE 50.0mm.

**MARKINGS:**
ALL RECESSED LETTERS SHALL BE CAST INTO CONCRETE AND ALL NUMBERS SHALL BE PAINTED AS SHOWN USING LETTER AND NUMBER FORM.

**PAINTINGS:**
ALL CONCRETE POSTS, TWO COATS OF WHITE PAINT. ALL RECESSED LETTERS ONE (1) COAT OF BLACK PAINT AND ALL BACKGOUND STRIPE SHALL BE ONE (1) COAT OF BLACK/ORANGE GLOSSED PAINT. ALL STRUCTURAL PLATES TWO COATS WHITE SHARP PAINT.

**LOCATION:**
DRAINAGE CULVERT MARKER TO BE SET AT SHOULDER LINE AND AT CENTER LINE OF CULVERT FACING TRAFFIC/ROADWAY AS SHOWN AND AS STAKED BY ENGINEERS.

**DIMENSION:**
ALL DIMENSIONS ARE IN MILLIMETERS UNLESS OTHERWISE STATED.

A / DS-13 — STANDARD MAINTENANCE MARKERS
NOT TO SCALE

JICA
JAPAN INTERNATIONAL COOPERATION AGENCY
KATAHIRA & ENGINEERS INTERNATIONAL
YACHIYO ENGINEERING CO., LTD.

| | DATE | SIGNATURE |
|---|---|---|
| DESIGNED | 10/5/02 | F. STA. MARIA |
| CHECKED | 10/16/02 | |
| SUBMITTED | 10/16/02 | TEAM LEADER |

REPUBLIC OF THE PHILIPPINES
DEPARTMENT OF PUBLIC WORKS AND HIGHWAYS

| PJHL – PMO | BUREAU OF DESIGN | | OFFICE OF THE SECRETARY | |
|---|---|---|---|---|
| Submitted By: | Reviewed By: | Recommended By: | Recommended By: (See cover sheet for Signature) | Approved By: (See cover sheet for Signature/Approval) |
| DANILO C. TRAJANO | JOSEFINA M. ALAGAR | GILBERTO S. REYES | MANUEL M. BONDAN | SIMEON A. DATUMANONG |
| Project Director | Chief, Highways Division | OIC, Director IV | Undersecretary | Secretary |

PROJECT AND LOCATION :
THE DETAILED DESIGN STUDY ON UPGRADING INTER-URBAN HIGHWAY SYSTEM ALONG THE PAN-PHILIPPINE HIGHWAY (Plaridel, Cabanatuan and San Jose Bypasses)
CABANATUAN BYPASS - CONTRACT PACKAGE I

SCALE : NOT TO SCALE — FULL SIZE A1

SHEET CONTENTS : STANDARD MAINTENANCE MARKERS

SHEET NO. : DS-13