ELECTRICAL

LEGEND AND SYMBOLS:

- STREET LIGHTING POLE WITH 1 x 250 WATTS, 240 VOLTS HIGH PRESSURE SODIUM LUMINAIRE SINGLE BRACKET / SINGLE ARM, LOCATED AT 180° ON CENTER IES TYPE III MEDIUM SEMI CUT-OFF, SIMILAR TO GE M250A2
- -DITTO- DOUBLE ARM LIGHT POLE WITH 2 x 250 WATTS HPS LAMP
- SERVICE ENTRANCE AND METERING PEDESTAL WITH LIGHTING CONTACTOR PANEL AS SHOWN IN THE DRAWINGS.
- CIRCUIT BREAKER, RATING AS SHOWN
- UNDERGROUND CONDUIT WITH CONCRETE ENVELOPE
- UNDERGROUND CONDUIT WITH STEEL REINFORCED CONCRETE ENVELOPE
- (M) KILOWATT HOUR METER, SINGLE-PHASE, 240V, 60 Hz
- CIRCUIT HOMERUN

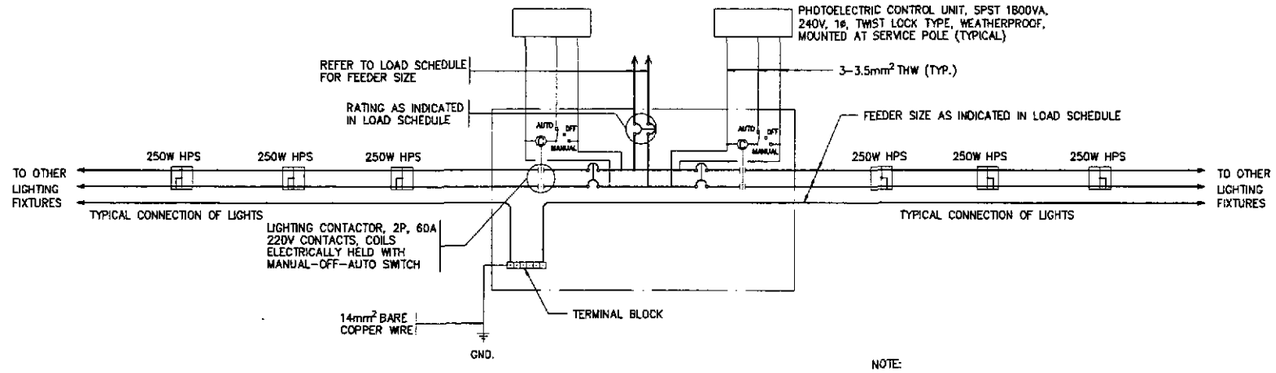

NOTE:
REFER TO LOAD SCHEDULE FOR THE NUMBER AND RATING OF BRANCH CIRCUIT BREAKERS.

2 / ES-01 **SCHEMATIC CONTROL DIAGRAM**
SCALE 1-20

GENERAL NOTES:

1. ALL ELECTRICAL WORKS SHALL BE DONE IN ACCORDANCE WITH THE PROVISIONS OF THE LATEST EDITION OF THE PHILIPPINE ELECTRICAL CODE, THE LAWS AND ORDINANCES OF THE LOCAL CODE, ENFORCING AUTHORITIES AND THE REQUIREMENTS OF THE LOCAL POWER COMPANY. THE ELECTRICAL WORK SHALL BE DONE UNDER THE DIRECT SUPERVISION OF A DULY REGISTERED ELECTRICAL ENGINEER.
2. THE CONTRACTOR SHALL SECURE ALL PERMITS AND PAY ALL FEES REQUIRED FOR THE WORK AND FURNISH THE OWNER, THROUGH THE ENGINEERS FINAL CERTIFICATES OF ELECTRICAL INSPECTION AND APPROVAL FROM PROPER GOVERNMENT AUTHORITIES FOR COMPLETED WORK.
3. THE POWER SERVICE VOLTAGE SHALL BE 240V, 1ø, 2W, 60 Hz. ALL MATERIALS TO BE USED AND EQUIPMENT TO BE INSTALLED SHALL BE BRAND NEW AND MUST BE OF THE APPROVED TYPES FOR THE PARTICULAR LOCATION AND PURPOSE INTENDED.
4. ALL WIRES SHALL BE COPPER, THERMOPLASTIC INSULATED TYPE THW, 600V, UNLESS OTHERWISE INDICATED. BRAND SHALL BE PHELPS DODGE, DURAFLEX OR APPROVED EQUAL.
5. UNLESS OTHERWISE INDICATED, THE MINIMUM SIZE OF CIRCUIT CONDUCTORS FROM STEEL POLE JUNCTION BOX/HANDHOLE TO EACH LUMINAIRE SHALL BE 2-3.5mm² THW & 1-3.5mm² TW(GND) INSIDE STEEL POLE.
6. UNLESS OTHERWISE INDICATED ALL CONDUIT PIPES SHALL BE UNPLASTICIZED POLYVINYL CHLORIDE CONDUIT SCHEDULE 40 OR POLYTHELENE PIPE AS MANUFACTURED BY MOLDEX, NELTEX OR APPROVED EQUAL. THE CONDUIT SIZE INDICATED IS THE INSIDE DIAMETER OF CONDUIT.
7. THE CONTRACTOR SHALL VERIFY AND COORDINATE TO LOCAL UTILITY COMPANY THE ACTUAL LOCATION OF THE SERVICE ENTRANCE FOR CONNECTION TO THE POWER SUPPLY. LIKEWISE, THE CONCRETE PEDESTAL SHALL BE PROVIDED BY THE CONTRACTOR.
8. ALL NON-CURRENT CARRYING PARTS OF EVERY ELECTRICAL EQUIPMENT/FIXTURE SHALL BE GROUNDED EFFECTIVELY.
9. UNDERGROUND CONDUIT RUN SHALL BE BURIED A MINIMUM OF 460mm BELOW GROUND LEVEL. UNLESS OTHERWISE INDICATED, CONDUIT RUN CROSSING STREET SHALL BE ENCASED IN STEEL REINFORCED 2500 PSI CONCRETE WITH MINIMUM OF 75mm (3 INCHES) THICKNESS COVERED ALL AROUND.
10. UNPROTECTED CONDUIT RISERS AND EXPOSED CONDUIT RUNS SHALL BE RIGID STEEL CONDUIT.
11. ALL PANELBOARD ENCLOSURES SHALL BE RAINTIGHT, NEMA 4X ENCLOSURE (1.5mm THICK MINIMUM GAUGE 14 FOR BOX AND COVER) WITH CONCEALED HINGE AND FLUSH LOCK KEY.
12. ALL STREET LUMINAIRE ASSEMBLY INCLUDING POLE AND FOUNDATION SHALL WITHSTAND WINDS UP TO 250 KPH PER HOUR GUSTING WITHOUT PERMANENT DEFORMATION.
13. DO NOT INSTALL POLE WITHOUT COMPLETE INSTALLATION/CONNECTION OF THE LUMINAIRE ASSEMBLY.
14. ALL CIRCUIT BREAKERS SHALL BE UL LISTED AS SWD (SWITCHING DUTY) SUITABLE FOR HIGH INITIAL INRUSH CURRENT FOR SWITCHING THE PRESSURE SODIUM LUMINAIRES. SIEMENS-ITE, SQUARE D, WESTINGHOUSE BRANDS SHALL BE USED OR APPROVED EQUIVALENT.
15. CONCRETE HANDHOLES OR OUTDOOR TYPE PULLBOXES OF CODE 1.61mm (GAGE 16) MINIMUM SHALL BE PROVIDED BY THE CONTRACTOR, WHENEVER NECESSARY, TO FACILITATE WIRE PULLING EVEN IF THESE ITEMS ARE NOT SHOWN IN THE PLANS.

NOTES:

1. UNLESS OTHERWISE SPECIFIED, TOP OF CONCRETE ENVELOPE SHALL NOT BE LESS THAN 460mm BELOW FINISHED GRADE LINE EXCEPT, THAT UNDER ROAD AND PAVEMENT, IT SHALL BE NOT LESS THAN 600mm.
2. PROVIDE STEEL REBAR REINFORCEMENT ON PAVED AREA.
3. ULTIMATE COMPRESSIVE STRENGTH OF CONCRETE F'c SHALL BE 13.8MPa (2000PSI)
4. REINFORCING BARS SHALL CONFORM TO PS GRADE 227, FY=227MPa (33,000PSI)
5. MAXIMUN SPACING OF PRECAST SPACER SHALL BE 1.5 METERS.
6. ALL DIMENSIONS ARE IN MILLIMETER, UNLESS OTHERWISE SPECIFIED.

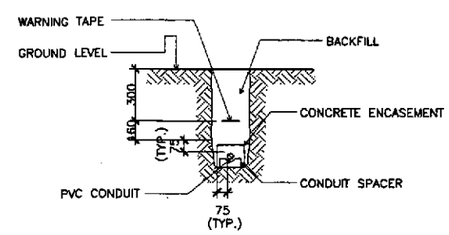

1 / ES-01 **TYPICAL DUCT SECTION**
NOT TO SCALE

ERNESTO M. ANTIOQUIA
ENGINEER
PTR. NO. 7403684 P.E.E. NO. 2913
ISSUED ON 01/02/2002 ISSUED AT CABUYAO, LAGUNA
T.I.N. 109-382-379

JICA
JAPAN INTERNATIONAL COOPERATION AGENCY
KEI KATAHIRA & ENGINEERS INTERNATIONAL
YEC YACHIYO ENGINEERING CO., LTD.

	DATE	SIGNATURE
DESIGNED	9/21/02	E. M. ANTIOQUIA
CHECKED	9/23/02	E. M. ANTIOQUIA
SUBMITTED	10/4/02	TEAM LEADER

REPUBLIC OF THE PHILIPPINES
DEPARTMENT OF PUBLIC WORKS AND HIGHWAYS

PJHL - PMO	BUREAU OF DESIGN		OFFICE OF THE SECRETARY	
Submitted By:	Reviewed By:	Recommended By:	Recommended By: (See cover sheet for Signature)	Approved By: (See cover sheet for Signature/Approval)
DANILO C. TRAJANO	FE M. BARRIENTOS	GILBERTO S. REYES	MANUEL M. BONDAN	SIMEON A. DATUMANONG
Project Director	Chief, Mechanical-Elect'l Div.	OIC, Director IV	Undersecretary	Secretary

PROJECT AND LOCATION :
THE DETAILED DESIGN STUDY ON UPGRADING INTER-URBAN HIGHWAY SYSTEM ALONG THE PAN-PHILIPPINE HIGHWAY (Plaridel, Cabanatuan and San Jose Bypasses)
PLARIDEL BYPASS - CONTRACT PACKAGE III

SCALE : AS SHOWN FULL SIZE A1

SHEET CONTENTS : NOTES & LEGENDS, SCHEMATIC CONTROL DIAG. & DUCT SECTION (INITIAL STAGE)

SHEET NO. : ES-01

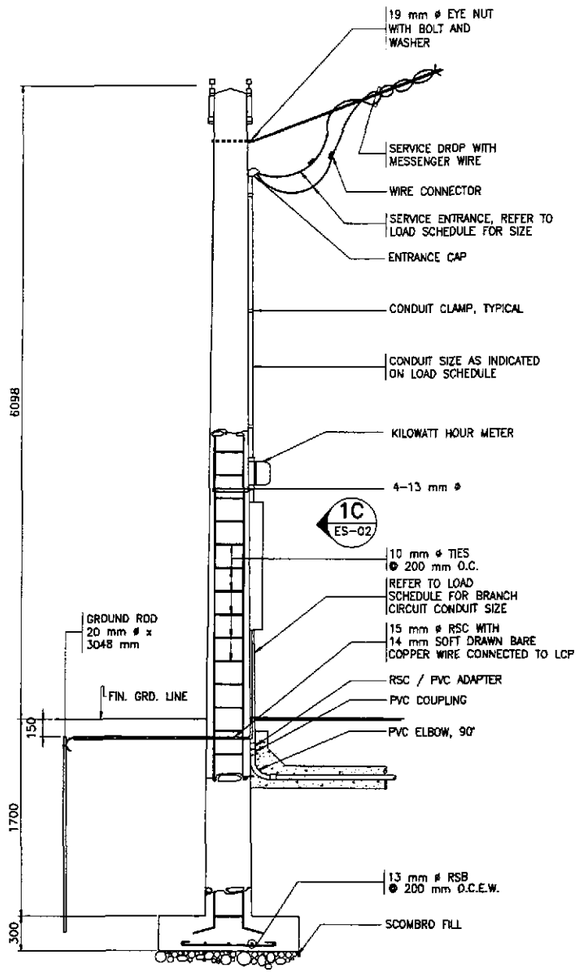

1A ES-02 SECTION

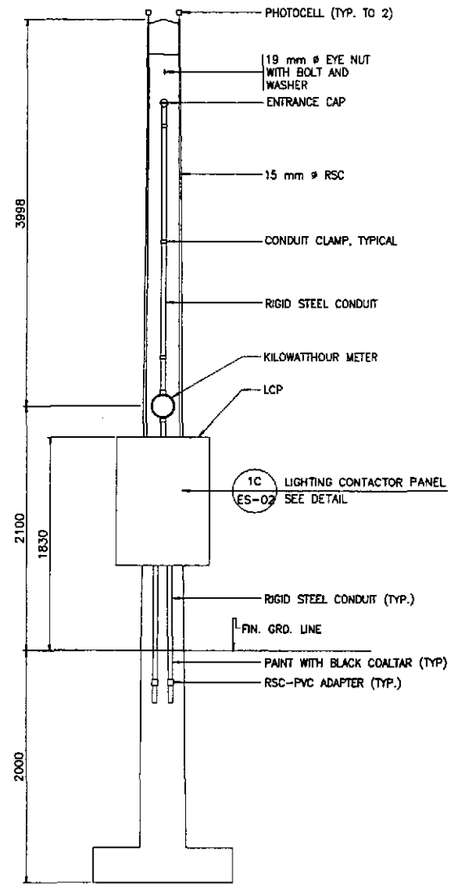

1B ES-02 ELEVATION

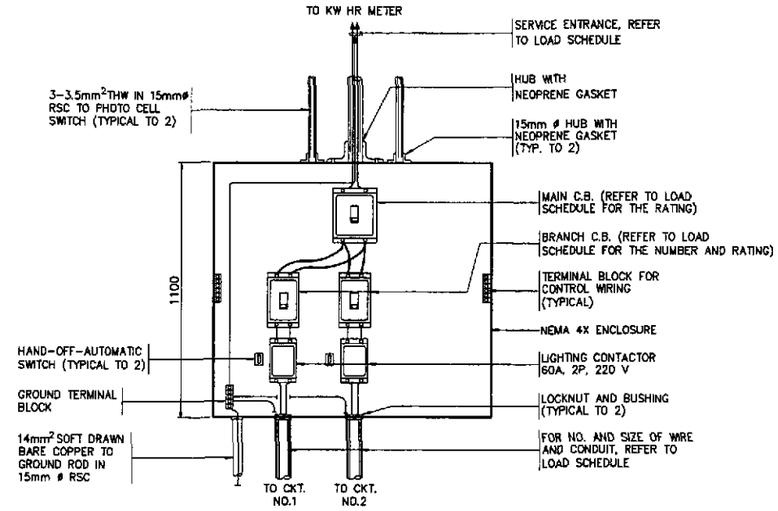

1C ES-02 DETAIL
SCALE 1:20

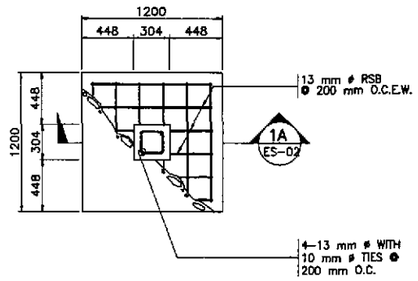

1D ES-02 FOOTING PLAN

1 ES-02 SERVICE POLE DETAILS
SCALE 1:20

ERNESTO M. ANTIOQUIA
ENGINEER
PTR. NO. 7403464 P.E.E. NO. 2913
ISSUED ON 01/02/2002 ISSUED AT CABUYAO, LAGUNA
T.I.N. 109-362-379

JICA
JAPAN INTERNATIONAL COOPERATION AGENCY
KATAHIRA & ENGINEERS INTERNATIONAL
YACHIYO ENGINEERING CO., LTD.

	DATE	SIGNATURE
DESIGNED	9/21/02	E. M. ANTIOQUIA
CHECKED	9/23/02	E. M. ANTIOQUIA
SUBMITTED	10/14/02	TEAM LEADER

REPUBLIC OF THE PHILIPPINES
DEPARTMENT OF PUBLIC WORKS AND HIGHWAYS

PJHL – PMO	BUREAU OF DESIGN		OFFICE OF THE SECRETARY	
Submitted By:	Reviewed By:	Recommended By:	Recommended By: (See cover sheet for Signature)	Aprroved By: (See cover sheet for Signature/Approval)
DANILO C. TRAJANO	FE M. BARRIENTOS	GILBERTO S. REYES	MANUEL M. BONDAN	SIMEON A. DATUMANONG
Project Director	Chief, Mechanical-Elect'l Div.	OIC, Director IV	Undersecretary	Secretary

PROJECT AND LOCATION :
THE DETAILED DESIGN STUDY ON UPGRADING INTER-URBAN HIGHWAY SYSTEM ALONG THE PAN-PHILIPPINE HIGHWAY (Plaridel, Cabanatuan and San Jose Bypasses)
PLARIDEL BYPASS - CONTRACT PACKAGE III

SCALE : AS SHOWN
FULL SIZE A1

SHEET CONTENTS : SERVICE POLE DETAILS (INITIAL STAGE)

SHEET NO. : ES-02

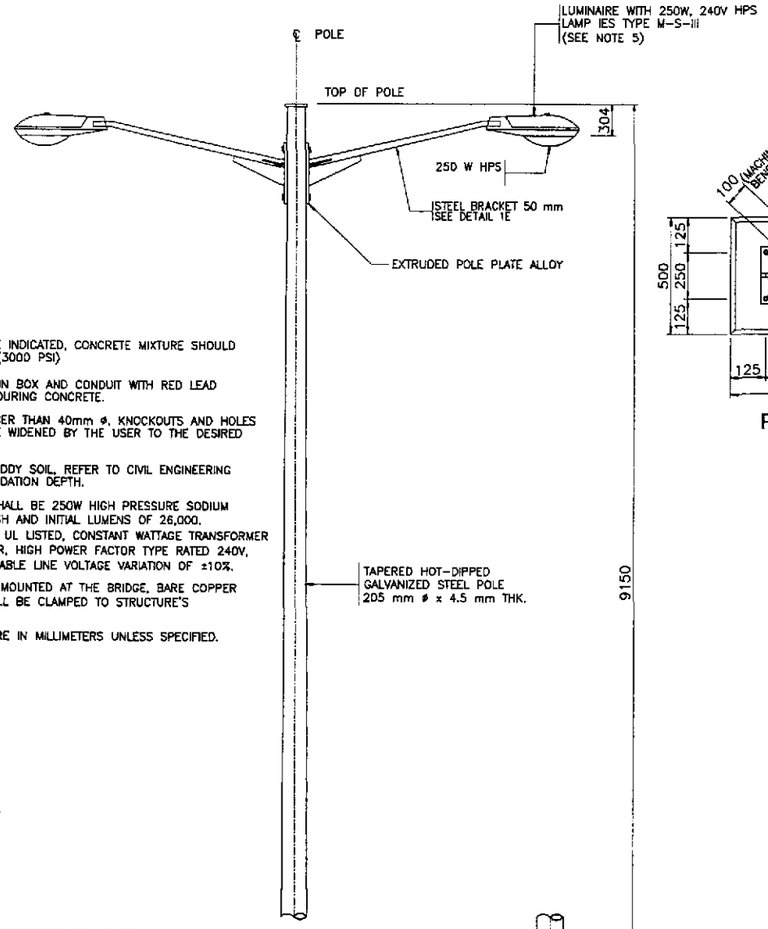

NOTES:

1. UNLESS OTHERWISE INDICATED, CONCRETE MIXTURE SHOULD BE 211 kg./cm (3000 PSI)
2. PAINT ALL JOINTS IN BOX AND CONDUIT WITH RED LEAD PRIMER BEFORE POURING CONCRETE.
3. FOR CONDUIT LARGER THAN 40mm ø, KNOCKOUTS AND HOLES SHALL HAVE TO BE WIDENED BY THE USER TO THE DESIRED DIAMETER.
4. FOR LOAM AND MUDDY SOIL, REFER TO CIVIL ENGINEERING FOR PROPER FOUNDATION DEPTH.
5. LUMINAIRE LAMP SHALL BE 250W HIGH PRESSURE SODIUM WITH DIFFUSE FINISH AND INITIAL LUMENS OF 26,000. BALLAST SHALL BE UL LISTED, CONSTANT WATTAGE TRANSFORMER CWA OR REGULATOR, HIGH POWER FACTOR TYPE RATED 240V, 60 Hz WITH ALLOWABLE LINE VOLTAGE VARIATION OF ±10%.
6. FOR STEEL POLES MOUNTED AT THE BRIDGE, BARE COPPER GROUND WIRE SHALL BE CLAMPED TO STRUCTURE'S REINFORCING BAR.
7. ALL DIMENSIONS ARE IN MILLIMETERS UNLESS SPECIFIED.

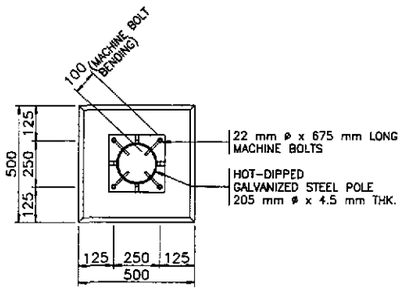

PLAN

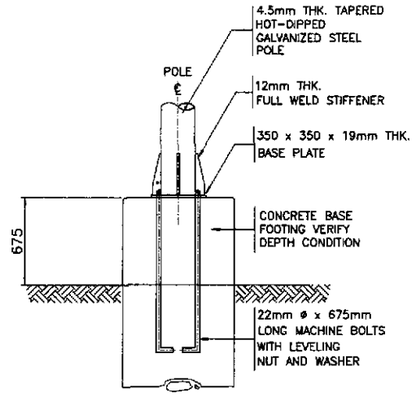

ELEVATION

1B / ES-03 BASE PLATE DETAIL

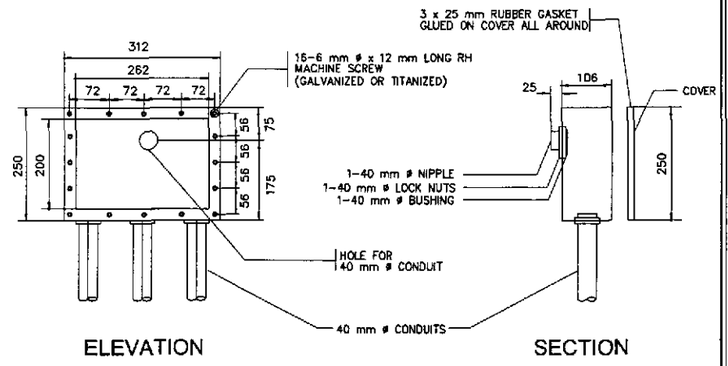

ELEVATION SECTION

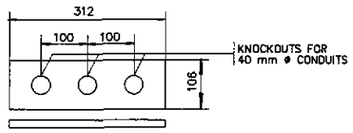

SECTION

MATERIAL:

JUNCTION BOX – 50 mm THICK CAST ALUMINUM FOR BOX AND COVER

ANCHOR BOLT – ASTM A-36

FINISH:

ANCHOR BOLT – ASTM A-153

1D / ES-03 JUNCTION BOX DETAILS

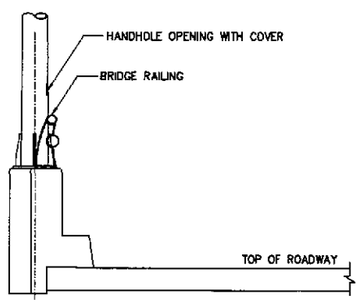

BRIDGE LEVEL

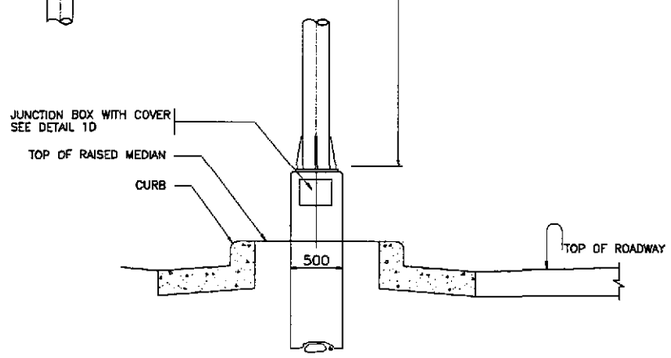

GROUND LEVEL

POLE SHAFT

LENGTH	BASE DIA.	POLE TOP DIA.
9000	205	115

1A / ES-03 ELEVATION

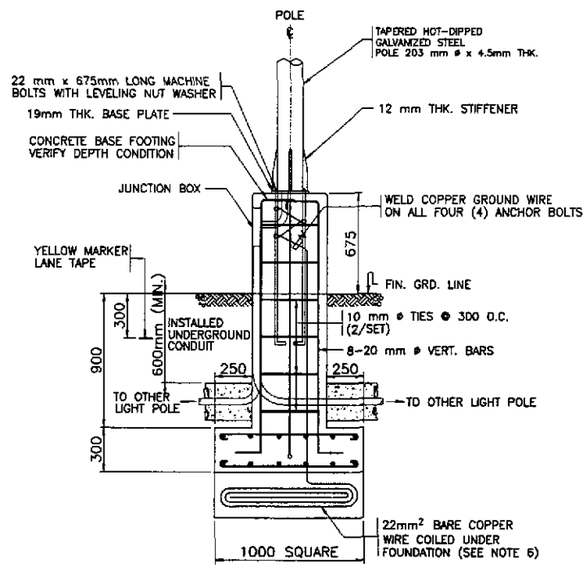

ELEVATION

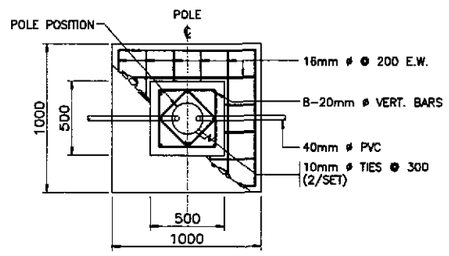

PLAN

1C / ES-03 STANDARD FOOTING DETAIL

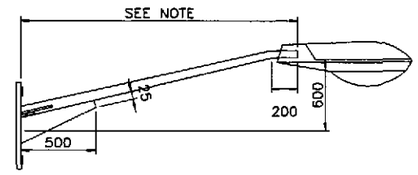

NOTE:

ARM LENGTH SHALL BE 3000mm UNLESS OTHERWISE INDICATED IN THE PLAN.

MATERIAL:

MAST ARM– B.I. PIPE AS PER PNS 26: 1984 (MEDIUM SERIES)
POLE SHAFT AS PER ASTM A-53 MOUNTING PLATE AND STIFFENERS

MACHINE BOLT– ANSI-C135.

FINISH:

HOT-DIP GALVANIZED PER LATEST EDITION OF ASTM A-123
MACHINE BOLT–ASTM A-153

1E / ES-03 MAST ARM DETAILS

ERNESTO M. ANTIOQUIA
ENGINEER
PTR. NO. 7403684 P.E.E. NO. 2913
ISSUED ON 01/02/2002 ISSUED AT CABUYAO, LAGUNA
T.I.N. 109-382-379

1 / ES-03 STREET LIGHT POLE DETAILS I
NOT TO SCALE

JICA
JAPAN INTERNATIONAL COOPERATION AGENCY
KEI KATAHIRA & ENGINEERS INTERNATIONAL
YEC YACHIYO ENGINEERING CO., LTD.

	DATE	SIGNATURE
DESIGNED	9/21/02	E. M. ANTIOQUIA
CHECKED	9/23/02	E. M. ANTIOQUIA
SUBMITTED	10/14/02	TEAM LEADER

REPUBLIC OF THE PHILIPPINES
DEPARTMENT OF PUBLIC WORKS AND HIGHWAYS

PJHL – PMO	BUREAU OF DESIGN		OFFICE OF THE SECRETARY	
Submitted By:	Reviewed By:	Recommended By:	Recommended By: (See cover sheet for Signature)	Approved By: (See cover sheet for Signature/Approval)
DANILO C. TRAJANO	FE M. BARRIENTOS	GILBERTO S. REYES	MANUEL M. BONDAN	SIMEON A. DATUMANONG
Project Director	Chief, Mechanical–Elect'l Div.	DIC, Director IV	Undersecretary	Secretary

PROJECT AND LOCATION :
THE DETAILED DESIGN STUDY ON UPGRADING INTER-URBAN HIGHWAY SYSTEM ALONG THE PAN-PHILIPPINE HIGHWAY (Plaridel, Cabanatuan and San Jose Bypasses)
PLARIDEL BYPASS - CONTRACT PACKAGE III

SCALE : AS SHOWN
FULL SIZE A1

SHEET CONTENTS : STREET LIGHT POLE DETAILS (INITIAL STAGE)

SHEET NO. : ES-03

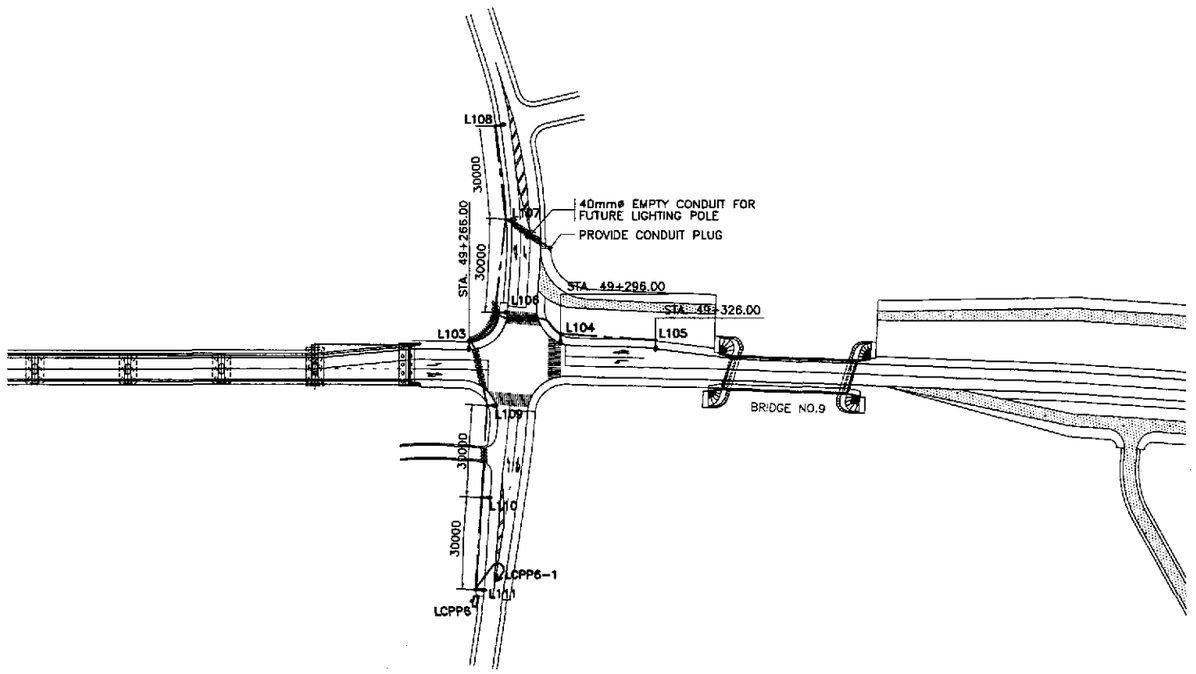

1 EI-01 ROADWAY LIGHTING PLAN
SCALE 1:1000

NOTE:

1. UNLESS OTHERWISE INDICATED, THE MINIMUM SIZE OF CIRCUIT CONDUCTORS FROM STEEL POLE JUNCTION BOX/HANDHOLE TO EACH LUMINAIRE SHALL BE 2-3.5mm² THW & 1-3.5mm² TW(GND) INSIDE STEEL POLE.

LOAD SCHEDULE

PANEL ID : LCPP6
FEED : TOP
MOUNTING : SURFACE

LIGHTING CONTACTOR
PANEL NO.6

ENCLOSURE : NEMA 4X
MIN. KAIC : 10
MAIN CB : 40 AT, 100 AF, 2P

CKT. NO.	LOAD DESCRIPTION	VOLTS	CONNECTED LOAD (VA)	CONNECTED LOAD AMPERE	NO. & SIZE OF WIRES & CONDUIT	PROTECTION AT	PROTECTION AF	PROTECTION P
1	L111 (1 x 250 W HPS)	220	310	1.41	SEE NOTE 1			
	L110 (1 x 250 W HPS)	220	310	1.41	SEE NOTE 1			
	L109 (1 x 250 W HPS)	220	310	1.41	SEE NOTE 1			
	L103 (1 x 250 W HPS)	220	310	1.41	SEE NOTE 1			
	L106 (1 x 250 W HPS)	220	310	1.41	SEE NOTE 1			
	L104 (1 x 250 W HPS)	220	310	1.41	SEE NOTE 1			
	L105 (1 x 250 W HPS)	220	310	1.41	SEE NOTE 1			
	L107 (1 x 250 W HPS)	220	310	1.41	SEE NOTE 1			
	L108 (1 x 250 W HPS)	220	310	1.41	SEE NOTE 1			
	SUB-TOTAL		2790	12.69	2-30 mm² THW & 1-8.0 mm² TW(G) IN 40 mmø CONDUIT	30	100	2
2	TRAFFIC LIGHTS	220	3450	15	WIRES AND CONDUIT (BY OTHERS)	30	100	2
	TOTAL		6240	27.69	2-38 mm² THW & IN 40 mmø CONDUIT	40	100	2

ERNESTO M. ANTIOQUIA
ENGINEER
PTR. NO. 7403884 P.E.E. NO. 2913
ISSUED ON 01/02/2002 ISSUED AT CABUYAO, LAGUNA
T.I.N. 109-382-379

JICA
JAPAN INTERNATIONAL COOPERATION AGENCY
KEI KATAHIRA & ENGINEERS INTERNATIONAL
YEC YACHIYO ENGINEERING CO., LTD.

	DATE	SIGNATURE
DESIGNED	9/21/02	E. M. ANTIOQUIA
CHECKED	9/23/02	E. M. ANTIOQUIA
SUBMITTED	10/14/02	TEAM LEADER

REPUBLIC OF THE PHILIPPINES
DEPARTMENT OF PUBLIC WORKS AND HIGHWAYS

PJML – PMO	BUREAU OF DESIGN		OFFICE OF THE SECRETARY	
Submitted By:	Reviewed By:	Recommended By:	Recommended By: (See cover sheet for Signature)	Aprroved By: (See cover sheet for Signature/Approval)
DANILO C. TRAJANO	FE M. BARRIENTOS	GILBERTO S. REYES	MANUEL M. BONDAN	SIMEON A. DATUMANONG
Project Director	Chief, Mechanical-Elect'l Div.	OIC, Director IV	Undersecretary	Secretary

PROJECT AND LOCATION :
THE DETAILED DESIGN STUDY ON UPGRADING INTER-URBAN HIGHWAY SYSTEM ALONG THE PAN-PHILIPPINE HIGHWAY (Plaridel, Cabanatuan and San Jose Bypasses)
PLARIDEL BYPASS - CONTRACT PACKAGE III

SCALE : 1:1000 FULL SIZE A1

SHEET CONTENTS :
ROADWAY LIGHTING PLAN AND LOAD SCHEDULE
INTERSECTION A-17 (INITIAL STAGE)

SHEET NO. : EI-01

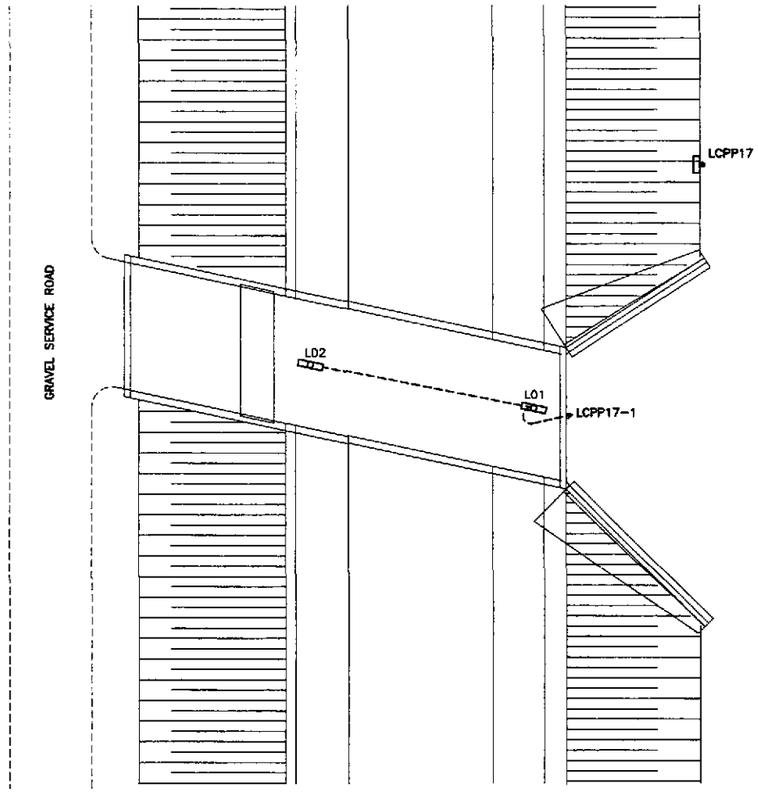

1 / EI-02 LIGHTING LAYOUT
B-9 (STA. 48+110.000)
NOT TO SCALE

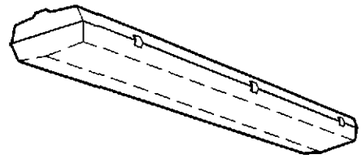

CEILING LUMINAIRE, SURFACE MOUNTED, IP56 (MINIMUM). HOUSING SHALL BE MADE FROM GLASS FIBRE REINFORCED POLYESTER RESIN. PATTERNED COVER SHALL BE MADE FROM POLYCARBONATE DIFFUSER. BALLAST SHALL BE UL LISTED, RAPID START HIGH POWER FACTOR TYPE.

SYMBOL	VOLT	LAMP	MOUNTING
	220	1 x 40W FLUORESCENT	SURFACE

2 / EI-02 LIGHTING FIXTURE SCHEDULE
NOT TO SCALE

LOAD SCHEDULE

PANEL ID : LCPP17
FEED : TOP
MOUNTING : SURFACE

LIGHTING CONTACTOR
PANEL NO.17

ENCLOSURE : NEMA 4X
MIN. KAIC : 1D
MAIN CB : 2D AT, 100 AF, 2P

CKT. NO.	LOAD DESCRIPTION	VOLTS	CONNECTED LOAD (VA)	CONNECTED LOAD AMPERE	NO. & SIZE OF WIRES & CONDUIT	PROTECTION AT	PROTECTION AF	PROTECTION P
1	L01 (1 x 40 W FLUORESCENT LAMP)	220	50	0.23				
	L02 (1 x 40 W FLUORESCENT LAMP)	220	50	0.23				
	L03 (1 x 40 W FLUORESCENT LAMP) – FUTURE	220	50	0.23				
	L04 (1 x 40 W FLUORESCENT LAMP) – FUTURE	220	50	0.23				
	SUB–TOTAL		200	0.92	2–5.5 mm² THW & 1–3.5 mm² TW(G) IN 20 mmø CONDUIT			
	TOTAL		200	0.92	2–5.5 mm² THW IN 20 mmø CONDUIT	20	100	2

ERNESTO M. ANTIOQUIA
ENGINEER
PTR. NO. 7403884 P.E.E. NO. 2913
ISSUED ON 01/02/2002 ISSUED AT CABUYAO, LAGUNA
T.I.N. 109-382-378

JICA
JAPAN INTERNATIONAL COOPERATION AGENCY
KEI KATAHIRA & ENGINEERS INTERNATIONAL
YEC YACHIYO ENGINEERING CO., LTD.

	DATE	SIGNATURE
DESIGNED	9/21/02	E. M. ANTIOQUIA
CHECKED	9/23/02	E. M. ANTIOQUIA
SUBMITTED	10/11/02	A. KURATA TEAM LEADER

REPUBLIC OF THE PHILIPPINES
DEPARTMENT OF PUBLIC WORKS AND HIGHWAYS

PJHL – PMO	BUREAU OF DESIGN		OFFICE OF THE SECRETARY	
Submitted By:	Reviewed By:	Recommended By:	Recommended By: (See cover sheet for Signature)	Approved By: (See cover sheet for Signature/Approval)
DANILO C. TRAJANO	FE M. BARRIENTOS	GILBERTO S. REYES	MANUEL M. BONOAN	SIMEON A. DATUMAKONG
Project Director	Chief, Mechanical–Elect'l Div.	OIC, Director IV	Undersecretary	Secretary

PROJECT AND LOCATION :
THE DETAILED DESIGN STUDY ON UPGRADING INTER-URBAN HIGHWAY SYSTEM ALONG THE PAN-PHILIPPINE HIGHWAY (Plaridel, Cabanatuan and San Jose Bypasses)
PLARIDEL BYPASS - CONTRACT PACKAGE III

SCALE : NOT TO SCALE
FULL SIZE A1

SHEET CONTENTS :
LIGHTING LAYOUT, LOAD SCHEDULE & LIGHTING FIXTURE SCHEDULE
BOX CULVERT (B - 9)
(INITIAL STAGE)

SHEET NO. : EI-02

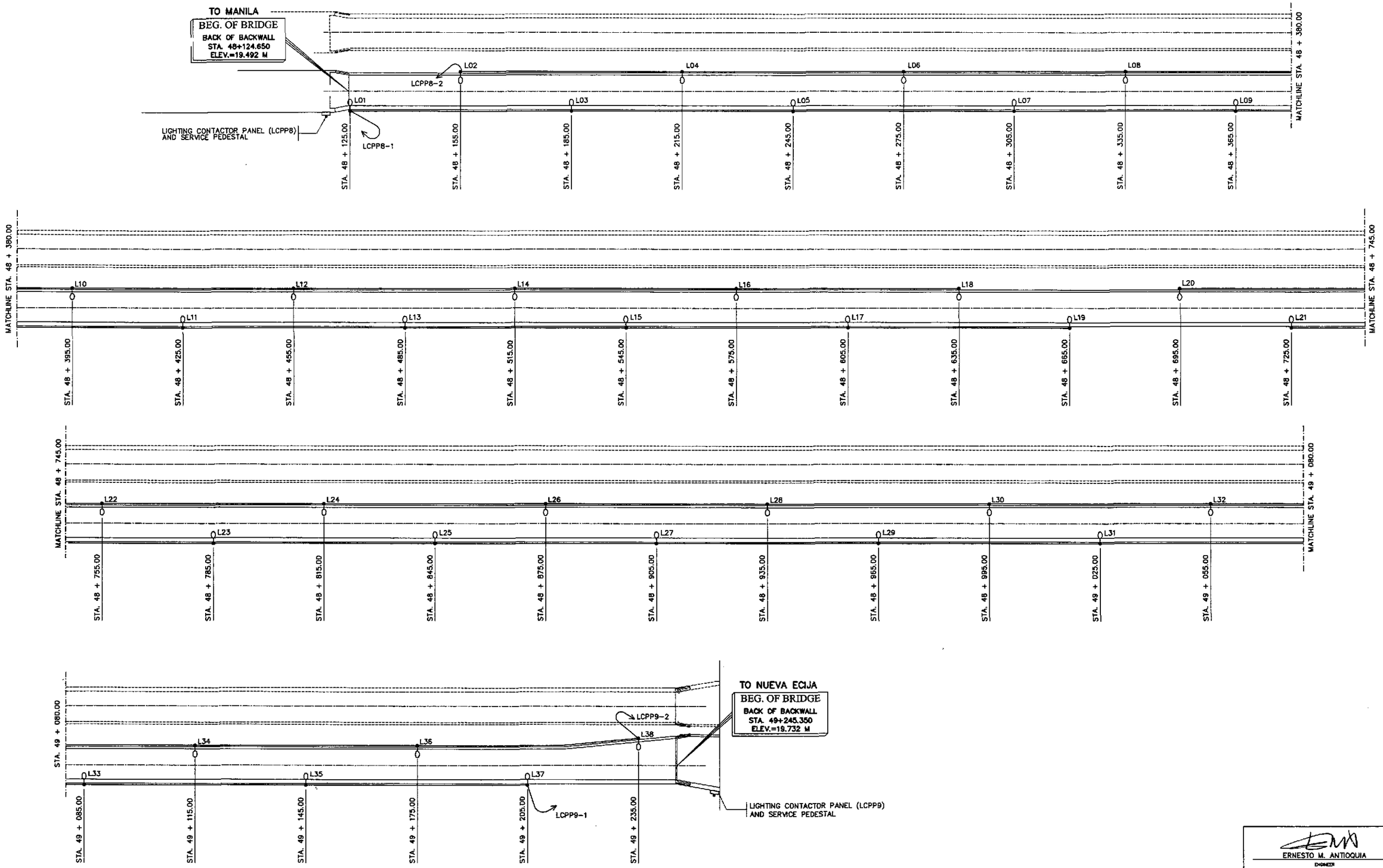

1 / EB-01 **LIGHTING LAYOUT**
SCALE 1:500

ERNESTO M. ANTIOQUIA
ENGINEER
PTR. NO. 7403884 P.E.C. NO. 2813
ISSUED ON 01/02/2002 ISSUED AT CABUYAO, LAGUNA
T.I.N. 108-382-379

JICA
JAPAN INTERNATIONAL COOPERATION AGENCY
KEI KATAHIRA & ENGINEERS INTERNATIONAL
YEC YACHIYO ENGINEERING CO., LTD.

	DATE	SIGNATURE
DESIGNED	9/21/02	E. M. ANTIOQUIA
CHECKED	9/23/02	E. M. ANTIOQUIA
SUBMITTED	10/4/02	TEAM LEADER

REPUBLIC OF THE PHILIPPINES
DEPARTMENT OF PUBLIC WORKS AND HIGHWAYS

PJHL - PMO	BUREAU OF DESIGN		OFFICE OF THE SECRETARY	
Submitted By:	Reviewed By:	Recommended By:	Recommended By: (See cover sheet for Signature)	Approved By: (See cover sheet for Signature/Approval)
DANILO C. TRAJANO	FE M. BARRIENTOS	GILBERTO S. REYES	MANUEL M. BONOAN	SIMEON A. DATUMANONG
Project Director	Chief, Mechanical-Elect'l Div.	OIC, Director V	Undersecretary	Secretary

PROJECT AND LOCATION :
THE DETAILED DESIGN STUDY ON UPGRADING INTER-URBAN HIGHWAY SYSTEM ALONG THE PAN-PHILIPPINE HIGHWAY (Plaridel, Cabanatuan and San Jose Bypasses)
PLARIDEL BYPASS - CONTRACT PACKAGE III

SCALE : AS SHOWN
FULL SIZE A1

SHEET CONTENTS :
BRIDGE NO. 8 ANGAT RIVER BRIDGE
ROADWAY LIGHTING LAYOUT PLAN
(INITIAL STAGE)

SHEET NO. : EB-01

NOTE:

1. UNLESS OTHERWISE INDICATED, THE MINIMUM SIZE OF CIRCUIT CONDUCTORS FROM STEEL POLE JUNCTION BOX/HANDHOLE TO EACH LUMINAIRE SHALL BE 2–3.5mm² THW & 1–3.5mm² TW(GND) INSIDE STEEL POLE.

LOAD SCHEDULES

PANEL ID : LCPP8
FEED : TOP
MOUNTING : SURFACE

LIGHTING CONTACTOR PANEL NO.8

ENCLOSURE : NEMA 4X
MIN. KAIC : 10
MAIN CB : 40 AT, 100 AF, 2P

CKT. NO.	LOAD DESCRIPTION	VOLTS	CONNECTED LOAD (VA)	CONNECTED LOAD AMPERE	NO. & SIZE OF WIRES & CONDUIT	PROTECTION AT	PROTECTION AF	PROTECTION P
1	L01 (1 x 250 W HPS)	220	310	1.41	SEE NOTE 1			
	L03 (1 x 250 W HPS)	220	310	1.41	SEE NOTE 1			
	L05 (1 x 250 W HPS)	220	310	1.41	SEE NOTE 1			
	L07 (1 x 250 W HPS)	220	310	1.41	SEE NOTE 1			
	L09 (1 x 250 W HPS)	220	310	1.41	SEE NOTE 1			
	L11 (1 x 250 W HPS)	220	310	1.41	SEE NOTE 1			
	L13 (1 x 250 W HPS)	220	310	1.41	SEE NOTE 1			
	L15 (1 x 250 W HPS)	220	310	1.41	SEE NOTE 1			
	L17 (1 x 250 W HPS)	220	310	1.41	SEE NOTE 1			
	L19 (1 x 250 W HPS)	220	310	1.41	SEE NOTE 1			
	SUB-TOTAL		3100	14.1	2–30 mm² THW & 1–8.0 mm² TW(G) IN 40 mmø CONDUIT	30	100	2
2	L02 (1 x 250 W HPS)	220	310	1.41	SEE NOTE 1			
	L04 (1 x 250 W HPS)	220	310	1.41	SEE NOTE 1			
	L06 (1 x 250 W HPS)	220	310	1.41	SEE NOTE 1			
	L08 (1 x 250 W HPS)	220	310	1.41	SEE NOTE 1			
	L10 (1 x 250 W HPS)	220	310	1.41	SEE NOTE 1			
	L12 (1 x 250 W HPS)	220	310	1.41	SEE NOTE 1			
	L14 (1 x 250 W HPS)	220	310	1.41	SEE NOTE 1			
	L16 (1 x 250 W HPS)	220	310	1.41	SEE NOTE 1			
	L18 (1 x 250 W HPS)	220	310	1.41	SEE NOTE 1			
	SUB-TOTAL		2790	12.69	2–30 mm² THW & 1–8.0 mm² TW(G) IN 40 mmø CONDUIT	30	100	2
	TOTAL		5890	26.79	2–38 mm² THW IN 40 mmø CONDUIT	40	100	2

PANEL ID : LCPP9
FEED : TOP
MOUNTING : SURFACE

LIGHTING CONTACTOR PANEL NO.9

ENCLOSURE : NEMA 4X
MIN. KAIC : 10
MAIN CB : 40 AT, 100 AF, 2P

CKT. NO.	LOAD DESCRIPTION	VOLTS	CONNECTED LOAD (VA)	CONNECTED LOAD AMPERE	NO. & SIZE OF WIRES & CONDUIT	PROTECTION AT	PROTECTION AF	PROTECTION P
1	L37 (1 x 250 W HPS)	220	310	1.41	SEE NOTE 1			
	L35 (1 x 250 W HPS)	220	310	1.41	SEE NOTE 1			
	L33 (1 x 250 W HPS)	220	310	1.41	SEE NOTE 1			
	L31 (1 x 250 W HPS)	220	310	1.41	SEE NOTE 1			
	L29 (1 x 250 W HPS)	220	310	1.41	SEE NOTE 1			
	L27 (1 x 250 W HPS)	220	310	1.41	SEE NOTE 1			
	L25 (1 x 250 W HPS)	220	310	1.41	SEE NOTE 1			
	L23 (1 x 250 W HPS)	220	310	1.41	SEE NOTE 1			
	L21 (1 x 250 W HPS)	220	310	1.41	SEE NOTE 1			
	SUB-TOTAL		2790	12.69	2–30 mm² THW & 1–8.0 mm² TW(G) IN 40 mmø CONDUIT	30	100	2
2	L38 (1 x 250 W HPS)	220	310	1.41	SEE NOTE 1			
	L36 (1 x 250 W HPS)	220	310	1.41	SEE NOTE 1			
	L34 (1 x 250 W HPS)	220	310	1.41	SEE NOTE 1			
	L32 (1 x 250 W HPS)	220	310	1.41	SEE NOTE 1			
	L30 (1 x 250 W HPS)	220	310	1.41	SEE NOTE 1			
	L28 (1 x 250 W HPS)	220	310	1.41	SEE NOTE 1			
	L26 (1 x 250 W HPS)	220	310	1.41	SEE NOTE 1			
	L24 (1 x 250 W HPS)	220	310	1.41	SEE NOTE 1			
	L22 (1 x 250 W HPS)	220	310	1.41	SEE NOTE 1			
	L20 (1 x 250 W HPS)	220	310	1.41	SEE NOTE 1			
	SUB-TOTAL		3100	14.10	2–30 mm² THW & 1–8.0 mm² TW(G) IN 40 mmø CONDUIT	30	100	2
	TOTAL		5890	26.79	2–38 mm² THW IN 40 mmø CONDUIT	40	100	2

ERNESTO M. ANTIOQUIA
ENGINEER
PTR. NO. 7403684 P.E.C. NO. 2813
ISSUED ON 01/02/2002 ISSUED AT CABUYAO, LAGUNA
T.I.N. 108-382-379

JICA
JAPAN INTERNATIONAL COOPERATION AGENCY
KEI KATAHIRA & ENGINEERS INTERNATIONAL
YEC YACHIYO ENGINEERING CO., LTD.

	DATE	SIGNATURE
DESIGNED	9/21/02	E. M. ANTIOQUIA
CHECKED	9/23/02	E. M. ANTIOQUIA
SUBMITTED	10/4/02	TEAM LEADER

REPUBLIC OF THE PHILIPPINES
DEPARTMENT OF PUBLIC WORKS AND HIGHWAYS

PJHL – PMO	BUREAU OF DESIGN		OFFICE OF THE SECRETARY	
Submitted By:	Reviewed By:	Recommended By:	Recommended By: (See cover sheet for Signature)	Approved By: (See cover sheet for Signature/Approval)
DANILO C. TRAJANO	FE M. BARRIENTOS	GILBERTO S. REYES	MANUEL M. BONDAN	SIMEON A. DATUMANONG
Project Director	Chief, Mechanical–Elect'l Div.	OIC, Director IV	Undersecretary	Secretary

PROJECT AND LOCATION :
THE DETAILED DESIGN STUDY ON UPGRADING INTER-URBAN HIGHWAY SYSTEM ALONG THE PAN-PHILIPPINE HIGHWAY (Plaridel, Cabanatuan and San Jose Bypasses)
PLARIDEL BYPASS - CONTRACT PACKAGE III

SCALE : AS SHOWN FULL SIZE A1

SHEET CONTENTS :
BRIDGE NO. 8 ANGAT RIVER BRIDGE
LOAD SCHEDULE
(INITIAL STAGE)

SHEET NO. : EB-02

ENGR'S FIELD OFFICE & LIVING QUARTERS

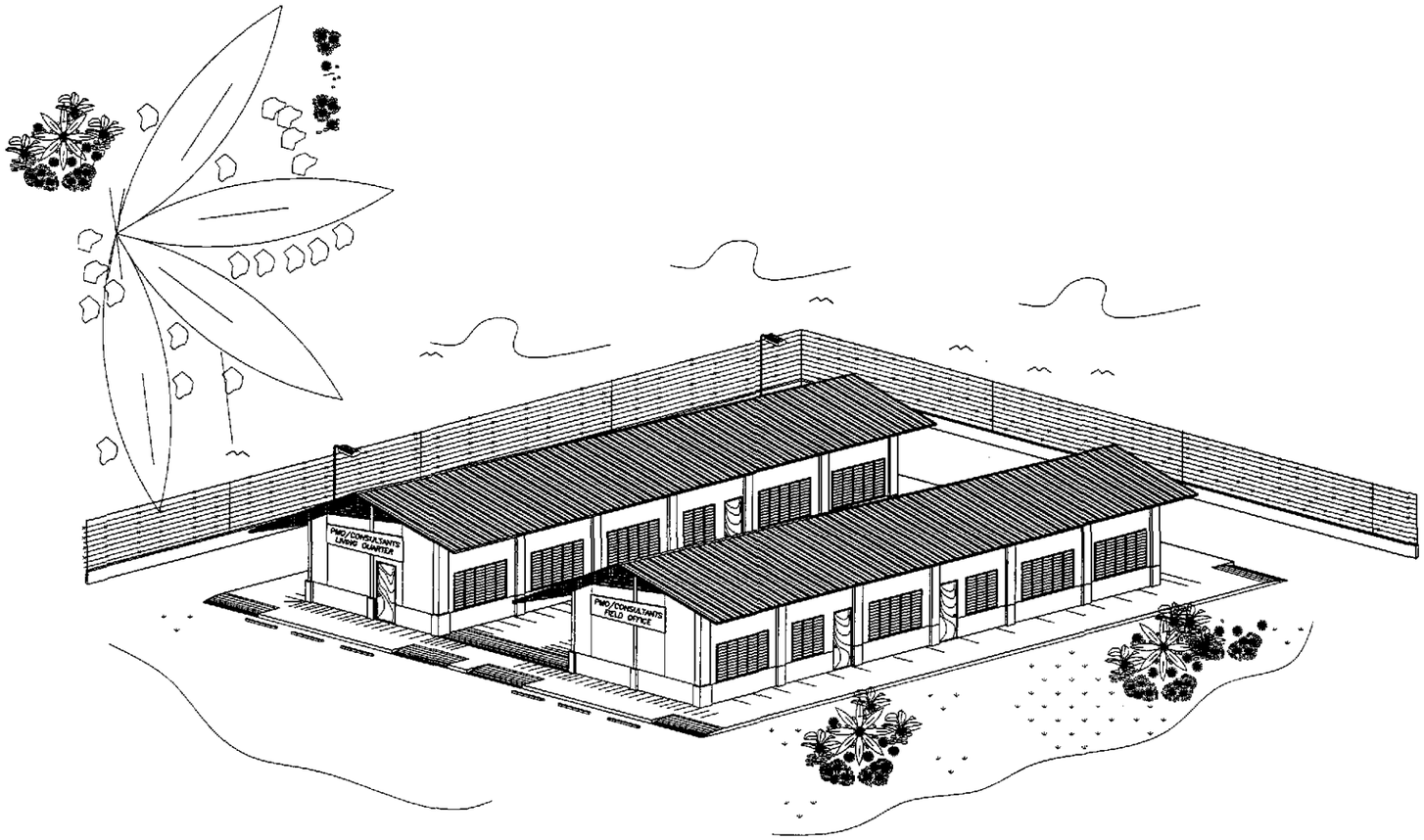

P E R S P E C T I V E

GENERAL NOTES :

IT IS THE INTENTION OF THE DPWH THAT AFTER COMPLETION OF THE PROJECTS ALL PRE-FABRICATED METAL FIELD OFFICES WITH LABORATORY AND ENGINEER'S QUARTERS BUILDINGS BE DONATED TO THE NEAREST PUBLIC SCHOOL. THESE AFOREMENTIONED BUILDINGS SHOULD THEREFORE BE LOCATED WITHIN A PUBLIC SCHOOL COMPOUND OR ON A GOVERNMENT LOT THAT COULD BE EASILY ACQUIRED BY THE DEPARTMENT OF EDUCATION. FOR NEW SCHOOL SITE. IF NONE IS AVAILABLE, THEN THE PRE-FABRICATED METAL COMPONENTS SHALL BE DISMANTLED AFTER COMPLETION OF THE PROJECT FOR DONATION TO THE NEAREST PUBLIC SCHOOL AUTHORITIES OR TO THE LOCAL GOVERNMENT UNIT WHERE SAID PROJECT IS LOCATED.

ARNEL P. GONZALES
ENGINEER

PTR. NO. 5846340 P.R.C. NO. 53457
ISSUED ON 04/26/2002 T.I.N. 138-062-682
ISSUED AT SAN JUAN,M.M.

TABLE OF CONTENTS

ARCHITECTURAL :

FA-01 PERSPECTIVE
TABLE OF CONTENTS

02 ENGINEER'S FIELD OFFICE/LABORATORY
FLOOR PLAN
FRONT & REAR ELEV.
LEFT & RIGHT SIDE ELEV.
LONGITUDINAL & CROSS SECT.
REFLECTED CEILING PLAN

03 ENGINEER'S LIVING QUARTERS
FLOOR PLAN
FRONT & REAR ELEV.
LEFT & RIGHT SIDE ELEV.
LONGITUDINAL & CROSS SECT.
REFLECTED CEILING PLAN

04 ENGINEER'S FIELD OFFICE/LABORATORY
ROOF PLAN
DET. CROSS SECTION
SCHEDULE OF DOORS & WINDOWS

05 ENGINEER'S LIVING QUARTERS
ROOF PLAN
DET. CROSS SECTION
SCHEDULE OF DOORS & WINDOWS

STRUCTURAL :

FA-06 FOUNDATION PLAN,
R.C. RAMP DETAIL
DET. OF F-1, P-1, WF-1
DESIGN CRITERIA

07 ENGINEER'S FIELD OFFICE/LABORATORY
ELEV. OF STEEL STUD FRAMES
FRAMES SCHEMATIC DIAGRAMS

08 ENGINEER'S LIVING QUARTERS
ELEV. OF STEEL STUD FRAMES
FRAMES SCHEMATIC DIAGRAMS

09 ENGINEER'S FIELD OFFICE/LABORATORY
REAR AND LEFT SIDE ELEVATION OF
STEEL STUD FRAMES, AND
SCHEMATIC DIAGRAMS

10 ENGINEER'S LIVING QUARTERS
REAR AND LEFT SIDE ELEVATION OF
STEEL STUD FRAME, AND
SCHEMATIC DIAGRAMS

11 DETAIL CONNECTIONS,
DETAILS 1 TO 15

12 ROOF FRAMING PLAN
SCHEM.DIAGRAM (INT. WALLS)
PURLIN CONNCECTION
CROSS BRACING CONNECTION

ELECTRICAL :

FE-01 ENGINEER'S FIELD OFFICE/LABORATORY
LIGHTING LAYOUT
POWER LAYOUT
ELECT'L. SYMBOLS & GEN. NOTES

02 ENGINEER'S LIVING QUARTERS
LIGHTING LAYOUT
POWER LAYOUT
ELECT'L. SYMBOLS & GEN. NOTES

03 SCHEDULE OF LOADS
AND COMPUTATIONS
ELECT'L. RISER DIAGRAMS

PLUMBING :

FP-01 SEWER AND WATER LINE LAYOUT
ISOMETRIC DIAGRAM

02 SEPTIC TANK DETAILS

EXTERNAL :

FX-01 PLOT PLAN
ELEV - FENCE & GATE
FOUNDATION DETAIL

REPUBLIC OF THE PHILIPPINES
OFFICE OF THE MUNICIPAL / CITY
ENGINEER / BUILDING OFFICIAL

CITY / DISTRICT / MUNICIPALITY

LAND USE and ZONING

LINE and GRADE

ARCHITECTURAL

STRUCTURAL

SANITARY

ELECTRICAL

MECHANICAL

JICA
JAPAN INTERNATIONAL COOPERATION AGENCY

KEI KATAHIRA & ENGINEERS INTERNATIONAL
YEC YACHIYO ENGINEERING CO., LTD.

	DATE	SIGNATURE
DESIGNED	9/21/02	A. P. GONZALES
CHECKED	9/23/02	A. P. GONZALES
SUBMITTED	10/11/02	TEAM LEADER

REPUBLIC OF THE PHILIPPINES
DEPARTMENT OF PUBLIC WORKS AND HIGHWAYS

PJHL - PMO	BUREAU OF DESIGN		OFFICE OF THE SECRETARY	
Submitted By:	Reviewed By:	Recommended By:	Recommended By: (See cover sheet for Signature)	Approved By: (See cover sheet for Signature/Approval)
DANILO C. TRAJANO	EMMANUEL P. CUNTAPAY	GILBERTO S. REYES	MANUEL M. BONDAN	SIMEON A. DATUMANONG
Project Director	Chief, Architectural Division	OIC, Director IV	Undersecretary	Secretary

PROJECT AND LOCATION :
THE DETAILED DESIGN STUDY ON UPGRADING INTER-URBAN HIGHWAY SYSTEM ALONG THE PAN-PHILIPPINE HIGHWAY (Plaridel, Cabanatuan and San Jose Bypasses)
PLARIDEL BYPASS - CONTRACT PACKAGE III

SCALE : NOT TO SCALE
FULL SIZE A1

SHEET CONTENTS :
ENGINEER'S FIELD OFFICE AND LIVING QUARTERS
PERSPECTIVE AND TABLE OF CONTENTS

SHEET NO. : FA-01

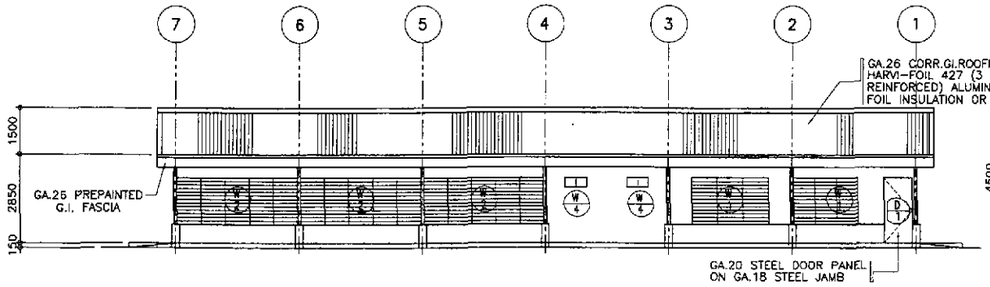

3 FA-02 REAR ELEVATION
SCALE 1:100

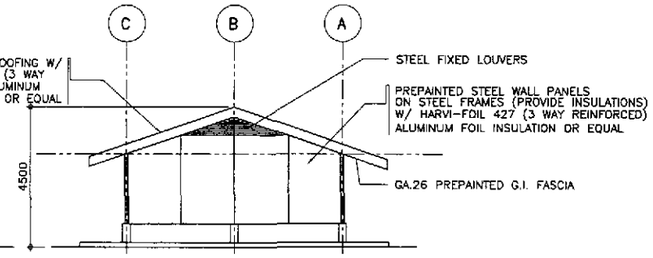

5 FA-02 LEFT SIDE ELEVATION
SCALE 1:100

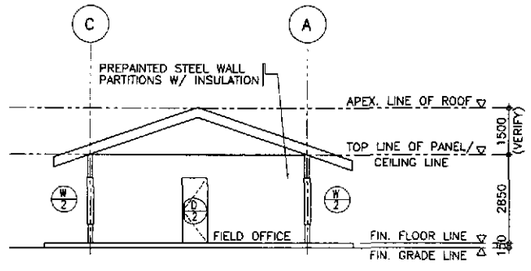

8 FA-02 CROSS SECTION
SCALE 1:100

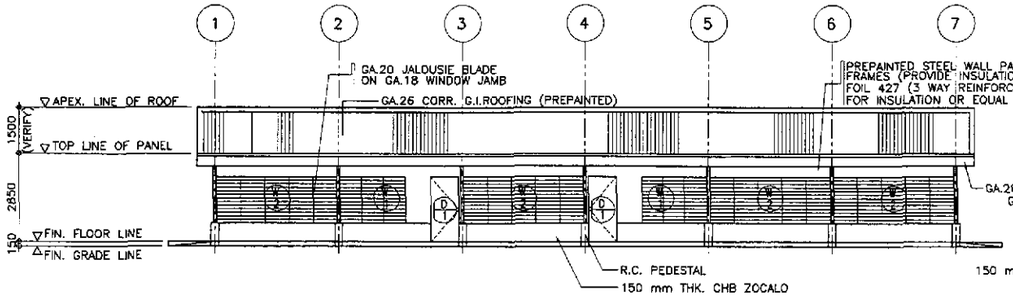

2 FA-02 FRONT ELEVATION
SCALE 1:100

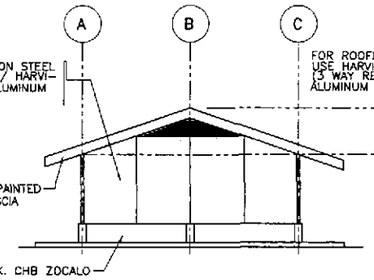

4 FA-02 RIGHT SIDE ELEVATION
SCALE 1:100

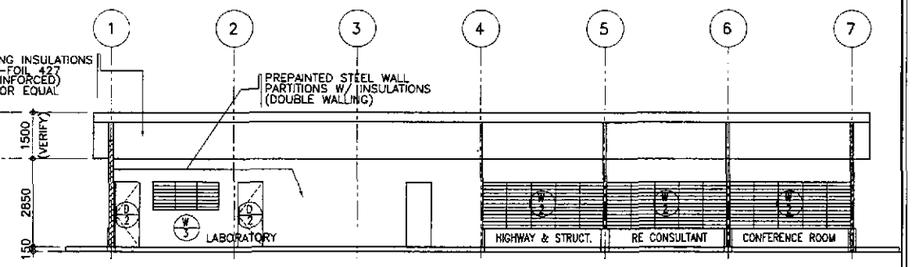

7 FA-02 LONGITUDINAL SECTION
SCALE 1:100

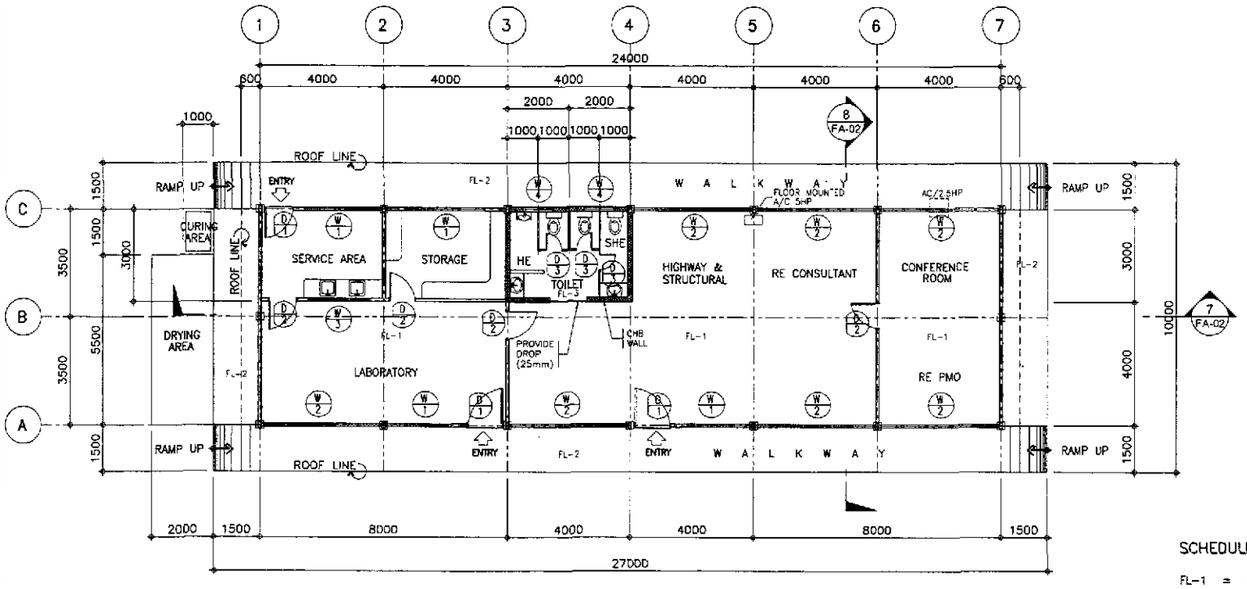

1 FA-02 FLOOR PLAN FOR ENGINEER'S FIELD OFFICE/LABORATORY
SCALE 1:100

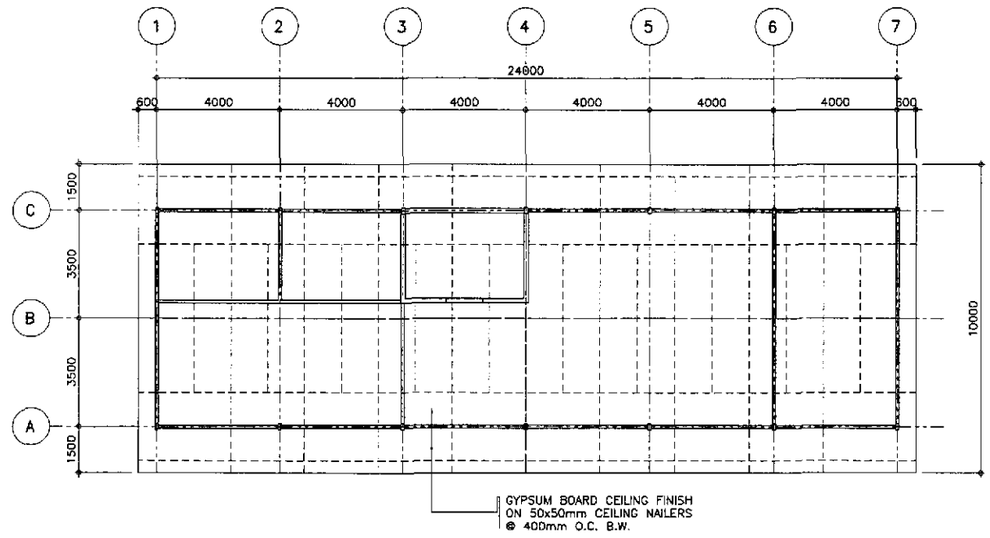

6 FA-02 REFLECTED CEILING PLAN
SCALE 1:100

SCHEDULE OF FLOOR FINISHES

FL-1 = PLAIN CEMENT FLOOR FINISH
FL-2 = PLAIN CEMENT FLOOR FINISH WITH NON SKID CEMENT WITH GROOVE LINES
FL-3 = UNGLAZED TILE FINISH, 200x200mm

ARNEL P. GONZALES
ENGINEER

PTR. NO. 5846340 P.R.C. NO. 53457
ISSUED ON 04/26/2002 T.I.N. 138-052-682
ISSUED AT SAN JUAN,M.M.

JICA
JAPAN INTERNATIONAL COOPERATION AGENCY
KEI KATAHIRA & ENGINEERS INTERNATIONAL
YEC YACHIYO ENGINEERING CO., LTD.

	DATE	SIGNATURE
DESIGNED	9/21/02	P. GONZALES
CHECKED	9/23/02	A. GONZALES
SUBMITTED	10/1/02	TEAM LEADER

REPUBLIC OF THE PHILIPPINES
DEPARTMENT OF PUBLIC WORKS AND HIGHWAYS

PJHL – PMO	BUREAU OF DESIGN		OFFICE OF THE SECRETARY	
Submitted By:	Reviewed By:	Recommended By:	Recommended By: (See cover sheet for Signature)	Approved By: (See cover sheet for Signature/Approval)
DANILO C. TRAJANO	EMMANUEL P. CUNTAPAY	GILBERTO S. REYES	MANUEL M. BONOAN	SIMEON A. DATUMANONG
Project Director	Chief, Architectural Division	OIC, Director IV	Undersecretary	Secretary

PROJECT AND LOCATION :
THE DETAILED DESIGN STUDY ON UPGRADING INTER-URBAN HIGHWAY SYSTEM ALONG THE PAN-PHILIPPINE HIGHWAY (Plaridel, Cabanatuan and San Jose Bypasses)
PLARIDEL BYPASS - CONTRACT PACKAGE III

SCALE : AS SHOWN FULL SIZE A1

SHEET CONTENTS :
ENGR'S FIELD OFFICE / LABORATORY
FLOOR PLAN, ELEVATIONS, CROSS-SECTIONS AND REFLECTED CEILING PLAN

SHEET NO. : FA-02

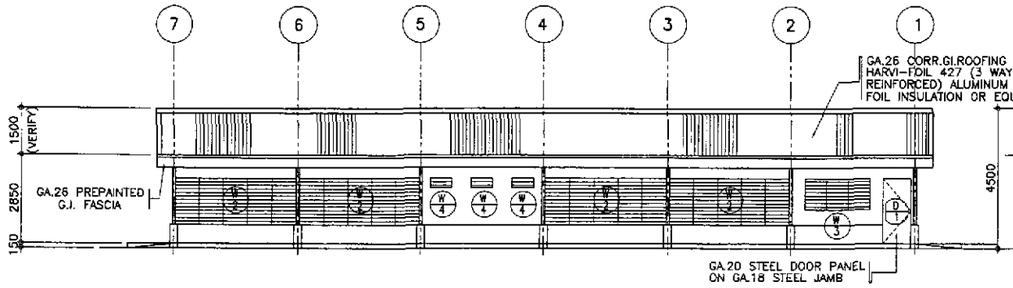

3 FA-03 REAR ELEVATION
SCALE 1:100

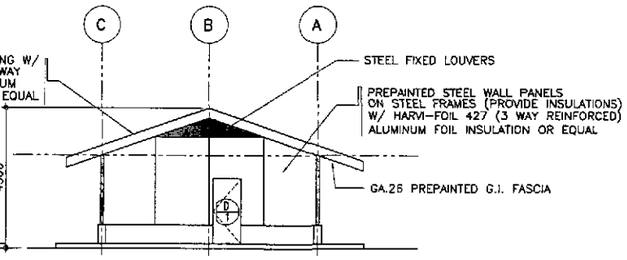

5 FA-03 LEFT SIDE ELEVATION
SCALE 1:100

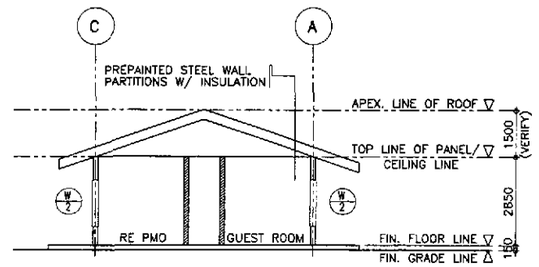

8 FA-03 CROSS SECTION
SCALE 1:100

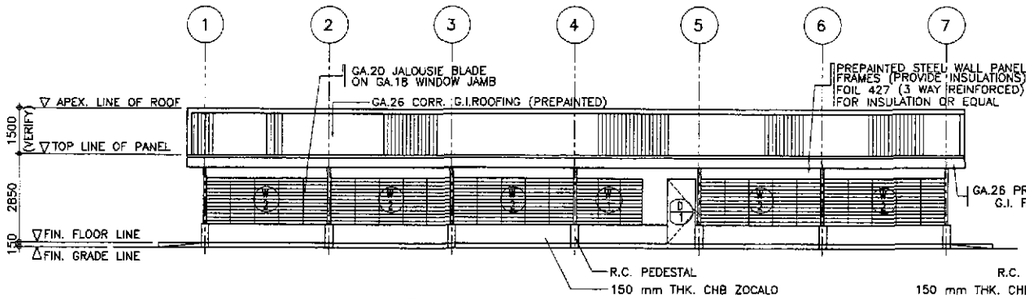

2 FA-03 FRONT ELEVATION
SCALE 1:100

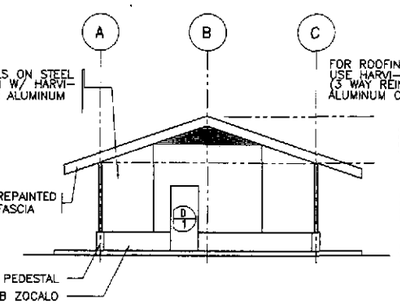

4 FA-03 RIGHT SIDE ELEVATION
SCALE 1:100

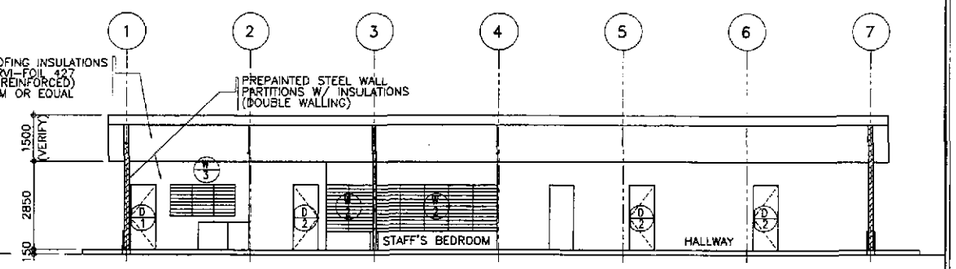

7 FA-03 LONGITUDINAL SECTION
SCALE 1:100

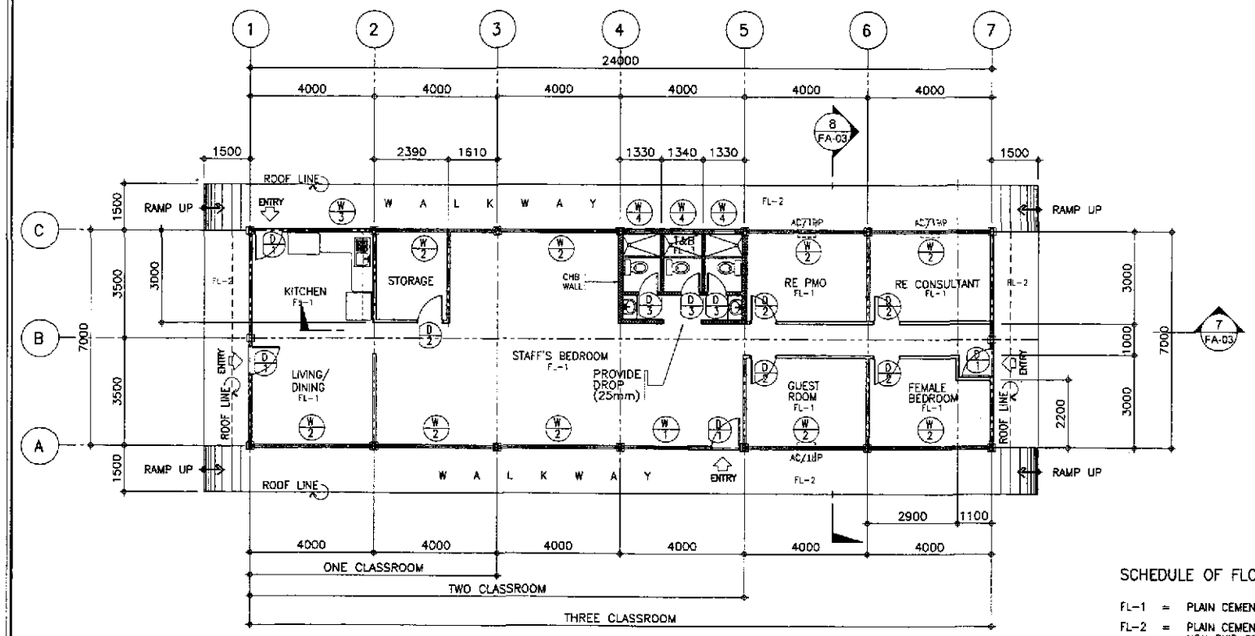

1 FA-03 FLOOR PLAN FOR ENGINEER'S LIVING QUARTER
SCALE 1:100

SCHEDULE OF FLOOR FINISHES

FL-1 = PLAIN CEMENT FLOOR FINISH
FL-2 = PLAIN CEMENT FLOOR FINISH WITH NON SKID CEMENT WITH GROOVE LINES
FL-3 = UNGLAZED TILE FINISH, 200x200mm

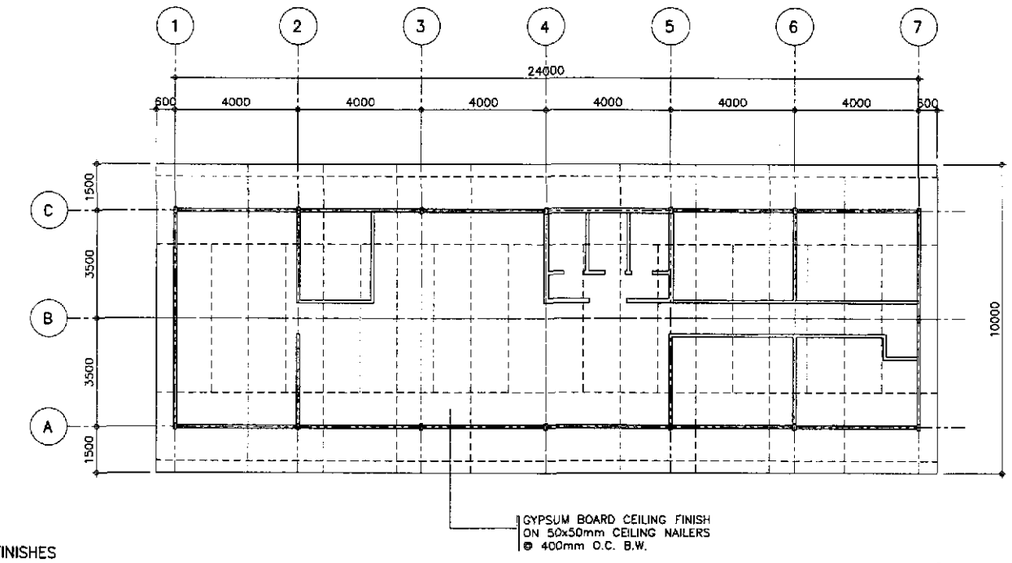

6 FA-03 REFLECTED CEILING PLAN
SCALE 1:100

ARNEL P. GONZALES
ENGINEER
PTR. NO. 5846340 P.R.C. NO. 53457
ISSUED ON 04/26/2002 T.I.N. 138-062-682
ISSUED AT SAN JUAN,M.M.

JICA
JAPAN INTERNATIONAL COOPERATION AGENCY
KATAHIRA & ENGINEERS INTERNATIONAL
YACHIYO ENGINEERING CO., LTD.

	DATE	SIGNATURE
DESIGNED	9/21/02	A. P. GONZALES
CHECKED	9/23/02	A. P. GONZALES
SUBMITTED	10/1/02	M. Kinoshita (TEAM LEADER)

REPUBLIC OF THE PHILIPPINES
DEPARTMENT OF PUBLIC WORKS AND HIGHWAYS

PJHL - PMO	BUREAU OF DESIGN		OFFICE OF THE SECRETARY	
Submitted By:	Reviewed By:	Recommended By:	Recommended By: (See cover sheet for Signature)	Approved By: (See cover sheet for Signature/Approval)
DANILO C. TRAJANO	EMMANUEL P. CUNTAPAY	GILBERTO S. REYES	MANUEL M. BONDAN	SIMEON A. DATUMANONG
Project Director	Chief, Architectural Division	OIC, Director IV	Undersecretary	Secretary

PROJECT AND LOCATION :
THE DETAILED DESIGN STUDY ON UPGRADING INTER-URBAN HIGHWAY SYSTEM ALONG THE PAN-PHILIPPINE HIGHWAY (Plaridel, Cabanatuan and San Jose Bypasses)
PLARIDEL BYPASS - CONTRACT PACKAGE III

SCALE : AS SHOWN
FULL SIZE A1

SHEET CONTENTS :
ENGINEER'S LIVING QUARTERS
FLOOR PLAN, ELEVATIONS, CROSS-SECTION AND REFLECTED CEILING PLAN

SHEET NO. : FA-03

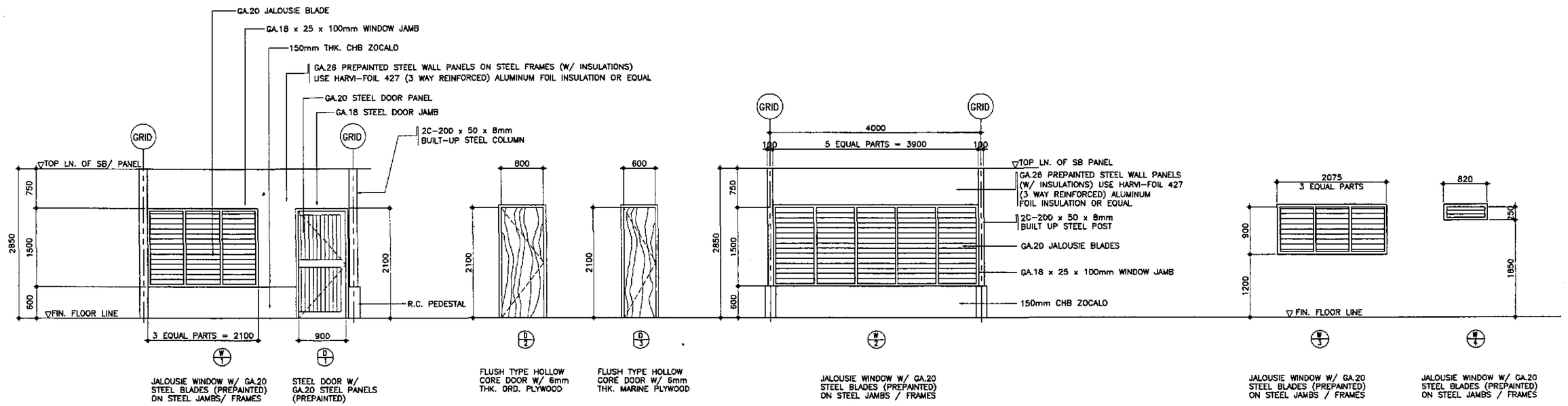

3 / FA-04 — FOR ENGINEER'S FIELD OFFICE
SCHEDULE OF DOORS & WINDOWS
SCALE 1:40

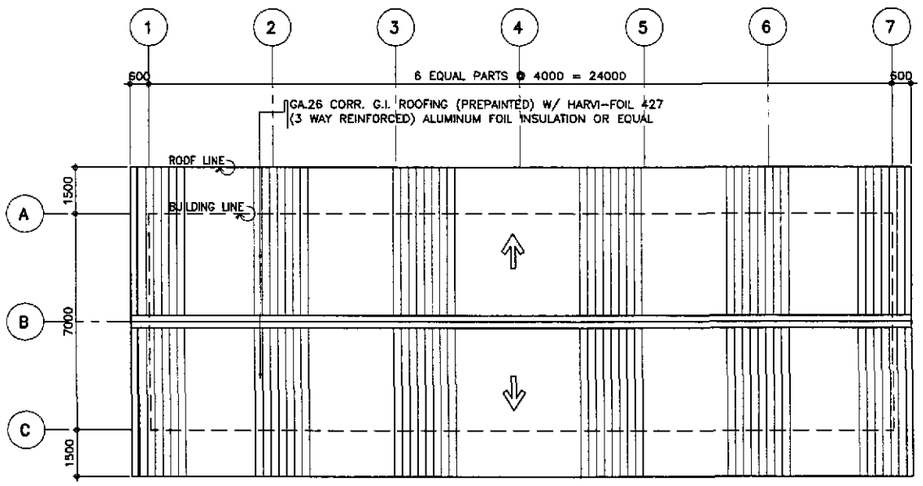

1 / FA-04 — ROOF PLAN
SCALE 1:100

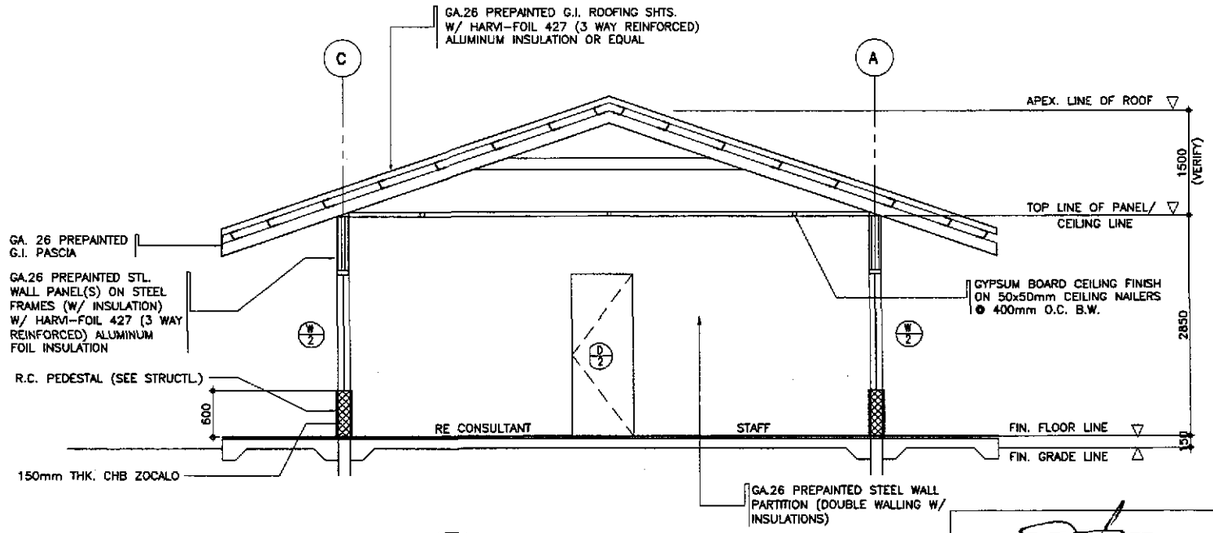

2 / FA-04 — DETAIL CROSS SECTION
SCALE 1:40

ARNEL P. GONZALES
ENGINEER
PTR. NO. 5846340 P.R.C. NO. 53457
ISSUED ON 04/26/2002 T.I.N. 138-062-682
ISSUED AT SAN JUAN,M.M.

JICA
JAPAN INTERNATIONAL COOPERATION AGENCY
KEI KATAHIRA & ENGINEERS INTERNATIONAL
YEC YACHIYO ENGINEERING CO., LTD.

	DATE	SIGNATURE
DESIGNED	9/21/02	A. P. GONZALES
CHECKED	9/23/02	P. GONZALES
SUBMITTED	10/11/02	M. KUDO TEAM LEADER

REPUBLIC OF THE PHILIPPINES
DEPARTMENT OF PUBLIC WORKS AND HIGHWAYS

PUHL - PMO	BUREAU OF DESIGN		OFFICE OF THE SECRETARY	
Submitted By:	Reviewed By:	Recommended By:	Recommended By: (See cover sheet for Signature)	Approved By: (See cover sheet for Signature/Approval)
DANILO C. TRAJANO	EMMANUEL P. CUNTAPAY	GILBERTO S. REYES	MANUEL M. BONDAN	SIMEON A. DATUMANONG
Project Director	Chief, Architectural Division	OIC, Director IV	Undersecretary	Secretary

PROJECT AND LOCATION :
THE DETAILED DESIGN STUDY ON UPGRADING INTER-URBAN HIGHWAY SYSTEM ALONG THE PAN-PHILIPPINE HIGHWAY (Plaridel, Cabanatuan and San Jose Bypasses)
PLARIDEL BYPASS - CONTRACT PACKAGE III

SCALE : AS SHOWN
FULL SIZE A1

SHEET CONTENTS :
ENGR'S FIELD OFFICE / LABORATORY
ROOF PLAN, CROSS-SECTION AND SCHEDULE OF DOORS & WINDOWS

SHEET NO. : FA-04

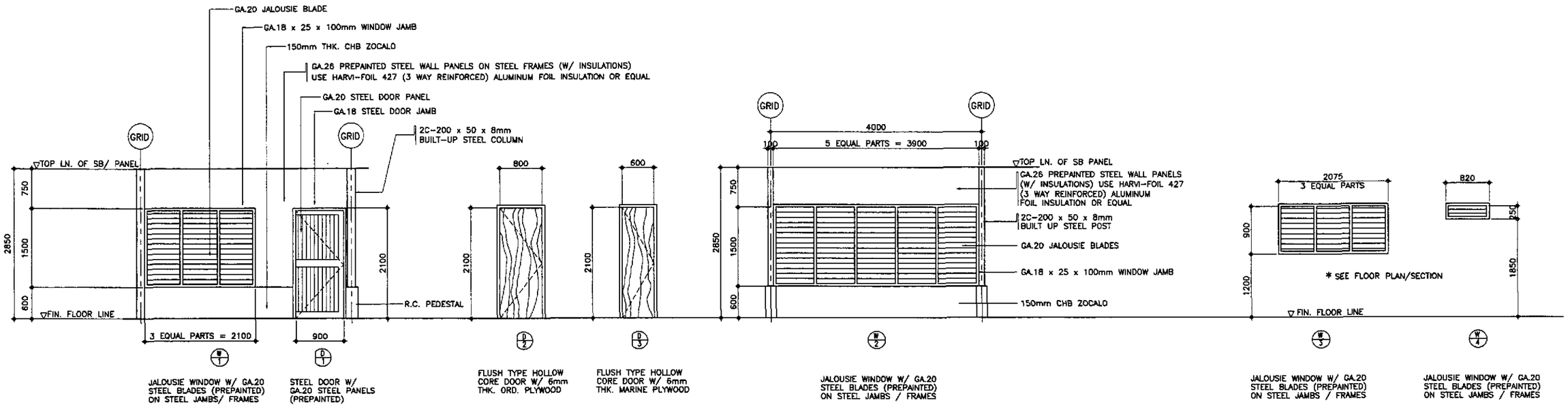

3 / FA-05 — FOR ENGINEER'S LIVING QUARTERS
SCHEDULE OF DOORS & WINDOWS
SCALE 1:40

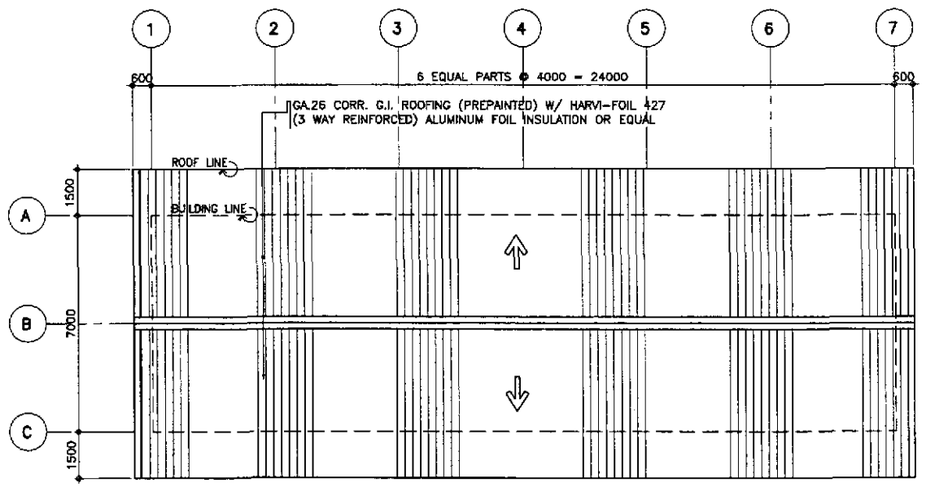

1 / FA-05 — ## ROOF PLAN
SCALE 1:100

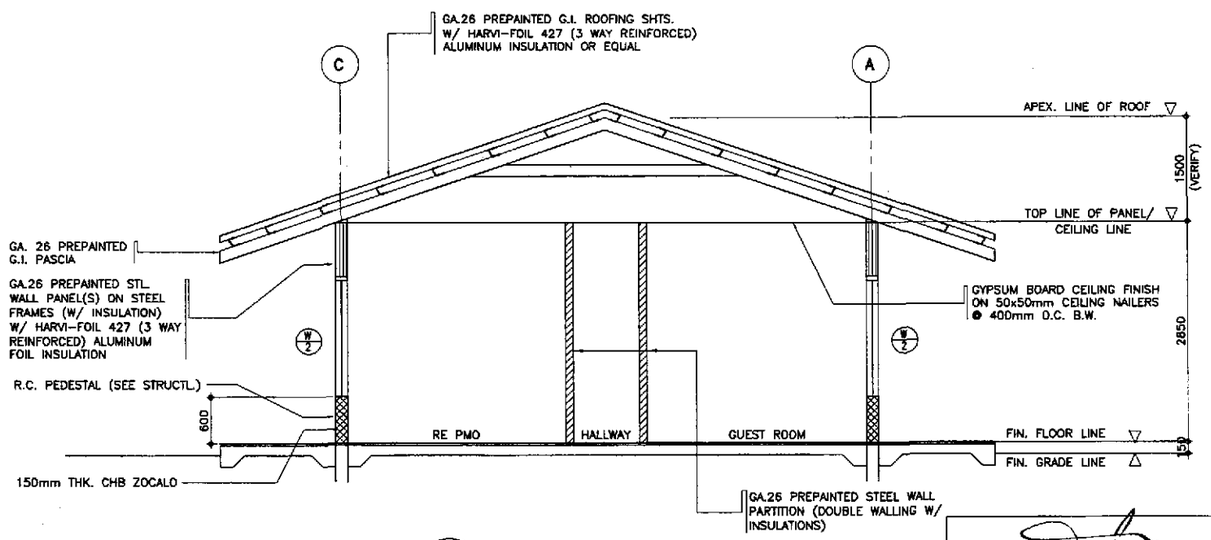

2 / FA-05 — ## DETAIL CROSS SECTION
SCALE 1:40

ARNEL P. GONZALES
ENGINEER
PTR. NO. 5846390 P.R.C. NO. 53457
ISSUED ON 04/26/2002 T.I.N. 138-062-682
ISSUED AT SAN JUAN,M.M.

JICA — JAPAN INTERNATIONAL COOPERATION AGENCY
KEI KATAHIRA & ENGINEERS INTERNATIONAL — YEC YACHIYO ENGINEERING CO., LTD.

	DATE	SIGNATURE
DESIGNED	9/1/02	A. P. GONZALES
CHECKED	9/1/02	A. P. GONZALES
SUBMITTED	10/1/02	TEAM LEADER

REPUBLIC OF THE PHILIPPINES
DEPARTMENT OF PUBLIC WORKS AND HIGHWAYS

P.MH - PMO	BUREAU OF DESIGN		OFFICE OF THE SECRETARY	
Submitted By:	Reviewed By:	Recommended By:	Recommended By: (See cover sheet for Signature)	Approved By: (See cover sheet for Signature/Approval)
DANILO C. TRAJANO	EMMANUEL P. CUNTAPAY	GILBERTO S. REYES	MANUEL M. BONOAN	SIMEON A. DATUMANONG
Project Director	Chief, Architectural Division	OIC, Director IV	Undersecretary	Secretary

PROJECT AND LOCATION :
THE DETAILED DESIGN STUDY ON UPGRADING INTER-URBAN HIGHWAY SYSTEM ALONG THE PAN-PHILIPPINE HIGHWAY (Plaridel, Cabanatuan and San Jose Bypasses)
PLARIDEL BYPASS - CONTRACT PACKAGE III

SCALE : AS SHOWN — FULL SIZE A1

SHEET CONTENTS : ENGINEER'S LIVING QUARTERS — ROOF PLAN, CROSS-SECTION AND SCHEDULE OF DOORS & WINDOWS

SHEET NO. : FA-05

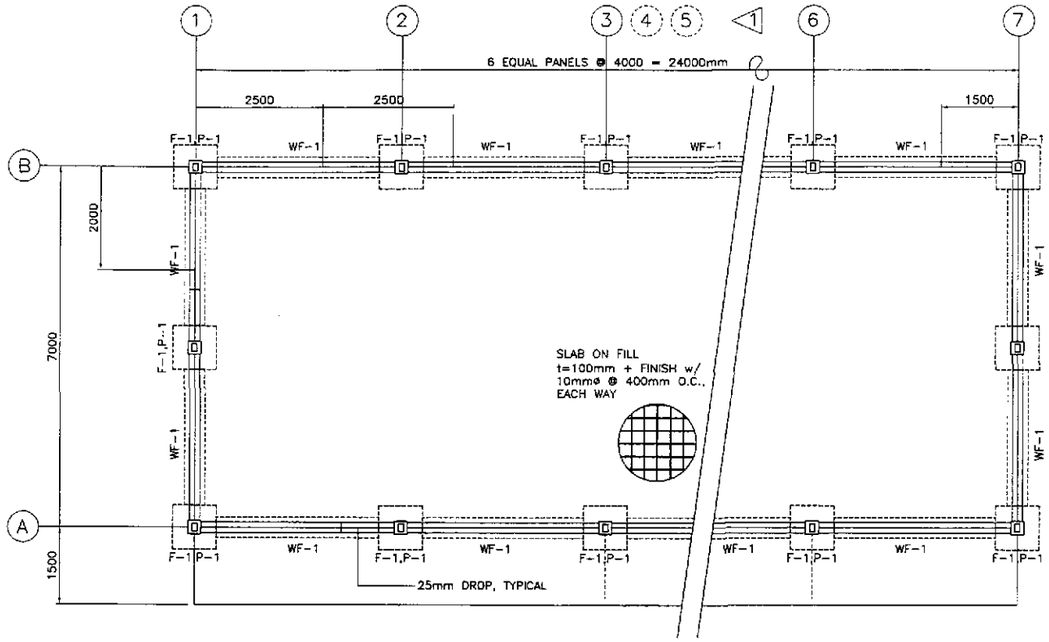

1 FA-06 FOUNDATION PLAN
SCALE 1:25

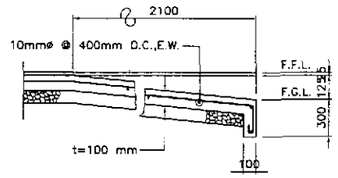

4 FA-06 R.C. RAMP DETAIL
SCALE 1:25

DESIGN CRITERIA :

I. LIVE LOAD

ROOF	0.58 KPa
OFFICE/LABORATORY	2.40 KPa

II. DEAD LOAD

CONCRETE	24 KN/m^3
STEEL	76.10 KN/m^3
CHB	2.73 KPa

III. WIND LOAD

$p = Ce\ Cq\ Qs\ I$

WHERE :

p = ACTUAL WIND PRESSURE
Ce = GUST FACTOR COEFFICIENT (EXPOSURE B=0.63)
Cq = PRESSURE COEFFICIENT
Qs = 1.50 KPa FOR ZONE 2&3, Qs=1.92 FOR ZONE 1
I = OCCUPANCY IMPORTANCE = 1.00

IV. ALLOWABLE STRESSES

1. CONCRETE (ALLOWABLE COMPRESSIBLE STRENGTH @ 28 DAYS)
   a.) FOR FOOTINGS AND PEDESTAL COLUMN
   fc' = 20.70 mpa fc = 9.31mpa
   b.) FOR SLAB ON FILL
   fc' = 17.26 mpa fc = 7.76mpa
2. REINFORCING STEEL BARS (STRUCTURAL GRADE 33 DEFORMED BARS)
   fy = 227.0 mpa fst = 124.02 mpa
3. STRUCTURAL LIGHT GAGE COLD FORMED STEEL
   STIFFENED LIGHT GAGE CHANNEL FOR RAFTERS, STUD & WALLS
   fs = 124.0 mpa (18,000 psi)
4. STRUCTURAL BUILT-UP STEEL PLATES (ASTM A-36)
   FOR STEEL BOX COLUMN
   fy = 248.0 mpa (36,000 psi)
5. WELDS
   USE E-60 XX ELECTRODES
   fv = 93.76 mpa
6. BOLTS (ASTM A-307)
   fv = 69 mpa fst = 98.60 mpa
7. CONCRETE MASONRY UNITS (NON-LOAD BEARING CHB)
   fm' = 3.41 mpa (500 psi)
8. ASSUMED ALLOWABLE SOIL BEARING CAPACITY OF 95.76 KPa (2,000 psf)

NOTES ON FOUNDATION :

1. IN CASE THE ACTUAL SOIL BEARING PRESSURE IS FOUND LESS THAN THE ASSUMED VALUE OF 95.76 KPa, NOTIFY THE DIRECTOR, BUREAU OF DESIGN FOR PROPER REVISION OF FOOTINGS.
2. NO FOOTINGS SHALL REST ON FILL.

MATERIAL SPECIFICATIONS :

1. FOR ROOFING SHEETS :
   0.6mm THICK (GA.26) PREPAINTED CORRUGATED G.I. ROOFING SHEET, LONG SPAN.
2. FOR WALLING SHEETS : USE ALUMINUM FOIL INSULATION HARVI-FOIL 427 (3-WAY REINFORCED OR EQUAL). DOUBLE WALL 0.6mm THICK (GA.26) HIGH TENSILE STEEL SHEET WALLING/ CLADDING W/ ALUMINUM FOIL FOR INSULATION. HARVI-FOIL 427 (3-WAY REINFORCED OR EQUAL). BASE STEEL WITH 550 MPa YIELD STRESS.
3. THE VERTICAL AND HORIZONTAL STUDS AND RAFTERS SHALL CONFORM WITH THE AMERICAN IRON AND STEEL INSTITUTE (AISI), SPECIFICATION OF LIGHT GAGE COLD-FORMED STEEL STRUCTURAL MEMBERS AS PER ASTM A246-LIGHT GAGE STRUCTURAL QUALITY FLAT ROLLED CARBON STEEL SHEET.
4. ALL METAL PARTS SHALL BE GIVEN TWO(2) COATS OF ANTI-CORROSIVE PAINT OF APPROVED QUALITY WITH A MINIMUM TOTAL THICKNESS OF 3mm. FINISHING PAINT SHALL BE 2-COATS OF GLOSS OF APPROVED QUALITY, WEATHER RESISTANT AND OF THE SAME COLOR AS THE PREPAINTED SHEETINGS. BASE OF SIDINGS AND DOOR AND WINDOW JAMBS SHALL BE GIVEN ANOTHER TWO COATS OF BROWN OR MAHOGANY COLORED ENAMEL PAINT.

NOTES :

1. ALL LOCATION OF ANCHOR BOLTS AND BOLT HOLES SHALL BE VERIFIED ON THE SITE PRIOR TO INSTALLATION / ASSEMBLY.
2. HOLES FOR ALL BOLTS SHALL BE 1.6mm LARGER IN DIAMETER THAN BOLTS. BOLTS SHALL BE FITTED WITH STANDARD NUTS AND WASHERS TO ENSURE TIGHT FIT.
3. THE STEEL MANUFACTURER / FABRICATOR / CONTRACTOR SHALL SUBMIT SHOP / FABRICATION DRAWINGS TO INCLUDE MATERIAL SCHEDULES, ASSEMBLY PROCEDURE, CONNECTIONS AND SPLICES AS PER APPROVED PLANS FOR REVIEW AND APPROVAL OF THE DIRECTOR, BUREAU OF DESIGN.

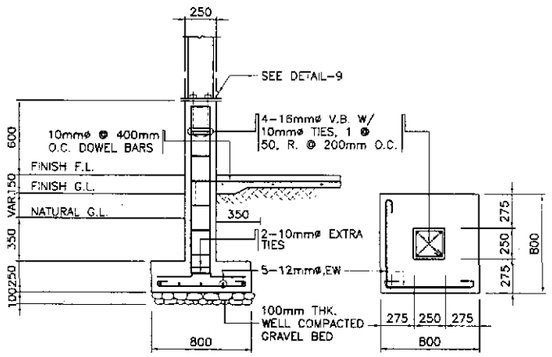

ELEVATION PLAN

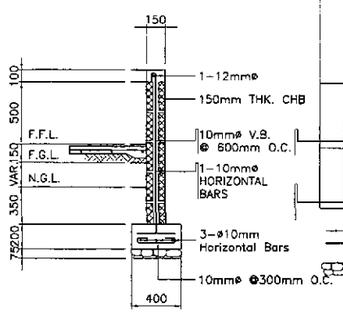

SECTION A

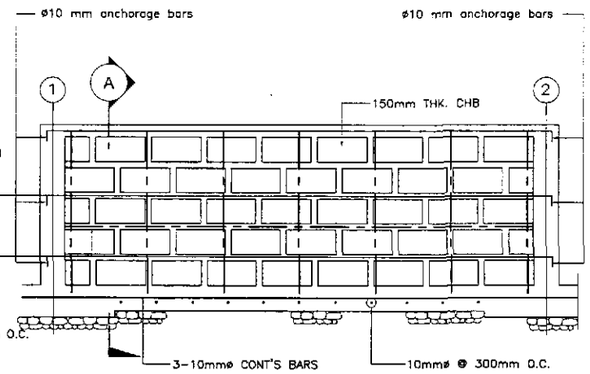

TYP. ELEVATION

2 FA-06 F-1, P-1
SCALE 1:25

3 FA-06 WF - 1
SCALE 1:25

ARNEL P. GONZALES
ENGINEER

PTR. NO. 5846340 P.R.C. NO. 53457
ISSUED ON 04/26/2002 T.I.N. 138-062-682
ISSUED AT SAN JUAN,M.M.

JICA
JAPAN INTERNATIONAL COOPERATION AGENCY
KATAHIRA & ENGINEERS INTERNATIONAL
YACHIYO ENGINEERING CO., LTD.

	DATE	SIGNATURE
DESIGNED	9/21/02	A. P. GONZALES
CHECKED	9/23/02	A. P. GONZALES
SUBMITTED	9/24/02	TEAM LEADER

REPUBLIC OF THE PHILIPPINES
DEPARTMENT OF PUBLIC WORKS AND HIGHWAYS

PJHL - PMO	BUREAU OF DESIGN		OFFICE OF THE SECRETARY	
Submitted By:	Reviewed By:	Recommended By:	Recommended By: (See cover sheet for Signature)	Approved By: (See cover sheet for Signature/Approval)
DANILO C. TRAJANO	WILFREDO S. LOPEZ	GILBERTO S. REYES	MANUEL M. BONDAN	SIMEON A. DATUMANONG
Project Director	Chief, Structural Division	DIC, Director IV	Undersecretary	Secretary

PROJECT AND LOCATION :
THE DETAILED DESIGN STUDY ON UPGRADING INTER-URBAN HIGHWAY SYSTEM ALONG THE PAN-PHILIPPINE HIGHWAY (Plaridel, Cabanatuan and San Jose Bypasses)
PLARIDEL BYPASS - CONTRACT PACKAGE III

SCALE :
AS SHOWN
FULL SIZE A1

SHEET CONTENTS :
ENGINEER'S FIELD OFFICE AND LIVING QUARTERS
FOUNDATION PLAN, R.C. RAMP, DETAILS OF F1, P-1 & WF1 AND DESIGN CRITERIA

SHEET NO. :
FA-06

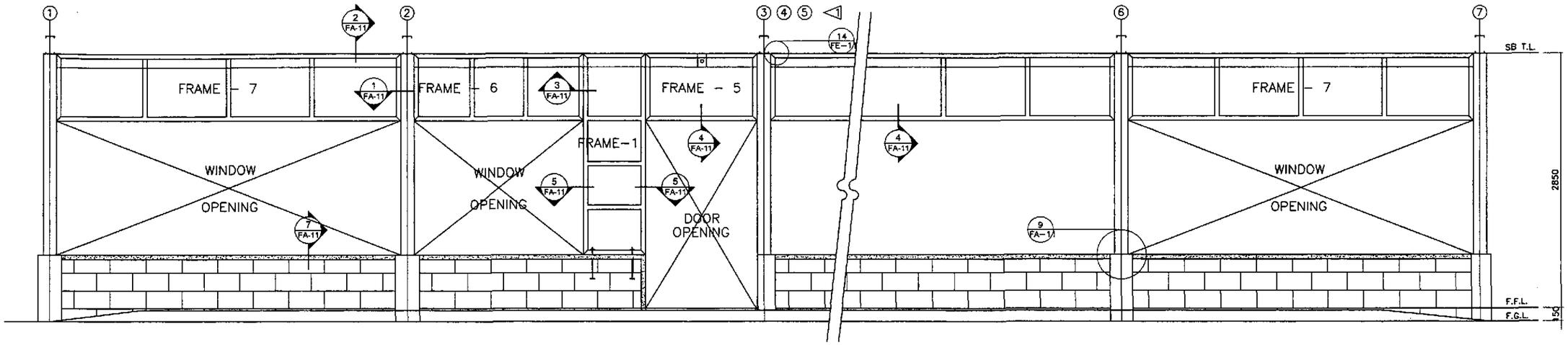

2 FA-07 FRONT ELEVATION
SCALE 1:25

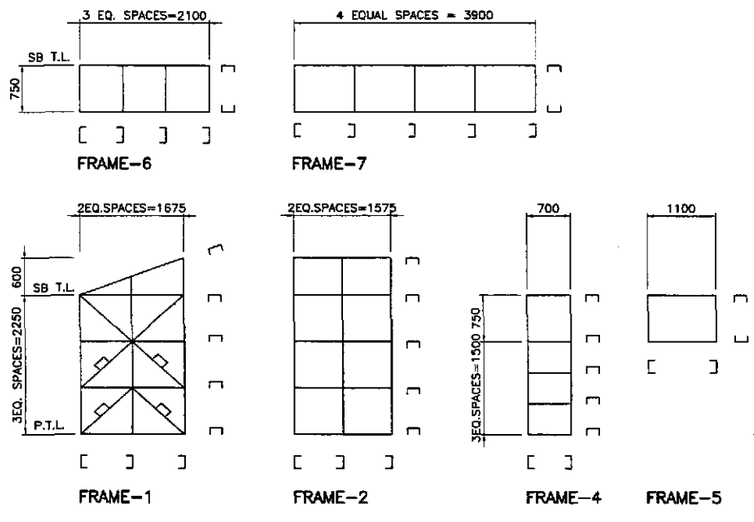

1 FA-07 FRAMES SCHEMATIC DIAGRAMS
SCALE 1:50

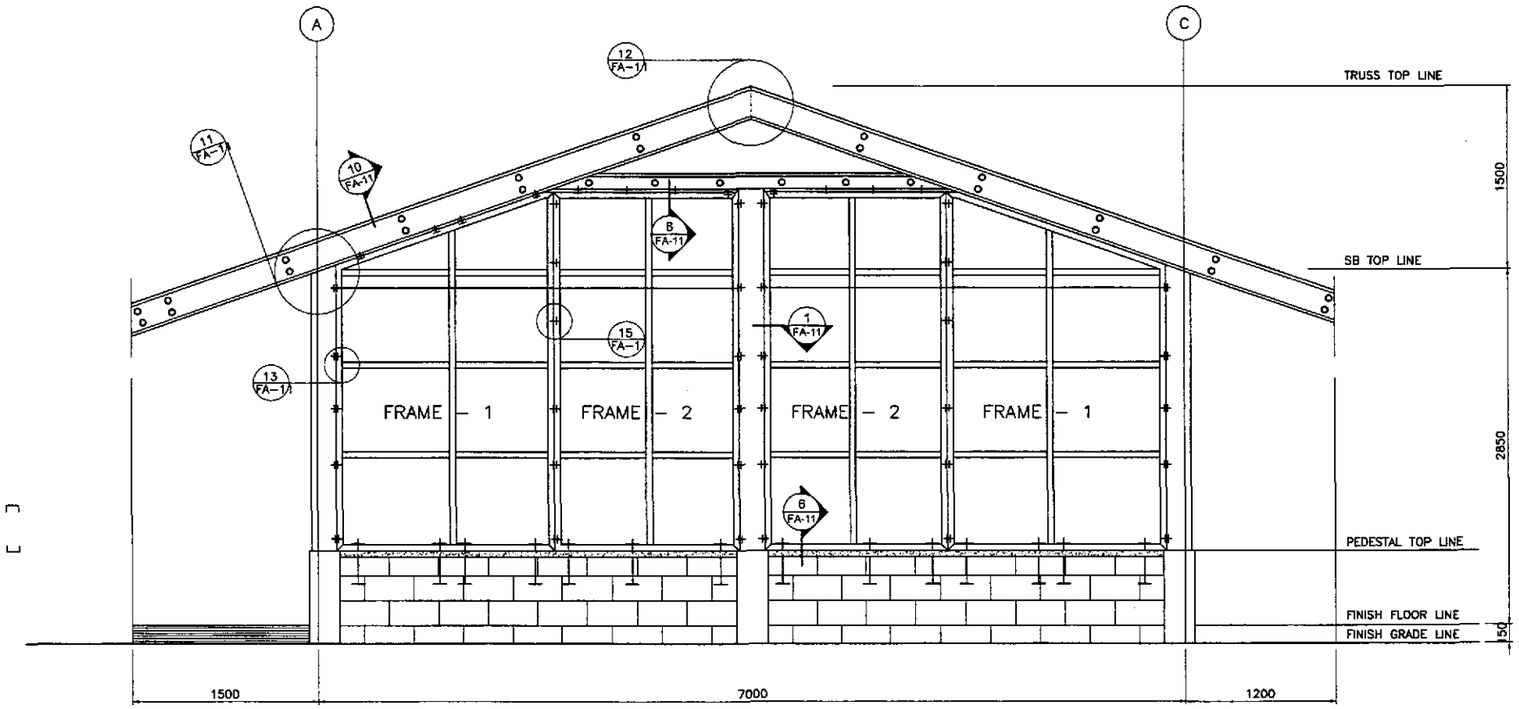

3 FA-07 RIGHT SIDE ELEVATION
SCALE 1:25

ARNEL P. GONZALES
ENGINEER

PTR. NO. 5846340 P.R.C. NO. 53457
ISSUED ON 04/26/2002 T.I.N. 138-062-682
ISSUED AT SAN JUAN,M.M.

JICA
JAPAN INTERNATIONAL COOPERATION AGENCY
KEI KATAHIRA & ENGINEERS INTERNATIONAL
YEC YACHIYO ENGINEERING CO., LTD.

	DATE	SIGNATURE
DESIGNED	9/23/04	P. GONZALES
CHECKED	9/23/04	P. GONZALES
SUBMITTED	10/19/04	TEAM LEADER

REPUBLIC OF THE PHILIPPINES
DEPARTMENT OF PUBLIC WORKS AND HIGHWAYS

PJHL – PMO	BUREAU OF DESIGN		OFFICE OF THE SECRETARY	
Submitted By:	Reviewed By:	Recommended By:	Recommended By: (See cover sheet for Signature)	Approved By: (See cover sheet for Signature/Approval)
DANILO C. TRAJANO	WILFREDO S. LOPEZ	GILBERTO S. REYES	MANUEL M. BONDAN	SIMEON A. DATUMANONG
Project Director	Chief, Structural Division	OIC, Director IV	Undersecretary	Secretary

PROJECT AND LOCATION :
THE DETAILED DESIGN STUDY ON UPGRADING INTER-URBAN HIGHWAY SYSTEM ALONG THE PAN-PHILIPPINE HIGHWAY (Plaridel, Cabanatuan and San Jose Bypasses)
PLARIDEL BYPASS - CONTRACT PACKAGE III

SCALE : AS SHOWN FULL SIZE A1

SHEET CONTENTS :
ENGR'S FIELD OFFICE / LABORATORY
FRONT AND RIGHT SIDE ELEVATION OF STEEL STUD FRAMES & SCHEMATIC DIAGRAM

SHEET NO. : FA-07

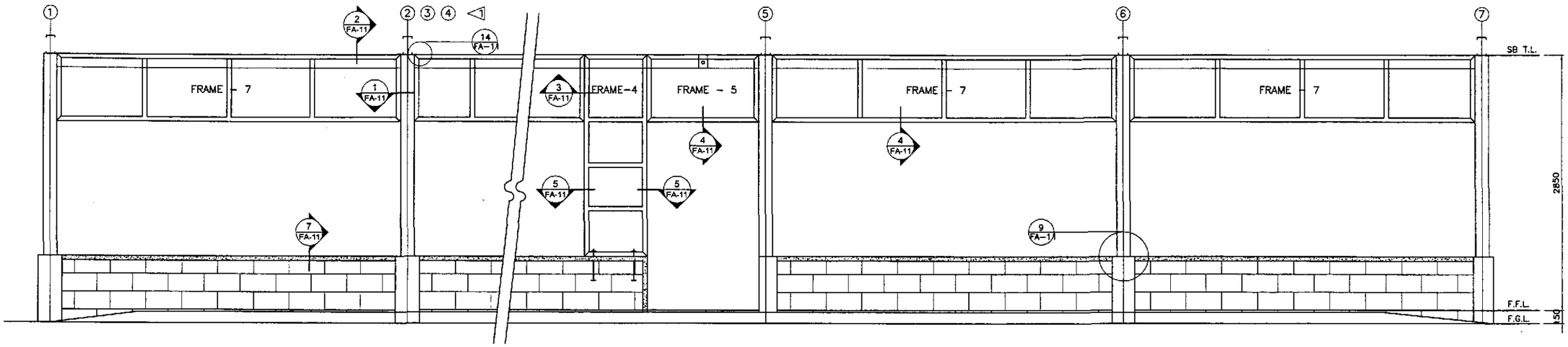

2 FA-08 **FRONT ELEVATION**
SCALE 1:25

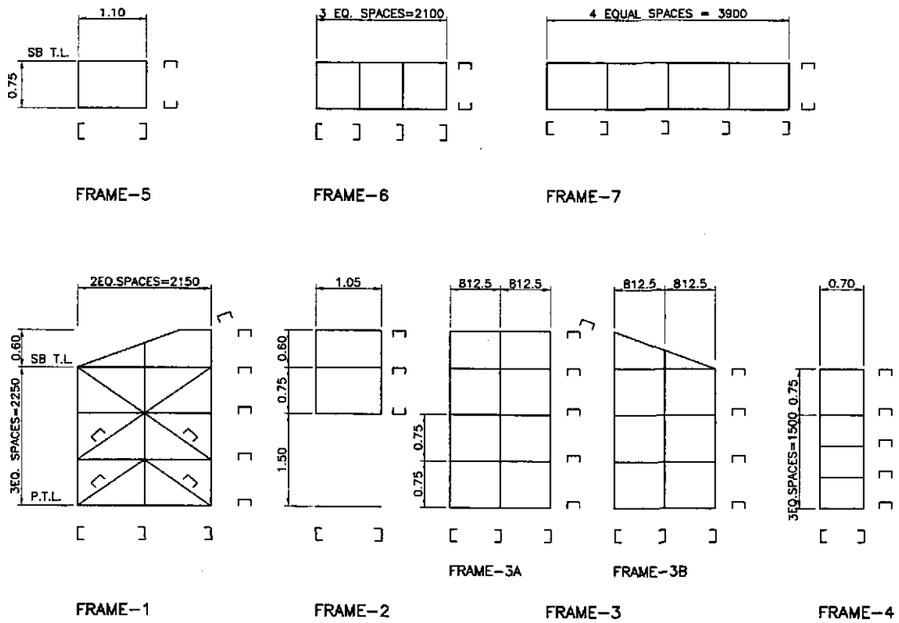

1 FA-08 **FRAMES SCHEMATIC DIAGRAMS**
SCALE 1:50

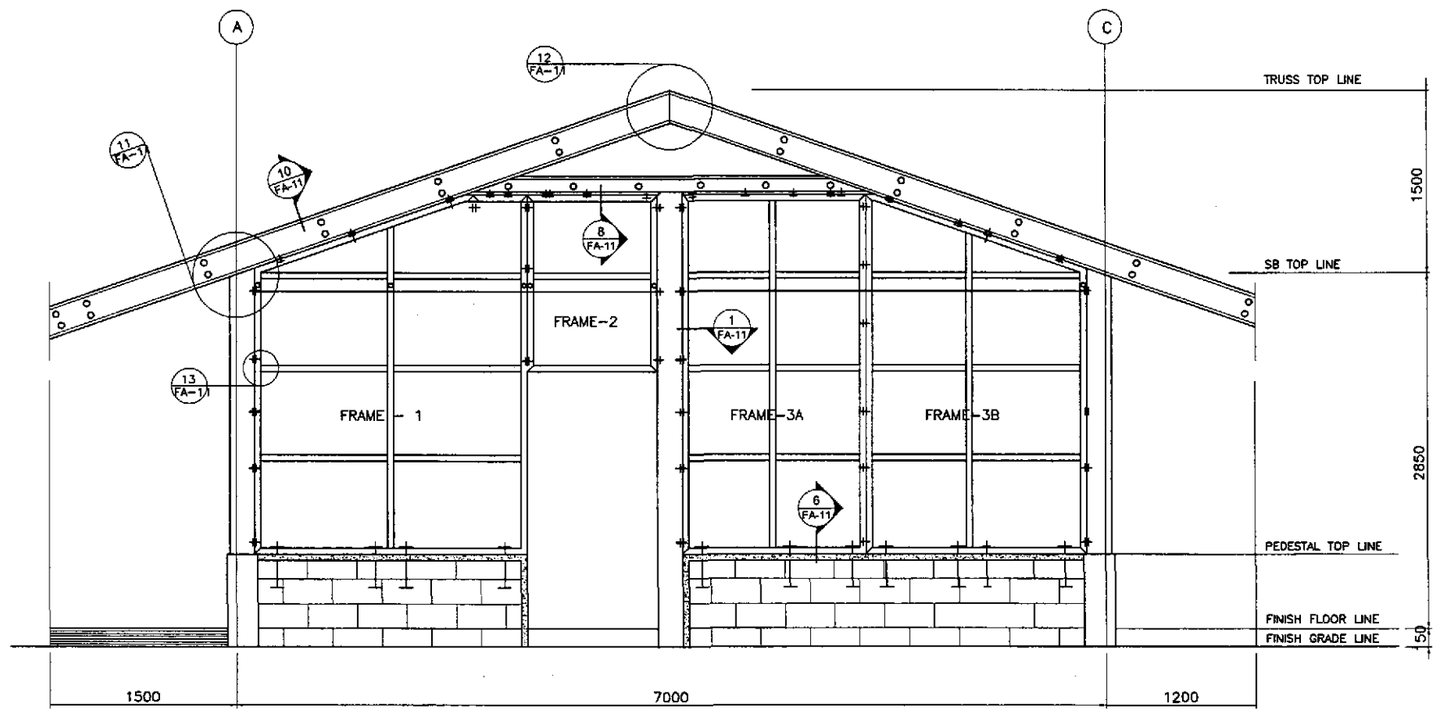

3 FA-08 **RIGHT SIDE ELEVATION**
SCALE 1:25

ARNEL P. GONZALES
ENGINEER

PTR. NO. 5846340 P.R.C. NO. 53457
ISSUED ON 04/26/2002 T.I.N. 138-062-682
ISSUED AT SAN JUAN,M.M.

JICA
JAPAN INTERNATIONAL COOPERATION AGENCY
KEI KATAHIRA & ENGINEERS INTERNATIONAL
YEO YACHIYO ENGINEERING CO., LTD.

	DATE	SIGNATURE
DESIGNED	9/2/02	P. GONZALES
CHECKED	9/13/02	P. GONZALES
SUBMITTED	10/1/02	TEAM LEADER

REPUBLIC OF THE PHILIPPINES
DEPARTMENT OF PUBLIC WORKS AND HIGHWAYS

PJHL - PMO	BUREAU OF DESIGN		OFFICE OF THE SECRETARY	
Submitted By:	Reviewed By:	Recommended By:	Recommended By: (See cover sheet for Signature)	Approved By: (See cover sheet for Signature/Approval)
DANILO C. TRAJANO	WILFREDO S. LOPEZ	GILBERTO S. REYES	MANUEL M. BONOAN	SIMEON A. DATUMANONG
Project Director	Chief, Structural Division	OIC, Director IV	Undersecretary	Secretary

PROJECT AND LOCATION :
THE DETAILED DESIGN STUDY ON UPGRADING INTER-URBAN HIGHWAY SYSTEM ALONG THE PAN-PHILIPPINE HIGHWAY (Plaridel, Cabanatuan and San Jose Bypasses)
PLARIDEL BYPASS - CONTRACT PACKAGE III

SCALE : AS SHOWN FULL SIZE A1

SHEET CONTENTS : ENGINEER'S LIVING QUARTERS
FRONT AND RIGHT SIDE ELEVATION OF STEEL STUD FRAMES & SCHEMATIC DIAGRAM

SHEET NO. : FA-08

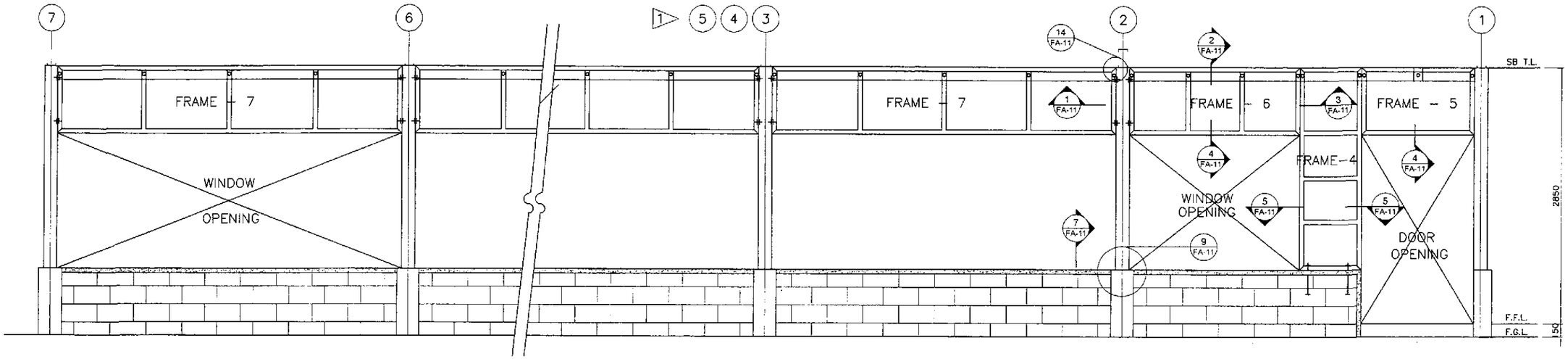

2 FA-09 **REAR ELEVATION**
SCALE 1:25

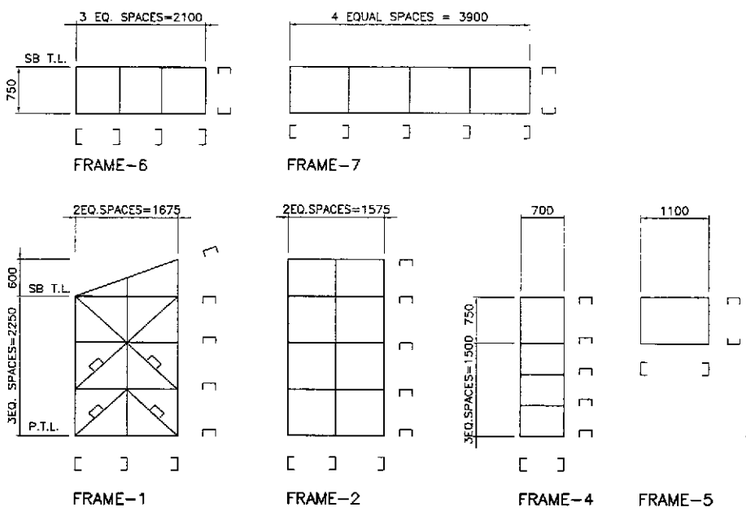

1 FA-09 **FRAMES SCHEMATIC DIAGRAMS**
SCALE 1:50

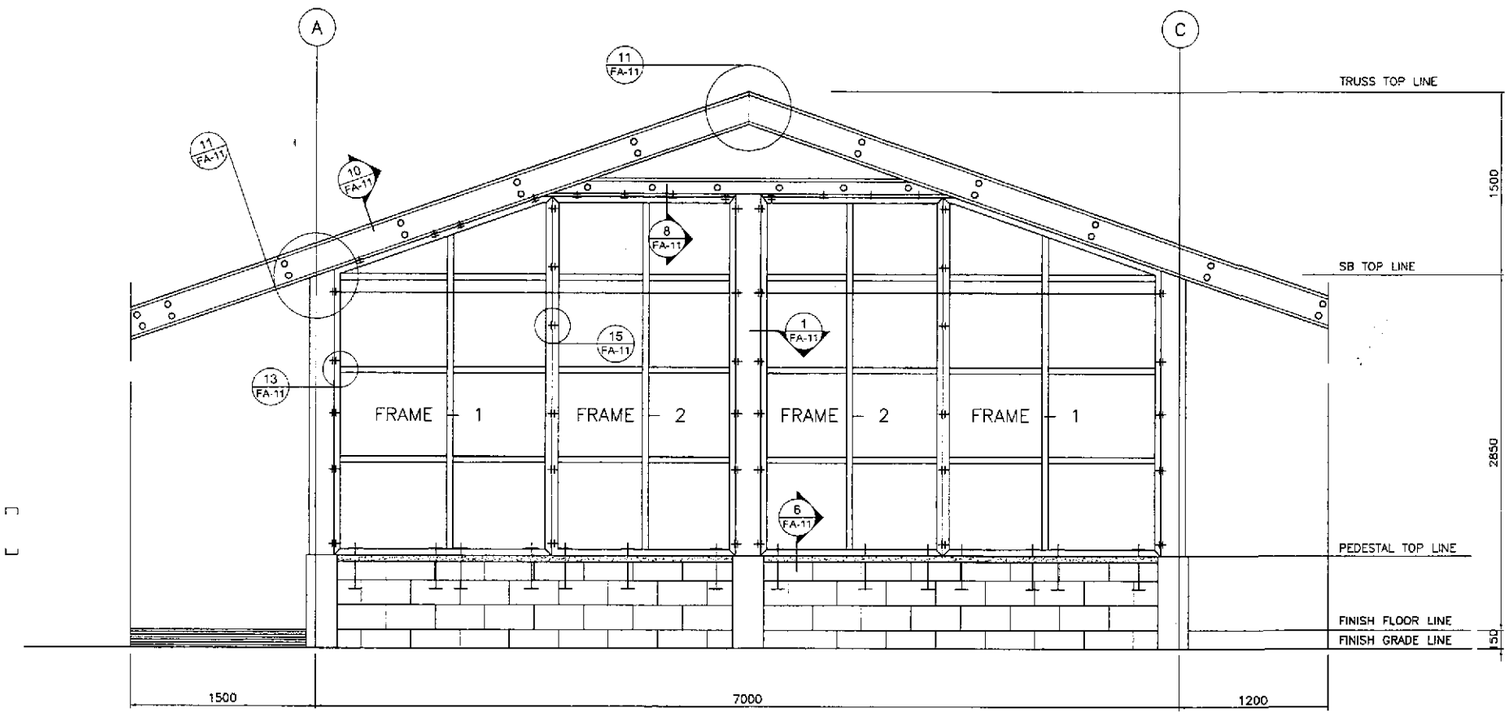

3 FA-09 **LEFT SIDE ELEVATION**
SCALE 1:25

ARNEL P. GONZALES
ENGINEER

PTR. NO. 5846340 P.R.C. NO. 53457
ISSUED ON 04/26/2002 T.I.N. 138-062-682
ISSUED AT SAN JUAN,M.M.

JICA
JAPAN INTERNATIONAL COOPERATION AGENCY
KEI KATAHIRA & ENGINEERS INTERNATIONAL
YEC YACHIYO ENGINEERING CO., LTD.

	DATE	SIGNATURE
DESIGNED	9/21/02	A. P. GONZALES
CHECKED	9/23/02	A. P. GONZALES
SUBMITTED	10/4/02	M. Kuroda TEAM LEADER

REPUBLIC OF THE PHILIPPINES
DEPARTMENT OF PUBLIC WORKS AND HIGHWAYS

PJHL – PMO	BUREAU OF DESIGN		OFFICE OF THE SECRETARY	
Submitted By:	Reviewed By:	Recommended By:	Recommended By: (See cover sheet for Signature)	Approved By: (See cover sheet for Signature/Approval)
DANILO C. TRAJANO	WILFREDO S. LOPEZ	GILBERTO S. REYES	MANUEL M. BONOAN	SIMEON A. DATUMANONG
Project Director	Chief, Structural Division	OIC, Director IV	Undersecretary	Secretary

PROJECT AND LOCATION :
THE DETAILED DESIGN STUDY ON UPGRADING INTER-URBAN HIGHWAY SYSTEM ALONG THE PAN-PHILIPPINE HIGHWAY (Plaridel, Cabanatuan and San Jose Bypasses)
PLARIDEL BYPASS - CONTRACT PACKAGE III

SCALE : AS SHOWN FULL SIZE A1

SHEET CONTENTS :
ENGR'S FIELD OFFICE / LABORATORY
REAR AND LEFT SIDE ELEVATION OF STEEL STUD FRAMES & SCHEMATIC DIAGRAM

SHEET NO. : FA-09

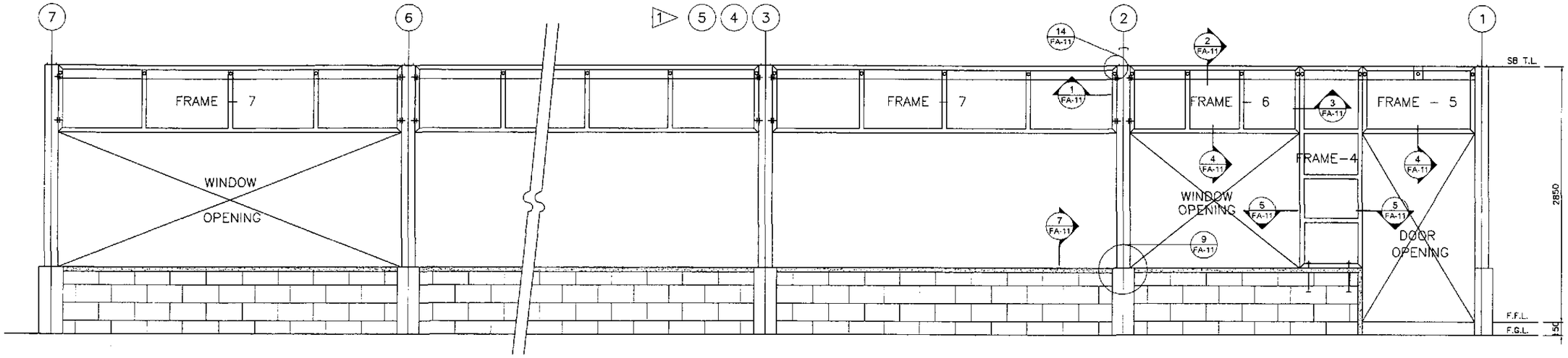

2 FA-10 REAR ELEVATION
SCALE 1:25

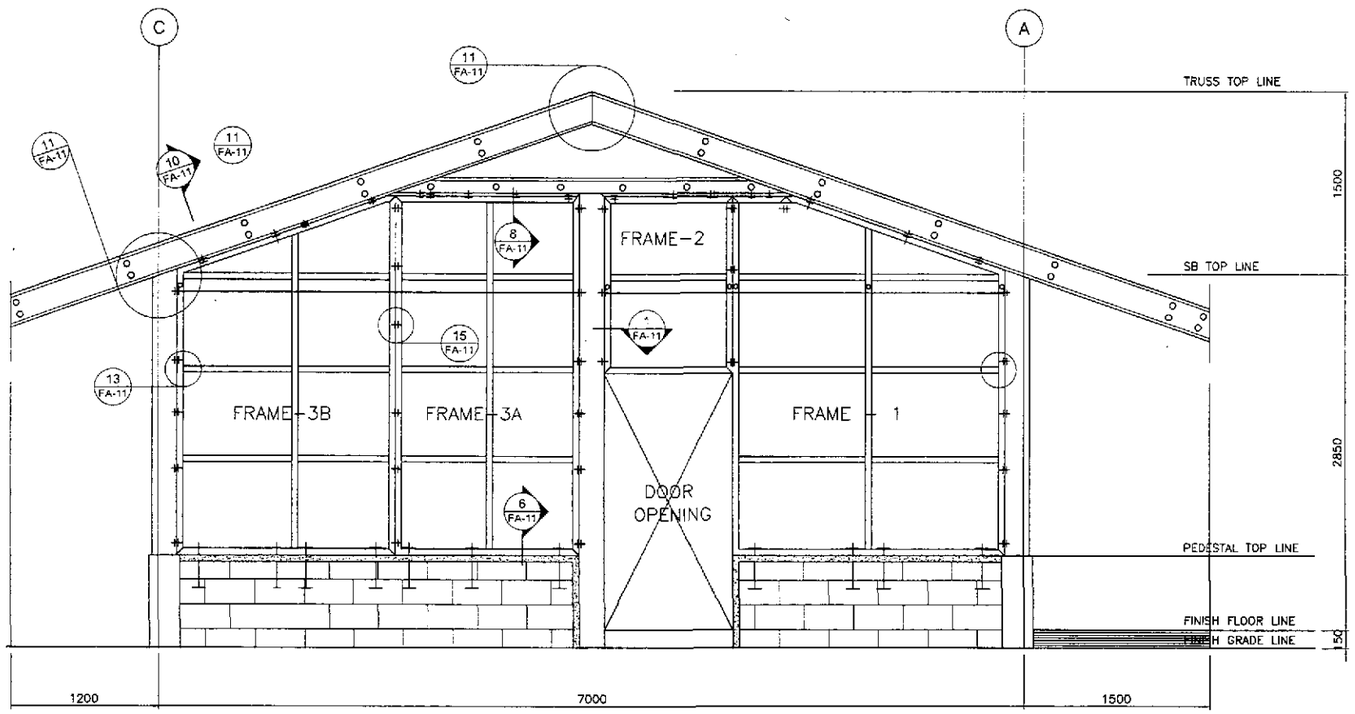

3 FA-10 LEFT SIDE ELEVATION
SCALE 1:25

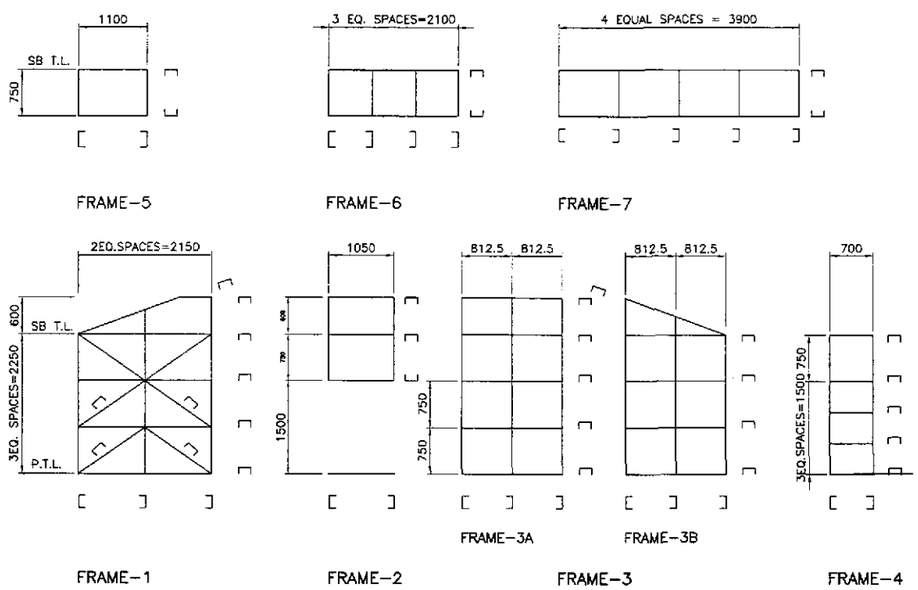

1 FA-10 FRAMES SCHEMATIC DIAGRAMS
SCALE 1:50

ARNEL P. GONZALES
ENGINEER

PTR. NO. 5846340 P.R.C. NO. 53457
ISSUED ON 04/25/2002 T.I.N. 138-062-582
ISSUED AT SAN JUAN,M.M.

JICA
JAPAN INTERNATIONAL COOPERATION AGENCY
KATAHIRA & ENGINEERS INTERNATIONAL
YACHIYO ENGINEERING CO., LTD.

	DATE	SIGNATURE
DESIGNED	9/21/02	P. GONZALES
CHECKED	9/23/02	P. GONZALES
SUBMITTED	10/4/02	TEAM LEADER

REPUBLIC OF THE PHILIPPINES
DEPARTMENT OF PUBLIC WORKS AND HIGHWAYS

PJHL – PMO	BUREAU OF DESIGN		OFFICE OF THE SECRETARY	
Submitted By:	Reviewed By:	Recommended By:	Recommended By: (See cover sheet for Signature)	Approved By: (See cover sheet for Signature/Approval)
DANILO C. TRAJANO	WILFREDO S. LOPEZ	GILBERTO S. REYES	MANUEL M. BONOAN	SIMEON A. DATUMANONG
Project Director	Chief, Structural Division	OIC, Director IV	Undersecretary	Secretary

PROJECT AND LOCATION :
THE DETAILED DESIGN STUDY ON UPGRADING INTER-URBAN HIGHWAY SYSTEM ALONG THE PAN-PHILIPPINE HIGHWAY (Plaridel, Cabanatuan and San Jose Bypasses)
PLARIDEL BYPASS - CONTRACT PACKAGE III

SCALE : AS SHOWN FULL SIZE A1

SHEET CONTENTS :
ENGINEER'S LIVING QUARTERS
REAR AND LEFT SIDE ELEVATION OF STEEL STUD FRAMES & SCHEMATIC DIAGRAMS

SHEET NO. : FA-10

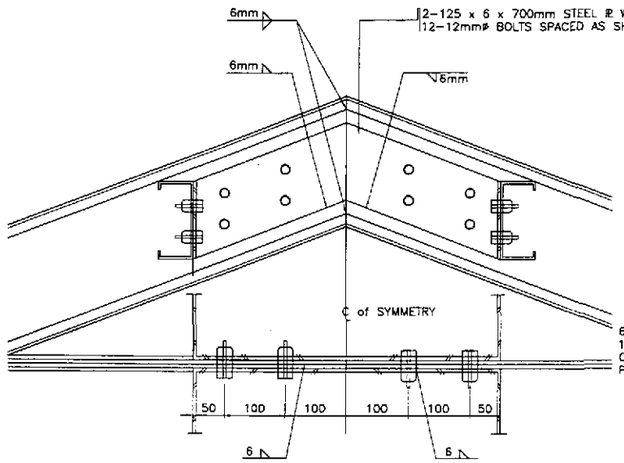

3 FA-11 DETAIL - 12
SCALE 1:5

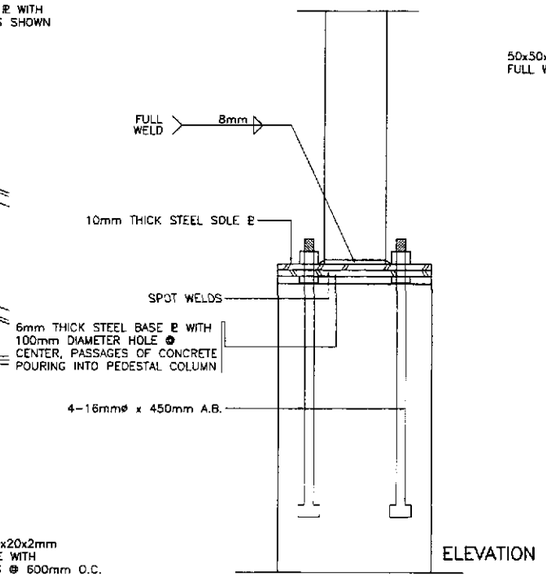

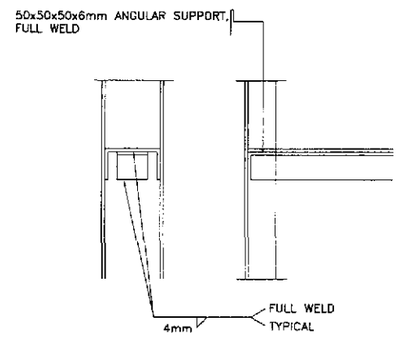

10 FA-11 DETAIL - 13
SCALE 1:5

NOTES :

1. ALL VERTICAL AND HORIZONTAL STUDS SHALL BE 100x50x2mm UNSTIFFENED FLANGED UNLESS OTHERWISE SPECIFIED.
2. HORIZONTAL STUDS MUST BE INSERTED TO AND WELDED IN THE VERTICAL STUDS UNLESS OTHERWISE SPECIFIED.
3. REVISION IN THE ATTACHMENT/ CONNECTIONS THAT WILL IMPROVE DESIGN MAYBE DONE W/ PRIOR APPROVAL OF FABRICATION DRAWINGS.

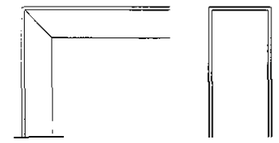

13 FA-11 DETAIL - 14
SCALE 1:5

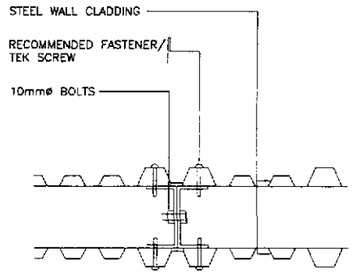

15 FA-11 DETAIL - 15
SCALE 1:5

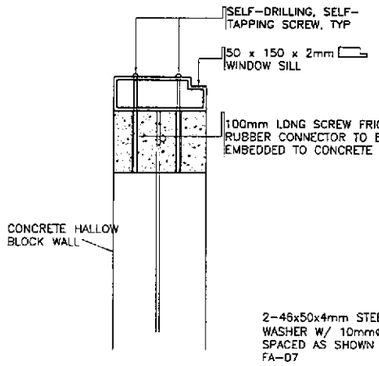

2 FA-11 DETAIL - 7
SCALE 1:5

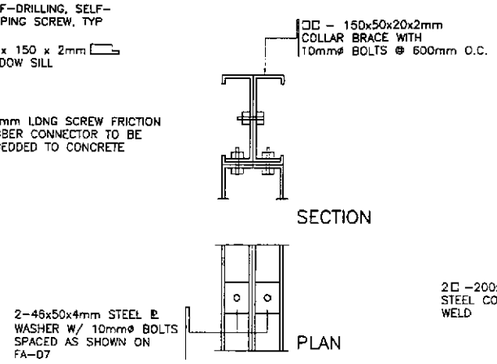

5 FA-11 DETAIL - 8
SCALE 1:5

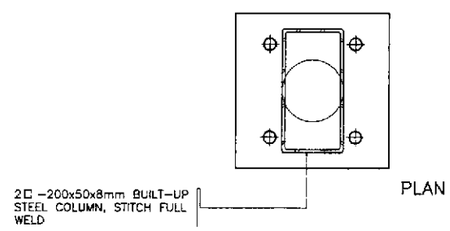

7 FA-11 DETAIL - 9
SCALE 1:5

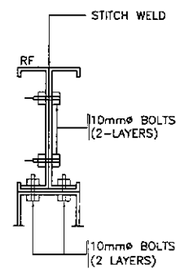

9 FA-11 DETAIL - 10
SCALE 1:5

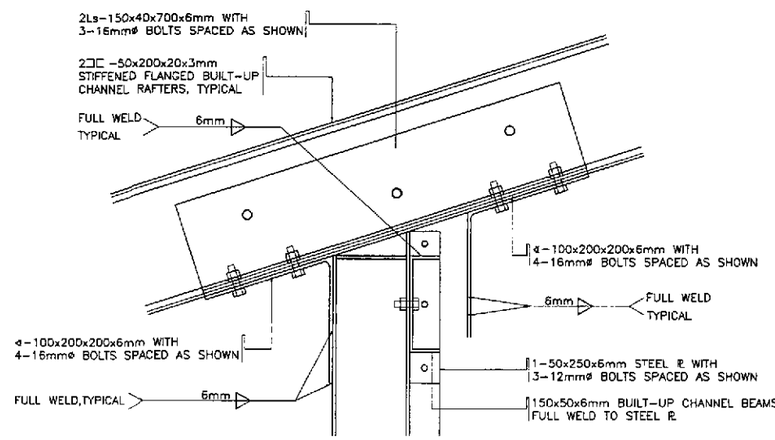

12 FA-11 DETAIL - 11
SCALE 1:5

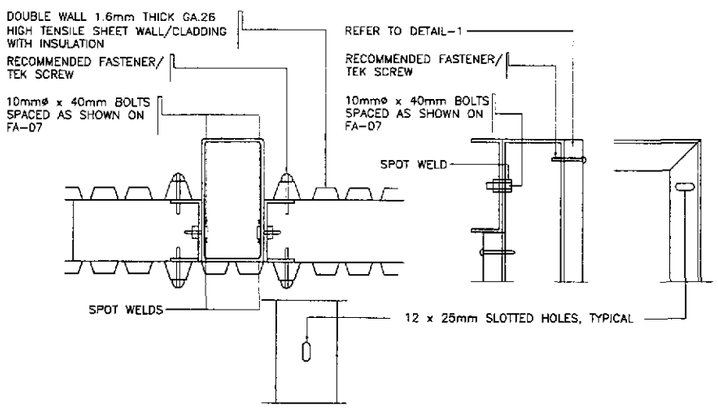

1 FA-11 DETAIL - 1
SCALE 1:5

4 FA-11 DETAIL - 2
SCALE 1:5

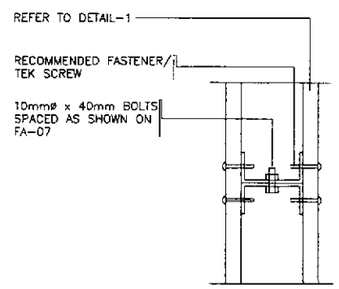

6 FA-11 DETAIL - 3
SCALE 1:5

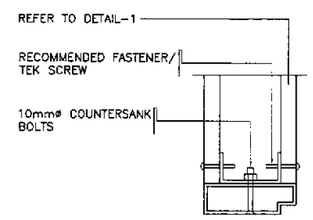

8 FA-11 DETAIL - 4
SCALE 1:5

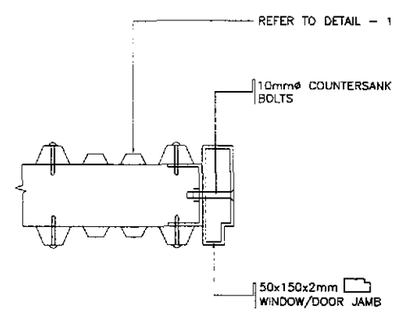

11 FA-11 DETAIL - 5
SCALE 1:5

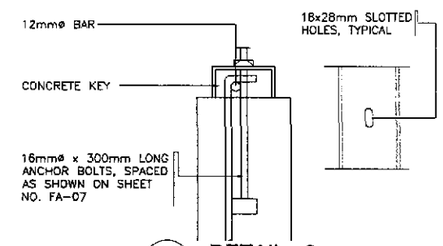

14 FA-11 DETAIL - 6
SCALE 1:5

ARNEL P. GONZALES
ENGINEER

PTR. NO. 5846340 P.R.C. NO. 53457
ISSUED ON 04/26/2002 T.I.N. 138-062-682
ISSUED AT SAN JUAN,M.M.

JICA
JAPAN INTERNATIONAL COOPERATION AGENCY
KEI KATAHIRA & ENGINEERS INTERNATIONAL
YEC YACHIYO ENGINEERING CO., LTD.

	DATE	SIGNATURE
DESIGNED	9/2/02	A. P. GONZALES
CHECKED	9/23/02	A. P. GONZALES
SUBMITTED	10/14/02	TEAM LEADER

REPUBLIC OF THE PHILIPPINES
DEPARTMENT OF PUBLIC WORKS AND HIGHWAYS

PUHL - PMO	BUREAU OF DESIGN		OFFICE OF THE SECRETARY	
Submitted By:	Reviewed By:	Recommended By:	Recommended By: (See cover sheet for Signature)	Approved By: (See cover sheet for Signature/Approval)
DANILO C. TRAJANO	WILFREDO S. LOPEZ	GILBERTO S. REYES	MANUEL M. BONDAN	SIMEON A. DATUMANONG
Project Director	Chief, Structural Division	OIC, Director IV	Undersecretary	Secretary

PROJECT AND LOCATION :
THE DETAILED DESIGN STUDY ON UPGRADING INTER-URBAN HIGHWAY SYSTEM ALONG THE PAN-PHILIPPINE HIGHWAY (Plaridel, Cabanatuan and San Jose Bypasses)
PLARIDEL BYPASS - CONTRACT PACKAGE III

SCALE : AS SHOWN
FULL SIZE A1

SHEET CONTENTS :
ENGINEER'S FIELD OFFICE AND LIVING QUARTERS
DETAILS OF CONNECTIONS DETAIL 1 TO 15

SHEET NO. : FA-11

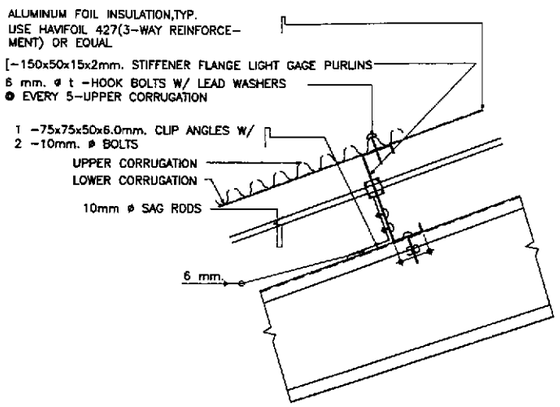

ELEVATION

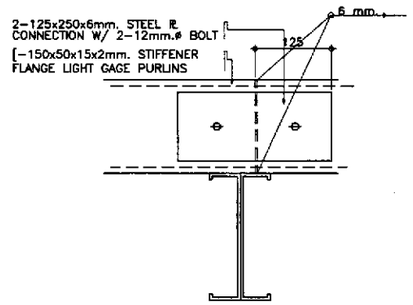

SECTION , SPLICE CONNECTION

2 / FA-12 PURLIN CONNECTION
SCALE 1:5

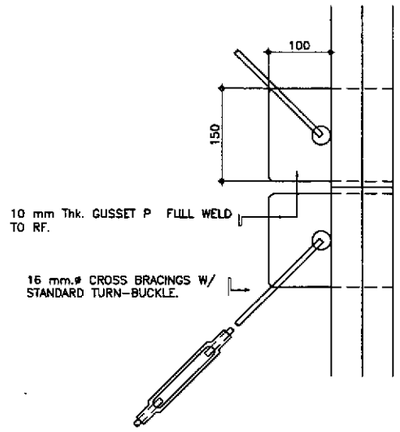

P L A N

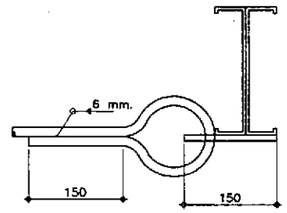

SECTION

4 / FA-12 CROSS-BRACING CONNECTION
SCALE 1:5

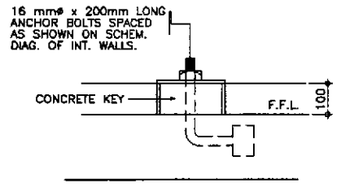

5 / FA-12 DETAIL - a
SCALE 1:5

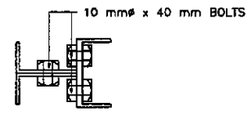

6 / FA-12 DETAIL - b
SCALE 1:5

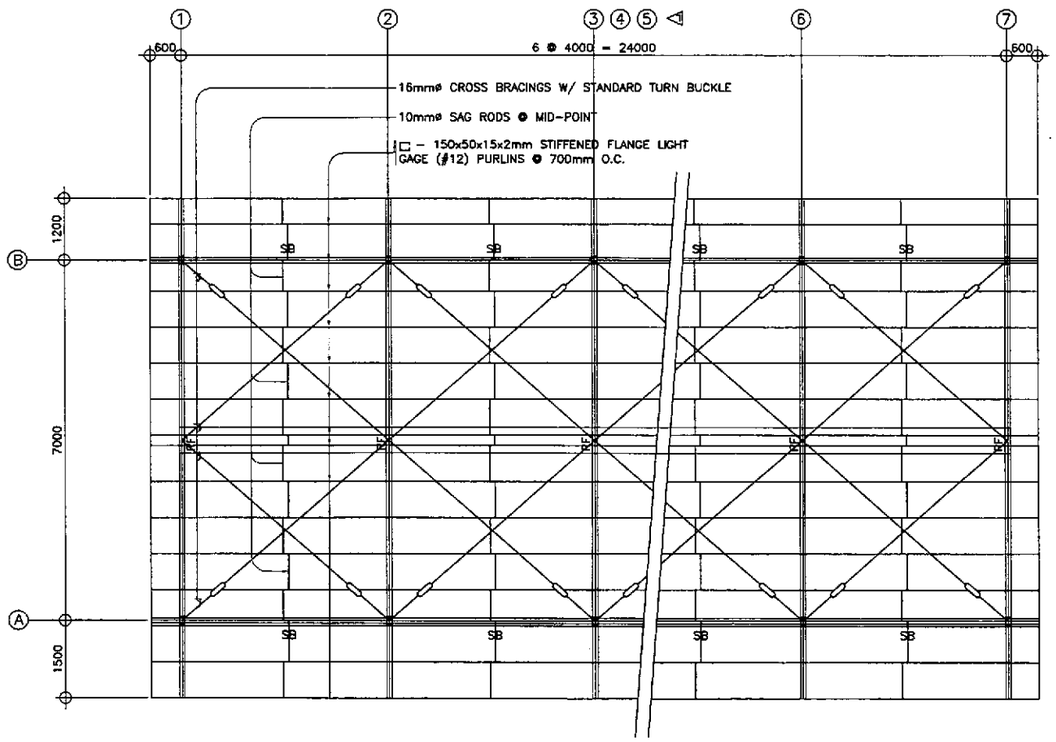

1 / FA-12 ROOF FRAMING PLAN
SCALE 1:60

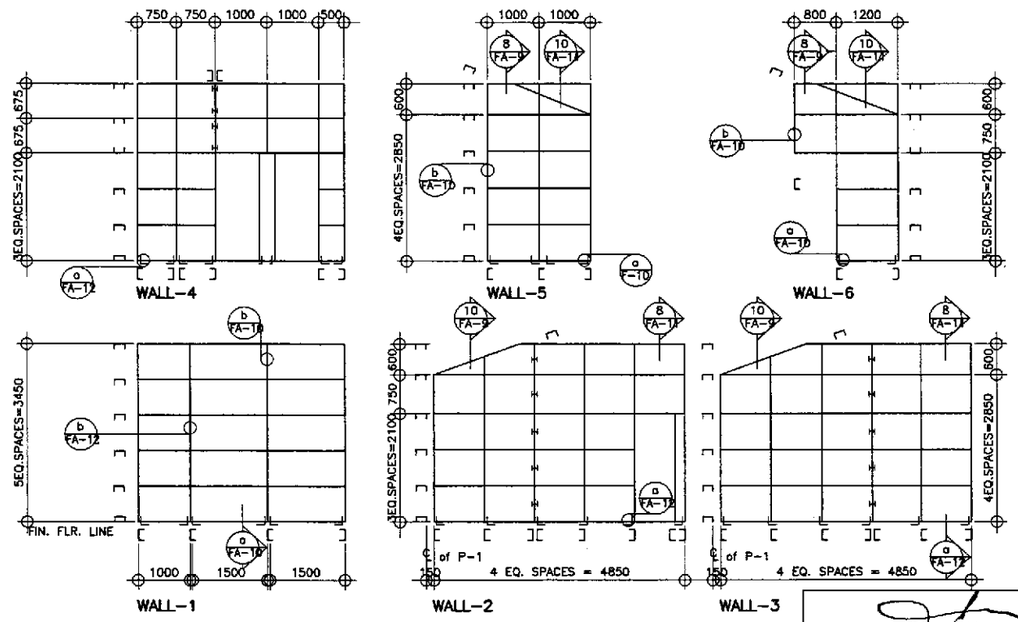

3 / FA-12 SCHEMATIC DIAGRAMS OF INTERIOR WALLS
SCALE 1:60

ARNEL P. GONZALES
ENGINEER

PTR. NO. 5846340 P.R.C. NO. 53457
ISSUED ON 04/26/2002 T.I.N. 138-062-682
ISSUED AT SAN JUAN,M.M.

JICA
JAPAN INTERNATIONAL COOPERATION AGENCY
KEI KATAHIRA & ENGINEERS INTERNATIONAL
YEO YACHIYO ENGINEERING CO., LTD.

	DATE	SIGNATURE
DESIGNED	9/19/02	A. P. GONZALES
CHECKED	9/23/02	A. P. GONZALES
SUBMITTED	10/14/02	TEAM LEADER

REPUBLIC OF THE PHILIPPINES
DEPARTMENT OF PUBLIC WORKS AND HIGHWAYS

PJHL - PMO	BUREAU OF DESIGN		OFFICE OF THE SECRETARY	
Submitted By:	Reviewed By:	Recommended By:	Recommended By: (See cover sheet for Signature)	Approved By: (See cover sheet for Signature/Approved)
DANILO C. TRAJANO	WILFREDO S. LOPEZ	GILBERTO S. REYES	MANUEL M. BONOAN	SIMEON A. DATUMANONG
Project Director	Chief, Structural Division	OIC, Director IV	Undersecretary	Secretary

PROJECT AND LOCATION :
THE DETAILED DESIGN STUDY ON UPGRADING INTER-URBAN HIGHWAY SYSTEM ALONG THE PAN-PHILIPPINE HIGHWAY (Plaridel, Cabanatuan and San Jose Bypasses)
PLARIDEL BYPASS - CONTRACT PACKAGE III

SCALE : AS SHOWN FULL SIZE A1

SHEET CONTENTS :
ENGINEER'S FIELD OFFICE AND LIVING QUARTERS
ROOF FRAMING PLAN, SCHEMATIC DIAGRAM PURLIN CONN. & CROSS-BRACING CONN.

SHEET NO. : FA-12

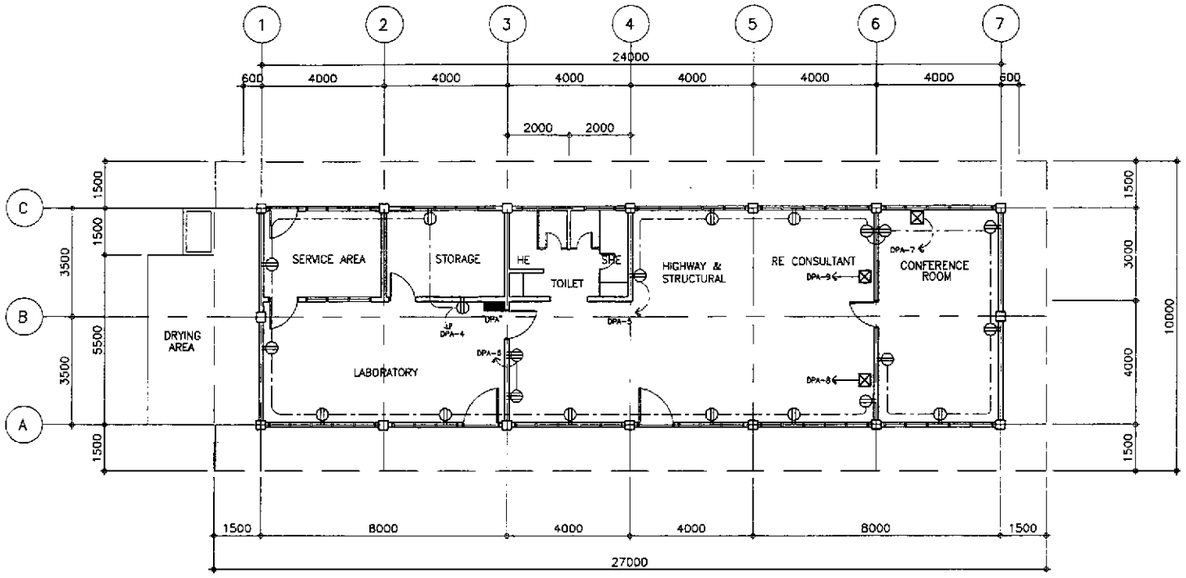

2 FE-01 POWER LAYOUT OF THE ENGINEER'S FIELD OFFICE / LABORATORY
SCALE 1:100

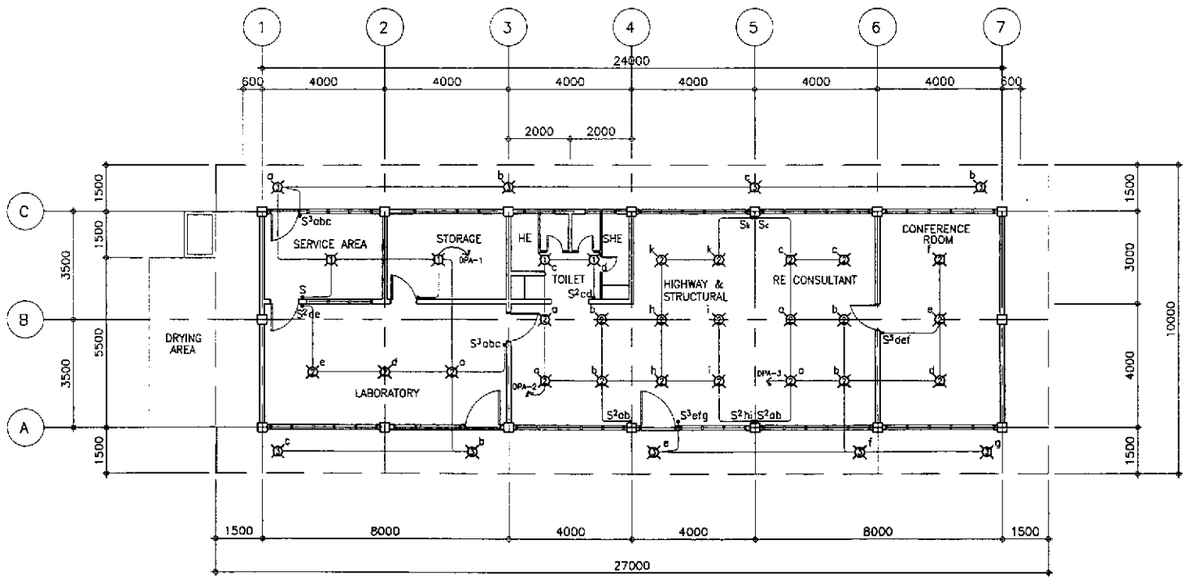

2 FE-01 LIGHTING LAYOUT OF THE ENGINEER'S FIELD OFFICE / LABORATORY
SCALE 1:100

GENERAL NOTES:

1. ALL ELECTRICAL WORKS SHALL BE DONE IN STRICT COMPLIANCE WITH THE PROVISIONS OF THE LATEST EDITION OF THE PHIL. ELECT. CODE, EXISTING APPLICABLE ORDINANCES, RULES AND REGULATIONS OF THE LOCAL GOVERNMENT AND THE REQUIREMENTS OF THE POWER COMPANY.
2. THE TYPE OF POWER SERVICE TO USED SHALL BE SINGLE-PHASE 2-WIRE, 240 VOLTS, 60Hz. AC.
3. ALL WIRINGS SHALL BE INSTALLED IN STANDARD GALVANIZED RIGID STEEL CONDUIT, RUN EMBEDDED INSIDE THE CONCRETE AND HOLLOW BLOCK STRUCTURES, SLABS, COLUMNS, WALLS PARTITIONS AND/OR RUN BETWEEN DOUBLE WALL WOODED PARTITIONS OR INSIDE THE CEILING SPACES.
4. ALL LIGHTING CIRCUIT HOMERUNS AND CONVENIENCE OUTLETS SHALL BE WIRED WITH NOT LESS THAN 3.5mm IN SIZE.
5. THE MINIMUM SIZES OF WIRE AND CONDUIT TO BE USED SHALL BE 2.0mm² AND 15mm NOMINAL DIAMETER, RESPECTIVELY.
6. ALL NON-CURRENT CARRYING METAL PARTS OF ELECTRICAL EQUIPMENT SHALL BE PROPERLY GROUNDED IN ACCORDANCE WITH THE PROVISIONS OF ARTICLE IV OF THE PHIL. ELECT. CODE, PART I, LATEST EDITION.
7. WHENEVER REQUIRED AND NECESSARY, PULL BOXES OF PROPER SIZES SHALL BE INSTALLED AT CONVENIENT AND INCONSPICUOUS LOCATIONS, ALTHOUGH SUCH BOXES ARE NOT SHOWN ON THE PLAN IS NOR MENTIONED IN THE SPECIFICATIONS.
8. ALL WALL OUTLETS SHALL BE INSTALLED AT THE FOLLOWING HEIGHT ABOVE THE FINISHED FLOOD LEVEL, UNLESS OTHERWISE NOTED.

   A. WALL SWITCHES .....1200 mm
   B. CONVENIENCE OUTLETS .....300 mm
   C. AIR CONDITIONING OUTLETS ....AT CONVENIENT HEIGHT NEAR THE EQUIPMENT
9. STANDARD TYPE OF ACCESSORIES, SPLICING DEVICES, TERMINATORS AND OTHER APPURTENANCES FOR THE ENTIRE ELECTRICAL INSTALLATION SHALL BE USED.
10. ALL MATERIALS TO BE USED SHALL BE BRAND NEW AND OF THE APPROVED TYPE FOR THE LOCATION AND PURPOSE.
11. THE CONTRACTOR SHALL VERIFY AND ORIENT THE ACTUAL LOCATION OF THE SERVICE ENTRANCE FOR CONNECTION TO POWER COMPANY SERVICE POINT.
12. ALL ELECTRICAL WORKS SHALL BE DONE UNDER THE STRICT SUPERVISION OF A DULY REGISTERED ELECTRICAL ENGINEER.

NOTE:

ALL FLUORESCENT LIGHTING FIXTURES SHALL BE EQUIPPED WITH A HIGH POWER FACTOR PRE-HEAT WITH STARTER TYPE BALLAST, COMPLETE WITH ALL NECESSARY ACCESSORIES, WIRED AND READY FOR SERVICE USED.

ELECTRICAL SYMBOLS:

- CEILING LIGHT; REFER TO SCHEDULE OF LIGHTING FIXTURES AND LAMPS
- ELECTRICAL RISER
- S — ONE-WAY WALL SWITCH, 15A, 250V
- S^2 — 2 ONE-WAY WALL SWITCHES ON ONE-GANG PLATE, 15A, 250V
- S^3 — 3 ONE-WAY WALL SWITCHES ON ONE-GANG PLATE, 15A, 250V
- DUPLEX CONVENIENCE OUTLET, GROUNDING TYPE, 20A, 250V
- HEAVY DUTY CONVENIENCE OUTLETS, SINGLE-GROUNDING TYPE, 30A, 250V
- AIR CONDITIONING OUTLET GROUNDING TYPE WITH AUTOMATIC CIRCUIT BREAKER IN ONE ENCLOSURE
- ENCLOSED AUTOMATIC CIRCUIT BREAKER (ACB) 70AT, 100AF, 2P, 240V
- DISTRIBUTION PANEL BOARD
- PULL BOX OR JUNCTION BOX
- m — ELECTRIC SERVICE METER
- PROPOSED SERVICE ENTRANCE WITH CAP
- CONCEALED OR EMBEDED CONDUIT RUN
- UNDERGROUND OR UNDER FLOOR CONDUIT RUN
- CIRCUIT HOMERUN TO PANEL BOARD

ERNESTO M. ANTIOQUIA
ENGINEER

PTR. NO. 7403664 P.E.E. NO. 2913
ISSUED ON 01/02/2002 ISSUED AT CABUYAO, LAGUNA
T.I.N. 109-382-379

JICA
JAPAN INTERNATIONAL COOPERATION AGENCY
KEI KATAHIRA & ENGINEERS INTERNATIONAL
YEC YACHIYO ENGINEERING CO., LTD.

	DATE	SIGNATURE
DESIGNED	9/21/02	E.M. ANTIOQUIA
CHECKED	9/23/02	E.M. ANTIOQUIA
SUBMITTED	10/1/02	TEAM LEADER

REPUBLIC OF THE PHILIPPINES
DEPARTMENT OF PUBLIC WORKS AND HIGHWAYS

PJHL – PMO	BUREAU OF DESIGN		OFFICE OF THE SECRETARY	
Submitted By:	Reviewed By:	Recommended By:	Recommended By: (See cover sheet for Signature)	Approved By: (See cover sheet for Signature/Approval)
DANILO C. TRAJANO	FE M. BARRIENTOS	GILBERTO S. REYES	MANUEL M. BONOAN	SIMEON A. DATUMANONG
Project Director	Chief, Mechanical-Elect'l Div.	OIC, Director IV	Undersecretary	Secretary

PROJECT AND LOCATION :
THE DETAILED DESIGN STUDY ON UPGRADING INTER-URBAN HIGHWAY SYSTEM ALONG THE PAN-PHILIPPINE HIGHWAY (Plaridel, Cabanatuan and San Jose Bypasses)
PLARIDEL BYPASS - CONTRACT PACKAGE III

SCALE : AS SHOWN FULL SIZE A1

SHEET CONTENTS :
ENGR'S FIELD OFFICE / LABORATORY
LIGHTING LAYOUT, POWER LAYOUT
ELECTRICAL SYMBOLS & GENERAL NOTES

SHEET NO. : FE-01

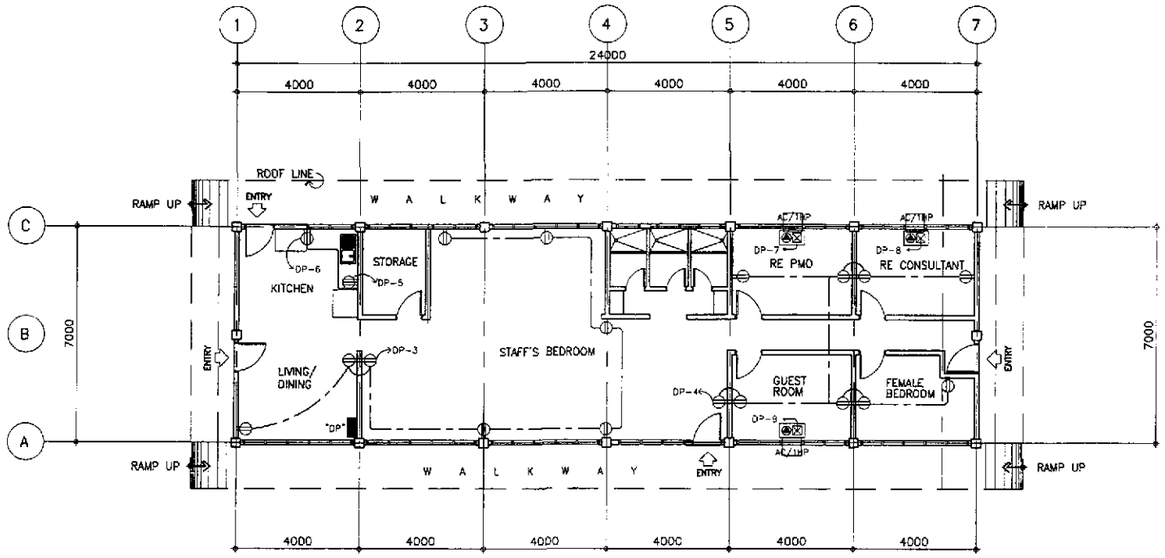

2 FE-02 POWER LAYOUT FOR ENGINEER'S LIVING QUARTER
SCALE 1:100

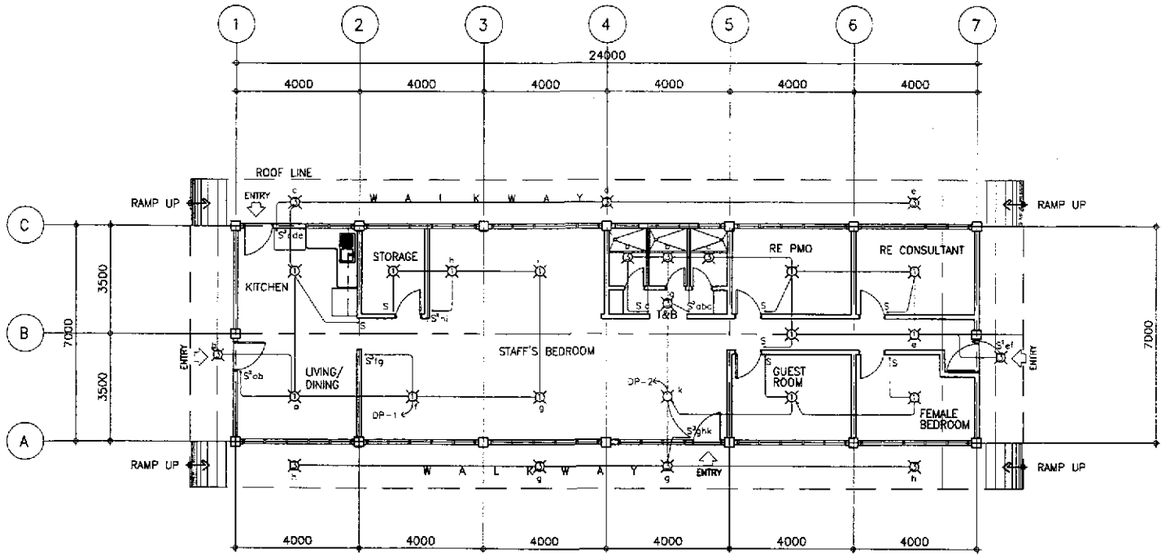

1 FE-02 LIGHTING LAYOUT FOR ENGINEER'S LIVING QUARTER
SCALE 1:100

GENERAL NOTES:

1. ALL ELECTRICAL WORKS SHALL BE DONE IN STRICT COMPLIANCE WITH THE PROVISIONS OF THE LATEST EDITION OF THE PHIL. ELECT. CODE, EXISTING APPLICABLE ORDINANCES, RULES AND REGULATIONS OF THE LOCAL GOVERNMENT AND THE REQUIREMENTS OF THE POWER COMPANY.
2. THE TYPE OF POWER SERVICE TO USED SHALL BE SINGLE-PHASE 2-WIRE, 240 VOLTS, 60Hz, AC.
3. ALL WIRINGS SHALL BE INSTALLED IN STANDARD GALVANIZED RIGID STEEL CONDUIT, RUN EMBEDDED INSIDE THE CONCRETE AND HOLLOW BLOCK STRUCTURES, SLABS, COLUMNS, WALLS PARTITIONS AND/OR RUN BETWEEN DOUBLE WALL WOODED PARTITIONS OR INSIDE THE CEILING SPACES.
4. ALL LIGHTING CIRCUIT HOMERUNS AND CONVENIENCE OUTLETS SHALL BE WIRED WITH NOT LESS THAN 3.5mm IN SIZE.
5. THE MINIMUM SIZES OF WIRE AND CONDUIT TO BE USED SHALL BE 2.0mm² AND 15mm NOMINAL DIAMETER, RESPECTIVELY.
6. ALL NON-CURRENT CARRYING METAL PARTS OF ELECTRICAL EQUIPMENT SHALL BE PROPERLY GROUNDED IN ACCORDANCE WITH THE PROVISIONS OF ARTICLE IV OF THE PHIL. ELECT. CODE, PART I, LATEST EDITION.
7. WHENEVER REQUIRED AND NECESSARY, PULL BOXES OF PROPER SIZES SHALL BE INSTALLED AT CONVENIENT AND INCONSPICUOUS LOCATIONS, ALTHOUGH SUCH BOXES ARE NOT SHOWN ON THE PLAN IS NOR MENTIONED IN THE SPECIFICATIONS.
8. ALL WALL OUTLETS SHALL BE INSTALLED AT THE FOLLOWING HEIGHT ABOVE THE FINISHED FLOOD LEVEL, UNLESS OTHERWISE NOTED.

   A. WALL SWITCHES .....1200 mm
   B. CONVENIENCE OUTLETS .....300 mm
   C. AIR CONDITIONING OUTLETS ....AT CONVENIENT HEIGHT NEAR THE EQUIPMENT
9. STANDARD TYPE OF ACCESSORIES, SPLICING DEVICES, TERMINATORS AND OTHER APPURTENANCES FOR THE ENTIRE ELECTRICAL INSTALLATION SHALL BE USED.
10. ALL MATERIALS TO BE USED SHALL BE BRAND NEW AND OF THE APPROVED TYPE FOR THE LOCATION AND PURPOSE.
11. THE CONTRACTOR SHALL VERIFY AND ORIENT THE ACTUAL LOCATION OF THE SERVICE ENTRANCE FOR CONNECTION TO POWER COMPANY SERVICE POINT.
12. ALL ELECTRICAL WORKS SHALL BE DONE UNDER THE STRICT SUPERVISION OF A DULY REGISTERED ELECTRICAL ENGINEER.

NOTE:

ALL FLUORESCENT LIGHTING FIXTURES SHALL BE EQUIPPED WITH A HIGH POWER FACTOR PRE-HEAT WITH STARTER TYPE BALLAST, COMPLETE WITH ALL NECESSARY ACCESSORIES, WIRED AND READY FOR SERVICE USED.

ELECTRICAL SYMBOLS:

- CEILING LIGHT; REFER TO SCHEDULE OF LIGHTING FIXTURES AND LAMPS
- ELECTRICAL RISER
- S — ONE-WAY WALL SWITCH, 15A, 250V
- S^2 — 2 ONE-WAY WALL SWITCHES ON ONE-GANG PLATE, 15A, 250V
- S^3 — 3 ONE-WAY WALL SWITCHES ON ONE-GANG PLATE, 15A, 250V
- DUPLEX CONVENIENCE OUTLET, GROUNDING TYPE, 20A, 250V
- HEAVY DUTY CONVENIENCE OUTLETS, SINGLE-GROUNDING TYPE, 30A, 250V
- AIR CONDITIONING OUTLET GROUNDING TYPE WITH AUTOMATIC CIRCUIT BREAKER IN ONE ENCLOSURE
- ENCLOSED AUTOMATIC CIRCUIT BREAKER. (ACB) 70AT, 100AF, 2P, 240V
- DISTRIBUTION PANEL BOARD
- PULL BOX OR JUNCTION BOX
- (m) — ELECTRIC SERVICE METER
- PROPOSED SERVICE ENTRANCE WITH CAP
- CONCEALED OR EMBEDED CONDUIT RUN
- UNDERGROUND OR UNDER FLOOR CONDUIT RUN
- CIRCUIT HOMERUN TO PANEL BOARD

ERNESTO M. ANTIOQUIA
ENGINEER

PTR. NO. 7403664 P.E.E. NO. 2913
ISSUED ON 01/02/2002 ISSUED AT CABUYAO, LAGUNA
T.I.N. 109-382-379

JICA
JAPAN INTERNATIONAL COOPERATION AGENCY
KATAHIRA & ENGINEERS INTERNATIONAL
YACHIYO ENGINEERING CO., LTD.

	DATE	SIGNATURE
DESIGNED	9/13/02	E.M. ANTIOQUIA
CHECKED	9/13/02	E.M. ANTIOQUIA
SUBMITTED	10/14/02	TEAM LEADER

REPUBLIC OF THE PHILIPPINES
DEPARTMENT OF PUBLIC WORKS AND HIGHWAYS

PJHL – PMO	BUREAU OF DESIGN		OFFICE OF THE SECRETARY	
Submitted By:	Reviewed By:	Recommended By:	Recommended By: (See cover sheet for Signature)	Approved By: (See cover sheet for Signature/Approval)
DANILO C. TRAJANO	FE M. BARRIENTOS	GILBERTO S. REYES	MANUEL M. BONDAN	SIMEON A. DATUMANONG
Project Director	Chief, Mechanical–Elect'l Div.	OIC, Director IV	Undersecretary	Secretary

PROJECT AND LOCATION :
THE DETAILED DESIGN STUDY ON UPGRADING INTER-URBAN HIGHWAY SYSTEM ALONG THE PAN-PHILIPPINE HIGHWAY (Plaridel, Cabanatuan and San Jose Bypasses)
PLARIDEL BYPASS - CONTRACT PACKAGE III

SCALE : AS SHOWN
FULL SIZE A1

SHEET CONTENTS :
ENGINEER'S LIVING QUARTERS
LIGHTING LAYOUT, POWER LAYOUT
ELECTRICAL SYMBOLS & GENERAL NOTES

SHEET NO. : FE-02

SCHEDULE OF LOADS AND COMPUTATIONS

PANELBOARD "DP" — MAIN A.C.B. : 100AF,2P, 250V 100 AT, 18 KAIC W/SOLID NEUTRAL

CRT. NO.	LOAD DESCRIPTION	VA	RATING OF BRANCH BREAKER				SIZE OF HOMERUN WIRES IN CONDUIT
			VOLTS	AF	P	AT	
1	LIGHT OUTLETS	455	220	50	2	15	2-3.5mm TW²in 15mmøC
2	LIGHT OUTLETS	640	220	50	2	15	2-3.5mm TW²in 15mmøC
3	CONVENIENCE OUTLET	1440	220	50	2	20	2-3.5mm TW²in 15mmøC
4	CONVENIENCE OUTLET	1620	220	50	2	20	2-3.5mm TW²in 15mmøC
5	REFRIGERATOR	500	220	50	2	20	2-3.5mm TW²+ 1-20mm² TW(G) IN 15mmøC
6	ELECTRIC STOVE	3000	220	50	2	30	2-5.5mm² THW+1-3.5mm² TW(G) IN 20mmøC
7	1hp,1ϕ WDO,TYPE ACU	1980	220	50	2	30	2-5.5mm² THW+1-3.5mm² TW(G) IN 20mmøC
8	1hp,1ϕ WDO,TYPE ACU	1980	220	50	2	30	2-5.5mm² THW+1-3.5mm² TW(G) IN 20mmøC
9	1hp,1ϕ WDO,TYPE ACU	1980	220	50	2	30	2-5.5mm² THW+1-3.5mm² TW(G) IN 20mmøC
10	SPARE	1500	220	50	2	20	-
11	SPARE	1500	220	50	2	20	-
12	SPARE	1500	220	50	2	20	-
	TOTAL	18,095					

I_V @ 90% D.F. = $\frac{18095}{220}$ (0.90)+0.25(8)= 76.03 Amps

I_B= $\frac{18095}{220}$ (0.90)+1.5(8)= 86.03 Amps

MAIN ACB: 100AF,2P,250 V,100AT,15KAIC

USE : 2-38mm² THW + 1-14mm² TW(G) IN 40mmø RSC

SCHEDULE OF LIGHTING FIXTURES & LAMPS

SYMBOLS	DESCRIPTION	MOUNTING & INSTALLATION
1	ONE (1) 40 WATTS, 220V, FLUORESCENT LIGHTING FIXTURES, BOX TYPE	SURFACE CEILING MOUNTED
2	ONE (2) 40 WATTS, 220V, FLUORESCENT LIGHTING FIXTURES, BOX TYPE	SURFACE CEILING MOUNTED
3	ONE (1)-SL-18 LAMP WITH HEXLESS TYPE, MEDIUM BASE PORCELAIN RECEPTACLE	SURFACE CEILING MOUNTED

NOTE:
ALL FLUORESCENT LIGHTING FIXTURES SHALL BE EQUIPPED WITH A HIGH POWER FACTOR PRE-HEAT WITH STARTER TYPE BALLAS, COMPLETE WITH ALL NECESSARY ACCESSORIES, WIRED AND READY FOR USE.

ENGINEER'S LIVING QUARTERS

SCHEDULE OF LOADS AND COMPUTATIONS

PANELBOARD "DPA" — MAIN A.C.B. : 225AF,2P, 250V 200 AT, 18 KAIC W/SOLID NEUTRAL

CRT. NO.	LOAD DESCRIPTION	VA	RATING OF BRANCH BREAKER				SIZE OF HOMERUN WIRES IN CONDUIT
			VOLTS	AF	P	AT	
1	LIGHT OUTLETS	590	220	50	2	15	2-3.5mm TW²in 15mmøC
2	LIGHT OUTLETS	1210	220	50	2	15	2-3.5mm TW²in 15mmøC
3	LIGHT OUTLETS	1065	220	50	2	15	2-3.5mm TW²in 15mmøC
4	CONVENIENCE OUTLETS	1800	220	50	2	20	2-3.5mm TW²+ 1-2.0mm² TW(G) IN 15mmøC
5	CONVENIENCE OUTLETS	1620	220	50	2	20	2-3.5mm TW²+ 1-2.0mm² TW(G) IN 15mmøC
6	PHOTOCOPY MACHINE /HEAVY DUTY CO.	2500	220	50	2	20	2-3.5mm TW²+ 1-2.0mm² TW(G) IN 15mmøC
7	3TR,1ø,SPLIT TYPE ACU	6930	220	100	2	70	2-8mm² THW + 1-5.5mm² TW(G) IN 25mmøC
8	3TR,1ø,SPLIT TYPE ACU	6930	220	100	2	70	2-8mm² THW + 1-5.5mm² TW(G) IN 25mmøC
9	3TR,1ø,SPLIT TYPE ACU	6930	220	100	2	70	2-8mm² THW + 1-5.5mm² TW(G) IN 25mmøC
10	SPARE	5000	220	100	2	70	
11	SPARE FOR PERIMETER LIGHTS	1500	220	50	2	30	2-5.5mm² THW + 1-3.5mm² TW(G) IN 25mmøC
12	SPARE	1500	220	50	2	20	-
	TOTAL	37,575					

I_V @ 95% D.F. = $\frac{37575(0.95)}{220}$ +0.25(23)= 168 Amps

USE : 2-100mm² THW + 1-30mm² TW IN 50mmø RSC

I_B=162.25567+1.5(23)=196.75 Amps.

MAIN ACB: 225AF,2P,250 V,200AT,18 KAIC

SCHEDULE OF LIGHTING FIXTURES & LAMPS

SYMBOLS	DESCRIPTION	MOUNTING & INSTALLATION
1	ONE (1) 40 WATTS, 220V, FLUORESCENT LIGHTING FIXTURES, BOX TYPE	SURFACE CEILING MOUNTED
2	ONE (2) 40 WATTS, 220V, FLUORESCENT LIGHTING FIXTURES, BOX TYPE	SURFACE CEILING MOUNTED
3	ONE (1)-SL-18 LAMP WITH HEXLESS TYPE, MEDIUM BASE PORCELAIN RECEPTACLE	SURFACE CEILING MOUNTED

NOTE:
ALL FLUORESCENT LIGHTING FIXTURES SHALL BE EQUIPPED WITH A HIGH POWER FACTOR PRE-HEAT WITH STARTER TYPE BALLAS, COMPLETE WITH ALL NECESSARY ACCESSORIES, WIRED AND READY FOR USE.

ENGINEER'S FIELD OFFICE/LABORATORY

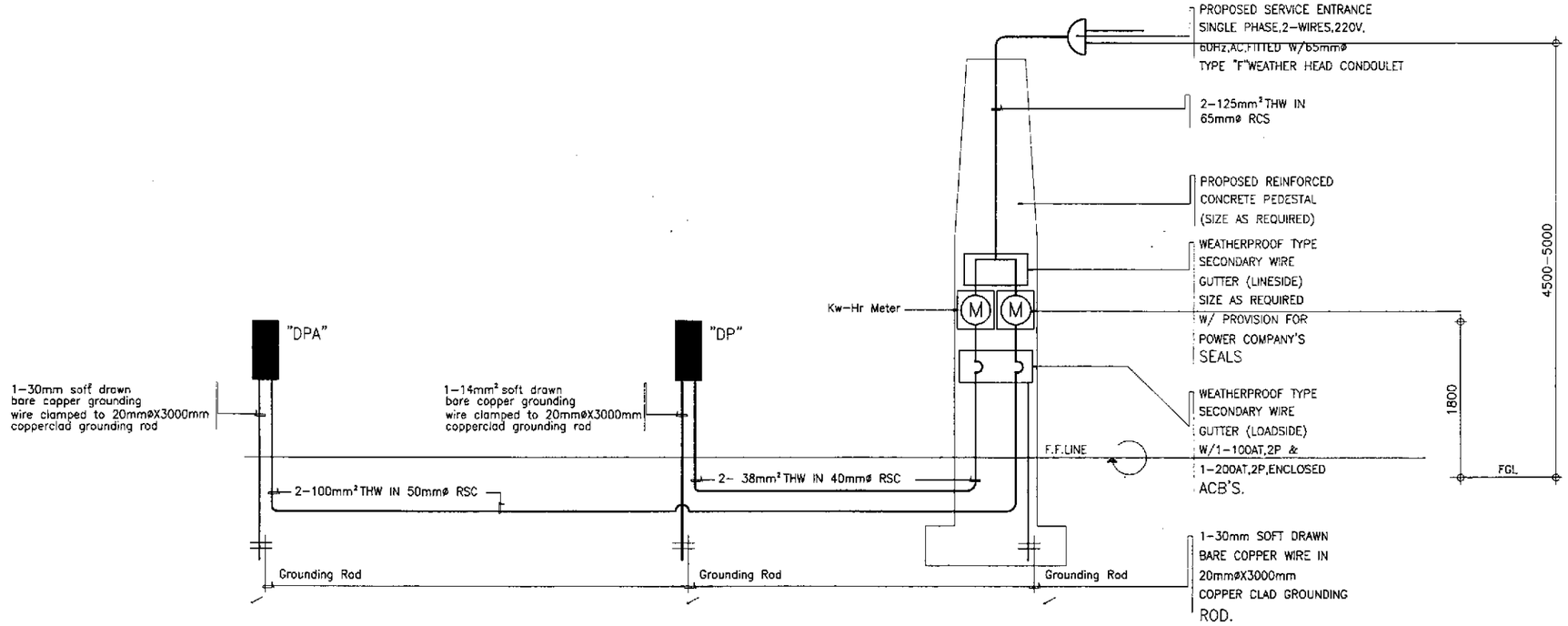

COMPUTATION FOR REQUIRED SIZE OF MAIN SERVICE ENTRANCE FEEDER:

I_T= $\frac{VA"DPA"+VA"AP"}{220}$ @ 85% DF + 0.25(I)

I_T= $\frac{37575+18095}{220}$ (0.85)+0.25(23)

I_T= 220.83 Amps.

USE : 2-125 mm² THW IN 65 mmø RSC

1 / FE-03 ELECTRICAL RISER DIAGRAMS
NOT TO SCALE

ERNESTO M. ANTIOQUIA
ENGINEER

PTR. NO. 7403654 P.E.E. NO. 2913
ISSUED ON 01/02/2002 ISSUED AT CABUYAO, LAGUNA
T.I.N. 109-382-379

JICA — JAPAN INTERNATIONAL COOPERATION AGENCY
KATAHIRA & ENGINEERS INTERNATIONAL — YACHIYO ENGINEERING CO., LTD.

	DATE	SIGNATURE
DESIGNED	9/2/02	E.M. ANTIOQUIA
CHECKED	9/13/02	E.M. ANTIOQUIA
SUBMITTED	9/14/02	TEAM LEADER

REPUBLIC OF THE PHILIPPINES
DEPARTMENT OF PUBLIC WORKS AND HIGHWAYS

PUHL - PMO	BUREAU OF DESIGN		OFFICE OF THE SECRETARY	
Submitted By:	Reviewed By:	Recommended By:	Recommended By: (See cover sheet for Signature)	Approved By: (See cover sheet for Signature/Approval)
DANILO C. TRAJANO	FE M. BARRIENTOS	GILBERTO S. REYES	MANUEL M. BONOAN	SIMEON A. DATUMANONG
Project Director	Chief, Mechanical-Elect'l Div.	OIC, Director IV	Undersecretary	Secretary

PROJECT AND LOCATION :
THE DETAILED DESIGN STUDY ON UPGRADING INTER-URBAN HIGHWAY SYSTEM ALONG THE PAN-PHILIPPINE HIGHWAY (Plaridel, Cabanatuan and San Jose Bypasses)
PLARIDEL BYPASS - CONTRACT PACKAGE III

SCALE : AS SHOWN — FULL SIZE A1

SHEET CONTENTS :
ENGINEER'S FIELD OFFICE AND LIVING QUARTERS
SCHEDULE OF LOADS AND COMPUTATIONS
ELECTRICAL RISER DIAGRAM

SHEET NO. : FE-03

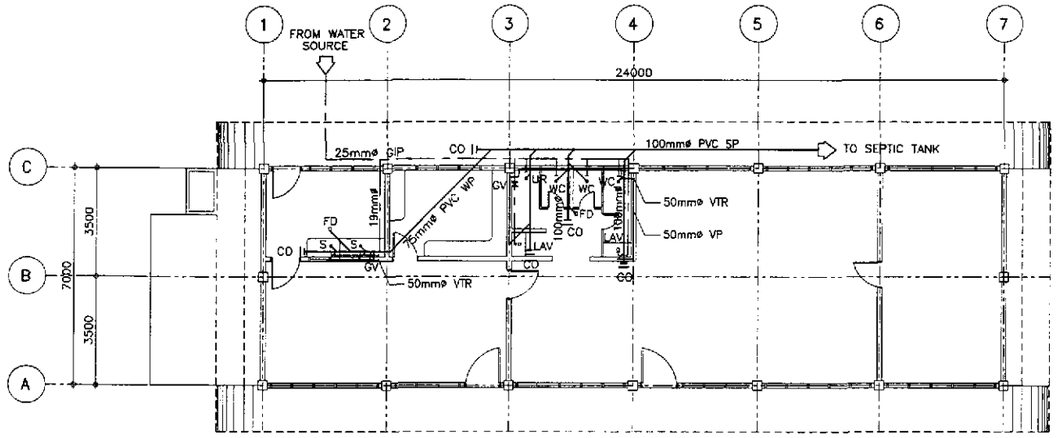

1 FP-01 ENGINEER'S FIELD OFFICE
SEWER AND WATER LINE LAYOUT
SCALE 1:100

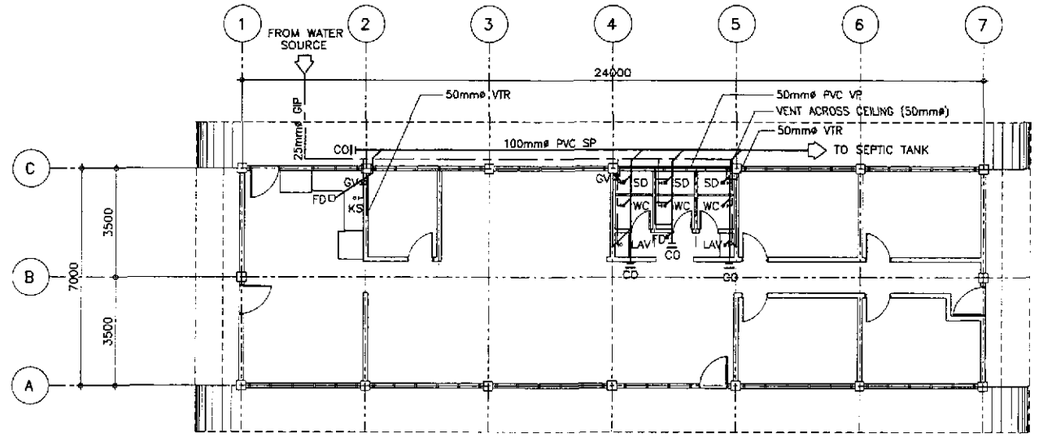

2 FP-01 ENGINEER'S LIVING QUARTER
SEWER AND WATER LINE LAYOUT
SCALE 1:100

LEGEND :

———	SEWER LINE
—·—·—	COLD WATER LINE
- - - - -	VENT PIPE, 50mmø PVC PIPE
FD	FLOOR DRAIN
UD	URINAL DRAIN
SD	SHOWER DRAIN
LAV	LAVATORY
WC	WATER CLOSET
CO	CLEAN OUT
VTR	VENT THRU ROOF, 50mmø PVC PIPE
S	SINK
KS	KITCHEN SINK
SHO	SHOWER
GIP	GALVANIZED IRON PIPE

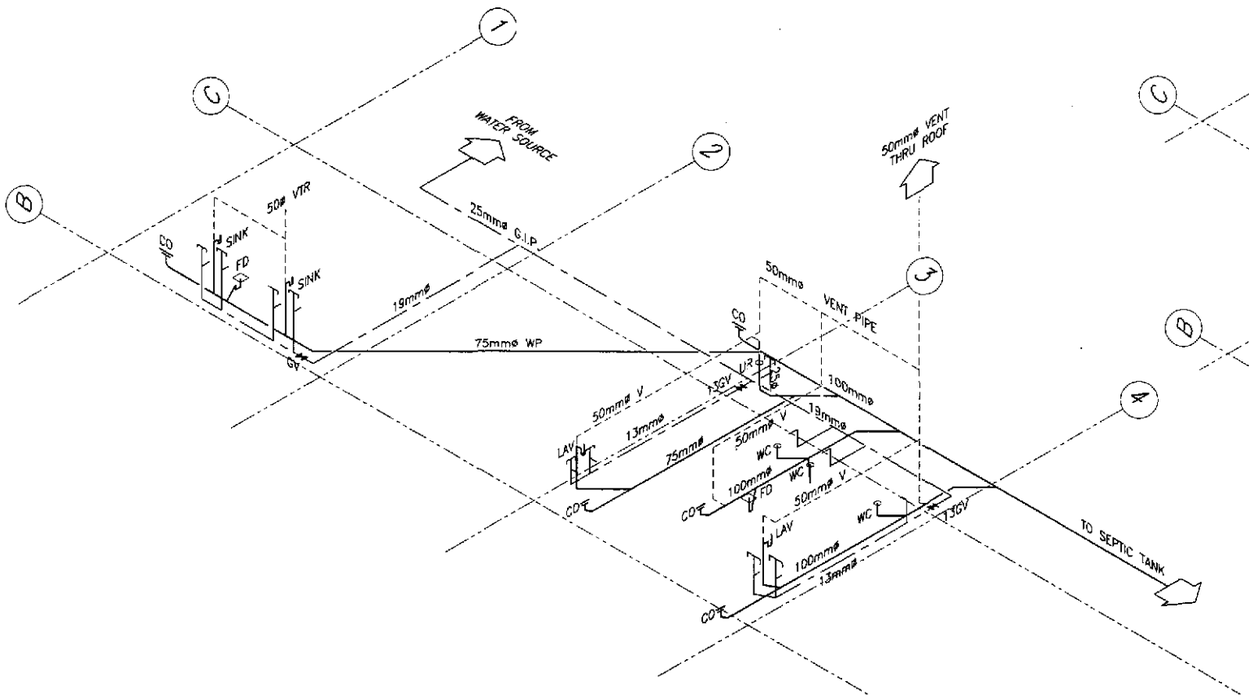

3 FP-01 (SHOWING SEWER AND WATER LINE)
ISOMETRIC DIAGRAM
SCALE 1:50

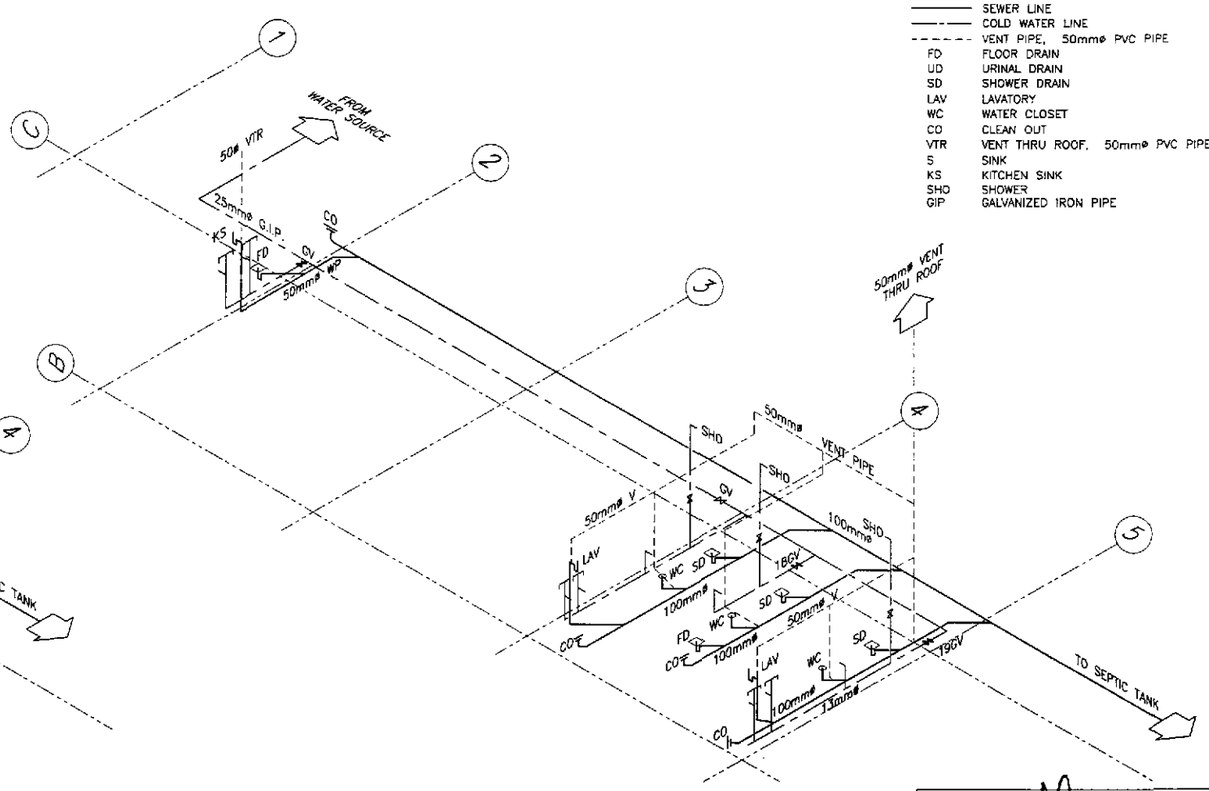

4 FP-01 (SHOWING SEWER AND WATER LINE)
ISOMETRIC DIAGRAM
SCALE 1:50

AUSTINO A. STA. MARIA
SANITARY ENGINEER

PTR. NO. 0083138 P.R.C. NO. 0000695
ISSUED ON 03/26/2002 T.I.N. 119-878-225
ISSUED AT SAN MATEO, RIZAL

JICA
JAPAN INTERNATIONAL COOPERATION AGENCY
KATAHIRA & ENGINEERS INTERNATIONAL
YACHIYO ENGINEERING CO., LTD.

	DATE	SIGNATURE
DESIGNED	9/21/02	A. STA. MARIA
CHECKED	9/23/02	A. STA. MARIA
SUBMITTED	10/1/02	TEAM LEADER

REPUBLIC OF THE PHILIPPINES
DEPARTMENT OF PUBLIC WORKS AND HIGHWAYS

PUHL – PMO	BUREAU OF DESIGN		OFFICE OF THE SECRETARY	
Submitted By:	Reviewed By:	Recommended By:	Recommended By: (See cover sheet for Signature)	Approved By: (See cover sheet for Signature/Approval)
DANILO C. TRAJANO	EMMANUEL P. CUNTAPAY	GILBERTO S. REYES	MANUEL M. BONDAN	SIMEON A. DATUMANONG
Project Director	Chief, Architectural Division	OIC, Director IV	Undersecretary	Secretary

PROJECT AND LOCATION :
THE DETAILED DESIGN STUDY ON UPGRADING INTER-URBAN HIGHWAY SYSTEM ALONG THE PAN-PHILIPPINE HIGHWAY (Plaridel, Cabanatuan and San Jose Bypasses)
PLARIDEL BYPASS - CONTRACT PACKAGE III

SCALE : AS SHOWN
FULL SIZE A1

SHEET CONTENTS :
ENGINEER'S FIELD OFFICE AND LIVING QUARTERS
SEWER AND WATER LINE LAYOUT AND ISOMETRIC DIAGRAM

SHEET NO. : FP-01

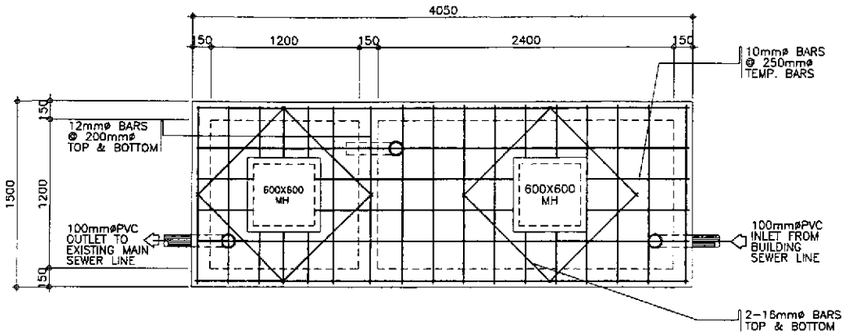

1A FP-02 PLAN
SCALE 1:20

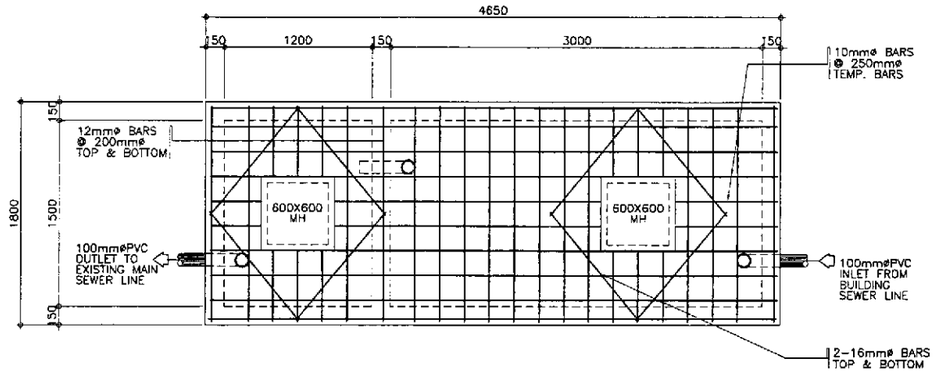

1C FP-02 PLAN
SCALE 1:20

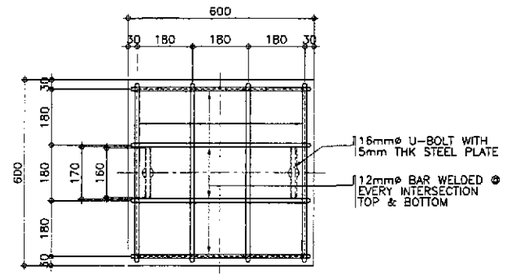

2A FP-02 PLAN
SCALE 1:20

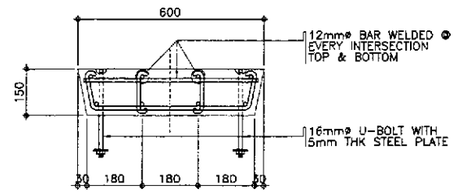

2B FP-02 SECTION
SCALE 1:20

2 FP-02 CONCRETE COVER DETAIL
SCALE AS SHOWN

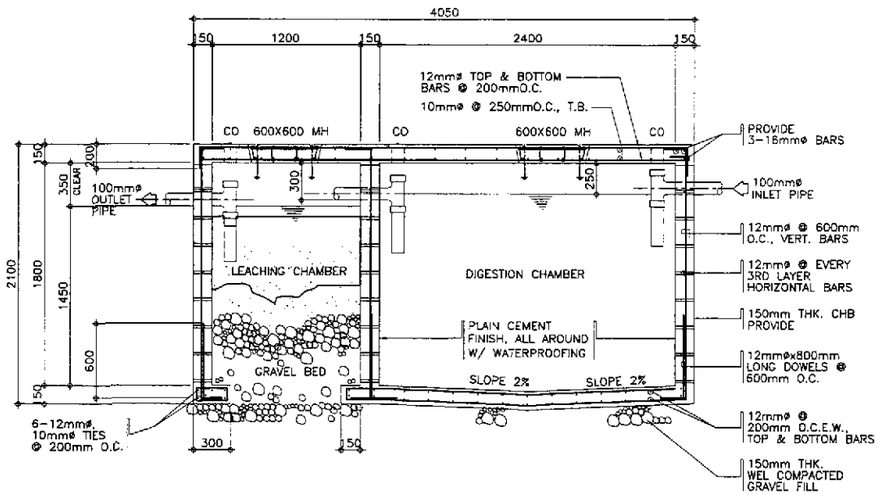

1B FP-02 SECTION
SCALE 1:20

ENGINEER'S FIELD OFFICE

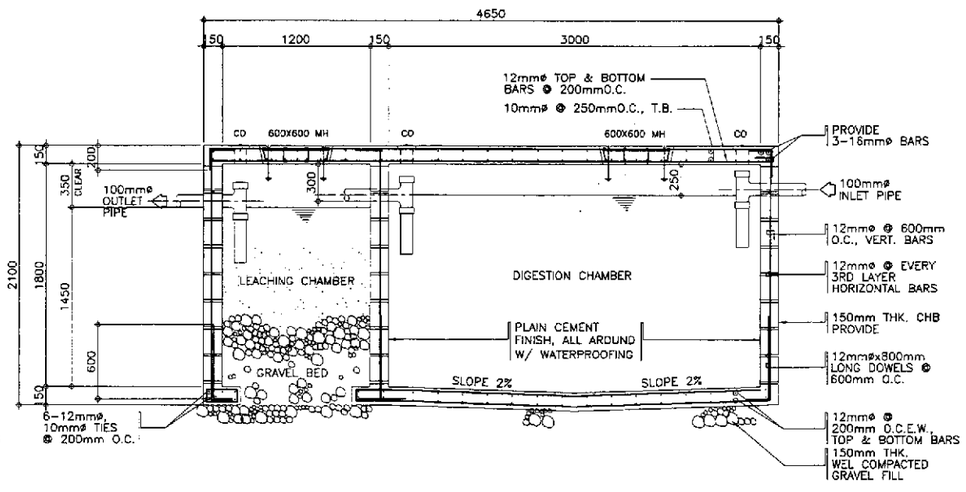

1D FP-02 SECTION
SCALE 1:20

ENGINEER'S LIVING QUARTER

1 FP-02 SEPTIC TANK DETAILS
SCALE AS SHOWN

GENERAL NOTES:

1. ALL PLUMBING WORKS INCLUDED HEREIN EXECUTED ACCORDING TO THE PROVISIONS AND REQUIREMENTS OF THE PHILIPPINE NATIONAL PLUMBING CODE.
2. SOIL AND WASTE PIPE LINE SHALL BE PVC, SIZE AS IN DRAWING.
3. ALL WATER LINES SHALL BE G.I. PIPE SCHEDULE 40 AND SIZE OF PIPES TO THE FIXTURES SHALL BE IN ACCORDANCE WITH THE MANUFACTURERS SPECIFICATIONS.
4. PROVIDE 2% SLOPE FOR HOUSE AND SEWER LINES.
5. ALL G.I. PIPES AND FITTINGS BURRIED UNDERGROUND SHALL BE LEAD COATED OR TAR COATED.
6. VENT THRU ROOF PIPE SHALL BE AT LEAST 0.30m ABOVE ROOF.
7. ALL DOWNSPOUTS SHALL BE PVC PIPES 75mmø (3") UNLESS OTHERWISE SPECIFIED.

ROSITA A. STA. MARIA
SANITARY ENGINEER

PTR. NO. 0083138 P.R.C. NO. 0000695
ISSUED ON 03/26/2002 T.I.N. 119-878-225
ISSUED AT SAN MATEO, RIZAL

JICA
JAPAN INTERNATIONAL COOPERATION AGENCY
KEI KATAHIRA & ENGINEERS INTERNATIONAL
YEC YACHIYO ENGINEERING CO., LTD.

	DATE	SIGNATURE
DESIGNED	9/21/02	STA. MARIA
CHECKED	9/23/02	STA. MARIA
SUBMITTED	10/1/02	TEAM LEADER

REPUBLIC OF THE PHILIPPINES
DEPARTMENT OF PUBLIC WORKS AND HIGHWAYS

PUHL – PMD	BUREAU OF DESIGN		OFFICE OF THE SECRETARY	
Submitted By:	Reviewed By:	Recommended By:	Recommended By: (See cover sheet for Signature)	Approved By: (See cover sheet for Signature/Approval)
DANILO C. TRAJANO	EMMANUEL P. CUNTAPAY	GILBERTO S. REYES	MANUEL M. BONOAN	SIMEON A. DATUMANONG
Project Director	Chief, Architectural Division	OIC, Director IV	Undersecretary	Secretary

PROJECT AND LOCATION :
THE DETAILED DESIGN STUDY ON UPGRADING INTER-URBAN HIGHWAY SYSTEM ALONG THE PAN-PHILIPPINE HIGHWAY (Plaridel, Cabanatuan and San Jose Bypasses)
PLARIDEL BYPASS - CONTRACT PACKAGE III

SCALE : AS SHOWN
FULL SIZE A1

SHEET CONTENTS :
ENGINEER'S FIELD OFFICE AND LIVING QUARTERS
SEPTIC TANK DETAILS

SHEET NO. : FP-02

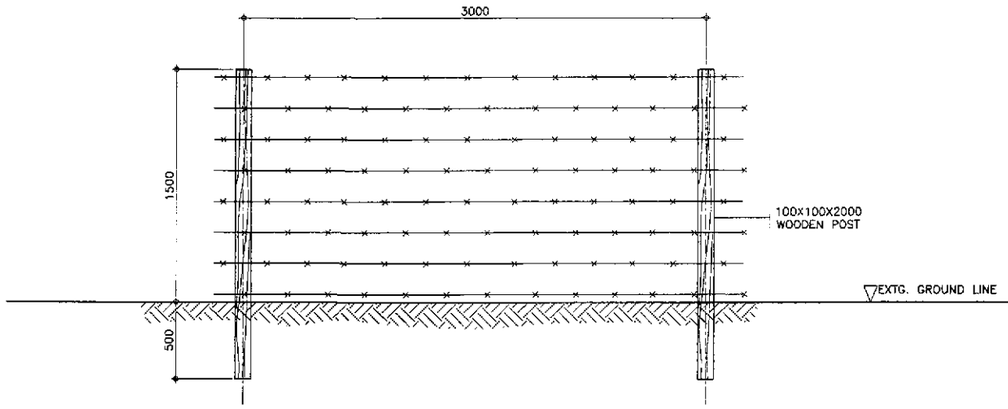

3 / FX-01 TYPICAL ELEVATION FENCE (REAR & SIDE)
SCALE 1:20

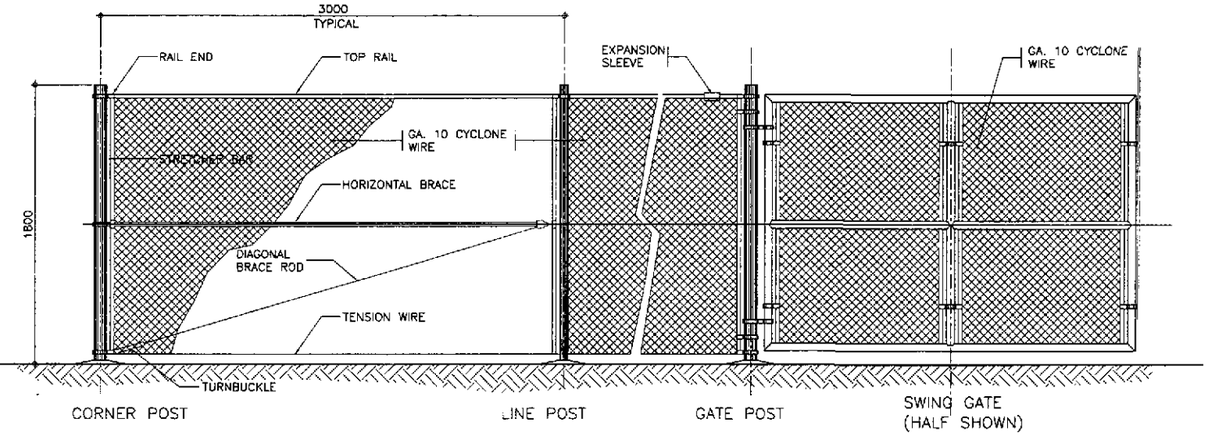

2 / FX-01 TYPICAL ELEVATION - FENCE AND GATE
SCALE 1:20

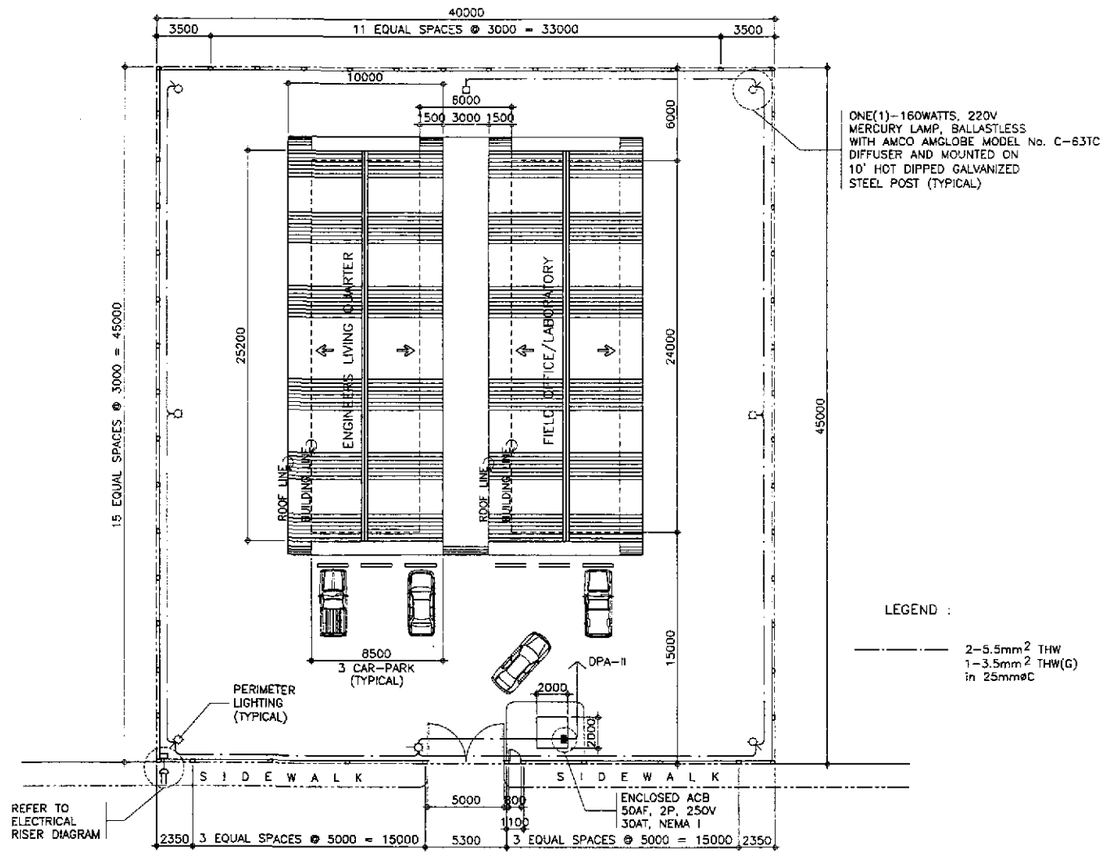

1 / FX-01 PLOT PLAN
SCALE 1:200

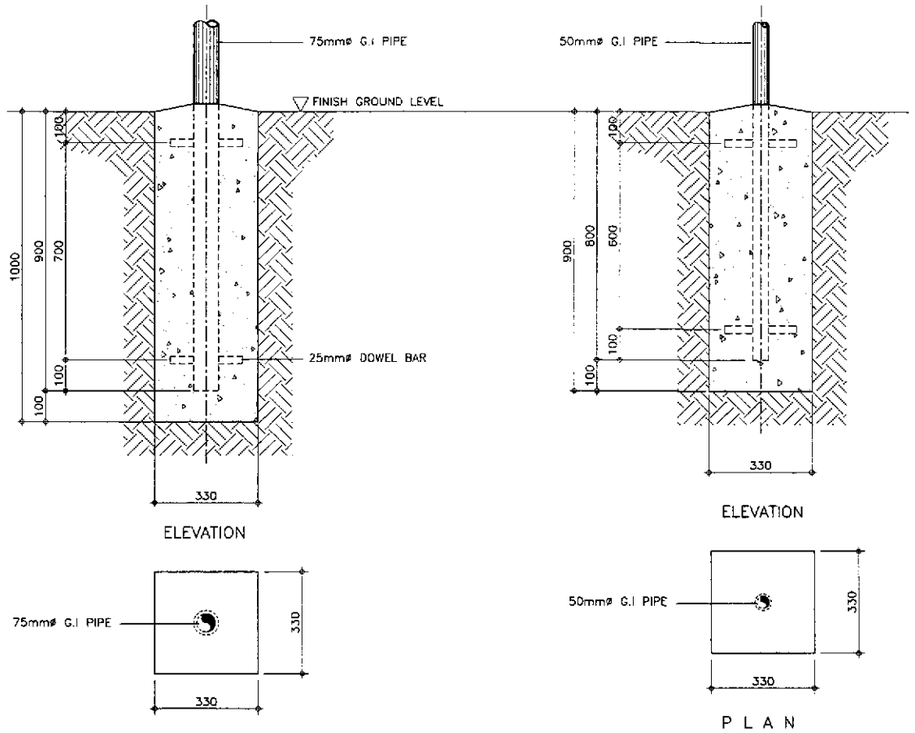

4 / FX-01 TYPICAL FOUNDATION DETAIL
SCALE 1:10

ARNEL P. GONZALES
ENGINEER

PTR. NO. 5846340 P.R.C. NO. 53457
ISSUED ON 04/26/2002 T.I.N. 138-062-682
ISSUED AT SAN JUAN,M.M.

JICA
JAPAN INTERNATIONAL COOPERATION AGENCY
KEI KATAHIRA & ENGINEERS INTERNATIONAL
YEC YACHIYO ENGINEERING CO., LTD.

	DATE	SIGNATURE
DESIGNED	9/2/02	A. P. GONZALES
CHECKED	9/23/02	A. P. GONZALES
SUBMITTED	10/14/02	TEAM LEADER

REPUBLIC OF THE PHILIPPINES
DEPARTMENT OF PUBLIC WORKS AND HIGHWAYS

PJHL – PMO	BUREAU OF DESIGN		OFFICE OF THE SECRETARY	
Submitted By:	Reviewed By:	Recommended By:	Recommended By: (See cover sheet for Signature)	Approved By: (See cover sheet for Signature/Approval)
DANILO C. TRAJANO	EMMANUEL P. CUNTAPAY	GILBERTO S. REYES	MANUEL M. BONDAN	SIMEON A. DATUMANONG
Project Director	Chief, Architectural Division	OIC, Director IV	Undersecretary	Secretary

PROJECT AND LOCATION :
THE DETAILED DESIGN STUDY ON UPGRADING INTER-URBAN HIGHWAY SYSTEM *ALONG THE PAN-PHILIPPINE HIGHWAY* (Plaridel, Cabanatuan and San Jose *Bypasses*)
PLARIDEL BYPASS - CONTRACT PACKAGE III

SCALE :
AS SHOWN
FULL SIZE A1

SHEET CONTENTS :
ENGINEER'S FIELD OFFICE AND LIVING QUARTERS
PLOT PLAN, ELEVATION OF FENCE & GATE
TYPICAL FOUNDATION DETAILS

SHEET NO. :
FX-01

OTHERS

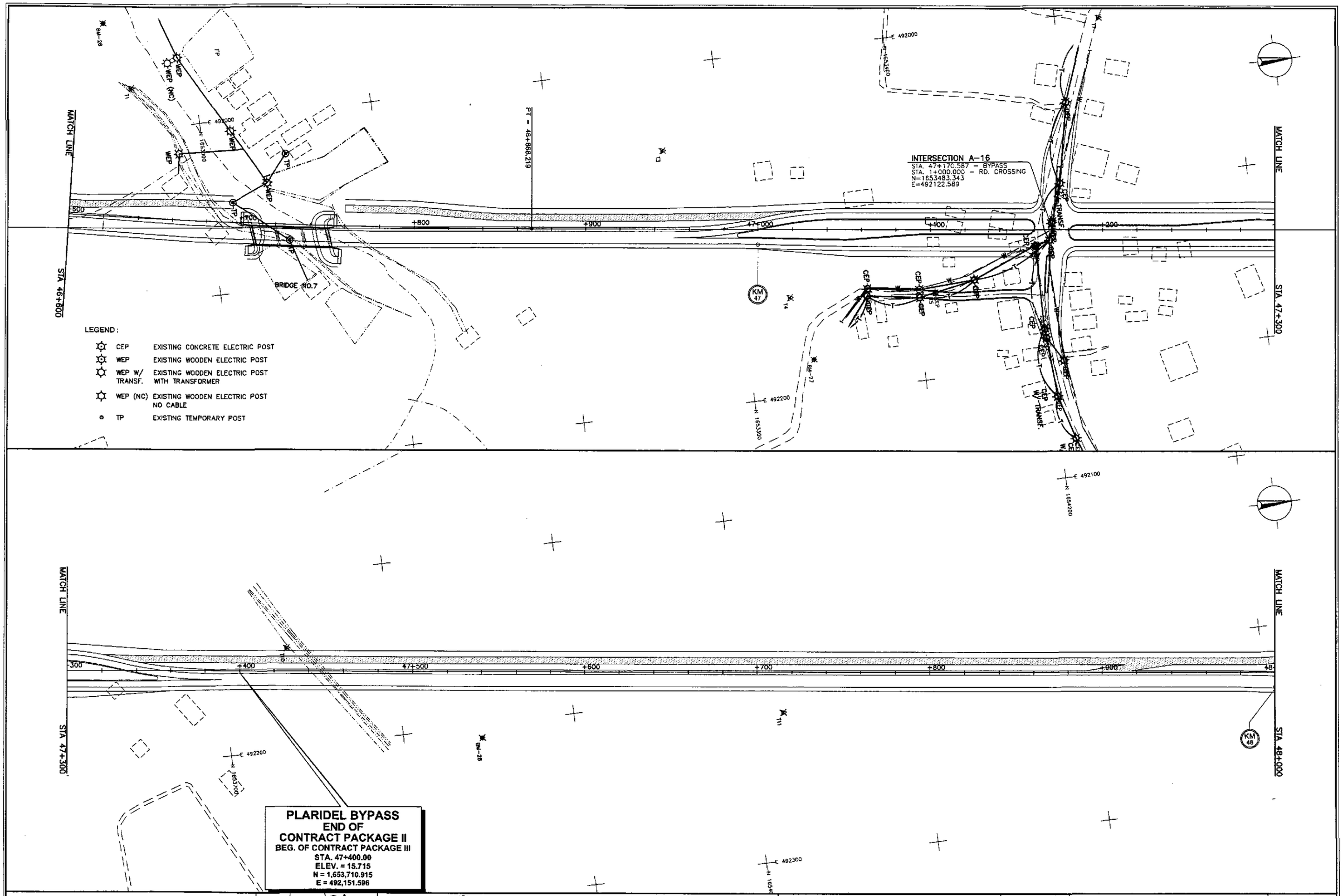

JICA
JAPAN INTERNATIONAL COOPERATION AGENCY

KATAHIRA & ENGINEERS INTERNATIONAL
YACHIYO ENGINEERING CO., LTD.

	DATE	SIGNATURE
DESIGNED	9/24/02	A. ACACIO
CHECKED	9/23/02	S. JOSE
SUBMITTED	9/24/02	M. [illegible] TEAM LEADER

REPUBLIC OF THE PHILIPPINES
DEPARTMENT OF PUBLIC WORKS AND HIGHWAYS

PJHL - PMO	BUREAU OF DESIGN		OFFICE OF THE SECRETARY	
Submitted By:	Reviewed By:	Recommended By:	Recommended By: (See cover sheet for Signature)	Approved By: (See cover sheet for Signature/Approval)
DANILO C. TRAJANO	JOSEFINA M. ALAGAR	GILBERTO S. REYES	MANUEL M. BONDAN	SIMEON A. DATUMANONG
Project Director	Chief, Highways Division	OIC, Director IV	Undersecretary	Secretary

PROJECT AND LOCATION :	SCALE :	SHEET CONTENTS :	SHEET NO. :
THE DETAILED DESIGN STUDY ON UPGRADING INTER-URBAN HIGHWAY SYSTEM ALONG THE PAN-PHILIPPINE HIGHWAY (Plaridel, Cabanatuan and San Jose Bypasses)	1:1000	UTILITY RELOCATION REFERENCE LAYOUT PLAN ALONG BYPASS STA. 46+600 - STA. 48+000	OE-01
PLARIDEL BYPASS - CONTRACT PACKAGE III	FULL SIZE A1		

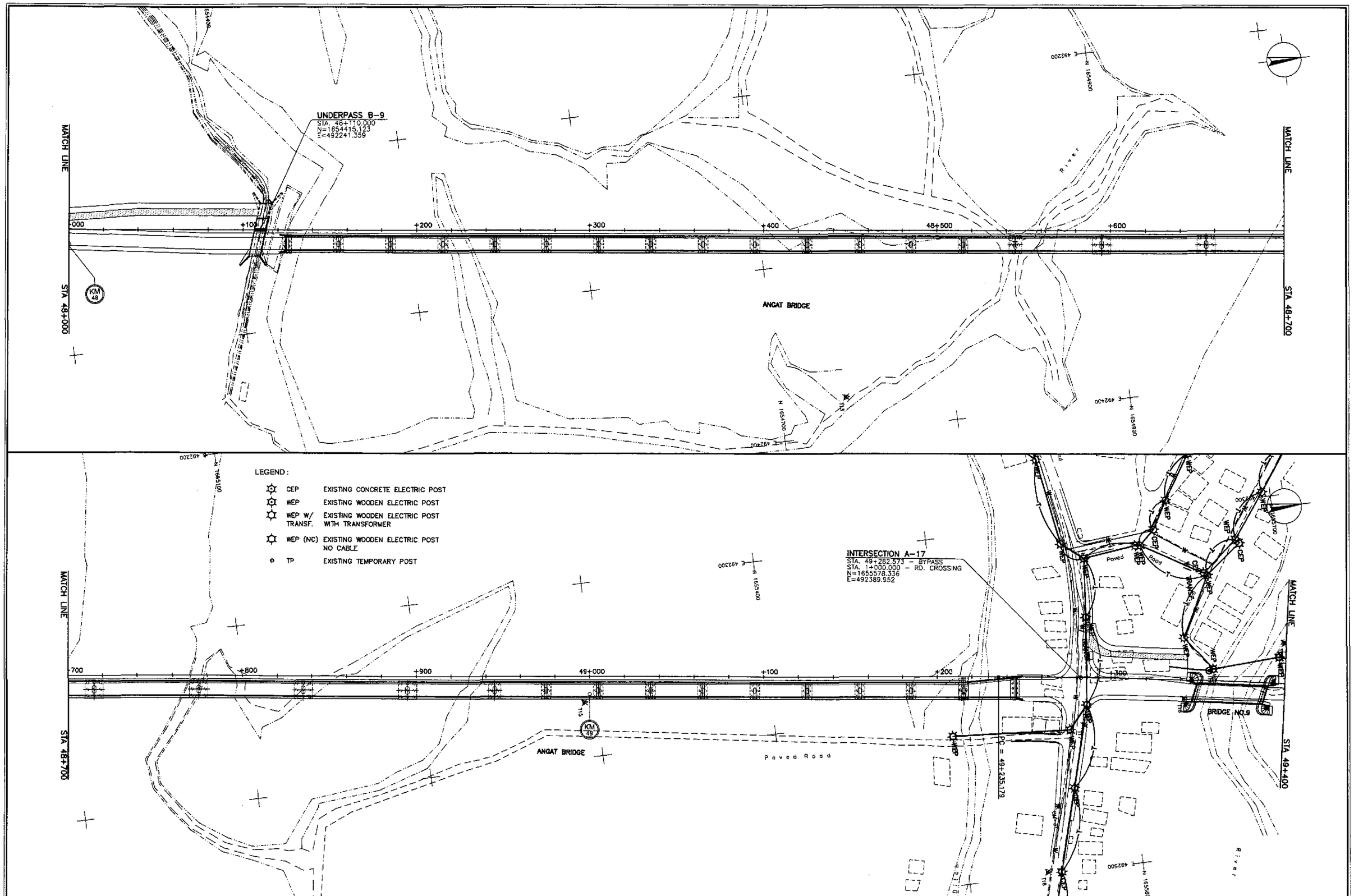

JICA
JAPAN INTERNATIONAL COOPERATION AGENCY

KATAHIRA & ENGINEERS INTERNATIONAL
YACHIYO ENGINEERING CO., LTD.

	DATE	SIGNATURE
DESIGNED	9/21/02	A. ACACIO
CHECKED	9/23/02	S. JOSE
SUBMITTED	10/14/02	TEAM LEADER

REPUBLIC OF THE PHILIPPINES
DEPARTMENT OF PUBLIC WORKS AND HIGHWAYS

PJHL – PMO	BUREAU OF DESIGN		OFFICE OF THE SECRETARY	
Submitted By:	Reviewed By:	Recommended By:	Recommended By: (See cover sheet for Signature)	Approved By: (See cover sheet for Signature/Approval)
DANILO C. TRAJANO	JOSEFINA M. ALAGAR	GILBERTO S. REYES	MANUEL M. BONOAN	SIMEON A. DATUMANONG
Project Director	Chief, Highways Division	OIC, Director IV	Undersecretary	Secretary

PROJECT AND LOCATION :
THE DETAILED DESIGN STUDY ON UPGRADING INTER-URBAN HIGHWAY SYSTEM ALONG THE PAN-PHILIPPINE HIGHWAY (Plaridel, Cabanatuan and San Jose Bypasses)
PLARIDEL BYPASS - CONTRACT PACKAGE III

SCALE : 1:1000 FULL SIZE A1

SHEET CONTENTS :
UTILITY RELOCATION REFERENCE LAYOUT PLAN
ALONG BYPASS
STA. 48+000 - STA. 49+400

SHEET NO. : OE-02

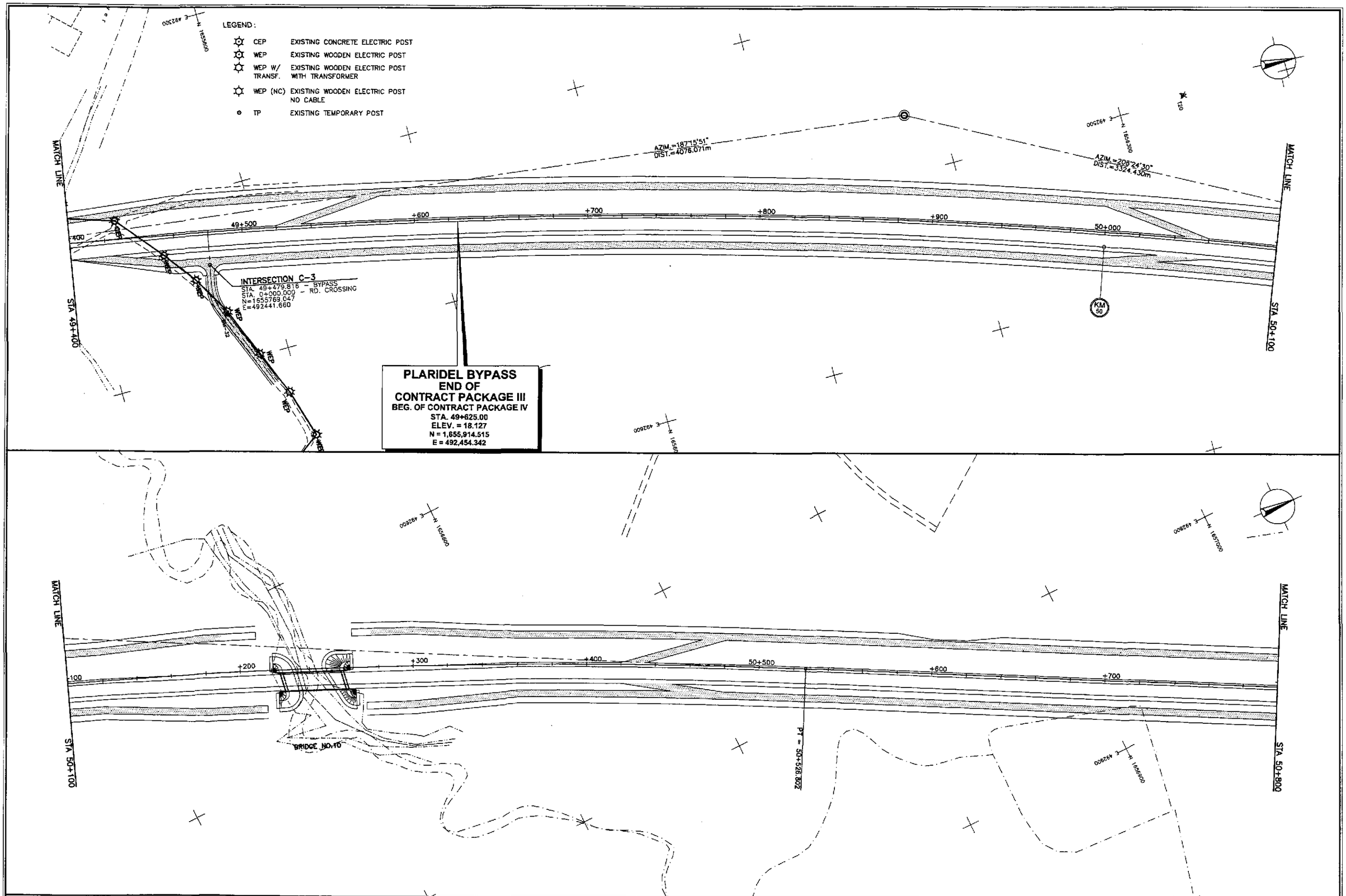

JICA
JAPAN INTERNATIONAL COOPERATION AGENCY

KEI KATAHIRA & ENGINEERS INTERNATIONAL
YEC YACHIYO ENGINEERING CO., LTD.

	DATE	SIGNATURE
DESIGNED	9/21/02	A. ACACIO
CHECKED	9/23/02	S. JOSE
SUBMITTED	10/24/02	TEAM LEADER

REPUBLIC OF THE PHILIPPINES
DEPARTMENT OF PUBLIC WORKS AND HIGHWAYS

PUHL – PMO	BUREAU OF DESIGN		OFFICE OF THE SECRETARY	
Submitted By:	Reviewed By:	Recommended By:	Recommended By: (See cover sheet for Signature)	Approved By: (See cover sheet for Signature/Approval)
DANILO C. TRAJANO	JOSEFINA M. ALAGAR	GILBERTO S. REYES	MANUEL M. BONDAN	SIMEON A. DATUMANONG
Project Director	Chief, Highways Division	OIC, Director IV	Undersecretary	Secretary

PROJECT AND LOCATION :
THE DETAILED DESIGN STUDY ON UPGRADING INTER-URBAN HIGHWAY SYSTEM ALONG THE PAN-PHILIPPINE HIGHWAY (Plaridel, Cabanatuan and San Jose Bypasses)
PLARIDEL BYPASS - CONTRACT PACKAGE III

SCALE : 1:1000 FULL SIZE A1

SHEET CONTENTS :
UTILITY RELOCATION REFERENCE LAYOUT PLAN
ALONG BYPASS
STA. 49+400 - STA. 49+625

SHEET NO. : OE-03

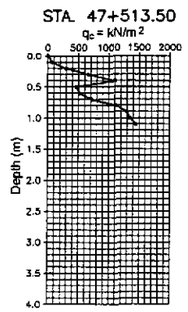

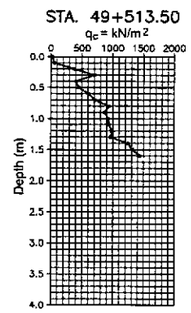

4 / OC-01 GEOTECHNICAL SURVEY - PORTABLE CONE PENETRATION TEST (CPT)

NOT TO SCALE

JICA
JAPAN INTERNATIONAL COOPERATION AGENCY
KEI KATAHIRA & ENGINEERS INTERNATIONAL
YEC YACHIYO ENGINEERING CO., LTD.

	DATE	SIGNATURE
DESIGNED	9/21/02	S. Gozo
CHECKED	9/23/02	S. Gozo
SUBMITTED	10/14/02	TEAM LEADER

REPUBLIC OF THE PHILIPPINES
DEPARTMENT OF PUBLIC WORKS AND HIGHWAYS

PJHL – PMO	BUREAU OF DESIGN		OFFICE OF THE SECRETARY	
Submitted By:	Reviewed By:	Recommended By:	Recommended By: (See cover sheet for Signature)	Approved By: (See cover sheet for Signature/Approval)
DANILO C. TRAJANO	JOSEFINA M. ALAGAR	GILBERTO S. REYES	MANUEL M. BONDAN	SIMEON A. DATUMANONG
Project Director	Chief, Highways Division	OIC, Director IV	Undersecretary	Secretary

PROJECT AND LOCATION :
THE DETAILED DESIGN STUDY ON UPGRADING INTER-URBAN HIGHWAY SYSTEM ALONG THE PAN-PHILIPPINE HIGHWAY (Plaridel, Cabanatuan and San Jose Bypasses)
PLARIDEL BYPASS - CONTRACT PACKAGE III

SCALE : NOT TO SCALE
FULL SIZE A1

SHEET CONTENTS :
PORTABLE CONE PENETRATION TEST (CPT) PROFILE
ALONG BYPASS
STA. 47+513.50 - STA. 49+513.50

SHEET NO. : OC-01