MISCELLANEOUS DRAWINGS

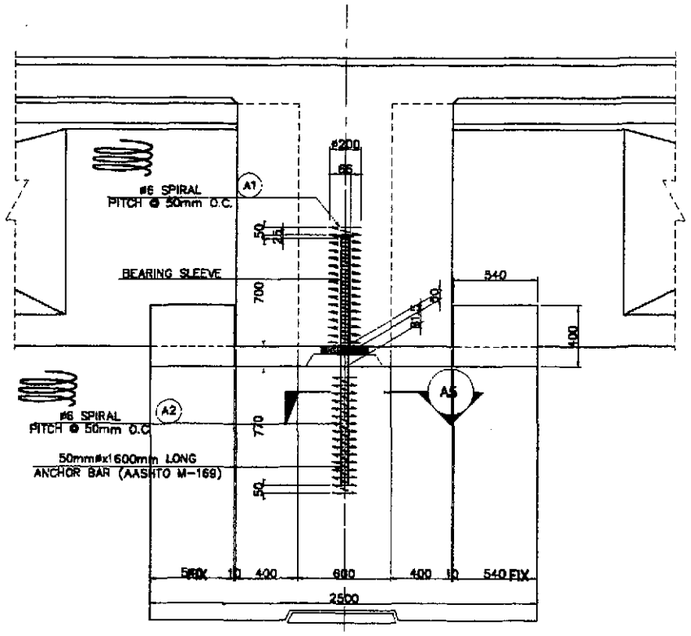

A1 LONG'L ELEVATION
SCALE 1:20

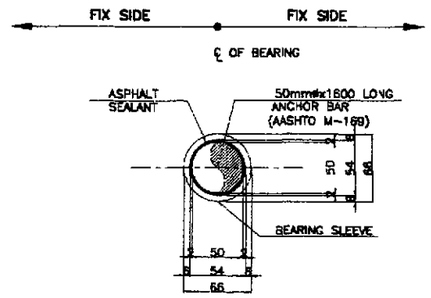

A5 TRAN'L SECTION
SCALE 1:3

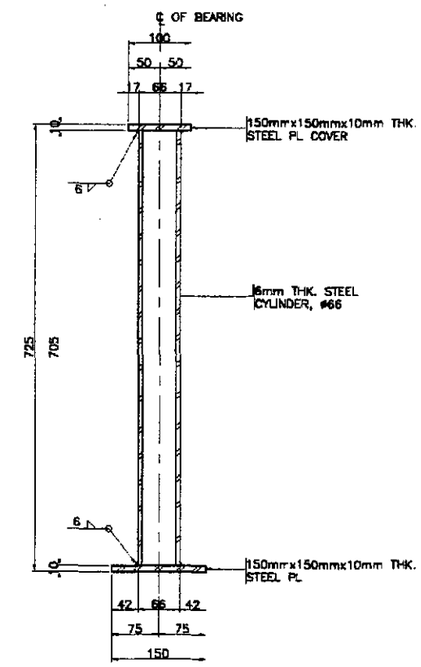

ELEVATION

NOTE :

1. ALL METALS SHOWN IN THIS DRAWING SHALL BE HOT-DIP GALVANIZED IN ACCORDANCE WITH THE SPECIFICATIONS FOR ZINC (HOT-GALVANIZE) COATING CONFORMING TO AASHTO M111 (ASTM A123) OR AASHTO M232 (ASTM A153). THE WEIGHT OF ZINC COATING SHALL AVERAGE NOT LESS THAN 365 g PER SQ. METER OF ACTUAL SURFACE AREA WITH NO INDIVIDUAL SPECIMEN HAVING A COATING OF LESS THAN 305 g PER SQ. METER.

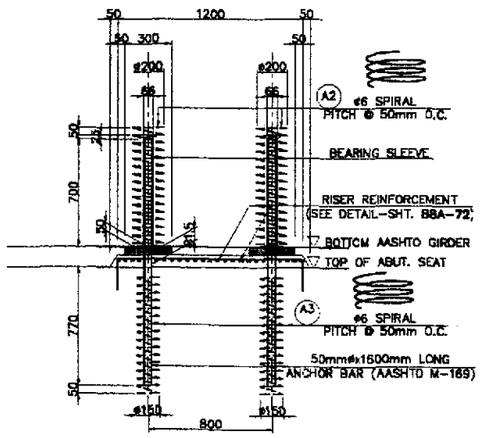

A2 TRAN'L ELEVATION
SCALE 1:20

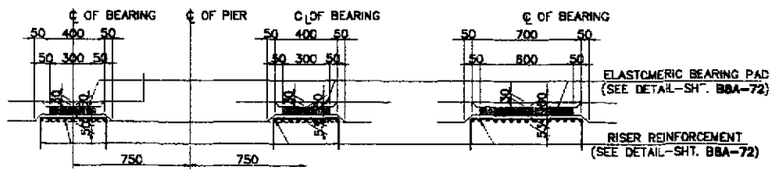

A3 LONG'L SECTION
SCALE 1:20

A4 TRAN'L SECTION
SCALE 1:20

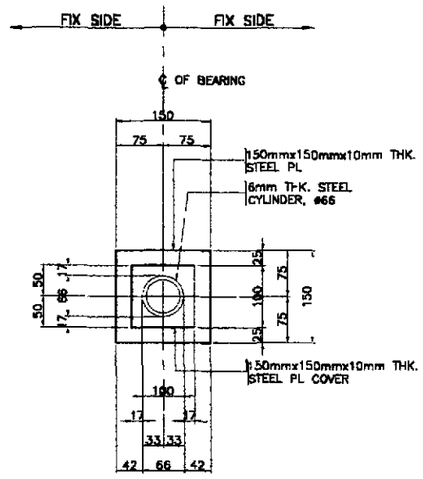

PLAN

A MISC. DETAILS FOR PIERS (FIX-FIX PIER)
SCALE AS SHOWN

B BEARING SLEEVEE DETAILS
SCALE 1:5

1 ANCHOR BAR & BEARING SLEEVE DETAILS
SCALE AS SHOWN

JICA JAPAN INTERNATIONAL COOPERATION AGENCY KEI KATAHIRA & ENGINEERS INTERNATIONAL YEC YACHIYO ENGINEERING CO., LTD.	DATE / SIGNATURE	REPUBLIC OF THE PHILIPPINES DEPARTMENT OF PUBLIC WORKS AND HIGHWAYS	PROJECT AND LOCATION :	SCALE :	SHEET CONTENTS :	SHEET NO. :
	DESIGNED 9/21/02 W. S. Nagal	PJHL – PMO: Submitted By: DANILO C. TRAJANO, Project Director BUREAU OF DESIGN: Reviewed By: ADRIANO M. DOROY, Chief, Bridges Division; Recommended By: GILBERTO S. REYES, Director IV (OIC) OFFICE OF THE SECRETARY: Recommended By: (See cover sheet for Signature) MANUEL M. BONDAN, Undersecretary; Approved By: (See cover sheet for Signature/Approval) SIMEON A. DATUJANONG, Secretary	THE DETAILED DESIGN STUDY ON UPGRADING INTER-URBAN HIGHWAY SYSTEM ALONG THE PAN-PHILIPPINE HIGHWAY (Plaridel, Cabanatuan and San Jose Bypasses) PLARIDEL BYPASS - CONTRACT PACKAGE III	AS SHOWN FULL SIZE A1	BRIDGE NO. 8 ANGAT RIVER BRIDGE ANCHOR BAR AND BEARING SLEEVE DETAILS (INITIAL STAGE)	B8A-71
	CHECKED 9/23/02 J.C. SANTOS					
	SUBMITTED 10/14/02 TEAM LEADER					

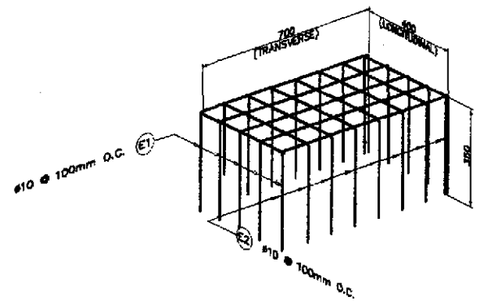

A RR-1 (BEARING PAD)
N T S

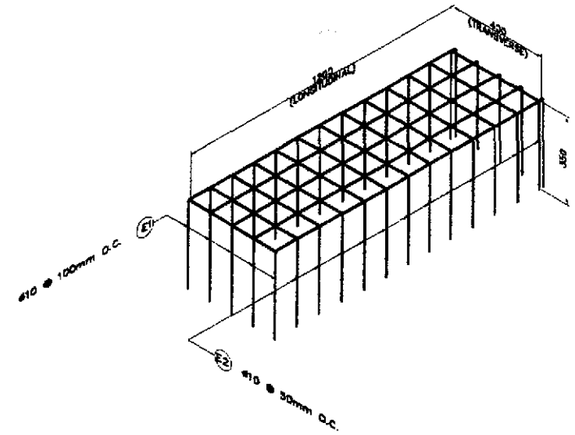

B RR-2 (DOWEL)
N T S

3 RISER REINFORCEMENT DETAILS
N T S

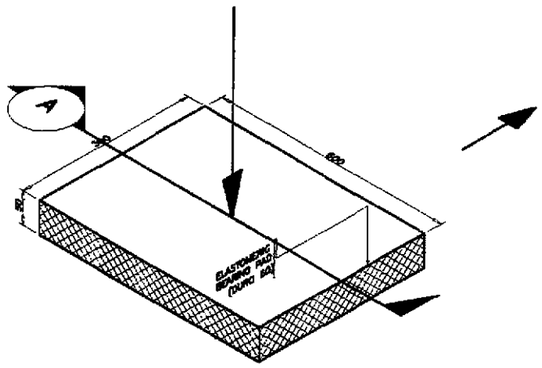

ISOMETRIC VIEW

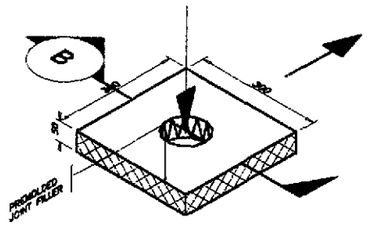

ISOMETRIC VIEW

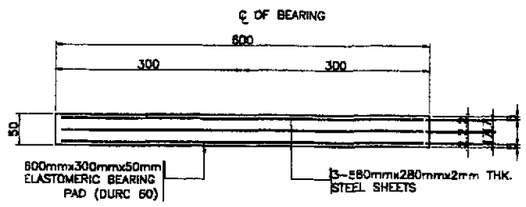

SECTION A

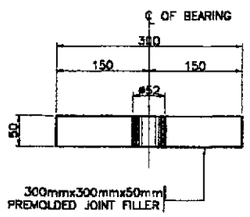

SECTION B

D BP-1 @ BEARING
N T S

D BP-2 @ ANCHOR BAR
N T S

1 ELASTOMERIC BEARING PAD DETAILS
SCALE AS SHOWN

2 PREMOLDED JOINT FILLER DETAILS
SCALE AS SHOWN

BAR BENDING DIAGRAM

A

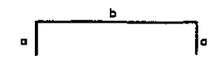

SCHEDULE OF REINFORCEMENT

LOCATION	BAR MARK	SIZE (mm)	BEND TYPE	DIMENSION(mm) OUT TO OUT a	b	c	d	e	LENGTH (mm)	NO. REQ'D.	UNIT WEIGHT (kg/m)	WEIGHT(kgs.) Grade 40	Grade 60	REMARKS
RISER (PIER FIX-FIX) GIRDER	E1	10	A	350	700				1400	40	0.616	34.50		1. ESTIMATED QUANTITY FOR ONE(1) PIER ONLY.
	E2	10	A	350	400				1100	64	0.616	43.37		
											TOTAL=	77.86	0	
RISER (PIER FIX-FIX) GIRDER-P30 ONLY	E1	10	A	350	700				1400	40	0.616	34.50		2. ESTIMATED QUANTITY FOR ONE(1) ABUT.
	E2	10	A	350	400				1100	64	0.616	43.37		
											TOTAL=	77.86	0	
RISER (PIER EXP-EXP) GIRDER	E1	10	A	350	700				1400	40	0.616	34.50		
	E2	10	A	350	400				1100	64	0.616	43.37		
											TOTAL=	77.86	0	
RISER (ABUT-1 EXP) GIRDER	E1	10	A	350	700				1400	20	0.616	17.25		
	E2	10	A	350	400				1100	32	0.616	21.68		
											TOTAL=	38.93	0	
RISER (ABUT-2 EXP) GIRDER	E1	10	A	350	700				1400	25	0.616	21.56		
	E2	10	A	350	400				1100	40	0.616	27.10		
											TOTAL=	48.66	0	
RISER (PIER FIX-FIX) ANCHOR BAR	E1	10	A	200	1350				1900	15	0.616	17.56		
	E2	10	A	200	400				1100	39	0.616	26.43		
											TOTAL=	43.98	0	
RISER (PIER FIX-FIX) ANCHOR BAR P30 ONLY	E1	10	A	200	1350				1900	20	0.616	23.41		
	E2	10	A	200	400				1100	52	0.616	35.24		
											TOTAL=	58.64	0	

THE REINFORCEMENT SHOWN ON THIS TABLE IS FOR REFERENCE ONLY. THE CONTRACTOR SHOULD CHECK AND VERIFY ALL DIMENSIONS, SIZES AND QUANTITIES OF REINFORCEMENT.

JICA
JAPAN INTERNATIONAL COOPERATION AGENCY
KEI KATAHIRA & ENGINEERS INTERNATIONAL
YEC YACHIYO ENGINEERING CO., LTD.

	DATE	SIGNATURE
DESIGNED	9/21/02	M. SUMAL
CHECKED	9/23/02	J. C. SANTOS
SUBMITTED	10/4/02	TEAM LEADER

REPUBLIC OF THE PHILIPPINES
DEPARTMENT OF PUBLIC WORKS AND HIGHWAYS

PUHL – PMO	BUREAU OF DESIGN		OFFICE OF THE SECRETARY	
Submitted By:	Reviewed By:	Recommended By:	Recommended By: (See cover sheet for Signature)	Approved By: (See cover sheet for Signature/Approval)
DANILO C. TRAJANO	ADRIANO M. DOROY	GILBERTO S. REYES	MANUEL M. BONDAN	SIMEON A. DATUMANONG
Project Director	Chief, Bridges Division	Director IV (OIC)	Undersecretary	Secretary

PROJECT AND LOCATION :
THE DETAILED DESIGN STUDY ON UPGRADING INTER-URBAN HIGHWAY SYSTEM ALONG THE PAN-PHILIPPINE HIGHWAY (Plaridel, Cabanatuan and San Jose Bypasses)
PLARIDEL BYPASS - CONTRACT PACKAGE III

SCALE : AS SHOWN
FULL SIZE A1

SHEET CONTENTS :
BRIDGE NO. 8 ANGAT RIVER BRIDGE
RISER REINFORCEMENT AND BEARING PAD DETAILS
(INITIAL STAGE)

SHEET NO. : B8A-72

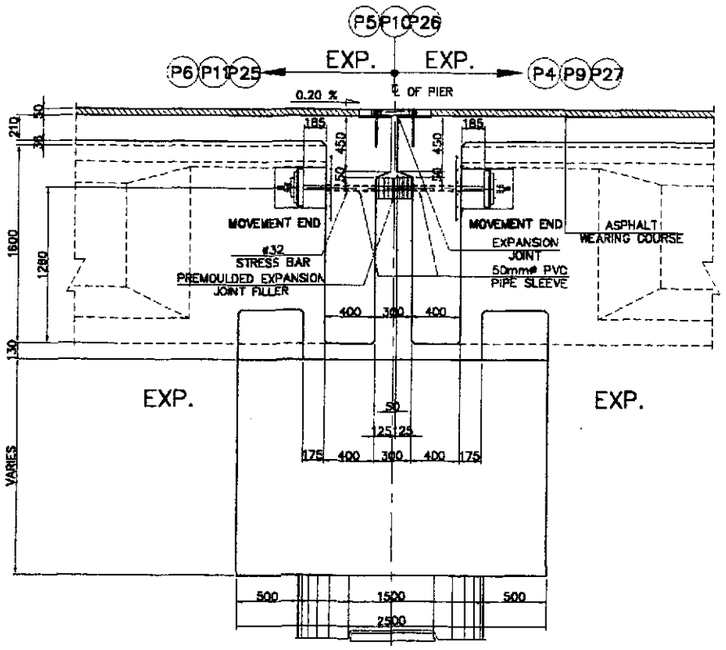

B — ELEVATION @ EXP. PIER
SCALE 1:25

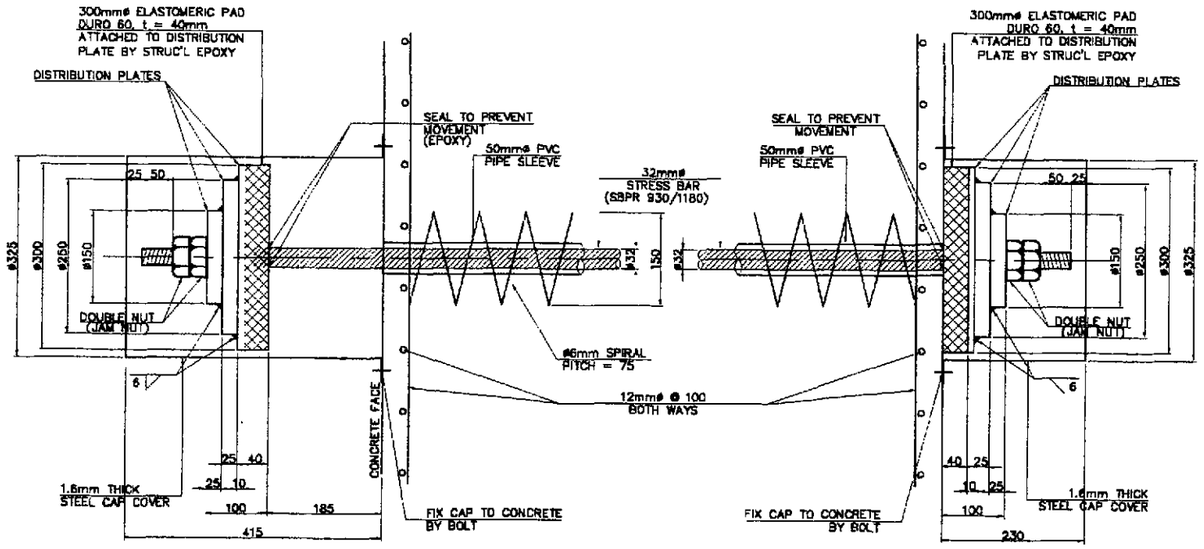

C2 — MOV. END ANCHOR DETAILS
SCALE 1:5

C1 — FIXED END ANCHOR DETAILS
SCALE 1:5

C — HORIZONTAL ANCHOR BAR DETAILS
SCALE AS SHOWN

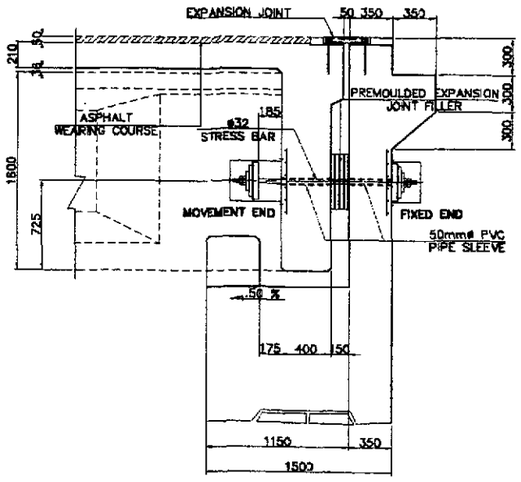

A — ELEVATION @ ABUTMENT
SCALE 1:25

NOTE :

1. ALL METALS SHOWN IN THIS DRAWING SHALL BE HOT-DIP GALVANIZED IN ACCORDANCE WITH THE SPECIFICATIONS FOR ZINC (HOT-GALVANIZE) COATING CONFORMING TO AASHTO M111 (ASTM A123) OR AASHTO M232 (ASTM A153). THE WEIGHT OF ZINC COATING SHALL AVERAGE NOT LESS THAN 365 g PER SQ. METER OF ACTUAL SURFACE AREA WITH NO INDIVIDUAL SPECIMEN HAVING A COATING OF LESS THAN 305 g PER SQ. METER.
2. THE CONTRACTOR SHALL PROVIDE A LOCKING MECHANISM ON THE NUTS TO ENSURE THAT THE GAP SHOWN IN THE DRAWINGS WILL BE KEPT AT ALL TIME.
3. NUTS SHOULD CONFORM WITH ASTM A490 WITH STRENGTH CORRESPONDING TO STRENGTH OF STRESS BAR.

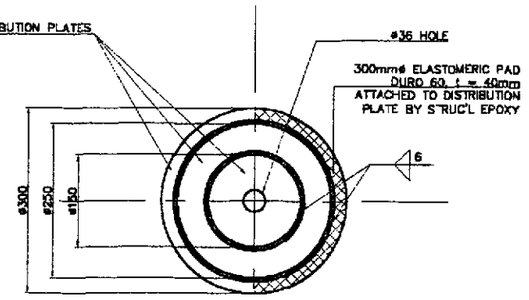

D1 — P L A N
SCALE 1:5

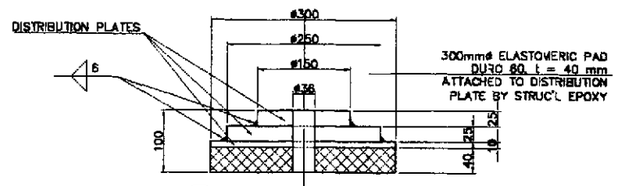

D2 — P L A N
SCALE 1:5

D — ELASTOMERIC PAD AND BEARING PLATE DETAILS
SCALE AS SHOWN

1 — RESTRAINING BAR DETAILS
SCALE AS SHOWN

JICA
JAPAN INTERNATIONAL COOPERATION AGENCY
KEI KATAHIRA & ENGINEERS INTERNATIONAL
YEO YACHIYO ENGINEERING CO., LTD.

	DATE	SIGNATURE
DESIGNED	9/21/02	L. S. NAVAL
CHECKED	9/23/02	J. C. SANTOS
SUBMITTED	10/14/02	TEAM LEADER

REPUBLIC OF THE PHILIPPINES
DEPARTMENT OF PUBLIC WORKS AND HIGHWAYS

PUHL – PMO	BUREAU OF DESIGN		OFFICE OF THE SECRETARY	
Submitted By:	Reviewed By:	Recommended By:	Recommended By: (See cover sheet for Signature)	Approved By: (See cover sheet for Signature/Approved)
DANILO C. TRAJANO	ADRIANO M. DOROY	GILBERTO S. REYES	MANUEL M. BONDAN	SIMEON A. DATUMANONG
Project Director	Chief, Bridges Division	Director IV (OIC)	Undersecretary	Secretary

PROJECT AND LOCATION :
THE DETAILED DESIGN STUDY ON UPGRADING INTER-URBAN HIGHWAY SYSTEM ALONG THE PAN-PHILIPPINE HIGHWAY (Plaridel, Cabanatuan and San Jose Bypasses)
PLARIDEL BYPASS - CONTRACT PACKAGE III

SCALE : AS SHOWN
FULL SIZE A1

SHEET CONTENTS :
BRIDGE NO. 8 ANGAT RIVER BRIDGE
RESTRAINING BAR DETAILS
(INITIAL STAGE)

SHEET NO. : B8A-73

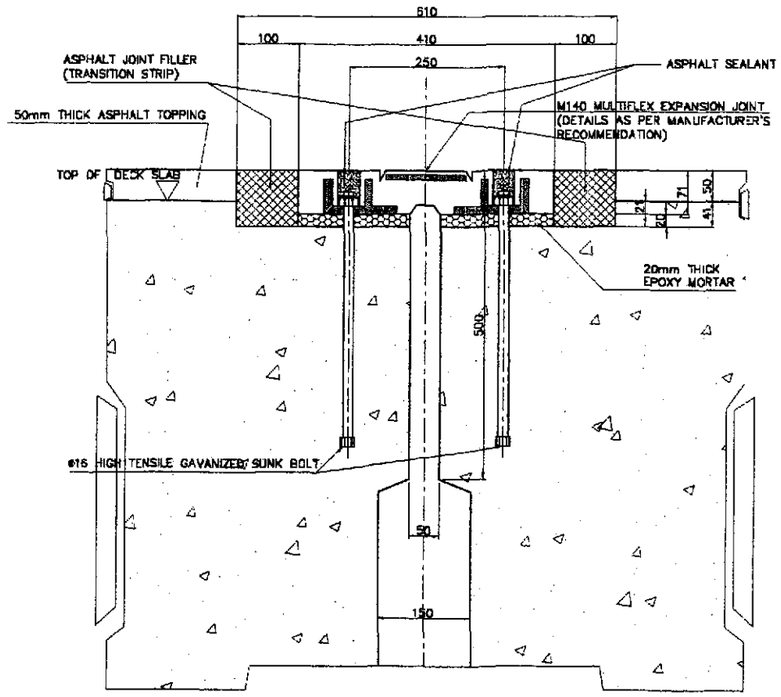

C SECTION @ PIER P5, P10 & P26 (M140 MULTIFLEX)
SCALE 1:5

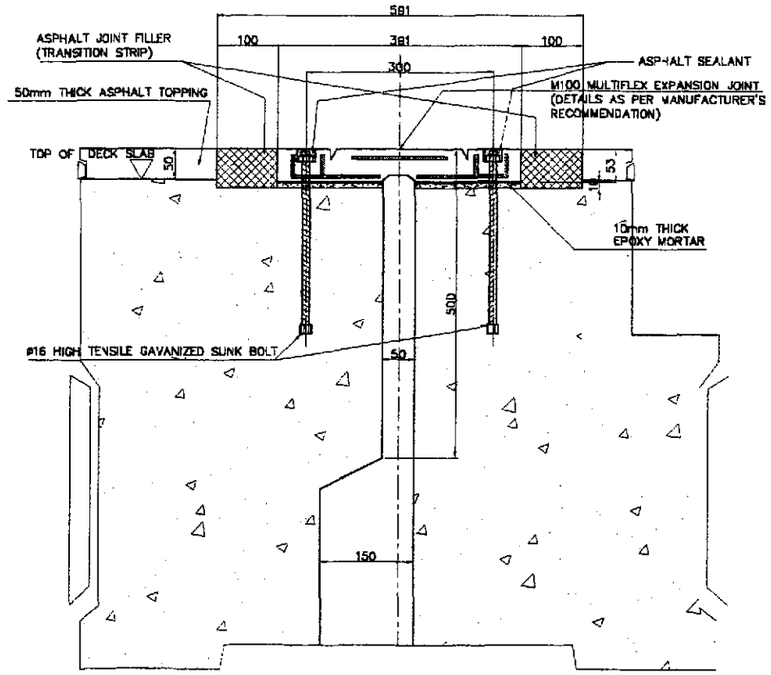

B SECTION @ ABUTMENT A1 & A2 (M100 MULTIPLEX)
SCALE 1:15

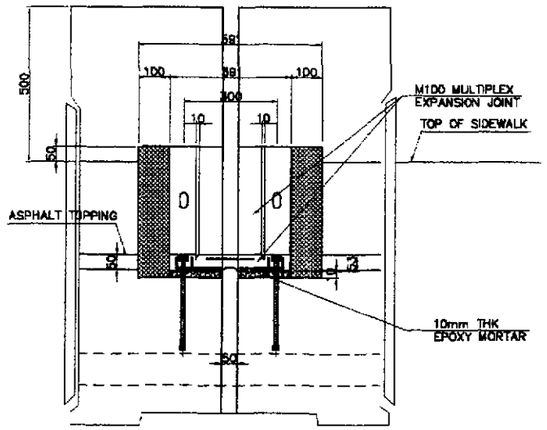

E DETAIL
SCALE 1:15

NOTES :

1. THE EXPANSION JOINT SHALL BE MULTIPLEX M140 & M100 OR EQUIVALENT.
2. THE CONTRACTOR SHALL GUARANTEE WATERTIGHTNESS OF EXPANSION JOINTS INCLUDING SIDEWALK JOINTS.
3. THE EXPANSION JOINT SHALL HAVE A 15-YEAR WARRANTY PERIOD. DAMAGES ON THE JOINTS WITHIN THIS PERIOD SHALL BE REPLACED BY THE CONTRACTOR.
4. VERIFY ACTUAL DIMENSIONS OF EXPANSION JOINT BLOCK-OUT AS PER MANUFACTURER'S RECOMMENDATION.

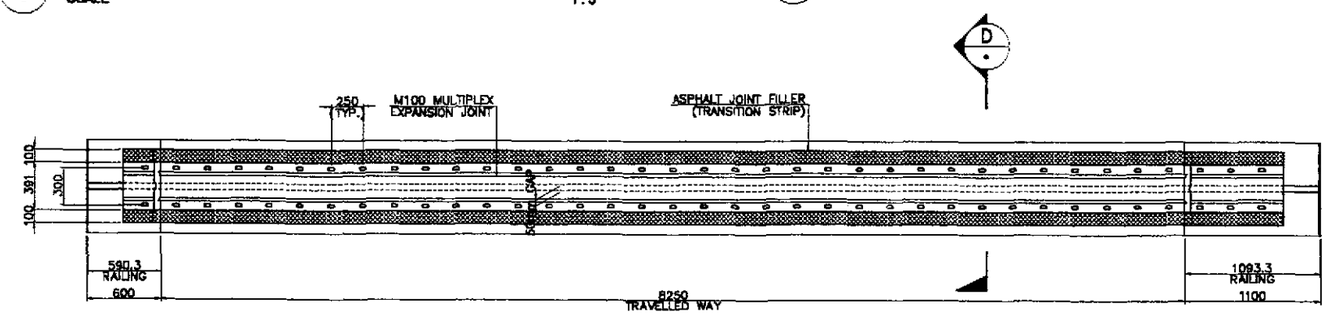

B PLAN (M100 MULTIFLEX)
SCALE 1:25

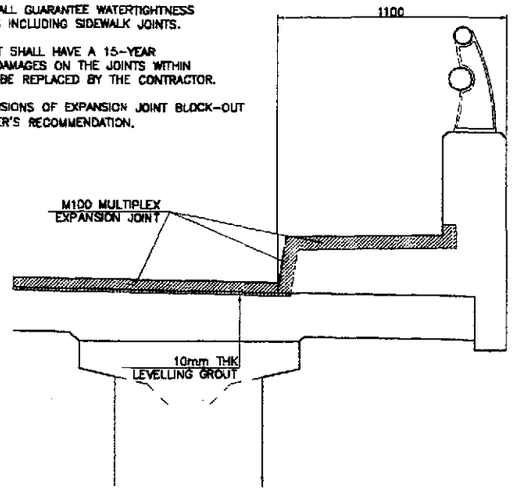

F DETAIL
SCALE 1:15

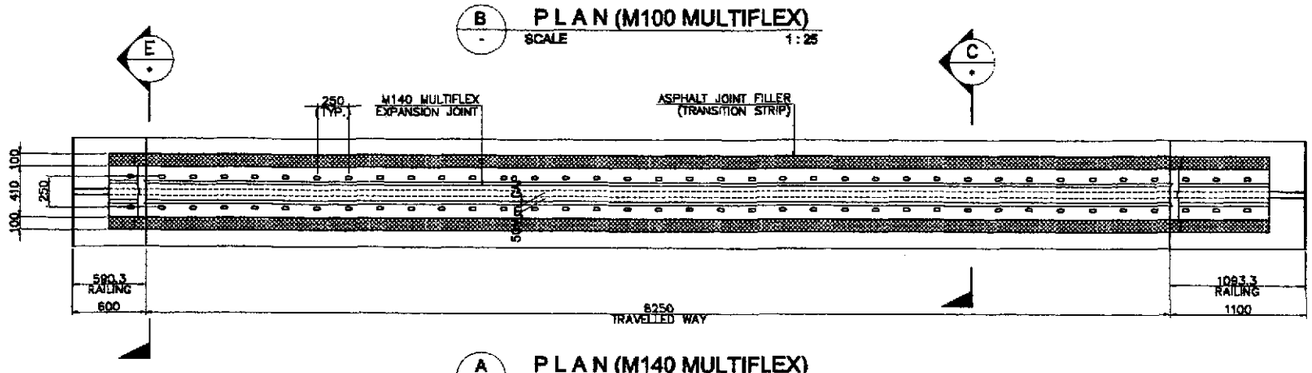

A PLAN (M140 MULTIFLEX)
SCALE 1:25

1 EXPANSION JOINT DETAILS
SCALE AS SHOWN

LOCATION	EXPANSION JOINT TYPE	MOVEMENT (mm)	LENGTH (m)
ABUT. A1	MULTIPLEX M100	±50(TOTAL=100mm)	10.20
ABUT. A2	MULTIPLEX M100	±50(TOTAL=100mm)	13.20
PIER 5	MULTIPLEX M140	±70(TOTAL=140mm)	10.20
PIER 10	MULTIPLEX M140	±70(TOTAL=140mm)	10.20
PIER 26	MULTIPLEX M140	±70(TOTAL=140mm)	10.20

JICA
JAPAN INTERNATIONAL COOPERATION AGENCY
KEI KATAHIRA & ENGINEERS INTERNATIONAL
YEC YACHIYO ENGINEERING CO., LTD.

	DATE	SIGNATURE
DESIGNED	9/21/02	M. P. NAVAL
CHECKED	9/25/02	J. C. SANTOS
SUBMITTED	10/14/02	TEAM LEADER

REPUBLIC OF THE PHILIPPINES
DEPARTMENT OF PUBLIC WORKS AND HIGHWAYS

PUHL – PMO	BUREAU OF DESIGN		OFFICE OF THE SECRETARY	
Submitted By:	Reviewed By:	Recommended By:	Recommended By: (See cover sheet for Signature)	Approved By: (See cover sheet for Signature/Approval)
DANILO C. TRAJANO	ADRIANO M. DORDY	GILBERTO S. REYES	MANUEL M. BONDAN	SIMEON A. DATUMANONG
Project Director	Chief, Bridge Division	Director IV (OIC)	Undersecretary	Secretary

PROJECT AND LOCATION :
THE DETAILED DESIGN STUDY ON UPGRADING INTER-URBAN HIGHWAY SYSTEM ALONG THE PAN-PHILIPPINE HIGHWAY (Plaridel, Cabanatuan and San Jose Bypasses)
PLARIDEL BYPASS - CONTRACT PACKAGE III

SCALE : AS SHOWN
FULL SIZE A1

SHEET CONTENTS :
BRIDGE NO. 8 ANGAT RIVER BRIDGE
EXPANSION JOINT DETAILS
(INITIAL STAGE)

SHEET NO. : B8A-74

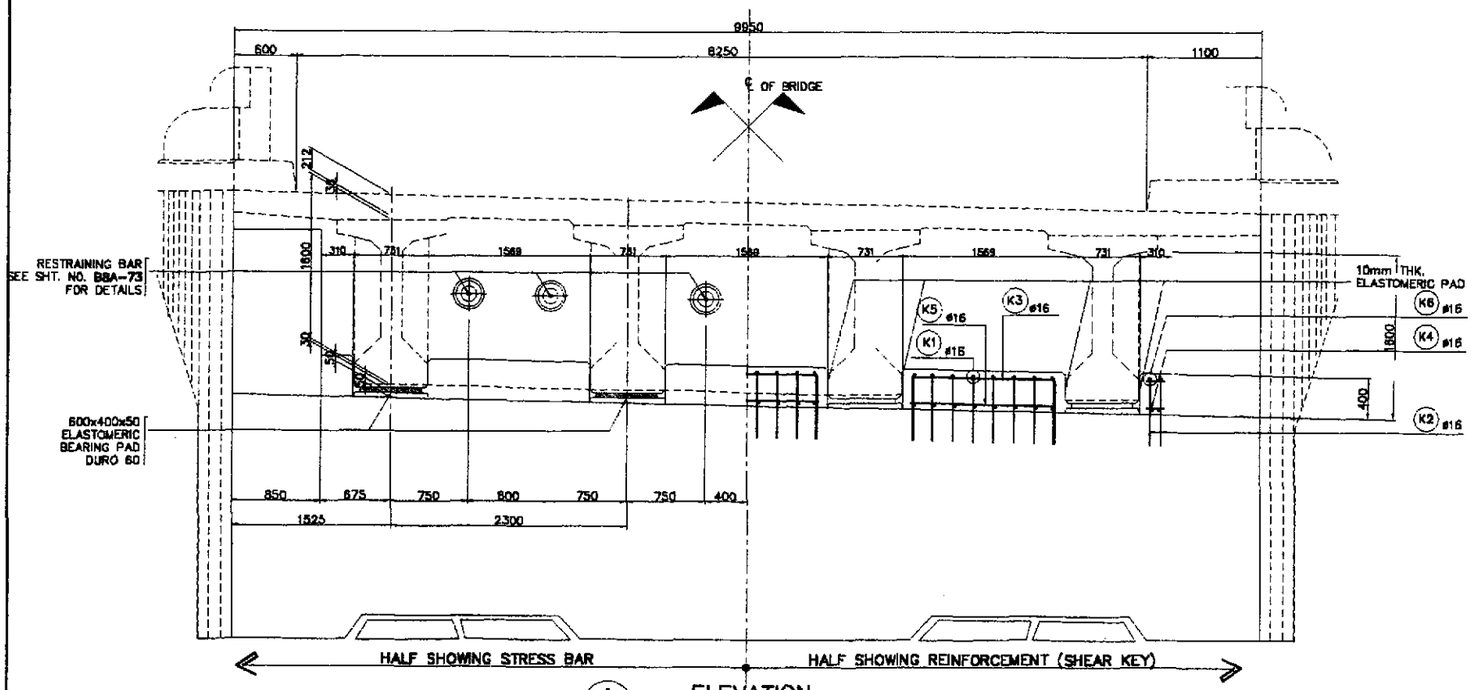

A ELEVATION
SCALE 1:30

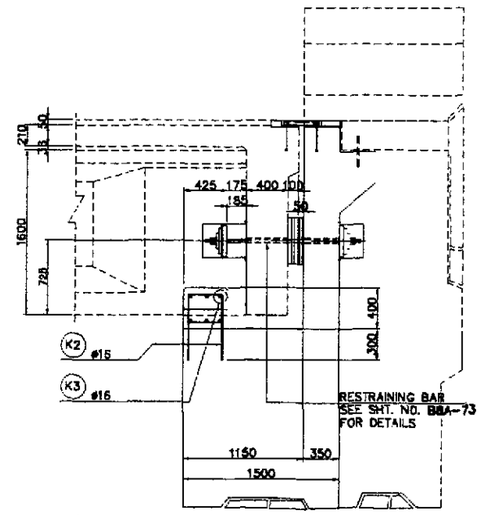

C SECTION
SCALE 1:30

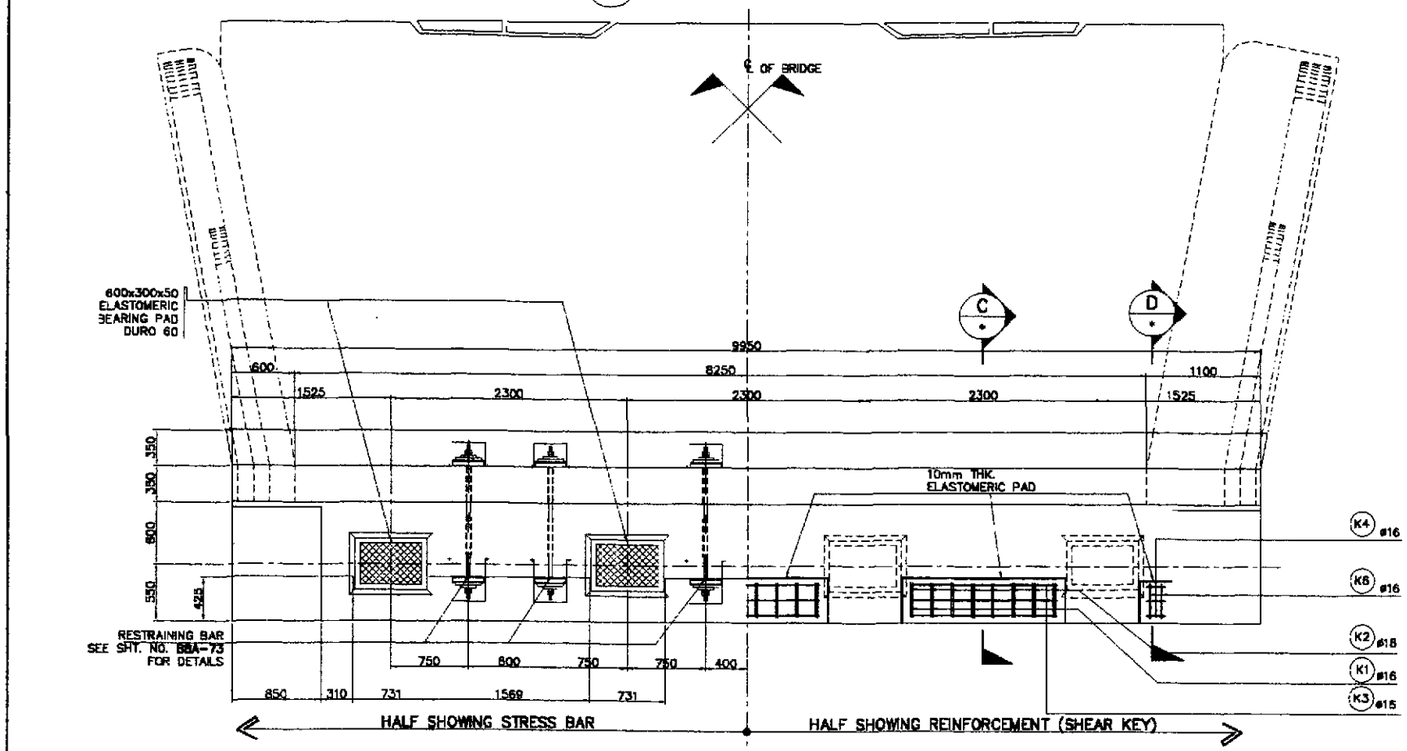

B PLAN
SCALE 1:30

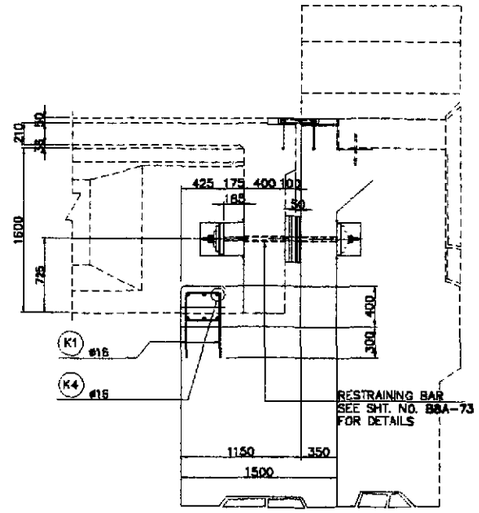

D SECTION
SCALE 1:30

1 DETAIL OF SHEAR KEY RESTRAINIG BAR @ ABUTMENT (A1)
SCALE AS SHOWN

JICA
JAPAN INTERNATIONAL COOPERATION AGENCY
KEI KATAHIRA & ENGINEERS INTERNATIONAL
YEC YACHIYO ENGINEERING CO., LTD.

	DATE	SIGNATURE
DESIGNED	9/21/02	N. S. NAVAL
CHECKED	9/23/02	J. C. SANTOS
SUBMITTED	10/14/02	TEAM LEADER

REPUBLIC OF THE PHILIPPINES
DEPARTMENT OF PUBLIC WORKS AND HIGHWAYS

PJHL - PMO	BUREAU OF DESIGN		OFFICE OF THE SECRETARY	
Submitted By:	Reviewed By:	Recommended By:	Recommended By: (See cover sheet for Signature)	Approved By: (See cover sheet for Signature/Approval)
DANILO C. TRAJANO	ADRIANO M. DOROY	GILBERTO S. REYES	MANUEL M. BONDAN	SIMEON A. DATUMANONG
Project Director	Chief, Bridges Division	Director IV (OIC)	Undersecretary	Secretary

PROJECT AND LOCATION :
THE DETAILED DESIGN STUDY ON UPGRADING INTER-URBAN HIGHWAY SYSTEM ALONG THE PAN-PHILIPPINE HIGHWAY (Plaridel, Cabanatuan and San Jose Bypasses)
PLARIDEL BYPASS - CONTRACT PACKAGE III

SCALE : AS SHOWN
FULL SIZE A1

SHEET CONTENTS :
BRIDGE NO. 8 ANGAT RIVER BRIDGE
DETAILS OF SHEAR KEY AND RESTRAINING BAR (ABUT. A1)
(INITIAL STAGE)

SHEET NO. : B8A-75

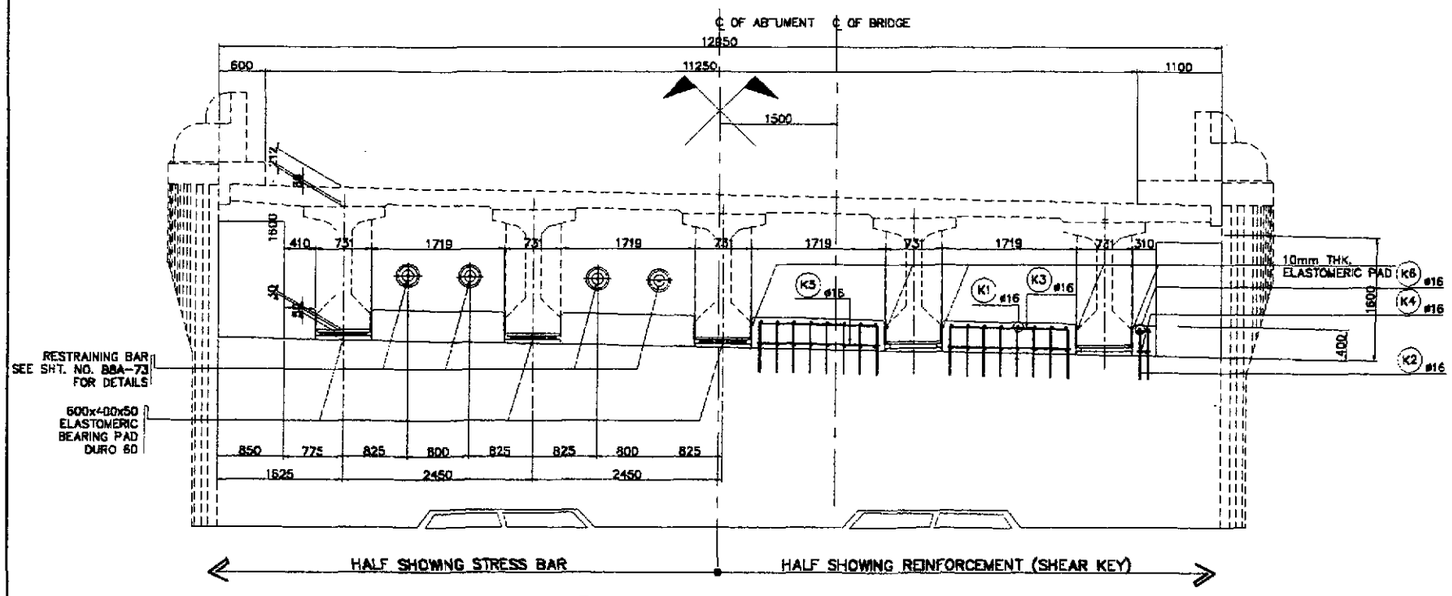

A ELEVATION
SCALE 1:40

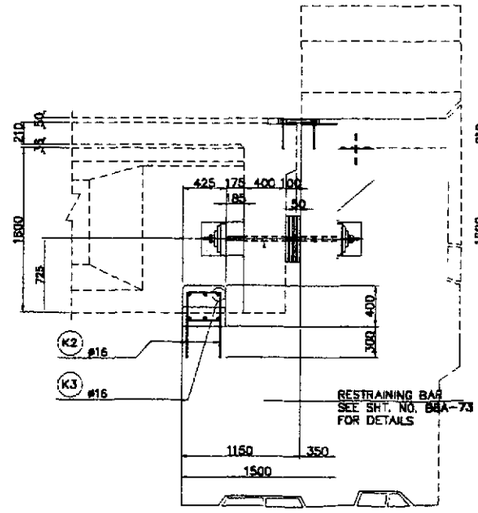

C SECTION
SCALE 1:30

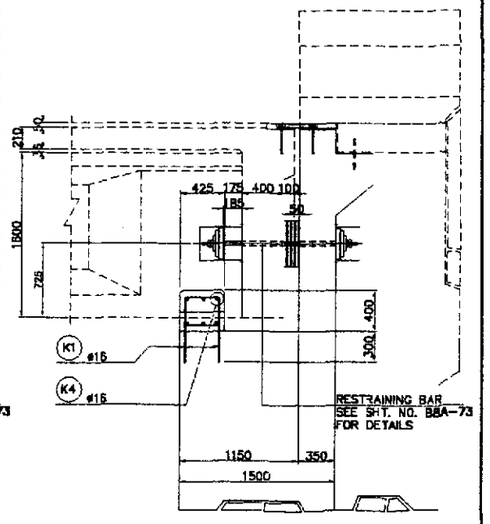

D SECTION
SCALE 1:30

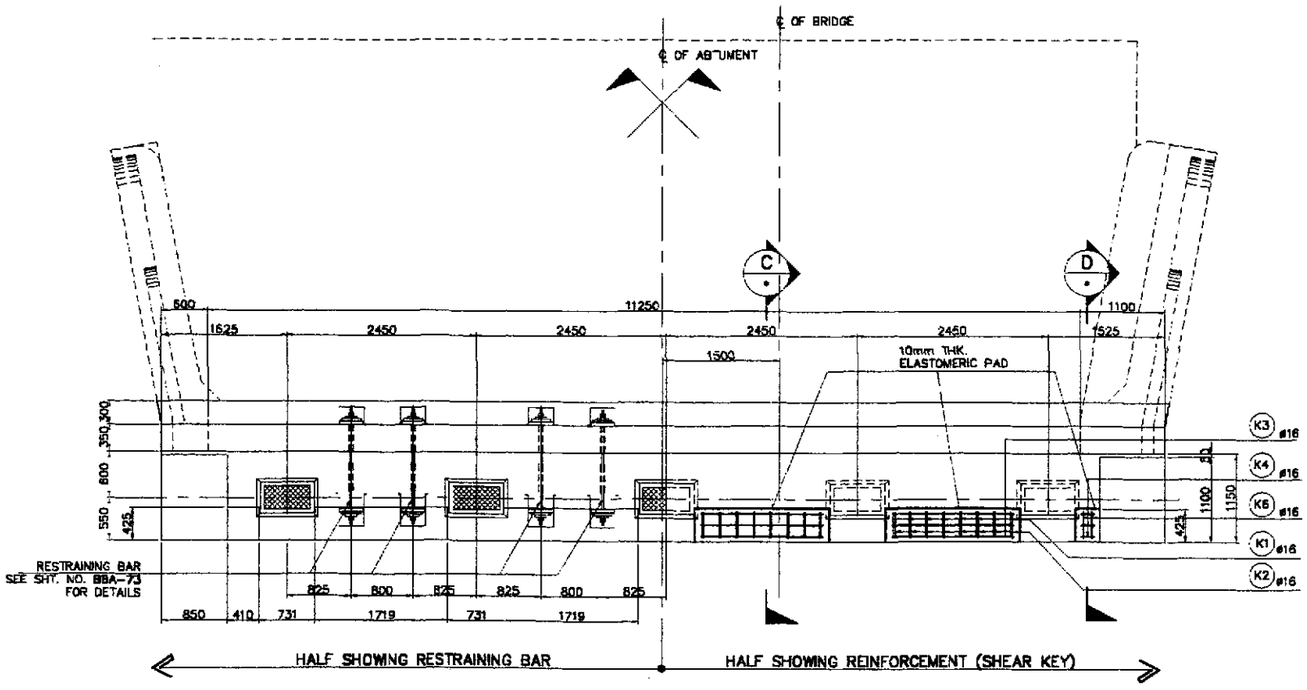

B PLAN
SCALE 1:40

BAR BENDING DIAGRAM

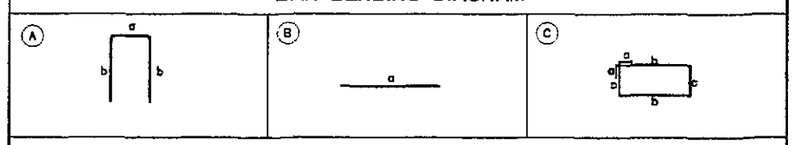

SCHEDULE OF REINFORCEMENT

LOCATION	BAR MARK	SIZE (mm)	BEND TYPE	DIMENSION(mm) OUT TO OUT a	b	c	d	e	LENGTH (mm)	NO. REQ'D.	UNIT WEIGHT (kg/m)	WEIGHT(kgs.) Grade 40	Grade 60
SHEAR KEY & END BLOCK @ PIER EXP.	K1	16	A	650	290				1590	72	1.578	181	
	K2	16	A	650	290				1590	50	1.578	125	
	K3	16	B	1470					1470	48	1.578	111	
	K4	16	B	1060					1060	40	1.578	67	
	K5	16	C	150	690	300			2280	18	1.578	65	
	K5a	16	C	150	540	300			2280	18	1.578	56	
	K6	16	C	150	2600	300			6100	10	1.578	96	
										TOTAL WEIGHT =		701	0
SHEAR KEY & END BLOCK @ PIER FIXED	K1	20	A	850	290				1990	36	2.466		177
	K2	20	A	850	290				1990	50	2.466		245
	K3	16	B	1470					1470	24	1.578	56	
	K4	16	B	1060					1060	40	1.578	67	
	K5	16	C	150	540	300			1980	36	1.578	112	
	K6	16	C	150	2600	300			6100	10	1.578	96	
										TOTAL WEIGHT =		331	422
SHEAR KEY @ ABUTMENT	K1	16	A	650	290				1590	18	1.578	45	
	K2	16	A	650	400				1700	6	1.578	16	
	K3	16	B	1470					1470	18	1.578	42	
	K4	16	B	460					460	12	1.578	9	
	K5	16	C	150	400	300			850	18	1.578	24	
	K6	16	C	150	400	300			850	6	1.578	8	
										TOTAL WEIGHT =		144	0

THE REINFORCEMENT SHOWN ON THIS TABLE IS FOR REFERENCE ONLY. THE CONTRACTOR SHOULD CHECK AND VERIFY ALL DIMENSIONS, SIZES AND QUANTITIES OF REINFORCEMENT.

1 DETAIL OF SHEAR KEY RESTRAINIG BAR @ ABUTMENT (A2)
SCALE AS SHOWN

JICA
JAPAN INTERNATIONAL COOPERATION AGENCY
KEI KATAHIRA & ENGINEERS INTERNATIONAL
YEC YACHIYO ENGINEERING CO., LTD.

	DATE	SIGNATURE
DESIGNED	9/21/02	N. S. NAVAL
CHECKED	9/23/02	J. C. SANTOS
SUBMITTED	10/4/02	TEAM LEADER

REPUBLIC OF THE PHILIPPINES
DEPARTMENT OF PUBLIC WORKS AND HIGHWAYS

FUHL – PMO	BUREAU OF DESIGN		OFFICE OF THE SECRETARY	
Submitted By:	Reviewed By:	Recommended By:	Recommended By: (See cover sheet for Signature)	Approved By: (See cover sheet for Signature/Approval)
DANILO C. TRAJANO, Project Director	ADRIANO M. DOROY, Chief, Bridges Division	GILBERTO S. REYES, Director IV (OIC)	MANUEL M. BONDAN, Undersecretary	SIMEON A. DATUMANONG, Secretary

PROJECT AND LOCATION :
THE DETAILED DESIGN STUDY ON UPGRADING INTER-URBAN HIGHWAY SYSTEM ALONG THE PAN-PHILIPPINE HIGHWAY (Plaridel, Cabanatuan and San Jose Bypasses)
PLARIDEL BYPASS - CONTRACT PACKAGE III

SCALE : AS SHOWN
FULL SIZE A1

SHEET CONTENTS :
BRIDGE NO. 8 ANGAT RIVER BRIDGE
DETAILS OF SHEAR KEY AND RESTRAINING BAR (ABUT. A2)
(INITIAL STAGE)

SHEET NO. : B8A-76

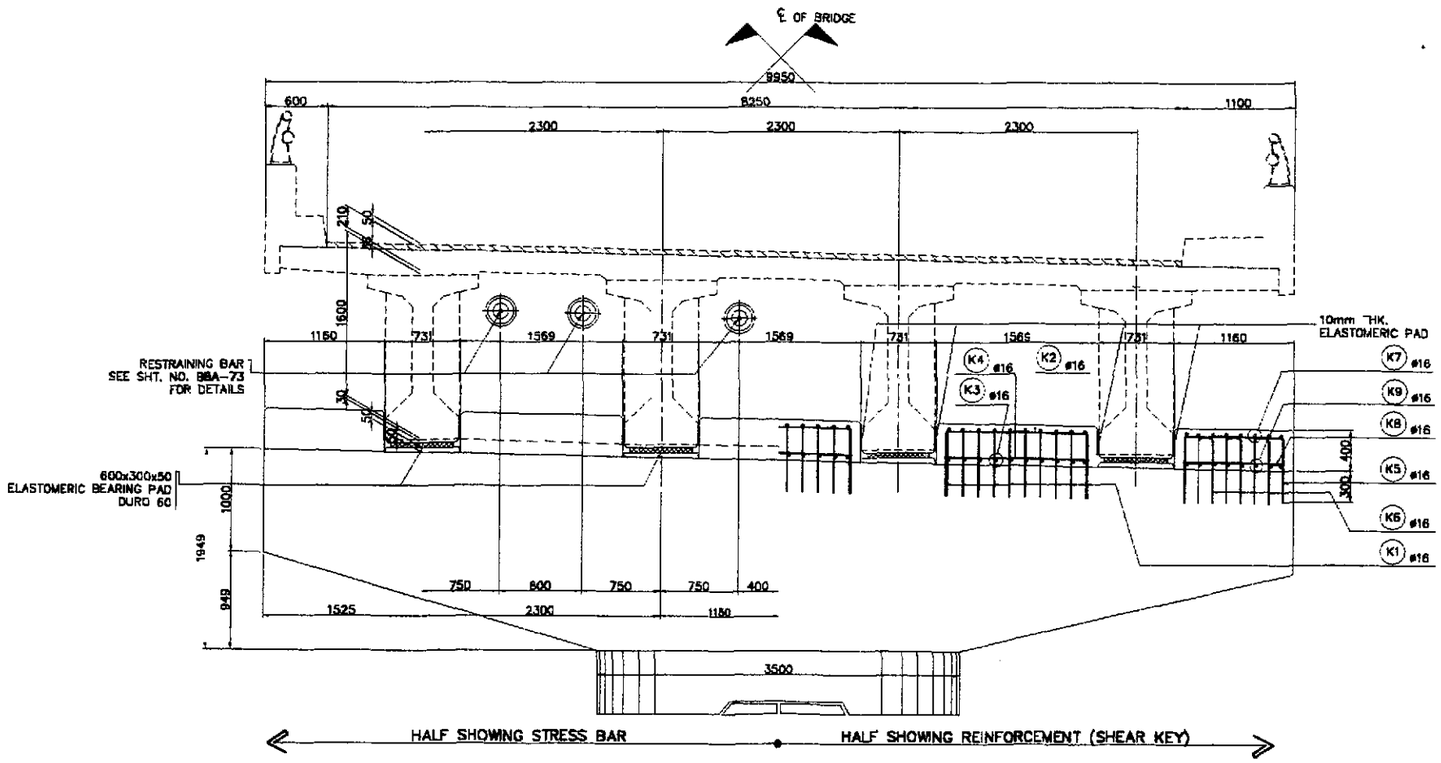

A - ELEVATION
SCALE 1:30

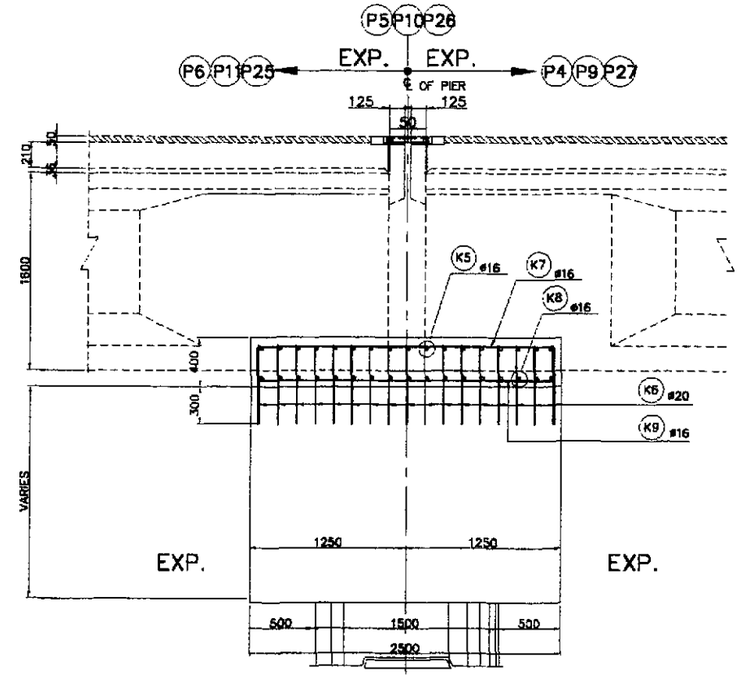

C - SECTION
SCALE 1:25

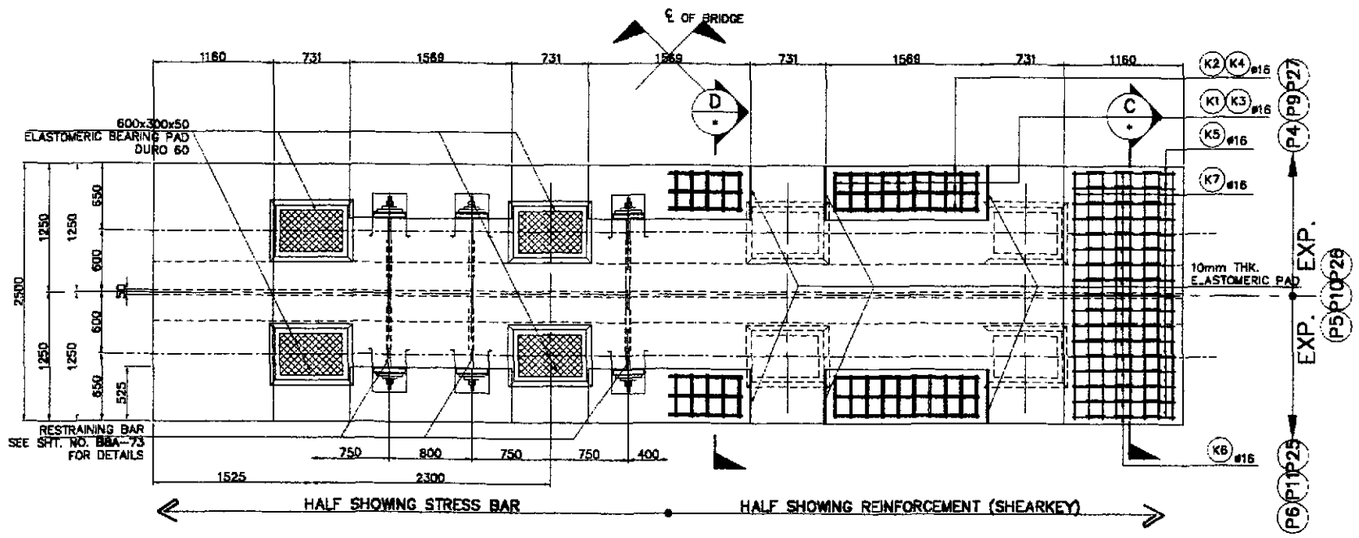

B - P L A N
SCALE 1:30

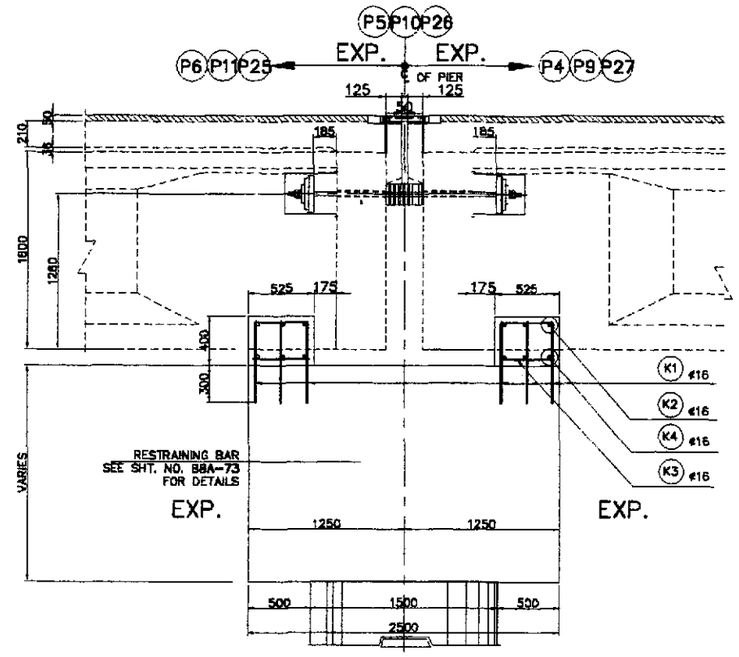

D - SECTION
SCALE 1:25

1 - DETAIL OF SHEAR KEY & RESTRAINING BAR (P5, P10 & P26)
SCALE AS SHOWN

JICA JAPAN INTERNATIONAL COOPERATION AGENCY KEI KATAHIRA & ENGINEERS INTERNATIONAL YEC YACHIYO ENGINEERING CO., LTD.	DATE / SIGNATURE DESIGNED 9/21/02 N. S. NAVAL CHECKED 9/23/02 C. SANTOS SUBMITTED 10/14/02 D. RIGOR TEAM LEADER	REPUBLIC OF THE PHILIPPINES DEPARTMENT OF PUBLIC WORKS AND HIGHWAYS PJHL – PMO: Submitted By: DANILO C. TRAJANO, Project Director BUREAU OF DESIGN: Reviewed By: ADRIANO M. DOROY, Chief, Bridges Division; Recommended By: GILBERTO S. REYES, Director IV (OIC) OFFICE OF THE SECRETARY: Recommended By: (See cover sheet for Signature) MANUEL M. BONDAN, Undersecretary; Approved By: (See cover sheet for Signature/Approval) SIMEON A. DATUMANONG, Secretary	PROJECT AND LOCATION : THE DETAILED DESIGN STUDY ON UPGRADING INTER-URBAN HIGHWAY SYSTEM ALONG THE PAN-PHILIPPINE HIGHWAY (Plaridel, Cabanatuan and San Jose Bypasses) PLARIDEL BYPASS - CONTRACT PACKAGE III	SCALE : AS SHOWN FULL SIZE A1	SHEET CONTENTS : BRIDGE NO. 8 ANGAT RIVER BRIDGE DETAILS OF SHEAR KEY AND RESTRAINING BAR (P5, P10 & P26) (INITIAL STAGE)	SHEET NO. : B8A-77

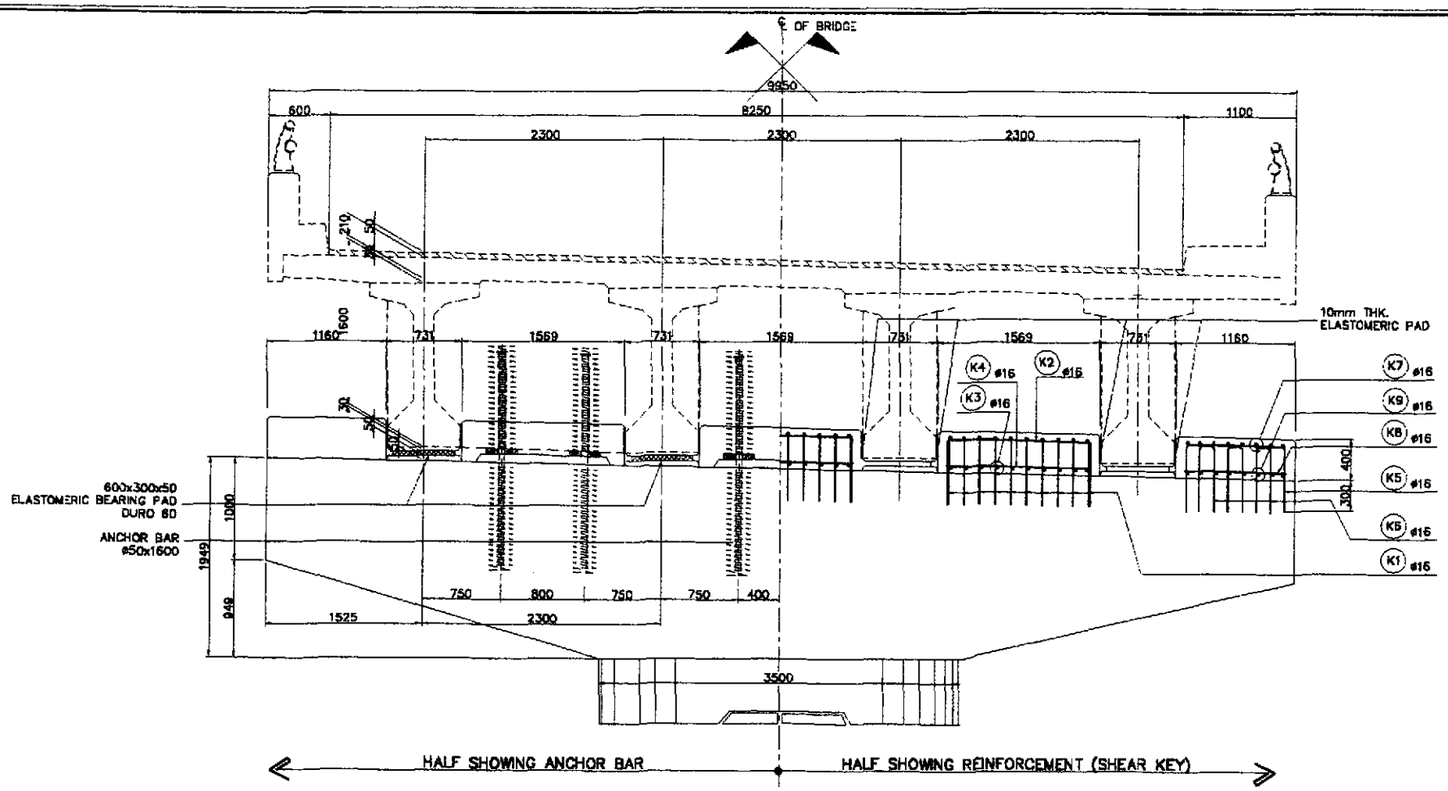

A ELEVATION
SCALE 1:30

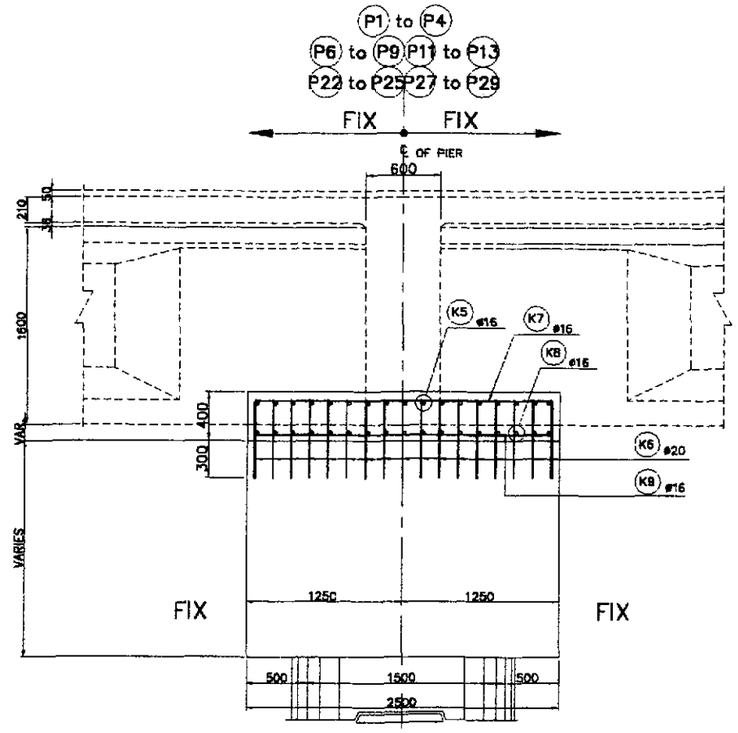

C SECTION
SCALE 1:25

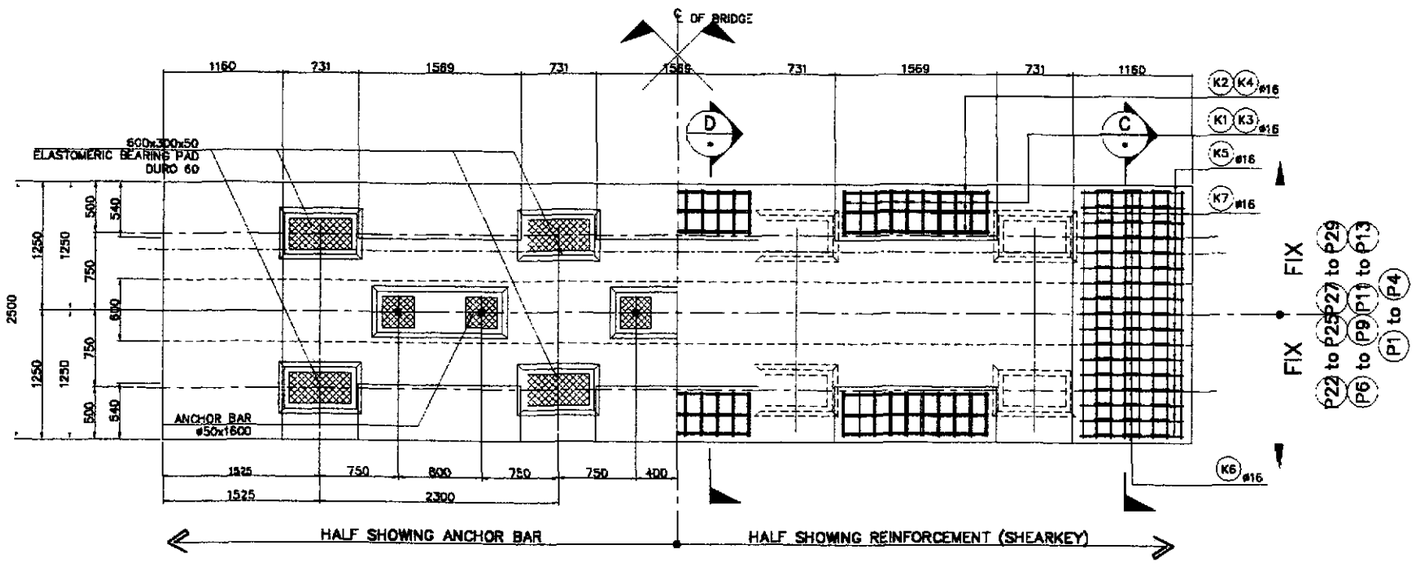

B PLAN
SCALE 1:30

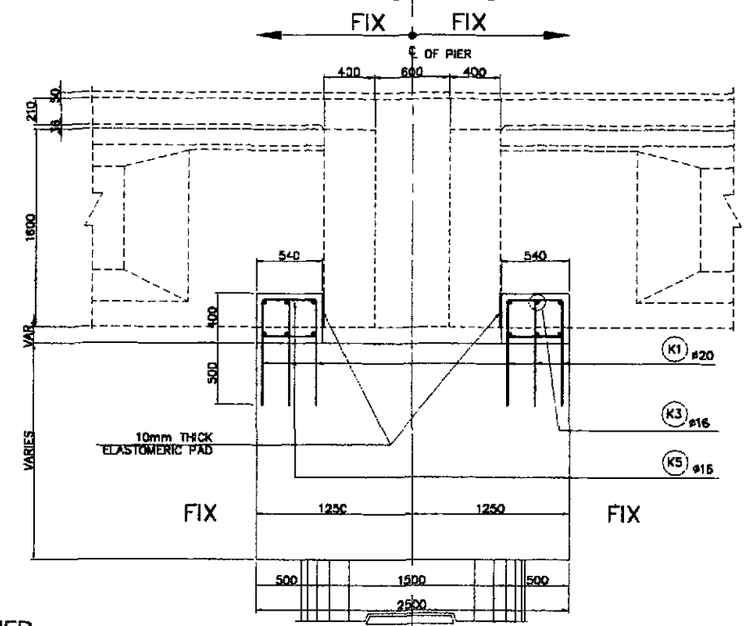

D SECTION
SCALE 1:25

1 DETAIL OF SHEAR KEY & ANCHOR BAR AT PIER
(P1-P4, P6-P9,P11-P13, P22-P25 & P27-P29)
SCALE AS SHOWN

JICA
JAPAN INTERNATIONAL COOPERATION AGENCY
KEI KATAHIRA & ENGINEERS INTERNATIONAL
YEO YACHIYO ENGINEERING CO., LTD.

	DATE	SIGNATURE
DESIGNED	9/21/02	M. U. NAVIDAD
CHECKED	9/23/02	J. C. SANTOS
SUBMITTED	10/14/02	TEAM LEADER

REPUBLIC OF THE PHILIPPINES
DEPARTMENT OF PUBLIC WORKS AND HIGHWAYS

FUHL – PMO	BUREAU OF DESIGN		OFFICE OF THE SECRETARY	
Submitted By:	Reviewed By:	Recommended By:	Recommended By: (See cover sheet for Signature)	Approved By: (See cover sheet for Signature/Approval)
DANILO C. TRAJANO	ADRIANO M. DOROY	GILBERTO S. REYES	MANUEL M. BONDAN	SIMEON A. DATUMANONG
Project Director	Chief, Bridges Division	Director IV (OIC)	Undersecretary	Secretary

PROJECT AND LOCATION :
THE DETAILED DESIGN STUDY ON UPGRADING INTER-URBAN HIGHWAY SYSTEM ALONG THE PAN-PHILIPPINE HIGHWAY (Plaridel, Cabanatuan and San Jose Bypasses)
PLARIDEL BYPASS - CONTRACT PACKAGE III

SCALE :
AS SHOWN
FULL SIZE A1

SHEET CONTENTS :
BRIDGE NO. 8 ANGAT RIVER BRIDGE
DETAILS OF SHEAR KEY & ANCHOR BAR (P1-P4,P6-P9,P11-P13,P22-P25 & P27-P29)
(INITIAL STAGE)

SHEET NO. :
B8A-78

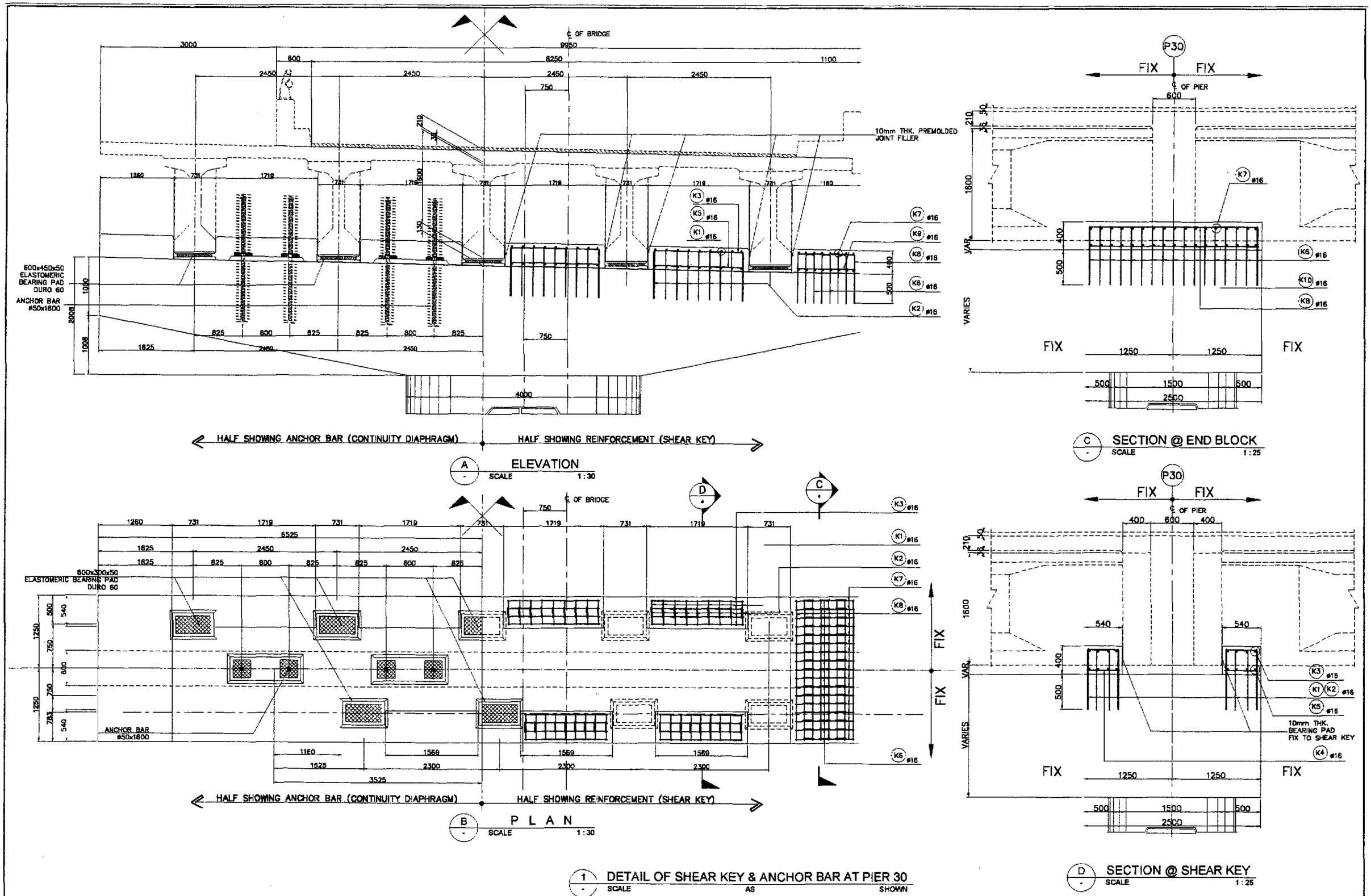

1 DETAIL OF SHEAR KEY & ANCHOR BAR AT PIER 30
SCALE AS SHOWN

JICA
JAPAN INTERNATIONAL COOPERATION AGENCY
KEI KATAHIRA & ENGINEERS INTERNATIONAL
YEC YACHIYO ENGINEERING CO., LTD.

	DATE	SIGNATURE
DESIGNED	9/21/02	
CHECKED	9/23/02	
SUBMITTED	10/14/02	TEAM LEADER

REPUBLIC OF THE PHILIPPINES
DEPARTMENT OF PUBLIC WORKS AND HIGHWAYS

PUHL – PMO	BUREAU OF DESIGN		OFFICE OF THE SECRETARY	
Submitted By:	Reviewed By:	Recommended By:	Recommended By: (See cover sheet for Signature)	Approved By: (See cover sheet for Signature/Approval)
DANILO C. TRAJANO, Project Director	ADRIANO M. DOROY, Chief, Bridges Division	GILBERTO S. REYES, Director IV (OIC)	MANUEL M. BONGAN, Undersecretary	SIMEON A. DATUMANONG, Secretary

PROJECT AND LOCATION :
THE DETAILED DESIGN STUDY ON UPGRADING INTER-URBAN HIGHWAY SYSTEM ALONG THE PAN-PHILIPPINE HIGHWAY (Plaridel, Cabanatuan and San Jose Bypasses)
PLARIDEL BYPASS - CONTRACT PACKAGE III

SCALE : AS SHOWN
FULL SIZE A1

SHEET CONTENTS :
BRIDGE NO. 8 ANGAT RIVER BRIDGE
DETAILS OF SHEAR KEY AND AND ANCHOR BAR (P30)
(INITIAL STAGE)

SHEET NO. : B8A-79

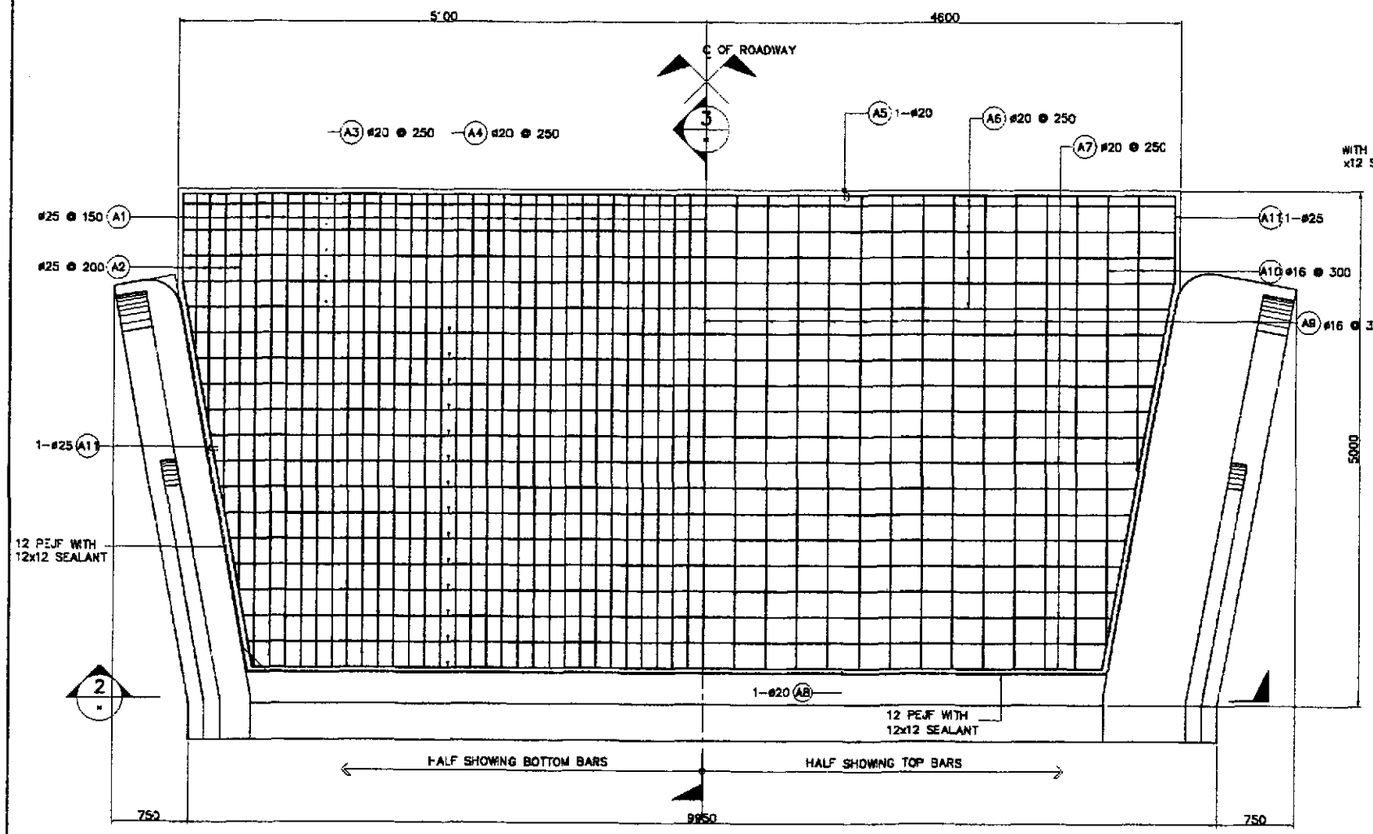

1 PLAN
SCALE 1:30

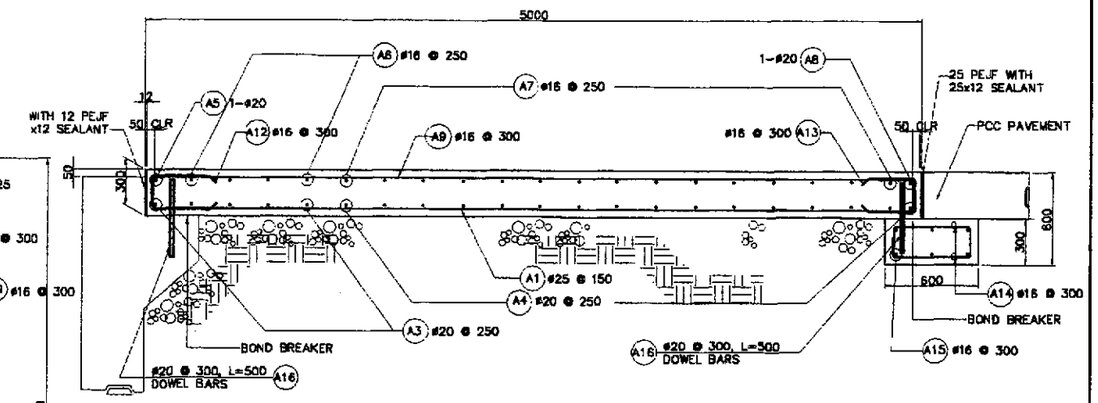

3 SECTION
SCALE 1:20

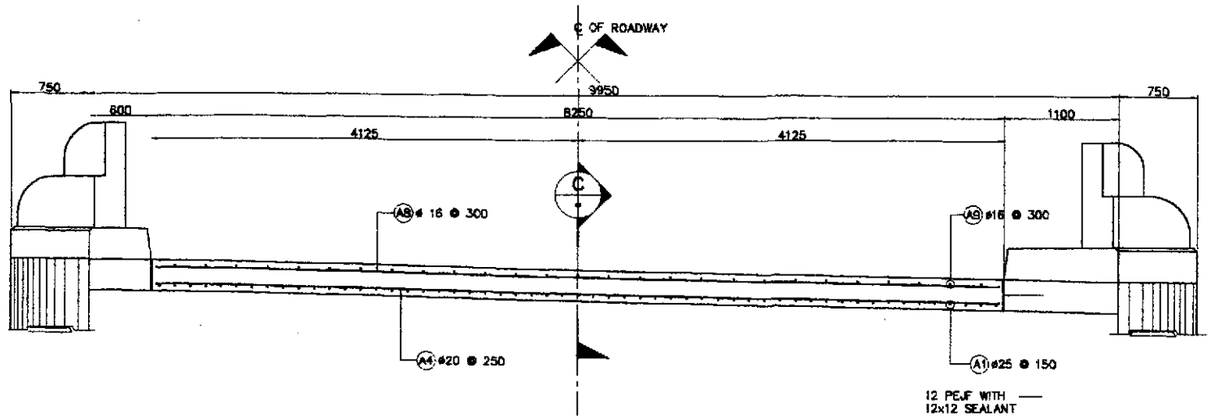

2 SECTION
SCALE 1:30

BAR BENDING DIAGRAM

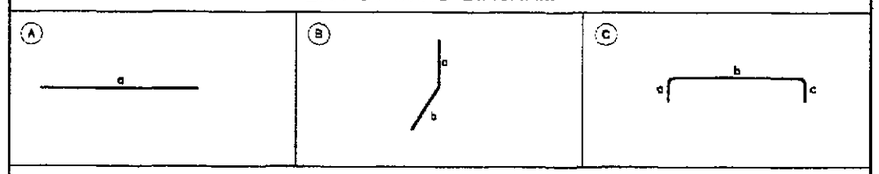

SCHEDULE OF REINFORCEMENT

LOCATION	BAR MARK	SIZE (mm)	BEND TYPE	DIMENSION(mm) OUT TO OUT a	b	c	d	e	f	LENGTH (mm)	NO. REQ'D.	UNIT WEIGHT (kg/m)	WEIGHT (Kgs.) GRADE 40	GRADE 60
APPROACH SLAB (ABUT. A1)	A1	25	4	4900						4900	55	3.853		1038
	A2	25	4	4450 max 1950 min						3200	8	3.853		99
	A3	20	4	9600						9600	5	2.466		118
	A4	20	4	9500 max 8140 min						8820	16	2.466		348
	A5	20	4	9600						9600	1	2.466		24
	A6	16	4	9600						9600	4	1.578	61	
	A7	16	4	9500 max 8140 min						8820	15	1.578	209	
	A8	20	4	8140						8140	1	2.466		20
	A9	16	4	4900						4900	28	1.578	217	
	A10	16	4	4450 max 2850 min						3650	4	1.578	23	
	A11	25	B	1000	3950					4950	4	3.853		76
	A12	16	C	300	200	300				800	28	1.578	35	
	A13	16	C	300	200	300				800	33	1.578	42	
	A14	16	C	200	500	200				900	66	1.578	94	
	A15	16	4	9600						9600	6	1.578	91	
	A16	20	4	500						500	61	2.466		75
											TOTAL WEIGHT =		772	1723

THE REINFORCEMENT SHOWN ON THIS TABLE IS FOR REFERENCE ONLY. THE CONTRACTOR SHOULD CHECK AND VERIFY ALL DIMENSIONS, SIZES AND QUANTITIES OF REINFORCEMENT.

JICA
JAPAN INTERNATIONAL COOPERATION AGENCY
KATAHIRA & ENGINEERS INTERNATIONAL
YACHIYO ENGINEERING CO., LTD.

	DATE	SIGNATURE
DESIGNED	9/21/02	
CHECKED	9/23/02	
SUBMITTED	9/27/02	TEAM LEADER

REPUBLIC OF THE PHILIPPINES
DEPARTMENT OF PUBLIC WORKS AND HIGHWAYS

PUHL – PMO	BUREAU OF DESIGN		OFFICE OF THE SECRETARY	
Submitted By:	Reviewed By:	Recommended By:	Recommended By: (See cover sheet for Signature)	Approved By: (See cover sheet for Signature/Approval)
DANILO C. TRAJANO Project Director	ADRIANO M. DOROY Chief, Bridges Division	GILBERTO S. REYES Director IV (OIC)	MANUEL M. BONDAN Undersecretary	SIMEON A. DATUMANONG Secretary

PROJECT AND LOCATION :
THE DETAILED DESIGN STUDY ON UPGRADING INTER-URBAN HIGHWAY SYSTEM ALONG THE PAN-PHILIPPINE HIGHWAY (Plaridel, Cabanatuan and San Jose Bypasses)
PLARIDEL BYPASS - CONTRACT PACKAGE III

SCALE :
AS SHOWN
FULL SIZE A1

SHEET CONTENTS :
BRIDGE NO. 8 ANGAT RIVER BRIDGE
APPROACH SLAB REINF. DETAILS (ABUTMENT A1)
(INITIAL STAGE)

SHEET NO. :
B8A-80

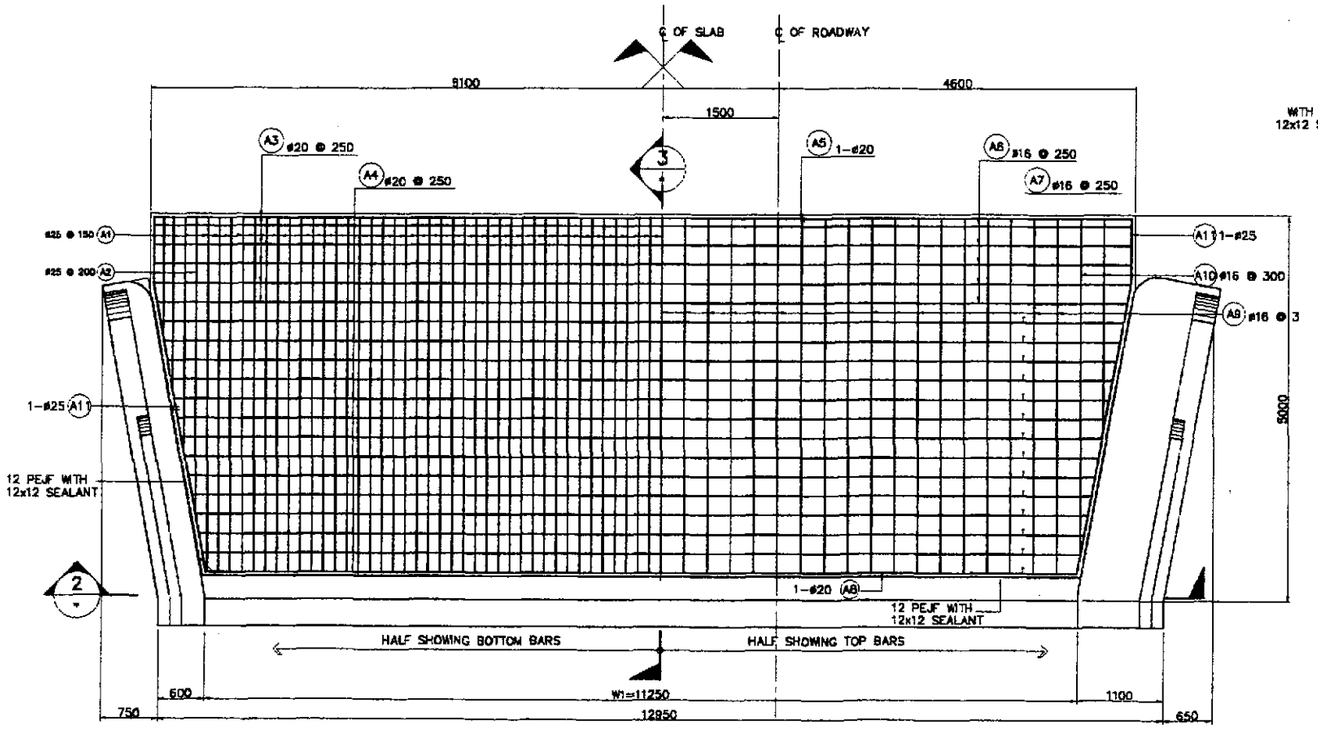

1 PLAN
SCALE 1:40

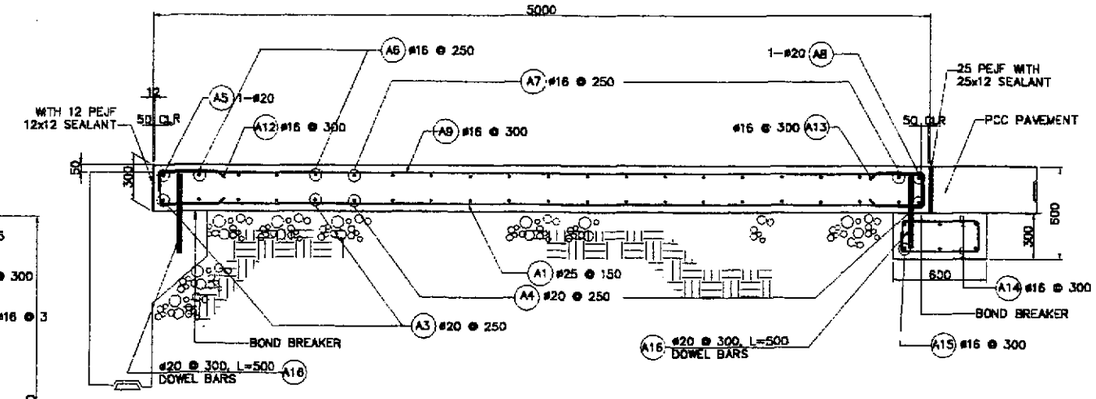

3 SECTION
SCALE 1:20

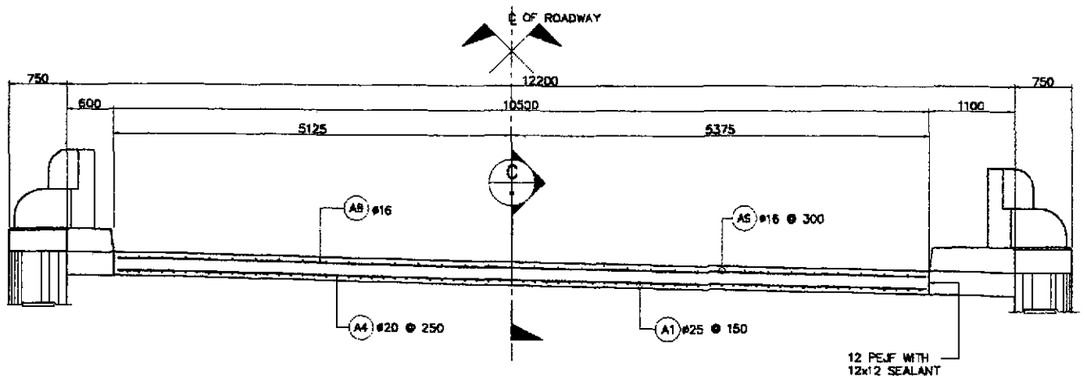

2 SECTION
SCALE 1:40

A APPROACH SLAB DETAILS (ABUT. A2)
SCALE AS SHOWN

BAR BENDING DIAGRAM

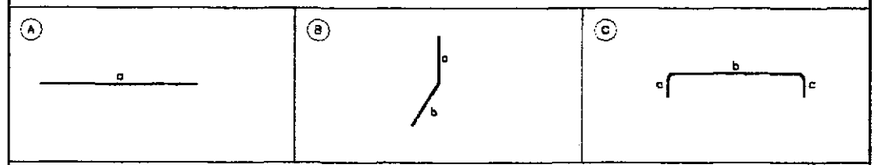

SCHEDULE OF REINFORCEMENT

LOCATION	BAR MARK	SIZE (mm)	BEND TYPE	DIMENSION(mm) OUT TO OUT a	b	c	d	e	f	LENGTH (mm)	NO. REQ'D.	UNIT WEIGHT (kg/m)	WEIGHT (Kgs.) GRADE 40	GRADE 60
APPROACH SLAB (ABUT. A2)	A1	25	A	4900						4900	55	3.853		1038
	A2	25	A	4450 max 1950 min						3200	8	3.853		99
	A3	20	A	12600						12600	5	2.466		155
	A4	20	A	12500 max 11140 min						8820	16	2.466		466
	A5	20	A	9600						9600	1	2.466		24
	A6	16	A	12600						12600	4	1.578	79	
	A7	16	A	12500 max 11180 min						11820	15	1.578	279	
	A8	20	A	11140						11140	1	2.466		27
	A9	16	A	4900						4900	28	1.578	217	
	A10	16	A	4450 max 2850 min						3650	4	1.578	23	
	A11	25	B	1000	3950					4950	4	3.853		76
	A12	16	C	300	200	300				800	28	1.578	35	
	A13	16	C	300	200	300				800	33	1.578	42	
	A14	16	C	200	500	200				900	66	1.578	94	
	A15	16	A	12600						12600	6	1.578	119	
	A16	20	A	500						500	61	2.466		75
											TOTAL WEIGHT	=	888	1980

THE REINFORCEMENT SHOWN ON THIS TABLE IS FOR REFERENCE ONLY. THE CONTRACTOR SHOULD CHECK AND VERIFY ALL DIMENSIONS, SIZES AND QUANTITIES OF REINFORCEMENT.

JICA
JAPAN INTERNATIONAL COOPERATION AGENCY
KEI KATAHIRA & ENGINEERS INTERNATIONAL
YEO YACHIYO ENGINEERING CO., LTD.

	DATE	SIGNATURE
DESIGNED	9/21/02	M. NAVA
CHECKED	9/23/02	J. C. SANTOS
SUBMITTED	10/14/02	M. KUSAKA TEAM LEADER

REPUBLIC OF THE PHILIPPINES
DEPARTMENT OF PUBLIC WORKS AND HIGHWAYS

PUHL – PMO	BUREAU OF DESIGN		OFFICE OF THE SECRETARY	
Submitted By:	Reviewed By:	Recommended By:	Recommended By: (See cover sheet for Signature)	Approved By: (See cover sheet for Signature/Approval)
DANILO C. TRAJANO Project Director	ADRIANO M. DOROY Chief, Bridges Division	GILBERTO S. REYES Director IV (OIC)	MANUEL M. BONDAN Undersecretary	SIMEON A. DATUMANONG Secretary

PROJECT AND LOCATION :
THE DETAILED DESIGN STUDY ON UPGRADING INTER-URBAN HIGHWAY SYSTEM ALONG THE PAN-PHILIPPINE HIGHWAY (Plaridel, Cabanatuan and San Jose Bypasses)
PLARIDEL BYPASS - CONTRACT PACKAGE III

SCALE : AS SHOWN
FULL SIZE A1

SHEET CONTENTS :
BRIDGE NO. 8 ANGAT RIVER BRIDGE
APPROACH SLAB REINF. DETAILS (ABUTMENT A2)
(INITIAL STAGE)

SHEET NO. : B8A-81

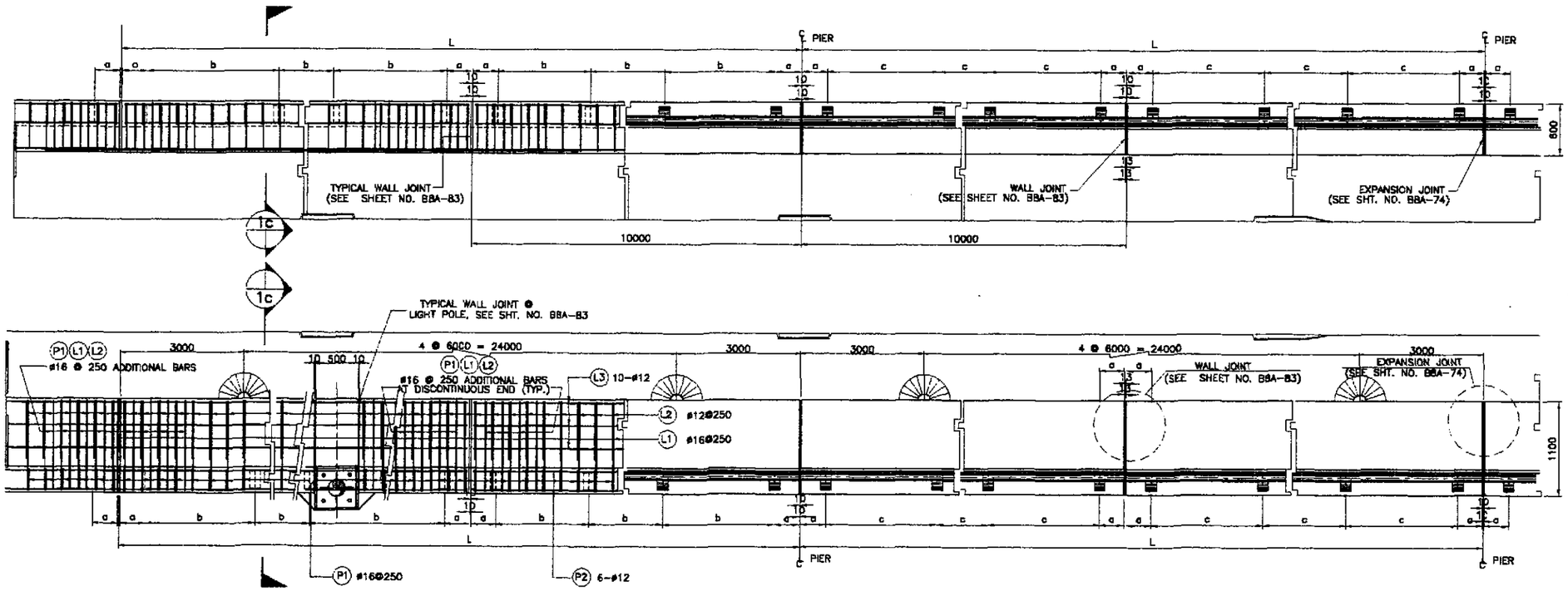

1a PLAN
NOT TO SCALE

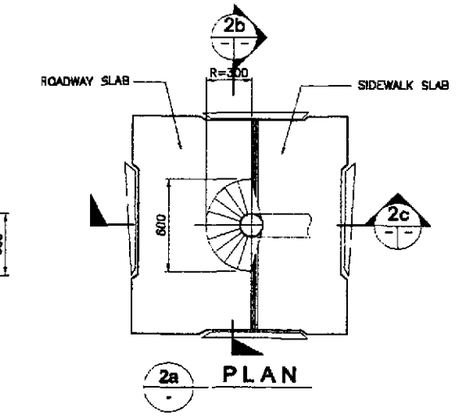

2a PLAN

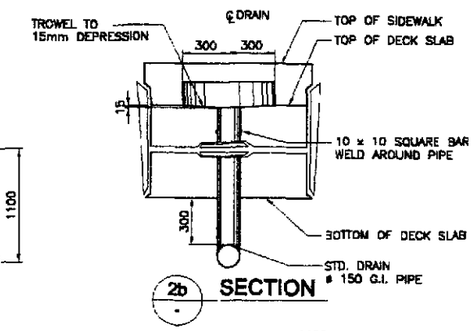

2b SECTION

SCHEDULE OF RAILING					
SPAN LENGTH (m)	NO. OF DEFLECTION JT. INSIDE SPAN	NO. OF RAIL POST PER SIDE/SPAN	a (mm)	b (mm)	c (mm)
30.00	2	18	250	1895	1895

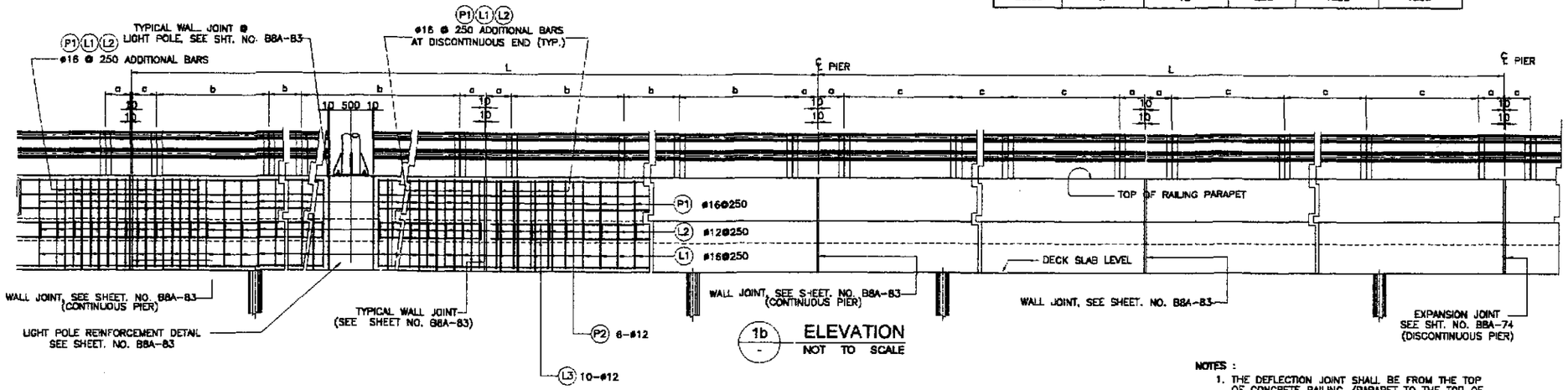

1b ELEVATION
NOT TO SCALE

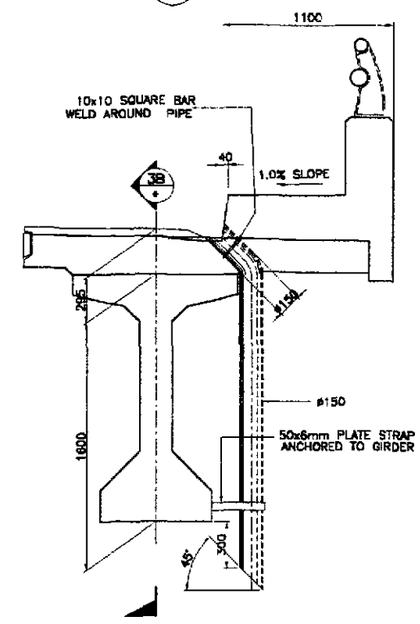

2c SECTION

NOTES :
1. THE DEFLECTION JOINT SHALL BE FROM THE TOP OF CONCRETE RAILING /PARAPET TO THE TOP OF DECK SLAB.
2. NUMBER OF DEFLECTION JOINT INSIDE SPAN DOES NOT INCLUDE LIGHT POLE.

1 TYPICAL SIDEWALK, RAILING AND DRAIN DETAILS
SCALE AS SHOWN

2 TYPICAL DRAIN DETAILS
SCALE 1:20

JICA
JAPAN INTERNATIONAL COOPERATION AGENCY
KATAHIRA & ENGINEERS INTERNATIONAL
YACHIYO ENGINEERING CO., LTD.

	DATE	SIGNATURE
DESIGNED	9/21/02	M. S. NAVAL
CHECKED	9/23/02	J. C. SANTOS
SUBMITTED	10/14/02	M. DONDON TEAM LEADER

REPUBLIC OF THE PHILIPPINES
DEPARTMENT OF PUBLIC WORKS AND HIGHWAYS

PUHL – PMO	BUREAU OF DESIGN		OFFICE OF THE SECRETARY	
Submitted By:	Reviewed By:	Recommended By:	Recommended By: (See cover sheet for Signature)	Approved By: (See cover sheet for Signature/Approval)
DANILO C. TRAJANO	ADRIANO M. DORGY	GILBERTO S. REYES	MANUEL M. BONDAN	SIMEON A. DATUMANONG
Project Director	Chief, Bridges Division	Director IV (OIC)	Undersecretary	Secretary

PROJECT AND LOCATION :
THE DETAILED DESIGN STUDY ON UPGRADING INTER-URBAN HIGHWAY SYSTEM ALONG THE PAN-PHILIPPINE HIGHWAY (Plaridel, Cabanatuan and San Jose Bypasses)
PLARIDEL BYPASS - CONTRACT PACKAGE III

SCALE : AS SHOWN
FULL SIZE A1

SHEET CONTENTS :
BRIDGE NO. 8 ANGAT RIVER BRIDGE
TYPICAL SIDEWALK, RAILING AND DRAIN DETAIL (INITIAL STAGE)

SHEET NO. : B8A-82

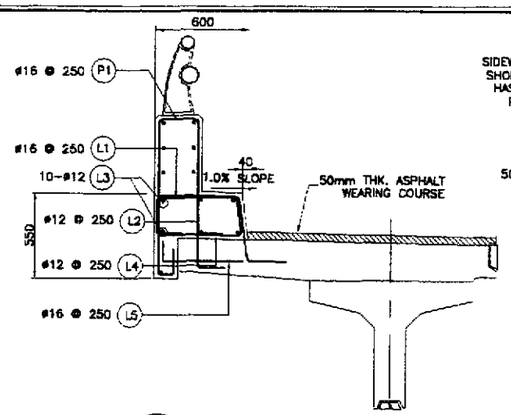

A1 SIDEWALK (TRAFFIC)
SCALE 1:20

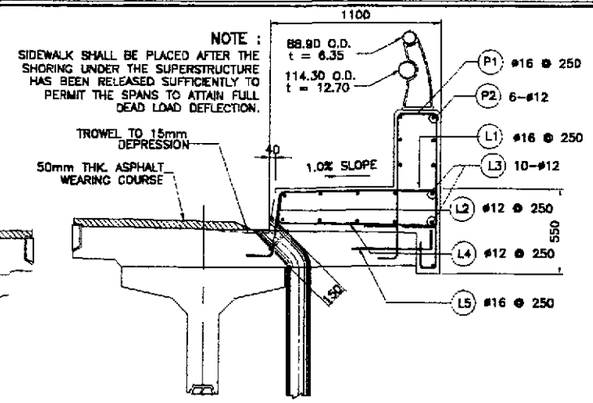

A2 SIDEWALK (PEDESTRIAN)
SCALE 1:20

A SIDEWALK REINFORCEMENT DETAILS
SCALE AS SHOWN

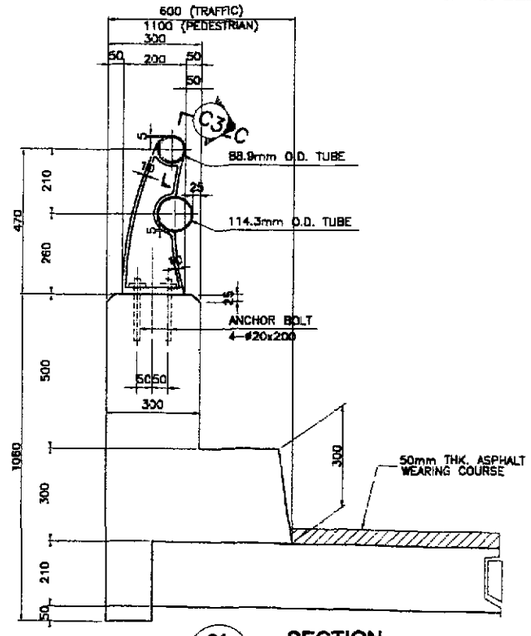

C1 SECTION
SCALE 1:10

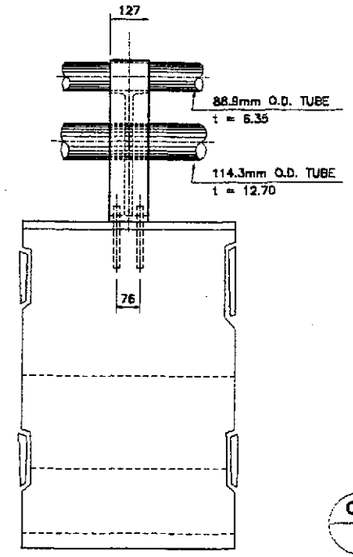

C2 ELEVATION
SCALE 1:10

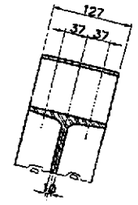

C3 SECTION
SCALE 1:5

C DETAILED DIMENSION OF RAILING
SCALE AS SHOWN

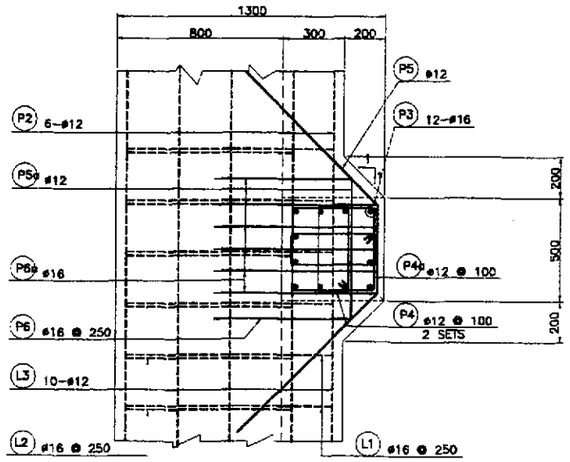

B2 SECTION
SCALE 1:15

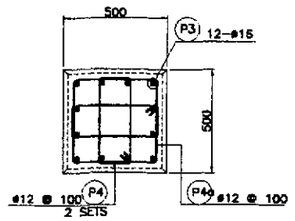

B3 SECTION
SCALE 1:15

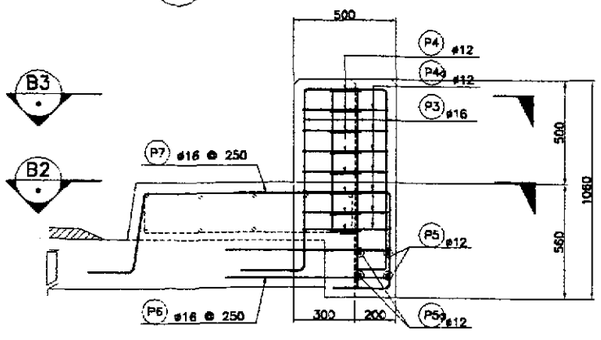

B1 ELEVATION
SCALE 1:15

B LIGHT POLE BASE REINF. DETAIL
SCALE AS SHOWN

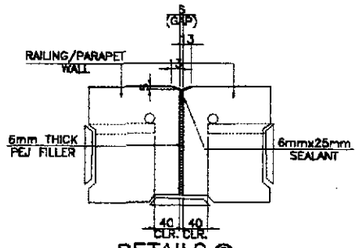

DETAILS @ WALL JOINT

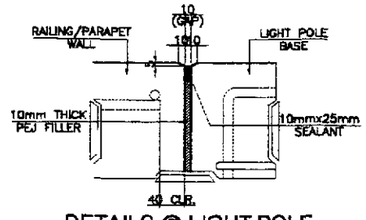

DETAILS @ LIGHT POLE BASE / WALL JOINT

D DETAILS OF DEFLECTION JOINTS
SCALE 1:5

NOTES :

1. FOR LOCATION OF JOINTS SEE DWG. NO. B8A-82.
2. PROVIDE DEFLECTION JOINTS AT EVERY CONTINUOUS PIER EXCEPT @ LIGHT POST POSITION. ALSO PROVIDE TWO (2) ADDITIONAL DEFLECTION JOINTS IN BETWEEN PIERS.
3. PROVIDE ADDITIONAL BARS ON BOTH SIDES FOR EVERY DEFLECTION AND EXPANSION JOINTS.

1 SIDEWALK & LIGHT POLE BASE REINF. DETAILS, RAILING DIMENSIONS
SCALE AS SHOWN

BAR BENDING DIAGRAM

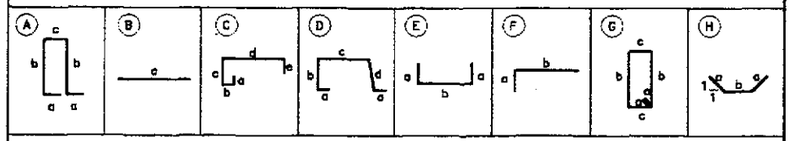

SCHEDULE OF REINFORCEMENT

LOCATION	BAR MARK	SIZE (mm)	BEND TYPE	DIMENSION(mm) OUT TO OUT a	b	c	d	e	LENGTH (mm)	NO. REQ'D.	UNIT WEIGHT (kg/m)	WEIGHT(kgs.) Grade 40	Grade 60
PARAPET	P1	16	A	300	720	220			2260	288	1.578	1027	
	P2	12	B	9874					9874	36	0.888	316	
									TOTAL WEIGHT PER SPAN = 1343 Kgs.				
									TOTAL WEIGHT FOR 24 SPANS = 32232 Kgs.				
SIDEWALK PEDESTRIAN	L1	16	C	100	70	450	980	260	1850	144	1.578	423	
	L2	12	D	200	375	700	375		1850	144	0.888	237	
	L3	12	B	9874					9874	33	0.888	289	
	L4	12	E	200	880				1380	144	0.888	176	
	L5	12	F	200	400				600	144	0.888	77	
									TOTAL WEIGHT PER SPAN = 1202 Kgs.				
									TOTAL WEIGHT FOR 24 SPANS = 28848 Kgs.				
SIDEWALK TRAFFIC	L1	16	C	100	70	4750	480	260	5580	144	1.578	1286	
	L2	12	D	200	375	200	375		1350	144	0.888	173	
	L3	12	B	9874					9874	21	0.888	184	
	L4	12	E	220	480				880	144	0.888	113	
	L5	12	F	200	400				600	144	0.888	77	
									TOTAL WEIGHT PER SPAN = 1833 Kgs.				
									TOTAL WEIGHT FOR 24 SPANS = 43992 Kgs.				
LIGHT POST	P3	16	F	300	910				1210	12	1.578	23	
	P4	12	G	150	150	420			1440	18	0.888	20	
	P4a	12	G	150	420	420			1680	8	0.888	14	
	P5	12	H	1000	500				2500	2	0.888	4	
	P5a	12	B	700					700	2	0.888	1	
	P6	16	E	650	130				1430	5	1.578	11	
	P6a	16	E	750	130				1630	5	1.578	13	
	P7	12	C	100	250	4750	1160	260	6520	3	0.888	17	
									TOTAL WEIGHT PER POST = 103 Kgs.				
									TOTAL WEIGHT FOR 24 POST = 1236 Kgs.				

THE REINFORCEMENT SHOWN ON THIS TABLE IS FOR REFERENCE ONLY. THE CONTRACTOR SHOULD CHECK AND VERIFY ALL DIMENSIONS, SIZES AND QUANTITIES OF REINFORCEMENT.

JICA
JAPAN INTERNATIONAL COOPERATION AGENCY
KEI KATAHIRA & ENGINEERS INTERNATIONAL
YEO YACHIYO ENGINEERING CO., LTD.

	DATE	SIGNATURE
DESIGNED	9/23/02	A. S. NAMIA
CHECKED	9/23/02	J. SANTOS
SUBMITTED	10/14/02	M. KIKUCHI TEAM LEADER

REPUBLIC OF THE PHILIPPINES
DEPARTMENT OF PUBLIC WORKS AND HIGHWAYS

FUHL – PMO	BUREAU OF DESIGN		OFFICE OF THE SECRETARY	
Submitted By:	Reviewed By:	Recommended By:	Recommended By: (See cover sheet for Signature)	Approved By: (See cover sheet for Signature/Approval)
DANILO C. TRAJANO, Project Director	ADRIANO M. DOROY, Chief, Bridges Division	GILBERTO S. REYES, Director IV (OIC)	MANUEL M. BONDAK, Undersecretary	SIMEON A. DATUMANONG, Secretary

PROJECT AND LOCATION :
THE DETAILED DESIGN STUDY ON UPGRADING INTER-URBAN HIGHWAY SYSTEM ALONG THE PAN-PHILIPPINE HIGHWAY (Plaridel, Cabanatuan and San Jose Bypasses)
PLARIDEL BYPASS - CONTRACT PACKAGE III

SCALE : AS SHOWN
FULL SIZE A1

SHEET CONTENTS :
BRIDGE NO. 8 ANGAT RIVER BRIDGE
SIDEWALK & LIGHT POLE BASE REINF. DETAILS, RAILING DIMENSIONS
(INITIAL STAGE)

SHEET NO. : B8A-83

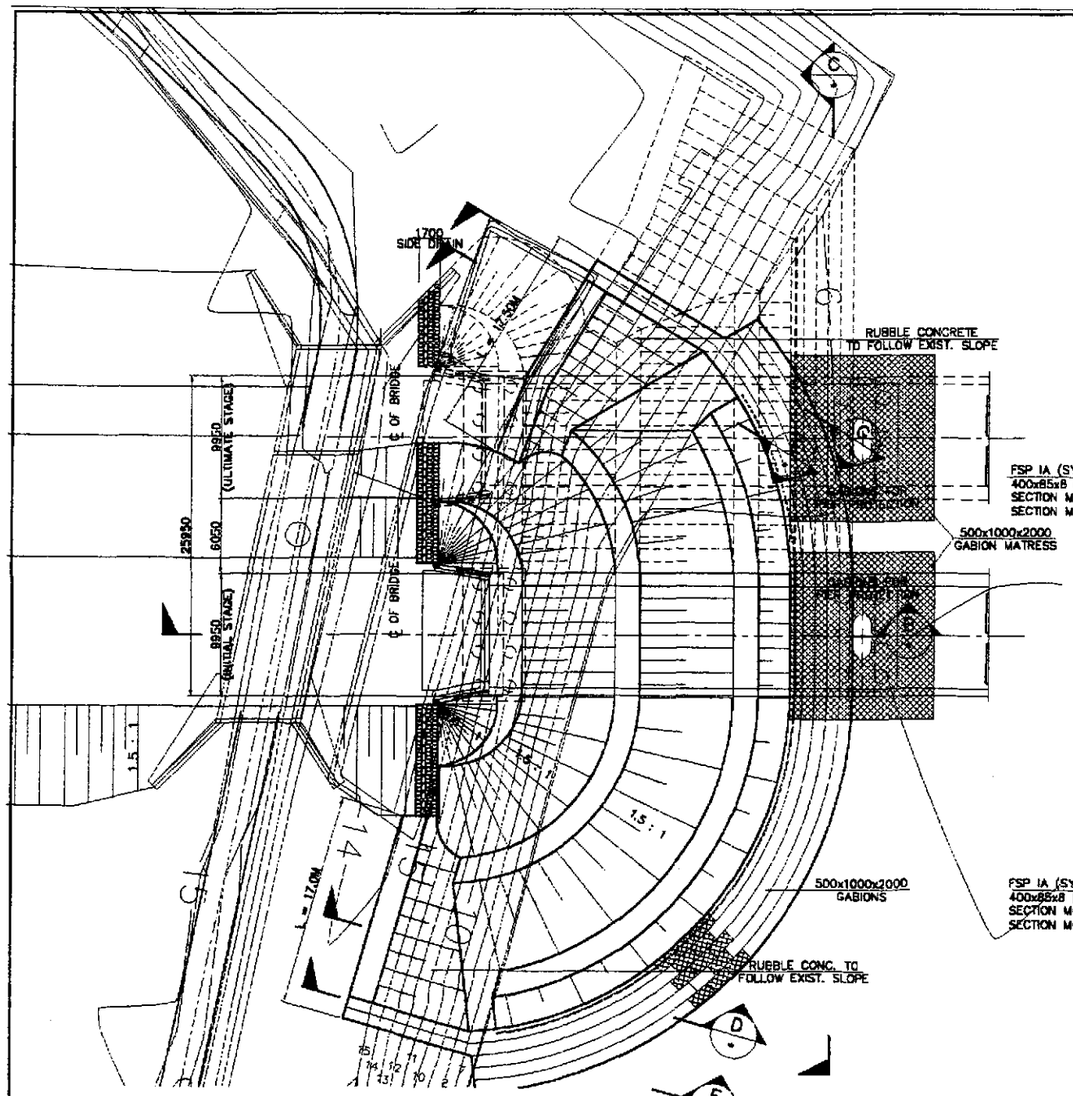

A — PLAN
SCALE 1:250

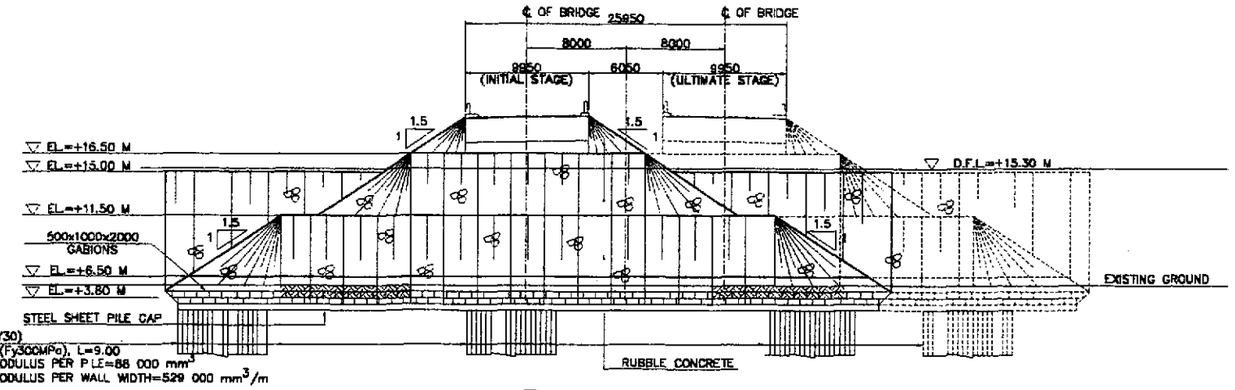

C — ELEVATION
SCALE 1:250

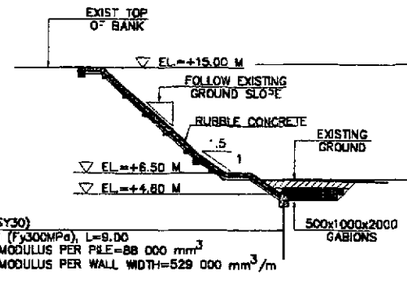

D — SECTION
SCALE 1:250

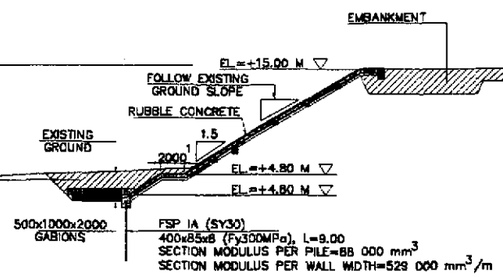

E — SECTION
SCALE 1:250

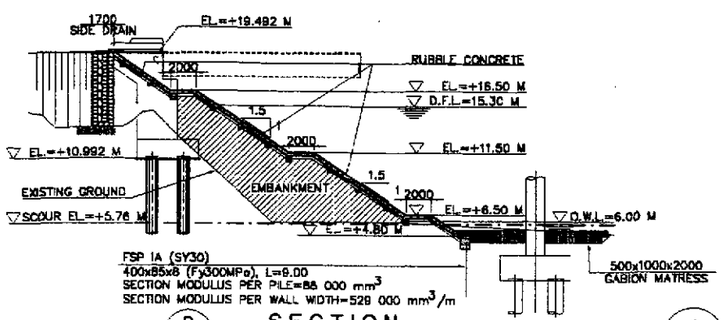

B — SECTION
SCALE 1:250

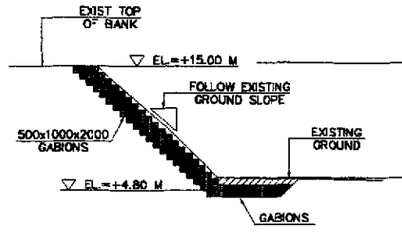

F — SECTION
SCALE 1:250

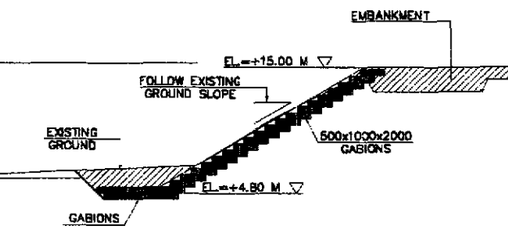

G — SECTION
SCALE 1:250

NOTES :

1. SLOPE PROTECTION SHOWN BY SOLID LINES ARE FOR THE INITIAL STAGE.
2. SLOPE PROTECTION SHOWN BY HIDDEN LINES ARE FOR THE ULTIMATE STAGE.

1 — ABUTMENT SLOPE PROTECTION LAYOUT (ABUTMENT A1)
SCALE AS SHOWN

JICA
JAPAN INTERNATIONAL COOPERATION AGENCY
KEI KATAHIRA & ENGINEERS INTERNATIONAL
YEC YACHIYO ENGINEERING CO., LTD.

	DATE	SIGNATURE
DESIGNED	9/21/02	M. S. TOVAL
CHECKED	9/25/02	J. SANTOS
SUBMITTED	10/14/02	TEAM LEADER

REPUBLIC OF THE PHILIPPINES
DEPARTMENT OF PUBLIC WORKS AND HIGHWAYS

PJHL - PMO	BUREAU OF DESIGN		OFFICE OF THE SECRETARY	
Submitted By:	Reviewed By:	Recommended By:	Recommended By: (See cover sheet for signature)	Approved By: (See cover sheet for signature/approval)
DANILO C. TRAJANO	PERFECTO L. ZAPLAN JR.	GILBERTO S. REYES	MANUEL M. BONGAN	SIMEON A. DATUIMANONG
Project Director	Chief, Hydraulics Division (OIC)	Director IV (OIC)	Undersecretary	Secretary

PROJECT AND LOCATION :
THE DETAILED DESIGN STUDY ON UPGRADING INTER-URBAN HIGHWAY SYSTEM ALONG THE PAN-PHILIPPINE HIGHWAY (Plaridel, Cabanatuan and San Jose Bypasses)
PLARIDEL BYPASS - CONTRACT PACKAGE III

SCALE : AS SHOWN
FULL SIZE A1

SHEET CONTENTS :
BRIDGE NO. 8 ANGAT RIVER BRIDGE
ABUTMENT SLOPE PROTECTION LAYOUT (ABUTMENT A1) (INITIAL STAGE)

SHEET NO. : B8A-84

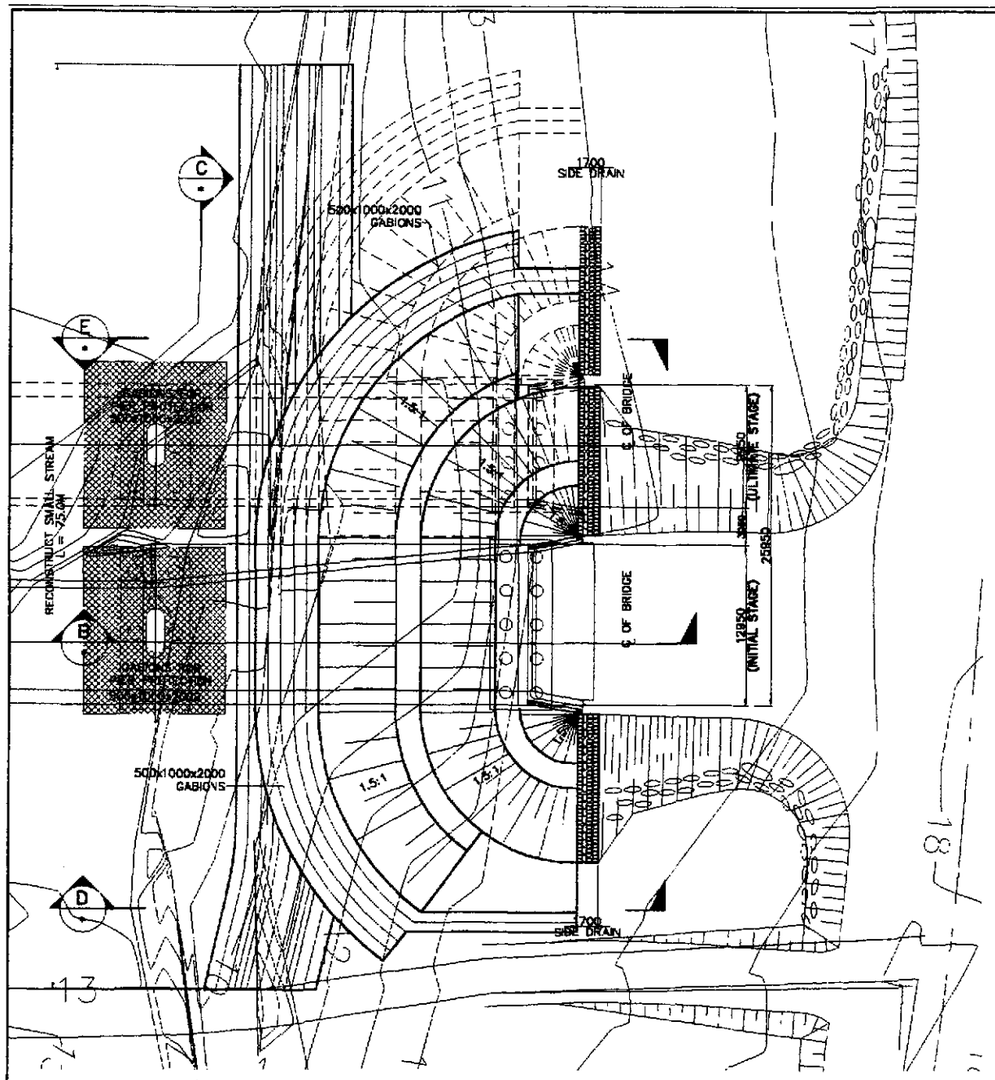

A PLAN
SCALE 1:250

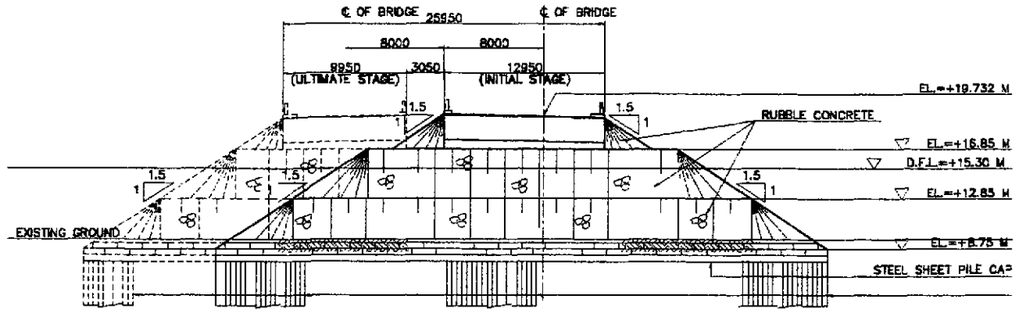

C ELEVATION
SCALE 1:250

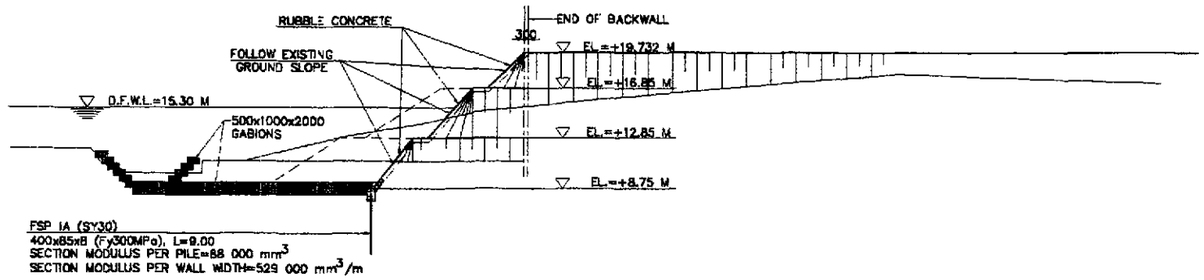

D SECTION
SCALE 1:250

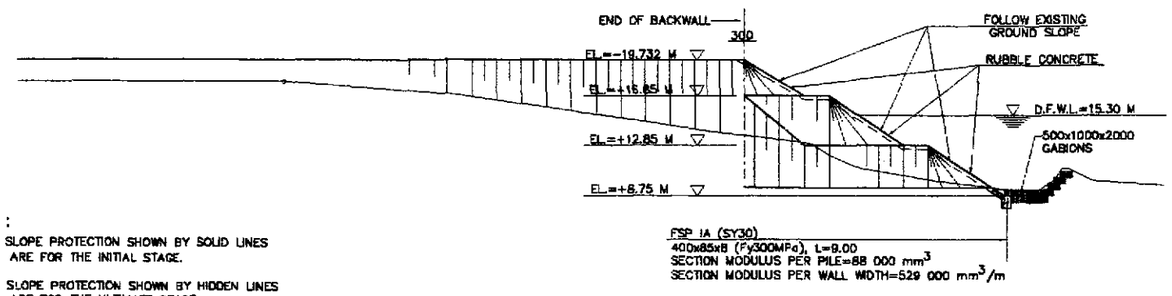

E SECTION
SCALE 1:250

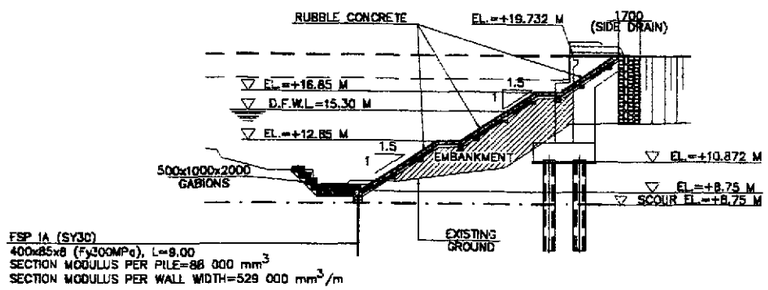

B SECTION
SCALE 1:250

NOTES :

1. SLOPE PROTECTION SHOWN BY SOLID LINES ARE FOR THE INITIAL STAGE.
2. SLOPE PROTECTION SHOWN BY HIDDEN LINES ARE FOR THE ULTIMATE STAGE.

1 ABUTMENT SLOPE PROTECTION LAYOUT (ABUTMENT A2)
SCALE AS SHOWN

JICA JAPAN INTERNATIONAL COOPERATION AGENCY KEI KATAHIRA & ENGINEERS INTERNATIONAL YEC YACHIYO ENGINEERING CO., LTD.	DATE / SIGNATURE	REPUBLIC OF THE PHILIPPINES DEPARTMENT OF PUBLIC WORKS AND HIGHWAYS				PROJECT AND LOCATION:	SCALE:
	DESIGNED 9/21/02 M. S. NAVAL	P/HL - PMO	BUREAU OF DESIGN		OFFICE OF THE SECRETARY	THE DETAILED DESIGN STUDY ON UPGRADING INTER-URBAN HIGHWAY SYSTEM ALONG THE PAN-PHILIPPINE HIGHWAY (Plaridel, Cabanatuan and San Jose Bypasses)	AS SHOWN
	CHECKED 9/23/02 I. SANTOS	Submitted By:	Reviewed By:	Recommended By:	Recommended By: (See cover sheet for signature) / Approved By: (See cover sheet for signature)		
	SUBMITTED 10/18/02 TEAM LEADER	DANILO C. TRAJANO Project Director	PERFECTO L. ZAPLAN JR. Chief, Hydraulics Division (OIC)	GILBERTO S. REYES Director IV (OIC)	MANUEL M. BONOAN Undersecretary	SIMEON A. DATUMANONG Secretary	PLARIDELN BYPASS - CONTRACT PACKAGE III	FULL SIZE A1

SHEET CONTENTS:	SHEET NO.:
BRIDGE NO. 8 ANGAT RIVER BRIDGE ABUTMENT SLOPE PROTECTION LAYOUT (ABUTMENT A2) (INITIAL STAGE)	B8A-85

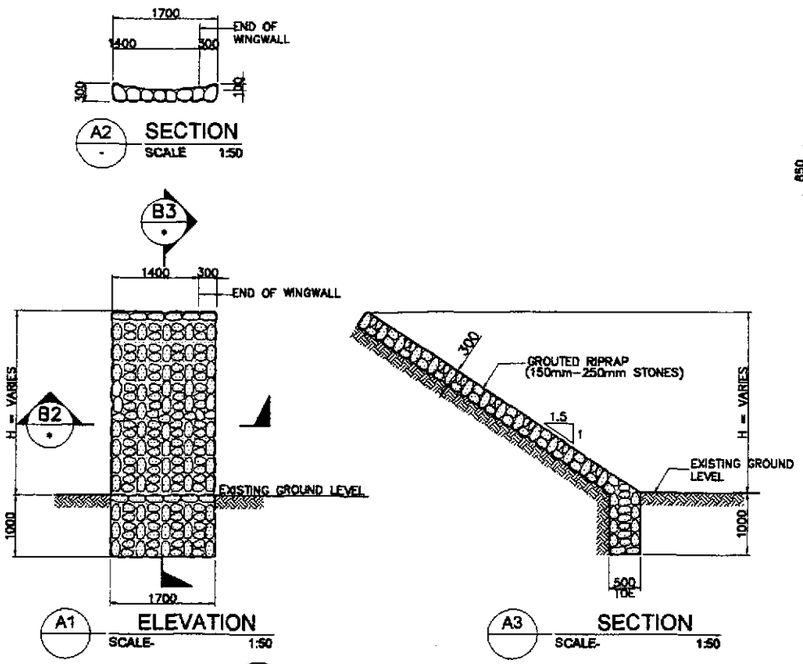

A SIDE DRAIN DETAILS
SCALE AS SHOWN

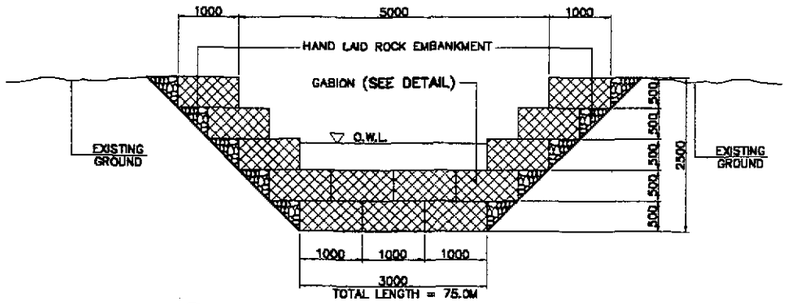

E TYPICAL SMALL STREAM SECTION
SCALE 1:50

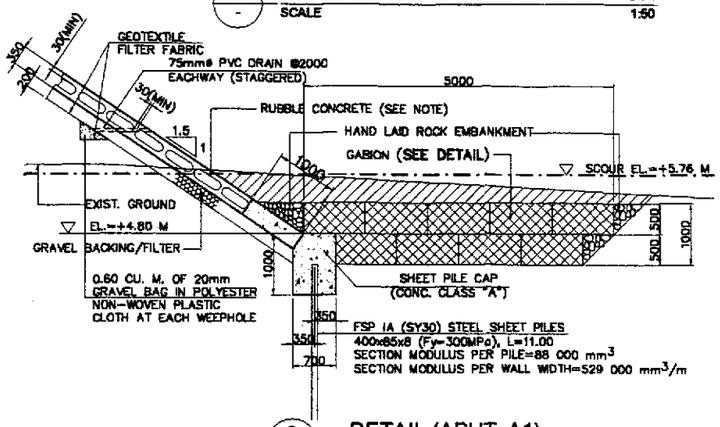

C DETAIL (ABUT. A1)
SCALE 1:50

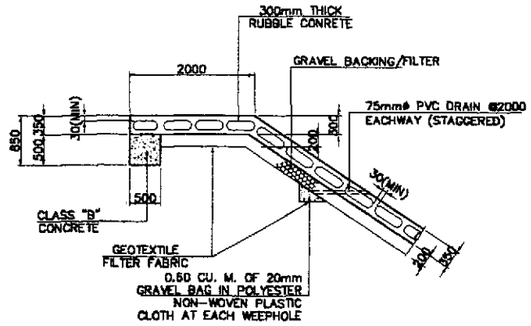

D BERM DETAIL
SCALE 1:50

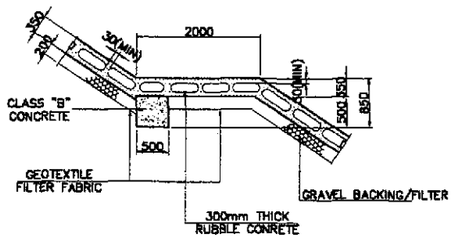

G BERM DETAIL
SCALE 1:50

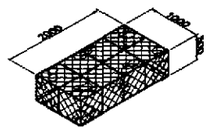

B GABION DETAIL
NOT TO SCALE

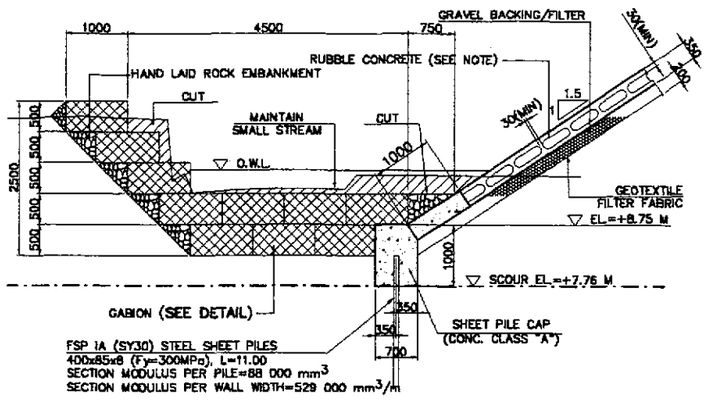

F DETAIL (ABUT. A2)
SCALE 1:50

FSP IA :
SECTION MODULUS PER PILE = 88 000 mm3
SECTION MODULUS PER WALL WIDTH = 529 000 mm3/m

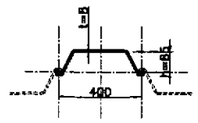

SECTION OF SHEET PILE

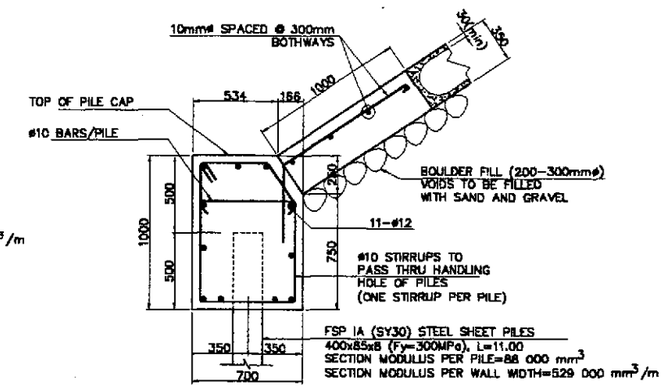

H CAPPING & SHEET PILE CONNECTION
SCALE 1:20

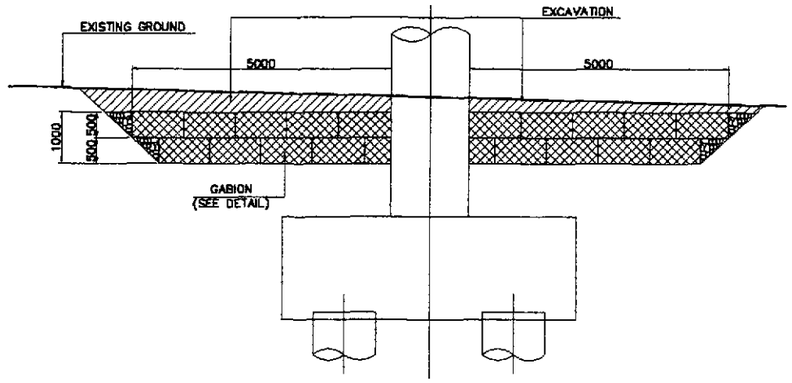

I GABION FOR PIER PROTECTION DETAIL
SCALE 1:60

GENERAL NOTES:

1. THE SLOPE PROTECTION SHOWN IN THE DRAWINGS SHALL CONFORM WITH THE DPWH STANDARD SPECIFICATIONS FOR SLOPE PROTECTION.
2. GROUTED RIPRAP FOR SIDE DRAIN (150-300mm DIA.) SHALL BE USED FOR THE FACING AND SHALL BE CAREFULLY HANDLAID WITH THE LONGEST DIMENSIONS PERPENDICULAR TO THE SLOPE AND FIRMLY BEDDED TO THE SLOPE AND ADJACENT TO THE ADJOINING BOULDERS SHALL BE COMPLETELY FILLED WITH MORTAR. THE OUTSIDE SURFACE OF THE BOULDERS SHALL BE EXPOSED AND THE SURFACEOF THE MORTAR SHALL BE SWEPT WITH A STIFF BROOM.
3. RUBBLE CONCRETE FOR SLOPE PROTECTION SHALL CONSIST OF CLASS "B" (1:2.5:5) MIX CONCRETE WITH 200-300mm DIA. BOULDERS EMBEDDED THEREIN. THE BOULDERS SHALL BE CAREFULLY HANDLAID AND THOROUGHLY INCORPORATED INTO THE MASS. AT LEAST 30mm APART AND SHALL BE AT LEAST 30mm BELOW THE OUTSIDE SURFACE OF SURFACE OF THE CONCRETE. THE RUBBLE CONCRETE SHALL BE COMPOSED OF 40% CLASS "B" CONCRETE & 60% BOULDERS.
4. WIRE MESH GABIONS:
   A. WIRE – THE WIRE MESH SHALL MADE OF GALVANIZED STEEL HAVING A MINIMUM SIZE OF 3.40mm DIA. (U.S. WIRE GAUGE NO.11). THE TENSILE STRENGTH OF THE WIRE SHALL BE IN RANGE OF 413 TO 586.10 MPa. (60000-85000 PSI). THE MINIMUM ZINC COATING OF THE WIRE SHALL BE 22.70 g/0.0929 sq.m. OF UNCOATED WIRE SURFACES AS DETERMINED BY TEST CONDUCTED IN ACCORDANCE WITH AASHTO T65.
8. ROCK FILL – ROCK USED IN THE GABIONS SHALL CONSISTS OF HARD DURABLE ROCK PIECES THAT WILL NOT DETERIORATE WHEN SUBMERGED IN WATER OR EXPOSED TO SEVER WEATHER CONDITIONS. ROCK PIECES SHALL BE GENERALLY UNFORMLY GRADED IN SIZES RANGING FROM 100 TO 200mm FILLED GABIONS SHALL HAVE A MINIMUM DENSITY OF 1400 kg/cu.m. VOIDS SHALL BE EVENLY DISTRIBUTED. THE ROCKS SHALL MEET THE REQUIREMENTS OF AASHTO M63 EXCEPT THAT THE SODIUM SULFATE SOUNDNESS LOSS SHALL NOT EXCEED 9% AFTER 5 CYCLES.
5. GRAVEL FILTER SHALL BE COARSE AGGREGATE MATERIALS WHICH SATISFY THE REQUIREMENTS FOR ITEM 405, STRUCTURAL CONCRETE GRADING B. OF TABLE 405.1 AS REVISED.
6. GEOTEXTILE:
   THE FOLLOWING SPECIFICATIONS ARE REQUIRED.
   (a) POLYSTER OR POLYPROPELENE – 100%
   (b) MECHANICALLY HEAT BOND BONDED
   (c) NON-WOVEN & COMPRISE OF CONTINOUS FILAMENT
   (d) EFFECTIVE OPENING SIZE – 110 MICRONS (MAX)
   (e) THICKNESS UNDER PRESSURE – 200 KN/sq.m., 0.60mm (MIN)
   (f) WEIGHT 200 g/sq.m. (MIN)
   (g) CBR PUNCTURE STRENGTH – 2100 N
   (h) MULTI-DIRECTIONAL TENSILE STRENGTH – 13 KN/m.
7. HAND-LAID ROCK SHALL BE MORE THAN 0.015 cu.m. IN VOLUME AND SHALL CONSISTS OF HARD AND DURABLE STONES. ALL SHALL BE LAID FLAT AND SECURELY PLACED WITH LARGER STONES GENERALLY LOCATED IN THE LOWER PART OF THE STRUCTURE.

FOR MATTRESES:

1. BODY WIRE DIAMETER ———— 2.70 mm
2. SELVEDGE WIRE DIAMETER ———— 3.40 mm
3. TENSILE STRENGTH ———— 413.7 MPa–586.10 MPa
4. WT. OF ZINC COATING ———— 244 g/sq.m OF CAOTED WIRE SURFACE
5. ELONGATION; 200mm GAGE LEGNTH ——— 12% (min)
6. TYING & CONNECTING WIRE DIAMETER ——— 2.20 mm
7. ROCK FILL ———— 100 mm DIAMETER
8. DENSITY OF FILLED GABIONS ———— 1400 Kg/cu.m
9. WIRE SHOULD BE TRIPLE TWISTED

1 DETAILS OF ABUT. SLOPE PROTECTION FOR ABUTMENT A1 & A2
SCALE AS SHOWN

JICA JAPAN INTERNATIONAL COOPERATION AGENCY			
KEI KATAHIRA & ENGINEERS INTERNATIONAL / YEO YACHIYO ENGINEERING CO., LTD.			
	DATE	SIGNATURE	
DESIGNED	9/21/02	M. SANAVAD	
CHECKED	9/23/02	J. SANTOS	
SUBMITTED	10/14/02	TEAM LEADER	

REPUBLIC OF THE PHILIPPINES
DEPARTMENT OF PUBLIC WORKS AND HIGHWAYS

PJHL – PMO	BUREAU OF DESIGN		OFFICE OF THE SECRETARY	
Submitted By:	Reviewed By:	Recommended By:	Recommended By: (See cover sheet for Signature)	Approved By: (See cover sheet for Signature/Approval)
DANILO C. TRAJANO	PERFECTO L. ZAPLAN JR.	GILBERTO S. REYES	MANUEL M. BONDAN	SIMEON A. DATUMANONG
Project Director	Chief, Hydraulics Division (OIC)	Director IV (OIC)	Undersecretary	Secretary

PROJECT AND LOCATION :	SCALE :	SHEET CONTENTS :	SHEET NO. :
THE DETAILED DESIGN STUDY ON UPGRADING INTER-URBAN HIGHWAY SYSTEM ALONG THE PAN-PHILIPPINE HIGHWAY (Plaridel, Cabanatuan and San Jose Bypasses)	AS SHOWN	BRIDGE NO. 8 ANGAT RIVER BRIDGE DETAILS OF ABUT. SLOPE PROTECTION FOR ABUTMENT A1 & A2 (INITIAL STAGE)	B8A-86
PLARIDEL BYPASS - CONTRACT PACKAGE II	FULL SIZE A1		

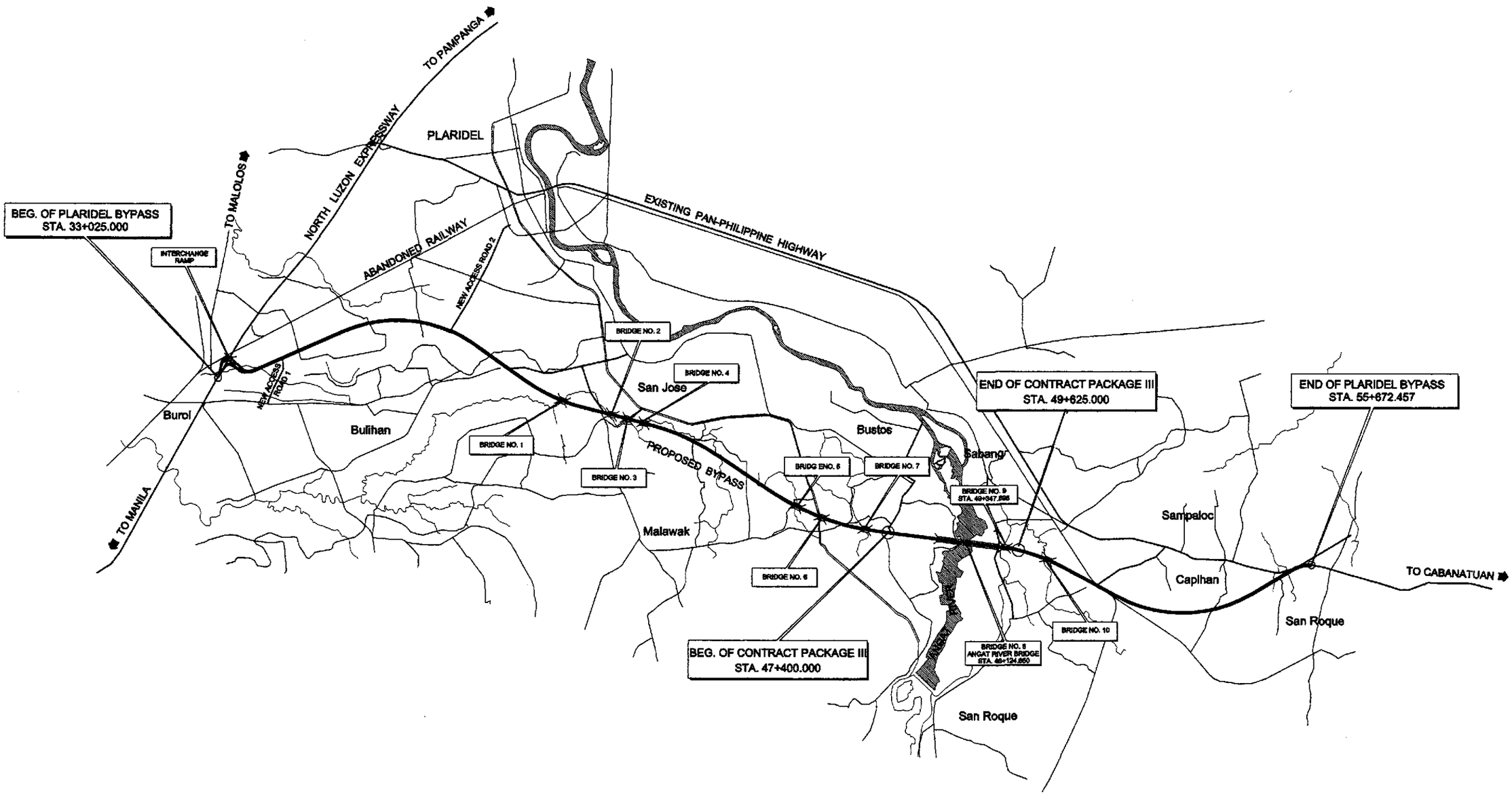

A PLARIDEL BYPASS BRIDGE LOCATION MAP

NOT TO SCALE

JICA
JAPAN INTERNATIONAL COOPERATION AGENCY

KATAHIRA & ENGINEERS INTERNATIONAL
YACHIYO ENGINEERING CO., LTD.

	DATE	SIGNATURE
DESIGNED	9/23/02	E.M. SALLAN
CHECKED	9/23/02	TEAM LEADER
SUBMITTED	10/24/02	TEAM LEADER

REPUBLIC OF THE PHILIPPINES
DEPARTMENT OF PUBLIC WORKS AND HIGHWAYS

PUHL – PMO	BUREAU OF DESIGN		OFFICE OF THE SECRETARY	
Submitted By:	Reviewed By:	Recommended By:	Recommended By: (See cover sheet for Signature)	Approved By: (See cover sheet for Signature/Approval)
DANILO C. TRAJANO	ADRIANO M. DOROY	GILBERTO S. REYES	MANUEL M. BONDAN	SIMEON A. DATUMAHONG
Project Director	Chief, Bridges Division	Director IV (OIC)	Undersecretary	Secretary

PROJECT AND LOCATION :	SCALE :	SHEET CONTENTS :	SHEET NO. :
THE DETAILED DESIGN STUDY ON UPGRADING INTER-URBAN HIGHWAY SYSTEM ALONG THE PAN-PHILIPPINE HIGHWAY (Plaridel, Cabanatuan and San Jose Bypasses)	AS SHOWN	BRIDGE LOCATION MAP	BG-01
PLARIDEL BYPASS - CONTRACT PACKAGE III	FULL SIZE A1	(INITIAL STAGE)	

GENERAL NOTES FOR BRIDGES

(SHEET 1 OF 2)

A. DESIGN CRITERIA

1. DESIGN SPECIFICATION

(a) THE AMERICAN ASSOCIATION OF STATE HIGHWAY AND TRANSPORTATION OFFICIALS (AASHTO) STANDARD SPECIFICATIONS FOR HIGHWAY BRIDGES 16TH EDITION, 1996.

(b) NATIONAL STRUCTURAL CODE OF THE PHILIPPINES, VOLUME II–BRIDGES, 2ND EDITION, 1997.

2. DESIGN METHODOLOGY

LOAD FACTOR DESIGN METHOD (ULTIMATE STRENGTH DESIGN METHOD)

3. LOADING

3.1 DEAD LOADS

	WEIGHT
A. CONCRETE	24.00 kN/m^3
B. STEEL	77.00 kN/m^3
C. EARTH	19.00 kN/m^3
D. WEARING SURFACE	1.10 kN/m^2

3.2 LIVE LOADS

A. AASHTO HS20 (MS18) TRUCK AND EQUIVALENT LANE LOADING.
B. SIDEWALK LOAD 4.07 kN/m^2
C. ALTERNATE MILITARY LOADING.

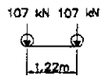

D. PERMIT DESIGN LOAD (SPECIAL PERMIT REQUIRED BEFORE PASSING BRIDGE)

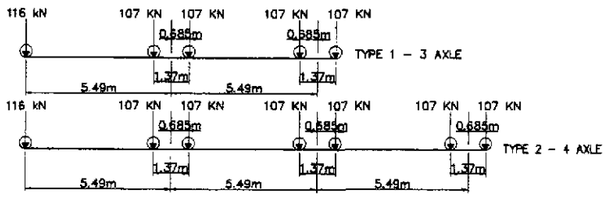

3.3 IMPACT

IN ACCORDANCE WITH DIVISION 1 OF AASHTO STANDARD SPECIFICATIONS,1996.

3.4 SEISMIC LOAD

IN ACCORDANCE WITH DIVISION 1A OF THE 1996 AASHTO STANDARD SPECIFICATIONS FOR HIGHWAY BRIDGES USING ACCELERATIONS COEFFICIENT OF 0.40 AND SEISMIC PERFORMANCE CATEGORY D.

3.5 OTHER LOADS

IN ACCORDANCE WITH AASHTO STANDARD SPECIFICATIONS, 1996.

3.6 LOAD COMBINATION

A. GROUP 1 = 1.3 [1.0 D + 1.67(L+I)n + 1.0 SF]
B. GROUP 1B = 1.3 [1.0 D + 1.0(L+I)p + 1.0 SF]
C. GROUP VII = 1.3 [1.0 D + 1.0 SF + EQ]

B. MATERIALS

1. CONCRETE

UNLESS OTHERWISE INDICATED ON PLANS, THE CONCRETE CLASS AND STRENGTH SHALL BE AS FOLLOWS:

STRUCTURAL MEMBER	CLASS	28 – DAY CYLINDER STRENGTH		MAX. SIZE OF COARSE AGGREGATE mm (in.)	REMARKS
		MPa	PSI		
CAST – IN PLACE GIRDERS, SLABS, DIAPHRAGMS, WINGWALLS, BACKWALLS, COPINGS, COLUMNS	A (MOD)	21	3045	20 (3/4)	
FOOTINGS	A	21	3045	38 (1–1/2)	
PRECAST R.C. PILES	AA	28	4060	20 (3/4)	
THIN REINFORCED SECTIONS RAILINGS AND RAILPOST	C	21	3045	12 (1/2)	
PRESTRESSED CONCRETE MEMBERS	P	35 41	5075 5946	20 (3/4) 20 (3/4)	@ TRANSFER @ SERVICE
LEAN CONCRETE	–	17	2465	50 (2)	

2. REINFORCING STEEL

(a) REINFORCING STEEL SHALL CONFORM TO AASHTO M31 (ASTM A615), GRADES 40 & 60 DEFORMED WITH MINIMUM YIELD STRENGTH.
GRADE 40 (16mmø AND SMALLER)
Fy = 276 MPa (40,000 psi)
GRADE 60 (20mmø AND LARGER)
Fy = 414 MPa (60,000 psi)

(b) REINFORCING STEEL SHALL BE FREE OF MILL SCALES, OIL OR ANY SUBSTANCES WHICH WILL WEAKEN THE BOND WITH CONCRETE.

3. PRESTRESSING STEEL

PRESTRESSING STEEL SHALL BE SEVEN–WIRE UNCOATED STRESS–RELIEVED STRANDS AND SHALL CONFORM TO AASHTO M203 (ASTM A416) WITH MINIMUM ULTIMATE STRENGTH OF Fy = 1860 MPa (270,000psi).

4. STRUCTURAL STEEL, BOLTS AND WELDS

MATERIALS	UNIT WEIGHT
STEEL PLATES AND ROLLED SHAPES	AASHTO M183 (ASTM A36)
BOLTS	AASHTO M164 (ASTM A325)
WELDS	AWS D1.1 – 183, E70XX SERIES

5. ELASTOMERIC BEARING PADS

ELASTOMERIC BEARING PADS SHALL BE 100% VIRGIN CHLOROPRENE (NEOPRENE) PADS WITH DUROMETER HARDNESS 60 AND SHALL BE LAMINATED WITH NON–CORROSIVE MILD STEEL SHEETS. ELASTOMERIC PADS SHALL CONFORM TO THE REQUIREMENTS AS PRESCRIBED IN DPWH D.O. NO. 25 SERIES OF 1997 "REVISED DPWH STANDARD SPECIFICATION FOR ELASTOMERIC BEARING PAD."

SPECIFICATIONS

DURO HARDNESS, SHORE A (ASTM D–2240)------	60
TENSILE STRENGTH ASTM	D 412–175 Kg/cm^2 (min)
ULTIMATE ELONGATION %	350 % (min)
MATERIAL	NEOPRENE

C. CONSTRUCTION

ALL WORKS SHALL COMPLY WITH 1995 DPWH SPECIFICATION FOR ROADS AND BRIDGES OR MODIFIED BY SPECIAL PROVISIONS.

1. DIMENSIONS

1.1 SECTION, DIMENSIONS AND DISTANCES SHALL NOT BE SCALED FOR CONSTRUCTION PURPOSES. THE INDICATED DIMENSION SHALL GOVERN UNLESS OTHERWISE SPECIFIED.

1.2 ALL DIMENSIONS SHOWN ARE IN MILLIMETERS UNLESS OTHERWISE NOTED.

1.3 ALL STATIONING ARE IN KILOMETER PLUS METER AND ELEVATION IN METER.

2. SETTING OUT

THE SETTING OUT AND THE ELEVATIONS OF THE DIFFERENT COMPONENTS OF THE STRUCTURE SHALL BE APPROVED BY THE ENGINEER/CONSULTANT PRIOR TO THE START OF ANY CONSTRUCTION WORK.

3. REINFORCED CONCRETE

a. ALL CAST IN PLACE CONCRETE SHALL BE CLASS "A" EXCEPT RAILINGS WHICH SHALL BE CLASS "C" UNLESS OTHERWISE NOTED ON THE PLANS. ALL EXPOSED EDGES SHALL BE CHAMFERED 25mm EXCEPT RAILINGS AND RE–ENTRANT ANGLES WHICH SHALL BE CHAMFERED AND FILLETED 13mm RESPECTIVELY.

b. CONCRETE MIX AND PLACING

(1) DESIGN OF CONCRETE MIX SHALL MEET THE DESIGN CONCRETE STRENGTH GIVEN UNDER ITEM 1 OF MATERIALS.

(2) CONCRETE SHALL BE DEPOSITED, VIBRATED AND CURED IN ACCORDANCE WITH THE SPECIFICATION.

(3) FOR CONCRETE DEPOSITED AGAINST THE GROUND, LEAN CONCRETE WITH A MINIMUM THICKNESS OF 200mm SHALL LAID FIRST BEFORE INSTALLING THE REINFORCEMENT. THIS LEAN CONCRETE SHALL NOT BE CONSIDERED IN MEASURING THE STRUCTURAL DEPTH OF CONCRETE SECTION.

(4) THE CONTRACTOR SHALL SUBMIT TO THE ENGINEER/CONSULTANT FOR APPROVAL PLACING SEQUENCES FOR ALL CONCRETING WORK.

c. BAR BENDING, SPLICING AND PLACING

(1) THE CONTRACTOR SHALL SUBMIT TO THE ENGINEER/CONSULTANT FOR APPROVAL OF SHOP DRAWINGS INDICATING THE BENDING, CUTTING, SPLICING AND INSTALLATION OF ALL REINFORCING BARS.

(2) BARS SHALL BE BEND COLD. BARS PARTIALLY EMBEDDED IN CONCRETE SHALL NOT BE FIELD BENT UNLESS PERMITTED BY THE ENGINEER/CONSULTANT.

(3) BAR SPLICING NOT INDICATED ON DRAWINGS SHALL BE SUBJECT TO THE APPROVAL OF THE ENGINEER.

(4) WELDED SPLICES, IF APPROVED BY THE ENGINEER, SHALL DEVELOP IN TENSION AT LEST 125% OF THE SPECIFIED YIELD STRENGTH OF THE BARS.

(5) NOT MORE THAN 50% OF THE BARS AT ANY ONE SECTION SHALL BE SPLICED.

(6) UNLESS OTHERWISE SHOWN ON DRAWINGS, THE CLEAR DISTANCE BETWEEN PARALLEL BARS IN A LAYER SHALL NOT BE LESS THAN 1.5 TIMES THE NOMINAL DIAMETER OF THE BAR NOR LESS THAN 1.5 TIMES THE MAXIMUM SIZE OF COARSE AGGREGATE. THE CLEAR DISTANCE BETWEEN LAYERS SHALL NOT LESS THAN 25mm NOR ONE BAR DIAMETER. THE BARS IN THE UPPER LAYER SHALL BE PLACED DIRECTLY ABOVE THOSE IN THE BOTTOM LAYER.

(7) CRANKED SPLICES

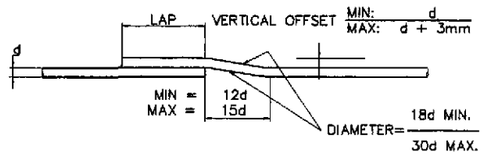

(8) HOOKS AND BENDS

DIMENSIONS OF 90–DEGREE AND 180–DEGREE HOOKS

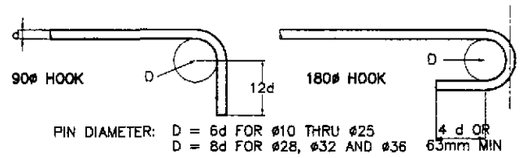

PIN DIAMETER: D = 6d FOR ø10 THRU ø25
D = 8d FOR ø28, ø32 AND ø36

DIMENSIONS FOR STIRRUPS AND TIE HOOKS

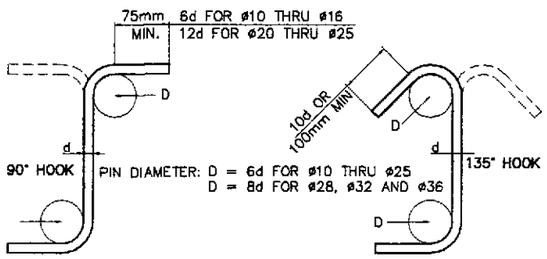

PIN DIAMETER: D = 6d FOR ø10 THRU ø25
D = 8d FOR ø28, ø32 AND ø36

d. CONCRETE COVER TO REINFORCEMENT

UNLESS OTHERWISE NOTED, ALL BAR DIMENSIONS ARE REFERRED TO THE CENTER OF BARS AND THE MINIMUM COVERING MEASURED FROM THE SURFACE OF THE CONCRETE TO THE FACE OF ANY BAR SHALL BE 40mm. FOR SUBSTRUCTURE PERMANENTLY EXPOSED TO EARTH, COVERING SHALL BE 75mm.

e. CONSTRUCTION JOINT

(1) THE POSITION AND FORM OF ANY CONSTRUCTION JOINT SHALL BE AS SHOWN ON DRAWINGS OR AS AGREED WITH THE ENGINEER/CONSULTANT.

(2) THE INTERFACE BETWEEN THE FIRST AND SECOND POUR CONCRETES SHALL BE ROUGHENED WITH AN AMPLITUDE OF 6MM MINIMUM.

f. FALSEWORK

ALL FALSEWORK SHALL BE DESIGNED BY THE CONTRACTOR SUBJECT TO THE APPROVAL BY THE ENGINEER/CONSULTANT.

g. FORMWORK

FORMWORKS SHALL BE CONSTRUCTED SUCH THAT IT WILL NOT YIELD UNDER THE LOAD AND SHALL BE SUCH AS TO AVOID THE FORMATION OF FINE. ALL CORNERS OF CONCRETE MEMBERS SHALL BE CHAMFERED TO 25mm UNLESS NOTED OTHERWISE ON DRAWINGS. STRIPPING OF FORMS AND SHORES SHALL BE AS DESIGNATED BY THE ENGINEER/CONSULTANT. THE FOLLOWING MAYBE USED AS A GUIDE.

	MIN. TIME
SHORING UNDER GIRDERS, BEAMS, FRAMES. . . .	14 DAYS
DECK SLABS	14 DAYS
WALLS.	7 DAYS
COLUMNS.	7 DAYS
SIDES OF BEAMS AND ALL OTHER VERTICAL SURFACES	2 DAYS

h. PROTECTION AND CURING OF CONCRETE

CONCRETE SURFACES SHALL BE PROTECTED FROM HARMFULS EFFECTS OF SUN, WIND AND RUNNING WATERS AND SHALL BE KEPT DAMP FOR AT LEAST 7 DAYS.

6. EMBANKMENT CONSTRUCTION SEQUENCE

APPROACH EMBANKMENT SHALL BE CONSTRUCTED PRIOR TO DRIVING OF ABUTMENT PILES.

7. (a) REINFORCED CONCRETE PILES/TEST PILES

ALL PILES SHALL BE 400mm x 400mm AND 450mm x 450mm PRECAST REINFORCED CONCRETE, FRESH OR SALT WATER TYPE, UNLESS OTHERWISE NOTED. ALL PRECAST R.C. PILES SHALL BE DRIVEN TO A MINIMUM BEARING CAPACITY OF 50 TONNES (490 KN) AND 70 TONNES (680 KN), RESPECTIVELY EACH AND TO THE FULL AUTHORIZED PAY LENGTH AND IN ACCORDANCE WITH ITEM 400 (13) (PILE DRIVING) OF THE STANDARD SPECIFICATIONS FOR ROADS AND BRIDGES, VOL.II 1995. ACTUAL CASTING LENGTH SHALL BE DETERMINED FROM THE RESULT OF DRIVING TEST PILE.
CUT–OFF SHALL BE AUTHORIZED ONLY UPON PRIOR APPROVAL OF THE ENGINEER/CONSULTANT. ALL PILES SHALL BE PROVIDED WITH METAL SHOES FOR HARD DRIVING. TEST PILE SHALL BE DRIVEN AS DIRECTED BY THE ENGINEER/CONSULTANT.

(b) STEEL H–PILES/SHEET PILES

THE MINIMUM QUANTITY REQUIREMENT FOR FOUNDATION PILING SHALL ONFORM TO THE SPECIFICATION FOR STRUCTURAL STEEL FOR BRIDGES, AASHTO M270 (ASTM A 709) GRADE 36 AND/OR JIS G 3101 SS400.
FULL–LENGTH PILES SHALL BE USED WHERE PRACTICABLE.
IF SPLICING IS PERMITTED, THE METHOD OF SPLICING SHALL BE AS SHOWN ON THE PLANS OR AS APPROVED BY THE ENGINEER/CONSULTANT.

GENERAL NOTES FOR BRIDGES
(SHEET 2 OF 2)

8. STRUCTURAL STEEL

THE CONTRACTOR SHALL PREPARE AND SUBMIT SHOP DRAWINGS FOR ALL STRUCTURAL STEEL WORK. THESE SHOP DRAWINGS SHALL BE APPROVED BY THE ENGINEER BEFORE ANY FABRICATION COMMENCES.

9. SHORING

(a) CAMBER FOR REINFOCED CONCRETE SUPERSTRUCTURES WERE DETERMINED BASED ON THE USE OF SHORINGS DURING CONSTRUCTION.

(b) CAMBER FOR COMPOSITE SUPERSTRUCTURES WITH PRECAST PRESTRESSED GIRDERS WERE DETERMINED BASED ON UNSHORED CONDITIONS.

10. EXCAVATION

EXCAVATION FOR STRUCTURES SHALL BE TO THE NEAT LINES OF FOOTING OR AS SPECIFIED IN THE STANDARD SPECIFICATIONS.

11. WATER ELEVATION

WATER ELEVATIONS SHOWN ON PLANS ARE APPROXIMARE ONLY AND VARIATION FOUND DURING CONSTRUCTION SHALL NOT BE CONSIDERED AS A BASIS FOR EXTRA COMPENSATION.

12. DETOUR

THE CONTRACTOR SHALL CONSTRUCT AND MAINTAIN DETOUR BRIDGES, AND/OR ROADS DURING CONSTRUCTION TO ALLOW CONTINUOUS FLOW OF TRAFFIC. THEY SHALL BE CONSTRUCTED ON LOCATION AS SHOWN ON PLANS OR AS DIRECTED BY THE ENGINEER/CONSULTANT. NO ADDITIONAL COST SHALL BE ALLOWED FOR ANY RELOCATION OF DETOUR.

13. PRESTRESSED CONCRETE

GIRDER DESIGN GUIDE

a.) POST-TENSIONING : THE PROPOSED TYPE OF TENDONS WHICH WILL BE USED IN THE POST-TENSIONED DESIGNS, ALL NECESSARY ADDITIONAL DETAILS INCLUDING THOSE FOR END ANCHORAGES, METHODS TO BE EMPLOYED AND PROCEDURES TO BE FOLLOWED, SHALL BE AS APPROVED BY THE ENGINEERS/CONSULTANT. A PORTION OF THE TENDONS SHALL BE DRAPED LONGITUDINAL IN PARABOLIC POSITIONS. ALL TENDONS SHALL BE PLACED SO THAT THEIR CENTER OF GRAVITY WILL BE AT THE POSITION SHOWN ON PLANS. THE TOTAL POST-TENSION FORCE AFTER LOSSES REQUIRED AT MIDSPAN SHALL BE PROVIDED AS CALLED FOR IN THE VARIOUS DESIGNS. THE REQUIRED FORCES AFTER LOSSES SHALL BE OBTAINED BY APPLYING INITIAL TENSILE FORCES OF SUFFICIENT MAGNITUDE TO ALLOW FOR ALL SUBSEQUENT LOSSES, INCLUDING THOSE FOR ELASTIC SHORTENING, SHRINKAGE, CREEP, RELAXATION, FRICTION, AND EFFICIENCY OF END ANCHORAGES. AFTER SECURING THE END ANCHORAGES ALL TENDONS SHALL BE PRESSURE GROUTED IN THEIR CONDUITS IN ACCORDANCE WITH "SPECIFICATIONS".

b.) CONCRETE FOR GIRDERS SHALL BE A MINIMUM STRENGTH OF 41 N/mm^2 (6,000 PSI) AT THE AGE OF 28 DAYS.

c.) CONCRETE FOR CAST-IN-PLACE SLAB HAVE A MINIMUM STRENGTH 21 N/mm^2 (3,000 PSI) AT THE AGE OF 28 DAYS.

d.) THE CONTRACTOR MAY PROPOSE ANY ALTERNATIVE TENDON SIZE AND LAYOUT AND SUBJECT SHALL MEET THE APPROVAL OF THE ENGINEER.

e.) THE REQUIRED STRENGTH OF CONCRETE AT TIME OF TENSIONING SHALL BE 35 MPa (5,000 PSI). A GRID CONSISTING OF ø12 BARS AT 100 CENTERS IN BOTH DIRECTIONS SHALL BE PLACED NEAR EACH ANCHORAGE OF THE POST-TENSIONING SYSTEM.

f.) HANDLING PRESTRESSED CONCRETE BEAMS : THE BEAMS SHALL BE MAINTAINED IN AN UPRIGHT POSITION AND SHALL BE LIFTED BY SUITABLE DEVICES PROVIDED AT THE ENDS OF THE BEAMS. ATTENTION IS DIRECTED TO THE INCREASED DIFFICULTY OF LIFTING BEAMS WITHOUT END BLOCKS. THE CONTRACTORS PROPOSED LIFTING DETAILS SHOULD BE GIVEN CAREFUL CONSIDERATION BEFORE BEING SUBMITTED ON SHOP DRAWING FOR APPROVAL. THE USE OF HOLES FOR LIFTING PURPOSES WILL NOT BE PERMITTED.

g.) CONTRACTOR SHALL SUBMIT FOR APPROVAL BY THE ENGINEER THE CALCULATED ELONGATION OF THE PRESTRESSING TENDONS CORRESPONDING TO THE REQUIRED JACKING FORCES.

h.) SHOP DRAWING SHALL SUBMIT FOR APPROVAL PRIOR TO FABRICATION.

14. DRAWINGS

a.) ALL ELEVATIONS, STATIONING AND DIMENSIONS SHALL BE VERIFIED PRIOR TO CONSTRUCTION.

b.) ALL QUANTITIES SHALL BE VERIFIED DURING CONSTRUCTION.

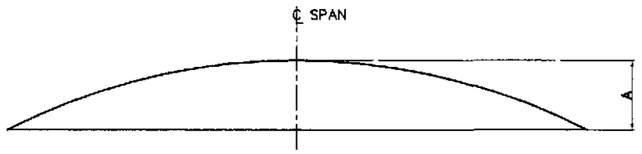

DEAD LOAD CAMBER DIAGRAM

A = FABRICATION CAMBER - ESTIMATED PRESTRESS CAMBER LESS DEFLECTION DUE TO GIRDER DEAD LOAD

SYMBOLS

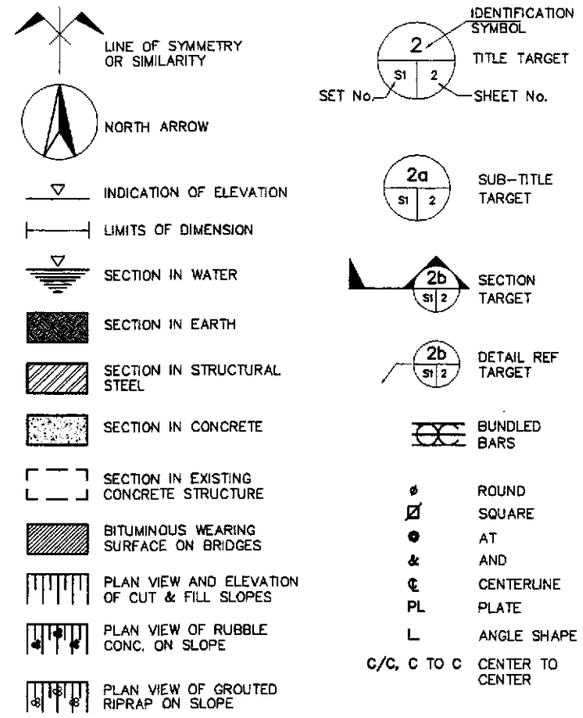

ABBREVIATIONS

ABT	ABOUT	kPa	KILOPASCAL
ABUT	ABUTMENT	m	METER
BEG	BEGINNING	mm	MILLIMETER
BET	BETWEEN	MAX	MAXIMUM
BOTT	BOTTOM	MFWL	MAX. FLOOD WATER LEVEL
BR	BRIDGE	MIN	MINIMUM
BRG	BEARING	MO	MIDDLE ORDINATE
CLR	CLEAR	MPa	MEGAPASCAL
cm	CENTIMETER	N	NEWTON
COL	COLUMN	NF	NEAR FACE
CONC	CONCRETE	No.	NUMBER
CONST	CONSTRUCTION	O.C.	ON CENTER
CTR	CENTER	PEJ	PREMOULDED EXPANSION JOINT
DET	DETAIL	PVC	POLYVINYL CHLORIDE
DIAM	DIAMETER	PVI	POINT OF VERT. INTERSECTION
DIAPH	DIAPHRAGM	QTY	QUANTITY
DWG	DRAWING	R	RADIUS
EA	EACH	RC	REINFORCED CONCRETE
EF	EACH FACE	RDWY	ROADWAY
ELEV	ELEVATION	REINF	REINFORCEMENT
ENGR	ENGINEER	SDWK	SIDEWALK
EQ	EQUAL	SL	SLOPE
EW	EACHWAY	SP	SPIRAL
EXP	EXPANSION	SPCD	SPACED
EXT	EXTERIOR	SPCS	SPACES
EXIST	EXISTING	STD	STANDARD
FF	FAR FACE	STIR	STIRRUP
FTG	FOOTING	STA	STATION
GEN	GENERAL	STRUCT	STRUCTURE
HOR	HORIZONTAL	SYMM	SYMMETRY
HW	HIGH WATER	THK	THICK
INT	INTERIOR	TYP	TYPICAL
INTERM	INTERMEDIATE	VAR	VARIABLE
JT	JOINT	VERT	VERTICAL
L	LENGTH	VOL	VOLUME
LG	LONG	W	WIDTH
kg	KILOGRAM	W/	WITH
kN	KILONEWTON	&	AND

JICA
JAPAN INTERNATIONAL COOPERATION AGENCY

KEI KATAHIRA & ENGINEERS INTERNATIONAL
YEC YACHIYO ENGINEERING CO., LTD.

	DATE	SIGNATURE
DESIGNED	9/21/02	E.N. SALLAN
CHECKED	9/25/02	M. BANCIL
SUBMITTED	10/4/02	TEAM LEADER

REPUBLIC OF THE PHILIPPINES
DEPARTMENT OF PUBLIC WORKS AND HIGHWAYS

PJHL - PMO	BUREAU OF DESIGN		OFFICE OF THE SECRETARY	
Submitted By:	Reviewed By:	Recommended By:	Recommended By: (See cover sheet for Signature)	Approved By: (See cover sheet for Signature/Approval)
DANILO C. TRAJANO	ADRIANO M. DOROY	GILBERTO S. REYES	MANUEL M. BONGAN	SIMEON A. DATUMANONG
Project Director	Chief, Bridges Division	Director IV (OIC)	Undersecretary	Secretary

PROJECT AND LOCATION :
THE DETAILED DESIGN STUDY ON UPGRADING INTER-URBAN HIGHWAY SYSTEM ALONG THE PAN-PHILIPPINE HIGHWAY (Plaridel, Cabanatuan and San Jose Bypasses)
PLARIDEL BYPASS - CONTRACT PACKAGE III

SCALE : AS SHOWN
FULL SIZE A1

SHEET CONTENTS : GENERAL NOTES FOR BRIDGES (SHEET 2 OF 2) (INITIAL STAGE)

SHEET NO. : BG-03

BRIDGE NAME : BRIDGE NO. 9 (INITIAL STAGE)
BRIDGE LENGTH : 40.00 m
SPECIFICATION : 1 - 40.00 m SPAN TYPE VI PSCG ON SEAT TYPE ABUTMENT

SUMMARY OF QUANTITIES

PAY ITEM NO.	DESCRIPTION	UNIT	ABUTMENT		SUPER-STRUCTURE	TOTAL
			" A1 "	" A2 "		
101(2)	Removal of Existing Bridge	each				1.00
103(2)a	Bridge Excavation, Common, Above O.W.L.	cu.m.	138.00	138.00		276.00
104(3)	Embankment from Borrow Pit	cu.m.	161.00	161.00		322.00
104(4)	Embankment for Bridge Approach	cu.m.	160.00	160.00		320.00
200(1)	Aggregate Subbase Course	cu.m.	14.00	14.00		28.00
311(2)	PCC Pavement (Reinforced) t=300mm, including Dowel Bars (Approach Slab)	sq.m.	53.00	53.00		106.00
400(4)b	RC Piles (450 mm x 450 mm) Furnished	l.m.	374.00	374.00		748.00
400(13)b	RC Piles (450 mm x 450 mm) Driven	l.m.	345.00	345.00		690.00
400(15)b	Test Piles (450 mm x450 mm)	l.m.	18.25	18.25		36.50
400(19)b	Pile Shoes	each	24.00	24.00		48.00
401(1)a	Concrete Post and Railing	l.m.			80.00	80.00
404(1)	Reinforcing Steel, Grade 40	kg	3,652.00	3,652.00	19,142.00	26,446.00
404(2)	Reinforcing Steel, Grade 60	kg	6,822.00	6,822.00	1,802.00	15,446.00
405(1)b	Structural Concrete Class "A" (fc'= 21MPa)	cu.m.	112.00	112.00		224.00
405(1)d	Structural Concrete Class "A1" (fc'= 21MPa)	cu.m.			131.00	131.00
405(3)	Structural Concrete Class "C" (fc' = 21MPa)	cu.m.	6.00	6.00	25.00	37.00
405(6)	Structural Concrete Class "B" (Lean Concrete) fc'= 17MPa	cu.m.	6.00	6.00		12.00
406(1)n	Prestressed Concrete Girder Type VI Modified L=40.00m	each			5.00	5.00
407(1)c	Elastomeric Bearing Pad (600x350x50, Duro 60)	each	5.00	5.00		10.00
407(2)a	Expansion Joint, (±40mm Movement)	l.m.	10.00	10.00		20.00
407(2)g	Expansion Joint, 30mm for Bridge Sidewalk	l.m.	2.00	2.00		4.00
407(4)	Metal Drain (150 mm ø G.I. Drain Pipe)	l.m.			4.00	4.00
504(1)	Grouted Riprap, Class "A"	cu.m.	54.00	54.00		108.00

NOTE: ALL QUANTITIES SHALL BE VERIFIED DURING CONSTRUCTION

JICA
JAPAN INTERNATIONAL COOPERATION AGENCY
KATAHIRA & ENGINEERS INTERNATIONAL
YACHIYO ENGINEERING CO., LTD.

	DATE	SIGNATURE
DESIGNED	9/21/02	E. M. SALLAN
CHECKED	9/23/02	M. KIKUCHI
SUBMITTED	10/14/02	M. KIUCHI TEAM LEADER

REPUBLIC OF THE PHILIPPINES
DEPARTMENT OF PUBLIC WORKS AND HIGHWAYS

PJHL - PMO	BUREAU OF DESIGN		OFFICE OF THE SECRETARY	
Submitted By:	Reviewed By:	Recommended By:	Recommended By: (See cover sheet for Signature)	Approved By: (See cover sheet for Signature/Approval)
DANILO C. TRAJANO	ADRIANO M. DOROY	GILBERTO S. REYES	MANUEL M. BONOAN	SIMEON A. DATUMANONG
Project Director	Chief, Bridges Division	Director IV (OIC)	Undersecretary	Secretary

PROJECT AND LOCATION :
THE DETAILED DESIGN STUDY ON UPGRADING INTER-URBAN HIGHWAY SYSTEM ALONG THE PAN-PHILIPPINE HIGHWAY (Plaridel, Cabanatuan and San Jose Bypasses)
PLARIDEL BYPASS - CONTRACT PACKAGE III

SCALE : N. T. S. FULL SIZE A1

SHEET CONTENTS : BRIDGE NO. 9 SUMMARY OF QUANTITIES (INITIAL STAGE)

SHEET NO. : BG-04

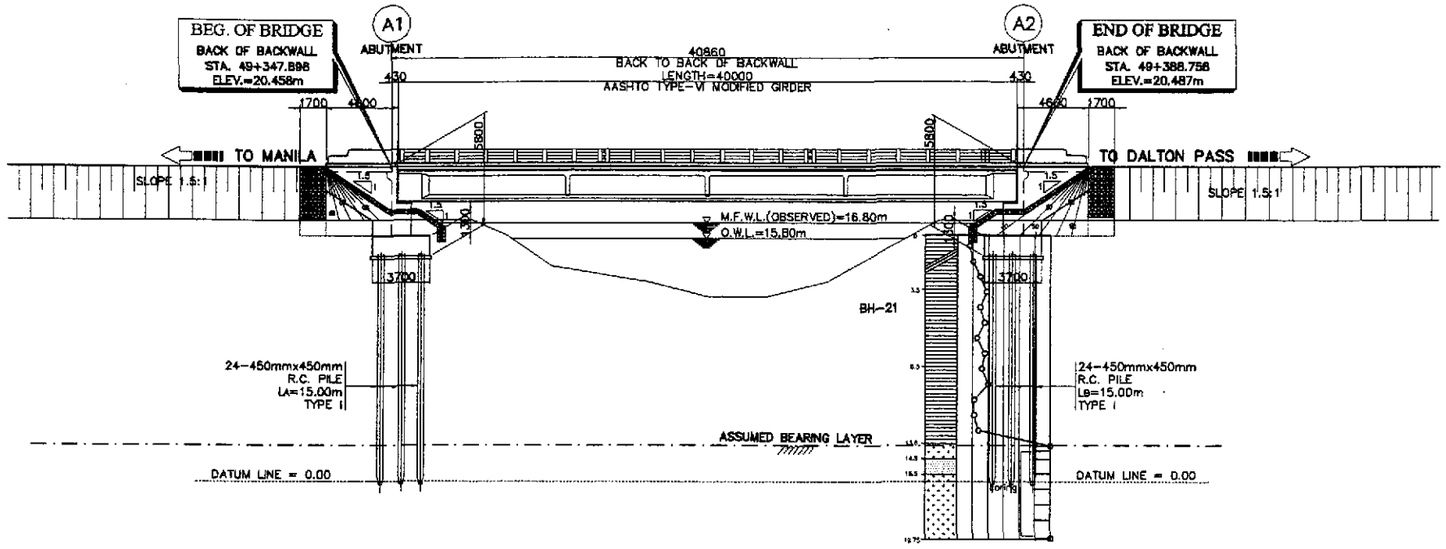

1 GENERAL ELEVATION
SCALE 1:200

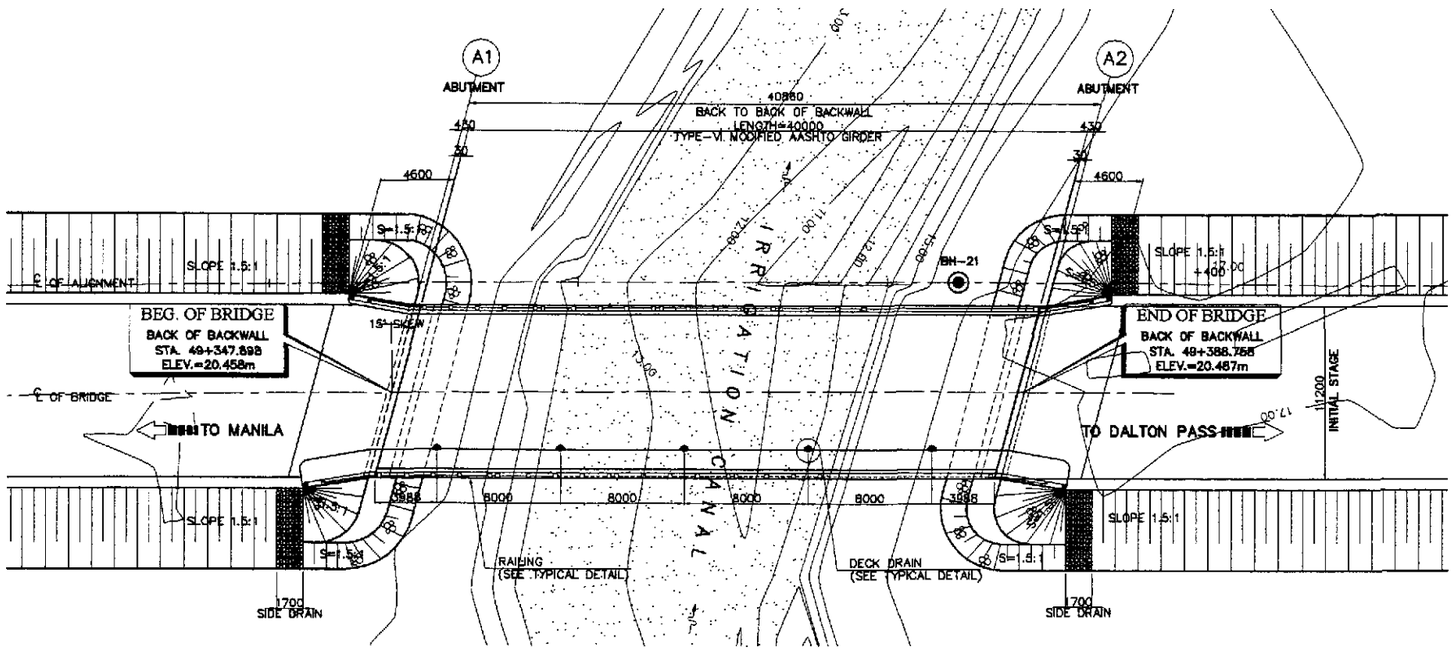

2 GENERAL PLAN
SCALE 1:200

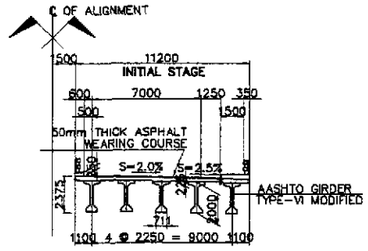

3 SECTION @ MIDSPAN
SCALE 1:200

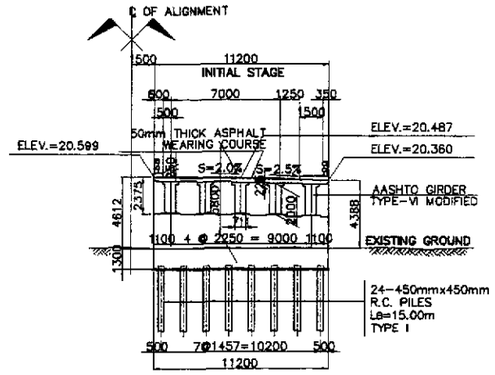

4 SECTION @ ABUTMENT
SCALE 1:200

HYDRAULIC DESIGN DATA	
VELOCITY @ 50 YEARS, V_{50}	1.924 m/sec
DISCHARGE @ 50 YEARS, Q_{50}	119.800 cu.m/sec
CATCHMENT AREA, CA	11.650 sq. km

NOTE :

PRIOR TO CONSTRUCTION SOIL INVESTIGATION SHALL BE CONDUCTED FOR CONFIRMATION OF ASSUMED BEARING CAPACITY AND FOOTING ELEVATION.

THE PILE LENGTH RECOMMENDED ARE MINIMUM. SHOULD THE SOIL AT THE RECOMMENDED LENGTH BE INADEQUATE BEARING MATERIAL, LENGTH SHALL BE INCREASED. THE MINIMUM EMBEDMENT LENGTH INTO ADEQUATE SOIL FOR 400 x 400 R. C. PILE IS 1000mm WHILE FOR 450 x 450 R. C. PILE IS 1200mm.

PERFECTO L. ZAPLAN JR.
OIC Chief, Hydraulics Division, BOD

A PLARIDEL BYPASS BRIDGE NO. 9 (STA. 49+347.898)
SCALE AS SHOWN

JICA
JAPAN INTERNATIONAL COOPERATION AGENCY
KATAHIRA & ENGINEERS INTERNATIONAL
YACHIYO ENGINEERING CO., LTD.

	DATE	SIGNATURE
DESIGNED	9/2/02	E.P.N. SALLAN
CHECKED	9/25/02	K. KOBAYASHI
SUBMITTED	10/14/02	M. SUZUKI TEAM LEADER

REPUBLIC OF THE PHILIPPINES
DEPARTMENT OF PUBLIC WORKS AND HIGHWAYS

PJHL – PMO	BUREAU OF DESIGN		OFFICE OF THE SECRETARY	
Submitted By:	Reviewed By:	Recommended By:	Recommended By: (See cover sheet for Signature)	Approved By: (See cover sheet for Signature/Approval)
DANILO C. TRAJANO	ADRIANO M. DOROY	GILBERTO S. REYES	MANUEL M. BONOAN	SIMEON A. DATUMANONG
Project Director	Chief, Bridges Division	Director IV (OIC)	Undersecretary	Secretary

PROJECT AND LOCATION :
THE DETAILED DESIGN STUDY ON UPGRADING INTER-URBAN HIGHWAY SYSTEM ALONG THE PAN-PHILIPPINE HIGHWAY (Plaridel, Cabanatuan and San Jose Bypasses)
PLARIDEL BYPASS - CONTRACT PACKAGE III

SCALE : 1 : 200 FULL SIZE A1

SHEET CONTENTS : BRIDGE NO. 9 GENERAL PLAN, ELEVATION AND SECTIONS (INITIAL STAGE)

SHEET NO. : B9-01

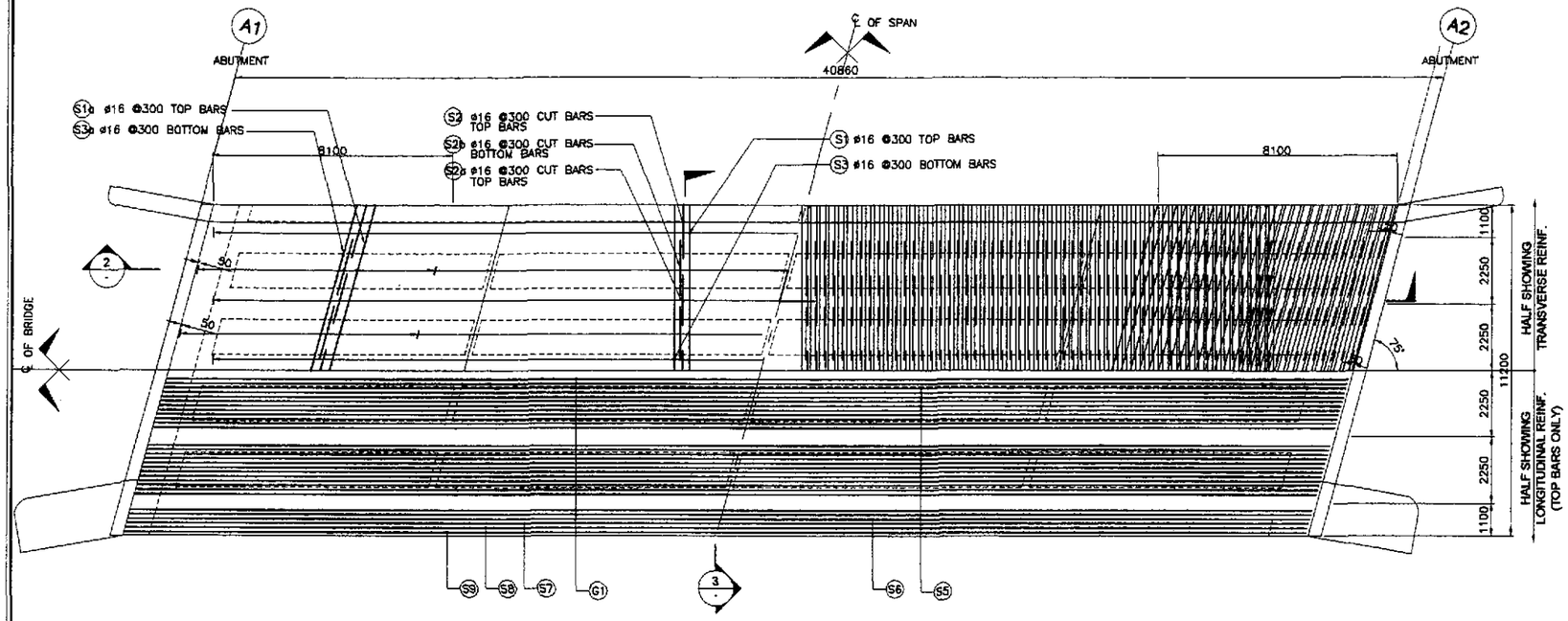

1 FRAMING PLAN
SCALE 1 : 100

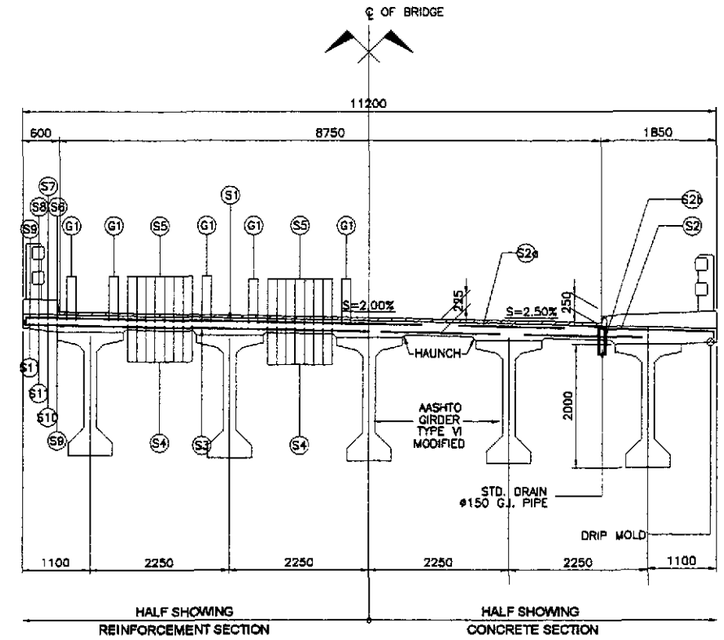

3 TYPICAL CROSS-SECTION
SCALE 1 : 50

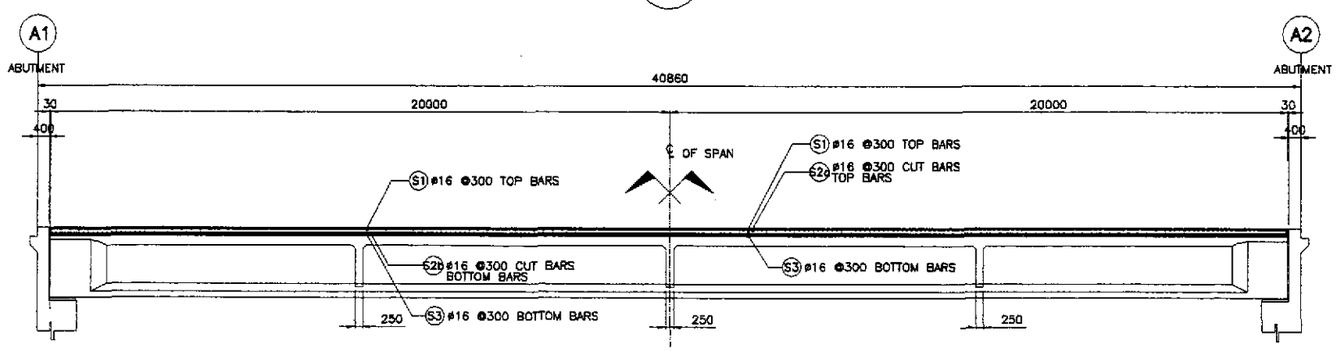

2 LONGITUDINAL SECTION
SCALE 1 : 100

BAR BENDING DIAGRAM

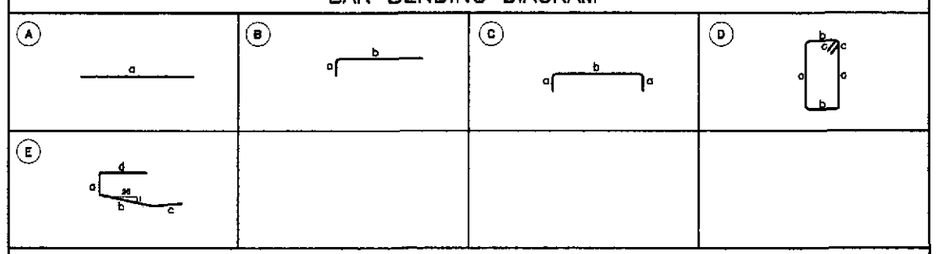

SCHEDULE OF REINFORCEMENT

LOCATION	CONCRETE VOLUME (m^3)	BAR MARK	BAR SIZE	QTY.	SPACING	BAR SHAPE	DIMENSIONS (mm) OUT TO OUT a	b	c	d	LENGTH EACH BAR (mm)	TOTAL LENGTH (m)	UNIT WT. (kg/m)	WEIGHT IN (kg)	REBAR RATIO (kg/m^3)
DECK SLAB	111.97	G1	16	20	AS SHOWN	A	39920	–	–	–	39920	798.40	1.579	1261	138.33
		S1	16	124	300	C	145	11100	145	–	11390	1412.36	1.579	2231	
		S1a	16	56	300	C	145	11500	145	–	11790	660.24	1.579	1043	
		S2	16	268	300	B	145	1800	–	–	1945	521.26	1.579	824	
		S2a	16	402	300	A	1700	–	–	–	1700	683.40	1.579	1080	
		S2b	16	536	300	A	1950	–	–	–	1950	1045.20	1.579	1651	
		S3	16	124	300	A	11100	–	–	–	11100	1376.40	1.579	2174	
		S3a	16	56	300	A	6150	–	–	–	6150	135.30	1.579	214	
		S4	16	32	150	A	39920	–	–	–	39920	1277.44	1.579	2018	
		S5	16	32	150	A	39920	–	–	–	39920	1277.44	1.579	2018	
		S6	16	2	AS SHOWN	A	39920	–	–	–	39920	79.84	1.579	127	
		S7	16	2	AS SHOWN	A	39920	–	–	–	39920	79.84	1.579	127	
		S8	16	2	AS SHOWN	A	39920	–	–	–	39920	79.84	1.579	127	
		S9	16	2	AS SHOWN	A	39920	–	–	–	39920	79.84	1.579	127	
		S10	16	2	AS SHOWN	A	39920	–	–	–	39920	79.84	1.579	127	
		S11	16	4	AS SHOWN	A	39920	–	–	–	39920	159.68	1.579	253	
		S12	12	178	450	E	145	600	900	300	1945	346.21	0.888	308	
		S13	16	24	300	A	11500	–	–	–	11500	276.00	1.579	436	
		S14	16	44	300	A	6150	–	–	–	6150	270.60	1.579	428	
TOTAL	111.97	GRADE 40 TOTAL = 15,489 kgs													

ESTIMATED QUANTITIES OF SUPERSTRUCTURE

ITEM NO.	DESCRIPTION	UNIT	TOTAL
404(1)a	REINFORCING STEEL GRADE 40	kgs.	35868
	DECK SLAB	16513	
	DIAPHRAGM	502	
	GIRDER	13030	
	SIDEWALK, RAILING, & POST	4595	
	APPROACH SLAB	1228	
404(1)b	REINFORCING STEEL GRADE 60	kgs.	15903
	DECK SLAB	0	
	DIAPHRAGM	1802	
	GIRDER	9475	
	SIDEWALK, RAILING, & POST	708	
	APPROACH SLAB	3918	
405(1)	STRUCTURAL CONCRETE	cu. m.	347
	DECK SLAB	111.97	
	DIAPHRAGM	18.28	
	GIRDER	160.35	
	SIDEWALK, RAILING, & POST	24.50	
	APPROACH SLAB	31.57	

JICA
JAPAN INTERNATIONAL COOPERATION AGENCY
KEI KATAHIRA & ENGINEERS INTERNATIONAL
YEC YACHIYO ENGINEERING CO., LTD.

	DATE	SIGNATURE
DESIGNED	9/21/02	E. N. SALLAN
CHECKED	9/23/02	A. KOBAYASHI
SUBMITTED	10/4/02	M. MIOCHI TEAM LEADER

REPUBLIC OF THE PHILIPPINES
DEPARTMENT OF PUBLIC WORKS AND HIGHWAYS

PJHL – PMO	BUREAU OF DESIGN		OFFICE OF THE SECRETARY	
Submitted By:	Reviewed By:	Recommended By:	Recommended By: (See cover sheet for Signature)	Approved By: (See cover sheet for Signature/Approval)
DANILO C. TRAJANO	ADRIANO M. DOROY	GILBERTO S. REYES	MANUEL M. BONGAN	SIMEON A. DATUMANONG
Project Director	Chief, Bridges Division	Director IV (OIC)	Undersecretary	Secretary

PROJECT AND LOCATION :
THE DETAILED DESIGN STUDY ON UPGRADING INTER-URBAN HIGHWAY SYSTEM ALONG THE PAN-PHILIPPINE HIGHWAY (Plaridel, Cabanatuan and San Jose Bypasses)
PLARIDEL BYPASS - CONTRACT PACKAGE III

SCALE : AS SHOWN
FULL SIZE A1

SHEET CONTENTS :
BRIDGE NO. 9
DECK FRAMING PLAN AND SECTION (INITIAL STAGE)

SHEET NO. : B9-02

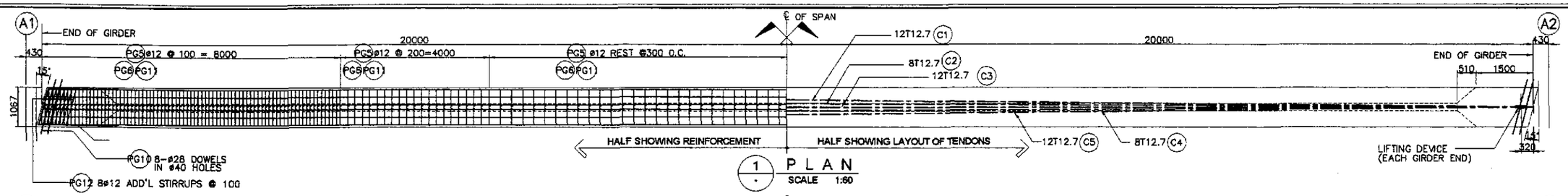

1 PLAN
SCALE 1:60

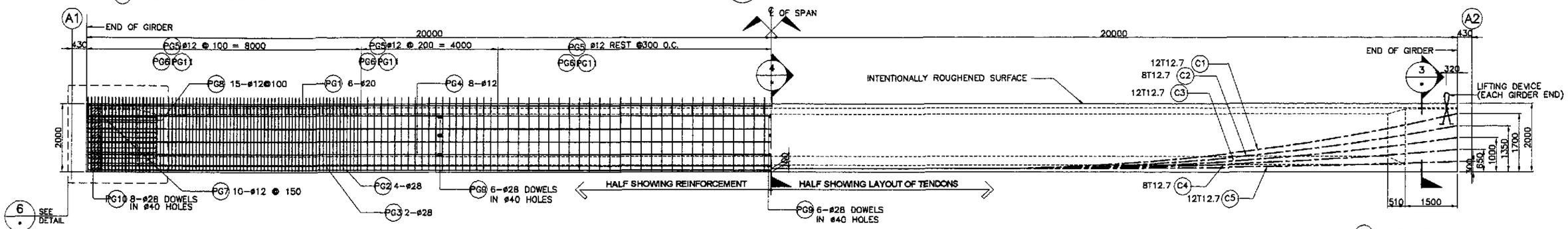

2 PRESTRESSED GIRDER ELEVATION
SCALE 1:60

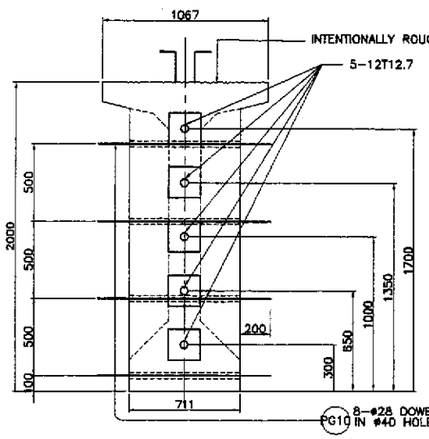

3 SECTION AT END
SCALE 1:20

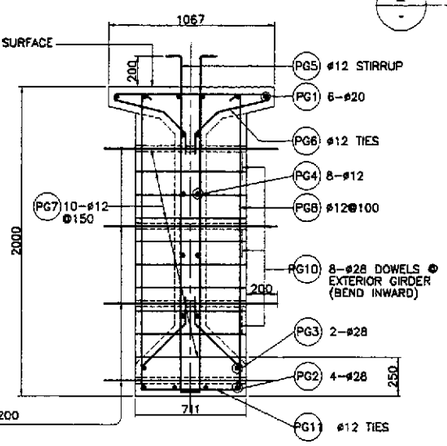

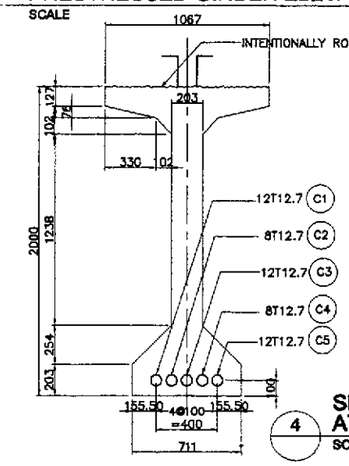

4 SECTION AT MIDSPAN
SCALE 1:20

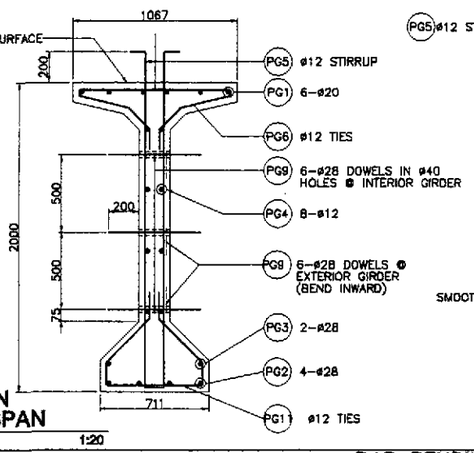

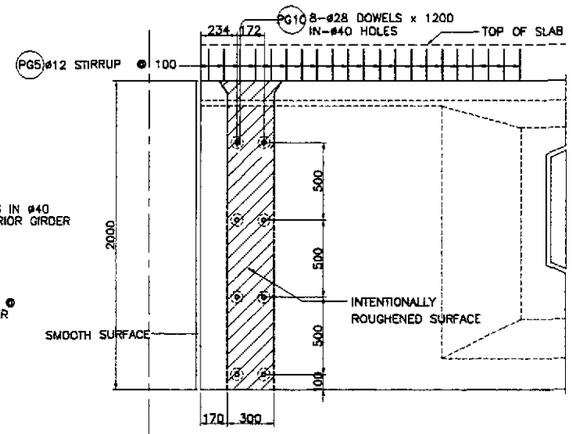

5 DOWELS AT END BLOCK
SCALE 1:20

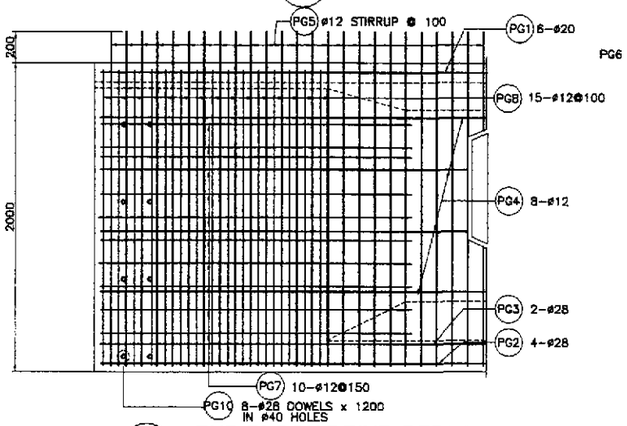

6 END BLOCK REINF. DETAIL
SCALE 120

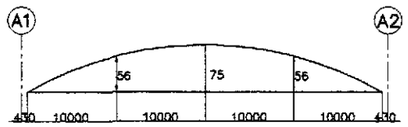

7 CAMBER DIAGRAM
NOT TO SCALE

NOTES ;

1.) SEE GENERAL NOTES, -2, FOR GIRDER DESIGN GUIDE.
2.) JACKING FORCE PER GIRDER, Pj = 8261 KN.
3.) JACKING WILL BE DONE AT BOTH ENDS.
4.) FINAL PRESTRESSING FORCE @ MIDSPAN, F_{NET} = 6023 KN.

BAR BENDING DIAGRAM

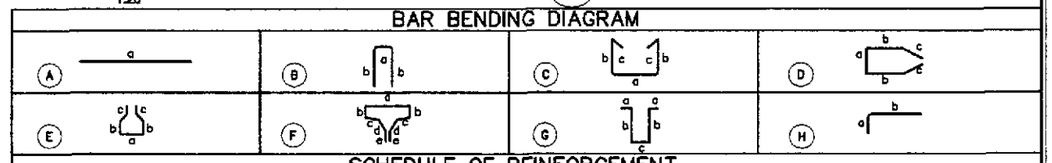

SCHEDULE OF REINFORCEMENT

STRUCTURE COMPONENT	BAR MARK	SIZE (mm)	QTY.	SPACING	BAR SHAPE	DIMENSION(mm) a	b	c	d	e	LENGTH PER BAR (mm)	TOTAL LENGTH (m)	UNIT WEIGHT (kg/m)	TOTAL WEIGHT (kg)	CONC. VOLUME (cu.m)	REBAR RATIO (kg/cu.m)	REMARKS
GIRDER	PG1	20	6	AS SHOWN	A	39920	–	–	–	–	39920	239.52	2.466	591	32.07	140.35	QUANTITIES ARE FOR ONE (1) GIRDER ONLY
	PG2	28	4	AS SHOWN	A	39920	–	–	–	–	39920	159.68	4.833	772			
	PG3	28	2	AS SHOWN	A	39920	–	–	–	–	39920	79.84	4.833	386			
	PG4	12	8	AS SHOWN	A	39920	–	–	–	–	39920	319.36	0.888	284			
	PG5	12	252	100	G	100	2150	103	–	–	4603	1159.96	0.888	1031			
	PG6	12	252	100	F	1000	50	340	200	150	2480	624.96	0.888	555			
	PG7	12	20	150	D	635	1450	550	–	–	4635	92.70	0.888	83			
	PG8	12	30	100	C	635	1920	150	–	–	4775	143.25	0.888	128			
	PG9	28	18	AS SHOWN	A	603	–	–	–	–	603	10.85	4.833	53			
	PG10	28	16	AS SHOWN	A	1200	–	–	–	–	1200	19.20	4.833	93			
	PG11	12	252	100	E	635	160	400	150	–	2055	517.86	0.888	460			
	PG12	12	16	100	B	635	1920	–	–	–	4475	71.60	0.888	64			

GRADE 40 TOTAL = 2,606 kgs
GRADE 60 TOTAL = 1,895 kgs

JICA
JAPAN INTERNATIONAL COOPERATION AGENCY
KATAHIRA & ENGINEERS INTERNATIONAL
YACHIYO ENGINEERING CO., LTD.

	DATE	SIGNATURE
DESIGNED	9/2/02	E. N. SALLAN
CHECKED	9/23/02	
SUBMITTED	10/14/02	TEAM LEADER

REPUBLIC OF THE PHILIPPINES
DEPARTMENT OF PUBLIC WORKS AND HIGHWAYS

PJHL – PMO	BUREAU OF DESIGN		OFFICE OF THE SECRETARY	
Submitted By:	Reviewed By:	Recommended By:	Recommended By: (See cover sheet for Signature)	Approved By: (See cover sheet for Signature/Approval)
DANILO C. TRAJANO	ADRIANO M. DOROY	GILBERTO S. REYES	MANUEL M. BONDAN	SIMEON A. DATUMANONG
Project Director	Chief, Bridges Division	Director IV (OIC)	Undersecretary	Secretary

PROJECT AND LOCATION :
THE DETAILED DESIGN STUDY ON UPGRADING INTER-URBAN HIGHWAY SYSTEM ALONG THE PAN-PHILIPPINE HIGHWAY (Plaridel, Cabanatuan and San Jose Bypasses)
PLARIDEL BYPASS - CONTRACT PACKAGE III

SCALE : AS SHOWN
FULL SIZE A1

SHEET CONTENTS :
BRIDGE NO. 9
AASHTO TYPE VI GIRDER (MODIFIED) (INITIAL STAGE)

SHEET NO. : B9-03

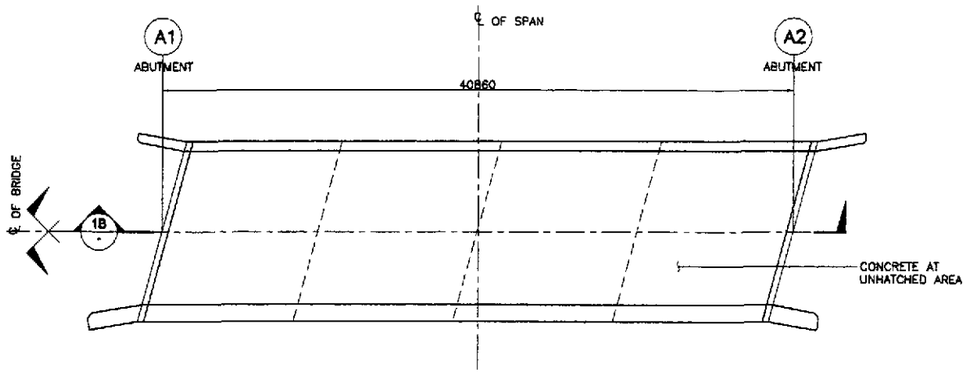

NOTES:

1. CONCRETE AT HATCHED AREAS SHALL BE PLACED AT LEAST TWENTY ONE (21) DAYS AHEAD OF CONCRETE AT UNHATCHED AREAS.
2. REINFORCEMENT SHALL BE CONTINUOUS AT CONSTRUCTION JOINTS.
3. SEE GIRDER DETAIL FOR SPACING OF ø28 DOWELS.

1A / - PLAN
SCALE 1:200

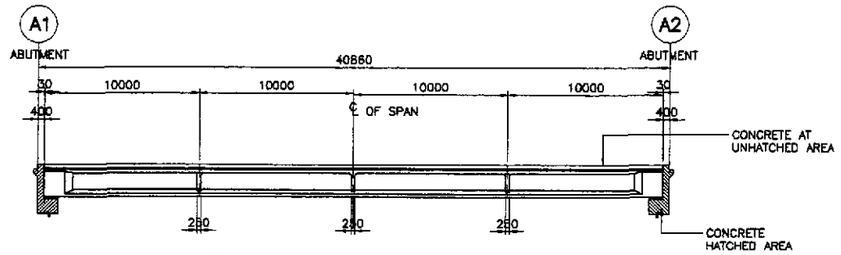

1B / - LONGITUDINAL SECTION
SCALE 1:200

1 / - CONCRETE POURING SEQUENCE
SCALE 1:200

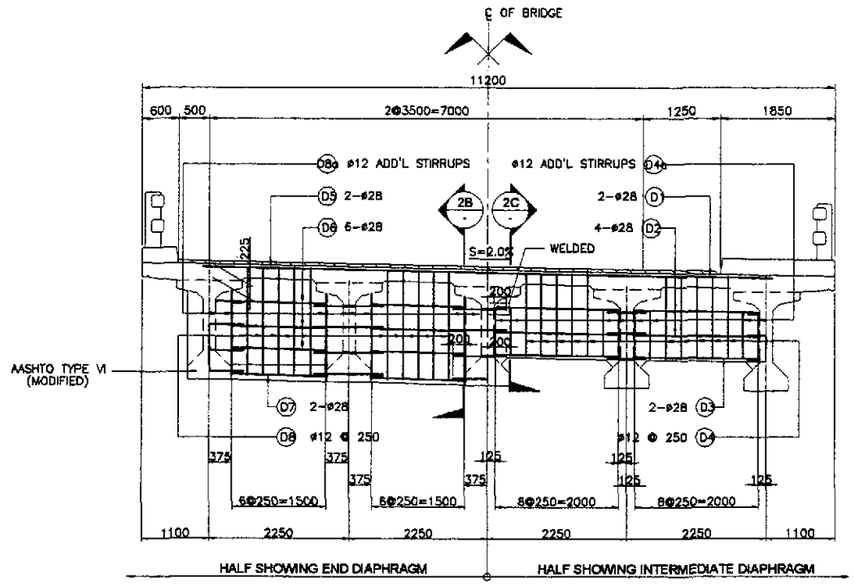

2A / - ELEVATION
SCALE 1:25

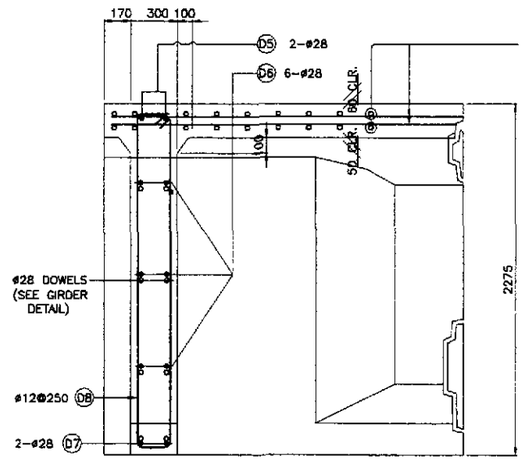

2B / - SECTION
SCALE 1:20

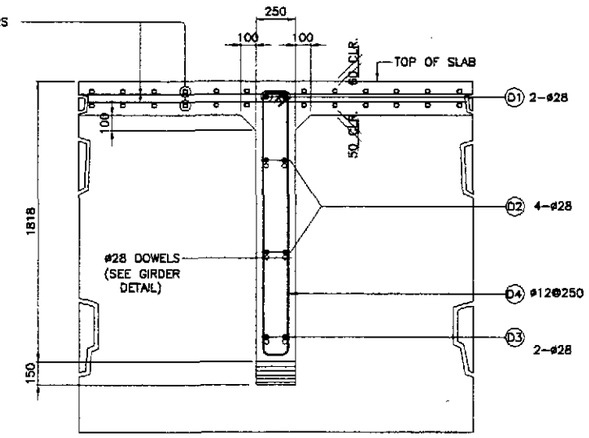

2C / - SECTION
SCALE 1:20

2 / - END & INTERMEDIATE DIAPHRAGM DETAIL
SCALE AS SHOWN

BAR BENDING DIAGRAM

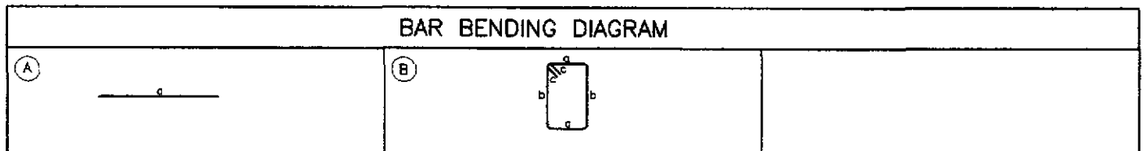

SCHEDULE OF REINFORCEMENT

STRUCTURE COMPONENT	LOCATION	CONCRETE VOLUME (m^3)	BAR MARK	BAR SIZE	QTY.	SPACING	BAR SHAPE	DIMENSIONS (mm) OUT TO OUT a	b	c	d	LENGTH PER BAR (mm)	TOTAL LENGTH (m)	UNIT WT. (kg/m)	TOTAL WEIGHT IN (kg)	REBAR RATIO (kg/m^3)	REMARKS
DIAPHRAGM	INTERMEDIATE DIAPHRAGM	10.70	D1	28	6	AS SHOWN	A	9400				9400	56.40	4.833	273	120.05	TOP BARS
			D2	28	48	AS SHOWN	A	2045				2045	98.16	4.833	475		DIST. BARS
			D3	28	24	AS SHOWN	A	2045				2045	49.08	4.833	238		BOTT. BARS
			D4	12	48	250	B	150	1700 (ave.)	150		4000	192.00	0.888	171		STIRRUPS
			D4a	12	48	200	B	150	1200	150		3000	144.00	0.888	128		ADD'L. STIRRUPS
	END DIAPHRAGM	7.57	D5	28	4	AS SHOWN	A	9400				9400	37.60	4.833	182	134.58	TOP BARS
			D6	28	48	AS SHOWN	A	2045				2045	98.16	4.833	475		DIST. BARS
			D7	28	16	AS SHOWN	A	2045				2045	32.72	4.833	159		BOTT. BARS
			D8	12	32	250	B	200	2175	150		5050	161.60	0.888	144		STIRRUPS
			D8a	12	16	AS SHOWN	B	200	1700 (ave.)	150		4100	65.60	0.888	59		ADD'L. STIRRUPS
	TOTAL	21.01											GRADE 60 TOTAL =		1802 kgs		
													GRADE 40 TOTAL =		502 kgs		

JICA
JAPAN INTERNATIONAL COOPERATION AGENCY
KEI KATAHIRA & ENGINEERS INTERNATIONAL
YCO YACHIYO ENGINEERING CO., LTD.

	DATE	SIGNATURE
DESIGNED	9/21/02	F. N. SALLAN
CHECKED	9/23/02	
SUBMITTED	10/14/02	M. KIKUCHI TEAM LEADER

REPUBLIC OF THE PHILIPPINES
DEPARTMENT OF PUBLIC WORKS AND HIGHWAYS

PJHL – PMO	BUREAU OF DESIGN		OFFICE OF THE SECRETARY	
Submitted By:	Reviewed By:	Recommended By:	Recommended By: (See cover sheet for Signature)	Approved By: (See cover sheet for Signature/approval)
DANILO C. TRAJANO	ADRIANO M. DOROY	GILBERTO S. REYES	MANUEL M. BONDAN	SIMEON A. DATUMANONG
Project Director	Chief, Bridges Division	Director IV (OIC)	Undersecretary	Secretary

PROJECT AND LOCATION :	SCALE :	SHEET CONTENTS :	SHEET NO. :
THE DETAILED DESIGN STUDY ON UPGRADING INTER-URBAN HIGHWAY SYSTEM ALONG THE PAN-PHILIPPINE HIGHWAY (Plaridel, Cabanatuan and San Jose Bypasses)	AS SHOWN	BRIDGE NO. 9 CONCRETE POURING SEQUENCE AND DIAPHRAGM DETAIL (INITIAL STAGE)	B9-04
PLARIDEL BYPASS - CONTRACT PACKAGE III	FULL SIZE A1		

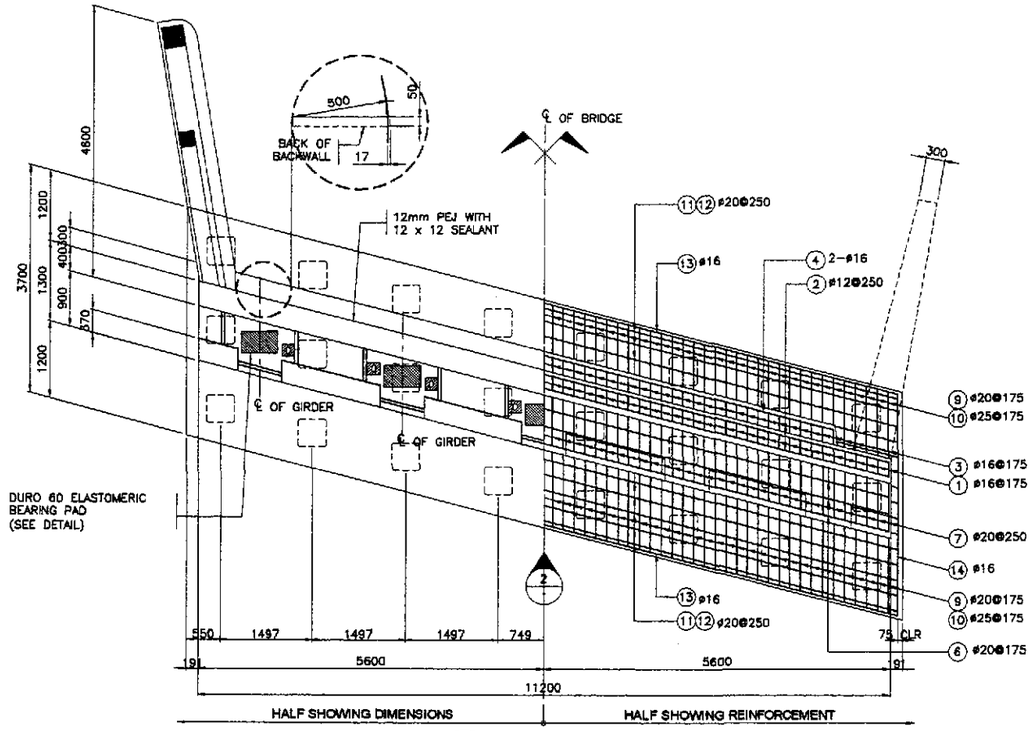

1 PLAN
SCALE 1:50

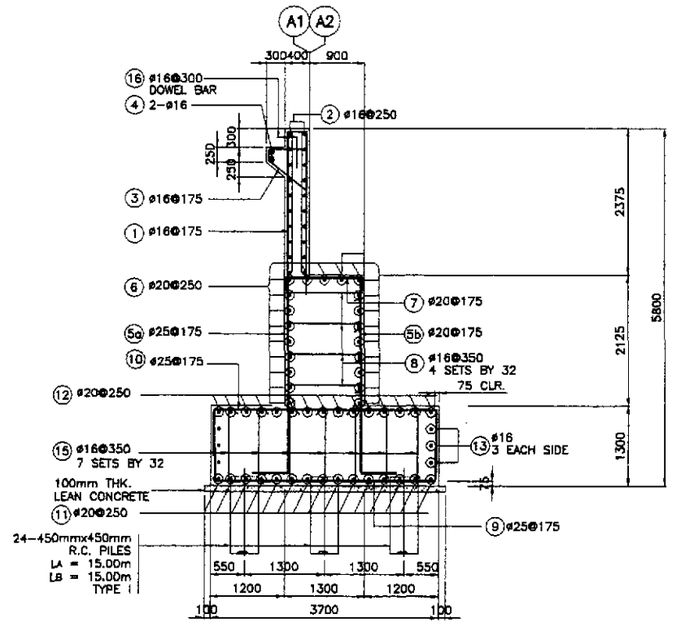

3 SECTION
SCALE 1:50

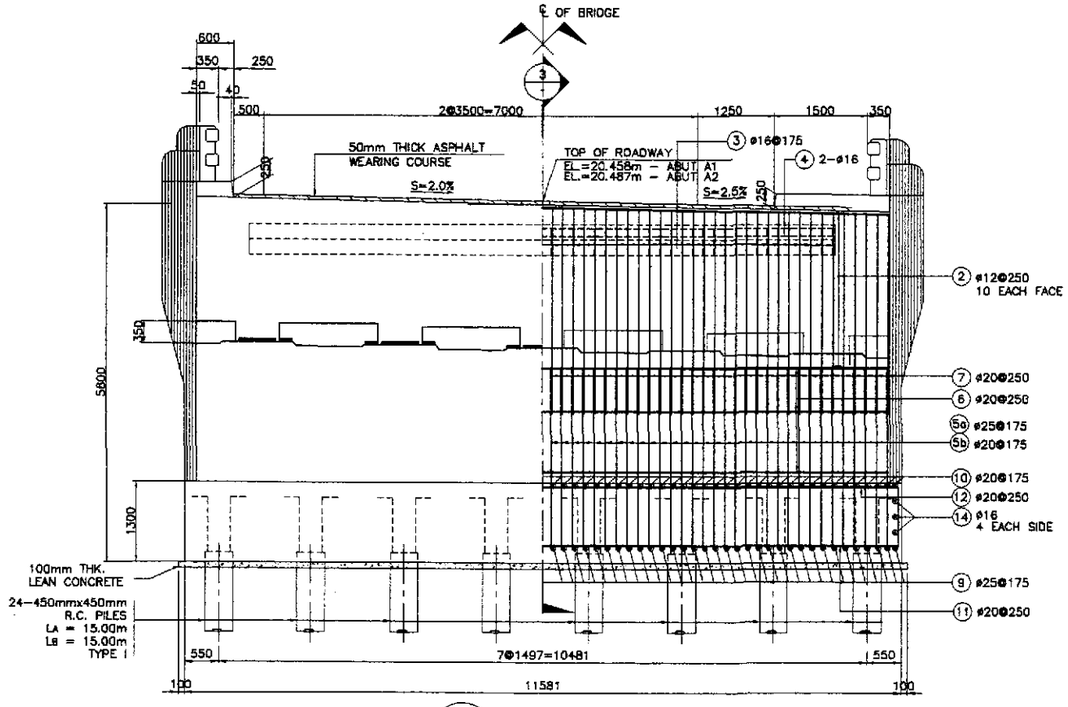

2 ELEVATION
SCALE 1:50

BAR BENDING DIAGRAM

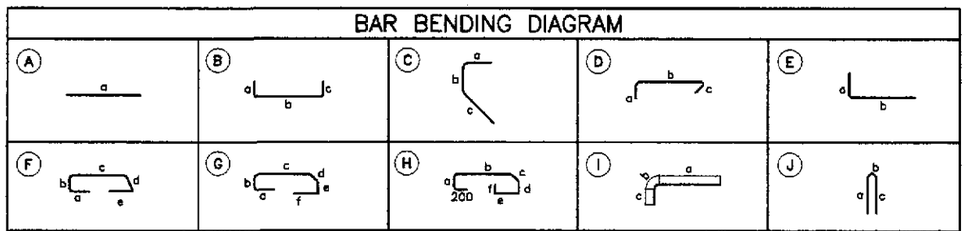

SCHEDULE OF REINFORCEMENT PER ABUTMENT

LOCATION	CONCRETE VOLUME (m^3)	BAR MARK	BAR SIZE	QTY.	SPACING	BAR SHAPE	DIMENSIONS (mm) OUT TO OUT a	b	c	d	e	f	LENGTH EA. BAR (mm)	TOTAL LENGTH (m)	UNIT WT. (kg/m)	WEIGHT (kg)	REBAR RATIO (kg/m^3)
BACKWALL	11.62	①	16	65	175	B	2600	300	2600	–	–	–	5500	357.50	1.579	565	92.74
		②	16	20	250	A	11490	–	–	–	–	–	11490	229.8	1.579	363	
		③	16	51	175	C	600	150	750	–	–	–	1500	76.50	1.579	121	
		④	16	2	AS SHOWN	A	8955	–	–	–	–	–	8955	17.91	1.579	29	
MAINWALL	30.94	⑤a	25	65	175	E	400	3250	–	–	–	–	3650	237.25	3.854	915	87.72
		⑤b	20	65	175	E	400	3250	–	–	–	–	3650	237.25	2.466	586	
		⑥	20	21	250	A	11490	–	–	–	–	–	11490	241.29	2.466	596	
		⑦	20	65	250	B	250	1200	250	–	–	–	1700	110.50	2.466	273	
		⑧	16	128	300	D	250	1200	250	–	–	–	1700	217.60	1.579	344	
FOOTING	55.71	⑨	25	66	175	B	700	3550	700	–	–	–	4950	326.70	3.854	1260	76.18
		⑩	25	66	175	B	700	3550	700	–	–	–	4950	326.70	3.854	1260	
		⑪	20	15	250	B	700	11855	700	–	–	–	13255	198.83	2.466	491	
		⑫	20	15	250	B	700	11855	700	–	–	–	13255	198.83	2.466	491	
		⑬	16	6	AS SHOWN	A	11855	–	–	–	–	–	11855	71.13	1.579	113	
		⑭	16	8	AS SHOWN	A	3550	–	–	–	–	–	3550	28.40	1.579	45	
		⑮	16	224	350	D	250	1150	250				1750	369.60	1.579	584	
DOWEL		⑯	16	34	300	E	650	500	–	–	–	–	1150	39.1	1.579	62	
TOTAL	98.27															GRADE 40 TOTAL = 2,226 kgs. GRADE 60 TOTAL = 5,872 kgs.	

JICA
JAPAN INTERNATIONAL COOPERATION AGENCY
KEI KATAHIRA & ENGINEERS INTERNATIONAL
YEC YACHIYO ENGINEERING CO., LTD.

	DATE	SIGNATURE
DESIGNED	9/21/02	K. P. GONZALES
CHECKED	9/23/02	K. SOBITASHI
SUBMITTED	9/24/02	TEAM LEADER

REPUBLIC OF THE PHILIPPINES
DEPARTMENT OF PUBLIC WORKS AND HIGHWAYS

PJHL – PMO	BUREAU OF DESIGN		OFFICE OF THE SECRETARY	
Submitted By:	Reviewed By:	Recommended By:	Recommended By: (See cover sheet for Signature)	Approved By: (See cover sheet for Signature/Approval)
DANILO C. TRAJANO	ADRIANO M. DOROY	GILBERTO S. REYES	MANUEL M. BONGAN	SIMEON A. DATUMANONG
Project Director	Chief, Bridges Division	Director IV (OIC)	Undersecretary	Secretary

PROJECT AND LOCATION :
THE DETAILED DESIGN STUDY ON UPGRADING INTER-URBAN HIGHWAY SYSTEM ALONG THE PAN-PHILIPPINE HIGHWAY (Plaridel, Cabanatuan and San Jose Bypasses)
PLARIDEL BYPASS - CONTRACT PACKAGE III

SCALE : AS SHOWN
FULL SIZE A1

SHEET CONTENTS :
BRIDGE NO. 9
ABUTMENT A1 & A2
MAINWALL REINFORCEMENT DETAILS
(INITIAL STAGE)

SHEET NO. : B9-05

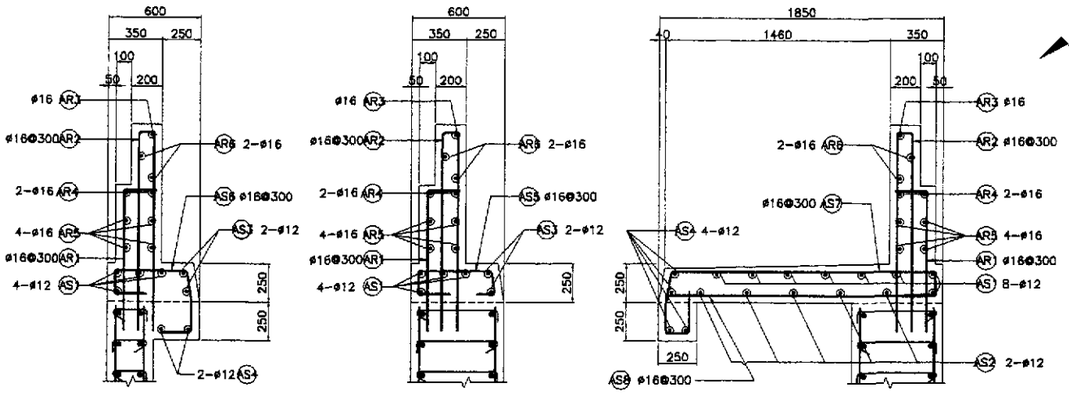

5A SECTION SCALE 1:20

5B SECTION SCALE 1:20

5C SECTION SCALE 1:20

5 APPROACH RAIL DETAILS SCALE 1:20

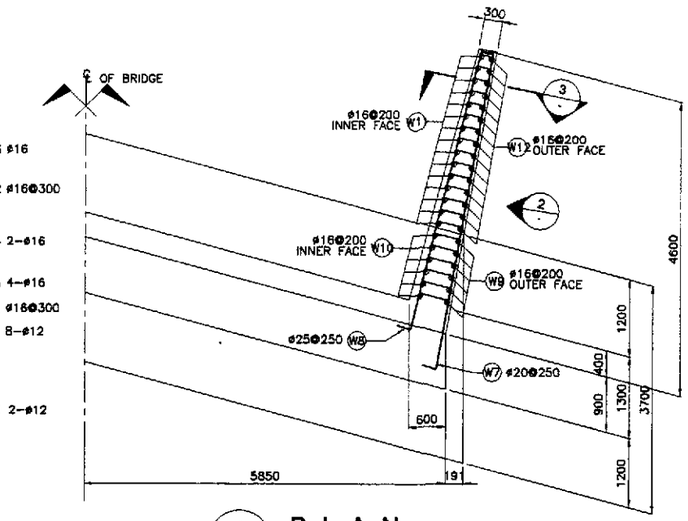

1 PLAN SCALE 1:50

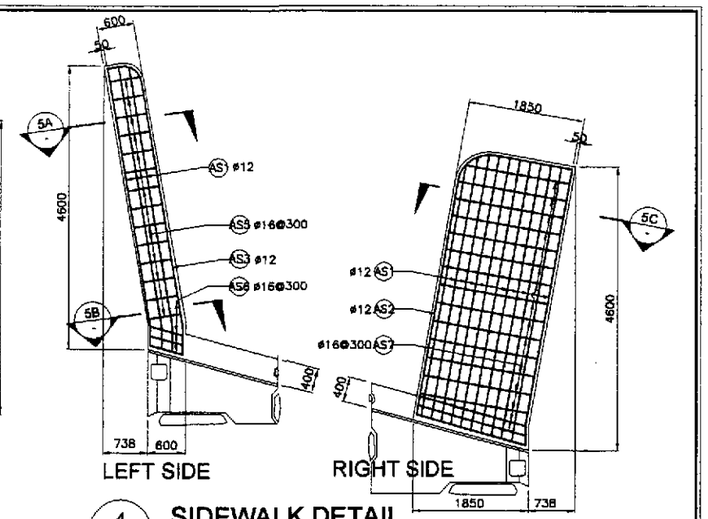

4 SIDEWALK DETAIL SCALE 1:50

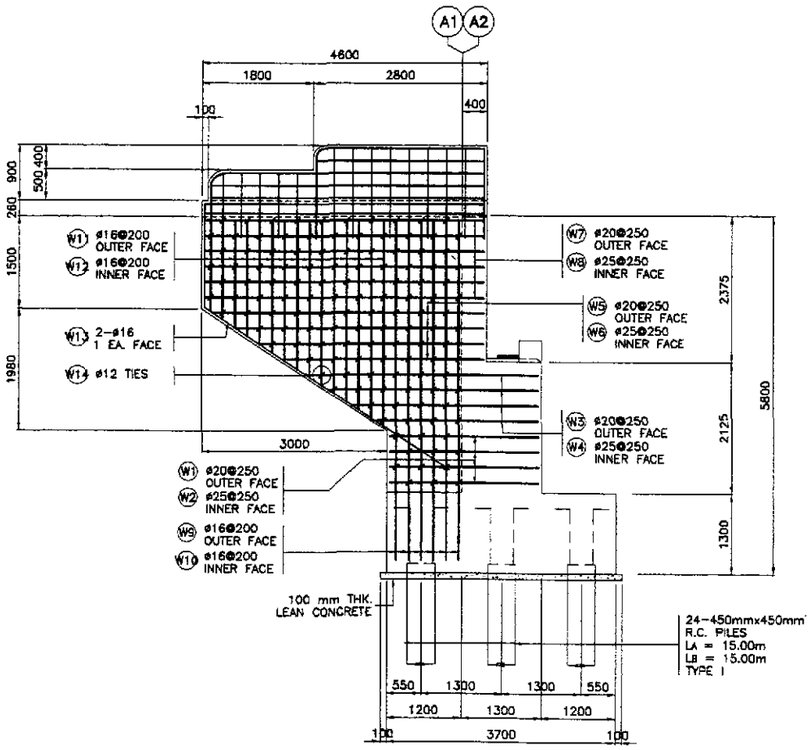

2 WINGWALL ELEVATION SCALE 1:50

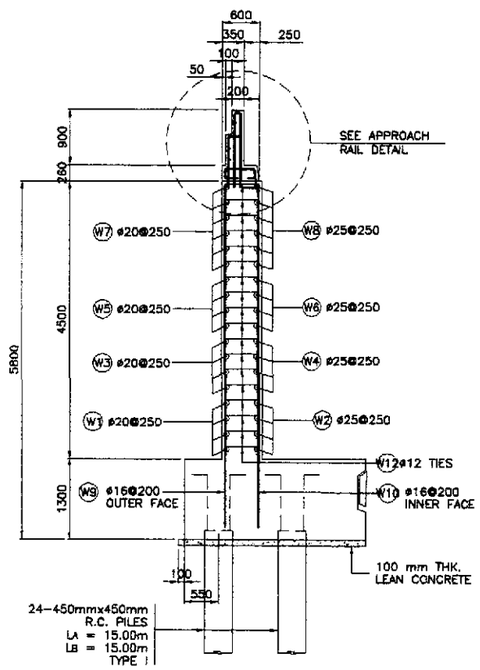

3 SECTION SCALE 1:50

BAR BENDING DIAGRAM

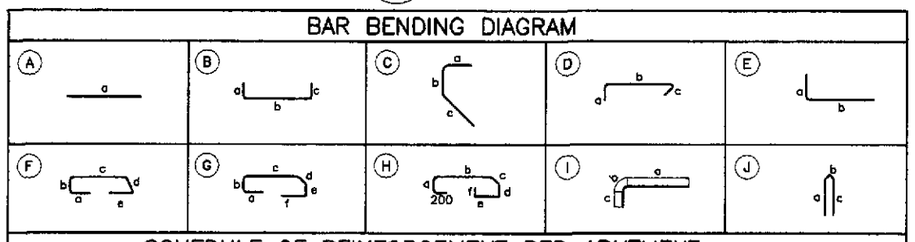

SCHEDULE OF REINFORCEMENT PER ABUTMENT

LOCATION	CONCRETE VOLUME (m^3)	BAR MARK	BAR SIZE	QTY.	SPACING	BAR SHAPE	DIMENSIONS (mm) OUT TO OUT a	b	c	d	e	f	LENGTH EA. BAR (mm)	TOTAL LENGTH (m)	UNIT WT. (kg/m)	WEIGHT (kg)	REBAR RATIO (kg/m^3)
WINGWALL	11.58	W1	20	8	250	B	400	2400	150	–	–	–	2950	23.60	2.466	59	141.93
		W2	25	8	250	B	400	2400	150	–	–	–	2950	23.60	3.854	91	
		W3	20	8	250	B	400	3250	150	–	–	–	3800	30.40	2.466	75	
		W4	25	8	250	B	400	3250	150	–	–	–	3800	30.40	3.854	118	
		W5	20	8	250	B	400	3850	150	–	–	–	4400	35.20	2.466	87	
		W6	25	8	250	B	400	3850	150	–	–	–	4400	35.20	3.854	136	
		W7	20	12	250	B	400	4500	150	–	–	–	5050	60.60	2.466	150	
		W8	25	12	250	B	400	4500	150	–	–	–	5050	60.60	3.854	234	
		W9	16	12	200	E	250	5550	–	–	–	–	5800	69.60	1.579	110	
		W10	16	12	200	E	250	5550	–	–	–	–	5800	69.60	1.579	110	
		W11	16	30	200	E	250	2400	–	–	–	–	2650	79.50	1.579	126	
		W12	16	30	200	E	250	2400	–	–	–	–	2650	79.50	1.579	126	
		W13	16	4	AS SHOWN	C	250	1500	4700	–	–	–	6450	25.80	1.579	41	
		W14	12	258	AS SHOWN	D	170	450	170	–	–	–	790	203.82	0.888	181	
														GRADE 60 TOTAL= 950 kgs.			
														GRADE 40 TOTAL= 694 kgs.			
APPROACH RAILING AND SIDEWALK	5.47	AS1	12	12	AS SHOWN	A	4500	–	–	–	–	–	4500	54.00	0.888	48	89.28
		AS2	12	5	AS SHOWN	A	4500	–	–	–	–	–	4500	22.50	0.888	20	
		AS3	12	2	AS SHOWN	A	4500	–	–	–	–	–	4500	9.00	0.888	8	
		AS4	12	6	AS SHOWN	A	4500	–	–	–	–	–	4500	27.00	0.888	24	
		AS5	16	13	300	G	200	170	480	200	170	200	1420	18.46	1.579	30	
		AS6	16	4	300	F	200	170	480	200	200	–	1250	5.00	1.579	8	
		AS7	16	17	300	H	200	170	1730	200	170	200	2870	48.79	1.579	78	
		AS8	16	17	300	E	200	1770	–	–	–	–	1970	33.49	1.579	53	
		AR1	16	10	300	E	200	900	–	–	–	–	1100	11.00	1.579	18	
		AR2	16	18	300	J	1300	120	1300	–	–	–	2720	48.96	1.579	78	
		AR3	16	2	AS SHOWN	I	2700	236	1300	–	–	–	4236	8.47	1.579	14	
		AR4	16	4	AS SHOWN	I	4400	236	900	–	–	–	5536	22.14	1.579	35	
		AR5	16	8	AS SHOWN	A	4400	–	–	–	–	–	4400	35.20	1.579	56	
		AR6	16	4	AS SHOWN	A	2700	–	–	–	–	–	2700	10.80	1.579	18	
														GRADE 40 TOTAL= 488 kgs.			
TOTAL	17.05	GRADE 60 TOTAL = 950 kgs. GRADE 40 TOTAL = 1,182 kgs.															

JICA
JAPAN INTERNATIONAL COOPERATION AGENCY
KATAHIRA & ENGINEERS INTERNATIONAL
YACHIYO ENGINEERING CO., LTD.

	DATE	SIGNATURE
DESIGNED	9/21/02	J. P. GONZALES
CHECKED	9/24/02	
SUBMITTED	10/14/02	R. ROBLES TEAM LEADER

REPUBLIC OF THE PHILIPPINES
DEPARTMENT OF PUBLIC WORKS AND HIGHWAYS

PJHL - PMO	BUREAU OF DESIGN		OFFICE OF THE SECRETARY	
Submitted By:	Reviewed By:	Recommended By:	Recommended By: (See cover sheet for Signature)	Approved By: (See cover sheet for Signature/Approval)
DANILO C. TRAJANO	ADRIANO M. DOROY	GILBERTO S. REYES	MANUEL M. BONDAN	SIMEON A. DATUMANONG
Project Director	Chief, Bridges Division	Director IV (OIC)	Undersecretary	Secretary

PROJECT AND LOCATION :
THE DETAILED DESIGN STUDY ON UPGRADING INTER-URBAN HIGHWAY SYSTEM ALONG THE PAN-PHILIPPINE HIGHWAY (Plaridel, Cabanatuan and San Jose Bypasses)
PLARIDEL BYPASS - CONTRACT PACKAGE III

SCALE : AS SHOWN
FULL SIZE A1

SHEET CONTENTS :
BRIDGE NO. 9
ABUTMENT A1 & A2
WINGWALL REINFORCEMENT DETAILS
(INITIAL STAGE)

SHEET NO. : B9-06

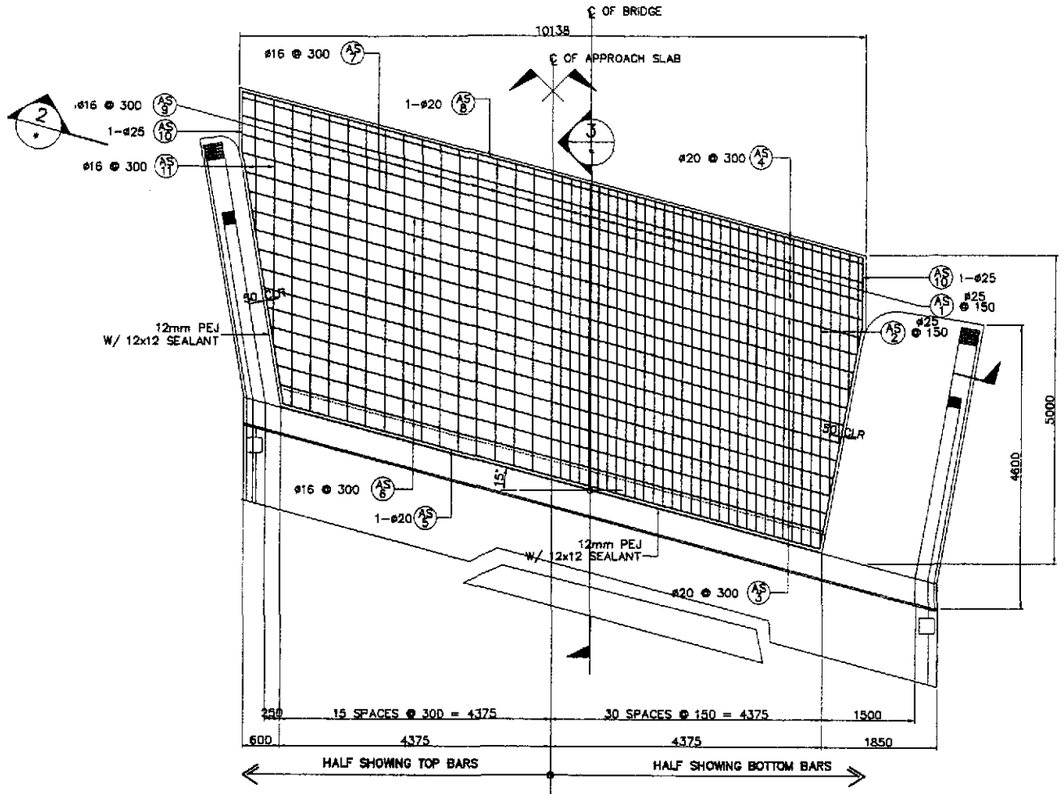

1 - PLAN
SCALE 1:50

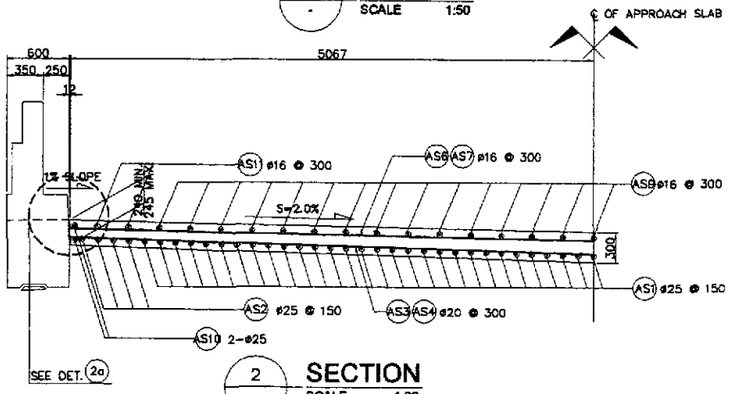

2 - SECTION
SCALE 1:30

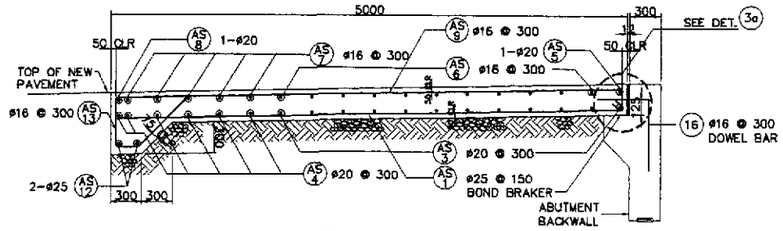

3 - SECTION
SCALE 1:30

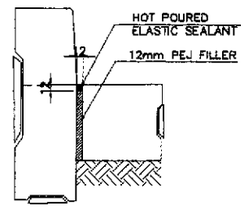

2a - DETAIL
SCALE 1:10

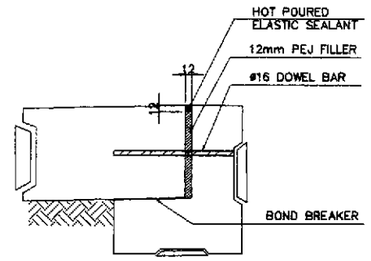

3a - DETAIL
SCALE 1:10

BAR BENDING DIAGRAM

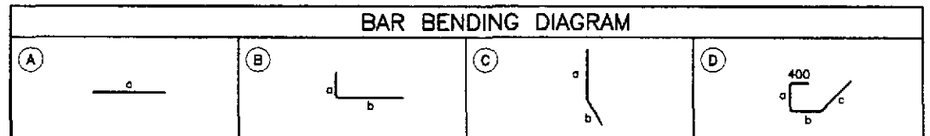

SCHEDULE OF REINFORCEMENT PER APPROACH SLAB

LOCATION	CONCRETE VOLUME (m^3)	BAR MARK	BAR SIZE	QTY.	SPACING	BAR SHAPE	DIMENSIONS (mm) OUT TO OUT a	b	c	d	e	f	LENGTH EA. BAR (mm)	TOTAL LENGTH (m)	UNIT WEIGHT (kg/m)	WEIGHT (kg)	REBAR RATIO (kg/cu.m)
APPROACH SLAB	15.78	AS1	25	60	150	B	4900	200	–	–	–	–	5100	306.00	3.854	1180	163.01
		AS2	25	10	150	B	3150	200	–	–	–	–	3350	33.50	3.854	130	
		AS3	20	13	300	A	10050	–	–	–	–	–	10050	130.65	2.466	323	
		AS4	20	5	300	A	10800	–	–	–	–	–	10800	54.00	2.466	134	
		AS5	20	1	AS SHOWN	A	9400	–	–	–	–	–	9400	9.40	2.466	24	
		AS6	16	12	300	A	10100	–	–	–	–	–	10100	121.20	1.579	192	
		AS7	16	4	300	A	10800	–	–	–	–	–	10800	43.20	1.579	69	
		AS8	20	1	AS SHOWN	A	10800	–	–	–	–	–	10800	10.80	2.466	27	
		AS9	16	30	300	B	4900	200	–	–	–	–	5100	153.00	1.579	242	
		AS10	25	4	AS SHOWN	C	1000	4100	–	–	–	–	5100	20.40	3.854	79	
		AS11	16	4	300	D	3050	200	–	–	–	–	3250	13.00	1.579	21	
		AS12	25	2	AS SHOWN	A	10800	–	–	–	–	–	10800	21.60	3.854	84	
		AS13	16	35	300	D	400	500	200	700	–	–	1800	63.00	1.579	100	
TOTAL	15.78	GRADE 40 TOTAL = 624 kgs. GRADE 60 TOTAL = 1981 kgs.															

JICA
JAPAN INTERNATIONAL COOPERATION AGENCY
KATAHIRA & ENGINEERS INTERNATIONAL
YACHIYO ENGINEERING CO., LTD.

	DATE	SIGNATURE
DESIGNED	9/21/02	E.N. SALLAN
CHECKED	9/30/02	
SUBMITTED	10/4/02	TEAM LEADER

REPUBLIC OF THE PHILIPPINES
DEPARTMENT OF PUBLIC WORKS AND HIGHWAYS

PJHL – PMO	BUREAU OF DESIGN		OFFICE OF THE SECRETARY	
Submitted By:	Reviewed By:	Recommended By:	Recommended By: (See cover sheet for Signature)	Approved By: (See cover sheet for Signature/Approval)
DANILO C. TRAJANO Project Director	ADRIANO M. DOROY Chief, Bridges Division	GILBERTO S. REYES Director IV (OIC)	MANUEL M. BONOAN Undersecretary	SIMEON A. DATUMANONG Secretary

PROJECT AND LOCATION :
THE DETAILED DESIGN STUDY ON UPGRADING INTER-URBAN HIGHWAY SYSTEM ALONG THE PAN-PHILIPPINE HIGHWAY (Plaridel, Cabanatuan and San Jose Bypasses)
PLARIDEL BYPASS - CONTRACT PACKAGE III

SCALE : AS SHOWN
FULL SIZE A1

SHEET CONTENTS :
BRIDGE NO. 9
APPROACH SLAB PLAN, SECTIONS AND DETAILS (INITIAL STAGE)

SHEET NO. : B9-07

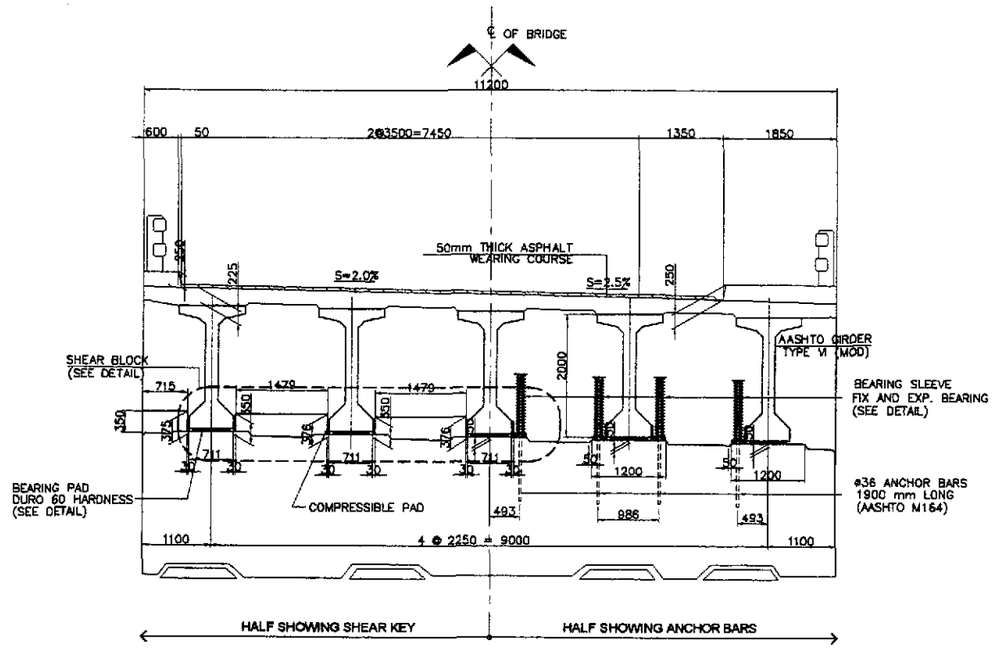

1 SECTION AT ABUTMENT SEAT
SCALE 1:50

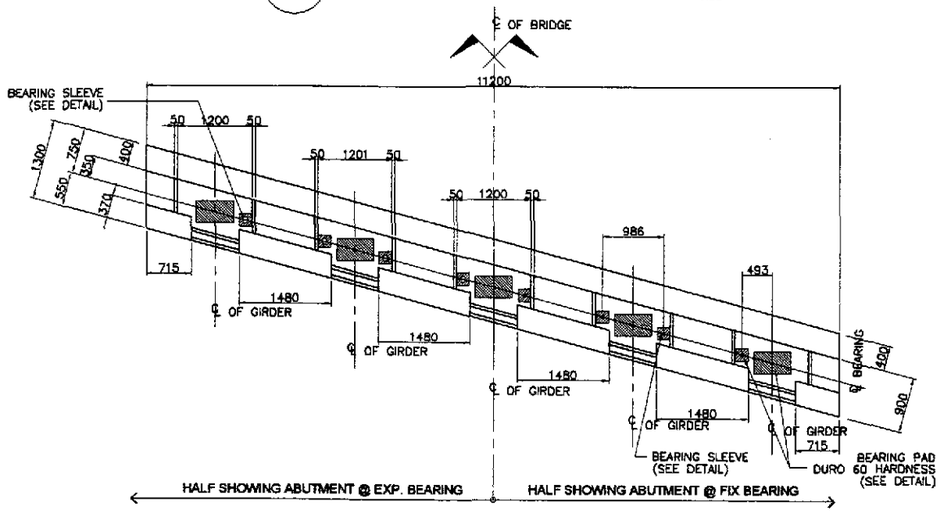

2 PLAN AT ABUTMENT SEAT
SCALE 1:50

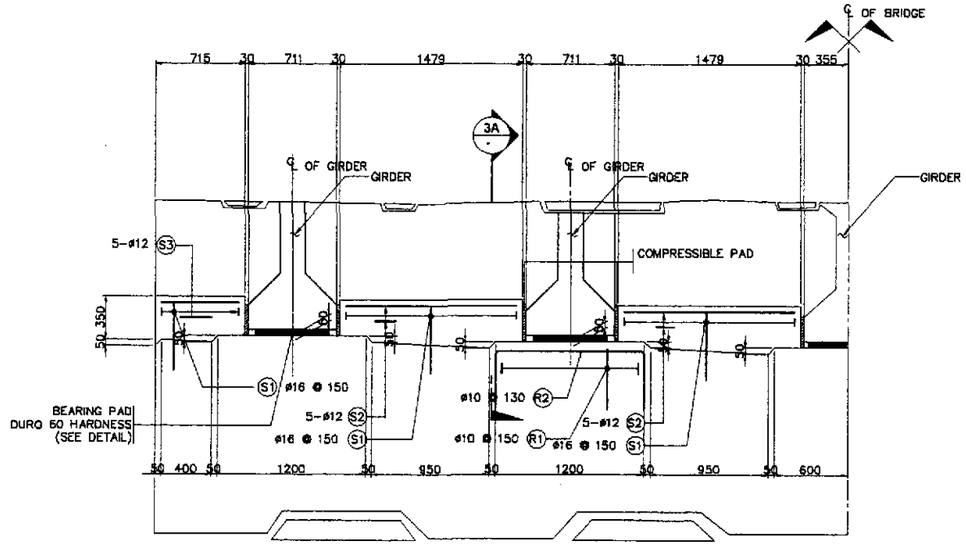

3 SHEAR BLOCK DETAIL
SCALE 1:25

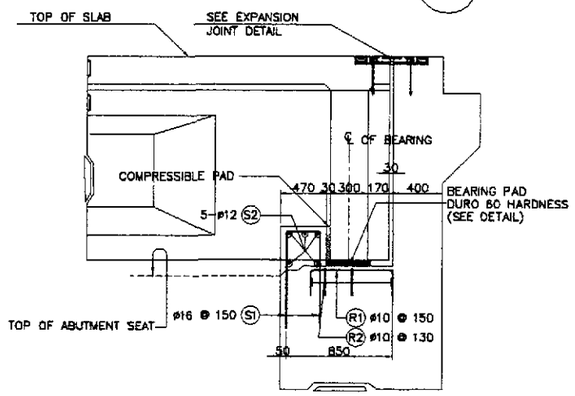

3A SECTION
SCALE 1:25

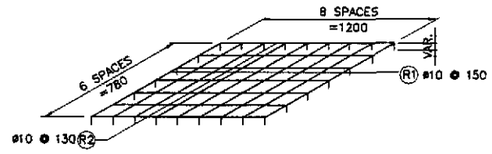

4 RISER REINFORCEMENT
NOT TO SCALE

BAR BENDING DIAGRAM

SCHEDULE OF REINFORCEMENT

LOCATION	CONCRETE VOLUME (m^3)	BAR MARK	BAR SIZE	QTY.	SPACING	BAR SHAPE	DIMENSION(mm) OUT TO OUT a	b	c	d	e	LENGTH EACH BAR (m)	TOTAL LENGTH (m)	UNIT WEIGHT (kg/m)	WEIGHT (kg)	REBAR RATIO (kg/m^3)
SHEAR KEY & RISER	1.52	S1	16	50	150	B	560	290	560			1410	70.50	1.579	112	143.77
		S2	12	20	AS SHOWN	A	1450					1450	29.00	0.888	26	
		S3	12	10	AS SHOWN	A	660					660	6.60	0.888	6	
		R1	10	45	150	B	500	810	500			1810	81.45	0.616	51	
		R2	10	35	130	B	500	1250	500			2250	78.75	0.616	49	
TOTAL	1.52	GRADE 40 TOTAL = 244 kgs.														

THE REINFORCEMENT SHOWN ON THIS TABLE IS FOR REFERENCE ONLY. THE CONTRACTOR SHOULD CHECKED AND VERIFY ALL DIMENSIONS, SIZES AND QUANTITIES OF REINFORCEMENT.

JICA
JAPAN INTERNATIONAL COOPERATION AGENCY
KEI KATAHIRA & ENGINEERS INTERNATIONAL
YEC YACHIYO ENGINEERING CO., LTD.

	DATE	SIGNATURE
DESIGNED	9/21/02	E. SALLAN
CHECKED	9/23/02	
SUBMITTED	10/14/02	TEAM LEADER

REPUBLIC OF THE PHILIPPINES
DEPARTMENT OF PUBLIC WORKS AND HIGHWAYS

FJHL - PMO	BUREAU OF DESIGN		OFFICE OF THE SECRETARY	
Submitted By:	Reviewed By:	Recommended By:	Recommended By: (See cover sheet for Signature)	Approved By: (See cover sheet for Signature/Approval)
DANILO C. TRAJANO	ADRIANO M. DOROY	GILBERTO S. REYES	MANUEL M. BONOAN	SIMEON A. DATUMANONG
Project Director	Chief, Bridges Division	Director IV (OIC)	Undersecretary	Secretary

PROJECT AND LOCATION :	SCALE :	SHEET CONTENTS :	SHEET NO. :
THE DETAILED DESIGN STUDY ON UPGRADING INTER-URBAN HIGHWAY SYSTEM ALONG THE PAN-PHILIPPINE HIGHWAY (Plaridel, Cabanatuan and San Jose Bypasses)	AS SHOWN	BRIDGE NO. 9 SHEAR KEY AND RISER DETAILS (INITIAL STAGE)	B9-08
PLARIDEL BYPASS - CONTRACT PACKAGE III	FULL SIZE A1		

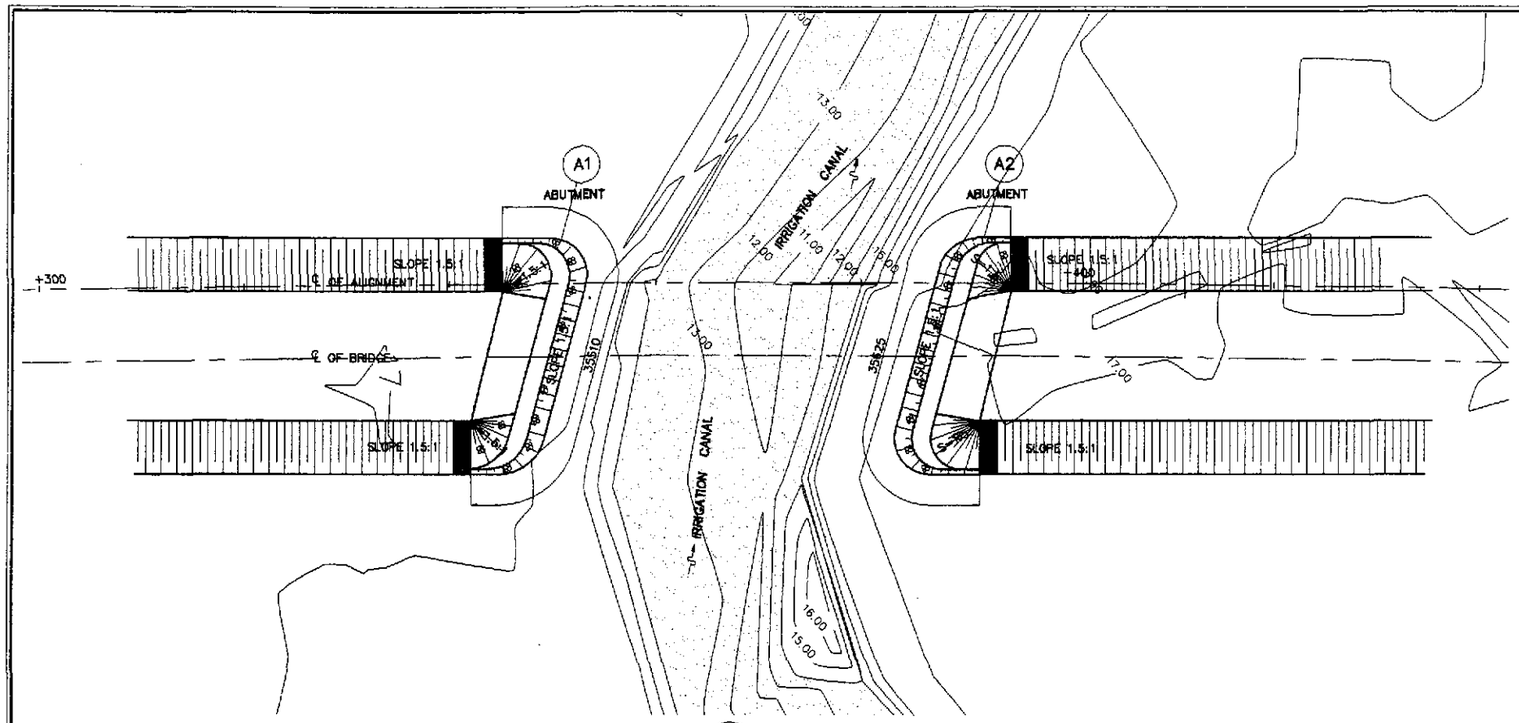

1A PLAN
SCALE 1:300

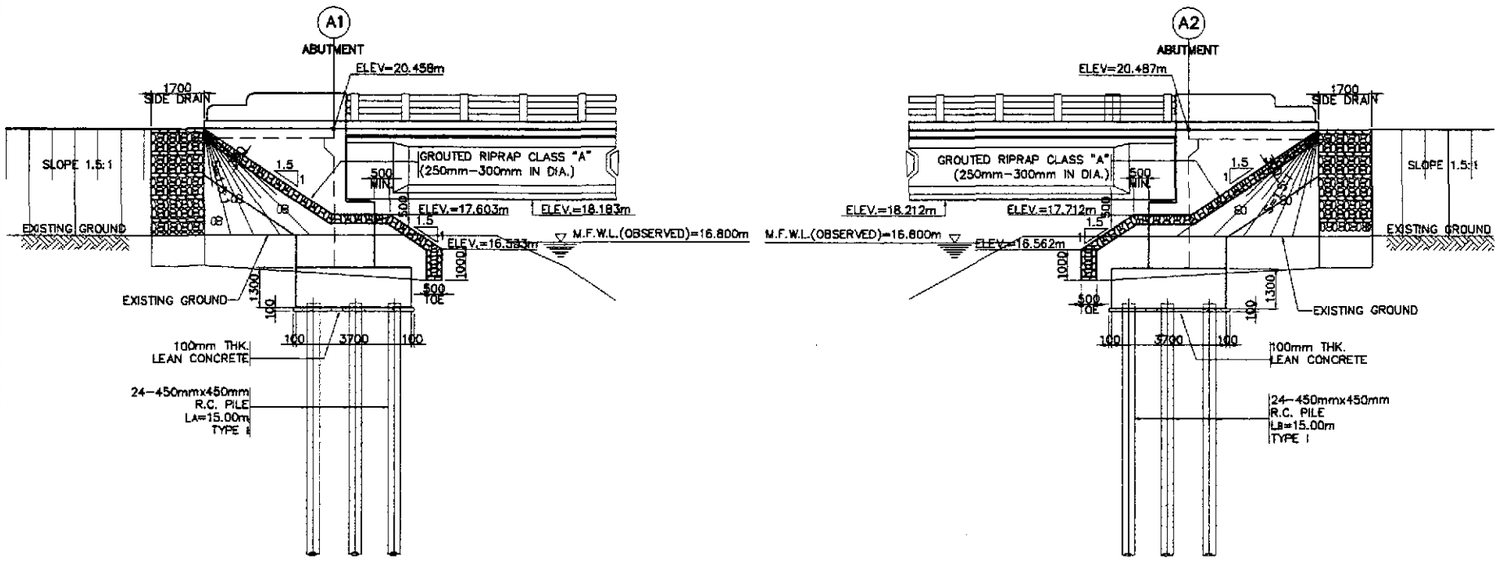

1B ELEVATION
SCALE 1:100

1 ABUTMENT SLOPE PROTECTION
SCALE AS SHOWN

GENERAL NOTES:

1. GROUTED RIPRAP (250mm-300mmDIA.) SHALL BE USED FOR THE FACING AND SHALL BE CAREFULLY HANDLAID WITH THE LONGEST DIMENSIONS PERPENDICULAR TO THE SLOPE AND FIRMLY BEDDED INTO THE SLOPE AND ADJACENT TO THE ADJOINING BOULDERS SPACED BETWEEN THE BOULDERS. THE SPACE BETWEEN THE BOULDERS SHALL BE COMPLETELY FILLED WITH MORTAR. THE OUTSIDE SURFACE OF THE BOULDERS SHALL BE LEFT EXPOSED AND THE SURFACE OF THE MORTAR SHALL BE SWEPT WITH A STIFF BROOM.
2. GEOTEXTILE
   THE FOLLOWING SPECIFICATIONS ARE REQUIRED:
   1. POLYESTER OR POLYPROPELINE - 100%
   2. MECHANICALLY BONDED/HEAT BONDED
   3. NON-WOVEN
   4. EFFECTIVE OPENING SIZE - 110 MICRONS (MAX.)
   5. THICKNESS UNDER PRESSURE - 0.80mm (MIN.)
   6. WEIGHT - 200g/sq. m. (MIN.)
   7. CBR PUNCTURE STRENGTH - 400N (MIN.)
   8. MULTI-DIRECTIONAL TENSILE STRENGTH - 13KN/m
3. GRAVEL FILTER SHALL BE COARSE AGGREGATES MATERIALS WHICH SATISFY THE REQUIREMENTS FOR ITEM 405, STRUCTURAL CONCRETE, GRADING B OF TABLE 405.1 AS REVISED.
4. NO CONCRETING UNDER WATER SHALL BE PERMITTED.
5. PROVIDE 1.0 m BERM WHEN HEIGHT (H) IS > 4.0 m.

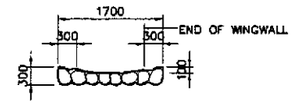

2B SECTION
SCALE 1:50

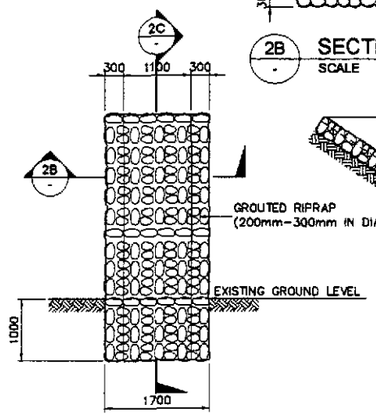

2A ELEVATION
SCALE 1:50

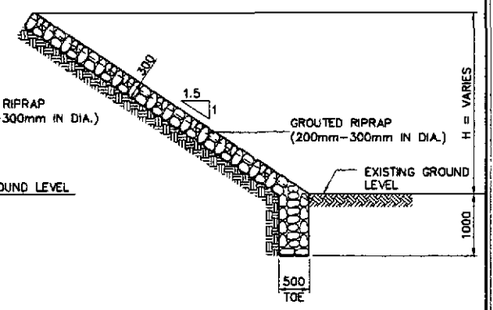

2C SECTION
SCALE 1:50

2 TYPICAL SIDE DRAIN DETAIL
SCALE AS SHOWN

VELOCITY (m/sec)	ROCK SIZE (mm)	
	VERY TURBULENT FLOW	SMOOTH FLOW
1.00	40	-
1.50	135	-
2.00	170	-
2.50	255	137
3.00	370	197
3.50	515	270
4.00	690	350
4.50	825	425
5.00	>900	590

PER ABUTMENT

LOCATION	SIZES	QUANTITY	
		ABUT. A1	ABUT. A2
SIDE DRAIN	200mm-300mm IN DIA.	8.08 cu. m.	8.08 cu. m.
GROUTED RIPRAP	250mm-300mm IN DIA.	45.67 cu. m.	45.67 cu. m.

JICA
JAPAN INTERNATIONAL COOPERATION AGENCY
KEI KATAHIRA & ENGINEERS INTERNATIONAL
YEO YACHIYO ENGINEERING CO., LTD.

	DATE	SIGNATURE
DESIGNED	9/21/01	R. P. GONZALES
CHECKED	9/28/01	
SUBMITTED	10/15/01	TEAM LEADER

REPUBLIC OF THE PHILIPPINES
DEPARTMENT OF PUBLIC WORKS AND HIGHWAYS

PJHL - PMO	BUREAU OF DESIGN		OFFICE OF THE SECRETARY	
Submitted By:	Reviewed By:	Recommended By:	Recommended By: (See cover sheet for Signature)	Approved By: (See cover sheet for Signature/Approved)
DANILO C. TRAJANO	PERFECTO L. ZAPLAN JR.	GILBERTO S. REYES	MANUEL M. BONDAN	SIMEON A. DATUMANONG
Project Director	Chief, Hydraulics Division (OIC)	Director IV (OIC)	Undersecretary	Secretary

PROJECT AND LOCATION :	SCALE :	SHEET CONTENTS :	SHEET NO. :
THE DETAILED DESIGN STUDY ON UPGRADING INTER-URBAN HIGHWAY SYSTEM ALONG THE PAN-PHILIPPINE HIGHWAY (Plaridel, Cabanatuan and San Jose Bypasses)	AS SHOWN	BRIDGE NO. 9 ABUTMENT PROTECTION AND SIDE DRAIN DETAILS (INITIAL STAGE)	B9-09
PLARIDEL BYPASS - CONTRACT PACKAGE III	FULL SIZE A1		

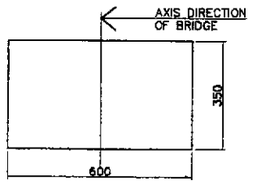

1A PLAN
SCALE 1:10

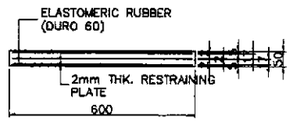

1B ELEVATION
SCALE 1:10

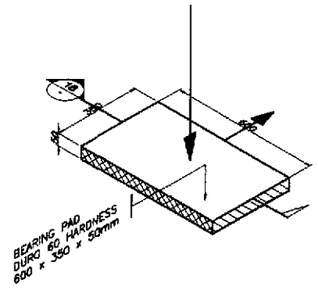

1C ISOMETRIC VIEW
N T S

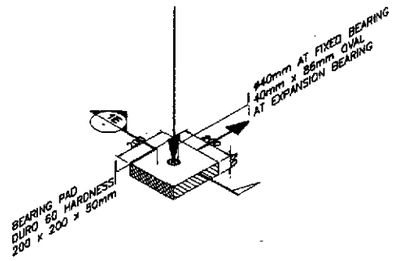

1F ISOMETRIC VIEW
N T S

1 BEARING PAD DETAIL
SCALE AS SHOWN

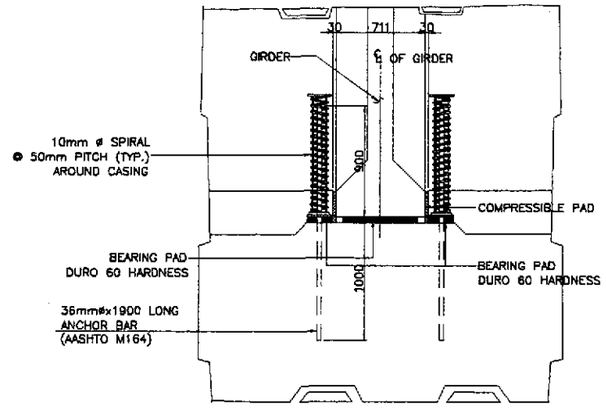

3A ANCHOR BAR
SCALE 1:25

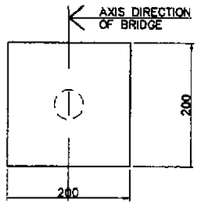

1D PLAN
SCALE 1:5

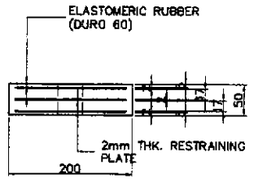

1E ELEVATION
SCALE 1:5

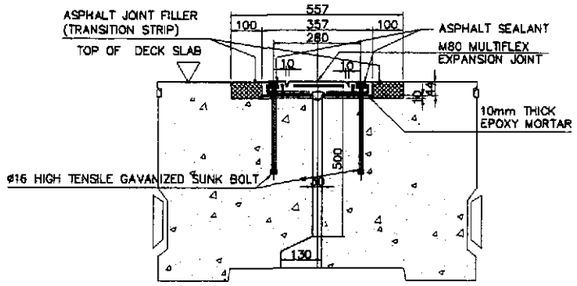

2B SECTION (TYPE A)
SCALE 1:10

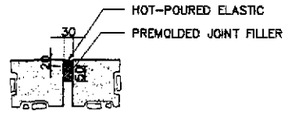

2C SECTION (TYPE B)
SCALE 1:10

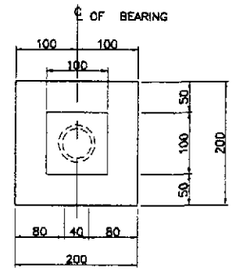

PLAN

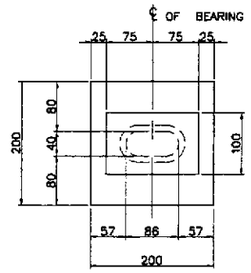

PLAN

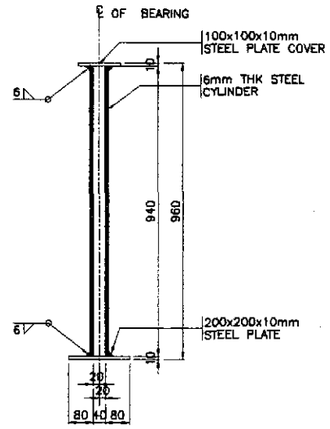

ELEVATION

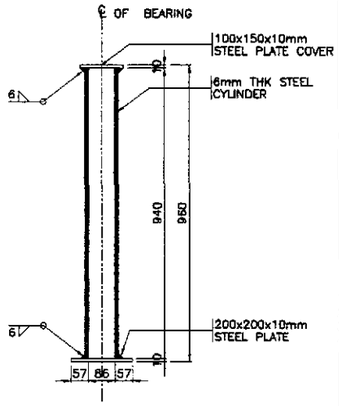

ELEVATION

3B FIXED BEARING
SCALE 1:10

3C EXPANSION BEARING
SCALE 1:10

A.) QUALITY TESTING OF RUBBER COMPOUND

PROPERTIES	SPECIFICATION
HARDNESS (SHORE A)	50 ± 5
TENSILE STRENGTH (MPa)	13 MIN
ELONGATION AT BREAK (%)	400 MIN
COMPRESSION SET (AFTER 22h AT 70°C)	20% MAX
OZONE RESISTANCE (AFTER 72h AT 40°C, 20% STRAIN 100 pphm	NO CRACK
OIL RESISTANCE IN ASTM NO. 3 OIL (168h AT 25°C VOLUME CHANGE)	15% MAX

B.) DIMENSION CHECK ON METAL PLATES

DIMENSION	SPECIFICATION
LENGTH	± 1
WIDTH	0 TO −1.5 MIN
THICKNESS	±0.5 MIN

C.) QUALITY CHECK

PROPERTY	SPECIFICATION
DIMENSION	ACCORDING TO PRODUCT DRAWING
SURFACE APPEARANCE	NO VISIBLE CRACK
RUBBER COVER HARDNESS (SHORE A)	50 ± 5

INSTALLATION MATERIALS

1. EPOXY BEDDING
2. EPOXY NOSING
3. BOLT/NUTS
4. SEALANT

LOCATION	EXPANSION JOINT TYPE	MOVEMENT (mm)	LENGTH (m)
BRIDGE 9	MULTIFLEX 80	30	24

LOCATION	ELASTOMERIC BEARING PAD SIZE	QUANTITY
BRIDGE 9	600x350x50	10 PCS.
	200x200x50	16 PCS.

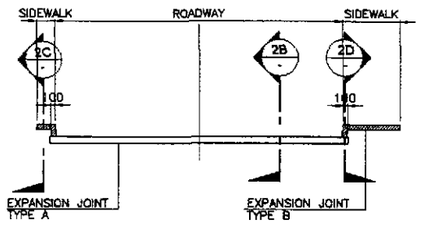

2A ELEVATION
N T S

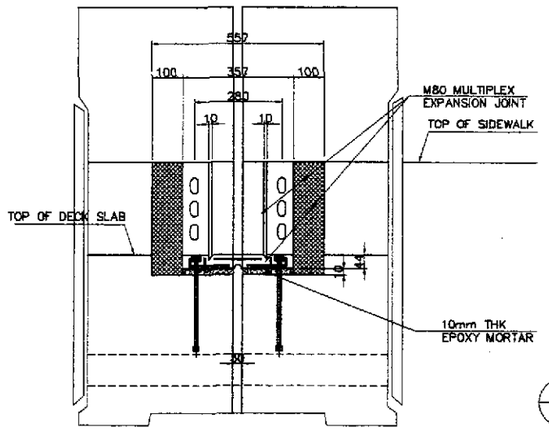

2 EXPANSION JOINT DETAIL
SCALE AS SHOWN

2D SECTION (TYPE A)
SCALE 1:10

3 BEARING SLEEVE AND ANCHOR BAR DETAIL
SCALE AS SHOWN

JICA
JAPAN INTERNATIONAL COOPERATION AGENCY
KATAHIRA & ENGINEERS INTERNATIONAL
YACHIYO ENGINEERING CO., LTD.

	DATE	SIGNATURE
DESIGNED	9/21/02	N. SALLAN
CHECKED	9/23/02	
SUBMITTED	10/4/02	TEAM LEADER

REPUBLIC OF THE PHILIPPINES
DEPARTMENT OF PUBLIC WORKS AND HIGHWAYS

FJHL - PMO	BUREAU OF DESIGN		OFFICE OF THE SECRETARY	
Submitted By:	Reviewed By:	Recommended By:	Recommended By: (See cover sheet for Signature)	Approved By: (See cover sheet for Signature/Approval)
DANILO C. TRAJANO	ADRIANO M. DOROY	GILBERTO S. REYES	MANUEL M. BONOAN	SIMEON A. DATUMANONG
Project Director	Chief, Bridges Division	Director IV (OIC)	Undersecretary	Secretary

PROJECT AND LOCATION :
THE DETAILED DESIGN STUDY ON UPGRADING INTER-URBAN HIGHWAY SYSTEM ALONG THE PAN-PHILIPPINE HIGHWAY (Plaridel, Cabanatuan and San Jose Bypasses)
PLARIDEL BYPASS - CONTRACT PACKAGE III

SCALE : AS SHOWN
FULL SIZE A1

SHEET CONTENTS :
BRIDGE NO. 9
TYP. BEARING PAD, EXPANSION JOINT, BEARING SLEEVE & ANCHOR BAR DET. (INITIAL STAGE)

SHEET NO. : BS-01

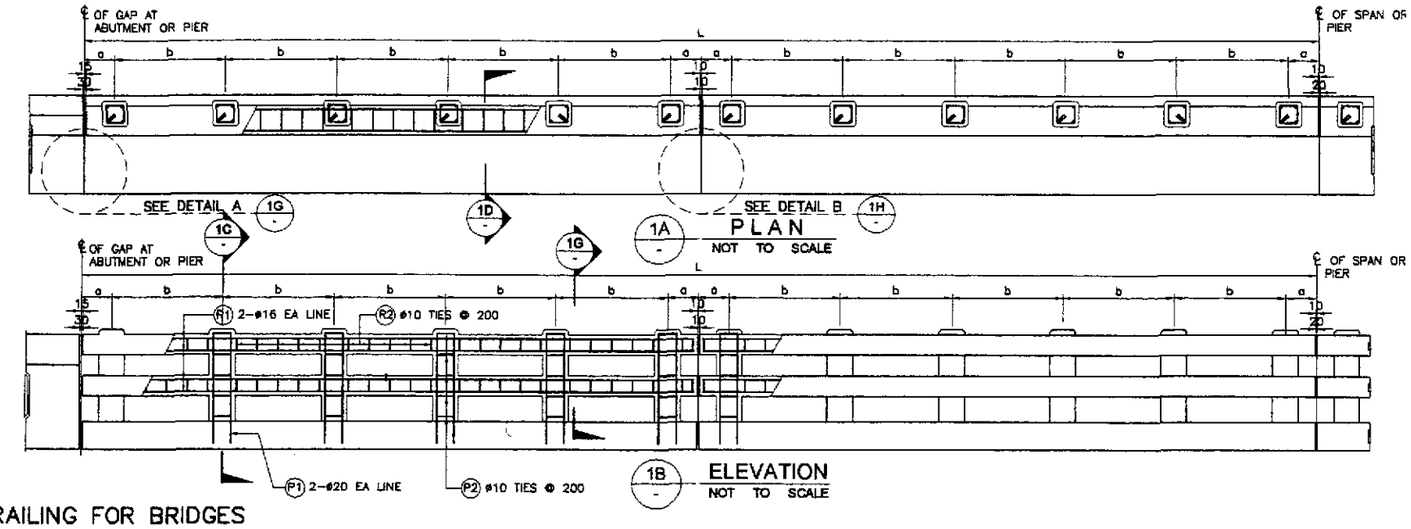

1A PLAN
NOT TO SCALE

1B ELEVATION
NOT TO SCALE

RAILING FOR BRIDGES

BRIDGE NO.	SPAN LENGTH (m)	NO. OF EXP. JT. INSIDE SPAN	NO. OF POST W/IN EXP. JT.	NO. OF RAIL POST PER SPAN	L (mm)	a (mm)	b (mm)
BR.9	40.00	3	6	48	20015	250	1902

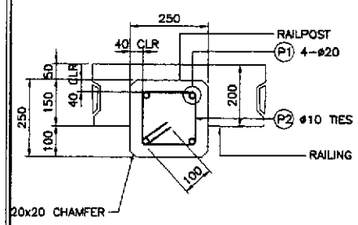

1F DETAIL
SCALE 1:10

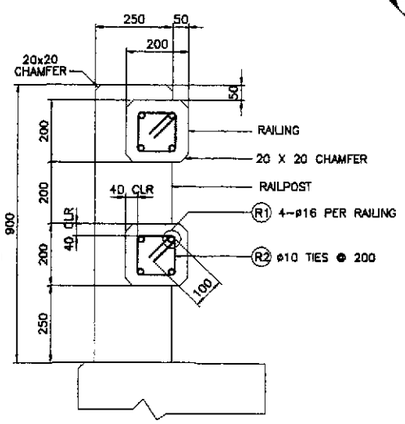

1G SECTION
SCALE 1:10

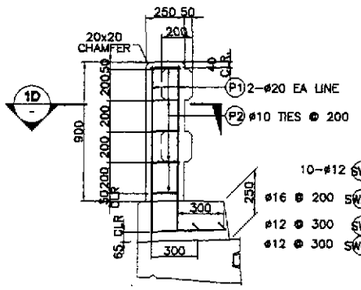

1C SECTION
SCALE 1:20

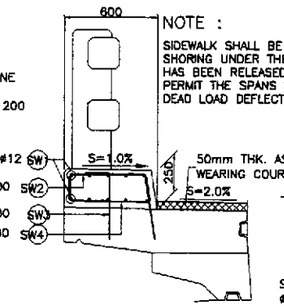

1D SIDEWALK DETAIL
SCALE 1:20

NOTE :
SIDEWALK SHALL BE PLACED AFTER THE SHORING UNDER THE SUPERSTRUCTURE HAS BEEN RELEASED SUFFICIENTLY TO PERMIT THE SPANS TO ATTAIN FULL DEAD LOAD DEFLECTION.

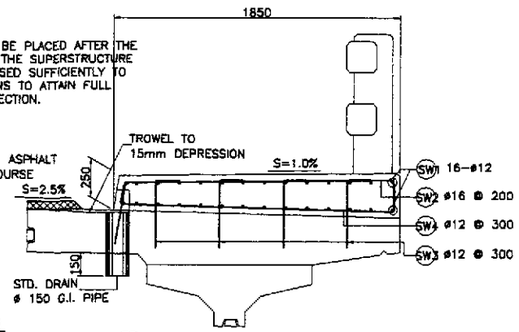

1E SIDEWALK DETAIL
SCALE 1:20

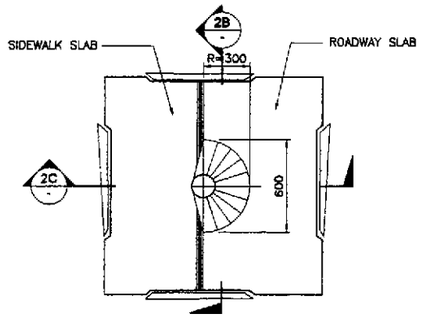

2A PLAN

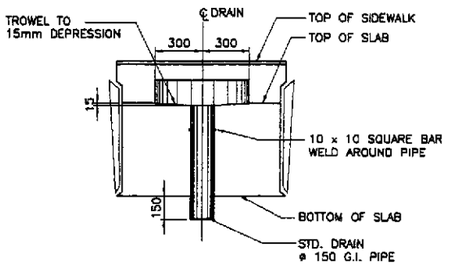

2B SECTION

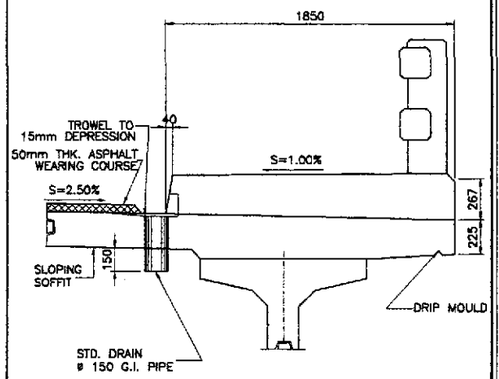

2C SECTION
SCALE 1:20

2 TYPICAL DRAIN DETAILS
SCALE 1:20

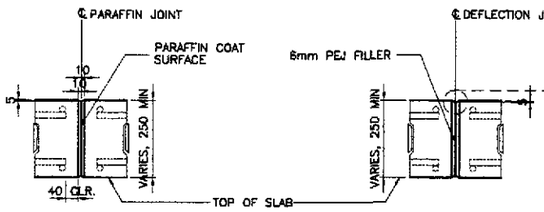

1H DETAIL A
PARAFFIN JOINT
NOT TO SCALE

1I DETAIL B
DEFLECTION JOINT
NOT TO SCALE

NOTE :
FOR LOCATION OF JOINTS SEE GENERAL PLAN OF BRIDGE.

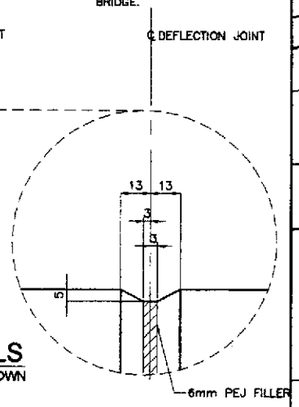

1 TYPICAL RAILING AND SIDEWALK DETAILS
SCALE AS SHOWN

BAR BENDING DIAGRAM

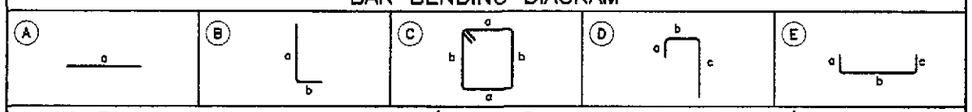

SCHEDULE OF REINFORCEMENT (POST, RAILING AND SIDEWALK)

LOCATION	CONCRETE VOLUME (m3)	BAR MARK	BAR SIZE	QTY.	SPACING	BAR SHAPE	DIMENSIONS (mm) OUT TO OUT a	b	c	d	e	LENGTH EA. BAR (mm)	TOTAL LENGTH (m)	UNIT WEIGHT (kg/m)	WEIGHT (kg)	REBAR RATIO (kg/m)	REMARKS
POST	2.70	P1	20	192	AS SHOWN	B	1045	450	–	–	–	1495	287.04	2.466	708		
		P2	10	240	200	C	170	170	100			880	211.20	0.616	131		
		GRADE 40 TOTAL = 131 kgs. GRADE 60 TOTAL = 708 kgs.														310.74	
RAILING	6.40	R1	16	16	AS SHOWN	A	40000	–	–	–	–	40000	640.00	1.579	1011		
		R2	10	720	200	C	120	120	100	–	–	680	489.00	0.616	302		b is ave.
		GRADE 40 TOTAL = 1,313 kgs.														205.16	
SIDEWALK	24.50	SW1	12	38	AS SHOWN	A	40000	–	–	–	–	40000	1520.00	0.888	1350		
		SW2	16	200	200	D	170	1730	400	–	–	2300	460.00	1.579	727		
		SW2a	16	200	200	D	170	480	400	–	–	1050	210.00	1.579	332		
		SW3	12	670	300	B	400	250	–	–	–	650	435.50	0.888	387		
		SW4	12	134	300	E	170	1750	170	–	–	2090	282.74	0.888	252		
		SW4a	12	134	300	E	170	520	170	–	–	860	115.24	0.888	103		
		GRADE 40 TOTAL = 3,151 kgs.														128.61	
TOTAL	33.60	GRADE 40 GRAND TOTAL = 4,595 kgs. GRADE 60 GRAND TOTAL = 708 kgs.															

JICA
JAPAN INTERNATIONAL COOPERATION AGENCY
KATAHIRA & ENGINEERS INTERNATIONAL
YACHIYO ENGINEERING CO., LTD.

	DATE	SIGNATURE
DESIGNED	9/24/02	E. L. SALLAN
CHECKED	9/23/02	M. SOLIDUM JR.
SUBMITTED	10/14/02	TEAM LEADER

REPUBLIC OF THE PHILIPPINES
DEPARTMENT OF PUBLIC WORKS AND HIGHWAYS

PJHL - PWO	BUREAU OF DESIGN		OFFICE OF THE SECRETARY	
Submitted By:	Reviewed By:	Recommended By:	Recommended By: (See cover sheet for Signature)	Approved By: (See cover sheet for Signature/Approval)
DANILO C. TRAJANO	ADRIANO M. DOROY	GILBERTO S. REYES	MANUEL M. BONOAN	SIMEON A. DATUMANONG
Project Director	Chief, Bridges Division	Director IV (GIC)	Undersecretary	Secretary

PROJECT AND LOCATION :
THE DETAILED DESIGN STUDY ON UPGRADING INTER-URBAN HIGHWAY SYSTEM ALONG THE PAN-PHILIPPINE HIGHWAY (Plaridel, Cabanatuan and San Jose Bypasses)
PLARIDEL BYPASS - CONTRACT PACKAGE III

SCALE : AS SHOWN
FULL SIZE A1

SHEET CONTENTS :
BRIDGE NO. 9
TYPICAL SIDEWALK, RAILING AND DRAIN DETAILS (INITIAL STAGE)

SHEET NO. : BS-02

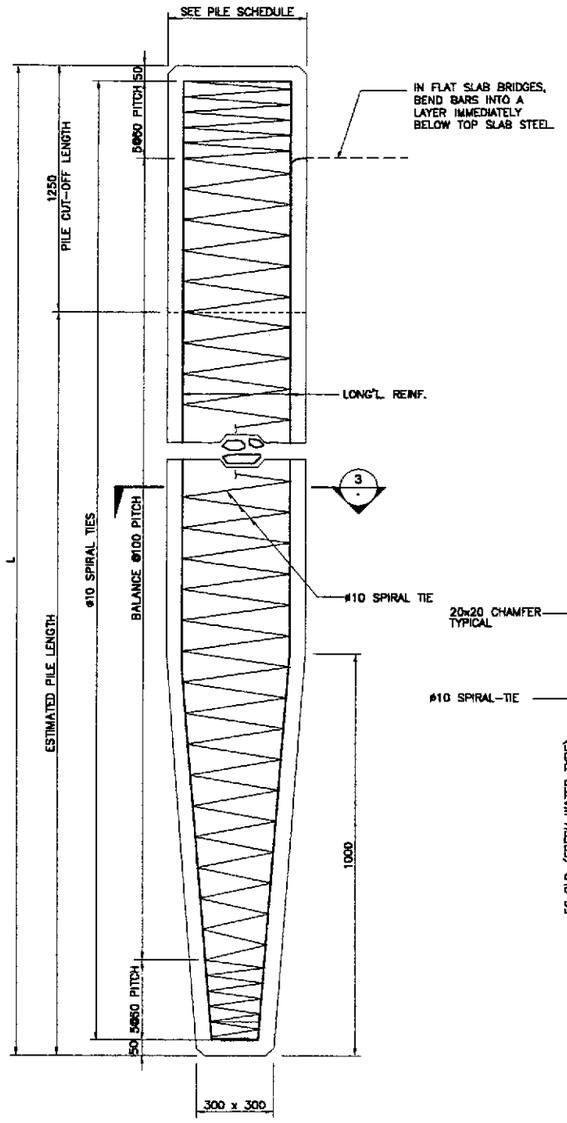

1 - PILE ELEVATION
NOT TO SCALE

PILE SCHEDULE				
TYPE	SIZE (mm)	LONGITUDINAL REINF.		ALLOWABLE BEARING CAPACITY (kN)
		QTY.	BAR SIZE	
I	450 x 450	8	28	680
II	450 x 450	8	32	680
III	400 x 400	8	28	490

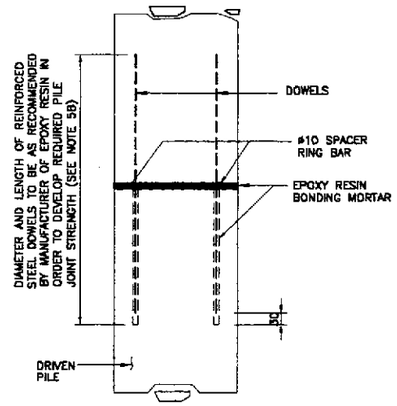

2A - ELEVATION
N T S

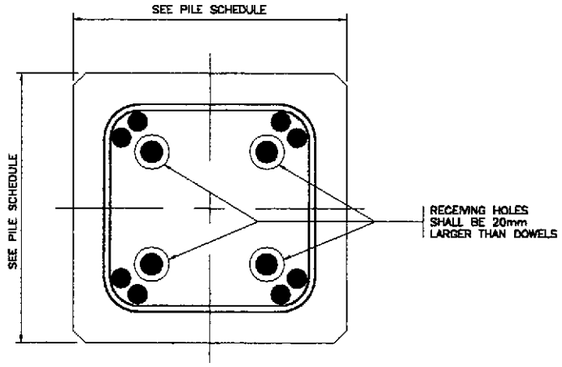

2B - SECTION
N T S

2 - PILE SPLICE DETAIL
NOT TO SCALE

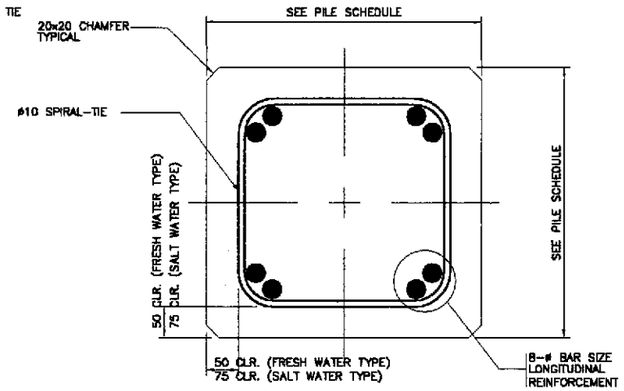

3 - SECTION
NOT TO SCALE

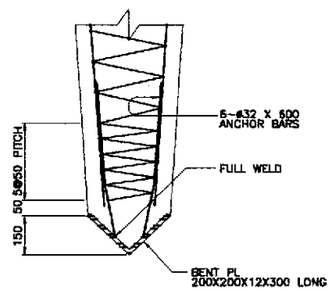

4 - PILE TIP FOR HARD DRIVING
NOT TO SCALE

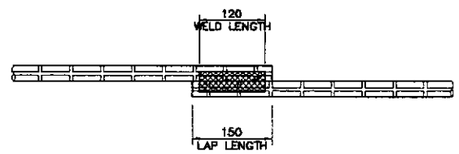

5A - ELEVATION
N T S

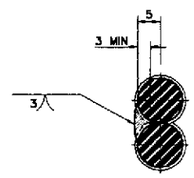

5B - SECTION
N T S

5 - WELDED SPIRAL TIE SPLICE DETAIL
NOT TO SCALE

NOTES

1. CONCRETE :
   CONCRETE SHALL CONFORM TO THE REQUIREMENTS OF CLASS AA CONCRETE. WITH 28 MPa CYLINDER STRENGTH AND 19.0mm MAXIMUM AGGREGATE SIZE.
2. REINFORCENMENT :
   A. ALL REINFORCING STEEL SHALL BE DEFORMED BARS COMFORMING TO ASSHTO M31 (ASTM A615) GRADE 40 AND 60.
   B. SPLICES OF ADJACENT LONGITUDINAL STEEL SHALL BE STAGGERRED 100 BAR DIAMETERS APART. LENGTH OF SPLICES SHALL BE 1000mm FOR #25 AND 1300mm FOR #28 AND 1700mm FOR #32.
   C. SPIRAL-TIES SHALL BE WELDED AT SPLICES.
3. DRIVING :
   A. PILE HEADS SHALL BE PROTECTED FROM DIRECT IMPACT OF THE HAMMER BY CUSHION BLOCKS CONSISTING OF SEVERAL BLOCKS OF WOOD OR OF OTHER APPROVED MATERIALS.
   B. PILES SHALL BE DRIVEN TO A DEPTH THAT WILL PRODUCE THE REQUIRED ALLOWABLE BEARING CAPACITY.
4. PILE FOUNDATION DESIGN:
   A. IN PILE-BENT PIERS, PILE LENGTHS SHALL BE DETERMINED BY THE ENGINEER/CONSULTANT BASED ON THE ALLOWABLE PILE BEARING CAPACITY SPECIFIED BELOW.
   B. IN COLUMN-BENT PIERS, THE NUMBER, LOCATION AND LENGTH OF PILES SHALL BE DETERMINED BY THE ENGINEER/CONSULTANT BASED ON THE LOADING INFORMATION GIVEN IN THE PIER DETAILS.
5. PILE SPLICE :
   A. PILES MAY BE SPLICED ONLY IF STRICTLY NECESSARY AND APPROVED BY THE ENGINEER/CONSULTANT. PILE SPLICES SHALL BE LOCATED AT LEAST 10m BELOW THE EXISTING GROUND LEVEL.
   B. PILE SPLICE SHALL DEVELOP 100% AXIAL, AND 50% BENDING OF THE CAPACITY OF THE PILE SECTION WHERE THE SPLICE IS LOCATED.
6. ALLOWABLE PILE BEARING CAPACITY : (SEE PILE SCHEDULE)
7. MINIMUM HAMMER ENERGY RATING = 55 kN-m
8. BASIS FOR COMPUTING ALLOWABLE PILE BEARING CAPACITY:

$$P_{all} = \left(\frac{167\ e_h\ E_h}{S + 2.54}\right)\left(\frac{W_r + 0.16\ W_p}{W_r + W_p}\right)$$

WHERE:

P_{all} = ALLOWABLE PILE BEARING CAPACITY (kN)
e_h = HAMMER EFFICIENCY
E_h = HAMMER ENERGY RATING (kN-m)
W_r = WEIGHT OF RAM (kN)
W_p = WEIGHT OF PILE AND OTHER DRIVEN WEIGHTS (kN)
S = AVERAGE PENETRATION PER BLOW FOR THE LAST 150mm OF DRIVING (mm)

9. TEST PILES
   TEST PILES SHALL BE DRIVEN WITH THE SAME HAMMER USED FOR DRIVING REGULAR PILES AND MAY BE PART OF FOUNDATION IF APPROVED BY THE ENGINEER/CONSULTANT.
10. PICK-UP POINTS :
   PICK-UP POINTS SHALL BE MARKED ON ALL PILES AND ALL LIFTING SHALL BE DONE AT THESE POINTS.

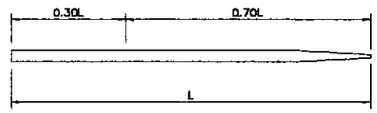

1-POINT PICK-UP

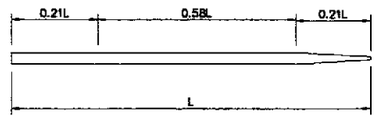

2-POINT PICK-UP

THE USE OF SPECIAL EMBEDDED OR ATTACHED LIFTING DEVICES SHALL BE SUBJECT TO THE APPROVAL OF THE ENGINEER/CONSULTANT.

JICA
JAPAN INTERNATIONAL COOPERATION AGENCY
KEI KATAHIRA & ENGINEERS INTERNATIONAL
YEC YACHIYO ENGINEERING CO., LTD.

	DATE	SIGNATURE
DESIGNED	9/21/02	C. N. SALLAN
CHECKED	9/23/02	M. MIYAMOTO
SUBMITTED	10/14/02	K. YAMADA TEAM LEADER

REPUBLIC OF THE PHILIPPINES
DEPARTMENT OF PUBLIC WORKS AND HIGHWAYS

PJHL - PMO	BUREAU OF DESIGN		OFFICE OF THE SECRETARY	
Submitted By:	Reviewed By:	Recommended By:	Recommended By: (See cover sheet for Signature)	Approved By: (See cover sheet for Signature/Approval)
DANILO C. TRAJANO	ADRIANO M. DOROY	GILBERTO S. REYES	MANUEL M. BONOAN	SIMEON A. DATUMANONG
Project Director	Chief, Bridges Division	Director IV (OIC)	Undersecretary	Secretary

PROJECT AND LOCATION :
THE DETAILED DESIGN STUDY ON UPGRADING INTER-URBAN HIGHWAY SYSTEM ALONG THE PAN-PHILIPPINE HIGHWAY (Plaridel, Cabanatuan and San Jose Bypasses)
PLARIDEL BYPASS - CONTRACT PACKAGE III

SCALE : AS SHOWN
FULL SIZE A1

SHEET CONTENTS :
BRIDGE NO. 9
TYPICAL PRECAST CONCRETE PILE DETAILS (INITIAL STAGE)

SHEET NO. : BS-03