SUBSTRUCTURE

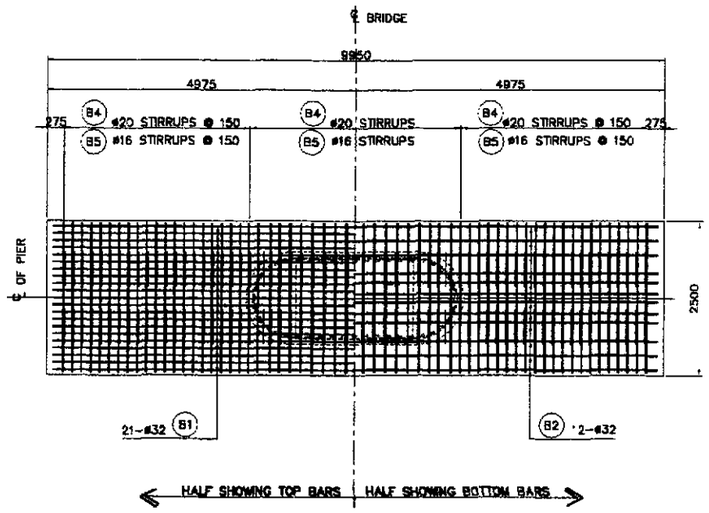

1 / - PLAN
SCALE 1:50

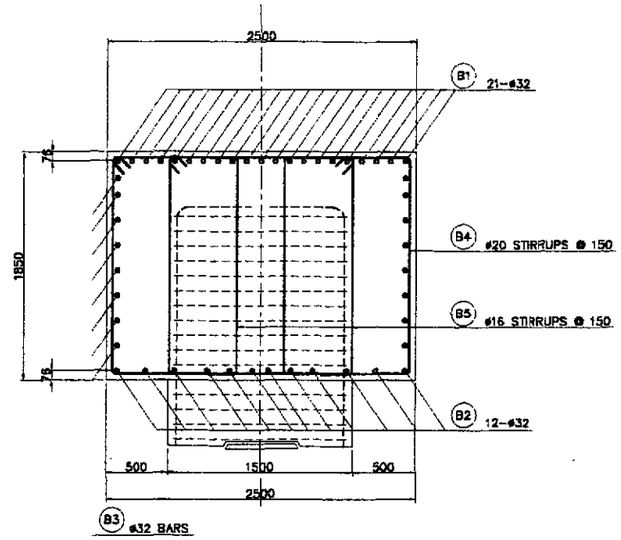

3 / - SECTION
SCALE 1:25

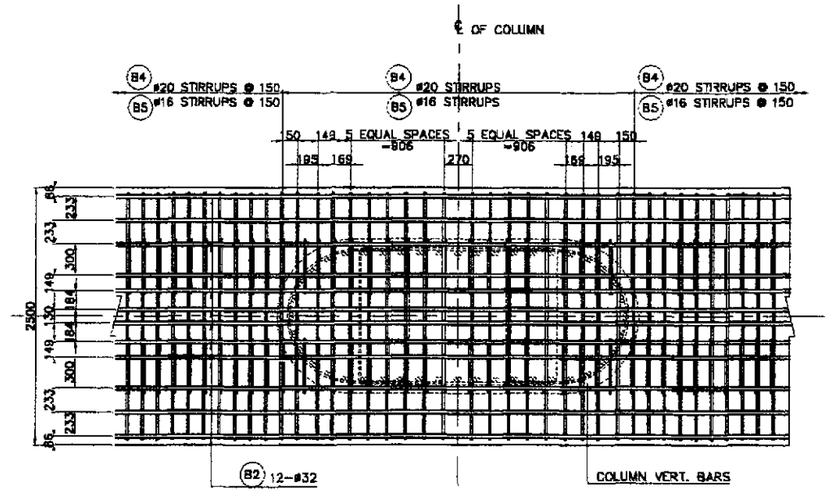

5 / - DETAIL
SCALE 1:30

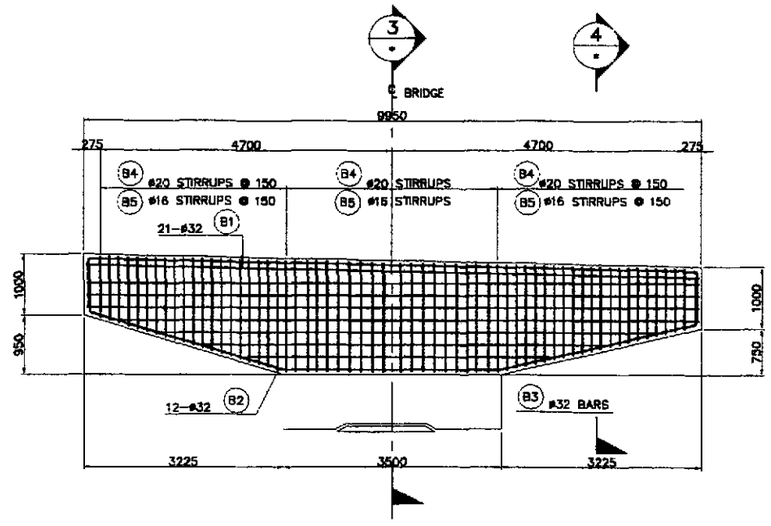

2 / - ELEVATION
SCALE 1:50

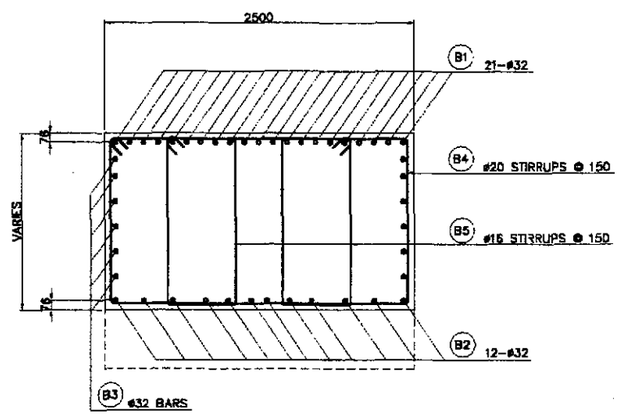

4 / - SECTION
SCALE 1:25

A / - COPING REINFORCEMENT DETAILS(P5, P10 & P26)
SCALE AS SHOWN

BAR BENDING DIAGRAM

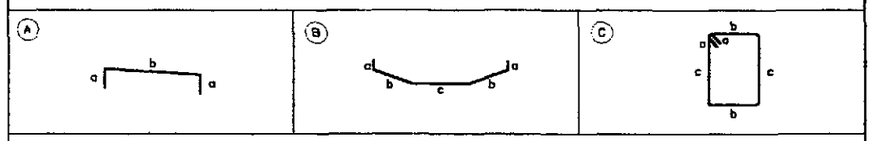

SCHEDULE OF REINFORCEMENT

LOCATION	BAR MARK	SIZE (mm)	BEND TYPE	DIMENSION(mm) OUT TO OUT a	b	c	d	e	f	LENGTH (mm)	NO. REQ'D.	UNIT WEIGHT (kg/m)	WEIGHT (kg) GRADE 40	GRADE 60
(P5, P10 & P26)	B1	32	A	900	9850					11650	21	6.313		1544.48
	B2	32	B	900	3200	3400				11600	12	6.313		878.77
	B3	32	A	675	8350(ave.)					9700	14	6.313		857.31
	B4	20	C	260	2400	1445(ave.)				8210	65	2.466		1315.98
	B5	16	C	260	550	1445(ave.)				4510	130	1.578	925.18	
										TOTAL WEIGHT PER COPING =			925.18	4596.53
										TOTAL WEIGHT FOR (3) PIERS =			2775.54	13789.59

THE REINFORCEMENT SHOWN ON THIS TABLE IS FOR REFERENCE ONLY. THE CONTRACTOR SHOULD CHECK AND VERIFY ALL DIMENSIONS, SIZES AND QUANTITIES OF REINFORCEMENT.

JICA
JAPAN INTERNATIONAL COOPERATION AGENCY
KEI KATAHIRA & ENGINEERS INTERNATIONAL
YEC YACHIYO ENGINEERING CO., LTD.

	DATE	SIGNATURE
DESIGNED	9/2/02	M. S. NAVAL
CHECKED	9/23/02	C. SANTOS
SUBMITTED	10/4/02	M. KIKUCHI TEAM LEADER

REPUBLIC OF THE PHILIPPINES
DEPARTMENT OF PUBLIC WORKS AND HIGHWAYS

PUHL - PMO	BUREAU OF DESIGN		OFFICE OF THE SECRETARY	
Submitted By:	Reviewed By:	Recommended By:	Recommended By: (See cover sheet for Signature)	Approved By: (See cover sheet for Signature/Approval)
DANILO C. TRAJANO, Project Director	ADRIANO M. DOROY, Chief, Bridges Division	GILBERTO S. REYES, Director IV (OIC)	MANUEL M. BONDAN, Undersecretary	SIMEON A. DATUMANONG, Secretary

PROJECT AND LOCATION :
THE DETAILED DESIGN STUDY ON UPGRADING INTER-URBAN HIGHWAY SYSTEM ALONG THE PAN-PHILIPPINE HIGHWAY (Plaridel, Cabanatuan and San Jose Bypasses)
PLARIDEL BYPASS - CONTRACT PACKAGE III

SCALE : AS SHOWN FULL SIZE A1

SHEET CONTENTS :
BRIDGE NO. 8 ANGAT RIVER BRIDGE
COPING REINFORCEMENT DETAILS (P5, P10, & P26)
(INITIAL STAGE)

SHEET NO. : B8A-41

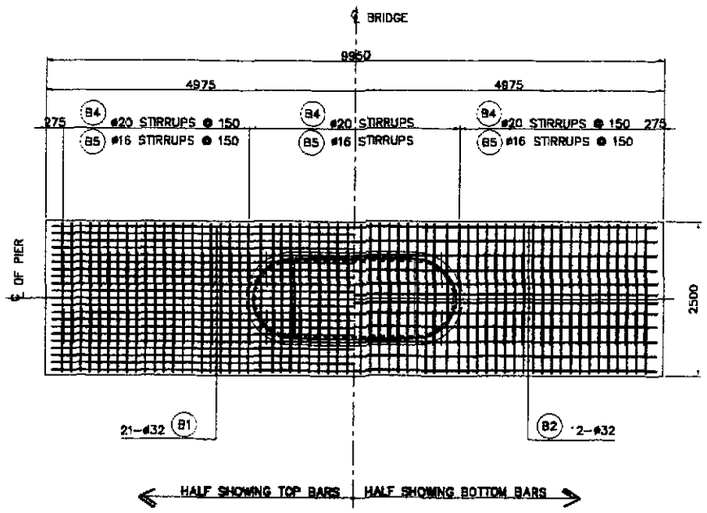

1 - PLAN
SCALE 1:50

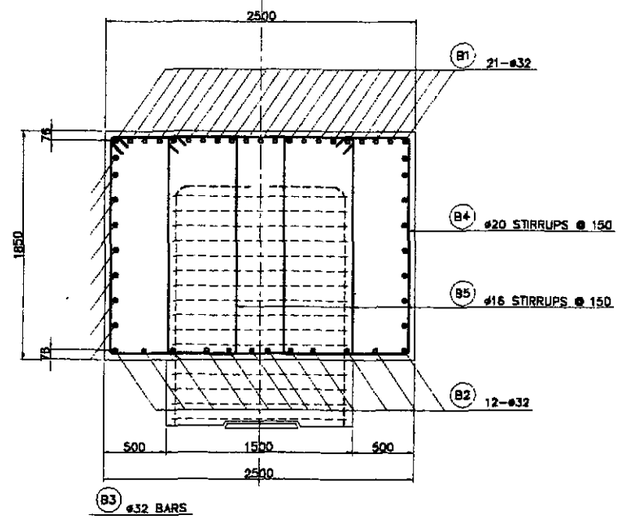

3 - SECTION
SCALE 1:25

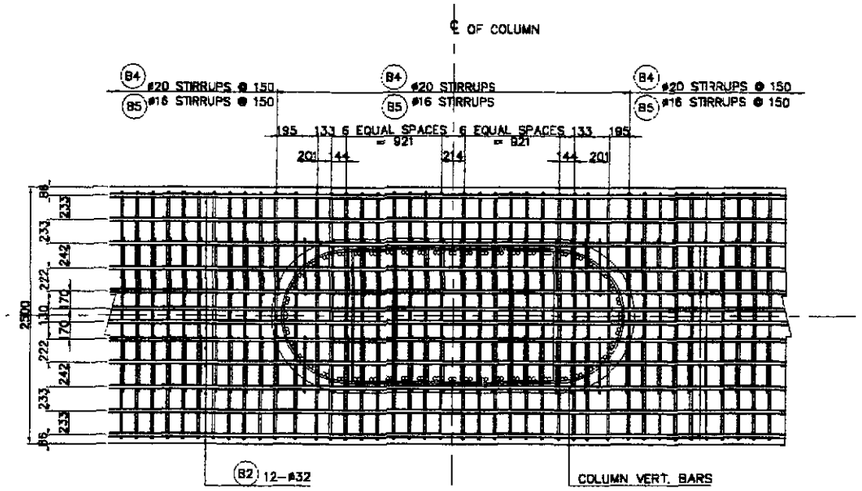

5 - DETAIL
SCALE 1:30

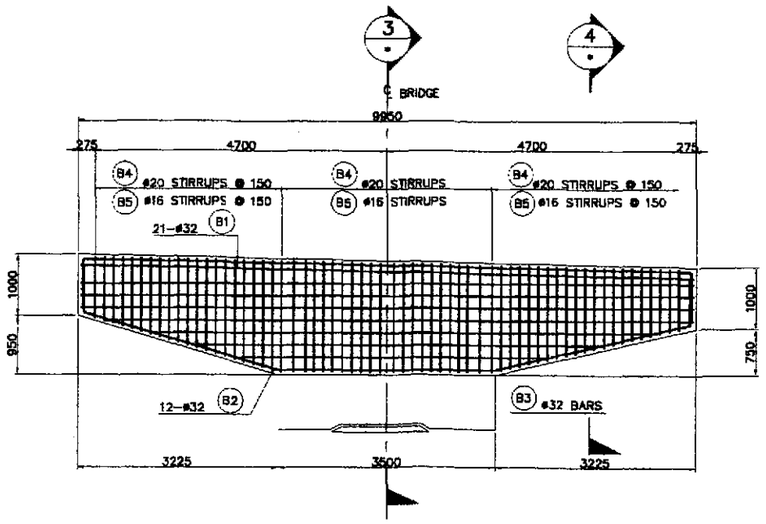

2 - ELEVATION
SCALE 1:50

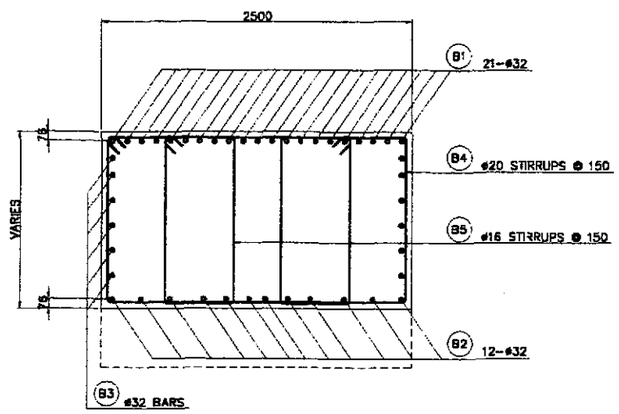

4 - SECTION
SCALE 1:25

A - COPING REINFORCEMENT DETAILS(P1-P4, P6-P9, P11-P13, P22-P25 & P27-P29)
SCALE AS SHOWN

BAR BENDING DIAGRAM

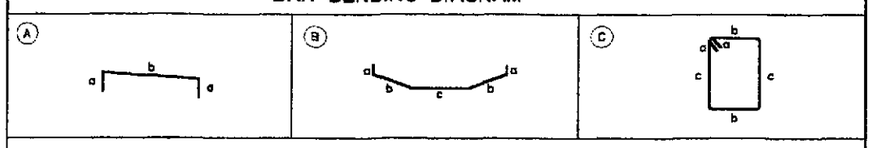

SCHEDULE OF REINFORCEMENT

LOCATION	BAR MARK	SIZE (mm)	BEND TYPE	DIMENSION(mm) OUT TO OUT a	b	c	d	e	f	LENGTH (mm)	NO. REQ'D.	UNIT WEIGHT (kg/m)	WEIGHT (kg) GRADE 40	GRADE 60
(P1, P2, P3, P4, P6, P7, P8, P9, P11, P12, P13, P22, P23, P24, P25, P27, P28 & P29)	B1	32	A	900	9850					11650	21	6.313		1544.48
	B2	32	B	900	3200	3400				11600	12	6.313		878.77
	B3	32	A	675	8350(ave.)					9700	14	6.313		857.31
	B4	20	C	260	2400	1445(ave.)				8210	65	2.466		1315.98
	B5	16	C	260	550	1445(ave.)				4510	130	1.578	925.18	
										TOTAL WEIGHT PER COPING =			925.18	4586.53
										TOTAL WEIGHT FOR (18) PIERS =			16653.27	82737.56

THE REINFORCEMENT SHOWN ON THIS TABLE IS FOR REFERENCE ONLY. THE CONTRACTOR SHOULD CHECK AND VERIFY ALL DIMENSIONS, SIZES AND QUANTITIES OF REINFORCEMENT.

JICA
JAPAN INTERNATIONAL COOPERATION AGENCY
KEI KATAHIRA & ENGINEERS INTERNATIONAL
YEC YACHIYO ENGINEERING CO., LTD.

	DATE	SIGNATURE
DESIGNED	9/2/02	M. S. NAVAL
CHECKED	9/23/02	J. C. SANTOS
SUBMITTED	10/14/02	M. KATAHIRA TEAM LEADER

REPUBLIC OF THE PHILIPPINES
DEPARTMENT OF PUBLIC WORKS AND HIGHWAYS

PUHL - PMO	BUREAU OF DESIGN		OFFICE OF THE SECRETARY	
Submitted By:	Reviewed By:	Recommended By:	Recommended By: (See cover sheet for Signature)	Approved By: (See cover sheet for Signature/Approval)
DANILO C. TRAJANO	ADRIANO M. DOROY	GILBERTO S. REYES	MANUEL M. BONGAN	SIMEON A. DATUMANONG
Project Director	Chief, Bridges Division	Director IV (OIC)	Undersecretary	Secretary

PROJECT AND LOCATION :
THE DETAILED DESIGN STUDY ON UPGRADING INTER-URBAN HIGHWAY SYSTEM ALONG THE PAN-PHILIPPINE HIGHWAY (Plaridel, Cabanatuan and San Jose Bypasses)
PLARIDEL BYPASS - CONTRACT PACKAGE III

SCALE : AS SHOWN FULL SIZE A1

SHEET CONTENTS :
BRIDGE NO. 8 ANGAT RIVER BRIDGE
COPING REINFORCEMENT DETAILS (P1-P4,P6-P9,P11-P13,P22-P25 & P27-P29)
(INITIAL STAGE)

SHEET NO. : B8A-42

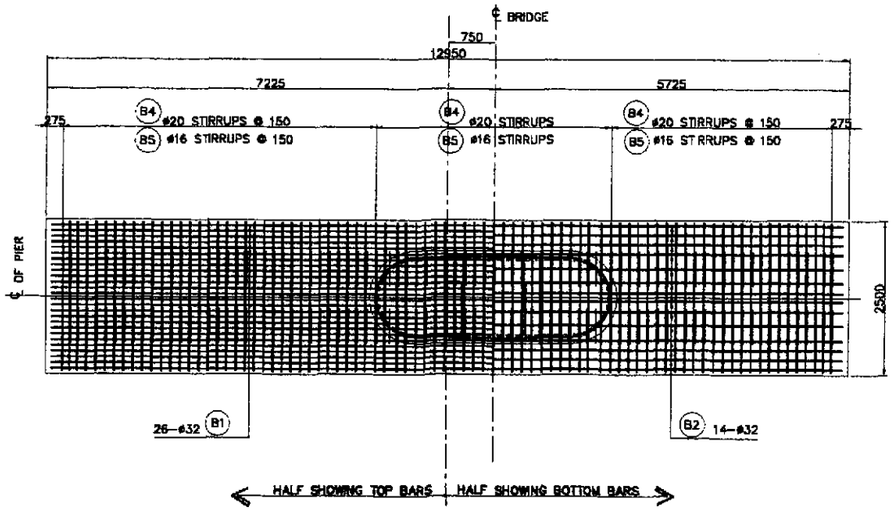

1 PLAN
SCALE 1:50

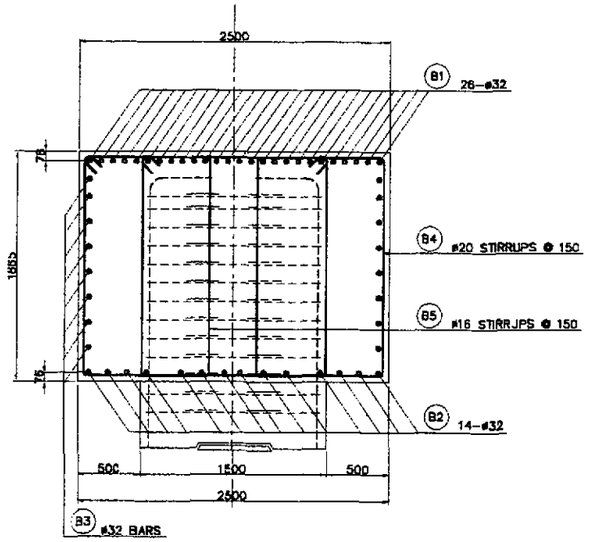

3 SECTION
SCALE 1:25

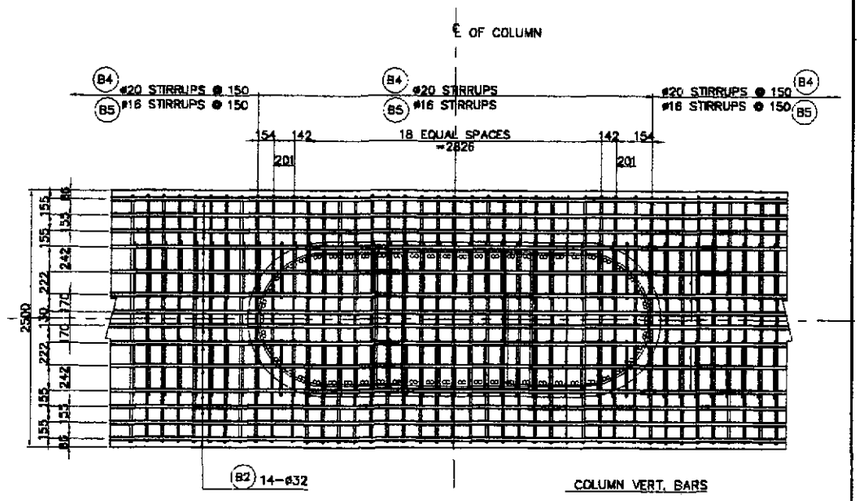

5 DETAIL
SCALE 1:30

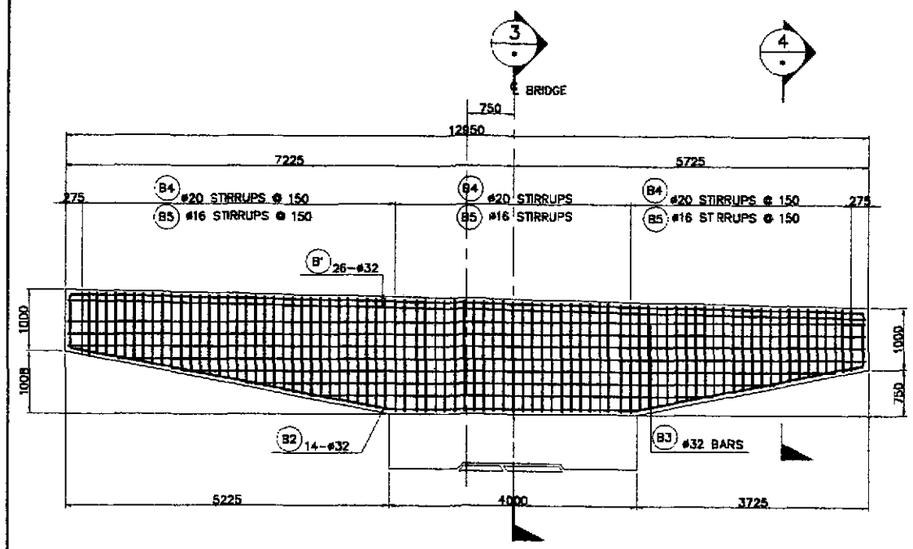

2 ELEVATION
SCALE 1:50

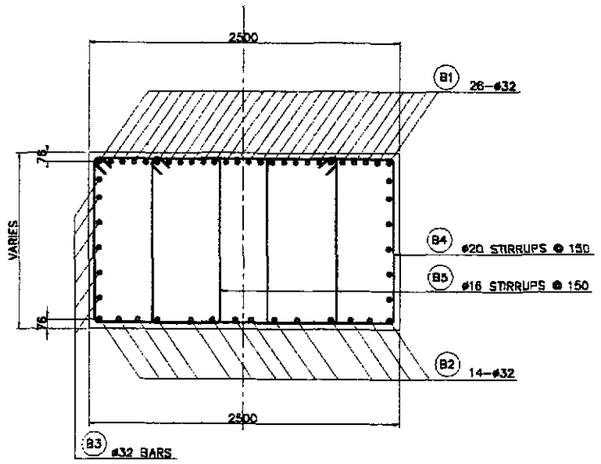

4 SECTION
SCALE 1:25

BAR BENDING DIAGRAM

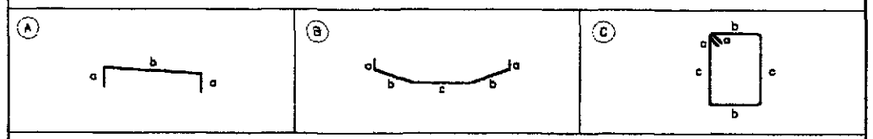

SCHEDULE OF REINFORCEMENT

LOCATION	BAR MARK	SIZE (mm)	BEND TYPE	DIMENSION(mm) OUT TO OUT a	b	c	d	e	f	LENGTH (mm)	NO. REQ'D.	UNIT WEIGHT (kg/m)	WEIGHT (kg) GRADE 40	GRADE 60
PIER 30	B1	32	A	900	12850					14650	56	6.313		2404.62
	B2	32	B	900	5200	3900	3700			14600	14	6.313		1290.38
	B3	32	A	675	0555(min)					11905	14	6.313		1052.19
	B4	20	C	260	2400	1480(min)				8280	86	2.466		755.99
	B5	16	C	260	550	1480(min)				4580	172	1.578	1243.09	
										TOTAL WEIGHT PER COPING =			1243.09	6503.18

THE REINFORCEMENT SHOWN ON THIS TABLE IS FOR REFERENCE ONLY. THE CONTRACTOR SHOULD CHECK AND VERIFY ALL DIMENSIONS, SIZES AND QUANTITIES OF REINFORCEMENT.

A COPING REINFORCEMENT DETAILS(PIER 30)
SCALE AS SHOWN

JICA
JAPAN INTERNATIONAL COOPERATION AGENCY
KEI KATAHIRA & ENGINEERS INTERNATIONAL
YEC YACHIYO ENGINEERING CO., LTD.

	DATE	SIGNATURE
DESIGNED	9/21/02	M. S. NAVAL
CHECKED	9/23/02	J. C. SANTOS
SUBMITTED	10/14/02	TEAM LEADER

REPUBLIC OF THE PHILIPPINES
DEPARTMENT OF PUBLIC WORKS AND HIGHWAYS

FUHL – PMO	BUREAU OF DESIGN		OFFICE OF THE SECRETARY	
Submitted By:	Reviewed By:	Recommended By:	Recommended By: (See cover sheet for Signature)	Approved By: (See cover sheet for Signature/Approval)
DANILO C. TRAJANO, Project Director	ADRIANO M. DOROY, Chief, Bridges Division	GILBERTO S. REYES, Director IV (OIC)	MANUEL M. BONDAN, Undersecretary	SIMEON A. DATUMANONG, Secretary

PROJECT AND LOCATION :
THE DETAILED DESIGN STUDY ON UPGRADING INTER-URBAN HIGHWAY SYSTEM ALONG THE PAN-PHILIPPINE HIGHWAY (Plaridel, Cabanatuan and San Jose Bypasses)
PLARIDEL BYPASS - CONTRACT PACKAGE III

SCALE : AS SHOWN
FULL SIZE A1

SHEET CONTENTS :
BRIDGE NO. 8 ANGAT RIVER BRIDGE
COPING REINFORCEMENT DETAILS (PIER 30)
(INITIAL STAGE)

SHEET NO. : B8A-43

SCHEDULE OF DIMENSIONS

PIER	H (mm)	A (mm)
PIER 5	12500	6500
PIER 10	12500	6500
PIER 26	10050	4200

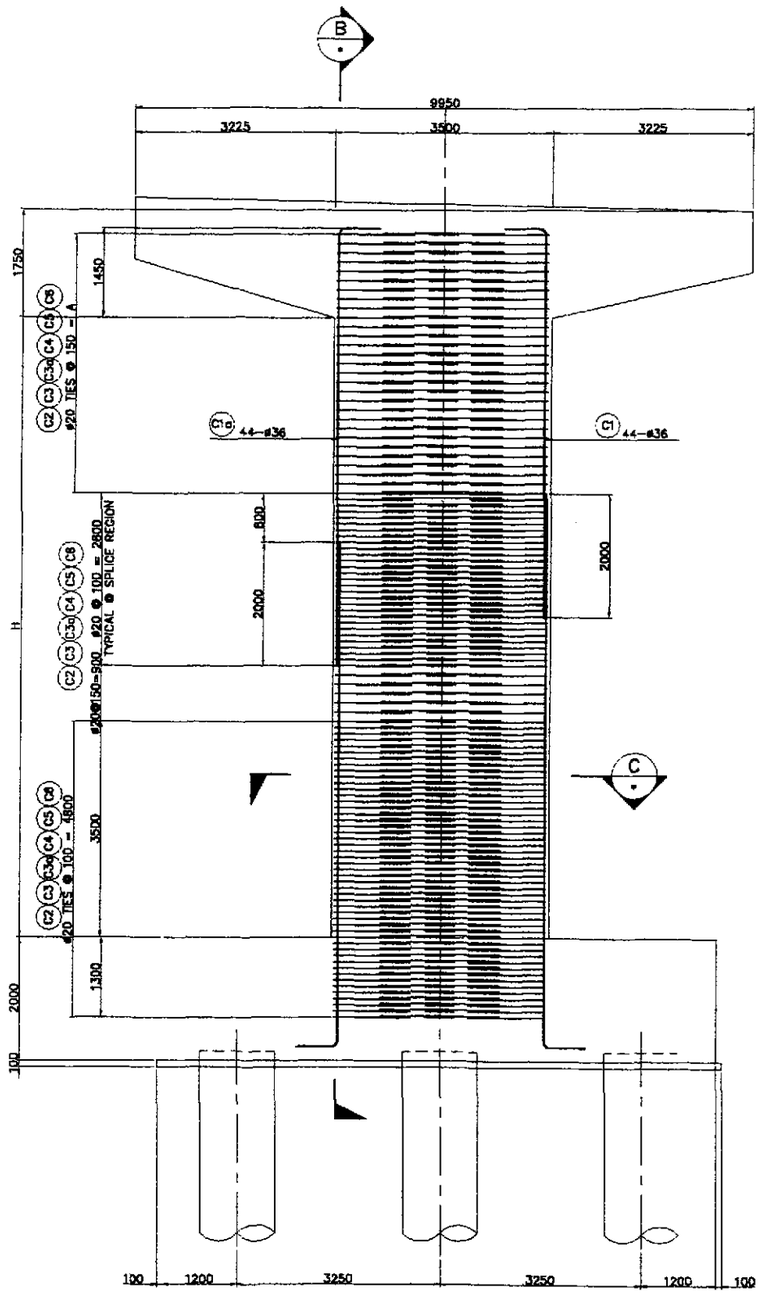

A ELEVATION
SCALE 1:50

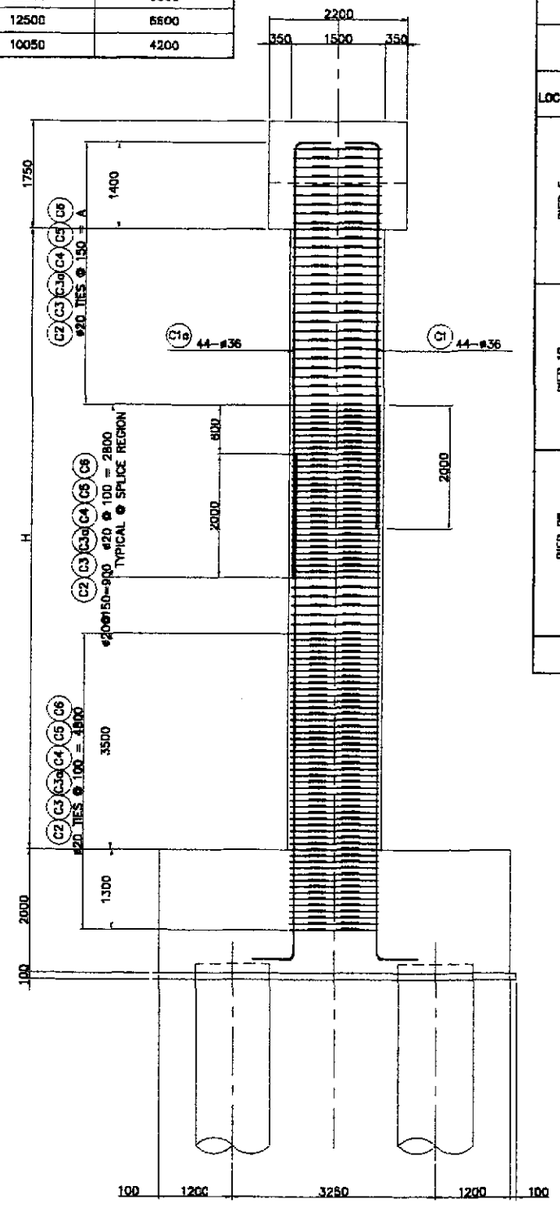

B SECTION
SCALE 1:50

BAR BENDING DIAGRAM

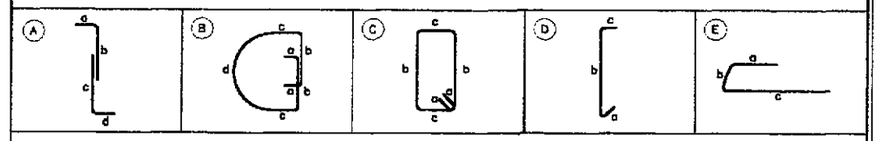

SCHEDULE OF REINFORCEMENT

LOCATION	BAR MARK	SIZE (mm)	BEND TYPE	DIMENSION(mm) OUT TO OUT a	b	c	d	e	f	LENGTH (mm)	NO. REQ'D.	UNIT WEIGHT (kg/m)	WEIGHT (kg) GRADE 40	GRADE 60
PIER 5	C1	36	A	660	7900	9825	660			19045	44	7.99		6695.46
	C1a	36	A	660	8700	9025	660			19045	44	7.99		6695.46
	C2	20	B	225	885	530	2000			5300	256	2.466		3345.89
	C3	20	C	260	1350	1920				7060	129	2.466		2245.88
	C3a	20	C	260	1350	475				4170	129	2.466		1326.54
	C4	20	D	260	1170	335				1765	256	2.466		1114.24
	C5	20	E	1285	235	2300				3820	512	2.466		4823.10
	C6	20	D	260	2625	335				3220	256	2.466		2032.77
										TOTAL WEIGHT PER PIER		=	0.00	28,279.32
PIER 10	C1	36	A	660	7900	9825	660			19045	44	7.99		6695.46
	C1a	36	A	660	8700	9025	660			19045	44	7.99		6695.46
	C2	20	B	225	885	530	2000			5300	258	2.466		3372.00
	C3	20	C	260	1350	1920				7060	129	2.466		2245.88
	C3a	20	C	260	1350	475				4170	129	2.466		1326.54
	C4	20	D	260	1170	335				1765	258	2.466		1122.94
	C5	20	E	1285	235	2300				3820	515	2.466		4860.78
	C6	20	D	260	2625	335				3220	258	2.466		2048.65
										TOTAL WEIGHT PER PIER		=	0.00	28,367.71
PIER 26	C1	36	A	660	6675	8600	660			16595	44	7.99		5834.14
	C1a	36	A	660	7475	7800	660			16595	44	7.99		5834.14
	C2	20	B	225	885	530	2000			5300	222	2.466		2901.50
	C3	20	C	260	1350	1920				7060	111	2.466		1932.51
	C3a	20	C	260	1350	475				4170	111	2.466		1141.44
	C4	20	D	260	1170	335				1765	222	2.466		966.25
	C5	20	E	1285	235	2300				3820	444	2.466		4182.53
	C6	20	D	260	2625	335				3220	222	2.466		1762.80
										TOTAL WEIGHT PER PIER		=	0.00	24,555.31
										GRAND TOTAL WEIGHT (3) PIERS		=	0.00	81,202.34

THE REINFORCEMENT SHOWN ON THIS TABLE IS FOR REFERENCE ONLY. THE CONTRACTOR SHOULD CHECK AND VERIFY ALL DIMENSIONS, SIZES AND QUANTITIES OF REINFORCEMENT.

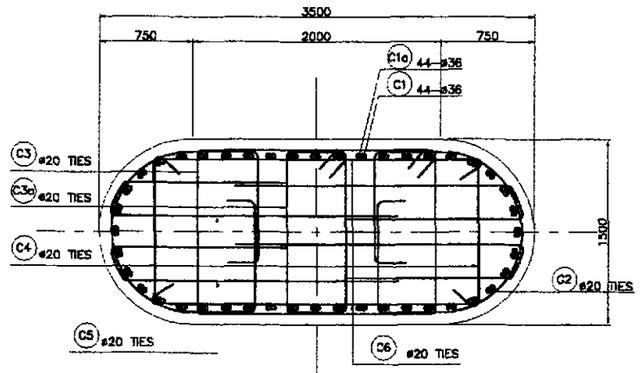

C SECTION
SCALE 1:25

1 COLUMN REINFORCEMENT DETAILS (PIER 5, PIER 10 & PIER 26)
SCALE AS SHOWN

JICA
JAPAN INTERNATIONAL COOPERATION AGENCY
KEI KATAHIRA & ENGINEERS INTERNATIONAL
YEC YACHIYO ENGINEERING CO., LTD.

	DATE	SIGNATURE
DESIGNED	9/21/02	A. S. NAGAL
CHECKED	9/23/02	J. C. SANTOS
SUBMITTED	10/24/02	M. SUGUCHI TEAM LEADER

REPUBLIC OF THE PHILIPPINES
DEPARTMENT OF PUBLIC WORKS AND HIGHWAYS

PUHL – PMO	BUREAU OF DESIGN		OFFICE OF THE SECRETARY	
Submitted By:	Reviewed By:	Recommended By:	Recommended By: (See cover sheet for Signature)	Approved By: (See cover sheet for Signature/Approval)
DANILO C. TRAJANO	ADRIANO M. DOROY	GILBERTO S. REYES	MANUEL M. BONGAN	SIMEON A. DATUMANONG
Project Director	Chief, Bridges Division	Director IV (OIC)	Undersecretary	Secretary

PROJECT AND LOCATION :
THE DETAILED DESIGN STUDY ON UPGRADING INTER-URBAN HIGHWAY SYSTEM ALONG THE PAN-PHILIPPINE HIGHWAY (Plaridel, Cabanatuan and San Jose Bypasses)
PLARIDEL BYPASS - CONTRACT PACKAGE III

SCALE : AS SHOWN
FULL SIZE A1

SHEET CONTENTS :
BRIDGE NO. 8 ANGAT RIVER BRIDGE
COLUMN REINFORCEMENT DETAILS (P5, P10, & P26)
(INITIAL STAGE)

SHEET NO. : B8A-44

SCHEDULE OF DIMENSIONS

PIER	H (mm)	A (mm)
PIER 1, 2, 3 & 4	12500	6600
PIER 6, 7, 8 & 9	12500	6600
PIER 11, 12 & 13	10850	5000
PIER 22, 23, 24 & 25	10250	4400
PIER 27, 28 & 29	10050	4200

BAR BENDING DIAGRAM

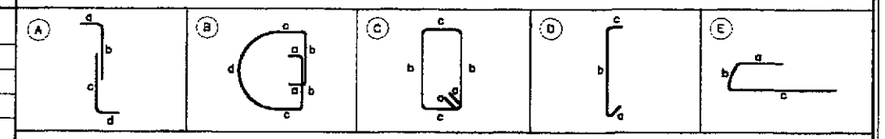

SCHEDULE OF REINFORCEMENT

LOCATION	BAR MARK	SIZE (mm)	BEND TYPE	DIMENSION(mm) OUT TO OUT a	b	c	d	e	f	LENGTH (mm)	NO. REQ'D.	UNIT WEIGHT (kg/m)	WEIGHT (kg) GRADE 40	GRADE 60
P1, P2, P3 & P4	C1	36	A	660	7900	9825	660			19045	52	7.99		7912.82
	C1a	36	A	660	8700	9025	660			19045	52	7.99		7912.82
	C2	20	B	225	895	450	2000			5140	258	2.466		3270.21
	C3	20	C	260	1350	1900				7020	129	2.466		2233.16
	C3a	20	C	260	1350	400				4020	129	2.466		1276.82
	C4	20	D	260	1175	335				1770	258	2.466		1126.12
	C5	20	E	1300	250	2285				3835	56	2.466		4879.87
	C6	20	D	260	2775	335				3370	258	2.466		2144.09
										TOTAL WEIGHT PER PIER			= 0.00	30,757.91
P6, P7, P8 & P9	C1	36	A	660	7900	9825	660			19045	52	7.99		7912.82
	C1a	36	A	660	8700	9025	660			19045	52	7.99		7912.82
	C2	20	B	225	895	450	2000			5140	262	2.466		3320.91
	C3	20	C	260	1350	1900				7020	131	2.466		2267.78
	C3a	20	C	260	1350	400				4020	131	2.466		1298.64
	C4	20	D	260	1175	335				1770	262	2.466		1143.58
	C5	20	E	1300	250	2285				3835	524	2.466		4955.53
	C6	20	D	260	2775	335				3370	262	2.466		2177.33
										TOTAL WEIGHT PER PIER			= 0.00	30,989.41
P11, P12 & P13	C1	36	A	660	7075	9000	660			17395	52	7.99		7227.27
	C1a	36	A	660	7875	8200	660			17395	52	7.99		7227.27
	C2	20	B	225	895	450	2000			5140	236	2.466		2991.36
	C3	20	C	260	1350	1900				7020	118	2.466		2042.74
	C3a	20	C	260	1350	400				4020	118	2.466		1169.77
	C4	20	D	260	1175	335				1770	236	2.466		1030.10
	C5	20	E	1300	250	2285				3835	472	2.466		4463.76
	C6	20	D	260	2775	335				3370	236	2.466		1961.26
										TOTAL WEIGHT PER PIER			= 0.00	28,113.53
P22, P23, P24, & P25	C1	36	A	660	6775	8700	660			16795	52	7.99		6977.99
	C1a	36	A	660	7575	7900	660			16795	52	7.99		6977.99
	C2	20	B	225	895	450	2000			5140	226	2.466		2864.60
	C3	20	C	260	1350	1900				7020	113	2.466		1956.18
	C3a	20	C	260	1350	400				4020	113	2.466		1120.21
	C4	20	D	260	1175	335				1770	226	2.466		986.45
	C5	20	E	1300	250	2285				3835	452	2.466		4274.61
	C6	20	D	260	2775	335				3370	226	2.466		1878.15
										TOTAL WEIGHT PER PIER			= 0.00	27,036.18
P27, P28 & P29	C1	36	A	660	6675	8600	660			16595	52	7.99		6894.89
	C1a	36	A	660	7475	7800	660			16595	52	7.99		6894.89
	C2	20	B	225	895	450	2000			5140	224	2.466		2839.25
	C3	20	C	260	1350	1900				7020	112	2.466		1938.87
	C3a	20	C	260	1350	400				4020	112	2.466		1110.29
	C4	20	D	260	1175	335				1770	224	2.466		977.72
	C5	20	E	1300	250	2285				3835	448	2.466		4236.79
	C6	20	D	260	2775	335				3370	224	2.466		1861.53
										TOTAL WEIGHT PER PIER			= 0.00	26,754.23
										GRAND TOTAL WEIGHT (18) PIERS			= 0.00	519,737.30

THE REINFORCEMENT SHOWN ON THIS TABLE IS FOR REFERENCE ONLY. THE CONTRACTOR SHOULD CHECK AND VERIFY ALL DIMENSIONS, SIZES AND QUANTITIES OF REINFORCEMENT.

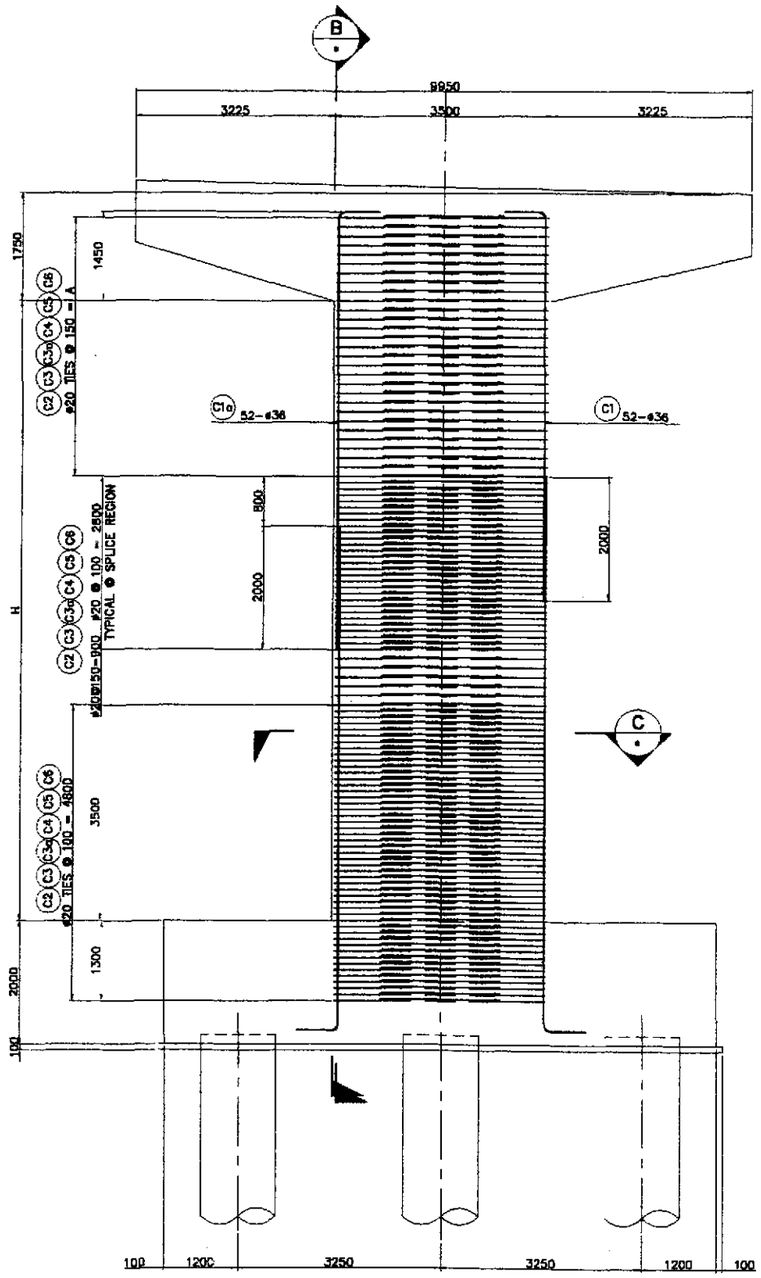

A ELEVATION
SCALE 1 : 50

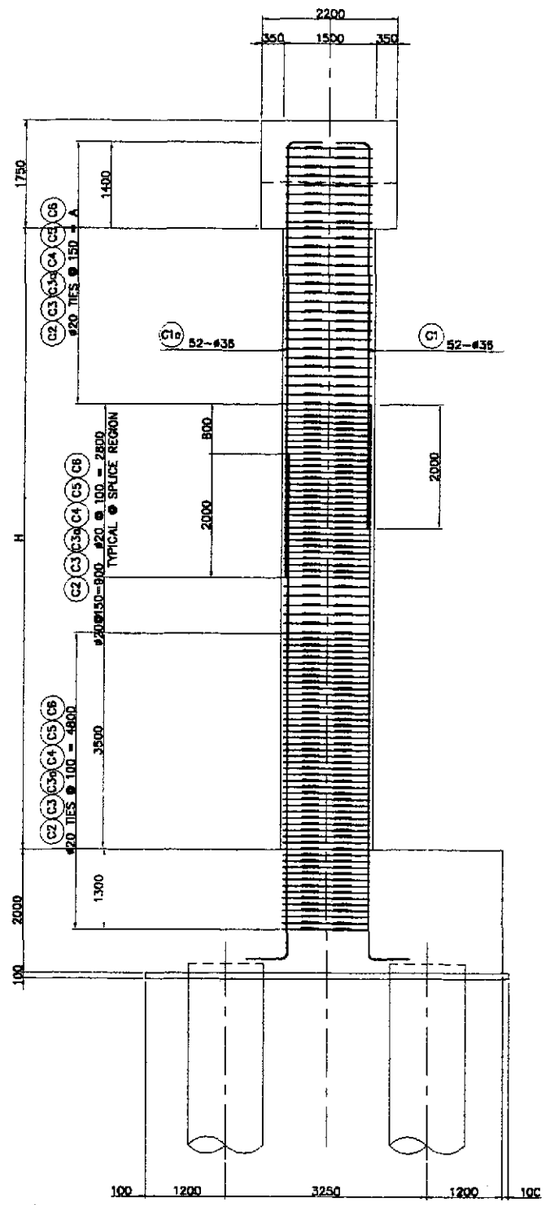

B SECTION
SCALE 1 : 50

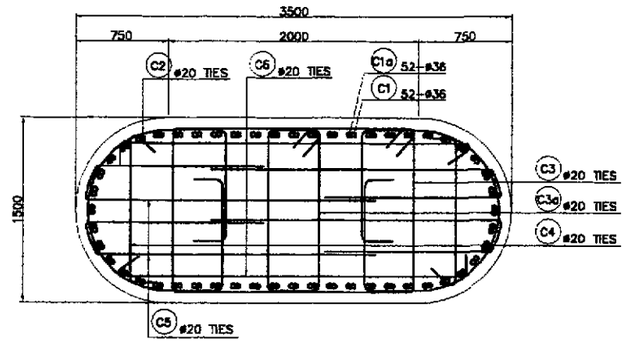

C SECTION
SCALE 1 : 25

1 COLUMN REINF. DETAILS (PIER 1 to PIER 4, PIER 6 to PIER 9, PIER 11 to PIER 13, PIER 22 to PIER 25 & PIER 27 to PIER 29)
SCALE AS SHOWN

JICA
JAPAN INTERNATIONAL COOPERATION AGENCY
KATAHIRA & ENGINEERS INTERNATIONAL
YACHIYO ENGINEERING CO., LTD.

	DATE	SIGNATURE
DESIGNED	9/21/02	J. S. NAVAL
CHECKED	9/23/02	E. SANTOS
SUBMITTED	10/14/02	TEAM LEADER

REPUBLIC OF THE PHILIPPINES
DEPARTMENT OF PUBLIC WORKS AND HIGHWAYS

PUHL – PMO	BUREAU OF DESIGN		OFFICE OF THE SECRETARY	
Submitted By:	Reviewed By:	Recommended By:	Recommended By: (See cover sheet for Signature)	Approved By: (See cover sheet for Signature/Approval)
DANILO C. TRAJANO	ADRIANO M. DOROY	GILBERTO S. REYES	MANUEL M. BONOAN	SIMEON A. DATUMANONG
Project Director	Chief, Bridges Division	Director IV (OIC)	Undersecretary	Secretary

PROJECT AND LOCATION :
THE DETAILED DESIGN STUDY ON UPGRADING INTER-URBAN HIGHWAY SYSTEM ALONG THE PAN-PHILIPPINE HIGHWAY (Plaridel, Cabanatuan and San Jose Bypasses)
PLARIDEL BYPASS - CONTRACT PACKAGE III

SCALE : AS SHOWN
FULL SIZE A1

SHEET CONTENTS :
BRIDGE NO. 8 ANGAT RIVER BRIDGE
COLUMN REINFORCEMENT DETAILS (P1-P4,P6-P9,P11-P13,P22-P25 & P27-P29)
(INITIAL STAGE)

SHEET NO. : B8A-45

BAR BENDING DIAGRAM

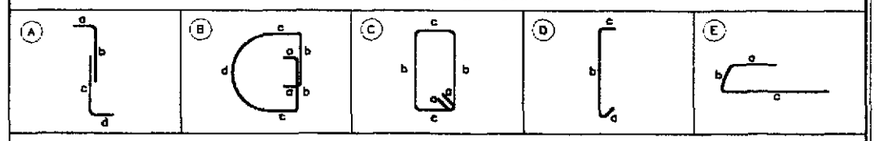

SCHEDULE OF REINFORCEMENT

LOCATION	BAR MARK	SIZE (mm)	BEND TYPE	DIMENSION(mm) OUT TO OUT a	b	c	d	e	f	LENGTH (mm)	NO. REQ'D.	UNIT WEIGHT (kg/m)	WEIGHT (kg) GRADE 40	GRADE 60
PIER 30	C1	36	A	660	6675	8600	660			16595	58	7.99		7690.45
	C1a	36	A	660	7475	7800	660			16595	58	7.99		7690.45
	C2	20	B	225	895	785	2000			5770	224	2.466		3187.26
	C3	20	C	260	1350	1525				6270	221	2.466		3417.06
	C3a	20	C	260	1350	585				4350	112	2.466		1201.44
	C3b	20	C	260	1350	260				3740	224	2.466		2065.92
	C4	20	D	260	1000	335				1595	224	2.466		881.05
	C5	20	E	1535	195	2500				4230	448	2.466		4673.17
	C6	20	D	260	3300	335				3895	224	2.466		2151.54
										TOTAL WEIGHT PER PIER =			0.00	32,958.34

THE REINFORCEMENT SHOWN ON THIS TABLE IS FOR REFERENCE ONLY. THE CONTRACTOR SHOULD CHECK AND VERIFY ALL DIMENSIONS, SIZES AND QUANTITIES OF REINFORCEMENT.

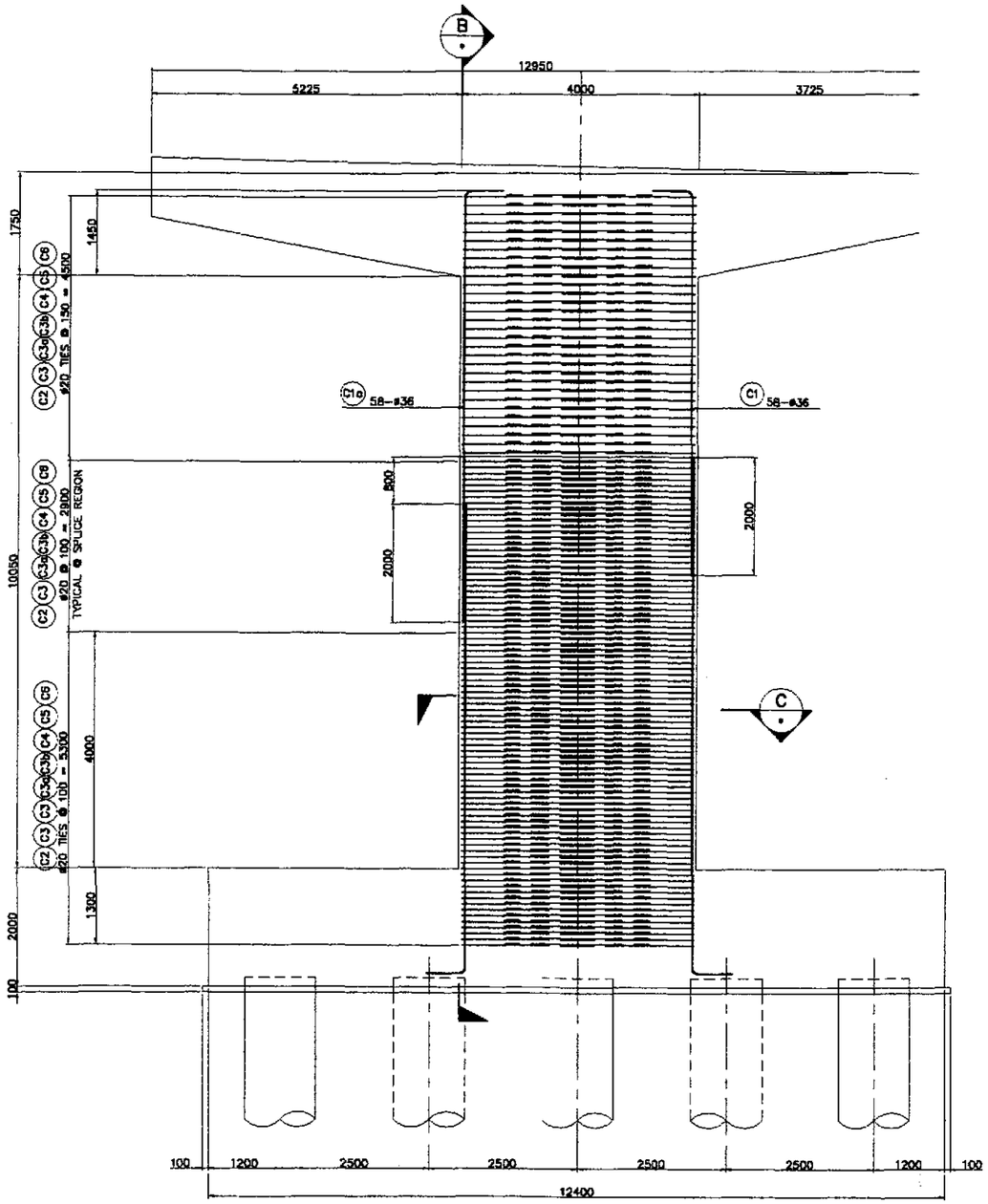

A ELEVATION
SCALE 1:50

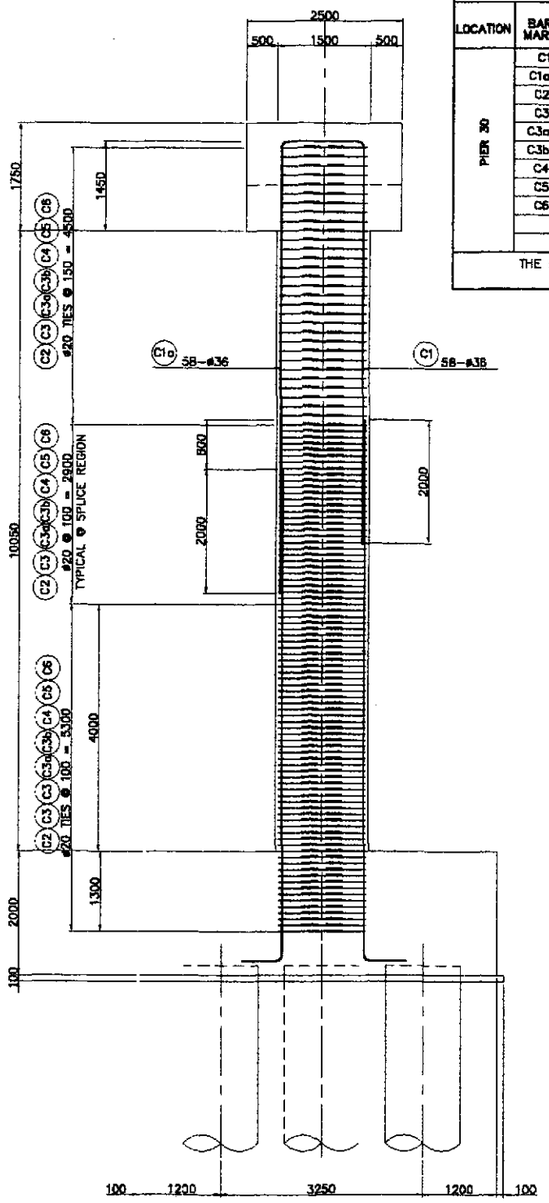

B SECTION
SCALE 1:50

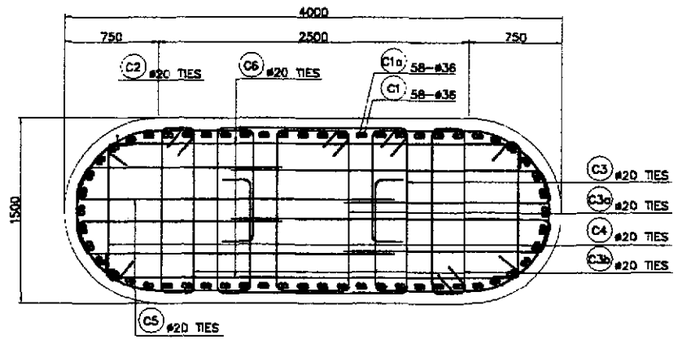

C SECTION
SCALE 1:25

1 COLUMN REINF. DETAILS (P30)
SCALE AS SHOWN

		DATE	SIGNATURE
JICA JAPAN INTERNATIONAL COOPERATION AGENCY	DESIGNED	9/21/02	M. S. NAVAL
KATAHIRA & ENGINEERS INTERNATIONAL / YACHIYO ENGINEERING CO., LTD.	CHECKED	9/23/02	J. C. SANTOS
	SUBMITTED	10/4/02	M. S. NAVAL TEAM LEADER

REPUBLIC OF THE PHILIPPINES
DEPARTMENT OF PUBLIC WORKS AND HIGHWAYS

PJHL – PMO	BUREAU OF DESIGN		OFFICE OF THE SECRETARY	
Submitted By:	Reviewed By:	Recommended By:	Recommended By: (See cover sheet for Signature)	Approved By: (See cover sheet for Signature/Approval)
DANILO C. TRAJANO	ADRIANO M. DOROY	GILBERTO S. REYES	MANUEL M. BONOAN	SIMEON A. DATUMANONG
Project Director	Chief, Bridges Division	Director IV (OIC)	Undersecretary	Secretary

PROJECT AND LOCATION :	SCALE :	SHEET CONTENTS :	SHEET NO. :
THE DETAILED DESIGN STUDY ON UPGRADING INTER-URBAN HIGHWAY SYSTEM ALONG THE PAN-PHILIPPINE HIGHWAY (Plaridel, Cabanatuan and San Jose Bypasses)	AS SHOWN	BRIDGE NO. 8 ANGAT RIVER BRIDGE COLUMN REINFORCEMENT DETAILS (PIER 30) (INITIAL STAGE)	B8A-46
PLARIDEL BYPASS - CONTRACT PACKAGE III	FULL SIZE A1		

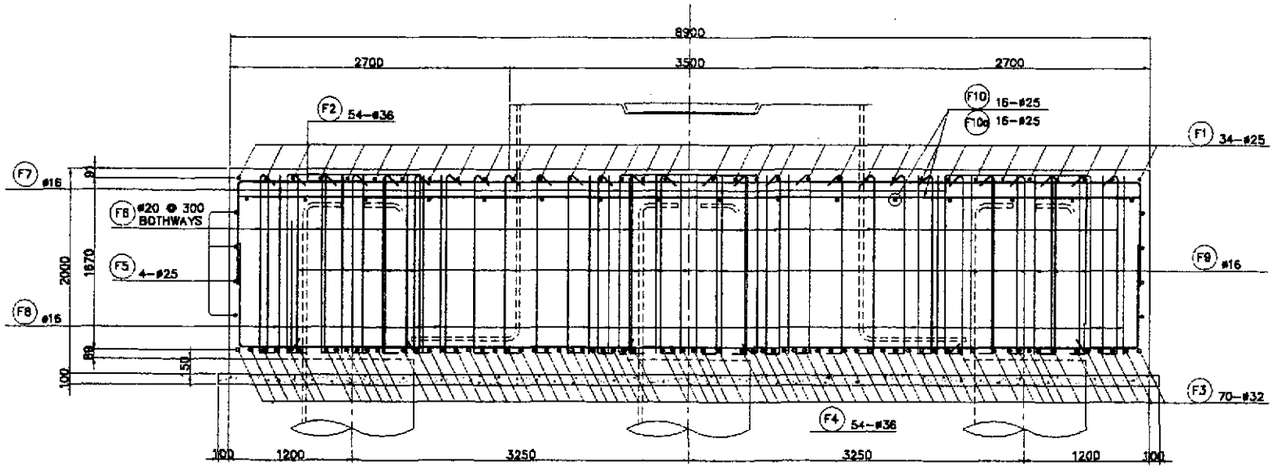

B SECTION
SCALE 1:30

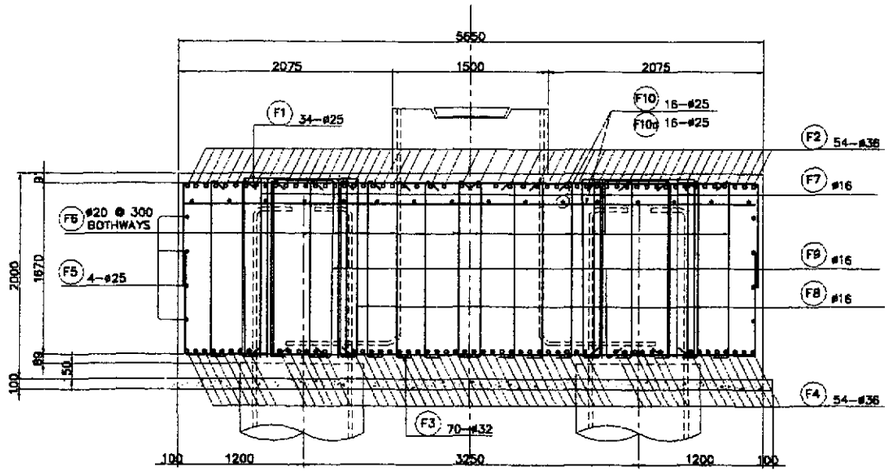

C SECTION
SCALE 1:30

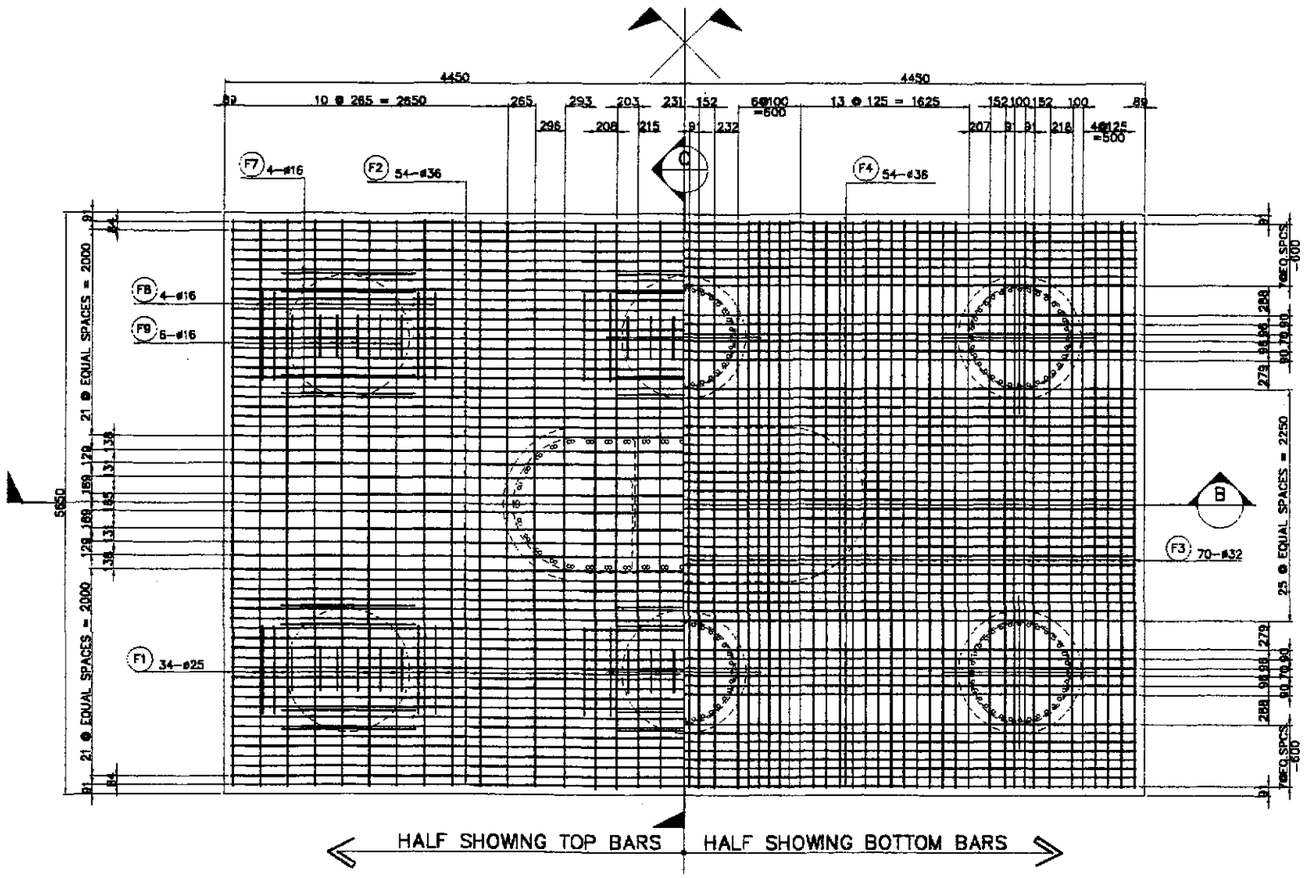

A PLAN
SCALE 1:30

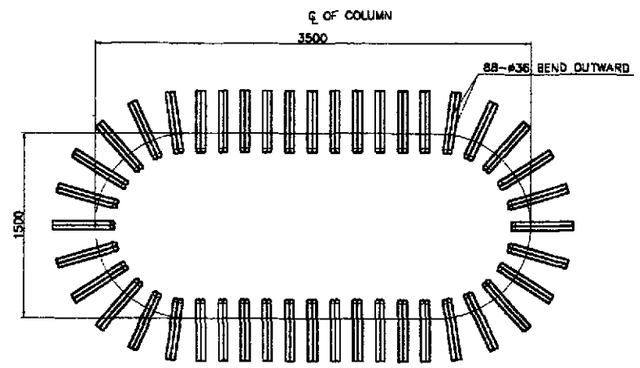

B DETAIL OF COLUMN MAIN BAR ARRANGEMENT @ BOTTOM
SCALE 1:25

1 PILECAP REINFORCEMENT DETAILS (P5, P10 & P26)
SCALE AS SHOWN

JICA
JAPAN INTERNATIONAL COOPERATION AGENCY
KEI KATAHIRA & ENGINEERS INTERNATIONAL
YEC YACHIYO ENGINEERING CO., LTD.

	DATE	SIGNATURE
DESIGNED	9/21/02	R. S. NAVA
CHECKED	9/23/02	J. C. SANTOS
SUBMITTED	10/4/02	M. Kuroda TEAM LEADER

REPUBLIC OF THE PHILIPPINES
DEPARTMENT OF PUBLIC WORKS AND HIGHWAYS

PJHL - PMO	BUREAU OF DESIGN		OFFICE OF THE SECRETARY	
Submitted By:	Reviewed By:	Recommended By:	Recommended By: (See cover sheet for Signature)	Approved By: (See cover sheet for Signature/Approval)
DANILO C. TRAJANO, Project Director	ADRIANO M. DOROY, Chief, Bridges Division	GILBERTO S. REYES, Director IV (OIC)	MANUEL M. BONDAN, Undersecretary	SIMEON A. DATUMANONG, Secretary

PROJECT AND LOCATION :
THE DETAILED DESIGN STUDY ON UPGRADING INTER-URBAN HIGHWAY SYSTEM ALONG THE PAN-PHILIPPINE HIGHWAY (Plaridel, Cabanatuan and San Jose Bypasses)
PLARIDEL BYPASS - CONTRACT PACKAGE III

SCALE : AS SHOWN
FULL SIZE A1

SHEET CONTENTS :
BRIDGE NO. 8 ANGAT RIVER BRIDGE
PILE CAP REINFORCEMENT DETAILS (P5, P10 & P26) - 1 OF 2
(INITIAL STAGE)

SHEET NO. : B8A-47

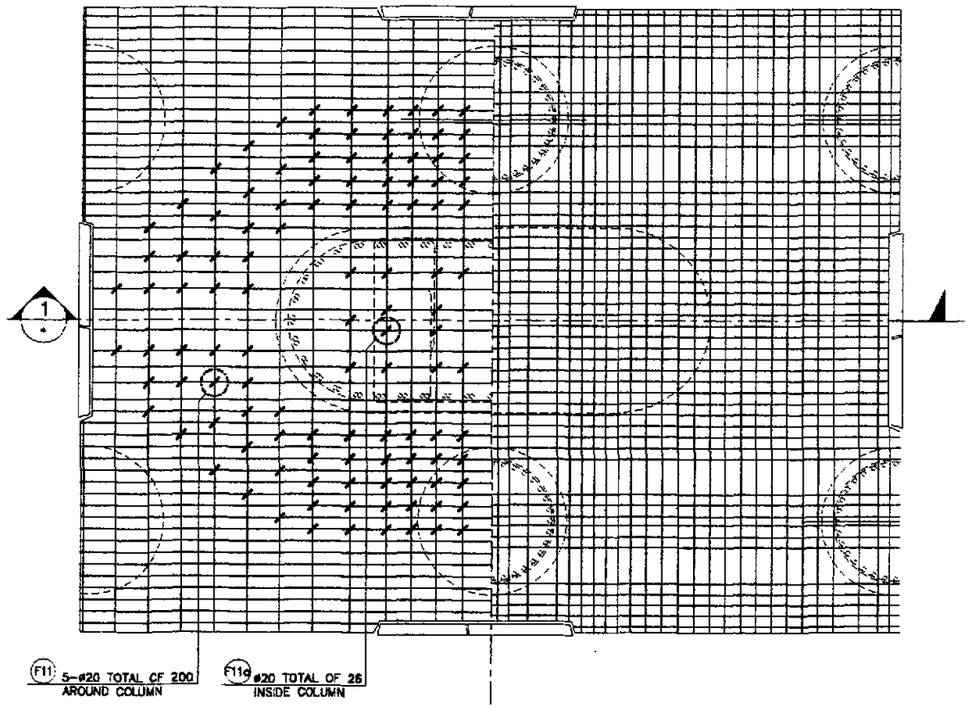

A PLAN
SCALE 1:25

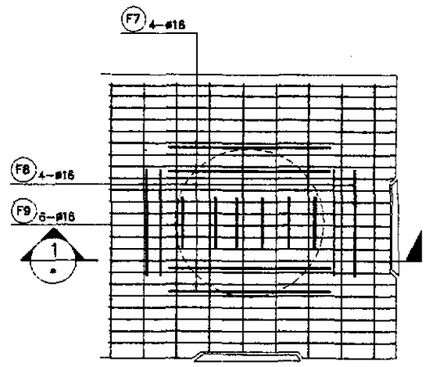

TYPICAL ON PILE-PILECAP CONNECTION

B PLAN
SCALE 1:25

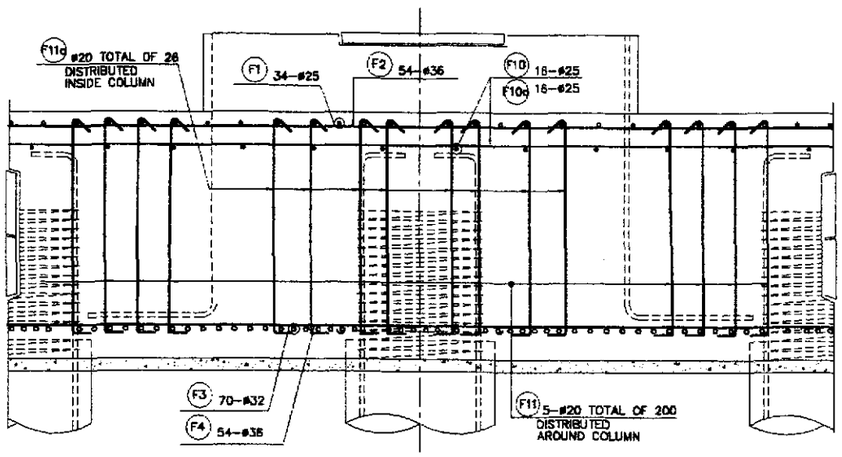

1 SECTION
SCALE 1:25

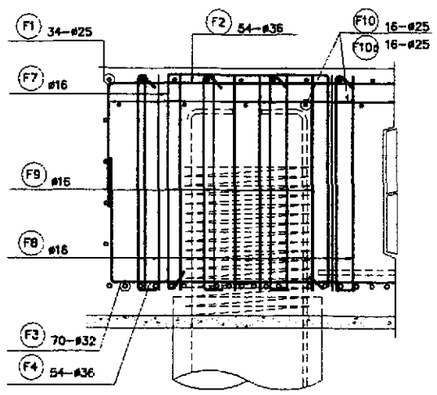

2 SECTION
SCALE 1:25

BAR BENDING DIAGRAM

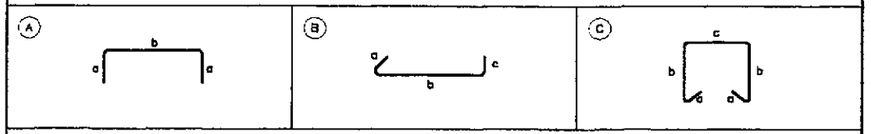

SCHEDULE OF REINFORCEMENT

LOCATION	BAR MARK	SIZE (mm)	BEND TYPE	DIMENSION(mm) OUT TO OUT a	b	c	d	e	f	LENGTH (mm)	NO. REQ'D.	UNIT WEIGHT (kg/m)	WEIGHT (kg) GRADE 40	GRADE 60
P5, P10 & P26	F1	25	A	1000	5500					7500	34	3.853		982.52
	F2	36	A	1000	8750					10750	54	7.99		4638.20
	F3	32	A	1000	5500					7500	70	6.313		3314.33
	F4	36	A	1000	8750					10750	54	7.99		4638.20
	F5	25	A	330	5500					6160	8	3.853		189.68
	F5a	25	A	330	8750					9410	8	3.853		290.05
	F6	25	B	265	1700	335				2300	216	2.466		1225.11
	F7	16	C	175	1700	1300				5050	24	1.578	191.25	
	F8	16	C	175	1700	800				4550	24	1.578	172.32	
	F9	16	C	175	1700	400				4150	24	1.578	157.17	
	F10	25	STR	8750						8750	16	3.853		539.42
	F10a	25	STR	5500						5500	16	3.853		339.06
	F11	20	B	330	1700	335				2365	200	2.466		1166.42
	F11a	20	B	330	1700	335				2365	26	2.466		151.63
										TOTAL WEIGHT PER PIER		= 520.74		17,474.82
										GRAND TOTAL WEIGHT (3) PIERS		= 1,562.22		52,424.46

THE REINFORCEMENT SHOWN ON THIS TABLE IS FOR REFERENCE ONLY. THE CONTRACTOR SHOULD CHECK AND VERIFY ALL DIMENSIONS, SIZES AND QUANTITIES OF REINFORCEMENT.

1 PILECAP REINFORCEMENT DETAILS (P5, P10 & P26)
SCALE AS SHOWN

JICA
JAPAN INTERNATIONAL COOPERATION AGENCY
KEI KATAHIRA & ENGINEERS INTERNATIONAL
YEC YACHIYO ENGINEERING CO., LTD.

	DATE	SIGNATURE
DESIGNED	9/21/02	M. S. NAVAL
CHECKED	9/23/02	J. P. SANTOS
SUBMITTED	10/14/02	M. [illegible] TEAM LEADER

REPUBLIC OF THE PHILIPPINES
DEPARTMENT OF PUBLIC WORKS AND HIGHWAYS

PUHL – PMO	BUREAU OF DESIGN		OFFICE OF THE SECRETARY	
Submitted By:	Reviewed By:	Recommended By:	Recommended By: (See cover sheet for Signature)	Approved By: (See cover sheet for Signature/Approval)
DANILO C. TRAJANO, Project Director	ADRIANO M. DOROY, Chief, Bridges Division	GILBERTO S. REYES, Director IV (OIC)	MANUEL M. BONGAO, Undersecretary	SIMEON A. DATUMANONG, Secretary

PROJECT AND LOCATION :
THE DETAILED DESIGN STUDY ON UPGRADING INTER-URBAN HIGHWAY SYSTEM ALONG THE PAN-PHILIPPINE HIGHWAY (Plaridel, Cabanatuan and San Jose Bypasses)
PLARIDEL BYPASS - CONTRACT PACKAGE III

SCALE : AS SHOWN
FULL SIZE A1

SHEET CONTENTS :
BRIDGE NO. 8 ANGAT RIVER BRIDGE
PILE CAP REINFORCEMENT DETAILS (P5, P10 & P26) - 2 OF 2
(INITIAL STAGE)

SHEET NO. : B8A-48

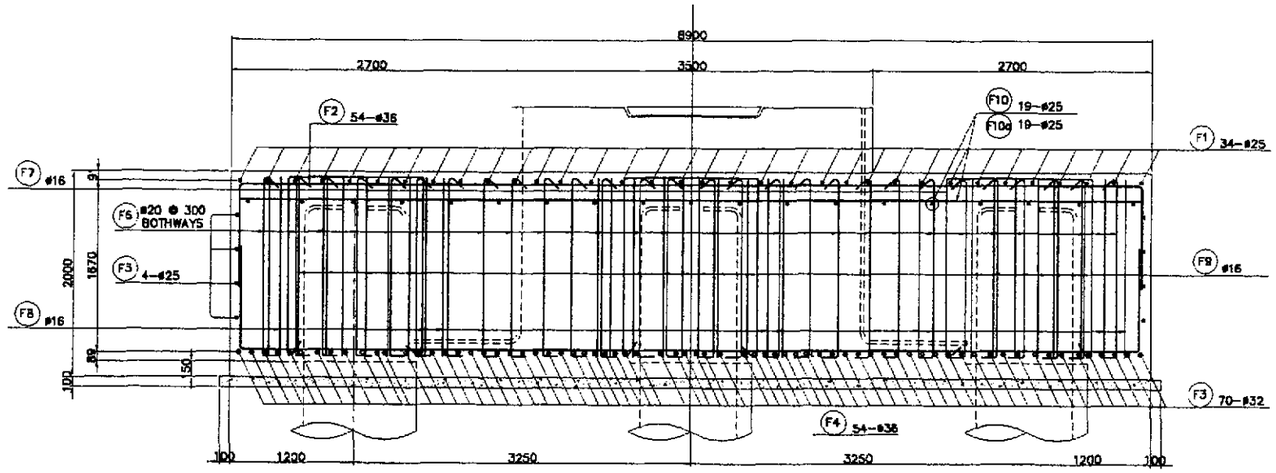

B SECTION
SCALE 1:30

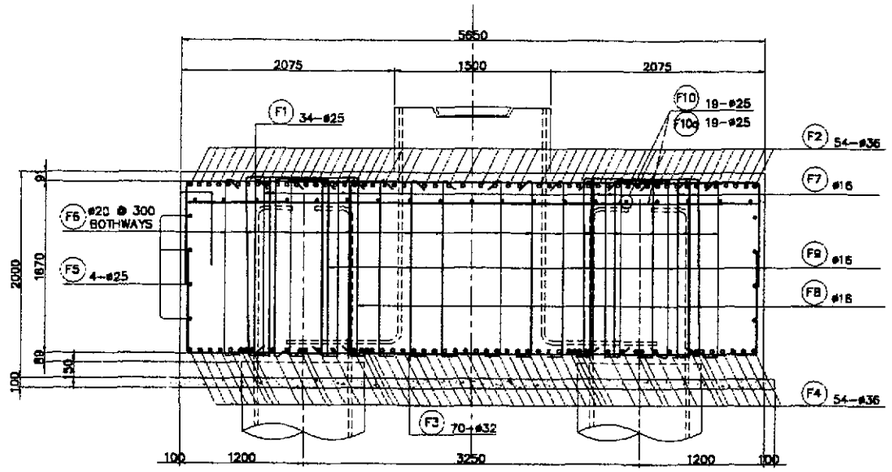

C SECTION
SCALE 1:30

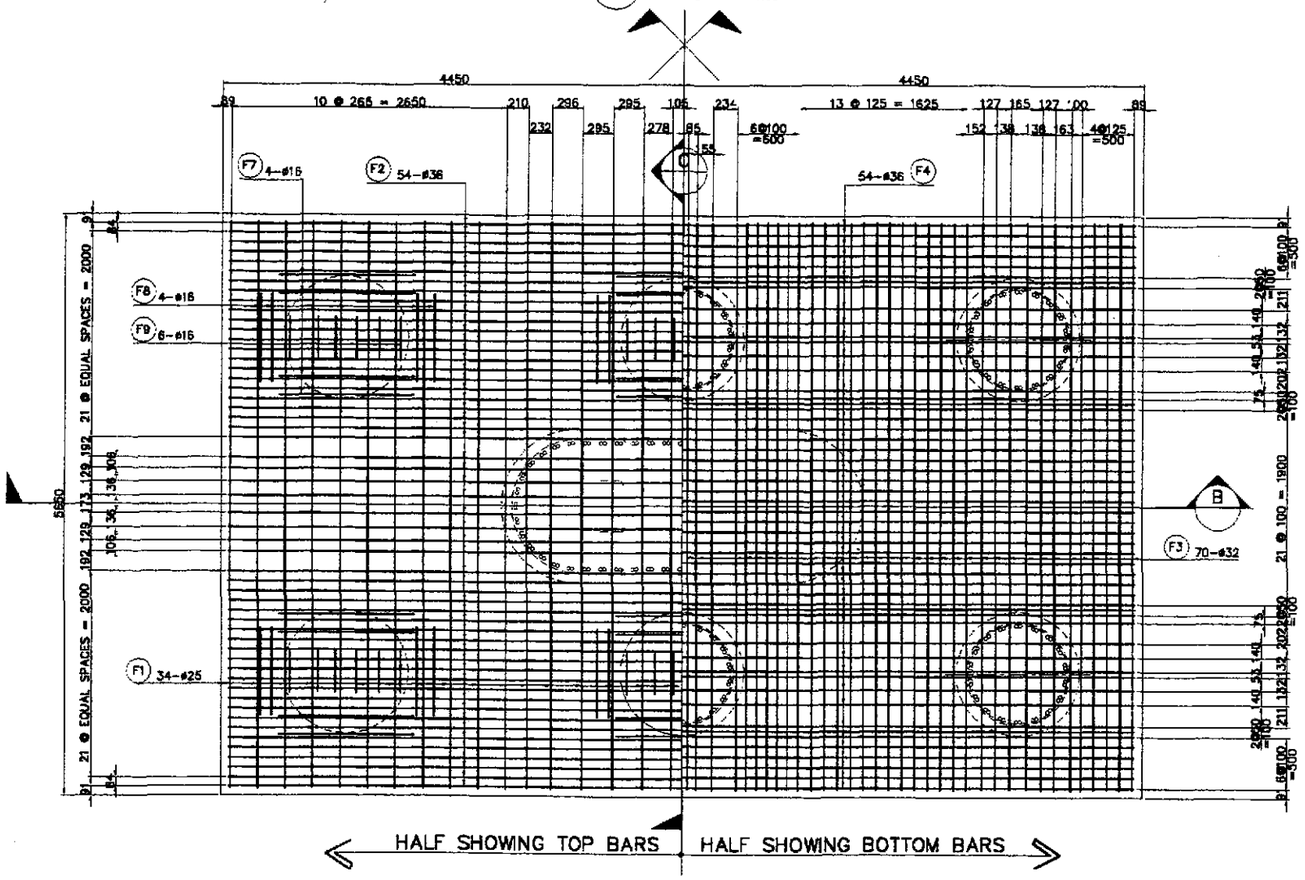

A PLAN
SCALE 1:30

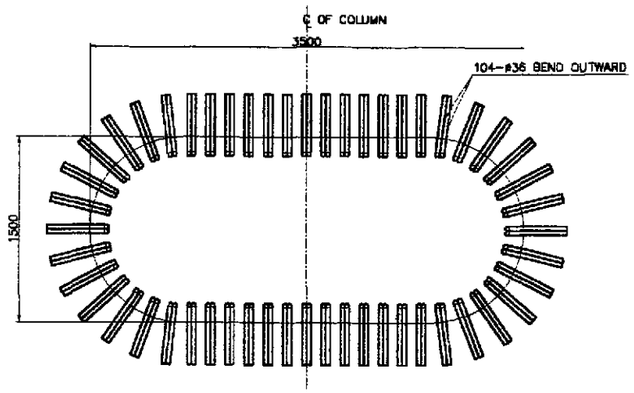

B DETAIL OF COLUMN MAIN BAR ARRANGEMENT @ BOTTOM
SCALE 1:25

1 PILECAP REINFORCEMENT DETAILS (P1, P2, P3, P4, P6, P7, P8,P9, P11, P12, P13, P22, P23, P24, P25, P27, P28 & P29)
SCALE AS SHOWN

JICA
JAPAN INTERNATIONAL COOPERATION AGENCY
KATAHIRA & ENGINEERS INTERNATIONAL
YACHIYO ENGINEERING CO., LTD.

	DATE	SIGNATURE
DESIGNED	9/6/02	M. S. NAVAL
CHECKED	9/23/02	J. SANTOS
SUBMITTED	10/14/02	TEAM LEADER

REPUBLIC OF THE PHILIPPINES
DEPARTMENT OF PUBLIC WORKS AND HIGHWAYS

PUH-L – PMO	BUREAU OF DESIGN		OFFICE OF THE SECRETARY	
Submitted By:	Reviewed By:	Recommended By:	Recommended By: (See cover sheet for Signature)	Approved By: (See cover sheet for Signature/Approval)
DANILO C. TRAJANO	ADRIANO M. DOROY	GILBERTO S. REYES	MANUEL M. BONDAK	SIMEON A. DATUMANONG
Project Director	Chief, Bridges Division	Director IV (OIC)	Undersecretary	Secretary

PROJECT AND LOCATION :
THE DETAILED DESIGN STUDY ON UPGRADING INTER-URBAN HIGHWAY SYSTEM ALONG THE PAN-PHILIPPINE HIGHWAY (Plaridel, Cabanatuan and San Jose Bypasses)
PLARIDEL BYPASS - CONTRACT PACKAGE III

SCALE : AS SHOWN
FULL SIZE A1

SHEET CONTENTS :
BRIDGE NO. 8 ANGAT RIVER BRIDGE
PILE CAP REINF. DETAILS (P1-P4,P6-P9, P11-P13,P22-P25 & P27-P29) - 1 OF 2
(INITIAL STAGE)

SHEET NO. : B8A-49

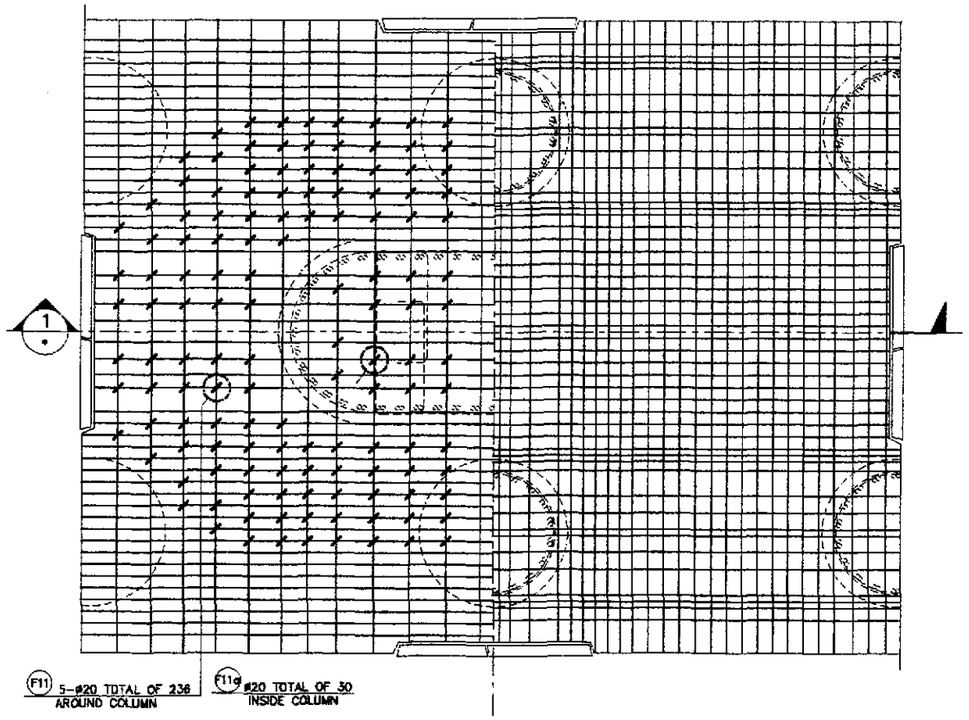

A PLAN
SCALE 1:25

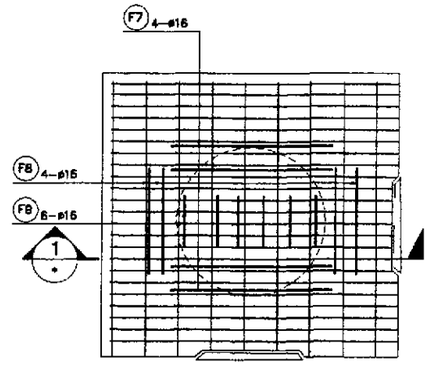

TYPICAL ON PILE-PILECAP CONNECTION

B PLAN
SCALE 1:25

BAR BENDING DIAGRAM

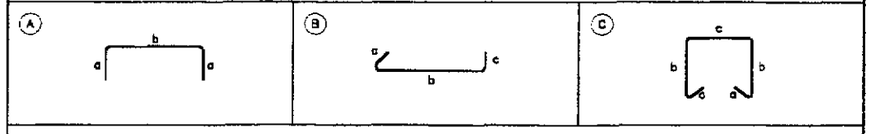

SCHEDULE OF REINFORCEMENT

LOCATION	BAR MARK	SIZE (mm)	BEND TYPE	DIMENSION(mm) OUT TO OUT a	b	c	d	e	f	LENGTH (mm)	NO. REQ'D.	UNIT WEIGHT (kg/m)	WEIGHT (kg) GRADE 40	GRADE 60
P1, P2, P3, P4, P6, P7, P8, P9, P11, P12, P13, P22, P23, P24, P25, P27, P28 & P29	F1	25	A	1000	5500					7500	34	3.853		982.52
	F2	36	A	1000	8750					10750	54	7.99		4638.20
	F3	32	A	1000	5500					7500	70	6.313		3314.33
	F4	36	A	1000	8750					10750	54	7.99		4638.20
	F5	25	A	330	5500					6160	8	3.853		189.88
	F5a	25	A	330	8750					9410	8	3.853		290.05
	F6	25	B	265	1700	335				2300	216	2.466		1225.11
	F7	16	C	175	1700	1300				5050	24	1.578	191.25	
	F8	16	C	175	1700	800				4550	24	1.578	172.32	
	F9	16	C	175	1700	400				4150	24	1.578	157.17	
	F10	25	STR	8750						8750	19	3.853		640.56
	F10a	25	STR	5500						5500	19	3.853		402.64
	F11	20	B	330	1700	335				2365	236	2.466		1376.37
	F11a	20	B	330	1700	335				2365	30	2.466		174.96
										TOTAL WEIGHT PER PIER =			520.74	17,872.82
										GRAND TOTAL WEIGHT (16) PIERS =			8,373.32	321,710.76

THE REINFORCEMENT SHOWN ON THIS TABLE IS FOR REFERENCE ONLY. THE CONTRACTOR SHOULD CHECK AND VERIFY ALL DIMENSIONS, SIZES AND QUANTITIES OF REINFORCEMENT.

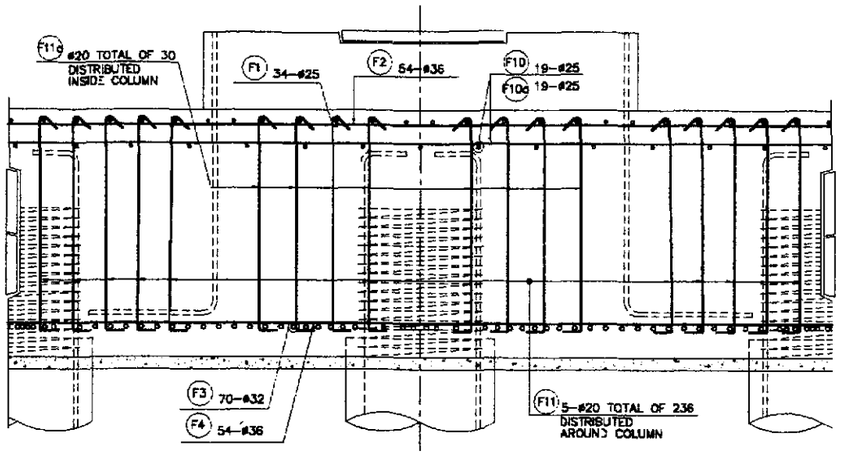

1 SECTION
SCALE 1:25

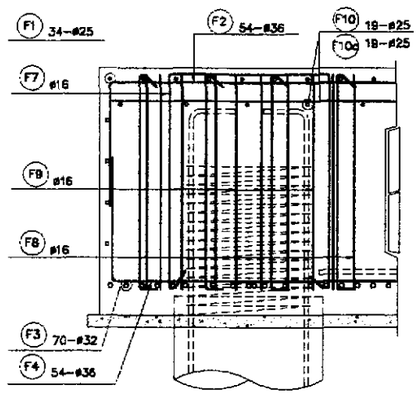

2 SECTION
SCALE 1:25

1 PILECAP REINFORCEMENT DETAILS (P1, P2, P3, P4, P6, P7, P8,P9, P11, P12, P13, P22, P23, P24, P25, P27, P28 & P29)
SCALE AS SHOWN

JICA
JAPAN INTERNATIONAL COOPERATION AGENCY
KEI KATAHIRA & ENGINEERS INTERNATIONAL
YEC YACHIYO ENGINEERING CO., LTD.

	DATE	SIGNATURE
DESIGNED	7/21/02	M. S. NAVAL
CHECKED	7/23/02	J. E. SANTOS
SUBMITTED	10/14/02	TEAM LEADER

REPUBLIC OF THE PHILIPPINES
DEPARTMENT OF PUBLIC WORKS AND HIGHWAYS

PJHL - PMO	BUREAU OF DESIGN		OFFICE OF THE SECRETARY	
Submitted By:	Reviewed By:	Recommended By:	Recommended By: (See cover sheet for Signature)	Approved By: (See cover sheet for Signature/Approval)
DANILO C. TRAJANO, Project Director	ADRIANO M. DOROY, Chief, Bridges Division	GILBERTO S. REYES, Director IV (OIC)	MANUEL M. BONOAN, Undersecretary	SIMEON A. DATUMANONG, Secretary

PROJECT AND LOCATION :
THE DETAILED DESIGN STUDY ON UPGRADING INTER-URBAN HIGHWAY SYSTEM ALONG THE PAN-PHILIPPINE HIGHWAY (Plaridel, Cabanatuan and San Jose Bypasses)
PLARIDEL BYPASS - CONTRACT PACKAGE III

SCALE : AS SHOWN
FULL SIZE A1

SHEET CONTENTS :
BRIDGE NO. 8 ANGAT RIVER BRIDGE
PILE CAP REINF. DETAILS (P1-P4,P6-P9, P11-P13,P22-P25 & P27-P29) - 2 OF 2
(INITIAL STAGE)

SHEET NO. : B8A-50

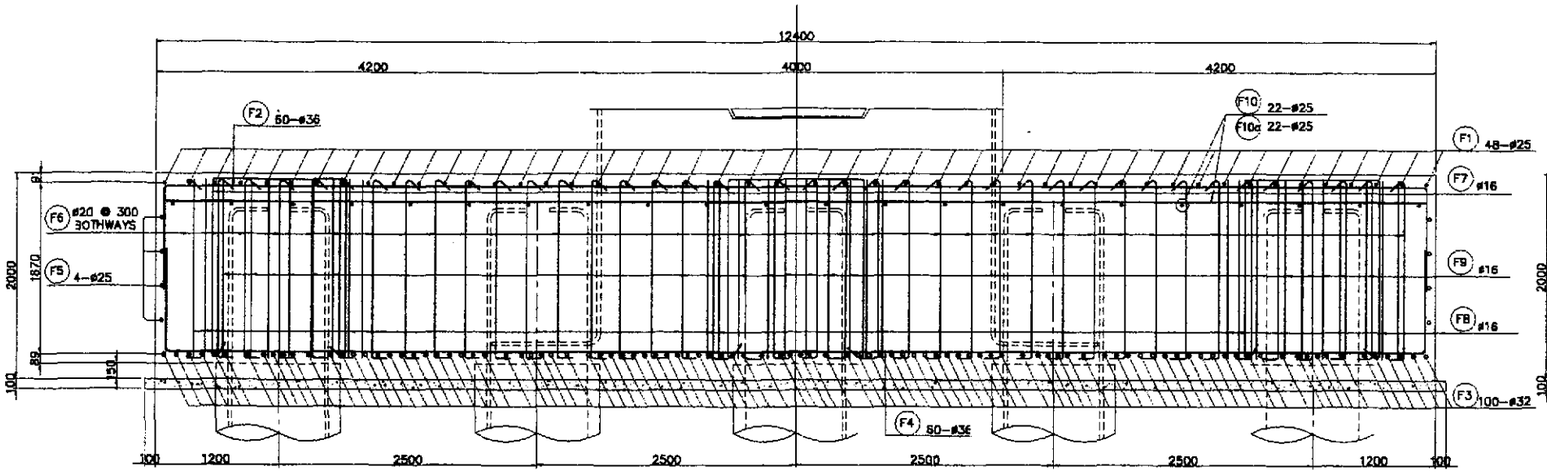

B SECTION
SCALE 1:30

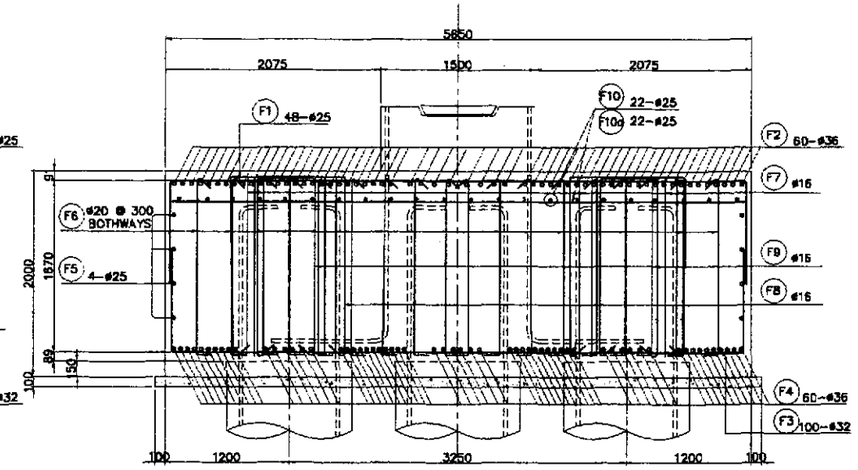

C SECTION
SCALE 1:30

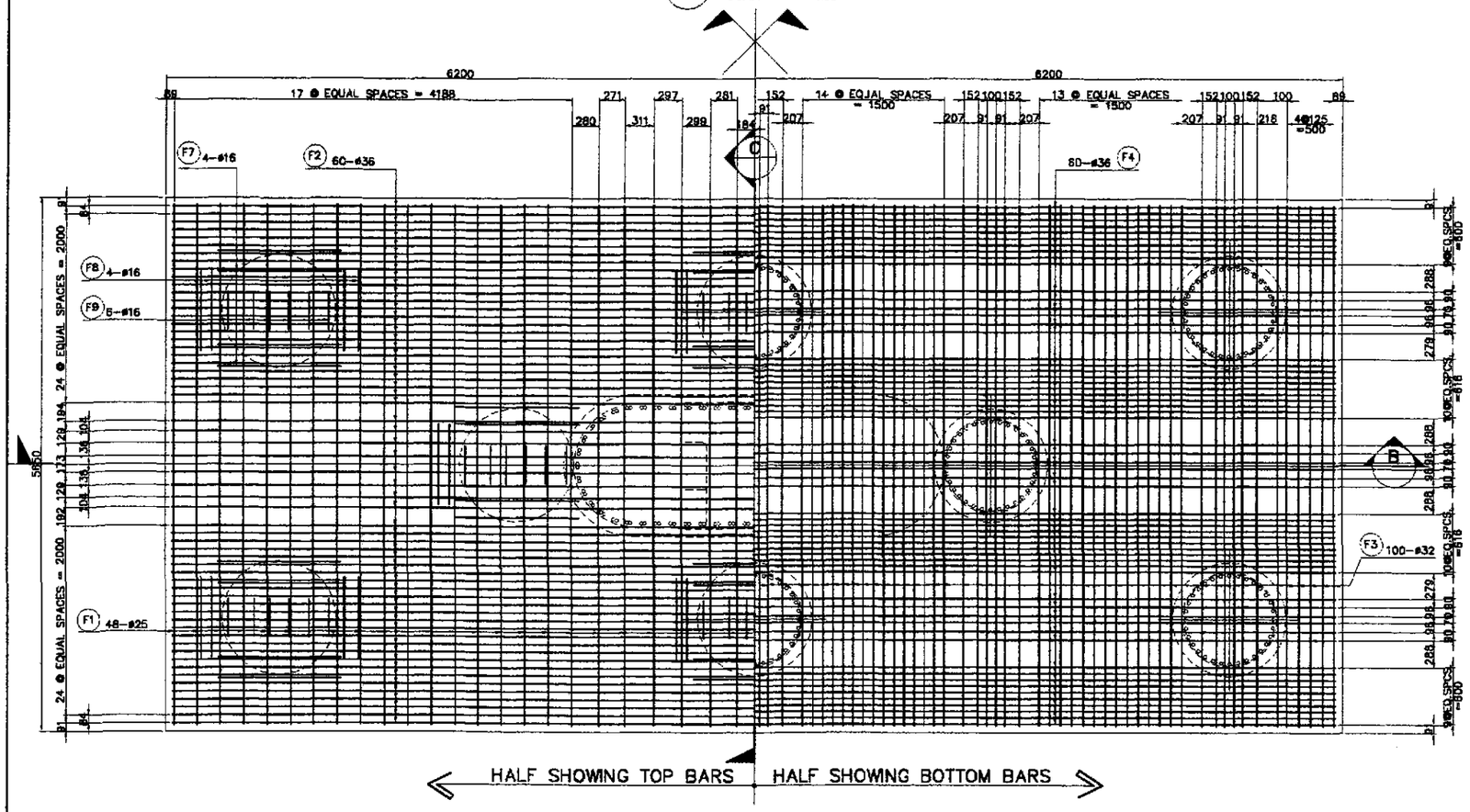

A PLAN
SCALE 1:30

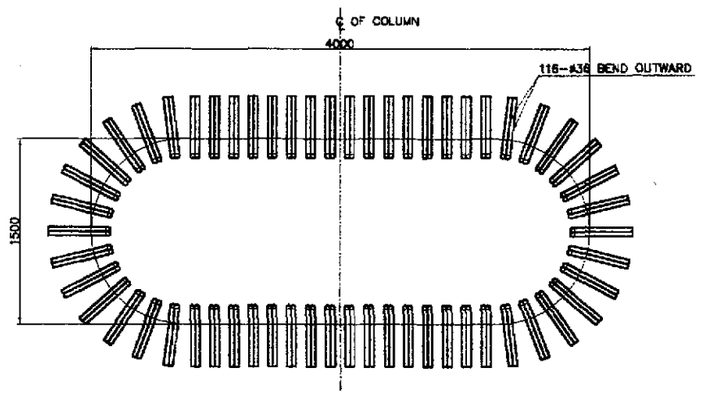

B DETAIL OF COLUMN MAIN BAR ARRANGEMENT @ BOTTOM
SCALE 1 : 25

1 PILECAP REINFORCEMENT DETAILS (P30)
SCALE AS SHOWN

JICA
JAPAN INTERNATIONAL COOPERATION AGENCY
KATAHIRA & ENGINEERS INTERNATIONAL
YACHIYO ENGINEERING CO., LTD.

	DATE	SIGNATURE
DESIGNED	9/21/02	M. S. NAWAR
CHECKED	9/25/02	J. C. SANTOS
SUBMITTED	10/14/02	M. Ruiz TEAM LEADER

REPUBLIC OF THE PHILIPPINES
DEPARTMENT OF PUBLIC WORKS AND HIGHWAYS

PJHL – PMO	BUREAU OF DESIGN		OFFICE OF THE SECRETARY	
Submitted By:	Reviewed By:	Recommended By:	Recommended By: (See cover sheet for Signature)	Approved By: (See cover sheet for Signature/Approval)
DANILO C. TRAJANO, Project Director	ADRIANO M. DOROY, Chief, Bridges Division	GILBERTO S. REYES, Director IV (OIC)	MANUEL M. BONOAN, Undersecretary	SIMEON A. DATUMANONG, Secretary

PROJECT AND LOCATION :
THE DETAILED DESIGN STUDY ON UPGRADING INTER-URBAN HIGHWAY SYSTEM ALONG THE PAN-PHILIPPINE HIGHWAY (Plaridel, Cabanatuan and San Jose Bypasses)
PLARIDEL BYPASS - CONTRACT PACKAGE III

SCALE : AS SHOWN
FULL SIZE A1

SHEET CONTENTS :
BRIDGE NO. 8 ANGAT RIVER BRIDGE
PILE CAP REINFORCEMENT DETAILS (PIER 30) - 1 OF 2
(INITIAL STAGE)

SHEET NO. : B8A-51

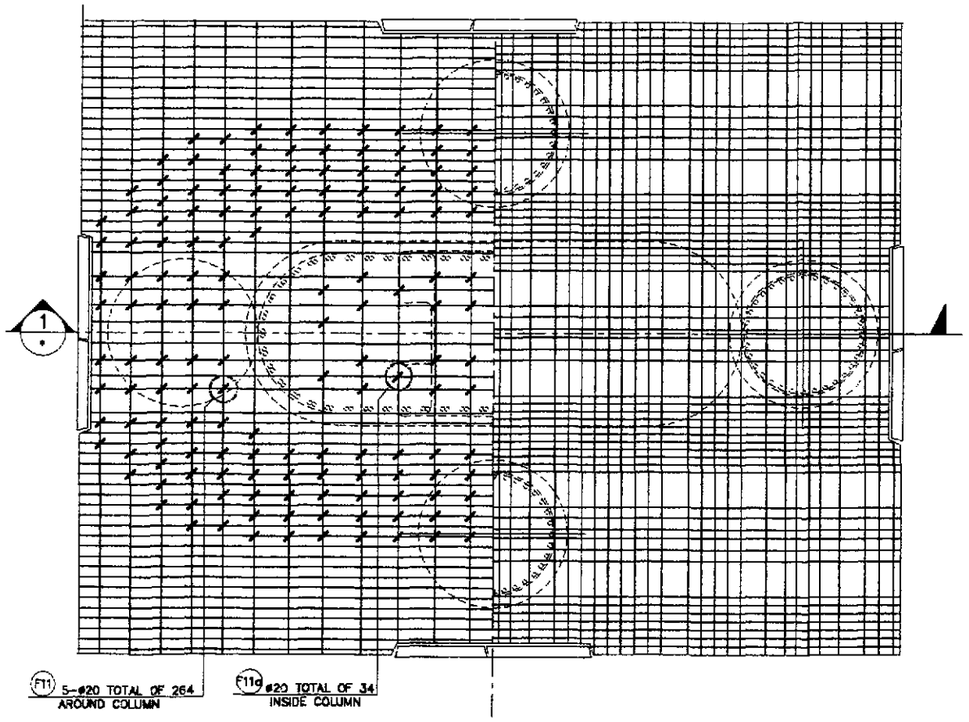

A PLAN
SCALE 1:25

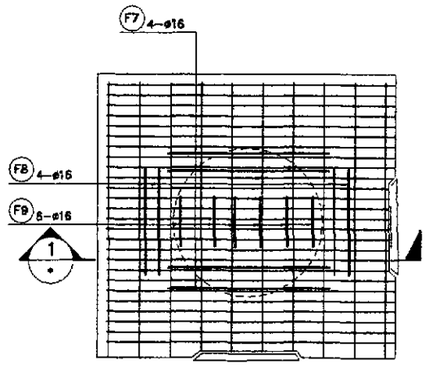

TYPICAL ON PILE-PILECAP CONNECTION

B PLAN
SCALE 1:25

BAR BENDING DIAGRAM

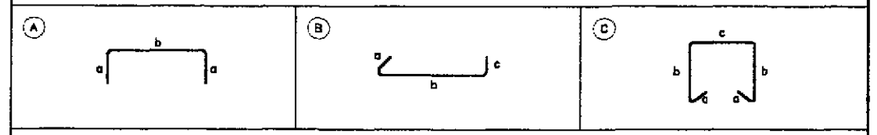

SCHEDULE OF REINFORCEMENT

LOCATION	BAR MARK	SIZE (mm)	BEND TYPE	DIMENSION(mm) OUT TO OUT a	b	c	d	e	f	LENGTH (mm)	NO. REQ'D.	UNIT WEIGHT (kg/m)	WEIGHT (kg) GRADE 40	GRADE 60
P30	F1	25	A	1000	5500					7500	48	3.853		1387.08
	F2	36	A	1000	12250					14250	60	7.99		6831.45
	F3	32	A	1000	5500					7500	100	6.313		4734.75
	F4	36	A	1000	12250					14250	60	7.99		6831.45
	F5	25	A	330	5500					6160	8	3.853		189.88
	F5a	25	A	330	12250					12910	8	3.853		397.94
	F6	25	B	265	1700	335				2300	300	2.466		1701.54
	F7	16	C	175	1700	1300				5050	32	1.578	255.00	
	F8	16	C	175	1700	800				4550	32	1.578	229.76	
	F9	16	C	175	1700	400				4150	32	1.578	209.56	
	F10	25	STR	12250						12250	22	3.853		1038.38
	F10a	25	STR	5500						5500	22	3.853		466.21
	F11	20	B	330	1700	335				2365	264	2.466		1539.67
	F11a	20	B	330	1700	335				2365	34	2.466		198.29
											TOTAL WEIGHT =		684.32	25,316.84

THE REINFORCEMENT SHOWN ON THIS TABLE IS FOR REFERENCE ONLY. THE CONTRACTOR SHOULD CHECK AND VERIFY ALL DIMENSIONS, SIZES AND QUANTITIES OF REINFORCEMENT.

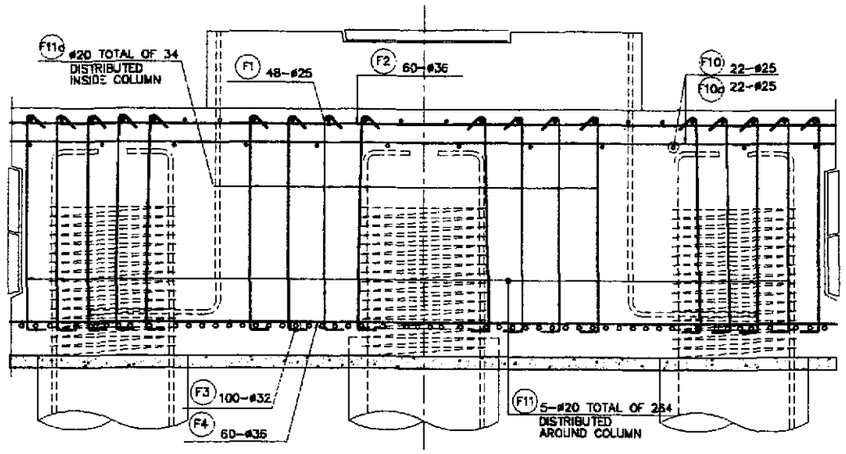

1 SECTION
SCALE 1:25

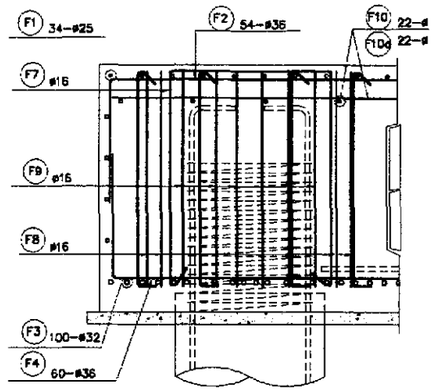

2 SECTION
SCALE 1:25

1 PILECAP REINFORCEMENT DETAILS (P30)
SCALE AS SHOWN

JICA JAPAN INTERNATIONAL COOPERATION AGENCY; KEI KATAHIRA & ENGINEERS INTERNATIONAL; YEC YACHIYO ENGINEERING CO., LTD.		DATE	SIGNATURE	REPUBLIC OF THE PHILIPPINES DEPARTMENT OF PUBLIC WORKS AND HIGHWAYS	PROJECT AND LOCATION :	SCALE :	SHEET CONTENTS :	SHEET NO. :
	DESIGNED	9/21/02		PJHL – PMO: Submitted By: DANILO C. TRAJANO, Project Director	THE DETAILED DESIGN STUDY ON UPGRADING INTER-URBAN HIGHWAY SYSTEM ALONG THE PAN-PHILIPPINE HIGHWAY (Plaridel, Cabanatuan and San Jose Bypasses)	AS SHOWN	BRIDGE NO. 8 ANGAT RIVER BRIDGE PILE CAP REINFORCEMENT DETAILS (PIER 30) - 2 OF 2 (INITIAL STAGE)	B8A-52
	CHECKED	9/23/02		BUREAU OF DESIGN: Reviewed By: ADRIANO M. DORDY, Chief, Bridges Division; Recommended By: GILBERTO S. REYES, Director IV (OIC)				
	SUBMITTED	10/14/02	TEAM LEADER	OFFICE OF THE SECRETARY: Recommended By: (See cover sheet for Signature) MANUEL M. BONDAN, Undersecretary; Approved By: (See cover sheet for Signature/Approval) SIMEON A. DATUMANONG, Secretary	PLARIDEL BYPASS - CONTRACT PACKAGE III	FULL SIZE A1		

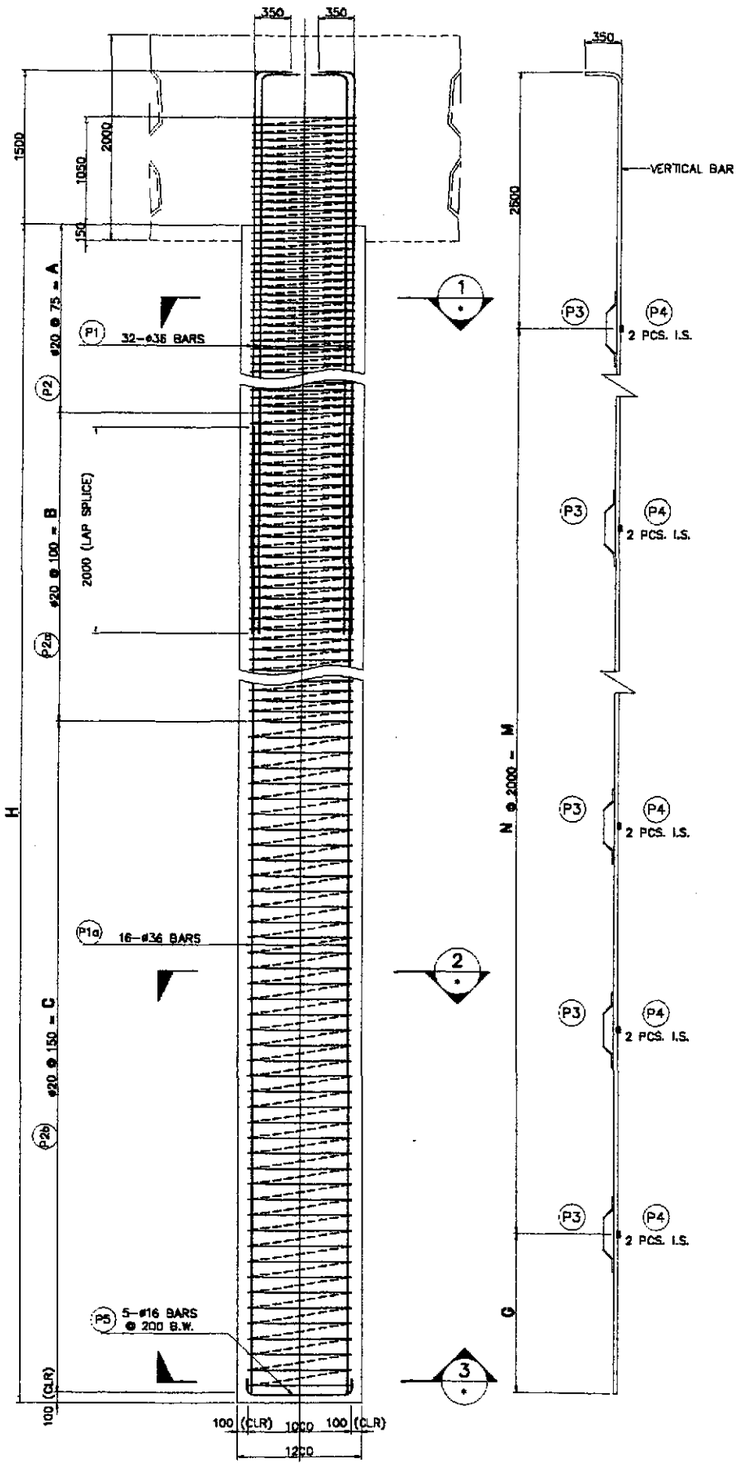

A ELEVATION
SCALE 1:30

B LAYOUT OF STIFFENER
SCALE 1:30

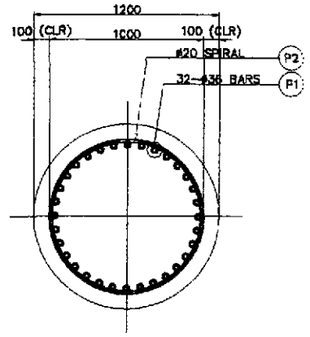

1 SECTION
SCALE 1:20

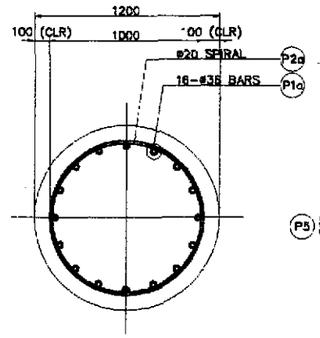

2 SECTION
SCALE 1:20

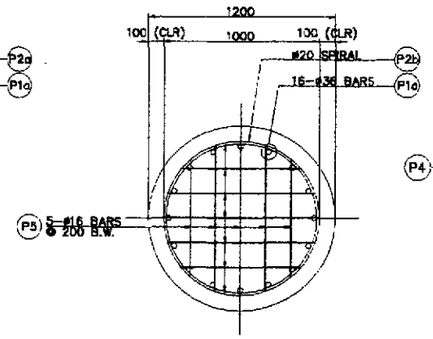

3 SECTION
SCALE 1:20

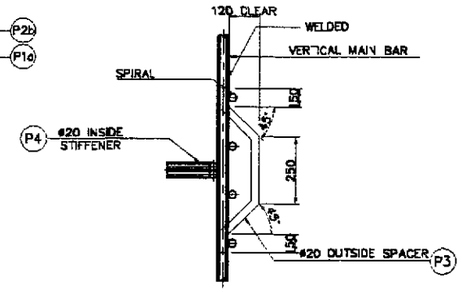

E DETAIL OF STIFFENER/SPACER
NOT TO SCALE

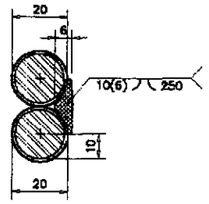

DOUBLE FLARED-V-GROOVE WELD
SECTION - D1

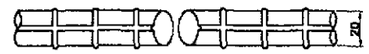

PLAN (BARS BEFORE WELDING)

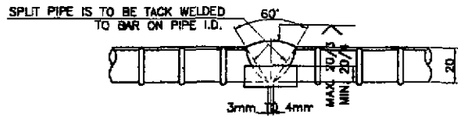

DETAILS OF SINGLE-V-GROOVE BUTT WELD

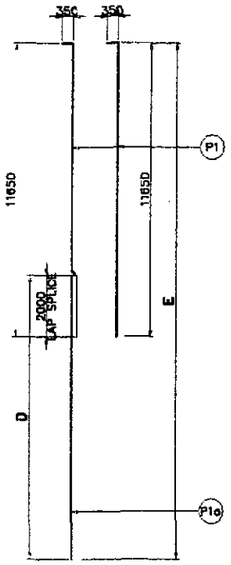

C SCHEMATIC DETAIL
NOT TO SCALE

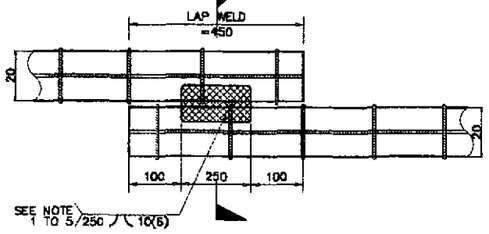

DIRECT LAP JOINT WITH BARS IN CONTACT

D DETAILS OF SPIRAL REINF. FULL LAP-WELD CONNECTION
NOT TO SCALE

NOTES ON LAP WELD CONNECTION

1. TIES REINFORCEMENT ARE LAP-WELD CONNECTED (FLARED-V-GROOVE TYPE).
2. WELDING SHOULD CONFORM TO ANSI/AWS D1.4-92 "STRUCTURAL WELDING CODE REINFORCEMENT STEEL".
3. USE ELECTRODE E90XX-X.
4. CARE SHOULD BE TAKEN NOT TO DAMAGE THE BORED PILE MAIN BARS DURING WELDING.
5. SPIRAL REINFORCEMENT SHOULD BE BUTT WELDED WHERE SPIRAL PITCH IS 75mm. OTHERWISE, USE LAP WELD SPLICE.

SCHEDULE OF DIMENSIONS

PIER	H (mm)	A (mm)	B (mm)	C (mm)	D (mm)	E (mm)	G (mm)	N	M (mm)
P5 & P10	20000	4000	6200	9600	11750	21400	900	9	18000
P26 & P30	18000	4000	6200	7650	9750	19400	900	8	16000

BAR BENDING DIAGRAM

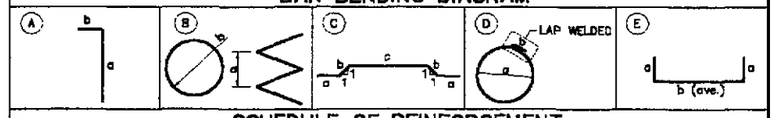

SCHEDULE OF REINFORCEMENT

LOCATION	BAR MARK	SIZE (mm)	BEND TYPE	DIMENSION(mm) OUT TO OUT a	b	c	d	LENGTH (mm)	NO. REQ'D.	UNIT WEIGHT (kg/m)	WEIGHT (kg) GRADE 40	GRADE 60
PIER P5 & P10 DIA. = 1200 L = 20000	P1	36	A	11650	350			12000	32	7.991		3068.16
	P1a	36	STR	11750				11750	16	7.991		1502.12
	P2	20	B	75	980			170749	–	2.466		421.07
	P2a	20	B	100	980			198483	–	2.466		489.46
	P2b	20	B	150	980			205275	–	2.466		506.21
	P3	20	C	150	170	250		890	80	2.466		175.58
	P4	20	D	868	500			3227	20	2.466		159.15
	P5	16	E	150	845			1145	10	1.579	18.07	
								TOTAL WEIGHT PER PILE		=	18.07	8,321.74
								TOTAL WEIGHT FOR P5		=	108.41	37,930.47
								TOTAL WEIGHT FOR P10		=	108.41	37,930.47
PIER P26&P30 DIA. = 1200 L = 18000	P1	36	A	11650	350			12000	32	7.991		3068.16
	P1a	36	STR	9750				9750	16	7.991		1246.44
	P2	20	B	75	980			170749	–	2.466		421.07
	P2a	20	B	100	980			198483	–	2.466		489.46
	P2b	20	B	150	980			163703	–	2.466		403.69
	P3	20	C	150	170	250		890	72	2.466		158.02
	P4	20	D	868	500			3227	18	2.466		143.24
	P5	16	E	150	845			1145	10	1.579	18.07	
								TOTAL WEIGHT PER PILE		=	18.07	5,930.07
								TOTAL WEIGHT FOR P26		=	108.41	35,580.45
								TOTAL WEIGHT FOR P30		=	144.54	47,440.60

THE REINFORCEMENT SHOWN ON THIS TABLE IS FOR REFERENCE ONLY. THE CONTRACTOR SHOULD CHECK AND VERIFY ALL DIMENSIONS, SIZES AND QUANTITIES OF REINFORCEMENT.

JICA
JAPAN INTERNATIONAL COOPERATION AGENCY
KEI KATAHIRA & ENGINEERS INTERNATIONAL
YEC YACHIYO ENGINEERING CO., LTD.

	DATE	SIGNATURE
DESIGNED	9/21/02	M. S. NAVAL
CHECKED	9/23/02	J. Z. TORRES
SUBMITTED	10/14/02	M. UMENDA TEAM LEADER

REPUBLIC OF THE PHILIPPINES
DEPARTMENT OF PUBLIC WORKS AND HIGHWAYS

FUHL - PMO	BUREAU OF DESIGN		OFFICE OF THE SECRETARY	
Submitted By:	Reviewed By:	Recommended By:	Recommended By: (See cover sheet for Signature)	Approved By: (See cover sheet for Signature/Approval)
DANILO C. TRAJANO	ADRIANO M. DOROY	GILBERTO S. REYES	MANUEL M. BONDAN	SIMEON A. DATUMANONG
Project Director	Chief, Bridges Division	Director IV (OIC)	Undersecretary	Secretary

PROJECT AND LOCATION :
THE DETAILED DESIGN STUDY ON UPGRADING INTER-URBAN HIGHWAY SYSTEM ALONG THE PAN-PHILIPPINE HIGHWAY (Plaridel, Cabanatuan and San Jose Bypasses)
PLARIDEL BYPASS - CONTRACT PACKAGE III

SCALE :
AS SHOWN
FULL SIZE A1

SHEET CONTENTS :
BRIDGE NO. 8 ANGAT RIVER BRIDGE
BORED PILE REINFORCEMENT DETAILS (P5, P10, P26 & P30)
(INITIAL STAGE)

SHEET NO. :
B8A-53

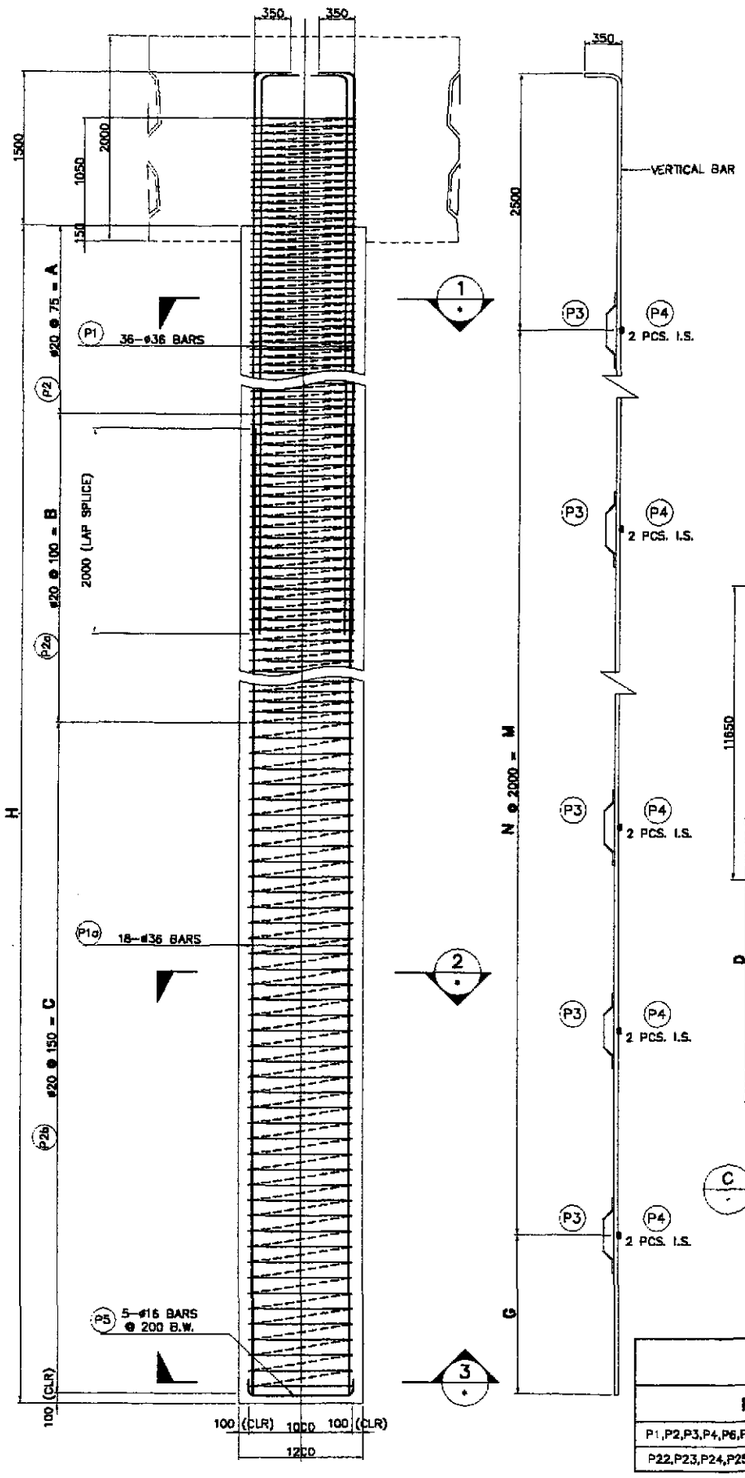

A SCHEMATIC DETAIL
NOT TO SCALE

A ELEVATION
SCALE 1:30

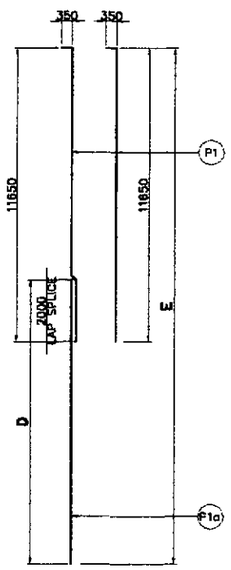

B LAYOUT OF STIFFENER
SCALE 1:30

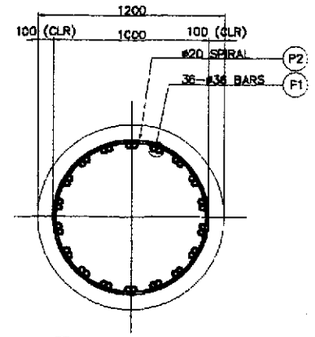

1 SECTION
SCALE 1:20

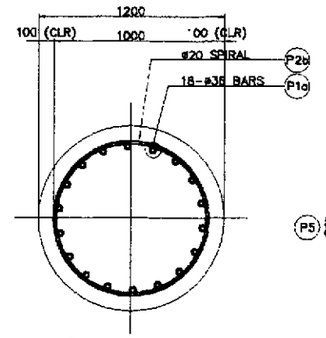

2 SECTION
SCALE 1:20

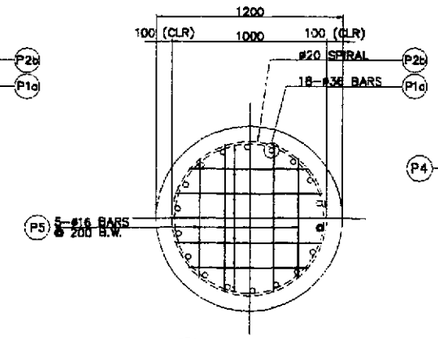

3 SECTION
SCALE 1:20

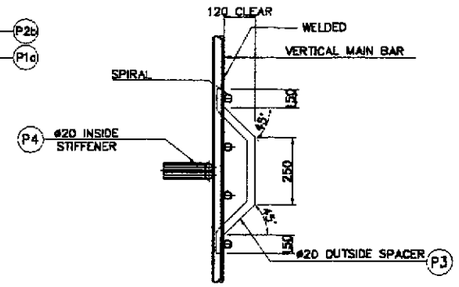

E DETAIL OF STIFFENER/SPACER
NOT TO SCALE

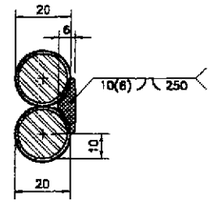

DOUBLE FLARED-V-GROOVE WELD
SECTION - D1

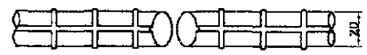

PLAN (BARS BEFORE WELDING)

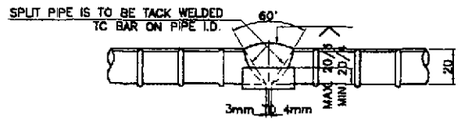

DETAILS OF SINGLE-V-GROOVE BUTT WELD

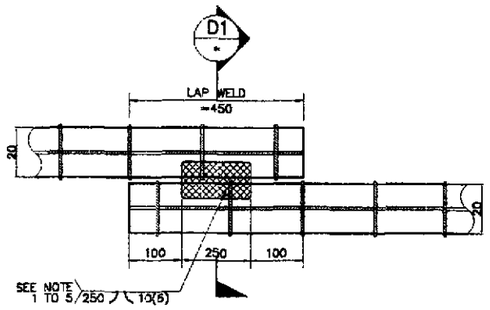

DIRECT LAP JOINT WITH BARS IN CONTACT

D DETAILS OF SPIRAL REINF. FULL LAP-WELD CONNECTION
NOT TO SCALE

NOTES ON LAP WELD CONNECTION

1. TIES REINFORCEMENT ARE LAP-WELD CONNECTED (FLARED-V-GROOVE TYPE).
2. WELDING SHOULD CONFORM TO ANSI/AWS D1.4-92 "STRUCTURAL WELDING CODE REINFORCEMENT STEEL".
3. USE ELECTRODE E90XX-X.
4. CARE SHOULD BE TAKEN NOT TO DAMAGE THE BORED PILE MAIN BARS DURING WELDING.
5. SPIRAL REINFORCEMENT SHOULD BE BUTT WELDED WHERE SPIRAL PITCH IS 75mm. OTHERWISE, USE LAP WELD SPLICE.

SCHEDULE OF DIMENSIONS

PIER	H (mm)	A (mm)	B (mm)	C (mm)	D (mm)	E (mm)	G (mm)	N	M (mm)
P1,P2,P3,P4,P6,P7,P8,P9,P11,P12 & P13	20000	4000	6200	9600	11750	21400	900	9	18000
P22,P23,P24,P25,P27,P28 & P29	18000	4000	6200	7550	9750	19400	900	8	16000

BAR BENDING DIAGRAM

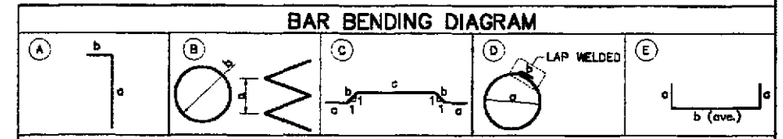

SCHEDULE OF REINFORCEMENT

LOCATION	BAR MARK	SIZE (mm)	BEND TYPE	DIMENSION(mm) OUT TO OUT a	b	c	d	LENGTH (mm)	NO. REQ'D.	UNIT WEIGHT (kg/m)	WEIGHT (kg) GRADE 40	GRADE 60
PIER P1,P2,P3,P4,P6,P7,P8,P9,P11,P12&P13 DIA. = 1200 L = 20000	P1	36	A	11650	350							
	P1a	36	STR	11750				12000	36	7.991		3451.68
	P2	20	B	75	960			11750	18	7.991		1689.89
	P2a	20	B	100	960			170749	–	2.466		421.07
	P2b	20	B	150	960			198483	–	2.466		489.46
	P3	20	C	150	170	250		205275	–	2.466		506.21
	P4	20	D	888	500			890	80	2.466		175.58
	P5	16	E	150	845			3227	20	2.466		159.15
								1145	10	1.578	18.07	
								TOTAL WEIGHT PER PILE =			18.07	6,893.03
								TOTAL WEIGHT PER PIER =			108.41	41,358.18
								TOTAL WEIGHT FOR (11) PIERS =			1192.51	854,939.8
PIER P22,P23,P24,P25,P27,P28&P29 DIA. = 1200 L = 18000	P1	36	A	11650	350			12000	36	7.991		3451.68
	P1a	36	A	9750				9750	18	7.991		1402.25
	P2	20	B	75	960			170749	–	2.466		421.07
	P2a	20	B	100	960			198483	–	2.466		489.46
	P2b	20	B	150	960			163703	–	2.466		403.69
	P3	20	C	150	170	250		890	72	2.466		158.02
	P4	20	D	888	500			3227	18	2.466		143.24
	P5	16	E	150	845			1145	10	1.578	18.07	
								TOTAL WEIGHT PER PILE =			18.07	6,489.40
								TOTAL WEIGHT PER PIER =			108.41	38,816.40
								TOTAL WEIGHT FOR (7) PIERS =			759.87	271,714.80

THE REINFORCEMENT SHOWN ON THIS TABLE IS FOR REFERENCE ONLY. THE CONTRACTOR SHOULD CHECK AND VERIFY ALL DIMENSIONS, SIZES AND QUANTITIES OF REINFORCEMENT.

JICA
JAPAN INTERNATIONAL COOPERATION AGENCY
KEI KATAHIRA & ENGINEERS INTERNATIONAL
YEC YACHIYO ENGINEERING CO., LTD.

	DATE	SIGNATURE
DESIGNED	9/21/02	
CHECKED	9/23/02	J. C. SANTOS
SUBMITTED	10/14/02	TEAM LEADER

REPUBLIC OF THE PHILIPPINES
DEPARTMENT OF PUBLIC WORKS AND HIGHWAYS

PUHL - PMO	BUREAU OF DESIGN		OFFICE OF THE SECRETARY	
Submitted By:	Reviewed By:	Recommended By:	Recommended By: (See cover sheet for Signature)	Approved By: (See cover sheet for Signature/Approval)
DANILO C. TRAJANO, Project Director	ADRIANO M. DOROY, Chief, Bridges Division	GILBERTO S. REYES, Director IV (OIC)	MANUEL M. BONDAN, Undersecretary	SIMEON A. DATUMANONG, Secretary

PROJECT AND LOCATION :
THE DETAILED DESIGN STUDY ON UPGRADING INTER-URBAN HIGHWAY SYSTEM ALONG THE PAN-PHILIPPINE HIGHWAY (Plaridel, Cabanatuan and San Jose Bypasses)
PLARIDEL BYPASS - CONTRACT PACKAGE III

SCALE : AS SHOWN
FULL SIZE A1

SHEET CONTENTS :
BRIDGE NO. 8 ANGAT RIVER BRIDGE
BORED PILE REINFORCEMENT DETAILS (P1-P4,P6-P9,P11-P13,P22-P25 & P27-P29) (INITIAL STAGE)

SHEET NO. : B8A-54

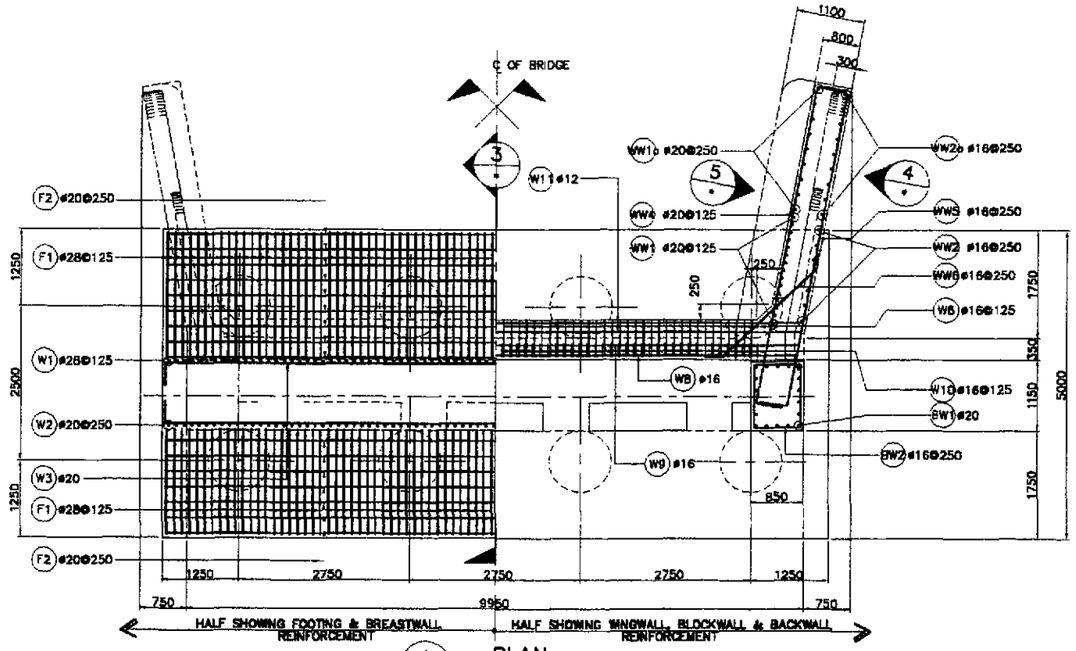

1 PLAN
SCALE 1:50

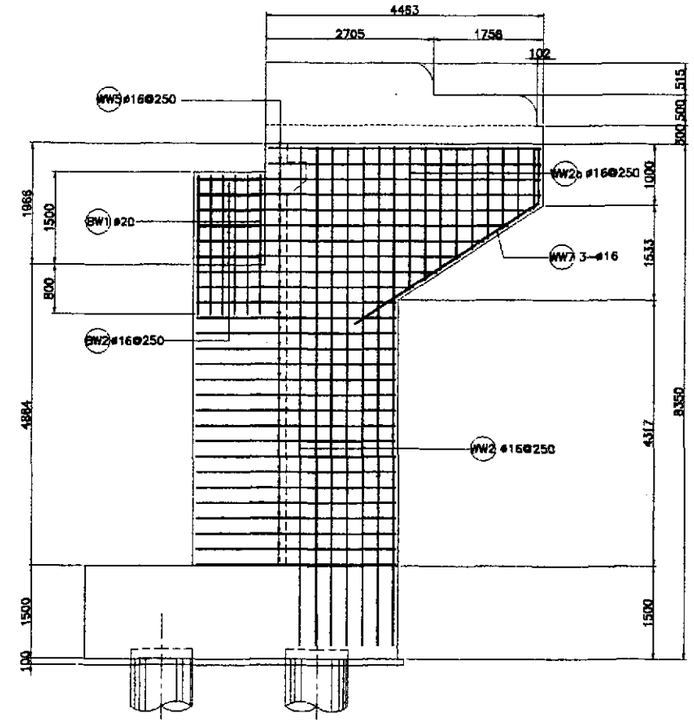

4 WINGWALL ELEVATION
SCALE 1:50

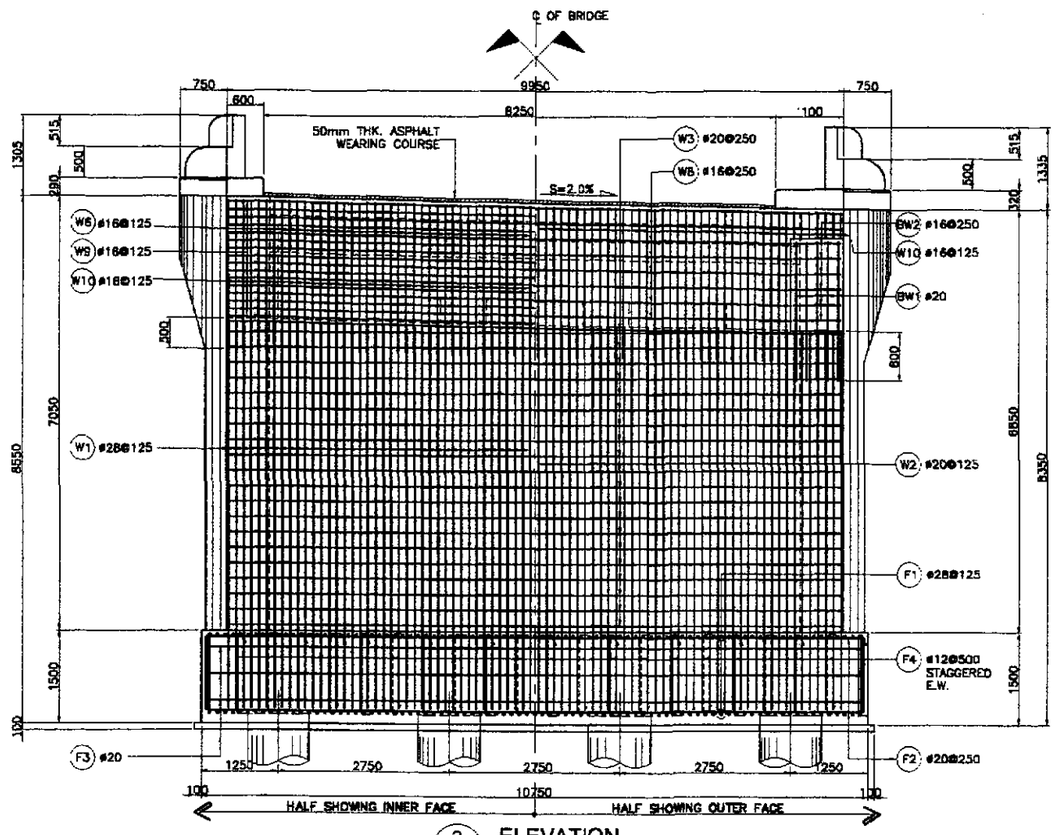

2 ELEVATION
SCALE 1:50

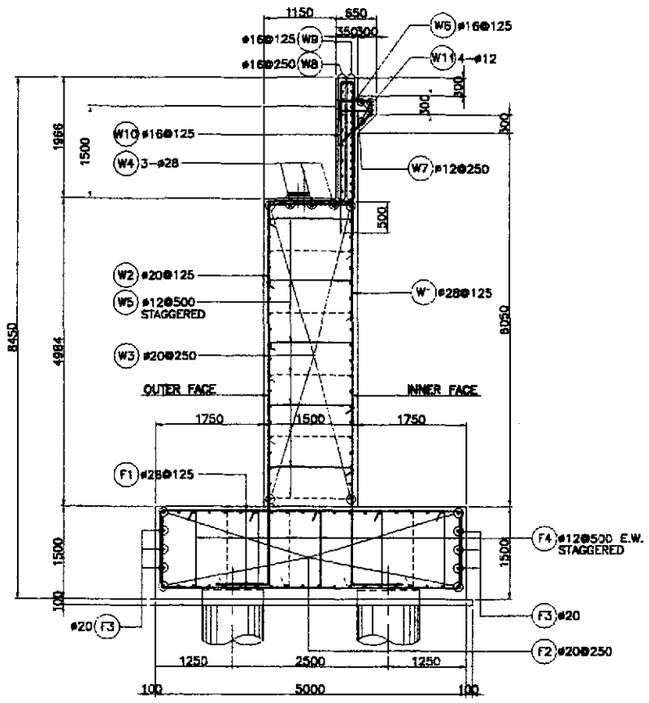

3 SECTION
SCALE 1:50

JICA
JAPAN INTERNATIONAL COOPERATION AGENCY
KEI KATAHIRA & ENGINEERS INTERNATIONAL
YCO YACHIYO ENGINEERING CO., LTD.

	DATE	SIGNATURE
DESIGNED	9/21/02	
CHECKED	9/23/02	
SUBMITTED	10/14/02	TEAM LEADER

REPUBLIC OF THE PHILIPPINES
DEPARTMENT OF PUBLIC WORKS AND HIGHWAYS

PJHL - PMO	BUREAU OF DESIGN		OFFICE OF THE SECRETARY	
Submitted By:	Reviewed By:	Recommended By:	Recommended By: (See cover sheet for Signature)	Approved By: (See cover sheet for Signature/Approval)
DANILO C. TRAJANO, Project Director	ADRIANO M. DOROY, Chief, Bridges Division	GILBERTO S. REYES, Director IV (OIC)	EDMUNDO V. MIR, Undersecretary	SIMEON A. DATUMANONG, Secretary

PROJECT AND LOCATION :	SCALE :	SHEET CONTENTS :	SHEET NO. :
PLARIDEL BYPASS - CONTRACT PACKAGE III	AS SHOWN FULL SIZE A1	BRIDGE NO. 8 ANGAT RIVER BRIDGE ABUTMENT A1 REINFORCEMENT DETAILS (1 OF 2) (INITIAL STAGE)	B8A-55

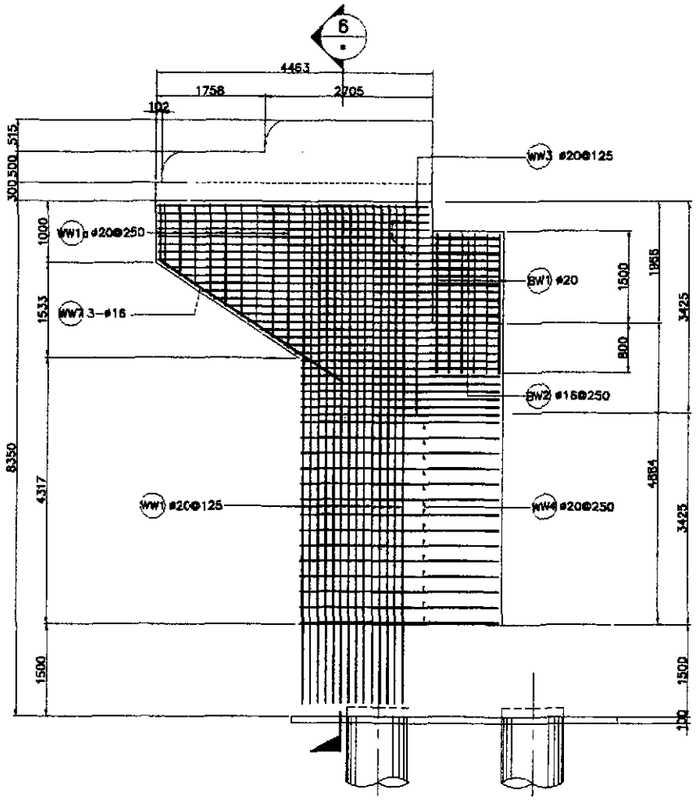

5 WINGWALL ELEVATION
SCALE 1:50

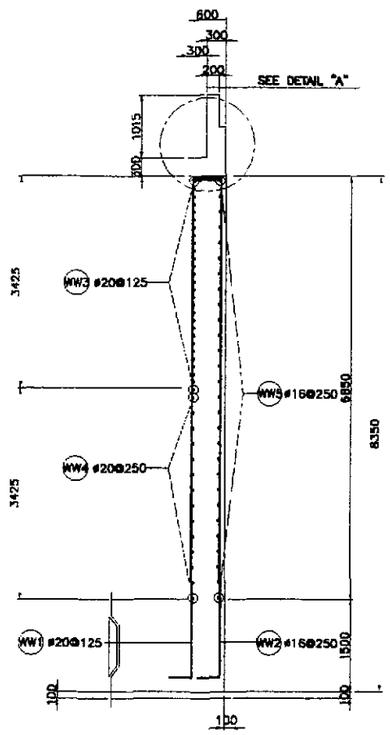

6 SECTION
SCALE 1:50

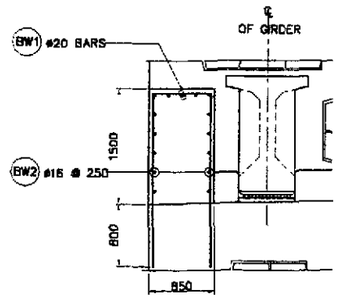

7 BLOCK WALL DETAIL
SCALE 1:40

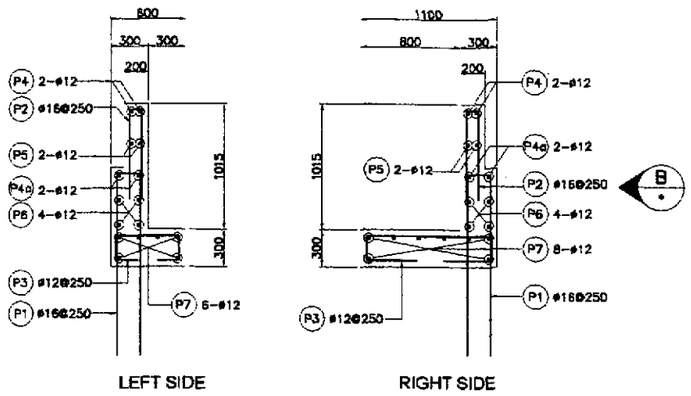

LEFT SIDE RIGHT SIDE

A DETAIL
SCALE 1:25

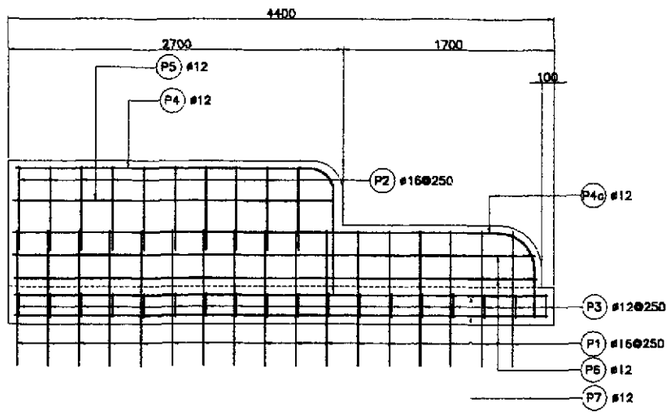

B ELEVATION
SCALE 1:25

BAR BENDING DIAGRAM

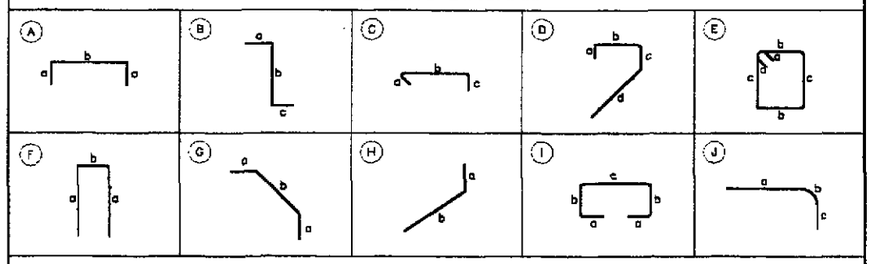

SCHEDULE OF REINFORCEMENT

LOCATION	BAR MARK	SIZE (mm)	BEND TYPE	DIMENSION(mm) OUT TO OUT a	b	c	d	e	f	LENGTH (mm)	NO. REQ'D.	UNIT WEIGHT (kg/m)	WEIGHT (kg) GRADE 40	GRADE 60
BREASTWALL	W1	28	B	1350	6185	525				8060	80	4.834		3'16.96
	W2	20	B	1350	6185	525				8060	80	2.466		1590.08
	W3	20	A	335	9800	335				10470	40	2.466		1032.76
	W4	28	A	500	9800					10800	3	4.834		156.62
	W5	12	C	130	1350	110				'590	220	0.888	3'0.62	
											TOTAL WEIGHT =		310.62	5,895.42
BACKWALL & CORBEL	W6	16	D	300	550	200	700			'750	70	1.578	193.3'	
	W7	12	STR	550						550	70	0.888	34.'9	
	W8	16	A	150	9800					10100	8	1.578	127.50	
	W9	16	A	150	9800					10100	16	1.578	255.00	
	W10	16	F	2700	250					5650	70	1.578	624.10	
	W11	12	STR	9800						9800	4	0.888	34.31	
											TOTAL WEIGHT =		1,258.91	0.00
BLOCKWALL	BW1	20	F	2250	915(ave.)					5415	18	2.466		240.36
	BW2	16	E	175	750	1050				3950	12	1.578	74.80	
										TOTAL WEIGHT (FOR 2 BLOCKWALLS) =			74.80	240.36
WINGWALL	WW1	20	B	335	7685	335				8355	28	2.466		576.90
	WW1a	20	A	335	1500(ave.)					2170	14	2.466		74.92
	WW2	16	A	335	7685					8355	14	1.578	184.58	
	WW2a	16	A	335	1500					2170	14	1.578	47.94	
	WW3	20	A	335	3885(ave.)					4555	52	2.466		584.10
	WW4	20	A	335	3100					3770	26	2.466		241.72
	WW5	16	A	150	3560(ave.)					3860	52	1.578	3'6.74	
	WW6	16	G	450	1900					2800	56	1.578	247.43	
	WW7	16	H	900	2800					3700	6	1.578	35.03	
										TOTAL WEIGHT (FOR 2 WINGWALLS) =			831.72	1,477.53
PARAPET RIGHT SIDE	P1	16	F	1250	200					2700	15	1.578	63.91	
	P2	16	F	500	100					'100	9	1.578	15.62	
	P3	12	I	420	200	1000				2240	16	0.888	3'.83	
	P4	12	J	2000	275	300				2575	2	0.888	4.57	
	P4a	12	J	3395	435	425				4245	2	0.888	7.54	
	P5	12	STR	2275						2275	2	0.888	4.04	
	P6	12	STR	3700						3700	4	0.888	13.14	
	P7	12	STR	3800						3800	8	0.888	27.00	
											TOTAL WEIGHT =		187.65	0.00
PARAPET LEFT SIDE	P1	16	F	1250	200					2700	15	1.578	63.91	
	P2	16	F	500	100					'100	9	1.578	15.62	
	P3	12	I	420	200	500				'740	16	0.888	24.72	
	P4	12	J	2000	275	300				2575	2	0.888	4.57	
	P4a	12	J	3395	435	425				4245	2	0.888	7.54	
	P5	12	STR	2275						2275	2	0.888	4.04	
	P6	12	STR	3700						3700	4	0.888	13.14	
	P7	12	STR	3800						3800	6	0.888	20.25	
											TOTAL WEIGHT =		153.79	0.00
FOOTING	F1	28	A	1350	4850					7550	170	4.834		6204.44
	F2	20	A	335	10600					11270	40	2.466		1'11.67
	F3	20	A	335	10600					11270	6	2.466		'66.75
	F4	12	C	130	1350	110				'590	242	0.888	341.68	
										TOTAL WEIGHT PER PIER =			341.68	7,482.86
										GRAND TOTAL WEIGHT =			3,149.17	15,087.27

THE REINFORCEMENT SHOWN ON THIS TABLE IS FOR REFERENCE ONLY. THE CONTRACTOR SHOULD CHECK AND VERIFY ALL DIMENSIONS, SIZES AND QUANTITIES OF REINFORCEMENT.

JICA
JAPAN INTERNATIONAL COOPERATION AGENCY
KEI KATAHIRA & ENGINEERS INTERNATIONAL
YEC YACHIYO ENGINEERING CO., LTD.

	DATE	SIGNATURE
DESIGNED	9/21/02	A. [illegible]
CHECKED	9/23/02	J. [illegible] SANTOS
SUBMITTED	10/14/02	[illegible] TEAM LEADER

REPUBLIC OF THE PHILIPPINES
DEPARTMENT OF PUBLIC WORKS AND HIGHWAYS

PUHL – PMO	BUREAU OF DESIGN		OFFICE OF THE SECRETARY	
Submitted By:	Reviewed By:	Recommended By:	Recommended By: (See cover sheet for Signature)	Approved By: (See cover sheet for Signature/Approval)
DANILO C. TRAJANO, Project Director	ADRIANO M. DOROY, Chief, Bridges Division	GILBERTO S. REYES, Director IV (OIC)	MANUEL M. BONDAN, Undersecretary	SIMEON A. DATUMANONG, Secretary

PROJECT AND LOCATION :
THE DETAILED DESIGN STUDY ON UPGRADING INTER-URBAN HIGHWAY SYSTEM ALONG THE PAN-PHILIPPINE HIGHWAY (Plaridel, Cabanatuan and San Jose Bypasses)
PLARIDEL BYPASS - CONTRACT PACKAGE III

SCALE :
AS SHOWN
FULL SIZE A1

SHEET CONTENTS :
BRIDGE NO. 8 ANGAT RIVER BRIDGE
ABUTMENT A1 REINFORCEMENT DETAILS (2 OF 2)
(INITIAL STAGE)

SHEET NO. :
B8A-56

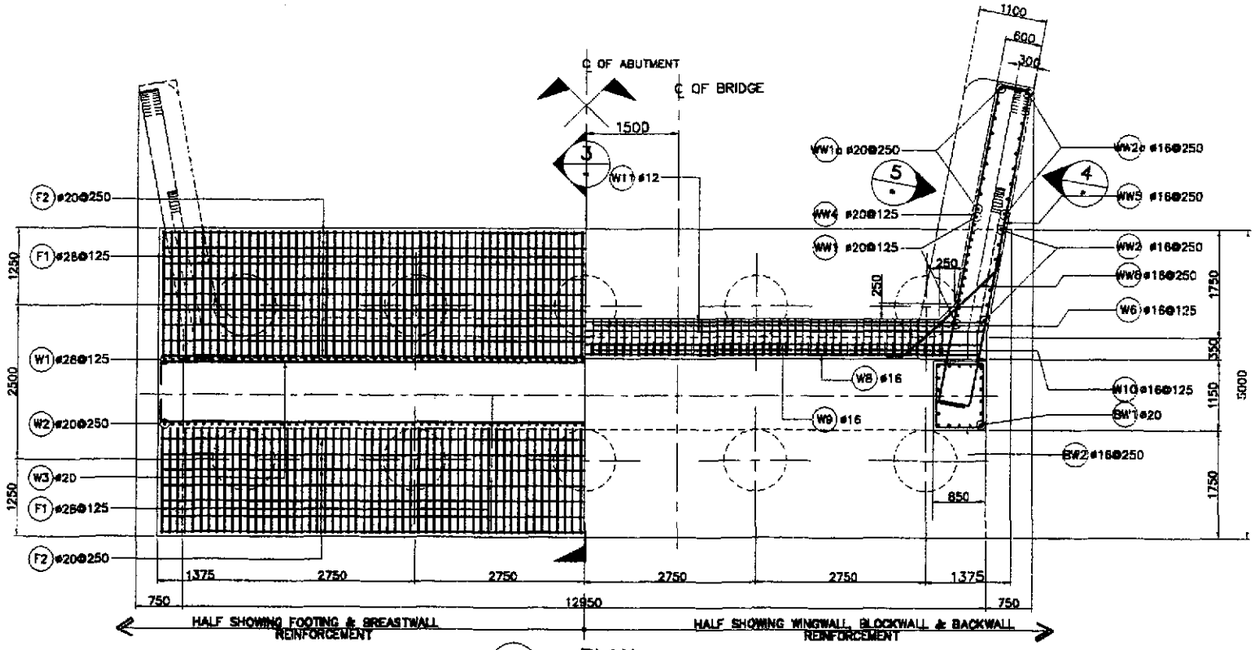

1 PLAN
SCALE 1:50

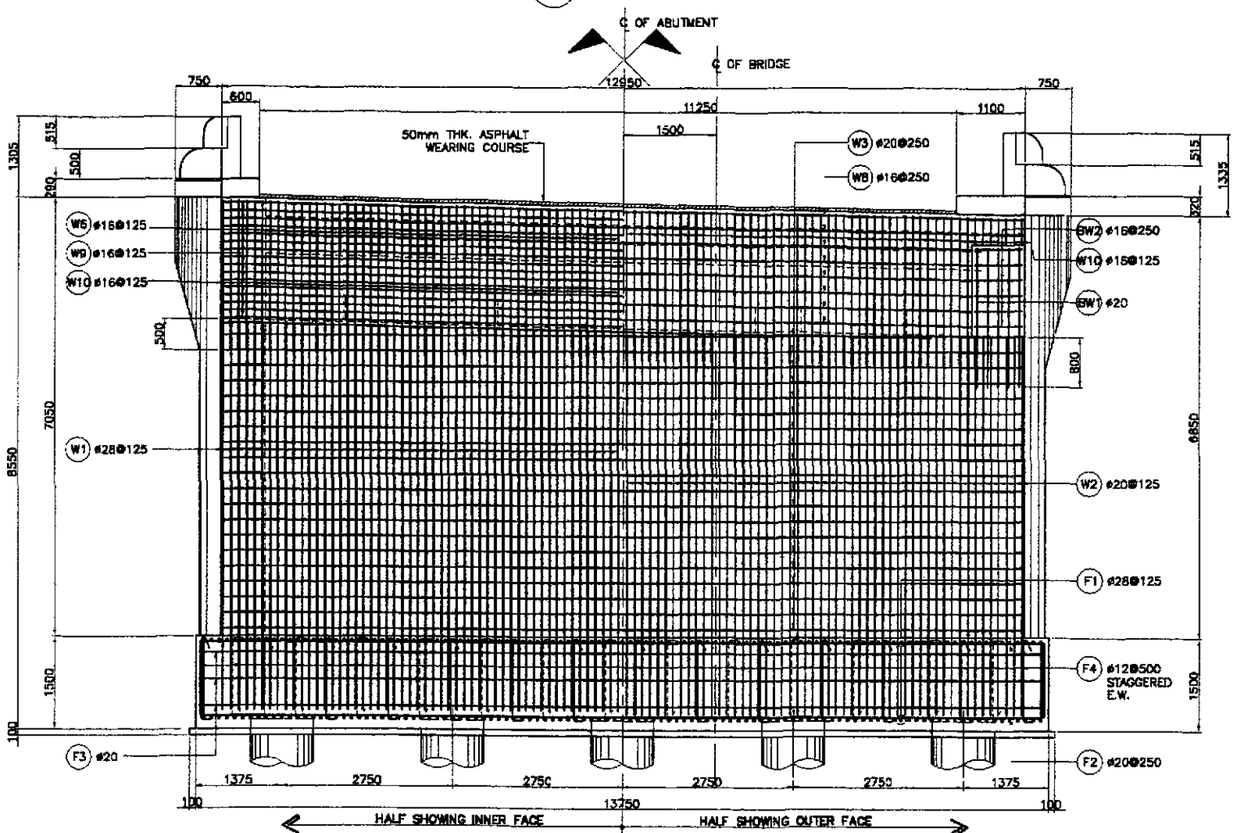

2 ELEVATION
SCALE 1:50

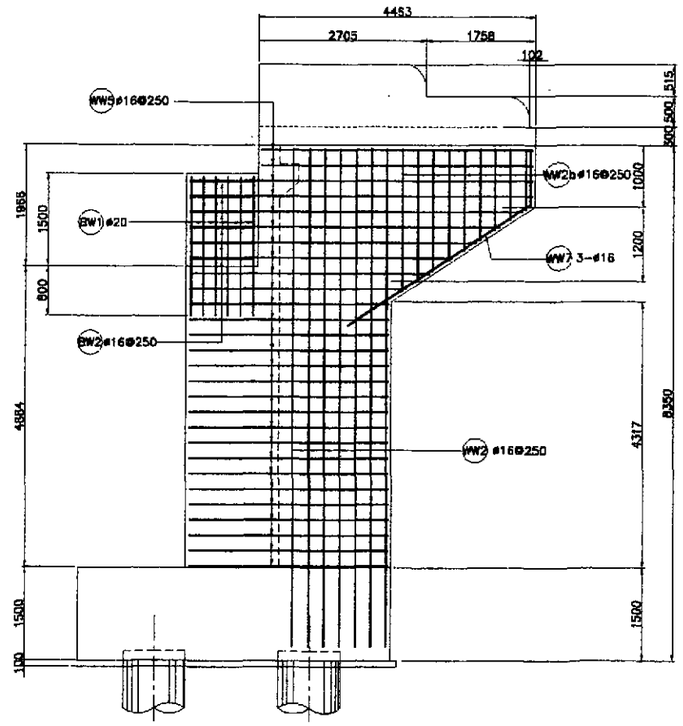

4 WINGWALL ELEVATION
SCALE 1:50

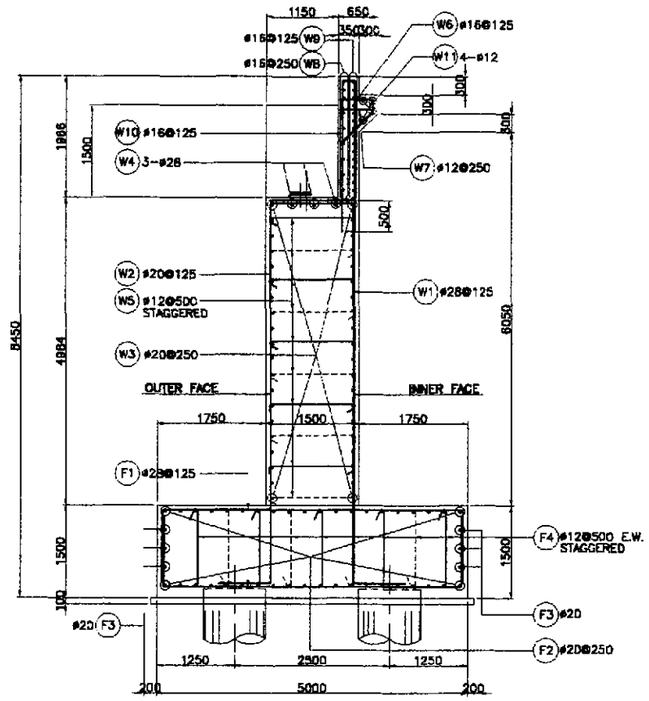

3 SECTION
SCALE 1:50

JICA
JAPAN INTERNATIONAL COOPERATION AGENCY
KATAHIRA & ENGINEERS INTERNATIONAL
YACHIYO ENGINEERING CO., LTD.

	DATE	SIGNATURE
DESIGNED	9/21/02	A. S. NAVAL
CHECKED	9/23/02	J. SANTOS
SUBMITTED	10/14/02	TEAM LEADER

REPUBLIC OF THE PHILIPPINES
DEPARTMENT OF PUBLIC WORKS AND HIGHWAYS

FUHL - PMO	BUREAU OF DESIGN		OFFICE OF THE SECRETARY	
Submitted By:	Reviewed By:	Recommended By:	Recommended By: (See cover sheet for Signature)	Approved By: (See cover sheet for Signature/Approval)
DANILO C. TRAJANO	ADRIANO M. DORGY	GILBERTO S. REYES	MANUEL M. BONDAN	SIMEON A. DATUMANONG
Project Director	Chief, Bridges Division	Director IV (OIC)	Undersecretary	Secretary

PROJECT AND LOCATION :
THE DETAILED DESIGN STUDY ON UPGRADING INTER-URBAN HIGHWAY SYSTEM ALONG THE PAN-PHILIPPINE HIGHWAY (Plaridel, Cabanatuan and San Jose Bypasses)
PLARIDEL BYPASS - CONTRACT PACKAGE III

SCALE : AS SHOWN
FULL SIZE A1

SHEET CONTENTS :
BRIDGE NO. 8 ANGAT RIVER BRIDGE
ABUTMENT A2 REINFORCEMENT DETAILS (1 OF 2)
(INITIAL STAGE)

SHEET NO. : B8A-57

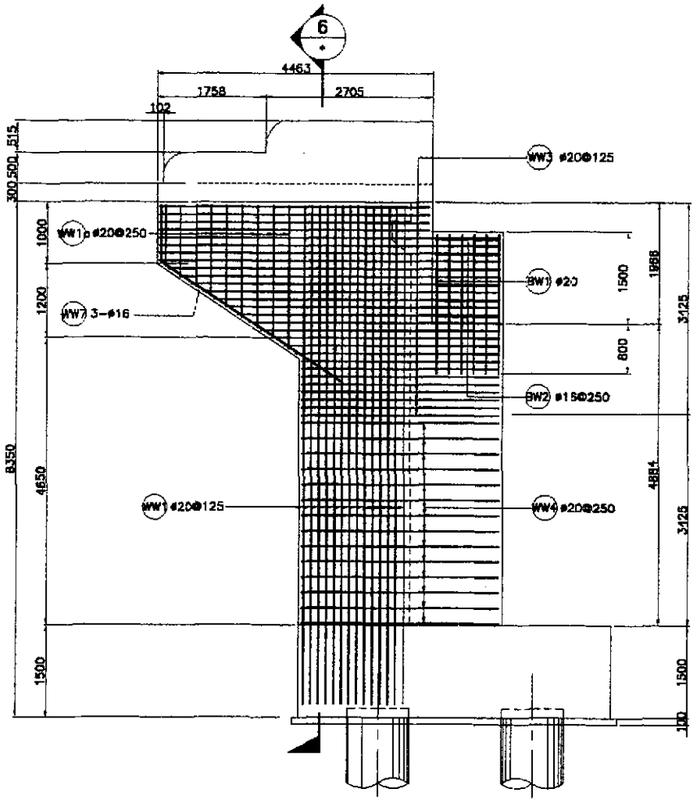

5 WINGWALL ELEVATION
SCALE 1:50

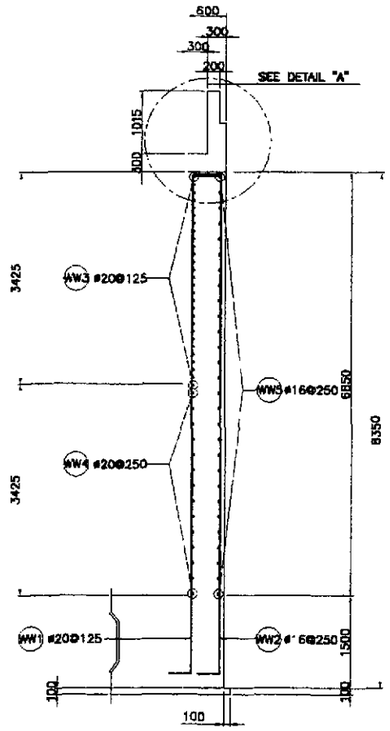

6 SECTION
SCALE 1:50

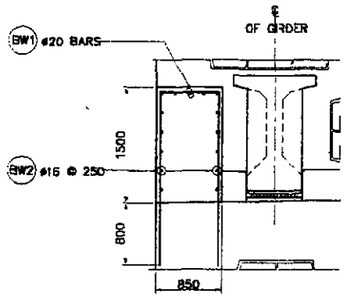

7 BLOCK WALL DETAIL
SCALE 1:40

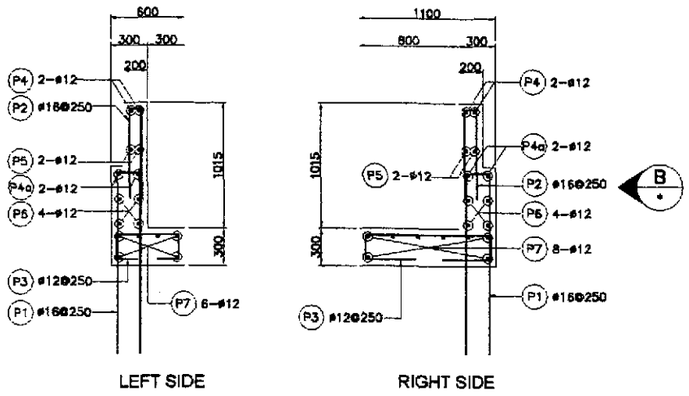

LEFT SIDE

RIGHT SIDE

A DETAIL
SCALE 1:25

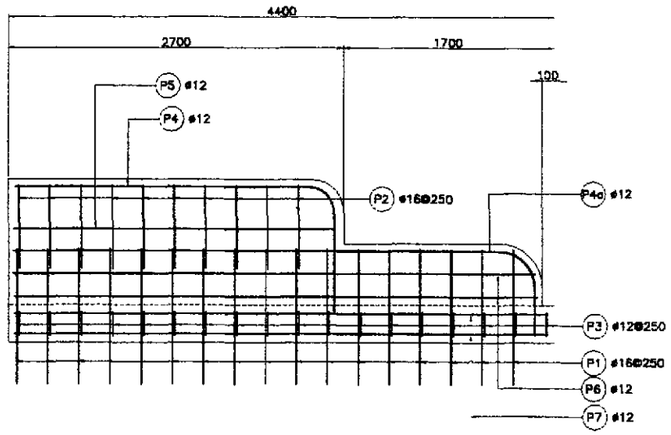

B ELEVATION
SCALE 1:25

BAR BENDING DIAGRAM

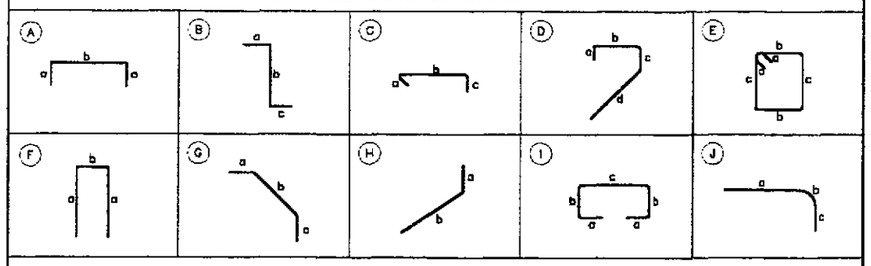

SCHEDULE OF REINFORCEMENT

LOCATION	BAR MARK	SIZE (mm)	BEND TYPE	DIMENSION(mm) OUT TO OUT a	b	c	d	e	f	LENGTH (mm)	NO. REQ'D.	UNIT WEIGHT (kg/m)	WEIGHT (kg) GRADE 40	GRADE 60
BREASTWALL	W1	28	B	1350	6185	525				8060	104	4.834		4052.05
	W2	20	B	1350	6185	525				8060	104	2.466		2067.10
	W3	20	A	335	12800	335				13470	40	2.466		1328.68
	W4	28	A	500	12800					13800	3	4.834		200.13
	W5	12	C	130	1350	110				1590	260	0.888	367.10	
											TOTAL WEIGHT =		367.10	7,647.96
BACKWALL & CORBEL	W6	16	D	300	550	200	700			1750	94	1.578	259.58	
	W7	12	STR	550						550	94	0.888	45.9[illegible]	
	W8	16	A	150	12800					13100	8	1.578	165.37	
	W9	16	A	150	12800					13100	16	1.578	330.75	
	W10	16	F	2700	250					5650	94	1.578	838.08	
	W11	12	STR	9800						9800	4	0.888	34.81	0.00
											TOTAL WEIGHT =		1,674.50	0.00
BLOCKWALL	BW1	20	F	2250	915(ave.)					5415	18	2.466		240.36
	BW2	16	E	175	750	1050				3950	12	1.578	74.80	
										TOTAL WEIGHT (FOR 2 BLOCKWALLS) =			74.80	240.36
WINGWALL	WW1	20	B	335	7685	335				8355	28	2.466		576.90
	WW1a	20	A	335	1500(ave.)					2170	14	2.466		74.92
	WW2	16	A	335	7685					8355	14	1.578	184.58	
	WW2a	16	A	335	1500					2170	14	1.578	47.94	
	WW3	20	A	335	3885(ave.)					4555	52	2.466		584.10
	WW4	20	A	335	3100					3770	26	2.466		241.72
	WW5	16	A	150	3560(ave.)					3860	52	1.578	3[illegible]6.74	
	WW6	16	G	450	1900					2800	56	1.578	247.43	
	WW7	16	H	900	2800					3700	6	1.578	35.03	
										TOTAL WEIGHT (FOR 2 WINGWALLS) =			509.20	1,477.63
PARAPET RIGHT SIDE	P1	16	F	1250	200					2700	15	1.578	63.91	
	P2	16	F	500	100					700	9	1.578	15.62	
	P3	12	I	420	200	1000				2240	16	0.888	3[illegible].83	
	P4	12	J	2000	275	300				2575	2	0.888	4.57	
	P4a	12	J	3385	435	425				4245	2	0.888	7.54	
	P5	12	STR	2275						2275	2	0.888	4.04	
	P6	12	STR	3700						3700	4	0.888	13.14	
	P7	12	STR	3800						3800	8	0.888	27.00	
											TOTAL WEIGHT =		187.65	0.00
PARAPET LEFT SIDE	P1	16	F	1250	200					2700	15	1.578	63.91	
	P2	16	F	500	100					700	9	1.578	15.62	
	P3	12	I	420	200	500				1740	16	0.888	24.72	
	P4	12	J	2000	275	300				2575	2	0.888	4.57	
	P4a	12	J	3385	435	425				4245	2	0.888	7.54	
	P5	12	STR	2275						2275	2	0.888	4.04	
	P6	12	STR	3700						3700	4	0.888	13.14	
	P7	12	STR	3800						3800	8	0.888	20.25	
											TOTAL WEIGHT =		153.79	0.00
FOOTING	F1	28	A	1350	4850					7550	220	4.834		8029.27
	F2	20	A	335	13600					14270	40	2.466		1407.59
	F3	20	A	335	13600					14270	8	2.466		211.[illegible]4
	F4	12	C	130	1350	110				1590	242	0.888	341.68	
										TOTAL WEIGHT PER PIER =			341.68	9,648.01
										GRAND TOTAL WEIGHT =			3,378.72	19,013.95

THE REINFORCEMENT SHOWN ON THIS TABLE IS FOR REFERENCE ONLY. THE CONTRACTOR SHOULD CHECK AND VERIFY ALL DIMENSIONS, SIZES AND QUANTITIES OF REINFORCEMENT.

JICA
JAPAN INTERNATIONAL COOPERATION AGENCY
KEI KATAHIRA & ENGINEERS INTERNATIONAL
YEC YACHIYO ENGINEERING CO., LTD.

	DATE	SIGNATURE
DESIGNED	9/21/02	M. SUGUAL
CHECKED	9/23/02	J. C. SANTOS
SUBMITTED	10/14/02	TEAM LEADER

REPUBLIC OF THE PHILIPPINES
DEPARTMENT OF PUBLIC WORKS AND HIGHWAYS

FUNL – PMO	BUREAU OF DESIGN		OFFICE OF THE SECRETARY	
Submitted By:	Reviewed By:	Recommended By:	Recommended By: (See cover sheet for Signature)	Approved By: (See cover sheet for Signature/Approval)
DANILO C. TRAJANO	ADRIANO M. DOROY	GILBERTO S. REYES	MANUEL M. BONDAN	SIMEON A. DATUMANONG
Project Director	Chief, Bridges Division	Director IV (OIC)	Undersecretary	Secretary

PROJECT AND LOCATION :
THE DETAILED DESIGN STUDY ON UPGRADING INTER-URBAN HIGHWAY SYSTEM ALONG THE PAN-PHILIPPINE HIGHWAY (Plaridel, Cabanatuan and San Jose Bypasses)
PLARIDEL BYPASS - CONTRACT PACKAGE III

SCALE :
AS SHOWN
FULL SIZE A1

SHEET CONTENTS :
BRIDGE NO. 8 ANGAT RIVER BRIDGE
ABUTMENT A2 REINFORCEMENT DETAILS (2 OF 2)
(INITIAL STAGE)

SHEET NO. :
B8A-58

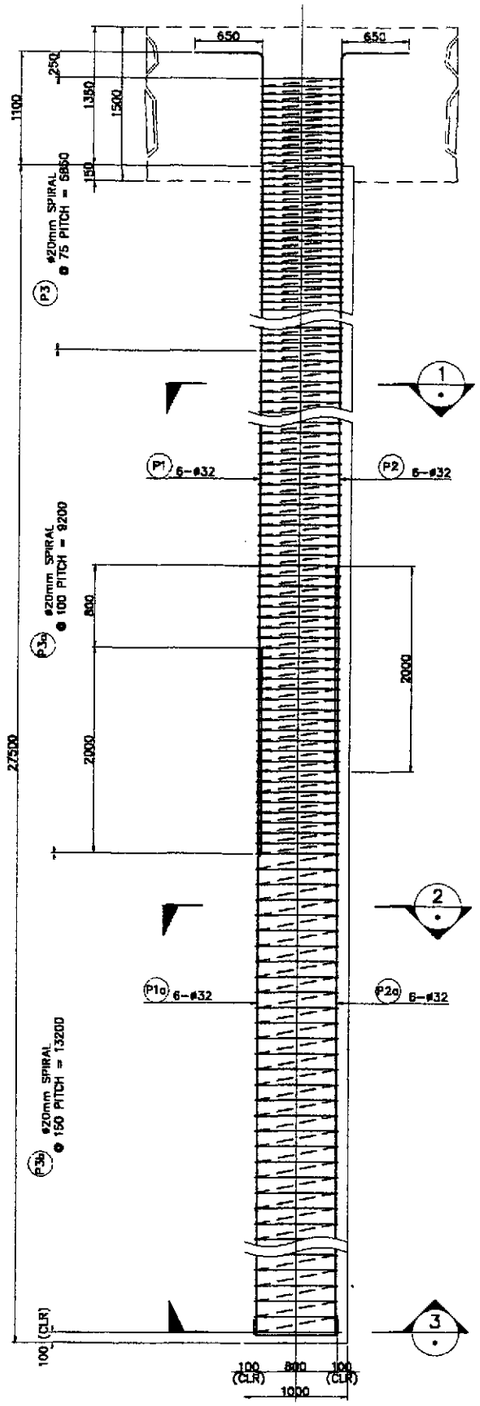

A ELEVATION
SCALE 1:30

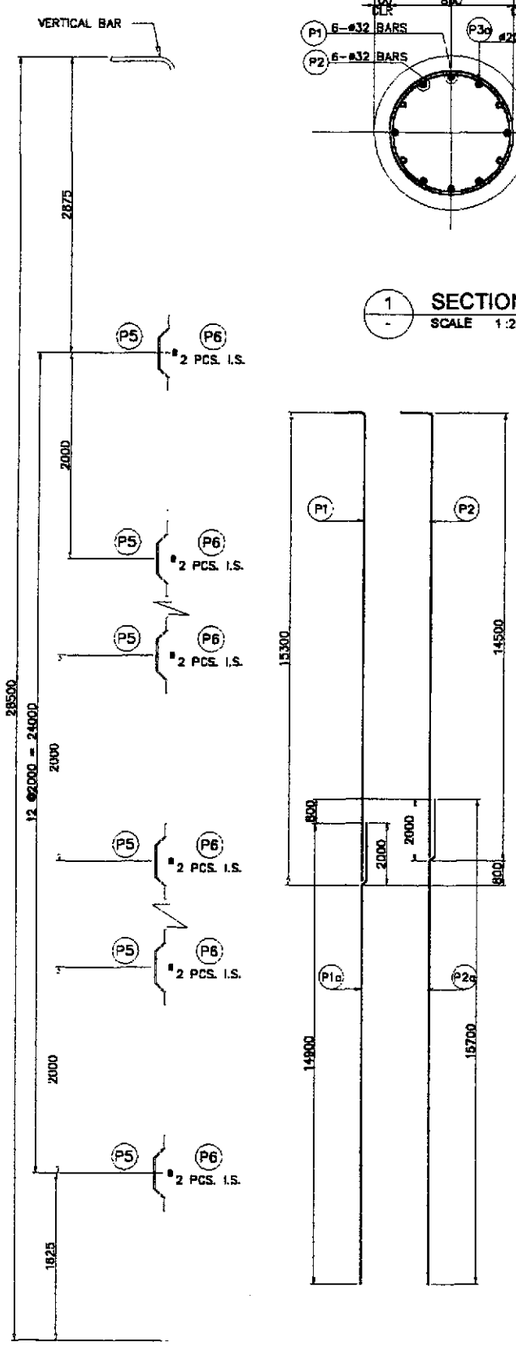

B LAYOUT OF STIFFENER
SCALE 1:30

C SCHEMATIC DETAIL
NOT TO SCALE

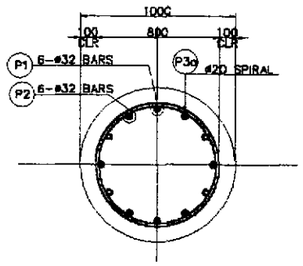

1 SECTION
SCALE 1:20

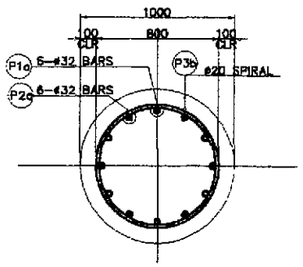

2 SECTION
SCALE 1:20

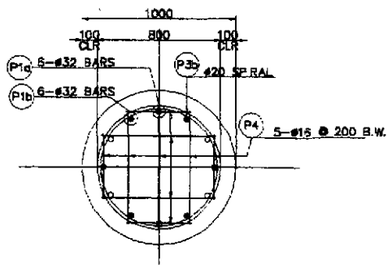

3 SECTION
SCALE 1:20

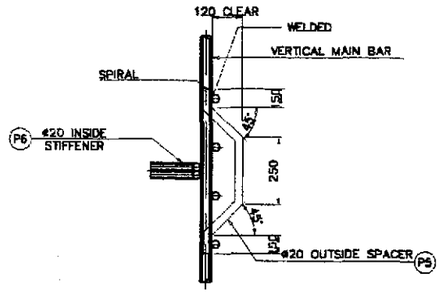

E DETAIL OF STIFFENER/SPACER
NOT TO SCALE

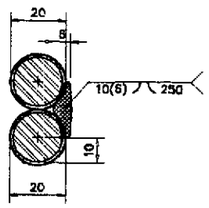

DOUBLE FLARED-V-GROOVE WELD
SECTION - D1

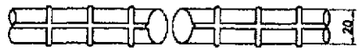

PLAN (BARS BEFORE WELDING)

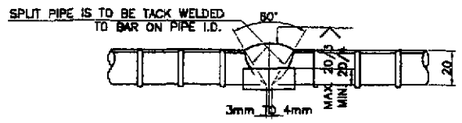

DETAILS OF SINGLE-V-GROOVE BUTT WELD

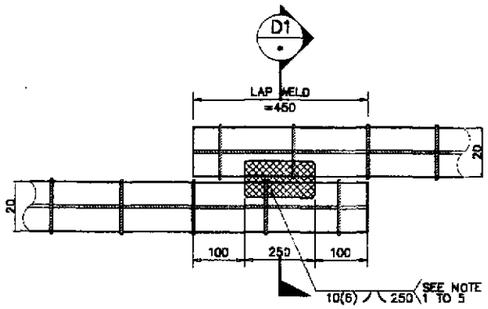

DIRECT LAP JOINT WITH BARS IN CONTACT

D DETAILS OF SPIRAL REINF. FULL LAP-WELD CONNECTION
NOT TO SCALE

NOTES ON LAP WELD CONNECTION

1. TIES REINFORCEMENT ARE LAP-WELD CONNECTED (FLARED-V-GROOVE TYPE).
2. WELDING SHOULD CONFORM TO ANSI/AWS D1.4-92 "STRUCTURAL WELDING CODE REINFORCEMENT STEEL".
3. USE ELECTRODE E80XX-X.
4. CARE SHOULD BE TAKEN NOT TO DAMAGE THE BORED PILE MAIN BARS DURING WELDING.
5. SPIRAL REINFORCEMENT SHOULD BE BUTT WELDED WHERE SPIRAL PITCH IS 75mm. OTHERWISE, USE LAP WELD SPLICE.

BAR BENDING DIAGRAM

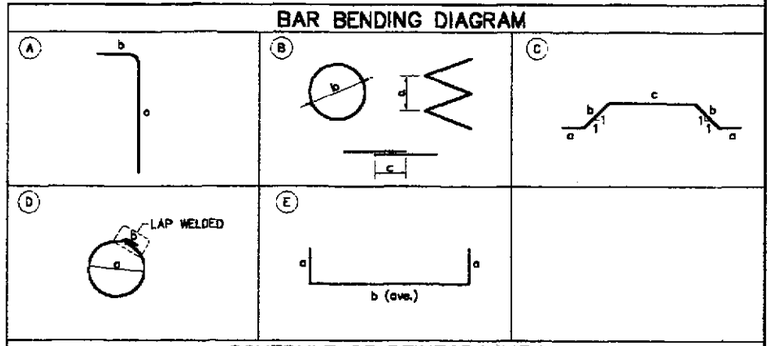

SCHEDULE OF REINFORCEMENT

LOCATION	BAR MARK	SIZE (mm)	BEND TYPE	DIMENSION (mm) OUT TO OUT a	b	c	d	LENGTH (mm)	NO. REQ'D.	UNIT WEIGHT (kg/m)	WEIGHT (kg) GRADE 40	GRADE 60
ABUTMENT A1	P1	32	A	15300	650			15950	6	6.313		604.13
	P1a	32	STR	14900				14900	6	6.313		564.38
	P2	32	A	14500	650			15150	6	6.313		573.85
	P2a	32	STR	16000				16000	6	6.313		606.05
	P3	20	B	75	780	500		198725	-	2.466		490.06
	P3a	20	B	100	780	500		235128	-	2.466		579.83
	P3b	20	B	150	780	500		225545	-	2.466		556.19
	P4	16	E	150	590			890	10	1.578	14.04	
	P5	20	C	150	170	250		890	112	2.466		245.81
	P6	20	D	665	500			2590	28	2.466		178.83
								TOTAL WEIGHT PER PILE =			14.04	4,399.16
								TOTAL WEIGHT (8 PILES) =			112.35	35,193.25

THE REINFORCEMENT SHOWN ON THIS TABLE IS FOR REFERENCE ONLY. THE CONTRACTOR SHOULD CHECK AND VERIFY ALL DIMENSIONS, SIZES AND QUANTITIES OF REINFORCEMENT.

1 BORED PILE REINFORCEMENT DETAILS (ABUTMENT A1)
SCALE AS SHOWN

JICA
JAPAN INTERNATIONAL COOPERATION AGENCY
KEI KATAHIRA & ENGINEERS INTERNATIONAL
YEC YACHIYO ENGINEERING CO., LTD.

	DATE	SIGNATURE
DESIGNED	9/21/02	M. S. NAVAL
CHECKED	9/23/02	J.C. SANTOS
SUBMITTED	10/1/02	TEAM LEADER

REPUBLIC OF THE PHILIPPINES
DEPARTMENT OF PUBLIC WORKS AND HIGHWAYS

FUHL - PMO	BUREAU OF DESIGN		OFFICE OF THE SECRETARY	
Submitted By:	Reviewed By:	Recommended By:	Recommended By: (See cover sheet for Signature)	Approved By: (See cover sheet for Signature/Approval)
DANILO C. TRAJAND, Project Director	ADRIANO M. DOROY, Chief, Bridges Division	GILBERTO S. REYES, Director IV (OIC)	MANUEL M. BONDAN, Undersecretary	SIMEON A. DATUMANONG, Secretary

PROJECT AND LOCATION :
THE DETAILED DESIGN STUDY ON UPGRADING INTER-URBAN HIGHWAY SYSTEM ALONG THE PAN-PHILIPPINE HIGHWAY (Plaridel, Cabanatuan and San Jose Bypasses)
PLARIDEL BYPASS - CONTRACT PACKAGE III

SCALE : AS SHOWN
FULL SIZE A1

SHEET CONTENTS :
BRIDGE NO. 8 ANGAT RIVER BRIDGE
BORED PILE REINFORCEMENT DETAILS (ABUTMENT A1)
(INITIAL STAGE)

SHEET NO. : B8A-59

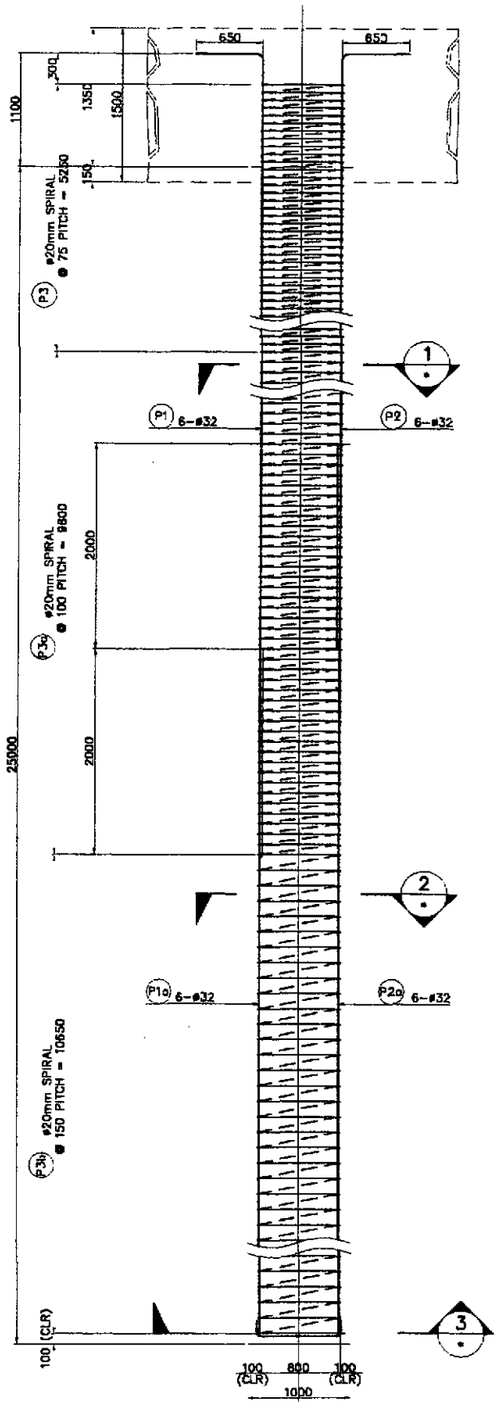

A SCALE 1:30 ELEVATION

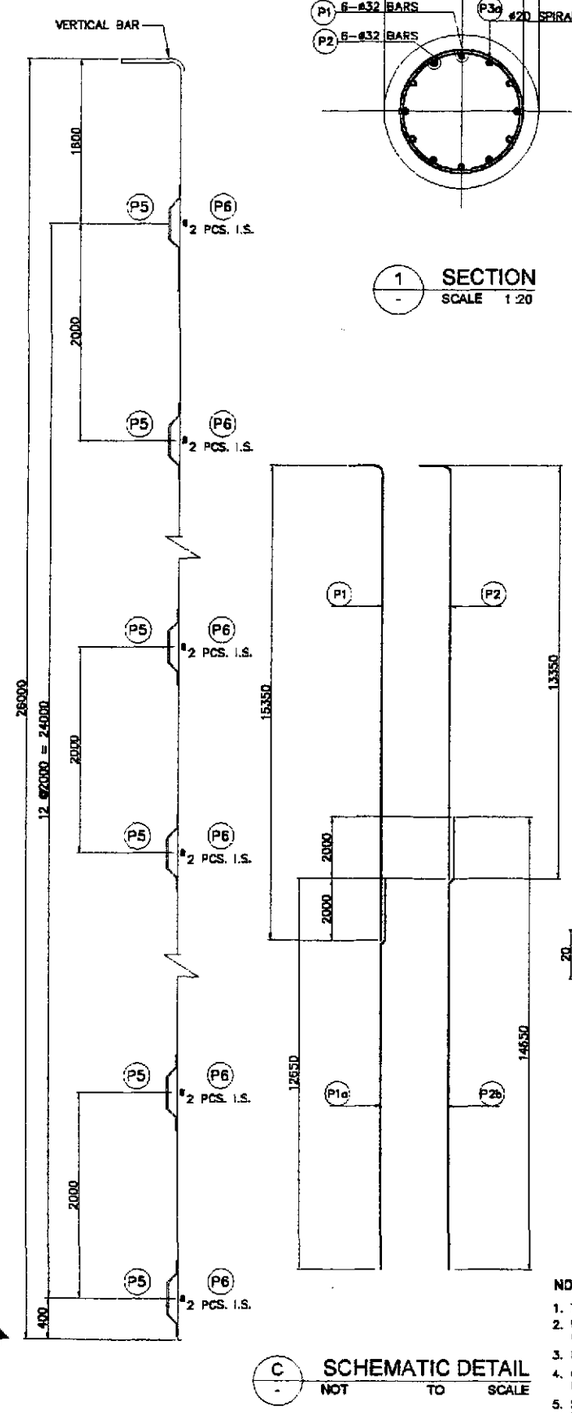

B SCALE 1:30 LAYOUT OF STIFFENER

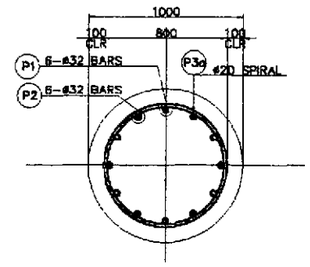

1 SCALE 1:20 SECTION

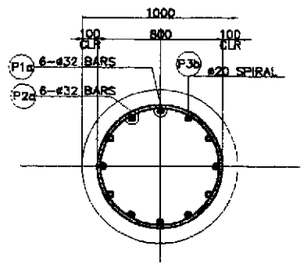

2 SCALE 1:20 SECTION

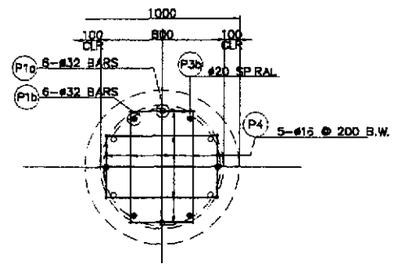

3 SCALE 1:20 SECTION

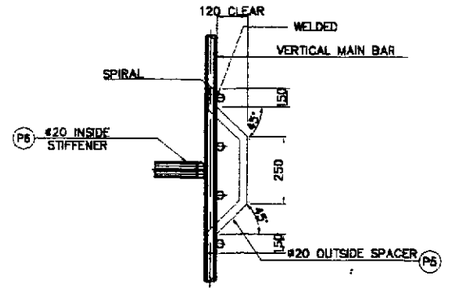

E NOT TO SCALE DETAIL OF STIFFENER/SPACER

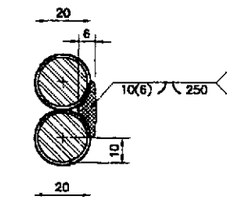

DOUBLE FLARED-V-GROOVE WELD
SECTION - D1

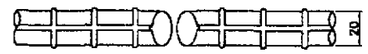

PLAN (BARS BEFORE WELDING)

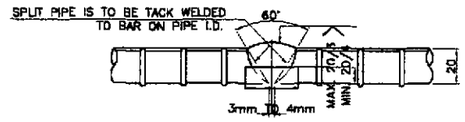

DETAILS OF SINGLE-V-GROOVE BUTT WELD

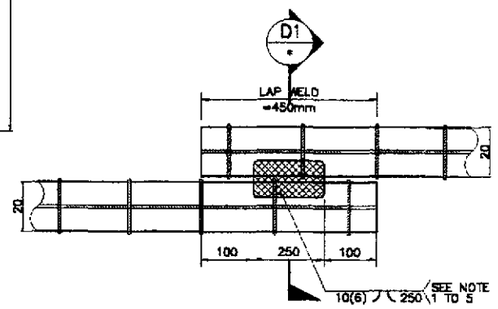

DIRECT LAP JOINT WITH BARS IN CONTACT

D NOT TO SCALE DETAILS OF SPIRAL REINF. FULL LAP-WELD CONNECTION

C NOT TO SCALE SCHEMATIC DETAIL

NOTES ON LAP WELD CONNECTION

1. TIES REINFORCEMENT ARE LAP-WELD CONNECTED (FLARED-V-GROOVE TYPE).
2. WELDING SHOULD CONFORM TO ANSI/AWS D1.4-92 "STRUCTURAL WELDING CODE REINFORCEMENT STEEL".
3. USE ELECTRODE E90XX-X.
4. CARE SHOULD BE TAKEN NOT TO DAMAGE THE BORED PILE MAIN BARS DURING WELDING.
5. SPIRAL REINFORCEMENT SHOULD BE BUTT WELDED WHERE SPIRAL PITCH IS 75mm. OTHERWISE, USE LAP WELD SPLICE.

1 SCALE AS SHOWN BORED PILE REINFORCEMENT DETAILS (ABUTMENT A2)

BAR BENDING DIAGRAM

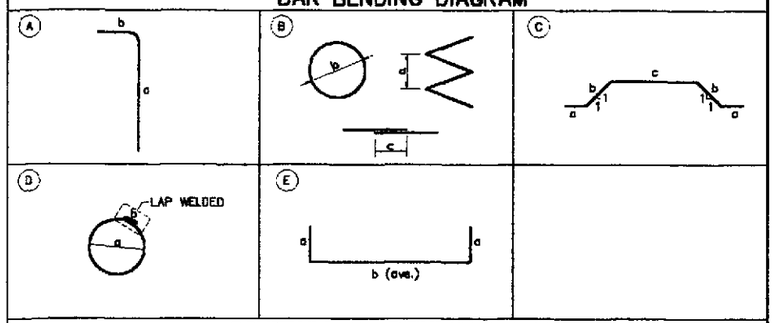

SCHEDULE OF REINFORCEMENT

LOCATION	BAR MARK	SIZE (mm)	BEND TYPE	DIMENSION(mm) OUT TO OUT a	b	c	d	LENGTH (mm)	NO. REQ'D.	UNIT WEIGHT (kg/m)	WEIGHT (kg) GRADE 40	GRADE 60
ABUTMENT A2	P1	32	A	15300	650			15950	6	6.313		604.15
	P1a	32	STR	12650				12650	6	6.313		479.16
	P2	32	A	13350	650			14000	6	6.313		530.29
	P2a	32	STR	14550				14650	6	6.313		554.91
	P3	20	B	75	780	500		179112	-	2.466		441.69
	P3a	20	B	100	780	500		250343	-	2.466		617.35
	P3b	20	B	150	780	500		181807	-	2.466		448.34
	P4	16	E	150	590			890	10	1.578	14.04	
	P5	20	C	150	170	250		890	104	2.466		228.25
	P6	20	D	665	500			2590	26	2.466		166.05
								TOTAL WEIGHT PER PILE =			14.04	4,070.20
								TOTAL WEIGHT (10 PILES) =			140.44	40,702.01

THE REINFORCEMENT SHOWN ON THIS TABLE IS FOR REFERENCE ONLY. THE CONTRACTOR SHOULD CHECK AND VERIFY ALL DIMENSIONS, SIZES AND QUANTITIES OF REINFORCEMENT.

JICA
JAPAN INTERNATIONAL COOPERATION AGENCY
KATAHIRA & ENGINEERS INTERNATIONAL
YACHIYO ENGINEERING CO., LTD.

	DATE	SIGNATURE
DESIGNED	9/21/02	M. SAWADA
CHECKED	9/23/02	J.C. SANTOS
SUBMITTED	10/14/02	TEAM LEADER

REPUBLIC OF THE PHILIPPINES
DEPARTMENT OF PUBLIC WORKS AND HIGHWAYS

PUHL - PMO	BUREAU OF DESIGN		OFFICE OF THE SECRETARY	
Submitted By:	Reviewed By:	Recommended By:	Recommended By: (See cover sheet for Signature)	Approved By: (See cover sheet for Signature/Approval)
DANILO C. TRAJANO, Project Director	ADRIANO M. DOROY, Chief, Bridges Division	GILBERTO S. REYES, Director IV (OIC)	MANUEL M. BONGAN, Undersecretary	SIMEON A. DATUMANONG, Secretary

PROJECT AND LOCATION :
THE DETAILED DESIGN STUDY ON UPGRADING INTER-URBAN HIGHWAY SYSTEM ALONG THE PAN-PHILIPPINE HIGHWAY (Plaridel, Cabanatuan and San Jose Bypasses)
PLARIDEL BYPASS - CONTRACT PACKAGE III

SCALE : AS SHOWN
FULL SIZE A1

SHEET CONTENTS :
BRIDGE NO. 8 ANGAT RIVER BRIDGE
BORED PILE REINFORCEMENT DETAILS (ABUTMENT A2)
(INITIAL STAGE)

SHEET NO. : B8A-60