SUBSTRUCTURE REINFORCING BARS

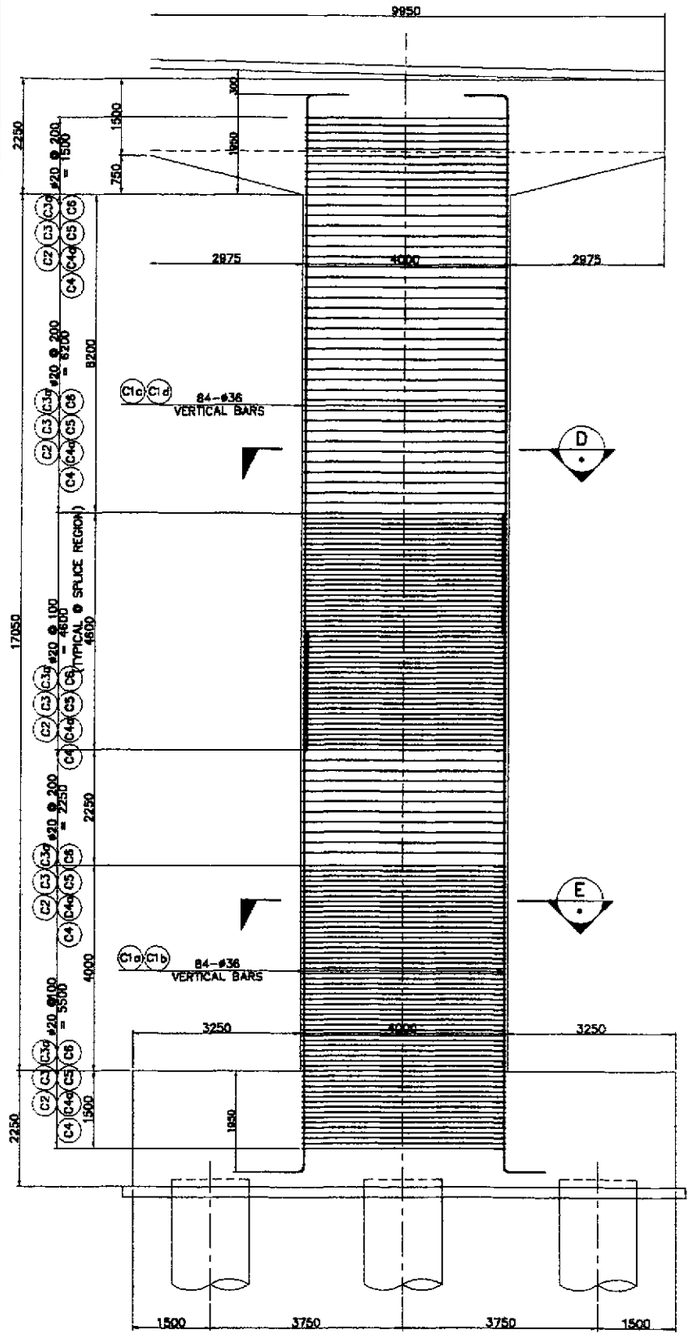

A FRONT ELEVATION
SCALE 1 : 60

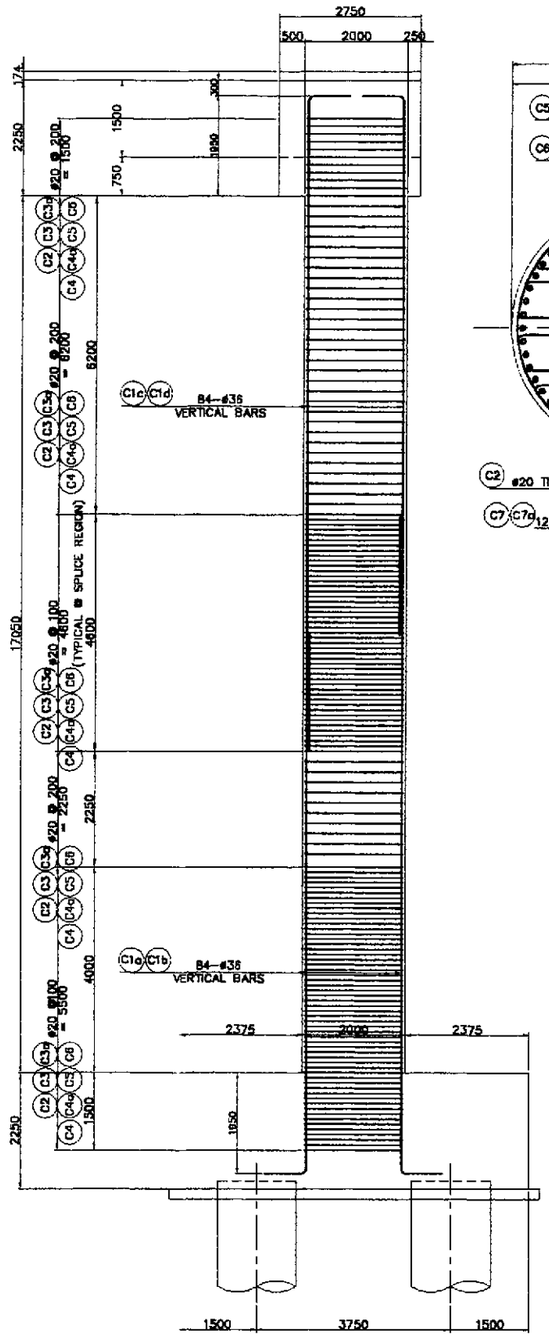

B SIDE ELEVATION
SCALE 1 : 60

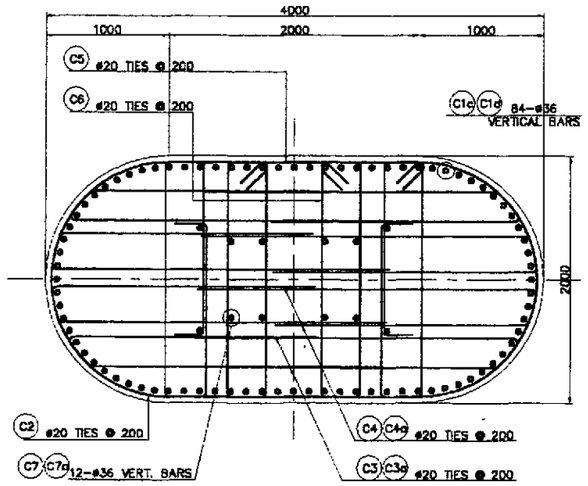

D SECTION
SCALE 1 : 25

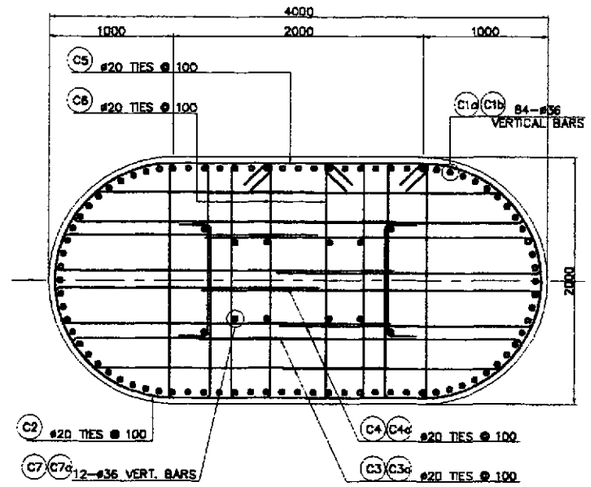

E SECTION
SCALE 1 : 25

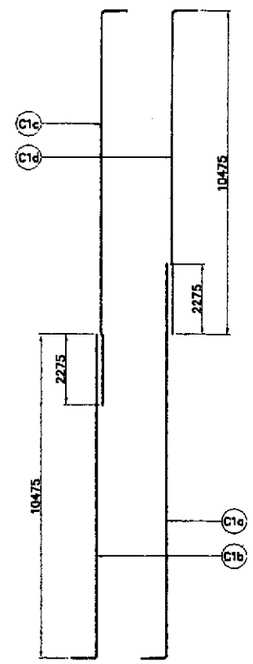

C DETAIL
NOT TO SCALE

1 COLUMN REINFORCEMENT DETAIL(PIER 14 & PIER 21)
SCALE AS SHOWN

BAR BENDING DIAGRAM

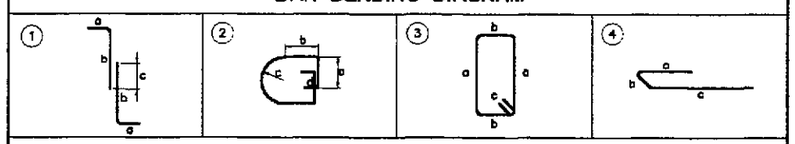

SCHEDULE OF REINFORCEMENT

LOCATION	BAR MARK	SIZE (mm)	BEND TYPE	DIMENSION(mm) OUT TO OUT a	b	c	d	e	f	LENGTH (mm)	NO. REQ'D.	UNIT WEIGHT (kg/m)	WEIGHT (Kg.) GRADE 60
PIER 14	C1a	36	1	500	13250	2275				13750	42	7.991	4614.80
	C1b	36	1	500	10475	2275				10975	42	7.991	3683.45
	C1c	36	1	500	13250	2275				13750	42	7.991	4614.80
	C1d	36	1	500	10475	2275				10975	42	7.991	3683.45
	C2	20	2	1375	335	925	250			6826	318	2.466	5352.85
	C3	20	4	1940	240	2330				4510	318	2.466	3536.69
	C3a	20	4	2540	240	1730				4510	318	2.466	3536.69
	C4	20	4	2075	295	2600				4970	318	2.466	3897.41
	C4a	20	4	2675	295	2000				4970	318	2.466	3897.41
	C5	20	3	1850	1955	250				8110	159	2.466	3179.88
	C6	20	3	1850	315	250				4830	318	2.466	3787.63
	C7	36	1	500	10475	2275				10975	12	7.991	1052.41
	C7a	36	1	500	13250	2275				13750	12	7.991	1318.52
										TOTAL WEIGHT		=	46,156.00 Kgs.
PIER 21	C1a	36	1	500	13250	2275				13750	42	7.991	4614.80
	C1b	36	1	500	10475	2275				10975	42	7.991	3683.45
	C1c	36	1	500	13250	2275				13750	42	7.991	4614.80
	C1d	36	1	500	10475	2275				10975	42	7.991	3683.45
	C2	20	2	1375	335	925	250			6826	318	2.466	5352.85
	C3	20	4	1940	240	2330				4510	318	2.466	3536.69
	C3a	20	4	2540	240	1730				4510	318	2.466	3536.69
	C4	20	4	2075	295	2600				4970	318	2.466	3897.41
	C4a	20	4	2675	295	2000				4970	318	2.466	3897.41
	C5	20	3	1850	1955	250				8110	159	2.466	3179.88
	C6	20	3	1850	315	250				4830	318	2.466	3787.63
	C7	36	1	500	10475	2275				10975	12	7.991	1052.41
	C7a	36	1	500	13250	2275				13750	12	7.991	1318.52
										TOTAL WEIGHT		=	46,156.00 Kgs.

THE REINFORCEMENT SHOWN ON THIS TABLE IS FOR REFERENCE ONLY. THE CONTRACTOR SHOULD CHECK AND VERIFY ALL DIMENSIONS, SIZES AND QUANTITIES OF REINFORCEMENT.

JICA
JAPAN INTERNATIONAL COOPERATION AGENCY
KEI KATAHIRA & ENGINEERS INTERNATIONAL
YEO YACHIYO ENGINEERING CO., LTD.

	DATE	SIGNATURE
DESIGNED	9/21/02	M. SUNAVAL
CHECKED	9/23/02	J. C. SANTOS
SUBMITTED	10/14/02	M. KIKUCHI TEAM LEADER

REPUBLIC OF THE PHILIPPINES
DEPARTMENT OF PUBLIC WORKS AND HIGHWAYS

FUHL – PMO	BUREAU OF DESIGN		OFFICE OF THE SECRETARY	
Submitted By:	Reviewed By:	Recommended By:	Recommended By: (See cover sheet for Signature)	Approved By: (See cover sheet for Signature/Approval)
DANILO C. TRAJANO	ADRIANO N. DOROY	GILBERTO S. REYES	MANUEL M. BONDAN	SIMEON A. DATUMANONG
Project Director	Chief, Bridges Division	Director IV (OIC)	Undersecretary	Secretary

PROJECT AND LOCATION :
THE DETAILED DESIGN STUDY ON UPGRADING INTER-URBAN HIGHWAY SYSTEM ALONG THE PAN-PHILIPPINE HIGHWAY (Plaridel, Cabanatuan and San Jose Bypasses)
PLARIDEL BYPASS · CONTRACT PACKAGE III

SCALE : AS SHOWN
FULL SIZE A1

SHEET CONTENTS :
BRIDGE NO. 8 ANGAT RIVER BRIDGE
COLUMN REINFORCEMENT DETAIL (PIER 14 & PIER 21)
(INITIAL STAGE)

SHEET NO. : B8M-51

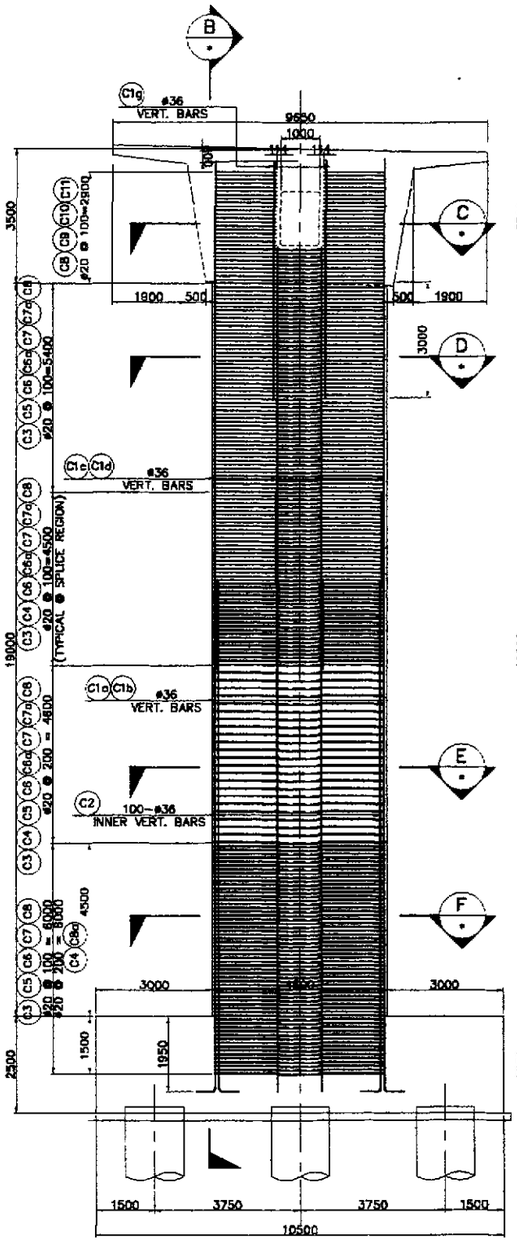

A ELEVATION
SCALE 1:80

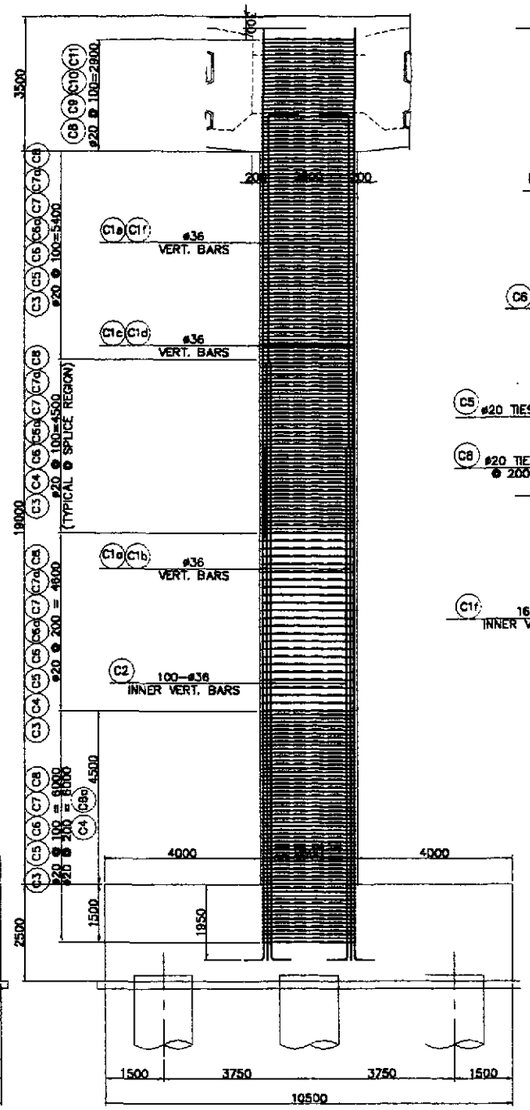

C SECTION
SCALE 1:80

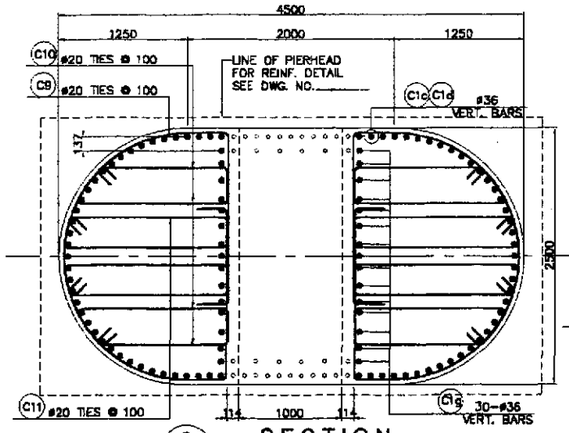

C SECTION
SCALE 1:30

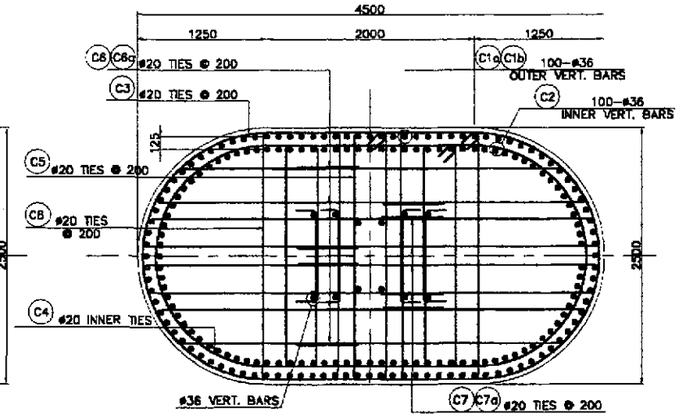

E SECTION
SCALE 1:30

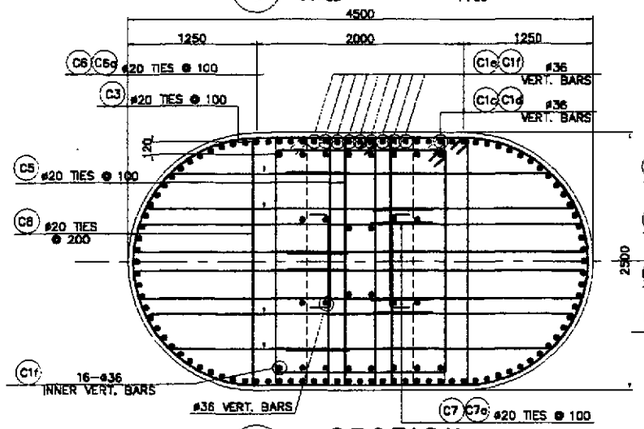

D SECTION
SCALE 1:30

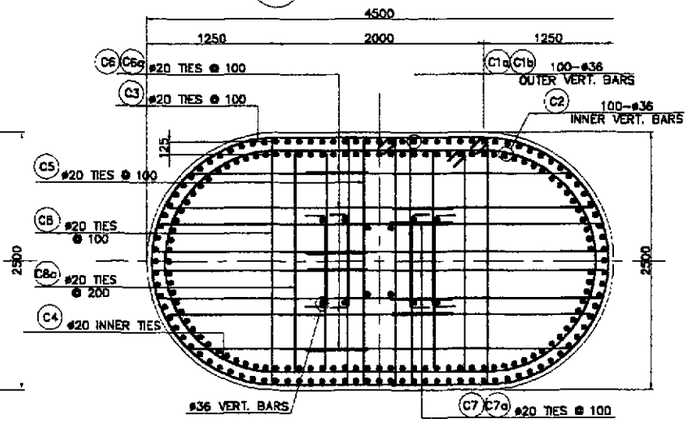

F SECTION
SCALE 1:30

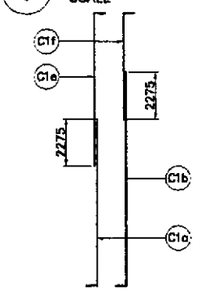

G SCHEMATIC DIAGRAM SHOWING SPLICE
NOT TO SCALE

BAR BENDING DIAGRAM

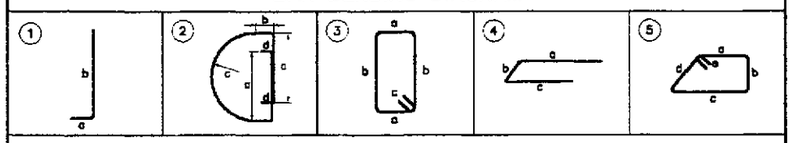

SCHEDULE OF REINFORCEMENT

LOCATION	BAR MARK	SIZE (mm)	BEND TYPE	DIMENSION(mm) OUT TO OUT a	b	c	d	e	f	LENGTH (mm)	NO. REQ'D.	UNIT WEIGHT (kg/m)	WEIGHT (Kg.) GRADE 60
PIER 15 & PIER 20	C1a	36	1	500	13225	2275				13725	50	7.991	5483.82
	C1b	36	1	500	15500	2275				16000	50	7.991	6392.80
	C1c	36	STR	12875						12875	50	7.991	5144.21
	C1d	36	STR	10925						10925	50	7.991	4365.08
	C1e	36	1	500	10900					11400	9	7.991	819.88
	C1f	36	1	500	8525					9125	25	7.991	1822.95
	C1g	36	STR	6000						6000	30	7.991	1438.38
	C2	36	1	500	15500					16000	100	7.991	12985.60
	C3	20	2	1525	710	1175	250			886[illegible]	369	2.466	804[illegible].25
	C4	20	2	1500	510	1050	250			7819	138	2.466	2650.75
	C5	20	3	300	2350	250				5800	191	2.466	273[illegible].83
	C6	20	4	2815	345	1975				5135	382	2.466	4837.23
	C6a	20	4	2220	345	2575				5140	382	2.466	4841.94
	C7	20	4	2925	300	2270				5495	382	2.466	5176.36
	C7a	20	4	2325	300	2870				5495	382	2.466	4413.33
	C8	20	3	2085	2350	250				9370	191	2.466	4320.90
	C8a	20	3	1820	2100	250				7940	69	2.466	1351.02
	C9	20	2	1825	275	1175	250			799[illegible]	38	2.466	748.86
	C10	20	5	1090	345	1335	425	250		3695	76	2.466	692.50
	C11	20	5	1390	415	1445	435	250		3935	76	2.466	737.48
									TOTAL WEIGHT FOR (1)PIER			=	79,861.80 Kgs.
									TOTAL WEIGHT FOR (2)PIERS			=	159,723.20 Kgs.

THE REINFORCEMENT SHOWN ON THIS TABLE IS FOR REFERENCE ONLY. THE CONTRACTOR SHOULD CHECK AND VERIFY ALL DIMENSIONS, SIZES AND QUANTITIES OF REINFORCEMENT.

SCHEDULE OF DIMENSIONS COLUMN (TYPE-1)

PIER	H (mm)
PIER 15	19000
PIER 20	19000

1 COLUMN REINFORCEMENT DETAILS (PIER 15 & PIER 20)
SCALE AS SHOWN

JICA
JAPAN INTERNATIONAL COOPERATION AGENCY
KEI KATAHIRA & ENGINEERS INTERNATIONAL
YEC YACHIYO ENGINEERING CO., LTD.

	DATE	SIGNATURE
DESIGNED	9/21/02	
CHECKED	9/23/02	J. F. SANTOS
SUBMITTED	10/4/02	TEAM LEADER

REPUBLIC OF THE PHILIPPINES
DEPARTMENT OF PUBLIC WORKS AND HIGHWAYS

FUHL - PMO	BUREAU OF DESIGN		OFFICE OF THE SECRETARY	
Submitted By:	Reviewed By:	Recommended By:	Recommended By: (See cover sheet for Signature)	Approved By: (See cover sheet for Signature/Approval)
DANILO C. TRAJANO	ADRIANO M. DOROY	GILBERTO S. REYES	MANUEL M. BONOAN	SIMEON A. DATUMANONG
Project Director	Chief, Bridges Division	Director IV (OIC)	Undersecretary	Secretary

PROJECT AND LOCATION :
THE DETAILED DESIGN STUDY ON UPGRADING INTER-URBAN HIGHWAY SYSTEM ALONG THE PAN-PHILIPPINE HIGHWAY (Plaridel, Cabanatuan and San Jose Bypasses)
PLARIDEL BYPASS - CONTRACT PACKAGE III

SCALE : AS SHOWN
FULL SIZE A1

SHEET CONTENTS :
BRIDGE NO. 8 ANGAT RIVER BRIDGE
COLUMN REINFORCEMENT DETAILS (PIER 15 & PIER 20)
(INITIAL STAGE)

SHEET NO. : B8M-52

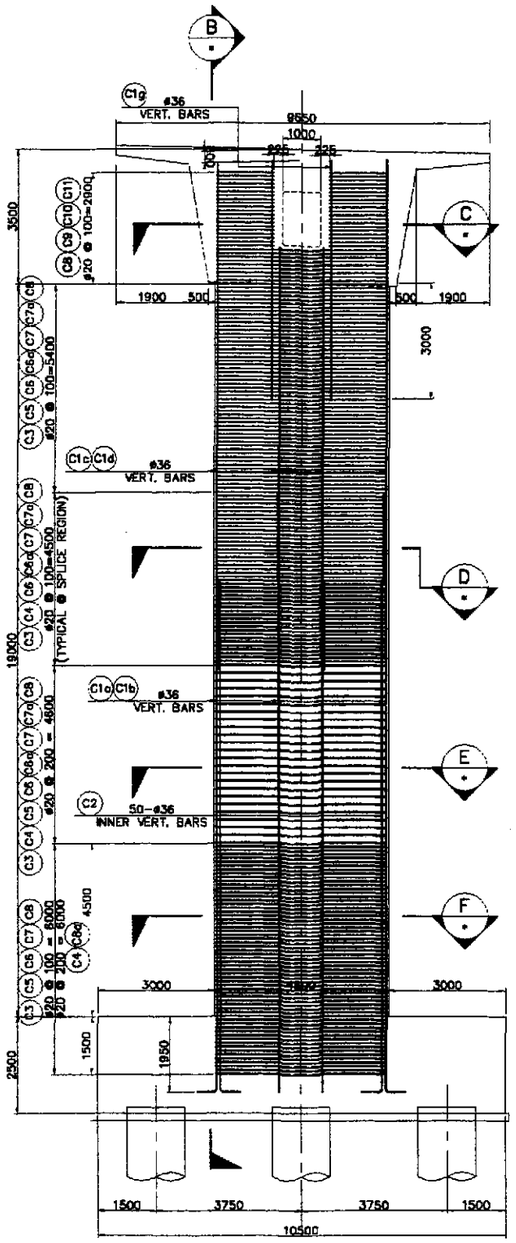

A - SCALE 1:80 ELEVATION

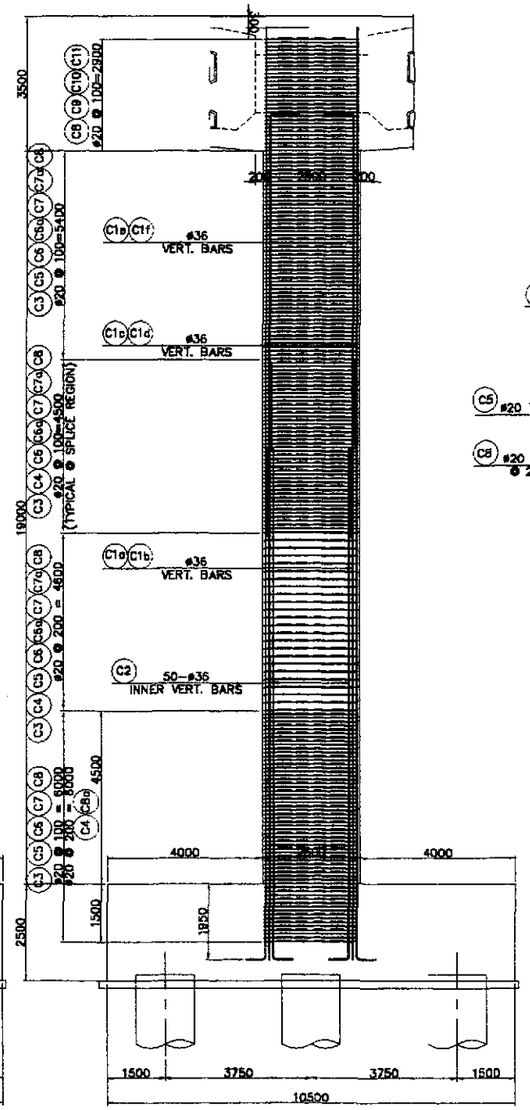

C - SCALE 1:80 SECTION

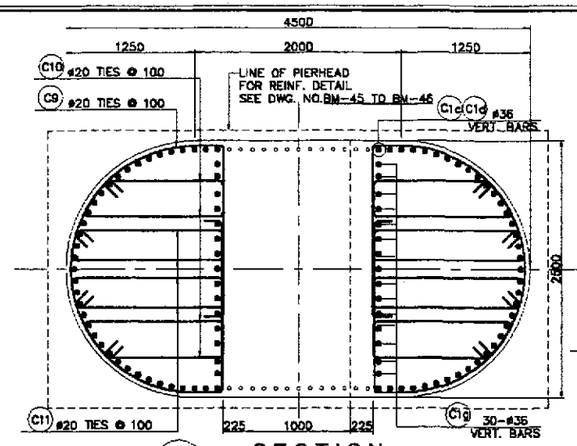

C - SCALE 1:30 SECTION

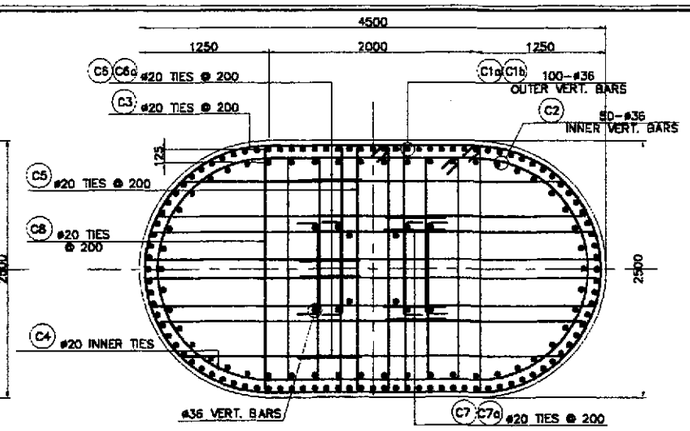

E - SCALE 1:30 SECTION

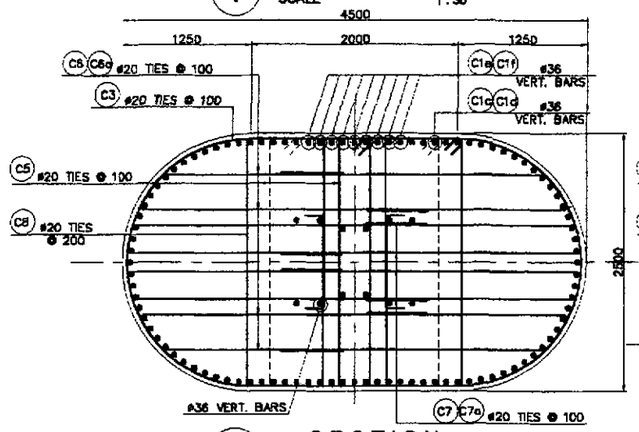

D - SCALE 1:30 SECTION

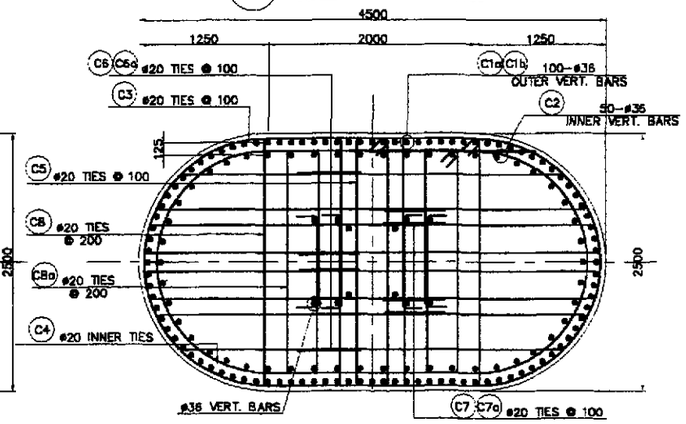

F - SCALE 1:30 SECTION

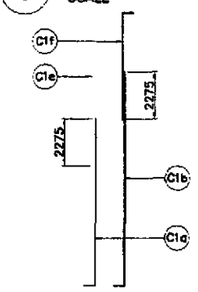

G - NOT TO SCALE SCHEMATIC DIAGRAM SHOWING SPLICE

BAR BENDING DIAGRAM

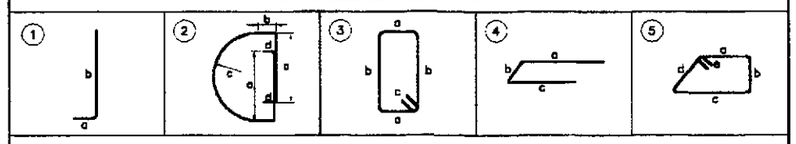

SCHEDULE OF REINFORCEMENT

LOCATION	BAR MARK	SIZE (mm)	BEND TYPE	DIMENSION(mm) OUT TO OUT a	b	c	d	e	f	LENGTH (mm)	NO. REQ'D.	UNIT WEIGHT (kg/m)	WEIGHT (Kg.) GRADE 60
PIER 16, PIER 17, PIER 18 & PIER 19	C1a	36	1	500	13225	2275				13725	50	7.991	5483.82
	C1b	36	1	500	15500	2275				16000	50	7.991	6392.80
	C1c	36	STR	12875						12875	50	7.991	5144.21
	C1d	36	STR	10925						10925	50	7.991	4365.08
	C1e	36	1	500	10900					11400	9	7.991	819.88
	C1f	36	1	500	8625					9125	9	7.991	656.26
	C1g	36	STR	8000						8000	30	7.991	1438.38
	C2	36	1	500	15500					16000	50	7.991	6392.80
	C3	20	2	1625	710	1775	250			8867	368	2.468	8047.25
	C4	20	2	1500	510	1050	250			7819	138	2.468	2660.76
	C5	20	3	300	2350	250				5800	191	2.468	2737.83
	C6	20	4	2815	345	1975				5135	382	2.468	4837.23
	C6a	20	4	2220	345	2575				5140	382	2.468	4841.94
	C7	20	4	2925	300	2270				5495	382	2.468	5176.36
	C7a	20	4	2325	300	2870				5495	382	2.468	5176.36
	C8	20	3	2085	2350	250				9370	191	2.468	4413.33
	C8a	20	3	1820	2100	250				7940	69	2.468	1351.02
	C9	20	2	1625	275	1775	250			7997	38	2.468	748.86
	C10	20	5	1090	345	1335	425	250		3695	76	2.468	692.50
	C11	20	5	1390	300	1445	425	250		3935	76	2.468	737.48
									TOTAL WEIGHT FOR (1)PIER				= 72,092.15 Kgs.
									TOTAL WEIGHT FOR (4)PIERS				= 288,368.60 Kgs.

THE REINFORCEMENT SHOWN ON THIS TABLE IS FOR REFERENCE ONLY. THE CONTRACTOR SHOULD CHECK AND VERIFY ALL DIMENSIONS, SIZES AND QUANTITIES OF REINFORCEMENT.

SCHEDULE OF DIMENSIONS COLUMN (TYPE-2)

PIER	H (mm)
PIER 16	19000
PIER 17	19000
PIER 18	19000
PIER 19	19000

1 - SCALE AS SHOWN COLUMN REINFORCEMENT DETAILS (PIER 16 to PIER 19)

JICA
JAPAN INTERNATIONAL COOPERATION AGENCY
KEI KATAHIRA & ENGINEERS INTERNATIONAL
YEO YACHIYO ENGINEERING CO., LTD.

	DATE	SIGNATURE
DESIGNED	9/21/02	M. S. NAVAL
CHECKED	9/23/02	J. C. SANTOS
SUBMITTED	10/14/02	M. KOBAYASHI TEAM LEADER

REPUBLIC OF THE PHILIPPINES
DEPARTMENT OF PUBLIC WORKS AND HIGHWAYS

P.M.L. – PMO	BUREAU OF DESIGN		OFFICE OF THE SECRETARY	
Submitted By:	Reviewed By:	Recommended By:	Recommended By: (See cover sheet for Signature)	Approved By: (See cover sheet for Signature/Approval)
DANILO C. TRAJANO, Project Director	ADRIANO M. DOROY, Chief, Bridges Division	GILBERTO S. REYES, Director IV (OIC)	MANUEL M. BONOAN, Undersecretary	SIMEON A. DATUMANONG, Secretary

PROJECT AND LOCATION :
THE DETAILED DESIGN STUDY ON UPGRADING INTER-URBAN HIGHWAY SYSTEM ALONG THE PAN-PHILIPPINE HIGHWAY (Plaridel, Cabanatuan and San Jose Bypasses)
PLARIDEL BYPASS - CONTRACT PACKAGE III

SCALE : AS SHOWN
FULL SIZE A1

SHEET CONTENTS :
BRIDGE NO. 8 ANGAT RIVER BRIDGE
COLUMN REINFORCEMENT DETAILS (PIER 16 TO PIER 19)
(INITIAL STAGE)

SHEET NO. : B8M-53

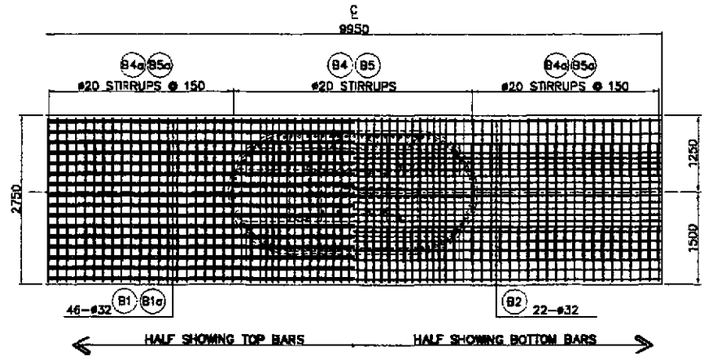

C PLAN
SCALE 1:50

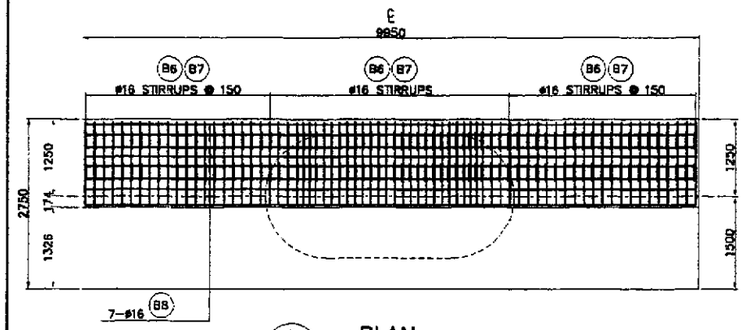

B PLAN
SCALE 1:50

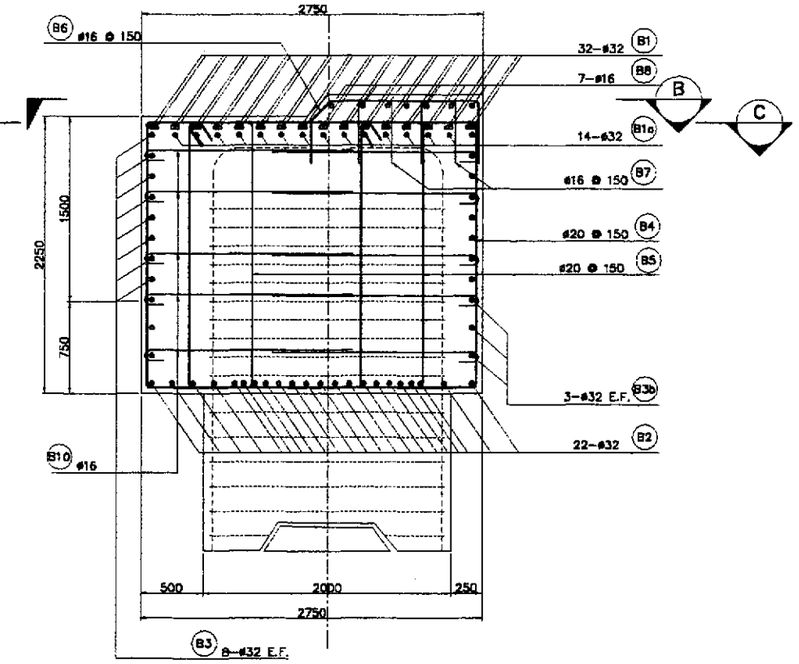

D SECTION
SCALE 1:25

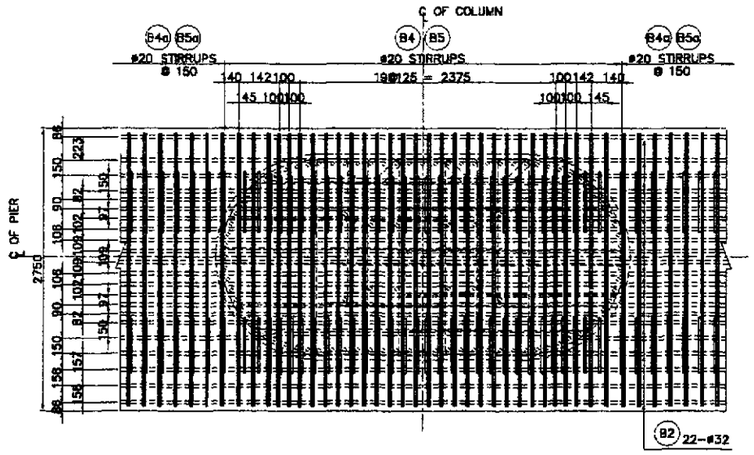

F DETAIL
SCALE 1:30

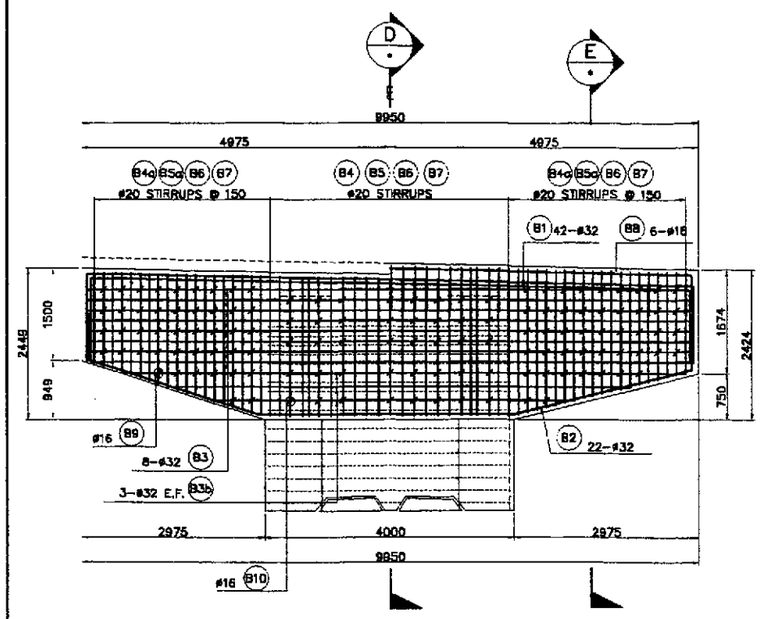

A ELEVATION
SCALE 1:50

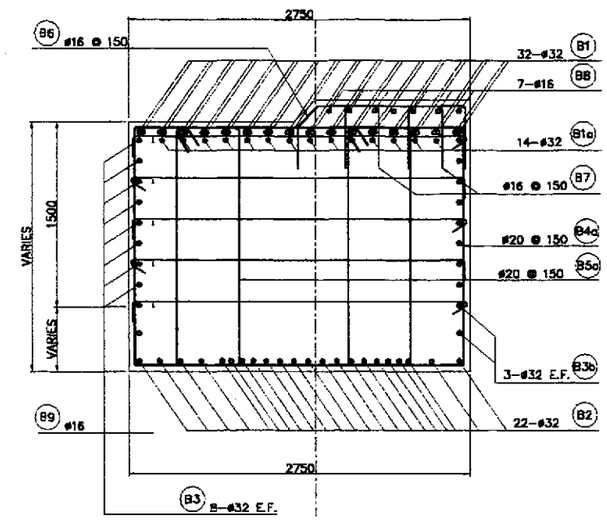

E SECTION
SCALE 1:25

1 COPING REINFORCEMENT DETAILS (PIER 14 & PIER 21)
SCALE AS SHOWN

BAR BENDING DIAGRAM

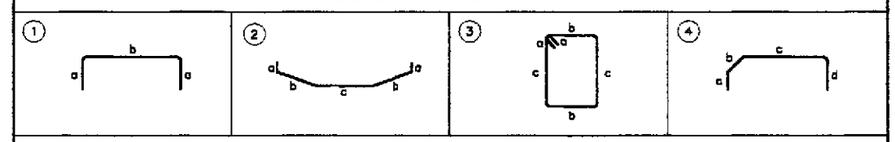

SCHEDULE OF REINFORCEMENT

LOCATION	BAR MARK	SIZE (mm)	BEND TYPE	DIMENSION(mm) OUT TO OUT a	b	c	d	e	f	LENGTH (mm)	NO. REQ'D.	UNIT WEIGHT (kg/m)	WEIGHT GRADE 60 (kg.)	WEIGHT GRADE 40 (kg.)
(PIER14 & PIER 21)	B1	32	1	9850	660					11170	32	6.313	2256.62	
	B1a	32	STR	9680						9680	14	6.313	855.54	
	B2	32	2	660	3020	4000				11380	22	6.313	1577.74	
	B3	32	1	9850	1000					11850	16	6.313	1196.94	
	B3b	32	3	9850(max) 5000(min)	1000	1650				9925	6	6.313	375.94	
	B4	20	3	250	2400	2150				10100	23	2.466	572.85	
	B4a	20	3	250	2400	2100(max) 1400(min)				9300	38	2.466	871.48	
	B5	20	3	250	500	2150				5800	46	2.466	657.93	
	B5a	20	3	250	500	2100(max) 1400(min)				5000	76	2.466	937.08	
	B6	16	1	400	900					1700	61	1.579		163.74
	B7	16	1	400	180					9800	122	1.579		188.79
	B8	16	STR	9800						9800	6	1.579		92.85
										TOTAL WEIGHT	=		6302.03 Kgs.	
										TOTAL WEIGHT	=			480.85 Kgs.
										TOTAL WEIGHT FOR 2 PIERS	=		18604.06 Kgs.	
										TOTAL WEIGHT FOR 2 PIERS	=			921.59 Kgs.

THE REINFORCEMENT SHOWN ON THIS TABLE IS FOR REFERENCE ONLY. THE CONTRACTOR SHOULD CHECK AND VERIFY ALL DIMENSIONS, SIZES AND QUANTITIES OF REINFORCEMENT.

JICA
JAPAN INTERNATIONAL COOPERATION AGENCY
KEI KATAHIRA & ENGINEERS INTERNATIONAL
YEC YACHIYO ENGINEERING CO., LTD.

	DATE	SIGNATURE
DESIGNED	9/21/02	A. S. Hamid
CHECKED	9/23/02	J. C. Santos
SUBMITTED	10/14/02	M. Kitada, TEAM LEADER

REPUBLIC OF THE PHILIPPINES
DEPARTMENT OF PUBLIC WORKS AND HIGHWAYS

PUHL – PMO	BUREAU OF DESIGN		OFFICE OF THE SECRETARY	
Submitted By:	Reviewed By:	Recommended By:	Recommended By: (See cover sheet for Signature)	Approved By: (See cover sheet for Signature/Approval)
DANILO C. TRAJANO, Project Director	ADRIANO M. DOROY, Chief, Bridges Division	GILBERTO S. REYES, Director IV (OIC)	MANUEL M. BONDAN, Undersecretary	SIMEON A. DATUMANONG, Secretary

PROJECT AND LOCATION :
THE DETAILED DESIGN STUDY ON UPGRADING INTER-URBAN HIGHWAY SYSTEM ALONG THE PAN-PHILIPPINE HIGHWAY (Plaridel, Cabanatuan and San Jose Bypasses)
PLARIDEL BYPASS - CONTRACT PACKAGE III

SCALE : AS SHOWN
FULL SIZE A1

SHEET CONTENTS :
BRIDGE NO. 8 ANGAT RIVER BRIDGE
COPING REINFORCEMENT DETAILS (PIER 14 & PIER 21)
(INITIAL STAGE)

SHEET NO. : B8M-54

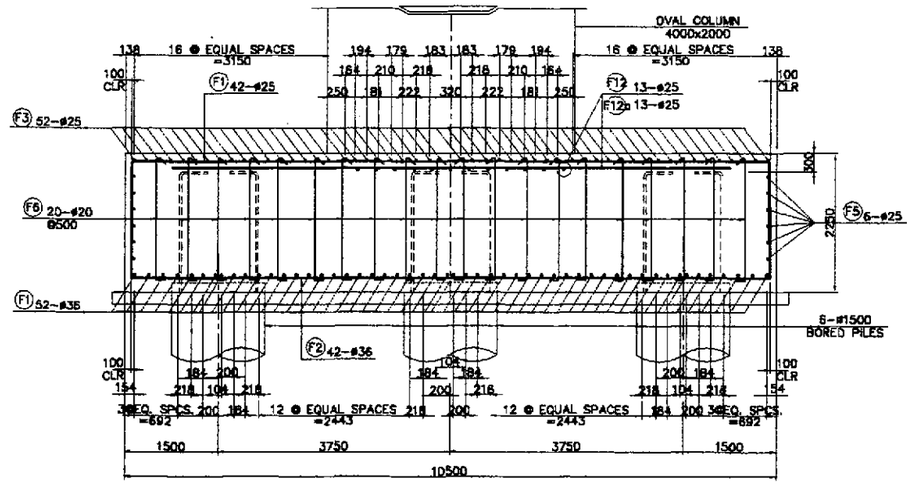

1 SECTION
SCALE 1:50

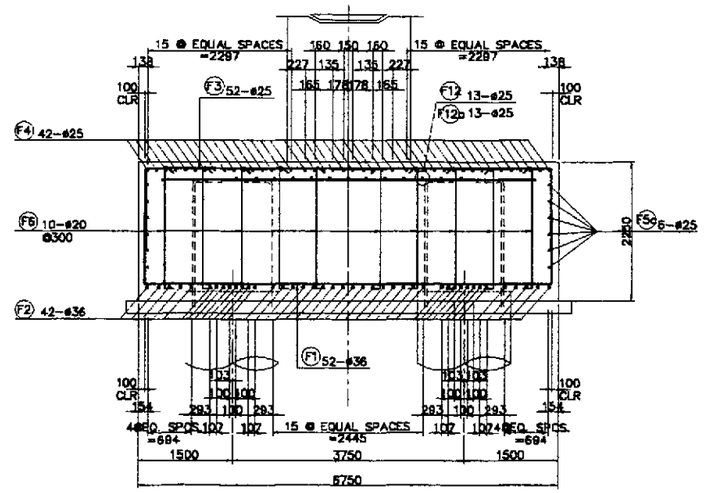

2 SECTION
SCALE 1:50

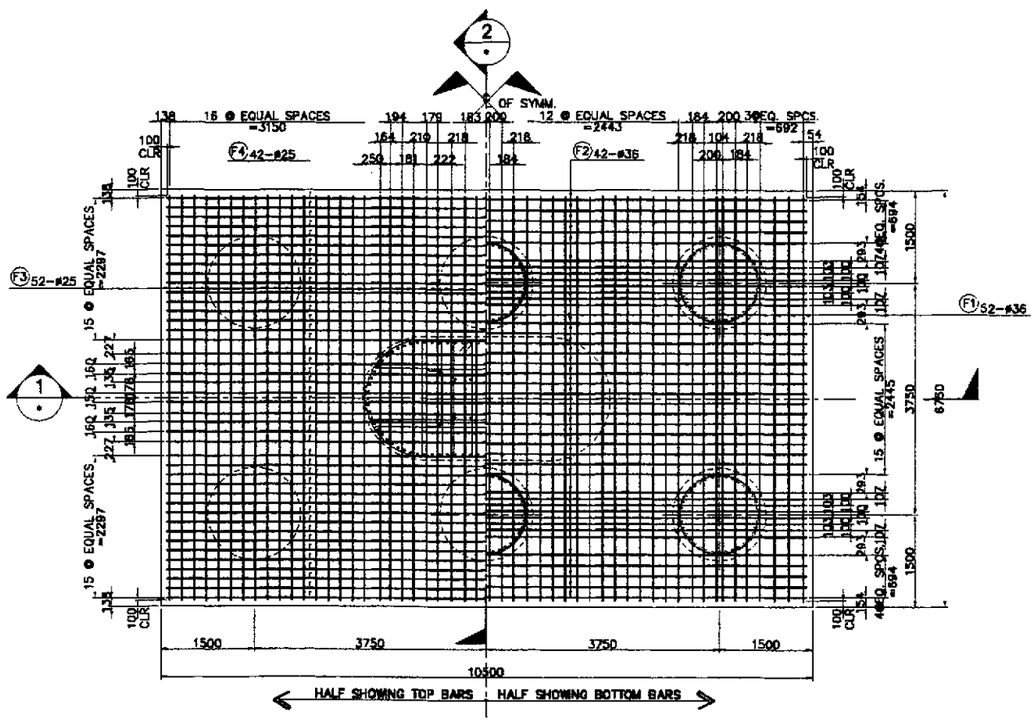

A PLAN
SCALE 1:50

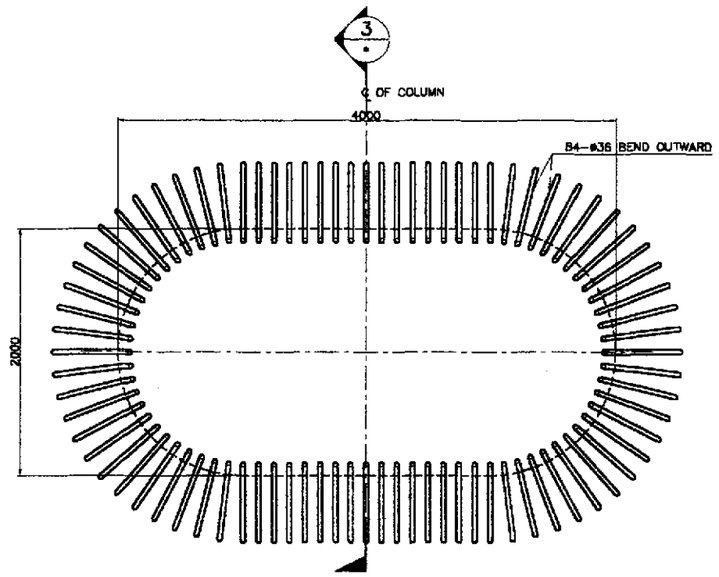

B DETAIL OF COLUMN MAIN BAR ARRANGEMENT @ BOTTOM
SCALE 1:25

A PILE CAP REINFORCEMENT DETAILS (P14 & P21)
SCALE AS SHOWN

JICA JAPAN INTERNATIONAL COOPERATION AGENCY KEI KATAHIRA & ENGINEERS INTERNATIONAL YEO YACHIYO ENGINEERING CO., LTD.		DATE	SIGNATURE	REPUBLIC OF THE PHILIPPINES DEPARTMENT OF PUBLIC WORKS AND HIGHWAYS	PROJECT AND LOCATION :	SCALE :	SHEET CONTENTS :
	DESIGNED	9/2/02	M. S. NAVAL	FUNL - PMO / BUREAU OF DESIGN / OFFICE OF THE SECRETARY	THE DETAILED DESIGN STUDY ON UPGRADING INTER-URBAN HIGHWAY SYSTEM ALONG THE PAN-PHILIPPINE HIGHWAY (Plaridel, Cabanatuan and San Jose Bypasses)	AS SHOWN	BRIDGE NO. 8 ANGAT RIVER BRIDGE PILE CAP REINFORCEMENT DETAILS (P 14 & P21) - 1 OF 2 (INITIAL STAGE)
	CHECKED	9/23/02	J. C. SANTOS	Submitted By: DANILO C. TRAJANO, Project Director; Reviewed By: ADRIANO M. DOROY, Chief, Bridges Division; Recommended By: GILBERTO S. REYES, Director IV (OIC); Recommended By: (See cover sheet for Signature) MANUEL M. BONGAN, Undersecretary; Approved By: (See cover sheet for Signature/Approval) SIMEON A. DATUMANONG, Secretary	PLARIDEL BYPASS - CONTRACT PACKAGE III	FULL SIZE A1	SHEET NO. : B8M-55
	SUBMITTED	10/14/02	M. KUNO TEAM LEADER				

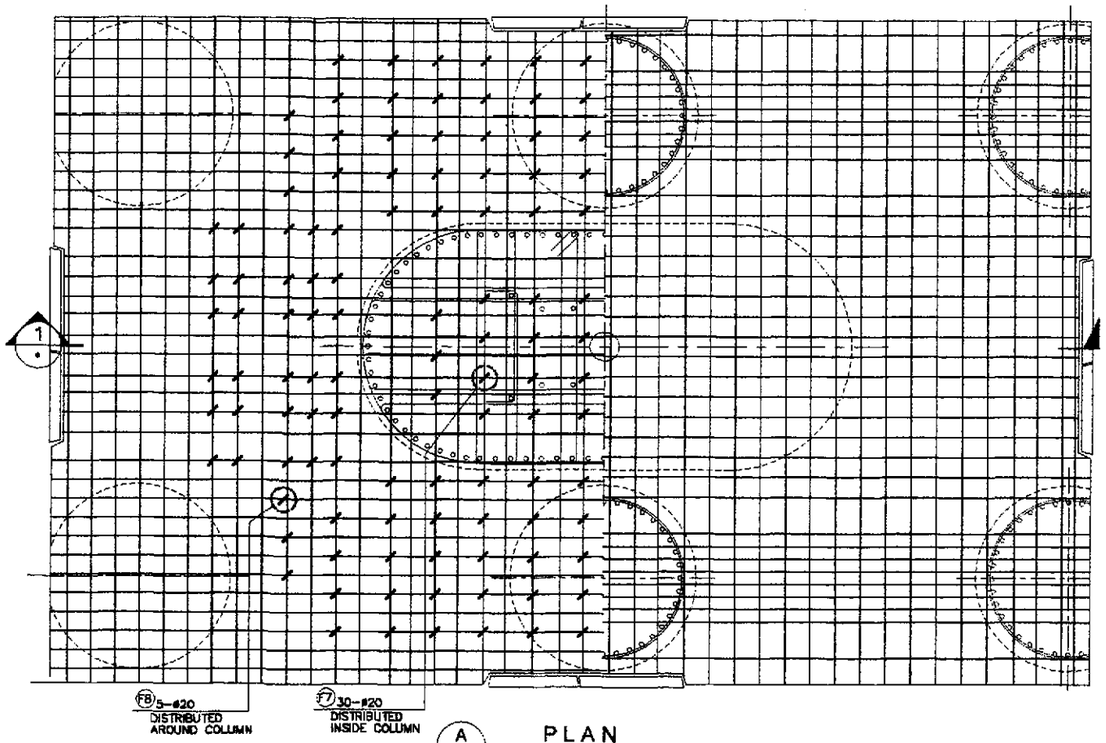

A PLAN
SCALE 1:25

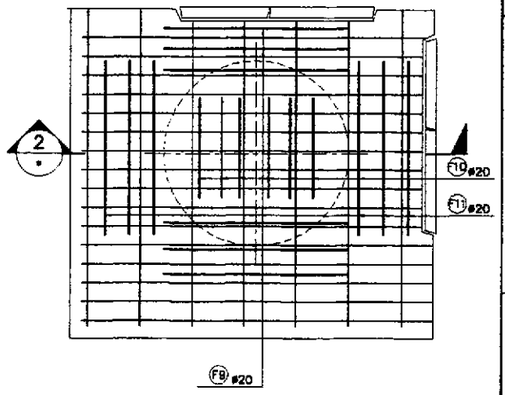

TYPICAL ON PILE-PILECAP CONNECTION

B PLAN
SCALE 1:25

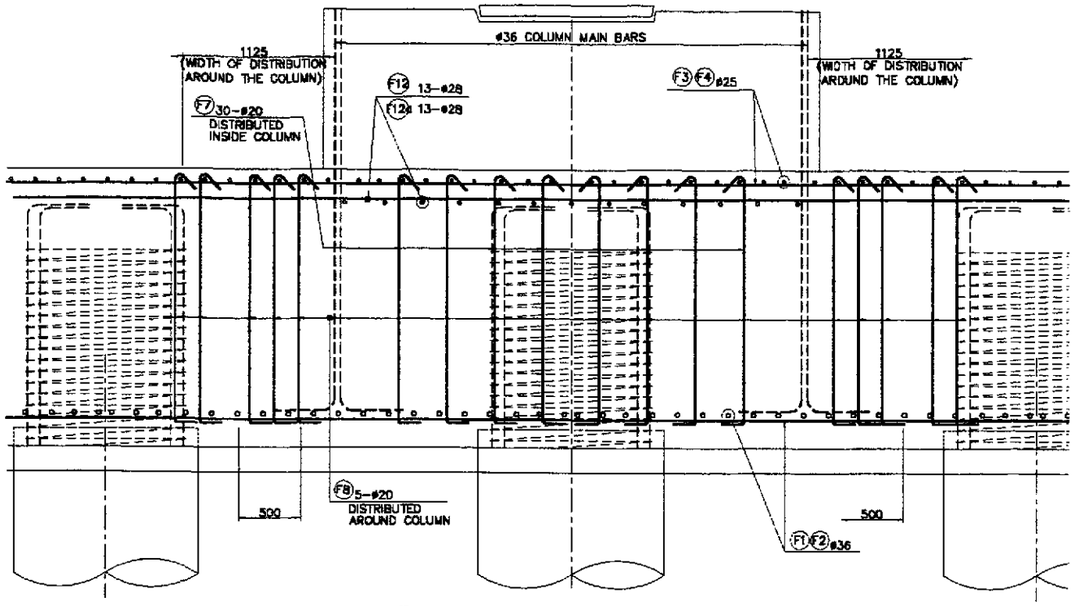

1 SECTION
SCALE 1:25

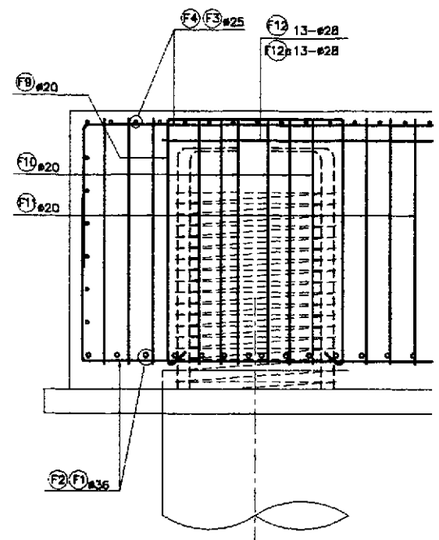

2 SECTION
SCALE 1:25

A PILE CAP REINFORCEMENT DETAILS (P14 & P21)
SCALE AS SHOWN

BAR BENDING DIAGRAM

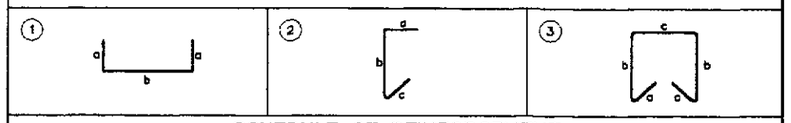

SCHEDULE OF REINFORCEMENT

LOCATION	BAR MARK	SIZE (mm)	BEND TYPE	DIMENSION(mm) OUT TO OUT a	b	c	d	e	f	LENGTH (mm)	NO. REQ'D.	UNIT WEIGHT (kg/m)	WEIGHT (Kg.) GRADE 60
PIER 14	F1	36	1	1100	6550					8750	52	7.991	3635.91
	F2	36	1	1100	10300					12500	42	7.991	4195.28
	F3	25	1	1100	6550					8750	52	3.854	1753.57
	F4	25	1	1100	10300					12500	42	3.854	2023.35
	F5	25	STR	10000						10000	12	3.854	462.48
	F5a	25	STR	6300						6300	12	3.854	291.36
	F6	20	2	175	1950	175				2300	188	2.466	1066.30
	F7	20	2	175	1950	175				2300	30	2.466	170.15
	F8	20	2	175	1950	175				2300	192	2.466	1088.99
	F9	20	3	175	1950	175				2300	36	2.466	204.18
	F10	20	3	175	1950	175				2300	36	2.466	204.18
	F11	20	3	175	1950	175				2300	36	2.466	204.18
	F12	28	STR	9000						9000	13	4.833	565.46
	F12a	28	STR	6000						6000	13	4.833	376.97
										TOTAL WEIGHT		=	16242.37 Kgs.
PIER 21	F1	36	1	1100	6550					8750	52	7.991	3635.91
	F2	36	1	1100	10300					12500	42	7.991	4195.28
	F3	25	1	1100	6550					8750	52	3.854	1753.57
	F4	25	1	1100	10300					12500	42	3.854	2023.35
	F5	25	STR	10000						10000	12	3.854	462.48
	F5a	25	STR	6300						6300	12	3.854	291.36
	F6	20	2	175	1950	175				2300	188	2.466	1066.30
	F7	20	2	175	1950	175				2300	30	2.466	170.15
	F8	20	2	175	1950	175				2300	192	2.466	1088.99
	F9	20	3	175	1950	175				2300	36	2.466	204.18
	F10	20	3	175	1950	175				2300	36	2.466	204.18
	F11	20	3	175	1950	175				2300	36	2.466	204.18
	F12	28	STR	9000						9000	13	4.833	565.46
	F12a	28	STR	6000						6000	13	4.833	376.97
										TOTAL WEIGHT		=	16242.37 Kgs.
										TOTAL WEIGHT FOR (2) PIERS		=	32484.74 Kgs.

THE REINFORCEMENT SHOWN ON THIS TABLE IS FOR REFERENCE ONLY. THE CONTRACTOR SHOULD CHECK AND VERIFY ALL DIMENSIONS, SIZES AND QUANTITIES OF REINFORCEMENT.

JICA
JAPAN INTERNATIONAL COOPERATION AGENCY
KEI KATAHIRA & ENGINEERS INTERNATIONAL
YEC YACHIYO ENGINEERING CO., LTD.

	DATE	SIGNATURE
DESIGNED	9/21/02	A. S. [illegible]
CHECKED	9/23/02	J. E. SANTOS
SUBMITTED	10/14/02	[illegible] TEAM LEADER

REPUBLIC OF THE PHILIPPINES
DEPARTMENT OF PUBLIC WORKS AND HIGHWAYS

PUHL – PMO	BUREAU OF DESIGN		OFFICE OF THE SECRETARY	
Submitted By:	Reviewed By:	Recommended By:	Recommended By: (See cover sheet for Signature)	Approved By: (See cover sheet for Signature/Approval)
DANILO C. TRAJANO	ADRIANO N. DOROY	GILBERTO S. REYES	MANUEL M. BONOAN	SIMEON A. DATUMANONG
Project Director	Chief, Bridges Division	Director IV (OIC)	Undersecretary	Secretary

PROJECT AND LOCATION :
THE DETAILED DESIGN STUDY ON UPGRADING INTER-URBAN HIGHWAY SYSTEM ALONG THE PAN-PHILIPPINE HIGHWAY (Plaridel, Cabanatuan and San Jose Bypasses)
PLARIDEL BYPASS - CONTRACT PACKAGE III

SCALE : AS SHOWN
FULL SIZE A1

SHEET CONTENTS :
BRIDGE NO. 8 ANGAT RIVER BRIDGE
PILE CAP REINFORCEMENT DETAILS (P 14 & P21) - 2 OF 2
(INITIAL STAGE)

SHEET NO. : B8M-56

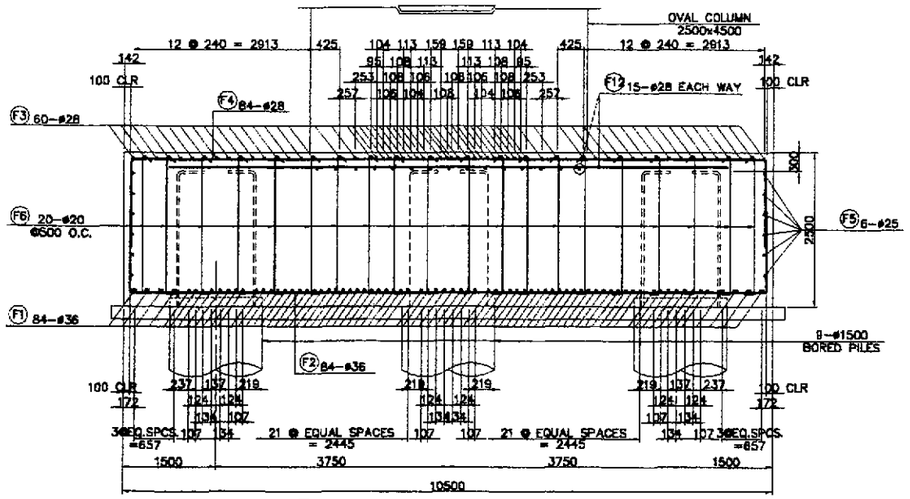

1 SECTION
SCALE 1:50

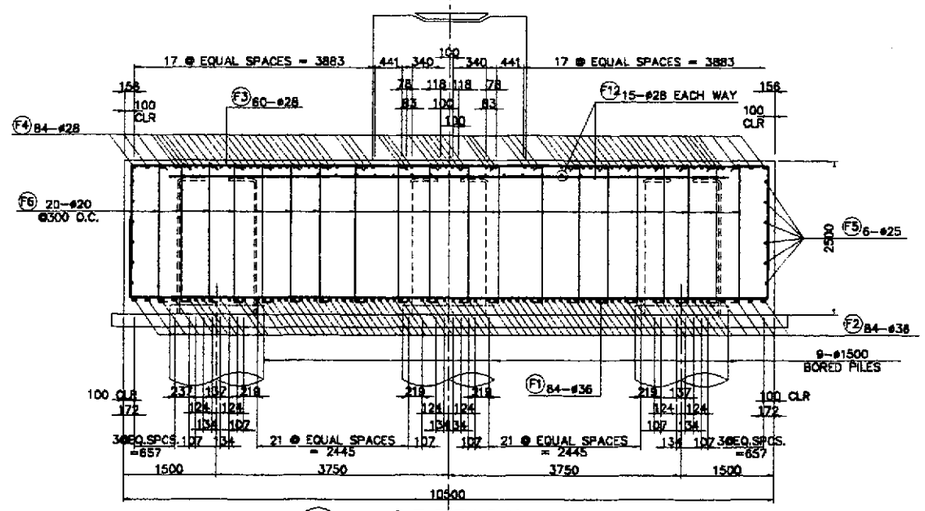

2 SECTION
SCALE 1:50

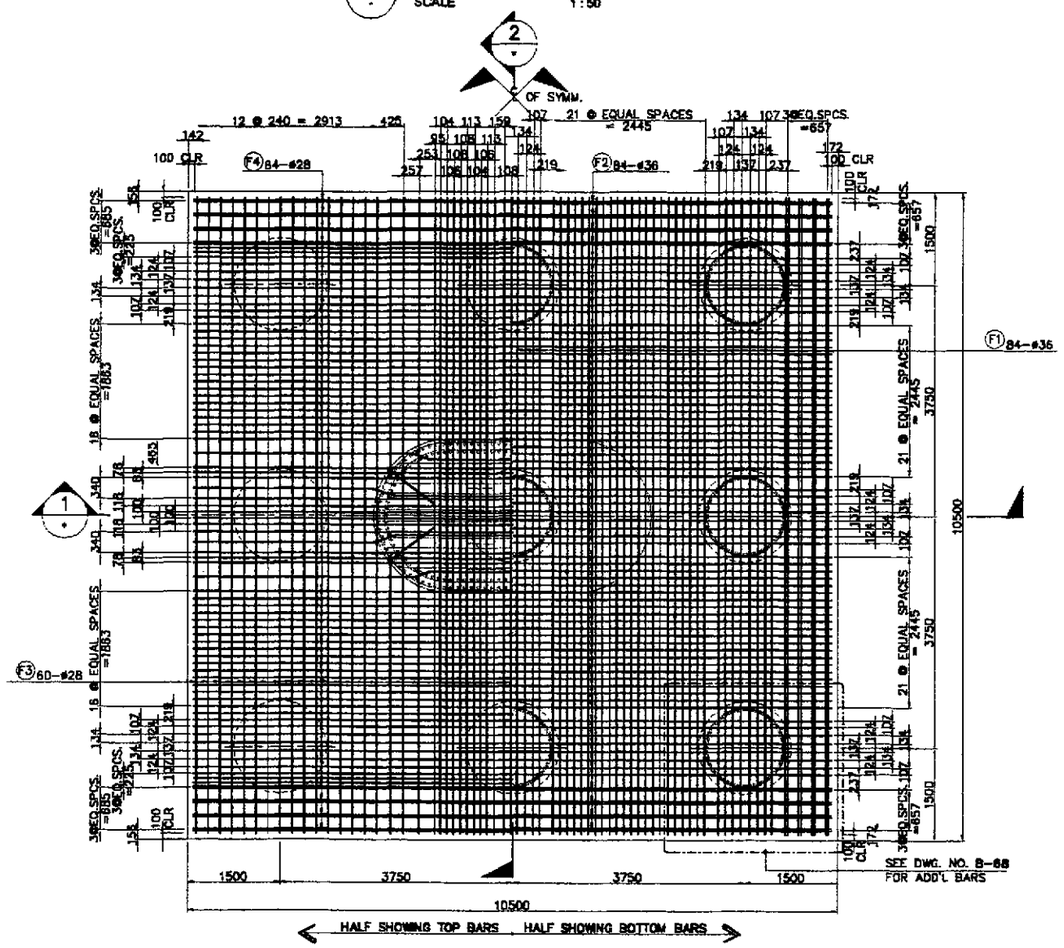

A PLAN
SCALE 1:50

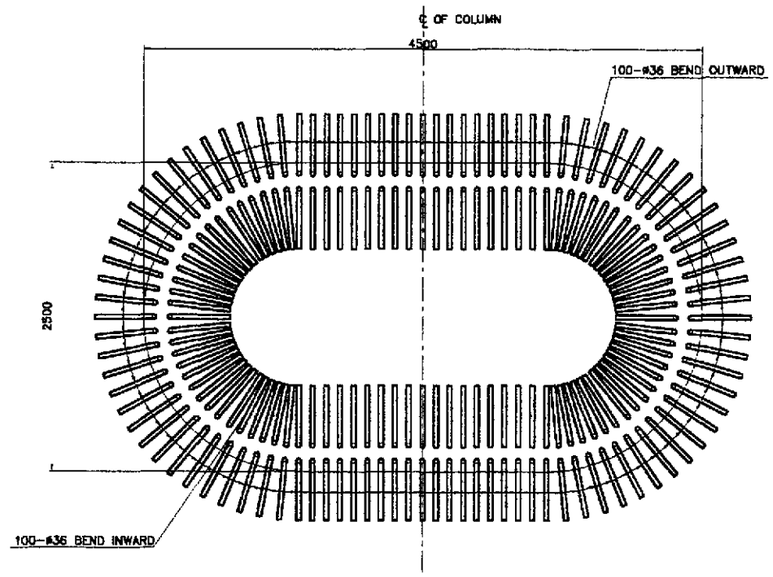

B DETAIL OF COLUMN
MAIN BAR ARRANGEMENT @ BOTTOM
SCALE 1:25

PILE CAP REINFORCEMENT DETAILS (PIER 15 & PIER 20)
SCALE AS SHOWN

JICA
JAPAN INTERNATIONAL COOPERATION AGENCY
KEI KATAHIRA & ENGINEERS INTERNATIONAL
YEC YACHIYO ENGINEERING CO., LTD.

	DATE	SIGNATURE
DESIGNED	9/21/02	M. S. NAVAL
CHECKED	9/23/02	J. C. SANTOS
SUBMITTED	10/14/02	TEAM LEADER

REPUBLIC OF THE PHILIPPINES
DEPARTMENT OF PUBLIC WORKS AND HIGHWAYS

FUHL – PMO	BUREAU OF DESIGN		OFFICE OF THE SECRETARY	
Submitted By:	Reviewed By:	Recommended By:	Recommended By: (See cover sheet for Signature)	Approved By: (See cover sheet for Signature/Approval)
DANILO C. TRAJANO	ADRIANO M. DOROY	GILBERTO S. REYES	MANUEL M. BONDAN	SIMEON A. DATUMANONG
Project Director	Chief, Bridges Division	Director IV (OIC)	Undersecretary	Secretary

PROJECT AND LOCATION :
THE DETAILED DESIGN STUDY ON UPGRADING INTER-URBAN HIGHWAY SYSTEM ALONG THE PAN-PHILIPPINE HIGHWAY (Plaridel, Cabanatuan and San Jose Bypasses)
PLARIDEL BYPASS - CONTRACT PACKAGE III

SCALE : AS SHOWN
FULL SIZE A1

SHEET CONTENTS :
BRIDGE NO. 8 ANGAT RIVER BRIDGE
PILE CAP REINFORCEMENT DETAILS (PIER 15 & PIER 20) - 1 OF 2
(INITIAL STAGE)

SHEET NO. : B8M-57

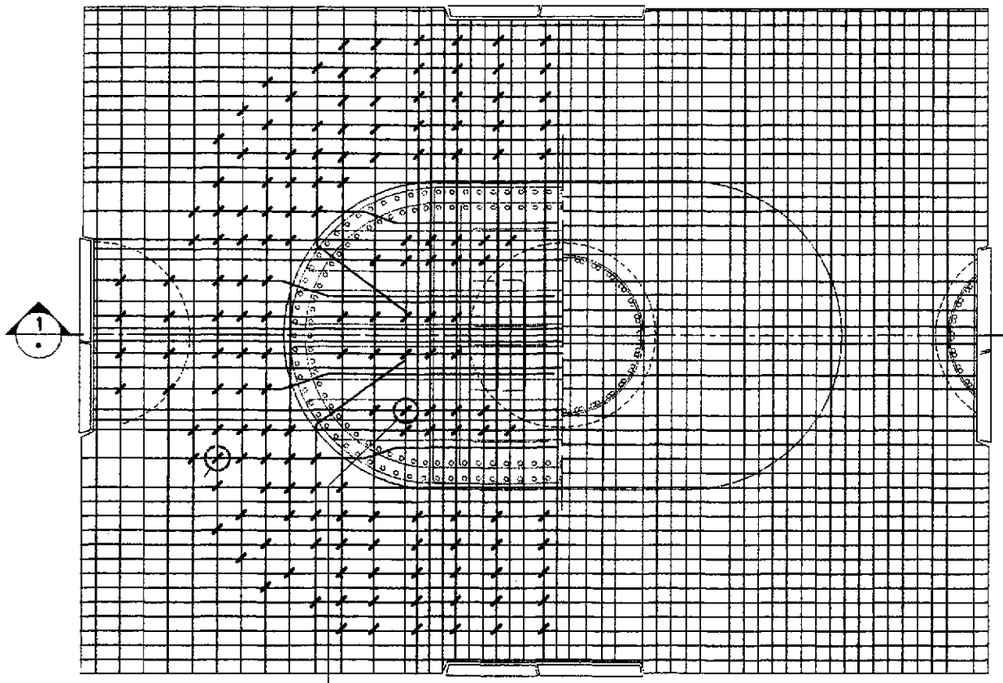

A PLAN
SCALE 1:25

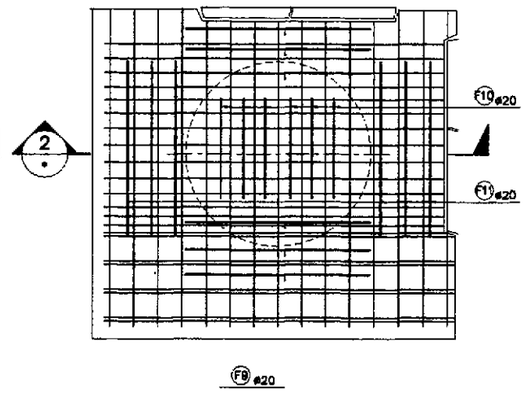

TYPICAL ON PILE-PILECAP CONNECTION

B PLAN
SCALE 1:25

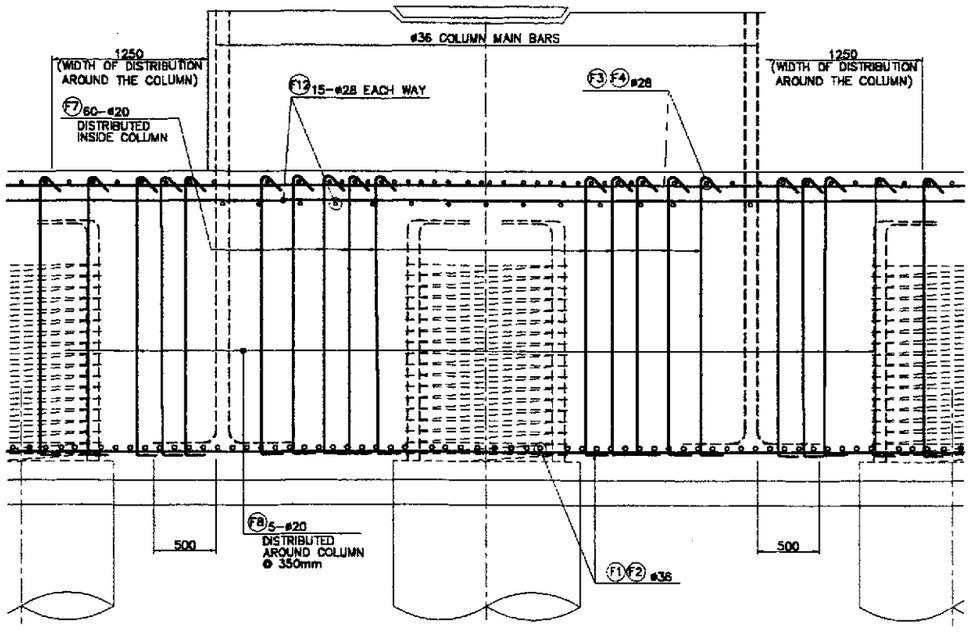

1 SECTION
SCALE 1:25

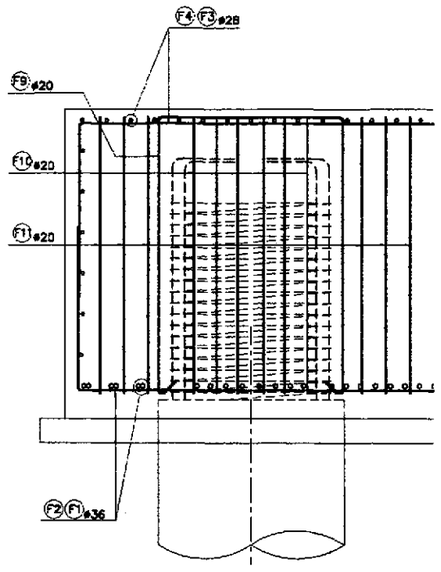

2 SECTION
SCALE 1:25

BAR BENDING DIAGRAM

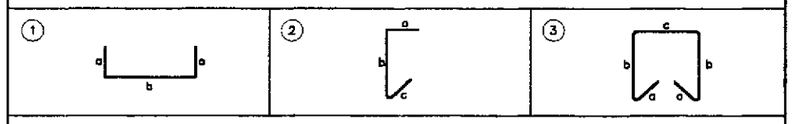

SCHEDULE OF REINFORCEMENT

LOCATION	BAR MARK	SIZE (mm)	BEND TYPE	DIMENSION(mm) OUT TO OUT a	b	c	d	e	f	LENGTH (mm)	NO. REQ'D.	UNIT WEIGHT (kg/m)	WEIGHT (Kg.) GRADE 60
PIER 15	F1	36	1	1100	10300					12500	84	7.991	8390.55
	F2	36	1	1100	10300					12500	84	7.991	8390.55
	F3	28	1	1100	10300					12500	84	4.833	5074.65
	F4	28	1	1100	10300					12500	84	4.833	5074.65
	F5	25	STR	10000						10000	24	3.854	924.96
	F6	20	2	175	2200	175				2550	340	2.466	2138.02
	F7	20	2	175	2200	175				2550	60	2.466	377.30
	F8	20	2	175	2200	175				2550	266	2.466	1672.69
	F9	20	3	175	2200	175				2550	48	2.466	301.84
	F10	20	3	175	2200	175				2550	48	2.466	301.84
	F11	20	3	175	2200	175				2550	48	2.466	301.84
	F12	28	STR	9000						9000	30	4.833	1304.91
										TOTAL WEIGHT		=	34253.80 Kgs.
PIER 20	F1	36	1	1100	10300					12500	84	7.991	8390.55
	F2	36	1	1100	10300					12500	84	7.991	8390.55
	F3	28	1	1100	10300					12500	84	4.833	5074.65
	F4	28	1	1100	10300					12500	84	4.833	5074.65
	F5	25	STR	10000						10000	24	3.854	924.96
	F6	20	2	175	2200	175				2550	340	2.466	2138.02
	F7	20	2	175	2200	175				2550	60	2.466	377.30
	F8	20	2	175	2200	175				2550	266	2.466	1672.69
	F9	20	3	175	2200	175				2550	48	2.466	301.84
	F10	20	3	175	2200	175				2550	48	2.466	301.84
	F11	20	3	175	2200	175				2550	48	2.466	301.84
	F12	28	STR	9000						9000	30	4.833	1304.91
										TOTAL WEIGHT		=	34253.80 Kgs.

THE REINFORCEMENT SHOWN ON THIS TABLE IS FOR REFERENCE ONLY. THE CONTRACTOR SHOULD CHECK AND VERIFY ALL DIMENSIONS, SIZES AND QUANTITIES OF REINFORCEMENT.

- PILE CAP REINFORCEMENT DETAILS (PIER 15 & PIER 20)
SCALE AS SHOWN

JICA
JAPAN INTERNATIONAL COOPERATION AGENCY
KEI KATAHIRA & ENGINEERS INTERNATIONAL
YEC YACHIYO ENGINEERING CO., LTD.

	DATE	SIGNATURE
DESIGNED	9/21/02	W.S. NAVAL
CHECKED	9/23/02	J.C. SANTOS
SUBMITTED	10/14/02	M. KUCHA TEAM LEADER

REPUBLIC OF THE PHILIPPINES
DEPARTMENT OF PUBLIC WORKS AND HIGHWAYS

PUHL – PMO	BUREAU OF DESIGN		OFFICE OF THE SECRETARY	
Submitted By:	Reviewed By:	Recommended By:	Recommended By: (See cover sheet for Signature)	Approved By: (See cover sheet for Signature/Approval)
DANILO C. TRAJANO	ADRIANO M. DOROY	GILBERTO S. REYES	MANUEL M. BONDAN	SIMEON A. DATUMANONG
Project Director	Chief, Bridges Division	Director IV (OIC)	Undersecretary	Secretary

PROJECT AND LOCATION :
THE DETAILED DESIGN STUDY ON UPGRADING INTER-URBAN HIGHWAY SYSTEM ALONG THE PAN-PHILIPPINE HIGHWAY (Plaridel, Cabanatuan and San Jose Bypasses)
PLARIDEL BYPASS - CONTRACT PACKAGE III

SCALE : AS SHOWN
FULL SIZE A1

SHEET CONTENTS :
BRIDGE NO. 8 ANGAT RIVER BRIDGE
PILE CAP REINFORCEMENT DETAILS (PIER 15 & PIER 20) - 2 OF 2
(INITIAL STAGE)

SHEET NO. : B8M-58

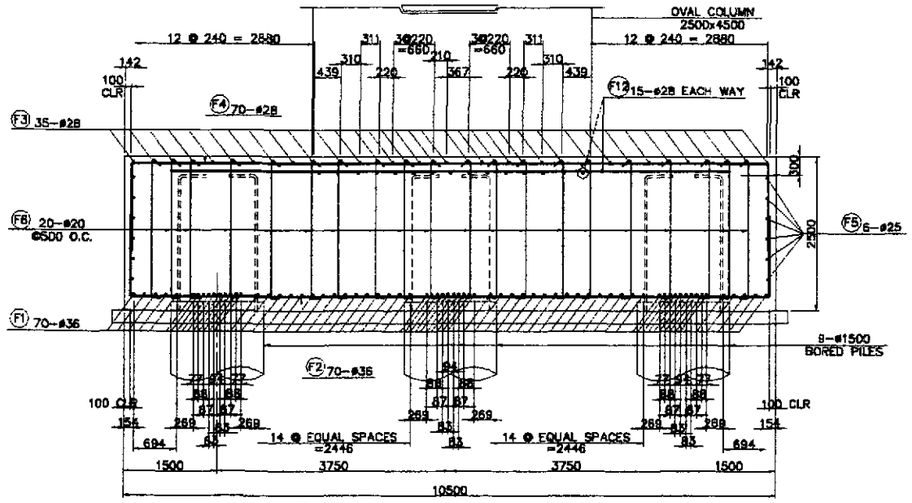

1 SECTION
SCALE 1:50

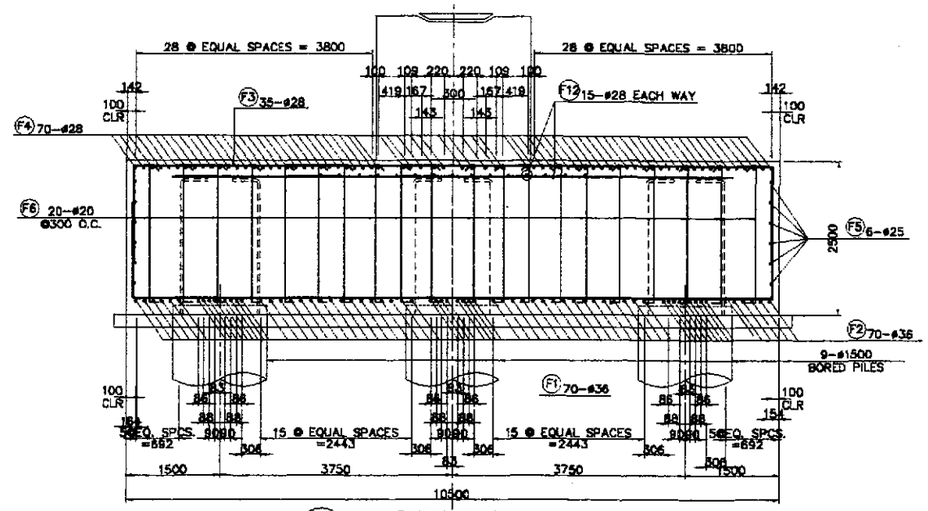

2 SECTION
SCALE 1:50

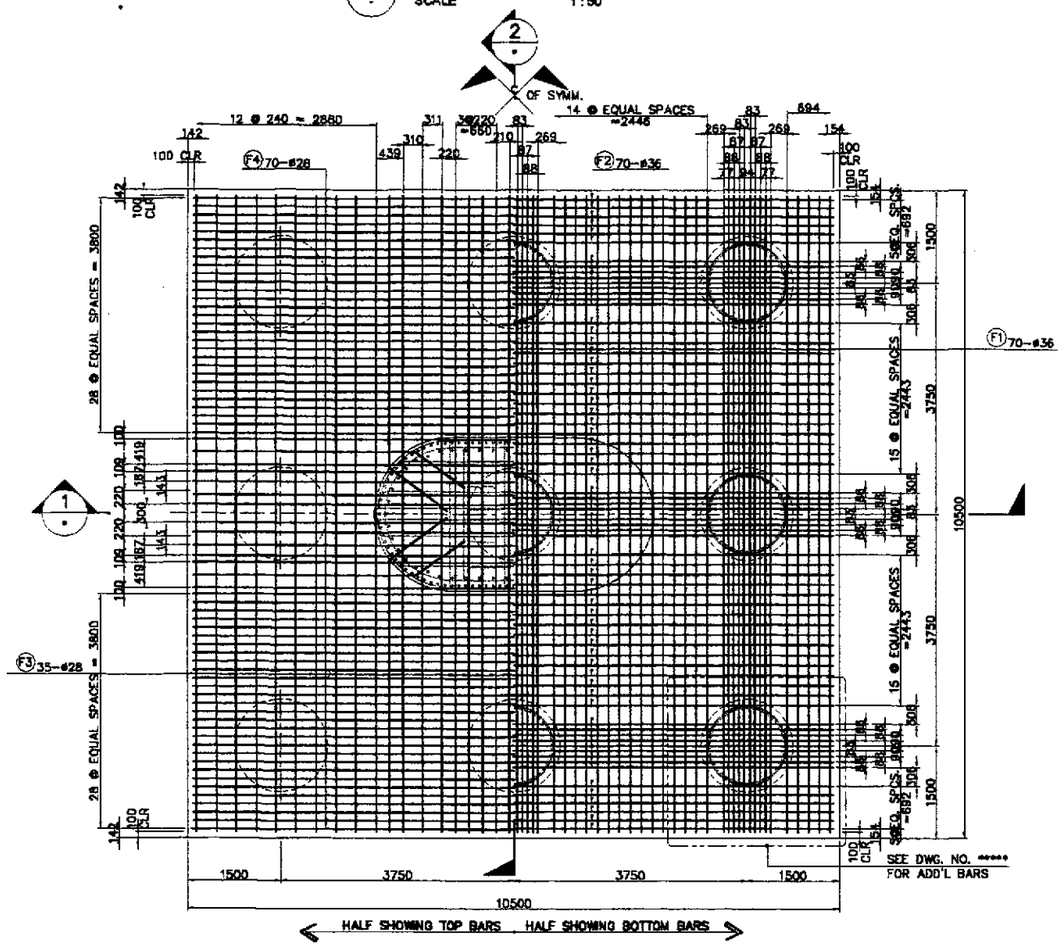

A PLAN
SCALE 1:50

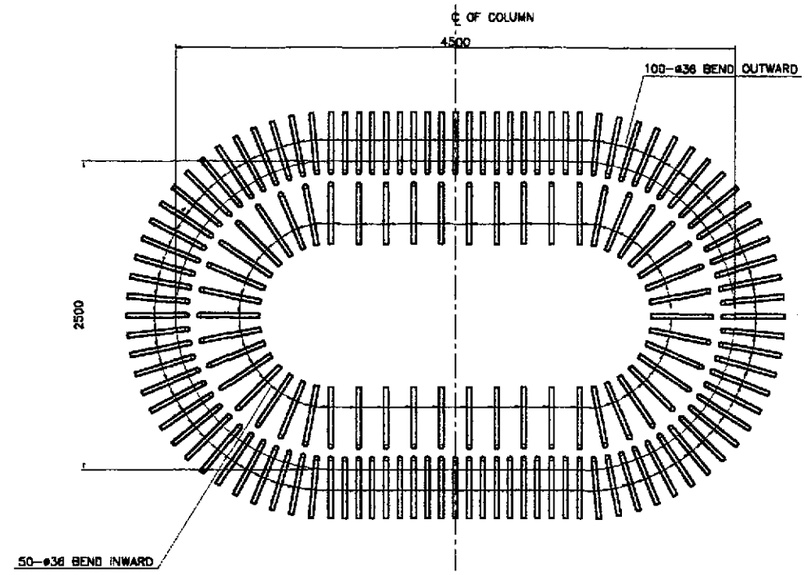

B DETAIL OF COLUMN
MAIN BAR ARRANGEMENT @ BOTTOM
SCALE 1:25

PILE CAP REINFORCEMENT DETAILS (PIER 16 to PIER 19)
SCALE AS SHOWN

JICA JAPAN INTERNATIONAL COOPERATION AGENCY		DATE	SIGNATURE
KEI KATAHIRA & ENGINEERS INTERNATIONAL / YEO YACHIYO ENGINEERING CO., LTD.	DESIGNED	9/2/02	M. SAMANIEGO
	CHECKED	9/23/02	J. C. SANTOS
	SUBMITTED	10/14/02	M. MATSUDA TEAM LEADER

REPUBLIC OF THE PHILIPPINES
DEPARTMENT OF PUBLIC WORKS AND HIGHWAYS

PJHL - PMO	BUREAU OF DESIGN		OFFICE OF THE SECRETARY	
Submitted By:	Reviewed By:	Recommended By:	Recommended By: (See cover sheet for Signature)	Approved By: (See cover sheet for Signature/Approval)
DANILO C. TRAJANO	ADRIANO M. DOROY	GILBERTO S. REYES	MANUEL M. BONDAN	SIMEON A. DATUMANONG
Project Director	Chief, Bridges Division	Director IV (OIC)	Undersecretary	Secretary

PROJECT AND LOCATION :	SCALE :	SHEET CONTENTS :	SHEET NO. :
THE DETAILED DESIGN STUDY ON UPGRADING INTER-URBAN HIGHWAY SYSTEM ALONG THE PAN-PHILIPPINE HIGHWAY (Plaridel, Cabanatuan and San Jose Bypasses)	AS SHOWN	BRIDGE NO. 8 ANGAT RIVER BRIDGE PILE CAP REINFORCEMENT DETAILS (PIER 16 - PIER 19) - 1 OF 2 (INITIAL STAGE)	B8M-59
PLARIDEL BYPASS - CONTRACT PACKAGE III	FULL SIZE A1		

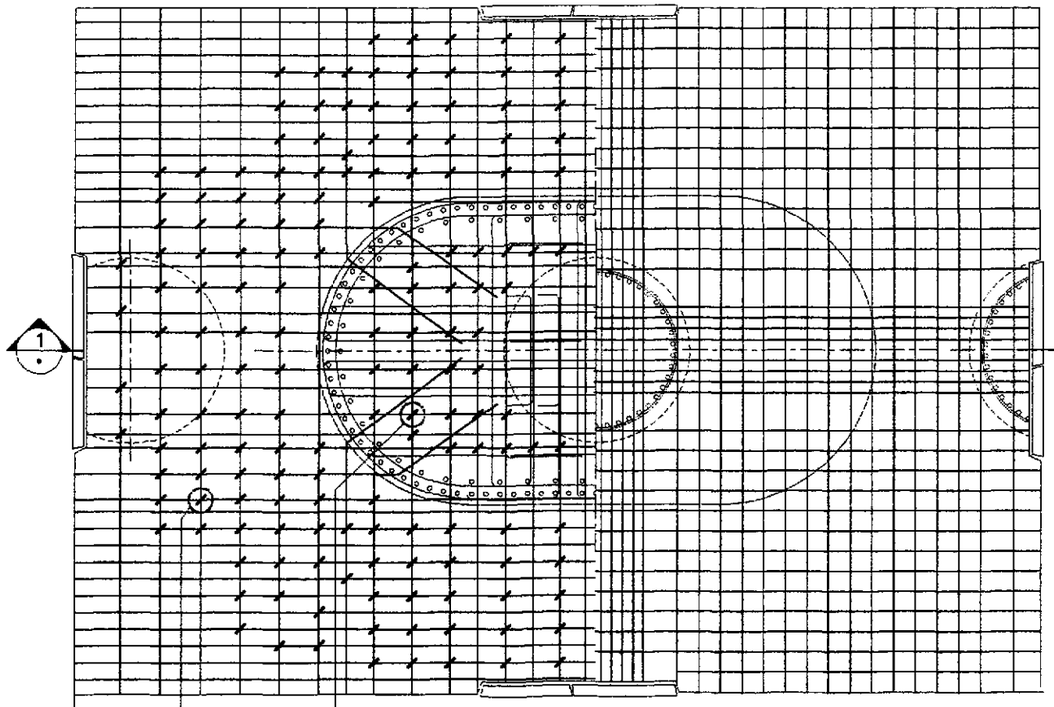

A PLAN
SCALE 1:25

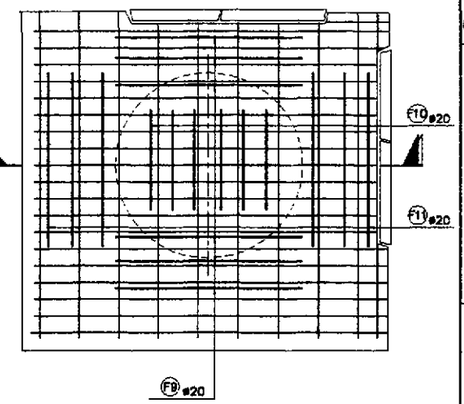

TYPICAL ON PILE-PILECAP CONNECTION

B PLAN
SCALE 1:25

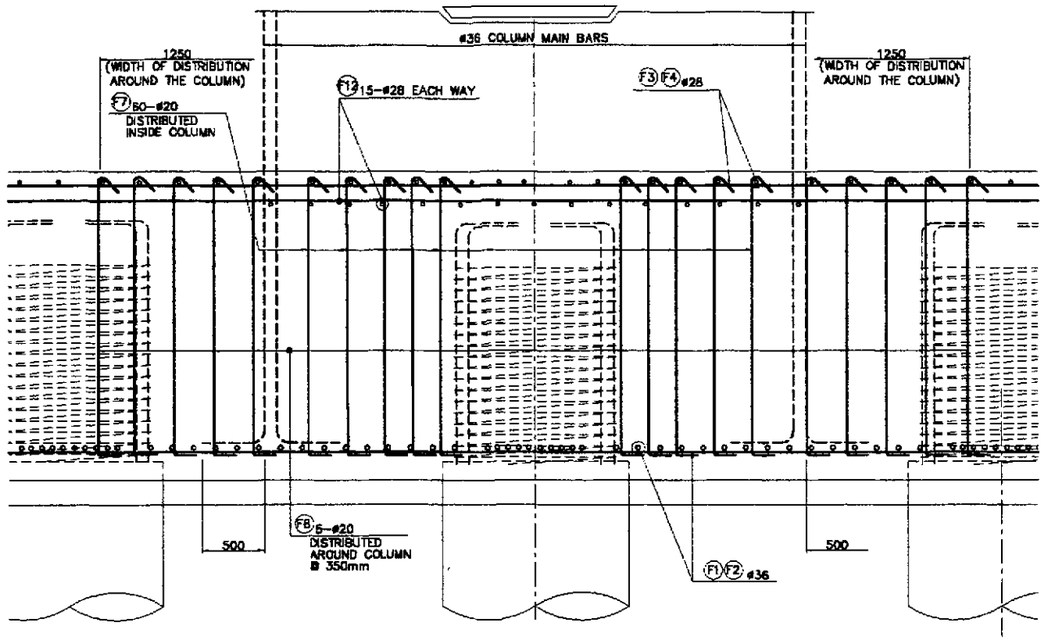

1 SECTION
SCALE 1:25

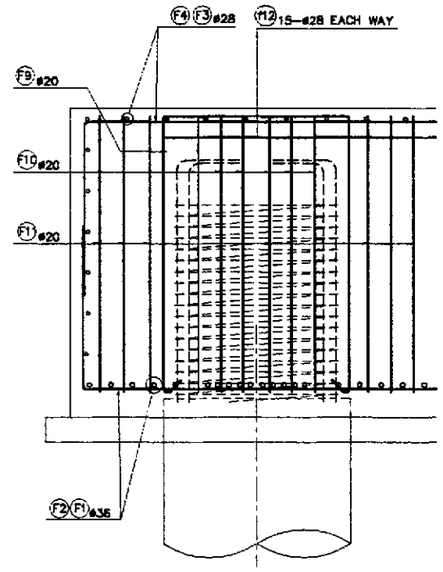

2 SECTION
SCALE 1:25

PILE CAP REINFORCEMENT DETAILS (PIER 16 to PIER 19)
SCALE AS SHOWN

BAR BENDING DIAGRAM

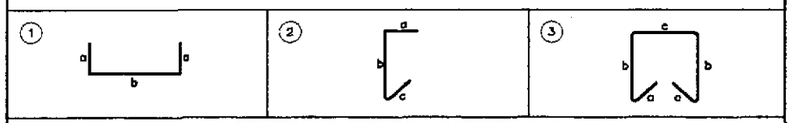

SCHEDULE OF REINFORCEMENT

LOCATION	BAR MARK	SIZE (mm)	BEND TYPE	DIMENSION(mm) OUT TO OUT a	b	c	d	e	f	LENGTH (mm)	NO. REQ'D.	UNIT WEIGHT (kg/m)	WEIGHT (Kg.) GRADE 60
PIER 16	F1	36	1	1100	10300					12500	70	7.991	6992.13
	F2	36	1	1100	10300					12500	70	7.991	6992.13
	F3	28	1	1100	10300					12500	35	4.833	2114.44
	F4	28	1	1100	10300					12500	70	4.833	4228.88
	F5	25	STR	10000						10000	24	3.854	924.96
	F6	20	2	175	2200	175				2550	340	2.466	2138.02
	F7	20	2	175	2200	175				2550	60	2.466	377.30
	F8	20	2	175	2200	175				2550	270	2.466	1697.84
	F9	20	3	175	2200	175				2550	48	2.466	301.84
	F10	20	3	175	2200	175				2550	48	2.466	301.84
	F11	20	3	175	2200	175				2550	48	2.466	301.84
	F12	28	2	9000	2200					9000	30	4.833	1304.91
										TOTAL WEIGHT		=	27676.11 Kgs.
PIER 17	F1	36	1	1100	10300					12500	70	7.991	6992.13
	F2	36	1	1100	10300					12500	70	7.991	6992.13
	F3	28	1	1100	10300					12500	35	4.833	2114.44
	F4	28	1	1100	10300					12500	70	4.833	4228.88
	F5	25	STR	10000						10000	24	3.854	924.96
	F6	20	2	175	2200	175				2550	340	2.466	2138.02
	F7	20	2	175	2200	175				2550	60	2.466	377.30
	F8	20	2	175	2200	175				2550	270	2.466	1697.84
	F9	20	3	175	2200	175				2550	48	2.466	301.84
	F10	20	3	175	2200	175				2550	48	2.466	301.84
	F11	20	3	175	2200	175				2550	48	2.466	301.84
	F12	28	2	9000	2200					9000	30	4.833	1304.91
										TOTAL WEIGHT		=	27676.11 Kgs.
PIER 18	F1	36	1	1100	10300					12500	70	7.991	6992.13
	F2	36	1	1100	10300					12500	70	7.991	6992.13
	F3	28	1	1100	10300					12500	35	4.833	2114.44
	F4	28	1	1100	10300					12500	70	4.833	4228.88
	F5	25	STR	10000						10000	24	3.854	924.96
	F6	20	2	175	2200	175				2550	340	2.466	2138.02
	F7	20	2	175	2200	175				2550	60	2.466	377.30
	F8	20	3	175	2200	175				2550	270	2.466	1697.84
	F9	20	3	175	2200	175				2550	48	2.466	301.84
	F10	20	3	175	2200	175				2550	48	2.466	301.84
	F11	20	2	175	2200	175				2550	48	2.466	301.84
	F12	28	2	9000	2200					9000	30	4.833	1304.91
										TOTAL WEIGHT		=	27676.11 Kgs.
PIER 19	F1	36	1	1100	10300					12500	70	7.991	6992.13
	F2	36	1	1100	10300					12500	70	7.991	6992.13
	F3	28	1	1100	10300					12500	35	4.833	2114.44
	F4	28	1	1100	10300					12500	70	4.833	4228.88
	F5	25	STR	10000						10000	24	3.854	924.96
	F6	20	2	175	2200	175				2550	340	2.466	2138.02
	F7	20	2	175	2200	175				2550	60	2.466	377.30
	F8	20	2	175	2200	175				2550	270	2.466	1697.84
	F9	20	3	175	2200	175				2550	48	2.466	301.84
	F10	20	3	175	2200	175				2550	48	2.466	301.84
	F11	20	3	175	2200	175				2550	48	2.466	301.84
	F12	28	2	9000	2200					9000	30	4.833	1304.91
										TOTAL WEIGHT		=	27676.11 Kgs.
										TOTAL WEIGHT FOR (4) PIERS		=	110704.43 Kgs.

THE REINFORCEMENT SHOWN ON THIS TABLE IS FOR REFERENCE ONLY. THE CONTRACTOR SHOULD CHECK AND VERIFY ALL DIMENSIONS, SIZES AND QUANTITIES OF REINFORCEMENT.

JICA
JAPAN INTERNATIONAL COOPERATION AGENCY
KEI KATAHIRA & ENGINEERS INTERNATIONAL
YEC YACHIYO ENGINEERING CO., LTD.

	DATE	SIGNATURE
DESIGNED	9/21/02	V. S. [illegible]
CHECKED	9/23/02	J. C. SANTOS
SUBMITTED	10/14/02	M. [illegible] TEAM LEADER

REPUBLIC OF THE PHILIPPINES
DEPARTMENT OF PUBLIC WORKS AND HIGHWAYS

PUHL - PMO	BUREAU OF DESIGN		OFFICE OF THE SECRETARY	
Submitted By:	Reviewed By:	Recommended By:	Recommended By: (See cover sheet for Signature)	Approved By: (See cover sheet for Signature/Approval)
DANILO C. TRAJANO	ADRIANO M. DOROY	GILBERTO S. REYES	MANUEL M. BONDAN	SIMEON A. DATUMANONG
Project Director	Chief, Bridges Division	Director IV (OIC)	Undersecretary	Secretary

PROJECT AND LOCATION :
THE DETAILED DESIGN STUDY ON UPGRADING INTER-URBAN HIGHWAY SYSTEM ALONG THE PAN-PHILIPPINE HIGHWAY (Plaridel, Cabanatuan and San Jose Bypasses)
PLARIDEL BYPASS - CONTRACT PACKAGE III

SCALE : AS SHOWN
FULL SIZE A1

SHEET CONTENTS :
BRIDGE NO. 8 ANGAT RIVER BRIDGE
PILE CAP REINFORCEMENT DETAILS (PIER 16 - PIER 19) - 2 OF 2
(INITIAL STAGE)

SHEET NO. : B8M-60

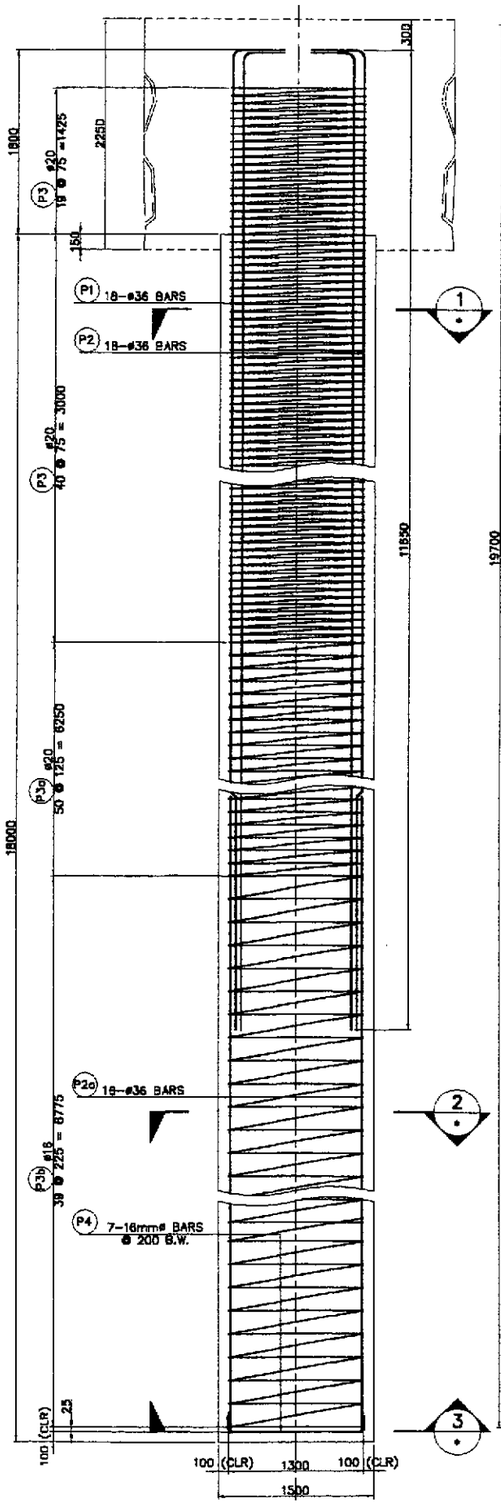

A SCALE 1:30 — ELEVATION

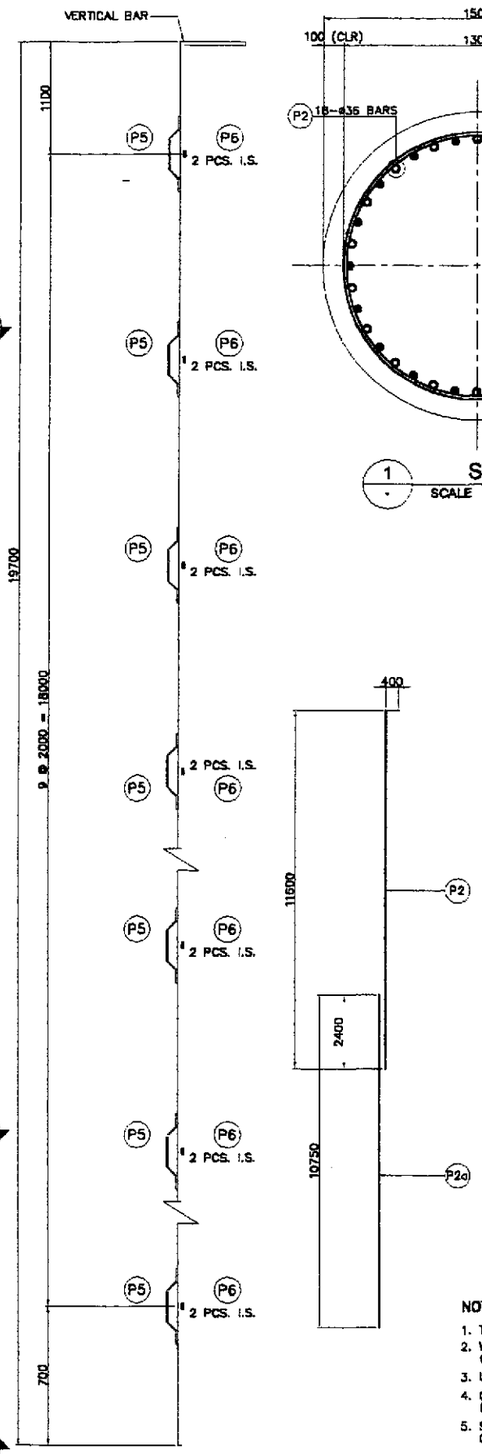

B SCALE 1:30 — LAYOUT OF STIFFENER

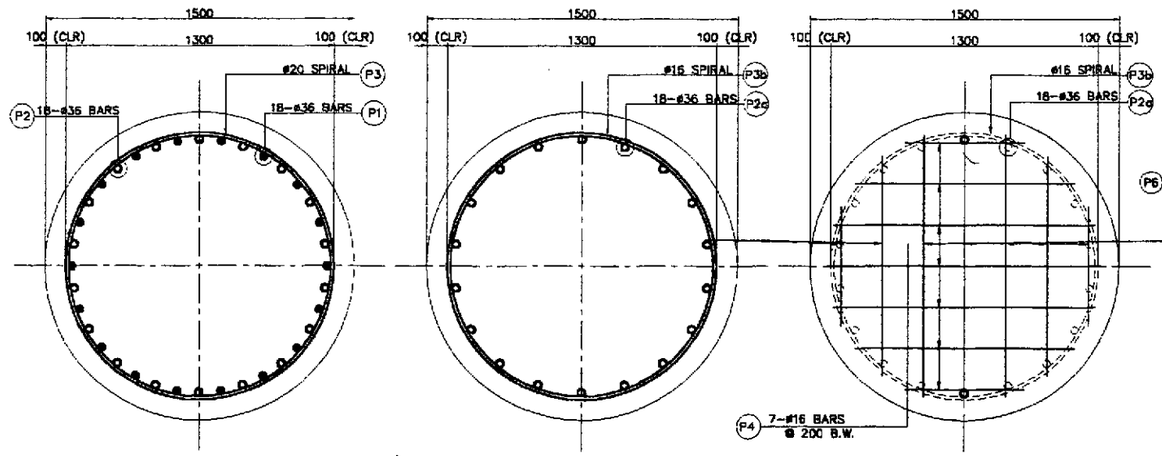

1 SCALE 1:15 — SECTION

2 SCALE 1:15 — SECTION

3 SCALE 1:15 — SECTION

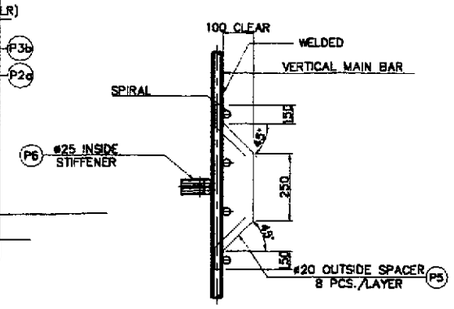

E NOT TO SCALE — DETAIL OF STIFFENER/SPACER

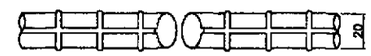

PLAN (BARS BEFORE WELDING)

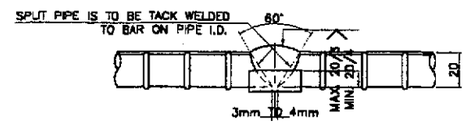

DETAILS OF SINGLE-V-GROOVE BUTT WELD

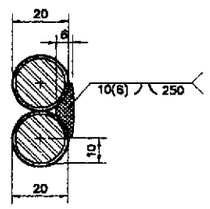

DOUBLE FLARED-V-GROOVE WELD SECTION - D1

C NOT TO SCALE — SCHEMATIC DIAGRAM SHOWING SPLICE

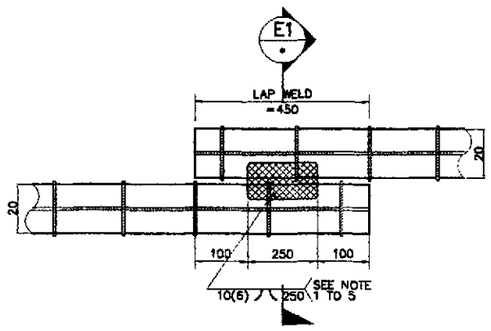

DIRECT LAP JOINT WITH BARS IN CONTACT

D NOT TO SCALE — DETAILS OF SPIRAL REINFORCEMENT LAP-WELD CONNECTION

NOTES ON LAP WELD CONNECTION

1. TIES REINFORCEMENT ARE LAP-WELD CONNECTED (FLARED-V-GROOVE TYPE).
2. WELDING SHOULD CONFORM TO ANSI/AWS D1.4-92 "STRUCTURAL WELDING CODE REINFORCEMENT STEEL".
3. USE ELECTRODE E90XX-X.
4. CARE SHOULD BE TAKEN NOT TO DAMAGE THE BORED PILE MAIN BARS DURING WELDING.
5. SPIRAL REINFORCEMENT SHOULD BE BUTT WELDED WHERE SPIRAL PITCH IS 75mm. OTHERWISE, USE LAP WELD SPLICE.

BAR BENDING DIAGRAM

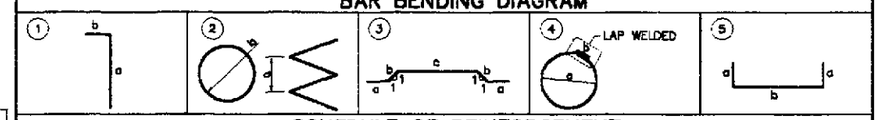

SCHEDULE OF REINFORCEMENT

LOCATION	BAR MARK	SIZE (mm)	BEND TYPE	DIMENSION(mm) OUT TO OUT a	b	c	d	e	f	LENGTH (mm)	NO. REQ'D.	UNIT WEIGHT (kg/m)	WEIGHT (Kg.) GRADE 60	WEIGHT (Kg.) GRADE 40
PIER 14	P1	36	1	11600	400					12,000	18	7.991	1,726.06	
	P2	36	1	11600	400					12,000	18	7.991	1,726.06	
	P2a	36	STR	10500						10,500	18	7.991	1,510.30	
	P3	20	2	90	1300					278,078	1	2.465	685.74	
	P3a	20	2	125	1300					235,730	1	2.465	581.31	
	P3b	16	2	225	1300					178,567	1	1.579		281.96
	P5	20	2	150	200	250				650	72	2.465	108.00	
	P6	25	4	1300	300					4,284	20	3.854	330.22	
	P4	16	5	200	1335					1,193	14	1.579		26.36
										WEIGHT FOR GRADE 40 =				308.32 Kgs.
										WEIGHT FOR GRADE 60 =			6,679.68 Kgs.	
										TOTAL WEIGHT FOR 1 PIER (6 PILES) :				
										WEIGHT FOR GRADE 40 =				1,849.92 Kgs.
										WEIGHT FOR GRADE 60 =			40,078.08 Kgs.	
PIER 21	P1	36	1	11600	400					12,000	18	7.991	1,726.06	
	P2	36	1	11600	400					12,000	18	7.991	1,726.06	
	P2a	36	STR	10500						10,500	18	7.991	1,510.30	
	P3	20	2	90	1300					278,078	1	2.465	685.74	
	P3a	20	2	125	1300					235,730	1	2.465	581.31	
	P3b	16	2	225	1300					178,567	1	1.579		281.96
	P5	20	2	150	200	250				650	72	2.465	108.00	
	P6	25	4	1300	300					4,284	20	3.854	330.22	
	P4	16	5	200	1335					1,193	14	1.579		26.36
										WEIGHT FOR GRADE 40 =				308.32 Kgs.
										WEIGHT FOR GRADE 60 =			6,679.68 Kgs.	
										TOTAL WEIGHT FOR 1 PIER (6 PILES) :				
										WEIGHT FOR GRADE 40 =				1,849.92 Kgs.
										WEIGHT FOR GRADE 60 =			40,078.08 Kgs.	

THE REINFORCEMENT SHOWN ON THIS TABLE IS FOR REFERENCE ONLY. THE CONTRACTOR SHOULD CHECK AND VERIFY ALL DIMENSIONS, SIZES AND QUANTITIES OF REINFORCEMENT.

JICA — JAPAN INTERNATIONAL COOPERATION AGENCY

KEI KATAHIRA & ENGINEERS INTERNATIONAL — YEC YACHIYO ENGINEERING CO., LTD.

	DATE	SIGNATURE
DESIGNED	9/21/02	M. S. ANGEL
CHECKED	9/23/02	J. C. SANTOS
SUBMITTED	10/15/02	TEAM LEADER

REPUBLIC OF THE PHILIPPINES
DEPARTMENT OF PUBLIC WORKS AND HIGHWAYS

PJHL – PMO	BUREAU OF DESIGN		OFFICE OF THE SECRETARY	
Submitted By:	Reviewed By:	Recommended By:	Recommended By: (See cover sheet for Signature)	Approved By: (See cover sheet for Signature/Approval)
DANILO C. TRAJANO, Project Director	ADRIANO M. DOROY, Chief, Bridges Division	GILBERTO S. REYES, Director IV (OIC)	MANUEL M. BONDAN, Undersecretary	SIMEON A. DATUMANONG, Secretary

PROJECT AND LOCATION :
THE DETAILED DESIGN STUDY ON UPGRADING INTER-URBAN HIGHWAY SYSTEM ALONG THE PAN-PHILIPPINE HIGHWAY (Plaridel, Cabanatuan and San Jose Bypasses)
PLARIDEL BYPASS - CONTRACT PACKAGE III

SCALE : AS SHOWN — FULL SIZE A1

SHEET CONTENTS :
BRIDGE NO. 8 ANGAT RIVER BRIDGE
BORED PILE REINFORCEMENT DETAILS (P14 & P21)
(INITIAL STAGE)

SHEET NO. : B8M-61

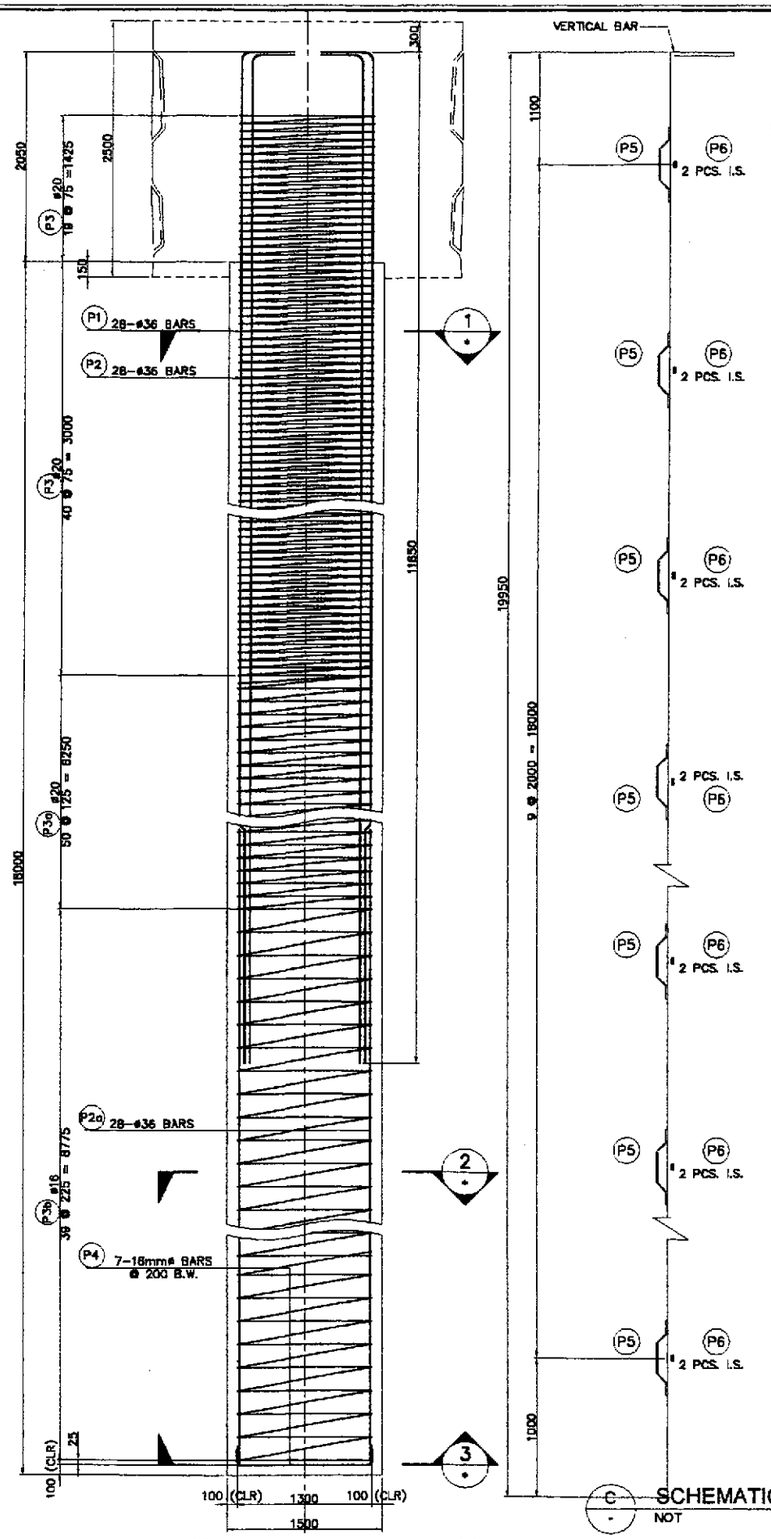

A SCALE 1:30 ELEVATION

B SCALE 1:30 LAYOUT OF STIFFENER

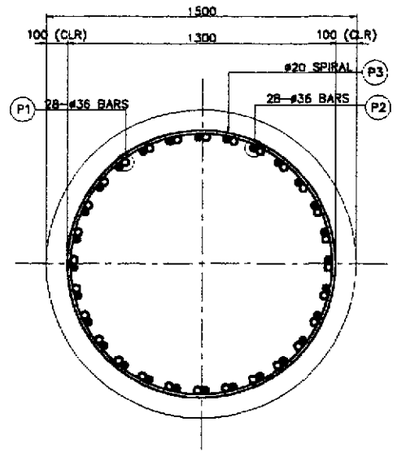

1 SCALE 1:15 SECTION

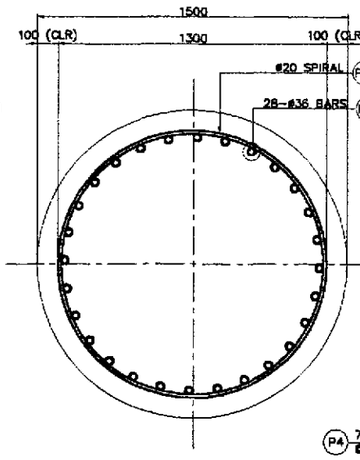

2 SCALE 1:15 SECTION

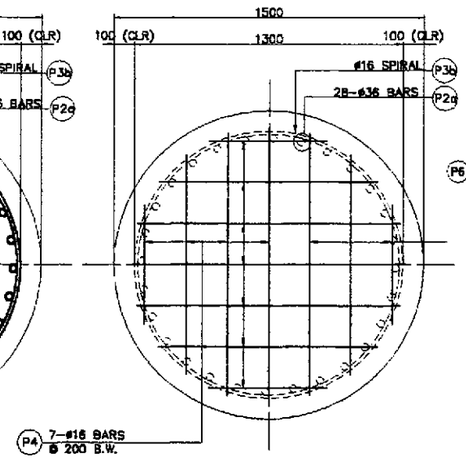

3 SCALE 1:15 SECTION

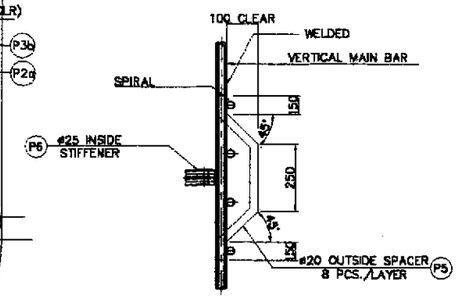

E NOT TO SCALE DETAIL OF STIFFENER/SPACER

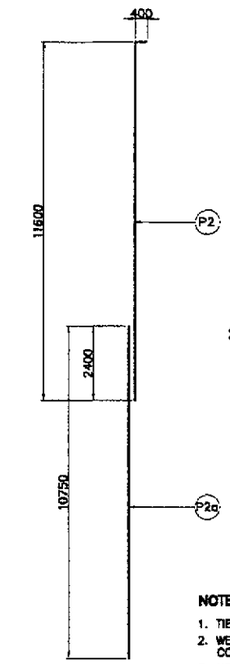

C NOT TO SCALE SCHEMATIC DIAGRAM SHOWING SPLICE

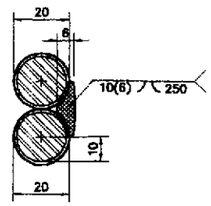

DOUBLE FLARED-V-GROOVE WELD
SECTION - D1

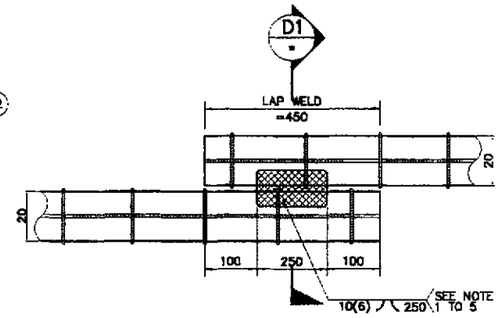

DIRECT LAP JOINT WITH BARS IN CONTACT

D NOT TO SCALE DETAILS OF TIES REINF. LAP-WELD CONNECTION

NOTES ON LAP WELD CONNECTION

1. TIES REINFORCEMENT ARE LAP-WELD CONNECTED (FLARED-V-GROOVE TYPE).
2. WELDING SHOULD CONFORM TO ANSI/AWS D1.4-92 "STRUCTURAL WELDING CODE REINFORCEMENT STEEL".
3. USE ELECTRODE E90XX-X.
4. CARE SHOULD BE TAKEN NOT TO DAMAGE THE BORED PILE MAIN BARS DURING WELDING.
5. SPIRAL REINFORCEMENT SHOULD BE BUTT WELDED WHERE SPIRAL PITCH IS 75mm. OTHERWISE, USE LAP WELD SPLICE.

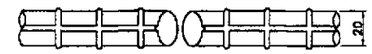

PLAN (BARS BEFORE WELDING)

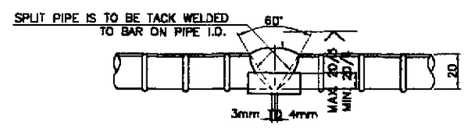

DETAILS OF SINGLE-V-GROOVE BUTT WELD

BAR BENDING DIAGRAM

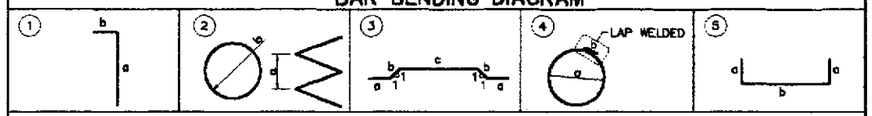

SCHEDULE OF REINFORCEMENT

LOCATION	BAR MARK	SIZE (mm)	BEND TYPE	DIMENSION(mm) OUT TO OUT a	b	c	d	e	f	LENGTH (mm)	NO. REQ'D.	UNIT WEIGHT (kg/m)	WEIGHT (Kg.) GRADE 60	WEIGHT (Kg.) GRADE 40
PIER 15 & PIER 20	P1	36	1	11600	400					12000	28	7.991	2,684.98	
	P2	36	1	11600	400					12000	28	7.991	2,684.98	
	P2a	36	STR	10750						10750	28	7.991	2,405.29	
	P3	20	2	75	1300					278078	1	2.466	685.55	
	P3a	20	2	125	1300					235730	1	2.466	581.31	
	P3b	16	2	225	1300					178567	1	1.579		281.95
	P5	20	3	150	200	250				950	72	2.466	168.67	
	P6	25	4	1300	300					4284	20	3.854	330.22	
	P4	16	5	200	1335					1193	14	1.579		26.36
										WEIGHT FOR GRADE 40 =				308.32 Kgs.
										WEIGHT FOR GRADE 60 =			9,541.00 Kgs.	
										TOTAL WEIGHT FOR 2 PIERS (18 PILES) :				
										WEIGHT FOR GRADE 40 =				8,549.76 Kgs.
										WEIGHT FOR GRADE 60 =			171,738.00 Kgs.	

THE REINFORCEMENT SHOWN ON THIS TABLE IS FOR REFERENCE ONLY. THE CONTRACTOR SHOULD CHECK AND VERIFY ALL DIMENSIONS, SIZES AND QUANTITIES OF REINFORCEMENT.

JICA
JAPAN INTERNATIONAL COOPERATION AGENCY
KEI KATAHIRA & ENGINEERS INTERNATIONAL
YEC YACHIYO ENGINEERING CO., LTD.

	DATE	SIGNATURE
DESIGNED	9/21/02	A. SUMAWANG
CHECKED	9/23/02	J. D. SANTOS
SUBMITTED	10/14/02	M. KURODA TEAM LEADER

REPUBLIC OF THE PHILIPPINES
DEPARTMENT OF PUBLIC WORKS AND HIGHWAYS

PUHL - PMO	BUREAU OF DESIGN		OFFICE OF THE SECRETARY	
Submitted By:	Reviewed By:	Recommended By:	Recommended By: (See cover sheet for Signature)	Approved By: (See cover sheet for Signature/Approval)
DANILO C. TRAJANO	ADRIANO M. DOROY	GILBERTO S. REYES	MANUEL M. BONDAN	SIMEON A. DATUMANONG
Project Director	Chief, Bridges Division	Director IV (OIC)	Undersecretary	Secretary

PROJECT AND LOCATION :
THE DETAILED DESIGN STUDY ON UPGRADING INTER-URBAN HIGHWAY SYSTEM ALONG THE PAN-PHILIPPINE HIGHWAY (Plaridel, Cabanatuan and San Jose Bypasses)
PLARIDEL BYPASS - CONTRACT PACKAGE III

SCALE : AS SHOWN FULL SIZE A1

SHEET CONTENTS :
BRIDGE NO. 8 ANGAT RIVER BRIDGE
BORED PILE REINFORCEMENT DETAILS (PIER 15 & PIER 20)
(INITIAL STAGE)

SHEET NO. : B8M-62

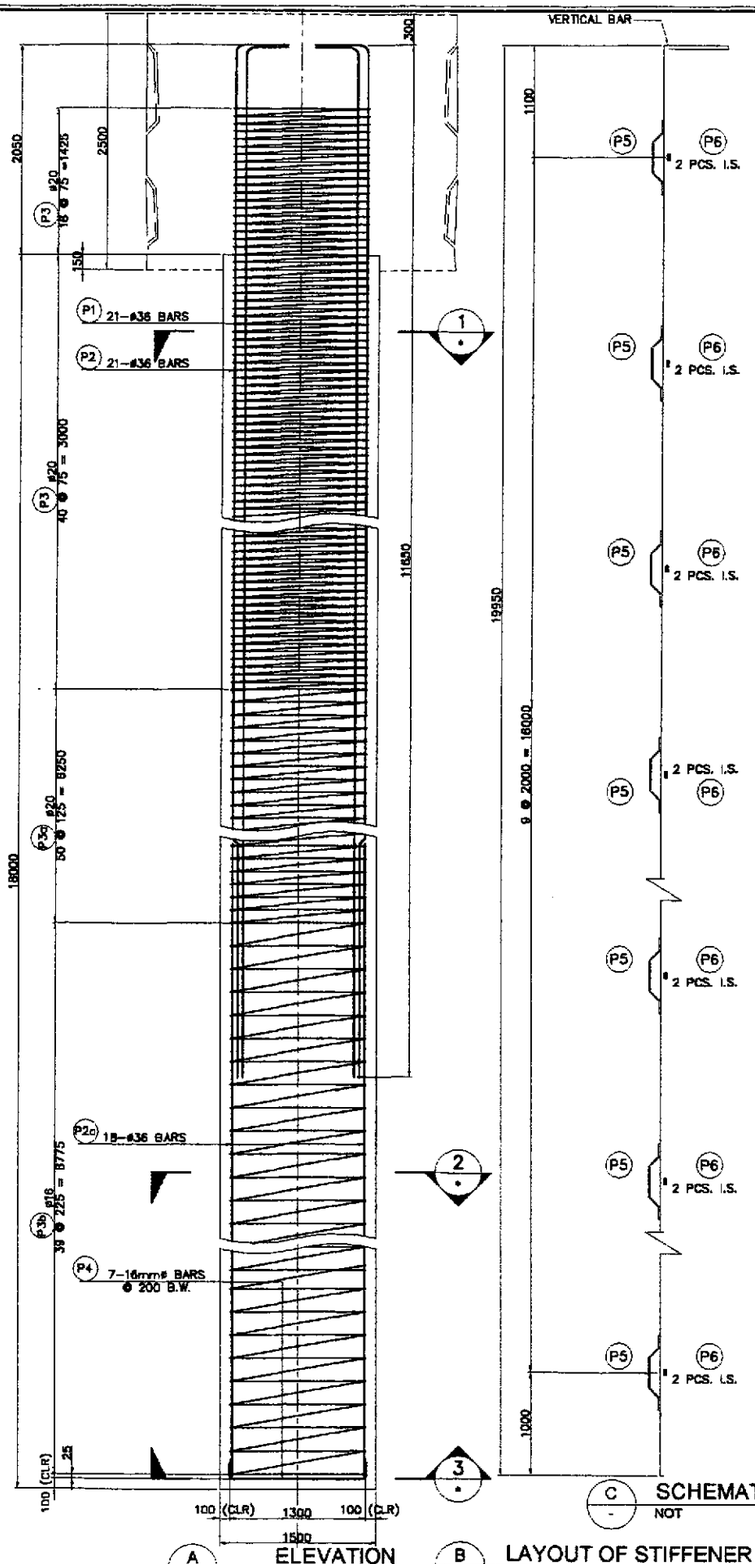

A ELEVATION
SCALE 1:30

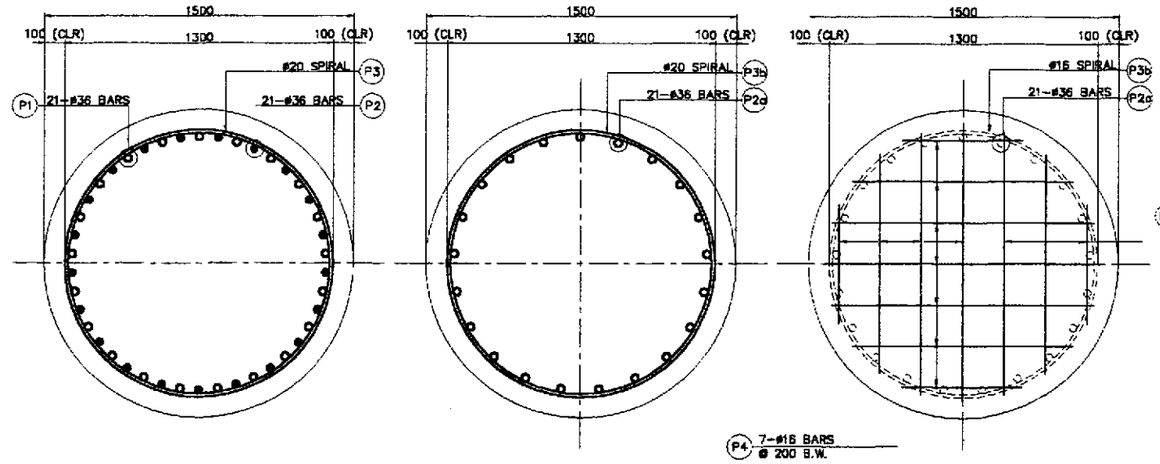

1 SECTION
SCALE 1:15

2 SECTION
SCALE 1:15

3 SECTION
SCALE 1:15

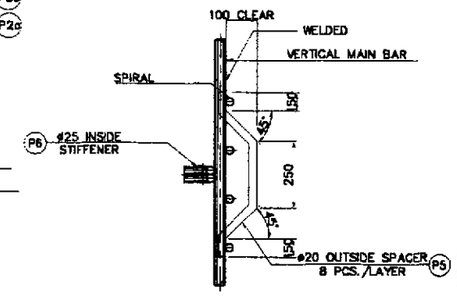

E DETAIL OF STIFFENER/SPACER
NOT TO SCALE

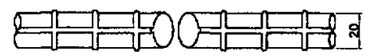

PLAN (BARS BEFORE WELDING)

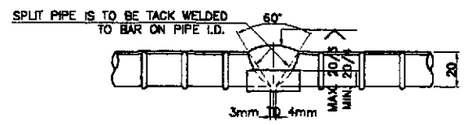

DETAILS OF SINGLE-V-GROOVE BUTT WELD

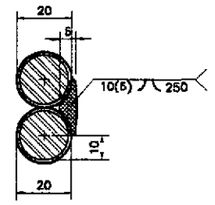

DOUBLE FLARED-V-GROOVE WELD
SECTION - D1

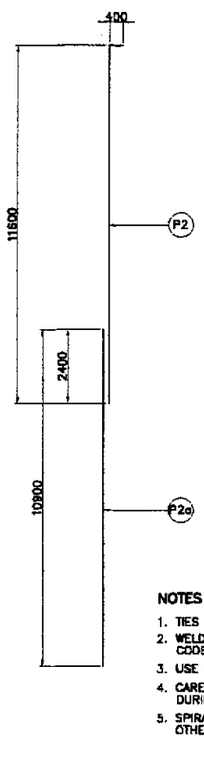

C SCHEMATIC DIAGRAM SHOWING SPLICE
NOT TO SCALE

B LAYOUT OF STIFFENER
SCALE 1:30

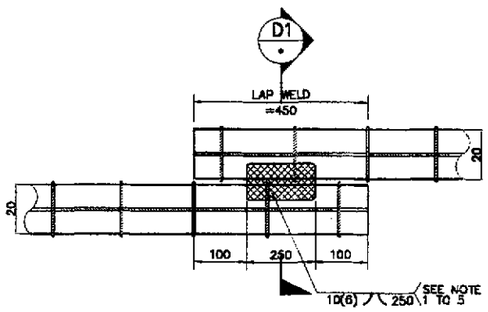

DIRECT LAP JOINT WITH BARS IN CONTACT

D DETAILS OF TIES REINF. LAP-WELD CONNECTION
NOT TO SCALE

NOTES ON LAP WELD CONNECTION

1. TIES REINFORCEMENT ARE LAP-WELD CONNECTED (FLARED-V-GROOVE TYPE).
2. WELDING SHOULD CONFORM TO ANSI/AWS D1.4-92 "STRUCTURAL WELDING CODE REINFORCEMENT STEEL".
3. USE ELECTRODE E60XX-X.
4. CARE SHOULD BE TAKEN NOT TO DAMAGE THE BORED PILE MAIN BARS DURING WELDING.
5. SPIRAL REINFORCEMENT SHOULD BE BUTT WELDED WHERE SPIRAL PITCH IS 75mm. OTHERWISE, USE LAP WELD SPLICE.

BAR BENDING DIAGRAM

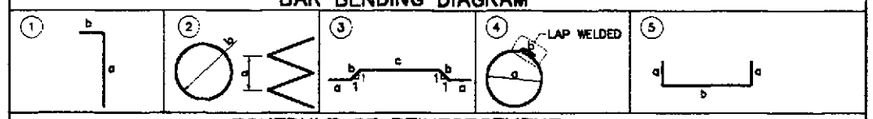

SCHEDULE OF REINFORCEMENT

LOCATION	BAR MARK	SIZE (mm)	BEND TYPE	DIMENSION(mm) OUT TO OUT a	b	c	d	e	f	LENGTH (mm)	NO. REQ'D.	UNIT WEIGHT (kg/m)	WEIGHT (Kg.) GRADE 60	WEIGHT (Kg.) GRADE 40
PIER 17 & PIER 18	P1	36	1	11600	400					12,000	21	7.991	2,013.73	
	P2	36	1	11600	400					12,000	21	7.991	2,013.73	
	P2a	36	STR	10750						10,750	21	7.991	1,803.97	
	P3	20	2	90	1300					278,078	1	2.466	685.74	
	P3a	20	2	125	1300					235,730	1	2.466	581.31	
	P3b	16	2	225	1300					178,557	1	1.579		281.98
	P5	20	3	150	200	250				950	72	2.466	168.67	
	P6	25	4	1300	300					4,284	20	3.854	330.22	
	P4	16	5	200	1335					1,193	14	1.579		26.36
								WEIGHT FOR GRADE 40			=			308.32 Kgs.
								WEIGHT FOR GRADE 60			=		7,597.37 Kgs.	
								TOTAL WEIGHT FOR 2 PIERS (18 PILES) :						
								WEIGHT FOR GRADE 40			=			5,549.76 Kgs.
								WEIGHT FOR GRADE 60			=		136,752.66 Kgs.	
PIER 16 & PIER 19	P1	36	1	11600	400					12,000	21	7.991	2,013.73	
	P2	36	1	11600	400					12,000	21	7.991	2,013.73	
	P2a	36	STR	10750						10,750	21	7.991	1,803.97	
	P3	20	2	90	1300					278,078	1	2.466	685.74	
	P3a	20	2	125	1300					235,730	1	2.466	581.31	
	P3b	16	2	225	1300					178,557	1	1.579		281.98
	P5	20	3	150	200	250				950	72	2.466	168.67	
	P6	25	4	1300	300					4,284	20	3.854	330.22	
	P4	16	5	200	1335					1,193	14	1.579		26.36
								WEIGHT FOR GRADE 40			=			308.32 Kgs.
								WEIGHT FOR GRADE 60			=		7,597.37 Kgs.	
								TOTAL WEIGHT FOR 2 PIERS (18 PILES) :						
								WEIGHT FOR GRADE 40			=			5,549.76 Kgs.
								WEIGHT FOR GRADE 60			=		136,752.66 Kgs.	

THE REINFORCEMENT SHOWN ON THIS TABLE IS FOR REFERENCE ONLY. THE CONTRACTOR SHOULD CHECK AND VERIFY ALL DIMENSIONS, SIZES AND QUANTITIES OF REINFORCEMENT.

JICA
JAPAN INTERNATIONAL COOPERATION AGENCY
KEI KATAHIRA & ENGINEERS INTERNATIONAL
YEO YACHIYO ENGINEERING CO., LTD.

	DATE	SIGNATURE
DESIGNED	9/21/02	J. SAMUEL
CHECKED	9/23/02	J. C. SANTOS
SUBMITTED	10/14/02	TEAM LEADER

REPUBLIC OF THE PHILIPPINES
DEPARTMENT OF PUBLIC WORKS AND HIGHWAYS

FUNC. - PMO	BUREAU OF DESIGN		OFFICE OF THE SECRETARY	
Submitted By:	Reviewed By:	Recommended By:	Recommended By: (See cover sheet for Signature)	Approved By: (See cover sheet for Signature/Approval)
DANILO C. TRAJANO, Project Director	ADRIANO M. DOROY, Chief, Bridges Division	GILBERTO S. REYES, Director IV (OIC)	MANUEL M. BONDAD, Undersecretary	SIMEON A. DATUMANONG, Secretary

PROJECT AND LOCATION :
THE DETAILED DESIGN STUDY ON UPGRADING INTER-URBAN HIGHWAY SYSTEM ALONG THE PAN-PHILIPPINE HIGHWAY (Plaridel, Cabanatuan and San Jose Bypasses)
PLARIDEL BYPASS - CONTRACT PACKAGE III

SCALE : AS SHOWN
FULL SIZE A1

SHEET CONTENTS :
BRIDGE NO. 6 ANGAT RIVER BRIDGE
BORED PILE REINFORCEMENT DETAILS (PIER 16 - PIER 19)
(INITIAL STAGE)

SHEET NO. : B8M-63

CONSTRUCTION WORKS

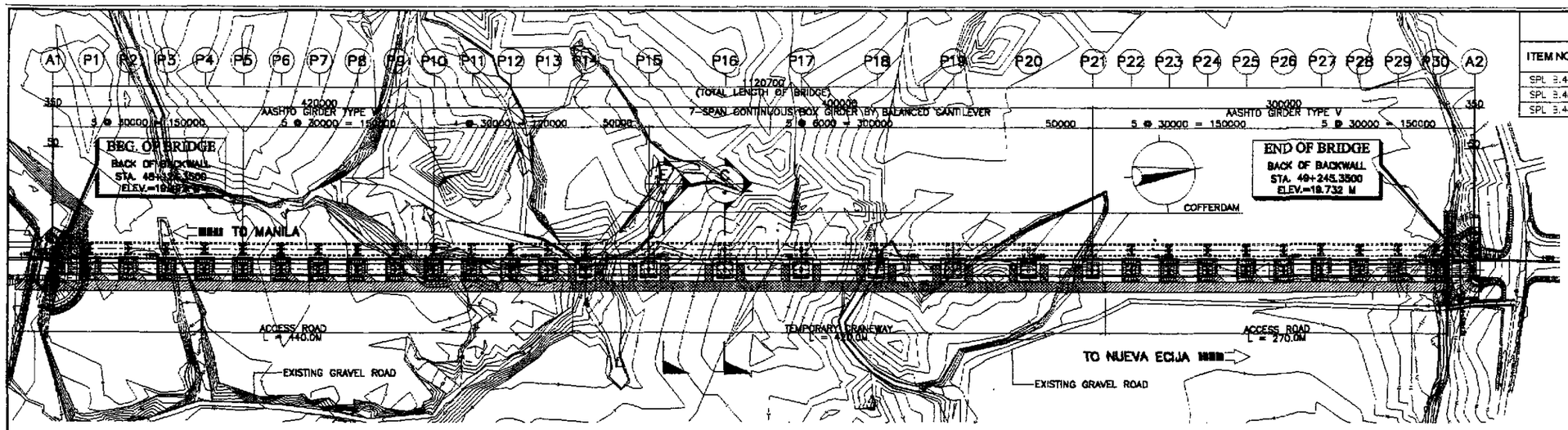

A PLAN
SCALE 1:2000

SUMMARY OF QUANTITIES FOR TEMPORARY WORKS					
ITEM NO.	DESCRIPTION	UNIT	INITIAL STAGE	ULTIMATE STAGE	TOTAL
SPL 3.4a	CRANEWAY/JETTY (8.0 m WIDTH)	m.	420	420	840
SPL 3.4b	CRANEWAY/JETTY (6.0 m WIDTH)	m.	195	208	416
SPL 3.4c	ACCESS ROAD (6.0 m WIDTH)	m.	710	710	1420

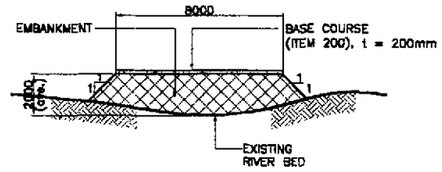

I SECTION (ACCESS ROAD)
SCALE 1:150

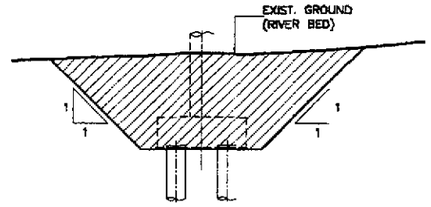

H FOUNDATION EXCAVATION DETAILS
SCALE 1:200

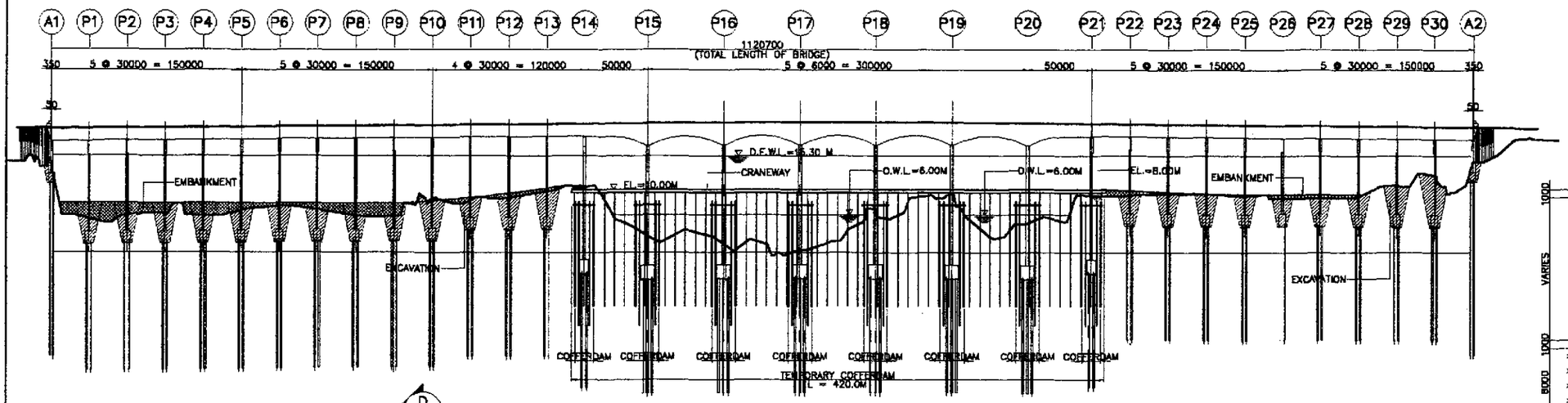

B ELEVATION
SCALE H=1:2000, V=1:400

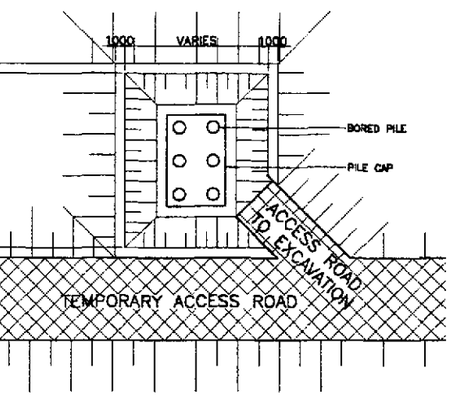

G ACCESS ROAD DETAIL (PLAN)
SCALE 1:300

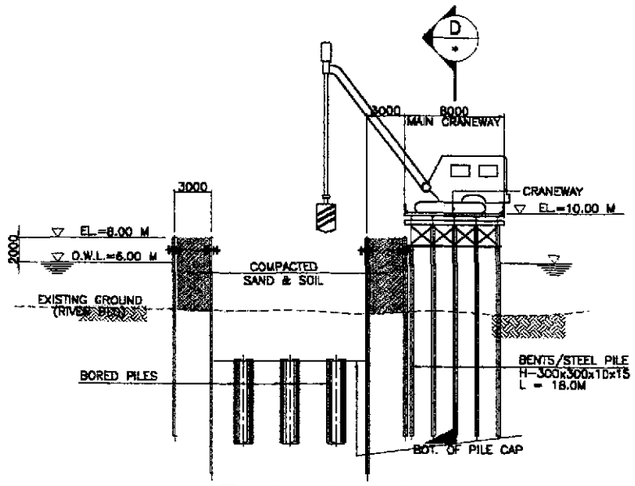

C SECTION
SCALE 1:250

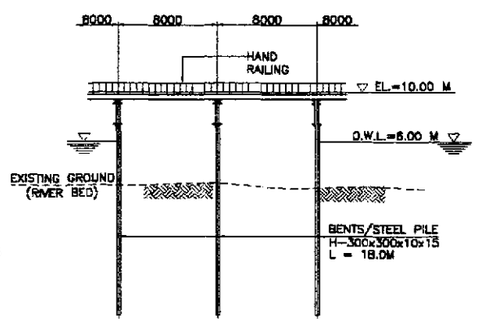

D SECTION
SCALE 1:250

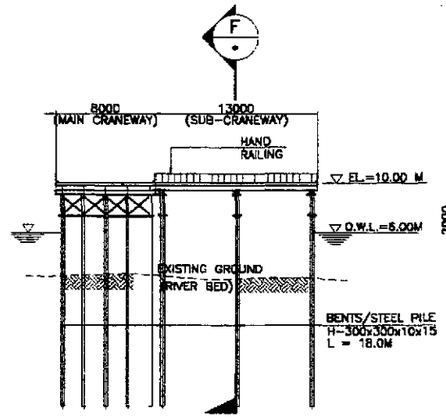

E SECTION
SCALE 1:250

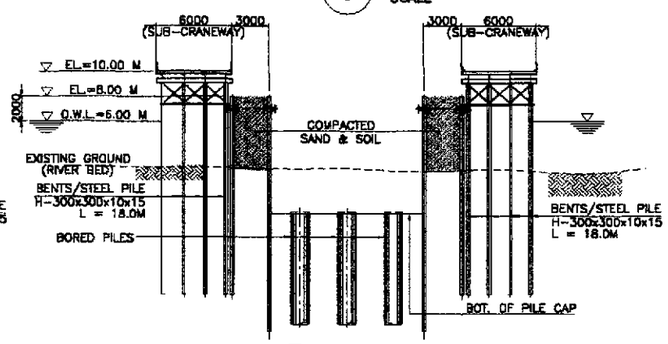

F SECTION
SCALE 1:250

JICA
JAPAN INTERNATIONAL COOPERATION AGENCY
KEI KATAHIRA & ENGINEERS INTERNATIONAL
YEO YACHIYO ENGINEERING CO., LTD.

	DATE	SIGNATURE
DESIGNED	9/21/02	W. S. [illegible]
CHECKED	9/23/02	J. C. SANTOS
SUBMITTED	10/9/02	M. [illegible] TEAM LEADER

REPUBLIC OF THE PHILIPPINES
DEPARTMENT OF PUBLIC WORKS AND HIGHWAYS

PUHL – PMO	BUREAU OF DESIGN		OFFICE OF THE SECRETARY	
Submitted By:	Reviewed By:	Recommended By:	Recommended By: (See cover sheet for Signature)	Approved By: (See cover sheet for Signature/Approval)
DANILO C. TRAJANO	ADRIANO M. DOROY	GILBERTO S. REYES	MANUEL M. BONGAN	SIMEON A. DATUMANONG
Project Director	Chief, Bridges Division	Director IV (OIC)	Undersecretary	Secretary

PROJECT AND LOCATION :
THE DETAILED DESIGN STUDY ON UPGRADING INTER-URBAN HIGHWAY SYSTEM ALONG THE PAN-PHILIPPINE HIGHWAY (Plaridel, Cabanatuan and San Jose Bypasses)
PLARIDEL BYPASS - CONTRACT PACKAGE III

SCALE :
AS SHOWN
FULL SIZE A1

SHEET CONTENTS :
BRIDGE NO. 8 ANGAT RIVER BRIDGE
DETAILS OF TEMPORARY CRANEWAY BRIDGE & COFFERDAM (1 OF 2)
(INITIAL STAGE)

SHEET NO. :
B8M-71

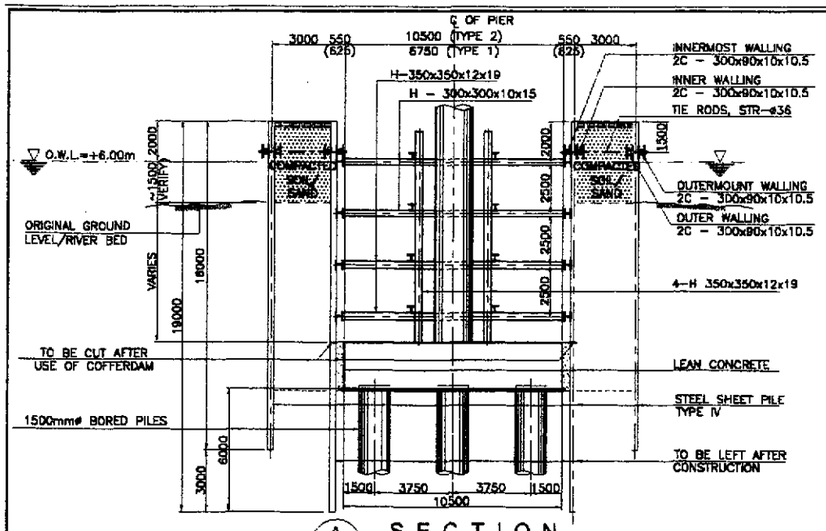

A SECTION
SCALE 1:300

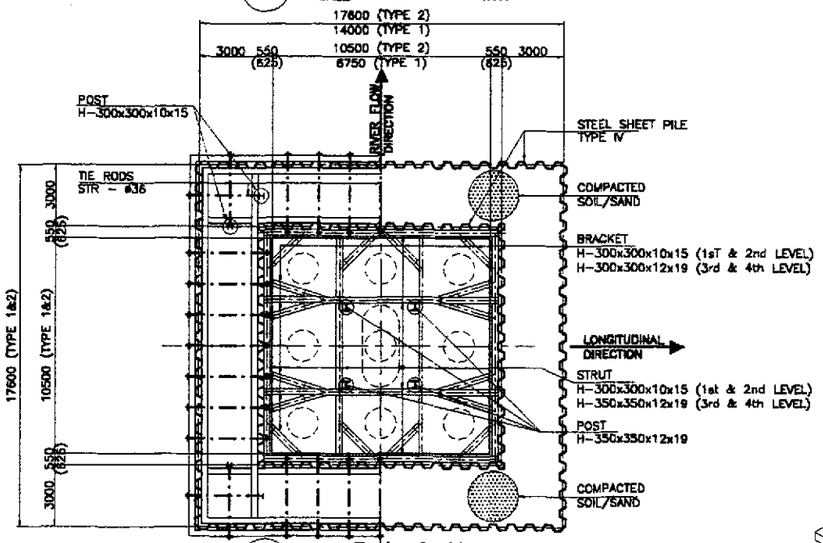

B PLAN
SCALE 1:300

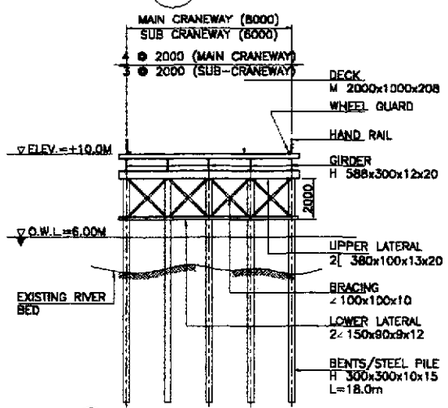

B CRANEWAY SECTION
SCALE 1:300

LEGEND :

1. OUTER SHEET PILE
2. INNER SHEET PILE
3. TIE RODS
4. WALLING
5. NUTS AND WASHER
6. HAND RAIL
7. DECK PLATE
8. MAIN GIRDER

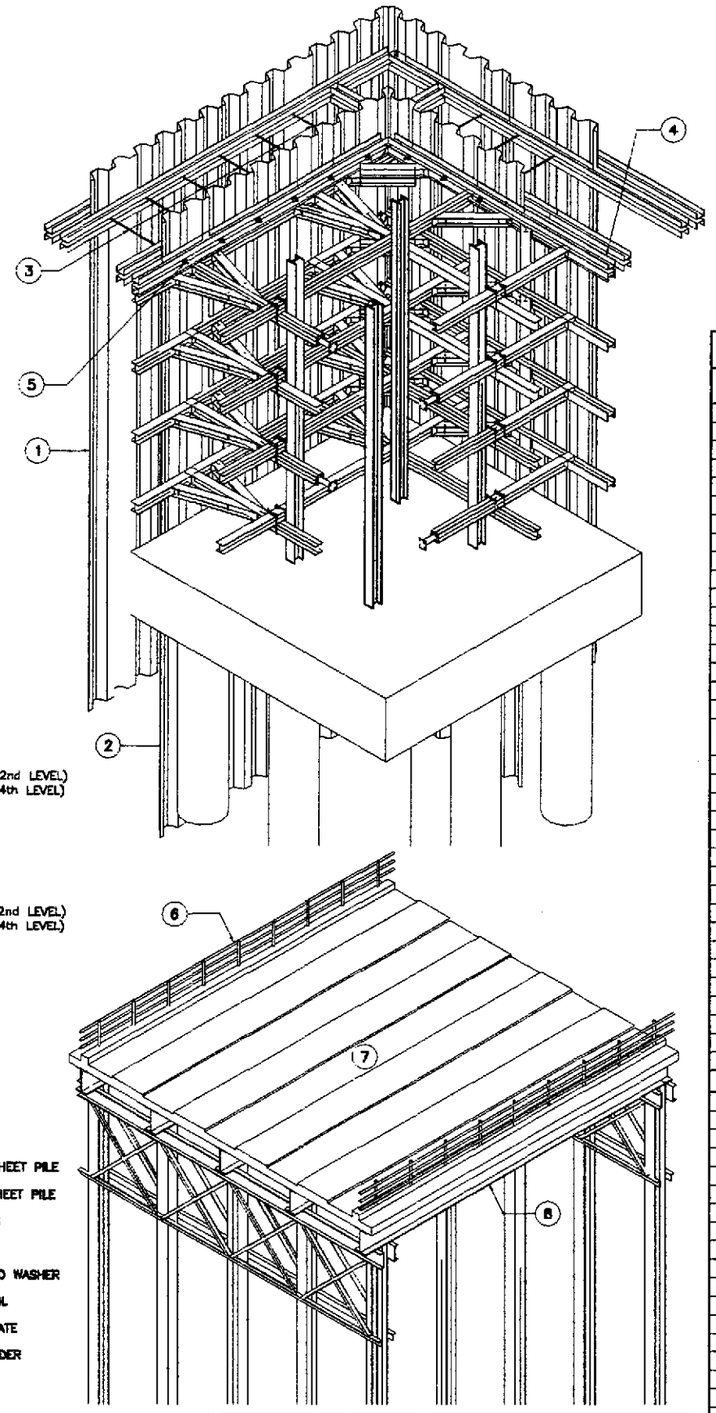

C ISOMETRIC VIEW
NOT TO SCALE

COFFERDAM SCHEDULE			
TYPE	PILE CAP SIZE	LOCATION	QUANTITY
1	6750 x 10500	PIER 14 & PIER 21	2
2	10500 x 10500	PIER 15 to PIER 20	6

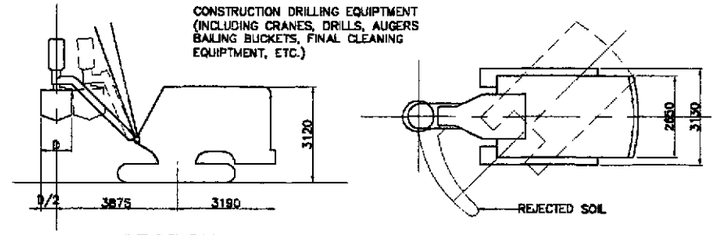

SECTION PLAN

D EARTH DRILL MACHINE
NOT TO SCALE

MATERIAL LIST OF TEMPORARY COFFERDAM (PER PIER)

MATERIAL NAME	SIZE	LENGTH (m)	NO. (pcs)	UNIT	UNIT WT. (kg/m)	WEIGHT (kg.)	REMARKS
TYPE 1 (6.75 x 10.5)							
Steel Sheet Pile (inner)	IV	19.00	98	kgs	76.10	141,699.00	
Steel Sheet Pile (outer)	IV	18.00	158	kgs	76.10	192,381.00	
Steel Strut, 1st& 2nd Level (Longitudinal)	H-300x300x10x15	5.85	4	kgs	94.00	2,576.00	
Steel Strut, 1st& 2nd Level (Transverse)	H-300x300x10x15	10.80	4	kgs	94.00	3,986.00	
Steel Strut, 3rd& 4th Level (Longitudinal)	H-350x350x12x19	5.85	4	kgs	137.00	3,754.00	
Steel Strut, 3rd& 4th Level (Transverse)	H-350x350x12x19	10.60	4	kgs	137.00	5,809.00	
Steel Waling (inner - longitudinal)	C-300x90x10x10.5	13.45	4	kgs	43.80	2,357.00	
Steel Waling (innermost - longitudinal)	C-300x90x10x10.5	7.45	4	kgs	43.80	1,306.00	
Steel Waling (inner - transverse)	C-300x90x10x10.5	17.20	4	kgs	43.80	3,014.00	
Steel Waling (innermost - transverse)	C-300x90x10x10.5	11.20	4	kgs	43.80	1,963.00	
Steel Waling (outer-longitudinal)	C-300x90x10x10.5	13.45	4	kgs	43.80	2,357.00	
Steel Waling (outer-longitudinal)	C-300x90x10x10.5	14.25	4	kgs	43.80	2,497.00	
Steel Waling (outer - transverse)	C-300x90x10x10.5	17.20	4	kgs	43.80	3,014.00	
Steel Waling (outer - transverse)	C-300x90x10x10.5	18.00	4	kgs	43.80	3,154.00	
Steel Post	H-300x300x10x15	18.00	8	kgs	94.00	12,032.00	
Steel Post	H-300x300x12x19	16.00	4	kgs	137.00	8,768.00	
Steel Bracket, 1st&2nd Level	H-300x300x10x15	2.00	24	kgs	94.00	4,512.00	
Steel Bracket, 3rd&4thLevel	H-350x350x12x19	2.00	24	kgs	137.00	8,576.00	
Tie Rods	STR - Ø36	3.50	32	kgs	7.99	895.00	
Sand/Soil	Borrow Materials			m^3		610.80	Selected Materials
TYPE 2 (10.5 x 10.5)							
Steel Sheet Pile (inner)	IV	18.00	116	kgs	76.10	167,725.00	
Steel Sheet Pile (outer)	IV	18.00	176	kgs	76.10	214,298.00	
Steel Strut, 1st& 2nd Level	H-300x300x10x15	10.60	16	kgs	94.00	15,943.00	
Steel Strut, 3rd & 4th Level	H-350x350x12x19	10.60	16	kgs	137.00	23,236.00	
Steel Waling (inner)	C-300x90x10x10.5	17.20	8	kgs	43.80	6,027.00	
Steel Waling (innermost)	C-300x90x10x10.5	11.20	8	kgs	43.80	3,925.00	
Steel Waling (outer)	C-300x90x10x10.5	17.20	8	kgs	43.80	6,027.00	
Steel Waling (outermost)	C-300x90x10x10.5	18.00	8	kgs	43.80	6,308.00	
Steel Post	H-350x350x12x19	16.00	4	kgs	137.00	8,768.00	
Steel Post	H-300x300x10x15	16.00	8	kgs	94.00	12,032.00	
Steel Bracket, 1st&2nd Level	H-300x300x10x15	2.00	32	kgs	94.00	6,016.00	
Steel Bracket, 3rd&4th Level	H-350x350x12x19	2.00	32	kgs	137.00	8,768.00	
Tie Rods	STR - Ø36	3.50	36	kgs	7.99	1,007.00	
Sand/Soil	Borrow Materials			m^3		700.80	Selected Materials
MATERIAL LIST OF TEMPORARY CRANEWAY							
A) MAIN CRANEWAY, L = 416 000 mm							
Steel Pile (Bents)	H-300 x 300 x 10 x 15	18.00	265	kgs	94.00	448,380.00	
Lower Lateral	L-150 x 90 x 9 x 12	9.30	106	kgs	16.40	16,168.00	
Upper Lateral	C-380 x 100 x 13 x 20	9.30	106	kgs	67.30	66,345.00	
Bracing	L-100 x 100 x 10	2.90	424	kgs	14.90	18,322.00	
Girder	H-588 x 300 x 12 x 20	8.00	260	kgs	147.00	305,760.00	
Deck Plate	2000 x 1000 x 208			m^2		3,380.00	
Hand Railing				m		840.00	
Wheel Guard				m		840.00	
B) SUB CRANEWAY							
Steel Pile (Bents)	H-300 x 300 x 10 x 15	18.00	168	kgs	94.00	284,256.00	
Lower Lateral	L-150 x 90 x 9 x 12	7.30	84	kgs	16.40	10,057.00	
Upper Lateral	C-380 x 100 x 13 x 20	7.30	84	kgs	67.30	41,269.00	
Bracing	L-100 x 100 x 10	2.90	84	kgs	14.90	3,630.00	
Girder	H-588 x 300 x 12 x 20	13.00	58	kgs	147.00	107,016.00	
Deck Plate	2000 x 1000 x 208			m^2		1,092.00	
Hand Railing				m		364.00	
Wheel Guard				m		364.00	
MATERIAL LIST OF ACCESS ROAD							
Base Course, t = 200 mm		710.00		m3		1165.00	
Embankment		710.00		m3		12330.00	

JICA
JAPAN INTERNATIONAL COOPERATION AGENCY
KEI KATAHIRA & ENGINEERS INTERNATIONAL
YEC YACHIYO ENGINEERING CO., LTD.

DESIGNED	9/21/02	M. SUGIYAMA
CHECKED	9/25/02	J. SIMOS
SUBMITTED	10/4/02	TEAM LEADER

REPUBLIC OF THE PHILIPPINES
DEPARTMENT OF PUBLIC WORKS AND HIGHWAYS

PUHL - PMO	BUREAU OF DESIGN		OFFICE OF THE SECRETARY	
Submitted By:	Reviewed By:	Recommended By:	Recommended By: (See cover sheet for Signature)	Approved By: (See cover sheet for Signature/Approval)
DANILO C. TRAJANO	ADRIANO M. DOROY	GILBERTO S. REYES	MANUEL M. BONOAN	SIMEON A. DATUMANONG
Project Director	Chief, Bridges Division	Director IV (OIC)	Undersecretary	Secretary

PROJECT AND LOCATION :
THE DETAILED DESIGN STUDY ON UPGRADING INTER-URBAN HIGHWAY SYSTEM ALONG THE PAN-PHILIPPINE HIGHWAY (Plaridel, Cabanatuan and San Jose Bypasses)
PLARIDEL BYPASS - CONTRACT PACKAGE III

SCALE :
AS SHOWN
FULL SIZE A1

SHEET CONTENTS :
BRIDGE NO. 8 ANGAT RIVER BRIDGE
DETAILS OF TEMPORARY CRANEWAY BRIDGE & COFFERDAM (2 OF 2)
(INITIAL STAGE)

SHEET NO. :
B8M-72

A — CAPITAL PIER STAGING BY STEEL BRACKET (TYPE-A)

SCALE 1 : 50

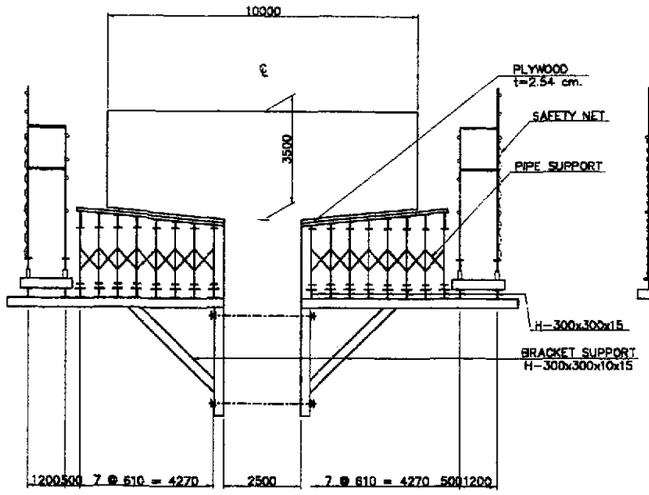

A1 — SECTION
SCALE 1 : 100

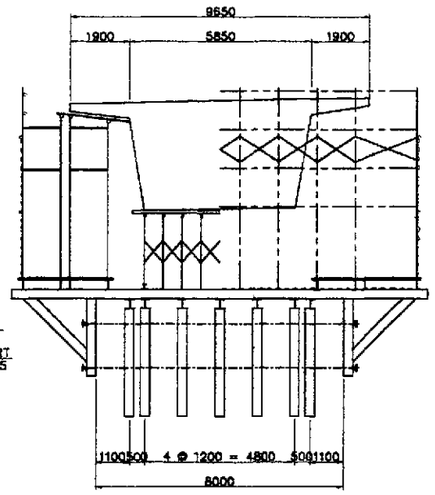

A2 — CROSS SECTION
SCALE 1 : 100

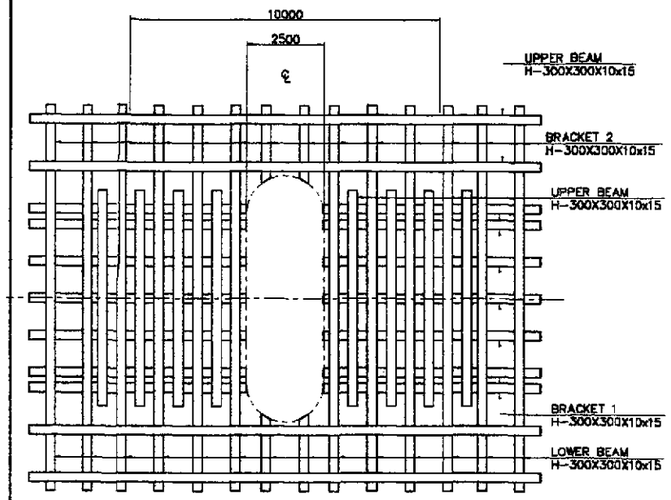

A3 — PLAN
SCALE 1 : 100

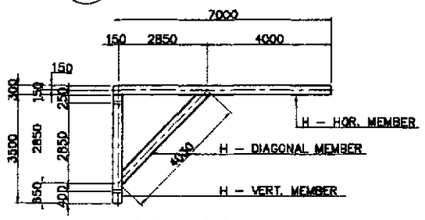

BRACKET - 1

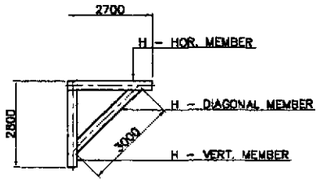

BRACKET - 2

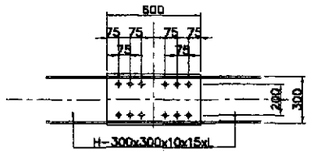

C4 — JOINT DETAIL
SCALE 1 : 20

B — SUSPENDED SUPPORT AT CENTRAL CLOSING PORTION (TYPE-B)

SCALE 1 : 50

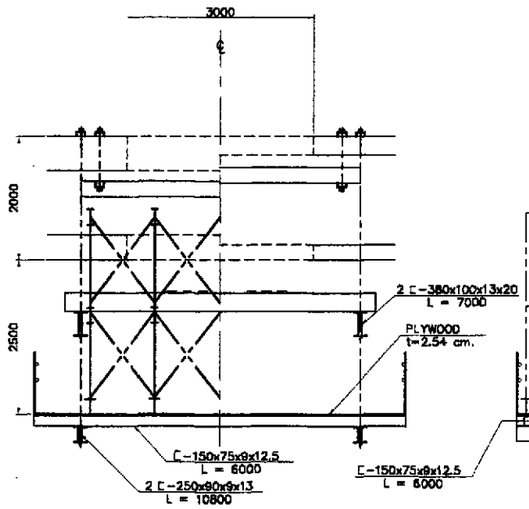

B1 — SECTION
SCALE 1 : 50

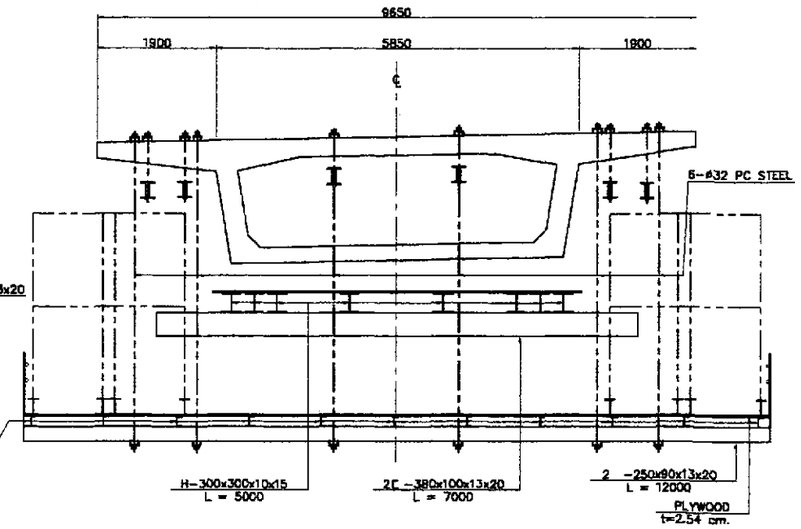

B2 — CROSS SECTION
SCALE 1 : 50

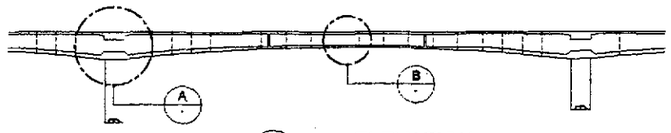

D — ELEVATION
SCALE 1 : 400

MATERIAL LIST

MATERIAL NAME	SIZE	LENGTH (m)	PCS.	UNIT WT. (Kg/m)	WEIGHT (Kg)	REMARKS
H-BEAM	H-300x300x10x15	5.00	8	94.00	3760.00	
C-BEAM	2C -250x90x9x13	12.00	2	34.60	747.40	
C-BEAM	2C -250x90x9x13	4.50	6	34.60	934.20	
C-BEAM	2C -380x100x13x20	7.00	2	67.30	942.20	
C-BEAM	C-150x75x9x12.5	6.00	12	24.00	1728.00	
				TOTAL WEIGHT =	8112.80 Kgs.	

NOTE :

THE CONTRACTOR SHALL SUBMIT FOR THE APPROVAL OF THE ENGINEER A MORE DETAILED DRAWINGS AND CALCULATIONS OF FORMWORKS, SHORIGS AND SUPPORTS BEFORE ANY WORK COMMENCE. THIS DRAWING SHALL BE USED ONLY AS REFERENCE.

C — SUPPORTED STAGING AT SIDE SPAN (TYPE-C)

SCALE 1 : 400

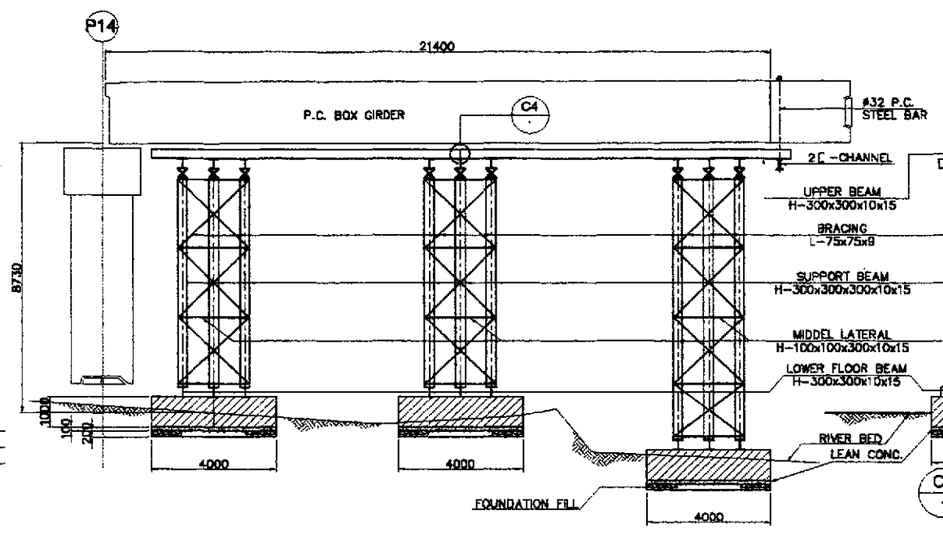

C1 — ELEVATION AT SIDE SPAN
SCALE 1 : 100

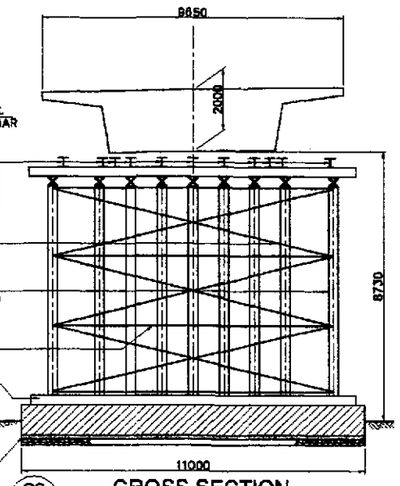

C2 — CROSS SECTION
SCALE 1 : 100

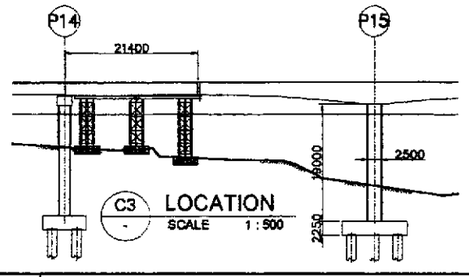

C3 — LOCATION
SCALE 1 : 500

MATERIAL LIST

	MATERIAL NAME	SIZE	LENGTH (m)	PCS.	UNIT WT. (Kg/m)	WEIGHT (Kg)	REMARKS
BEAM	H-BEAM	H-300x300x10x15	13.00	12	94.00	14664	
	H-BEAM	H-300x300x10x15	6.50	8	94.00	4888	
	H-BEAM	H-300x300x10x15	8.50	4	94.00	3196	
	H-BEAM	H-300x300x10x15	9.00	4	94.00	3384	
					SUB-TOTAL =	26132	
BRACKET	H-BEAM	H-300x300x10x15	7.00	14	94.00	9212	TYPE 1
	H-BEAM	H-300x300x10x15	4.00	14	94.00	5264	
	H-BEAM	H-300x300x10x15	3.50	14	94.00	4606	
	H-BEAM	H-300x300x10x15	2.70	4	94.00	1015	TYPE 2
	H-BEAM	H-300x300x10x15	3.00	4	94.00	1128	
	H-BEAM	H-300x300x10x15	2.80	4	94.00	1053	
					SUB-TOTAL =	22278	
					TOTAL WEIGHT =	48410 Kgs.	

JICA — JAPAN INTERNATIONAL COOPERATION AGENCY

KATAHIRA & ENGINEERS INTERNATIONAL — YACHIYO ENGINEERING CO., LTD.

	DATE	SIGNATURE
DESIGNED	9/21/02	M. S. [illegible]
CHECKED	9/23/02	J. C. SANTOS
SUBMITTED	10/14/02	[illegible] TEAM LEADER

REPUBLIC OF THE PHILIPPINES
DEPARTMENT OF PUBLIC WORKS AND HIGHWAYS

PUHL – PMO	BUREAU OF DESIGN		OFFICE OF THE SECRETARY	
Submitted By:	Reviewed By:	Recommended By:	Recommended By: (See cover sheet for Signature)	Approved By: (See cover sheet for Signature/Approval)
DANILO C. TRAJANO, Project Director	ADRIANO M. DOROY, Chief, Bridges Division	GILBERTO S. REYES, Director IV (OIC)	MANUEL M. BONDAN, Undersecretary	SIMEON A. DATUMANONG, Secretary

PROJECT AND LOCATION :
THE DETAILED DESIGN STUDY ON UPGRADING INTER-URBAN HIGHWAY SYSTEM ALONG THE PAN-PHILIPPINE HIGHWAY (Plaridel, Cabanatuan and San Jose Bypasses)
PLARIDEL BYPASS - CONTRACT PACKAGE III

SCALE : AS SHOWN — FULL SIZE A1

SHEET CONTENTS :
BRIDGE NO. 8 ANGAT RIVER BRIDGE
DETAIL OF TEMPORARY SUPPORT (SIDE SPAN & CENTER CLOSURE)
(INITIAL STAGE)

SHEET NO. : B8M-73

A CONSTRUCTION STAGES BY CANTILEVER ERECTION METHOD

SCALE 1 : 1000

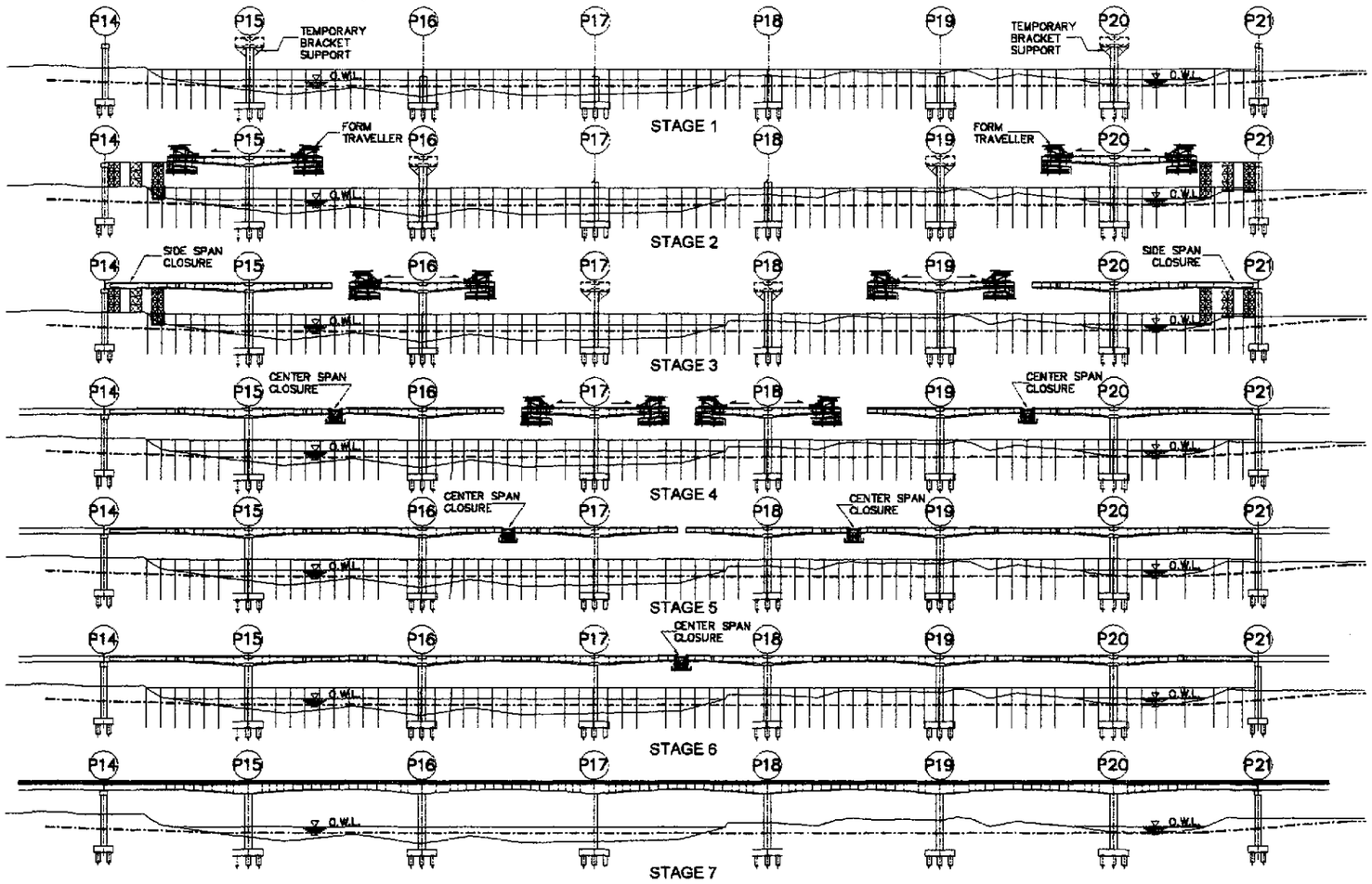

B TRAVELLER EQUIPMENT (WAGON)

SCALE 1 : 100

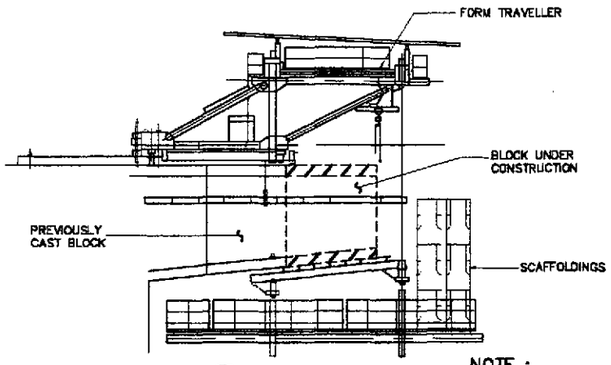

B1 SIDE ELEVATION

SCALE 1 : 100

NOTE :

THE FORM TRAVELLER WEIGHT ASSUMED IN THE DESIGN IS 600 KN. IF THE ACTUAL WEIGHT OF THE FORM TRAVELLER VARIES FROM THE ASSUMED, THE CONTRACTOR SHOULD PREPARE AND SUBMIT A CHECK OF STRESSES AND CAMBER CALCULATION FOR THE APPROVAL OF THE ENGINEER.

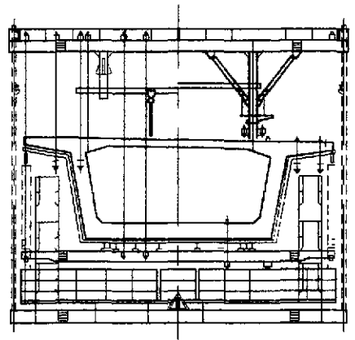

B2 CROSS SECTION

SCALE 1 : 100

CONSTRUCTION SCHEDULE (SUPERSTRUCTURE)

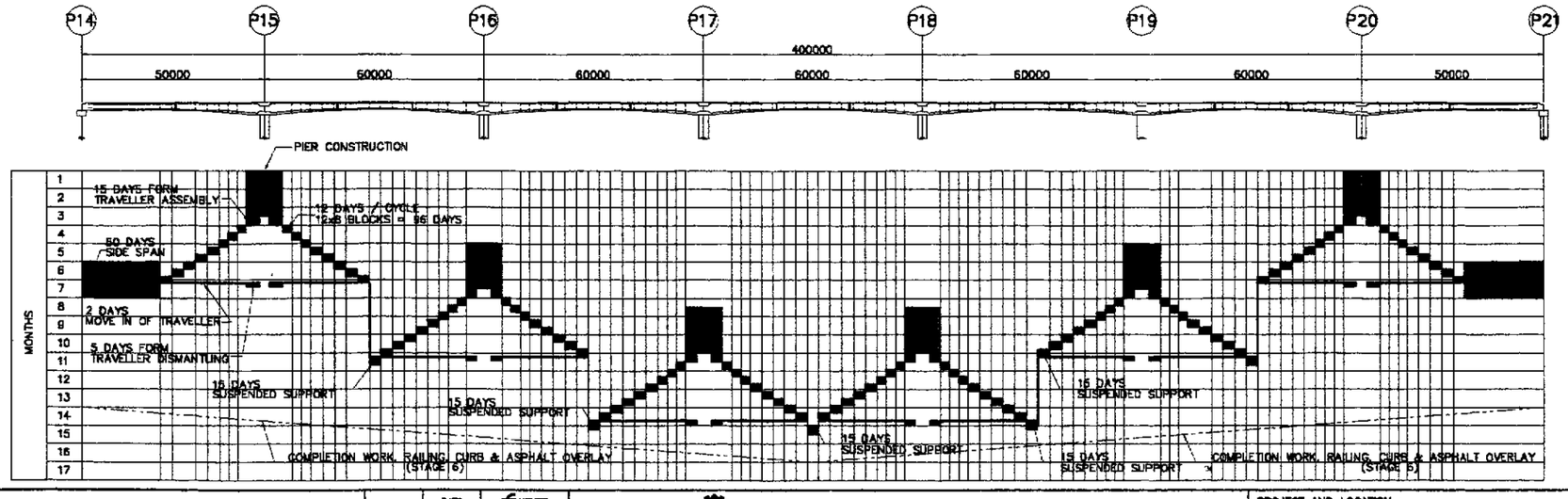

CONSTRUCTION SEQUENCE:

STAGE 1 PIER HEAD & INITIAL BLOCKS

INITIAL BLOCKS ON PIERS P15 & P20 SHALL BE CONSTRUCTED ON TEMPORARY BRACKET SUPPORT INSTALLED AT THE HEAD OF PIERS.

STAGE 2 P15 & P19 BALANCED CANTILEVER CONSTRUCTION

AFTER THE COMPLETION OF INITIAL BLOCKS , TRAVELLER EQUIPMENT (WAGON) SHALL BE ASSEMBLED ON THE ESTABLISHED BLOCKS. THEN THE CONSTRUCTION OF EACH BLOCK SHALL COMMENCE FROM THE EXISTING BLOCK TO BOTH SIDES BY CANTILEVER METHOD USING "WAGON" SIMULTANEOUSLY. PREPARATION FOR SIDE SPAN CONSTRUCTION WORKS STARTS. INITIAL BLOCKS FOR P15 & P19 IS CARRIED-OUT.

STAGE 3 P14 & P21 SIDE SPAN CONSTRUCTION + P16 & P18 BALANCED CANTILEVER CONSTRUCTION

SIDE SPAN CONSTRUCTION BY STAGING (SUPPORTS/SHORING). P16 & P19 BALANCE CANTILEVERING IS DONE SIMULTANEOUSLY WITH SIDE SPAN CONSTRUCTION. INITIAL BLOCKS FOR P17 & P18 IS ALSO CARRIED-OUT.

STAGE 4 CENTER SPAN CLOSURE + P17 & P18 BALANCED CANTILEVERING

ON COMPLETION OF BLOCKS ON PIERS P16 & P19 BY CANTILEVERING FINAL BLOCK LOCATED AT THE CENTER OF THE SPAN P15 & P16 & P19 & P20 SHALL BE CONSTRUCTED BY SUSPENDED FORMWORKS. P17 & P18 BALANCED CANTILEVERING IS DONE SIMULTANEOUSLY.

STAGE 5 CENTER CLOSURES

ON COMPLETION OF BLOCKS ON PIERS P17 & P18 THE FINAL BLOCK AT THE CENTERS OF PIER P16 & P17 AND P18 & P19 SHALL BE CONSTRUCTED BY SUSPENDED FORMWORKS AND STRESSED TO COMPLETE THE MAIN BRIDGE.

STAGE 6 CENTER CLOSURE

FINAL BLOCK AT CENTER OF P17 & P18 SHALL CONSTRUCTED.

STAGE 7 FINISHING WORKS

ALL MISCELLANEOUS WORKS INCLUDING SURFACING IS CARRIED-OUT.

JICA
JAPAN INTERNATIONAL COOPERATION AGENCY

KATAHIRA & ENGINEERS INTERNATIONAL
YACHIYO ENGINEERING CO., LTD.

	DATE	SIGNATURE
DESIGNED	9/21/02	M. S. [illegible]
CHECKED	9/23/02	J. C. SANTOS
SUBMITTED	10/14/02	[illegible] TEAM LEADER

REPUBLIC OF THE PHILIPPINES
DEPARTMENT OF PUBLIC WORKS AND HIGHWAYS

PJHL - PMO	BUREAU OF DESIGN		OFFICE OF THE SECRETARY	
Submitted By:	Reviewed By:	Recommended By:	Recommended By: (See cover sheet for Signature)	Approved By: (See cover sheet for Signature/Approval)
DAMILO C. TRAJANO	ADRIANO M. DOROY	GILBERTO S. REYES	MANUEL M. BONDAN	SIMEON A. DATUMANONG
Project Director	Chief, Bridges Division	Director IV (OIC)	Undersecretary	Secretary

PROJECT AND LOCATION :

THE DETAILED DESIGN STUDY ON UPGRADING INTER-URBAN HIGHWAY SYSTEM ALONG THE PAN-PHILIPPINE HIGHWAY (Plaridel, Cabanatuan and San Jose Bypasses)

PLARIDEL BYPASS - CONTRACT PACKAGE III

SCALE : AS SHOWN

FULL SIZE A1

SHEET CONTENTS :

BRIDGE NO. 8 ANGAT RIVER BRIDGE
MAIN BRIDGE
CONSTRUCTION SEQUENCE
(INITIAL STAGE)

SHEET NO. : B8M-74

SPECIAL NOTES FOR CONSTRUCTION OF MAIN BRIDGE AND RELATED TEMPORARY WORKS

1. AT LEAST ONE (1) MONTH BEFORE COMMENCEMENT OF ANY STRUCTURE WORKS, THE CONTRACTOR SHALL SUBMIT TO THE ENGINEER FOR APPROVAL COMPLETE DETAILS OF THE CONSTRUCTION METHOD AND SCHEDULE WHICH SHOULD INCLUDE, BUT NOT LIMITED TO THE FOLLOWING :
   - DETAILED CONSTRUCTION SEQUENCE AND SCHEDULE BASED ON EQUIPMENT CAPACITY MOBILIZED, CONCRETE TRIAL MIX RESULTS (DEVELOPMENT OF CONCRETE STRENGTH), TYPE OF CRANE AND ALL OTHER RELEVANT INFORMATION. THE CONSTRUCTION SEQUENCE AND CONSTRUCTION SCHEDULE OF SUPERSTRUCTURE SHOWN ABOVE SHALL BE CONSIDERED AS REFERENCE ONLY TO GUIDE THE CONTRACTOR.
   - PRESTRESSING METHOD, COMPLETE DETAILS OF THE PROPOSED METHOD, MATERIALS, AND EQUIPMENT TO BE USED IN THE PRESTRESSING OPERATIONS. SUCH DETAILS SHALL INCLUDE THE COMPLETE SPECIFICATIONS AND DETAILS OF THE PRESTRESSING STEEL AND ANCHORING DEVICES, TYPE OF ENCLOSURES AND ALL OTHER DATA RELATED TO PRESTRESSING OPERATION. THE CONTRACTOR SHALL ALSO SUBMIT TO THE CONSULTANT FOR APPROVAL THE PROPOSED PRESTRESSING CONTROL AND ASSURANCE METHOD.
   - CAMBER CALCULATION DURING CONSTRUCTION AND AFTER COMPLETION OF THE MAIN BRIDGE BASED ON ACTUAL WEIGHT MOBILIZED, ANTICIPATED SURCHARGE AND RESPECTIVE PHYSICAL CONCRETE PROPERTIES UNDER THE DIFFERENT AGE TO BE CONSIDERED AND OTHER LOADS AFFECTING CAMBER. THE CAMBER SHALL BE CALCULATED AT LEAST BASED ON THE EFFECT OF THE FOLLOWING :
   - DEFLECTION DUE TO CONSTRUCTION LIVE LOAD.
   - DEFLECTION DUE TO WEIGHT OF FRESH CONCRETE.
   - DEFLECTION DUE TO PRESTRESSING FORCE.
   - DEFLECTION DUE TO CREEP AND SHRINKAGE OF CONCRETE. AND
   - PRESTRESSING CALCULATION SHOWING THE ESTIMATED PRESTRESSING FORCE AND THE DETAILED ARRANGEMENT OF INDIVIDUAL P.C. CABLES AND PRESTRESSING SEQUENCE OF EACH CABLE, ETC. TO BE PREPARED AND SUBMITTED BY THE CONTRACTOR BASED ON THE CALCULATIONS MADE IN THE DETAILED DESIGN (WHICH WILL BE PROVIDED TO THE CONTRACTOR). ANTICIPATED ELASTICITY MODULUS OF CONCRETE RESULTING FROM THE CONCRETE TRIAL MIX AND OTHER RELATED DATA NECESSARY IN THE PRESTRESSING CALCULATION.
   - STRESSES OF MEMBERS AT DIFFERENT STAGES OF CONSTRUCTION SHOULD BE CHECKED AND VERIFIED BY THE CONTRACTOR ESPECIALLY DURING STRESSING OPERATIONS.

2. CRANEWAY CONSISTING OF TEMPORARY BRIDGE AND APPROACH ROAD SHOWN IN DWG. NO. BM-71
   - PRIOR TO COMMENCEMENT OF CRANEWAY CONSTRUCTION, THE CONTRACTOR SHALL SUBMIT A DETAILED CONSTRUCTION DRAWING OF THE CRANEWAY WITH STRUCTURAL ANALYSIS BASED ON THE LATEST TOPOGRAPHIC SURVEY (S=1/500) TAKEN IN PRE-CONSTRUCTION SURVEY STAGE AND IN ACCORDANCE WITH DWG. NO. CS2A-182 (WHICH SHALL BE CONSIDERED AS REFERENCE ONLY.) APPLICABLE DESIGN LIVE LOAD FOR CRANEWAY DESIGN SHALL BE MS-18 IN AASHTO OR GROSS WEIGHT OF 60 TON TRAILER, WHICHEVER PRODUCES THE SEVERE EFFECT FOR A MEMBER TO BE DESIGNED.
   - IT WILL BE THE SOLE RESPONSIBILITY OF THE CONTRACTOR TO MAINTAIN AND REPAIR THE CRANEWAY AT HIS OWN EXPENSE DURING THE ENTIRE CONSTRUCTION PERIOD.
   - DAMAGES INFLICTED ON THE CRANEWAY AS A RESULT OF TYPHOON AND FLOODS SHALL NOT BE A BASIS FOR CLAIM OF ANY MANNER AGAINST DPWH AND IT IS THE OBLIGATION OF THE CONTRACTOR TO RESTORE AND REPAIR THE DAMAGES AT HIS EXPENSE.
   - AFTER COMPLETION OF THE MAIN BRIDGE, THE CONTRACTOR IS RESPONSIBLE (AT HIS OWN EXPENSE) FOR THE REMOVAL OF THE CRANEWAY AND THE RESTORATION OF THE RIVER BANK TO ITS ORIGINAL CONDITION.

3. TEMPORARY SUPPORTS / SHORINGS FOR PIER P14 AND P21 IN DWG. NO. BM-73 AND SUSPENDED FORMWORKS FOR CENTER SPAN CLOSURE.
   - THE CONTRACTOR SHALL SUBMIT FOR THE ENGINEER'S APPROVAL WORKING DRAWINGS OF THE TEMPORARY SUPPORTS, SHORINGS & SUSPENDED FORMWORKS FOR CENTER CLOSURE INCLUDING DESIGN CALCULATIONS AS REFERRED TO DWG. NO. BM-73
   - DAMAGES INFLICTED ON THE TEMPORARY SUPPORTS AS THE RESULT OF TYPHOONS AND FLOODS SHALL NOT BE A BASIS FOR CLAIM OF ANY MANNER AGAINST DPWH AND IT IS OBLIGATION OF THE CONTRACTORS TO RESTORE AND REPAIR THE DAMAGES AT HIS EXPENSE.

4. FORM TRAVELLER (WAGON)
   - THE CONTRACTOR SHALL SUBMIT FOR THE APPROVAL OF THE ENGINEER, THE WORKING DRAWINGS FOR FORM TRAVELLER INCLUDING DESIGN CALCULATIONS, CAPACITY AND WEIGHT OF THE TRAVELLER.
   - IF THE FORM TRAVELLER'S WEIGHT DIFFER FROM THE ASSUMED WEIGHT AS USED IN THE DETAILED DESIGN, THE CONTRACTOR SHALL PROVIDE A CHECK OF STRESSES FOR ALL CONSTRUCTION STAGE & AFTER COMPLETION OF THE SUPERSTRUCTURE (INCLUDING LONG TERM EFFECTS). CAMBER SHALL ALSO BE INVESTIGATED.
   - ASSUMED WEIGHT OF FORM TRAVELLER = 600 KN

5. TENTATIVE CONSTRUCTION SCHEDULE SHOWN
   - THE TENTATIVE CONSTRUCTION SCHEDULE SHOWN SHALL BE CONSIDERED AS REFERENCE ONLY TO GUIDE THE CONTRACTOR IN THE PREPARATION OF CONSTRUCTION SCHEDULE BY PERT-CPM.
   - ACTUAL COMMENCEMENT DATE OF THE PROJECT, WHICH WILL BE DIFFERENT FROM THAT INDICATED IN THE TENTATIVE CONSTRUCTION SCHEDULE SHALL NOT BE CONSIDERED AS BASIS FOR CLAIM OF TIME EXTENSION.

NOTE :

THIS CONSTRUCTION SCHEDULE IS USED FOR REFERENCE ONLY. THE CONTRACTOR SHOULD PREPARE A MORE DETAILED CONSTRUCTION SCHEDULE CONSIDERING PLANT CAPACITIES, EQUIPMENT CAPACITY/ AVAILABILITY, LABOR CONDITIONS, CLIMATE, WORKING DAYS, ETC. FOR THE APPROVAL OF THE ENGINEER.

TENTATIVE OVERALL CONSTRUCTION SCHEDULE OF ANGAT RIVER BRIDGE CROSSING

ITEM NO.	WORK ITEM	QTY.	UNIT
1.0	MOBILIZATION AND PREPARATORY WORKS		
2.0	ERECTION OF CONCRETE BATCHING PLANT & TEMPORARY FACILITIES		
3.0	CONSTRUCTION OF ACCESS ROADS	5680	SM
4.0	CONSTRUCTION OF APPROACH SPANS		
4.1	MANILA SIDE (5 @ 30m + 5 @ 30m + 4 @ 30m)		
4.1.1	ABUTMENT 1		
4.1.2	BORED PILE CONSTRUCTION FOR PIERS	1560	LM
4.1.3	CONSTRUCTION OF PILE CAP	13	Pcs.
4.1.4	CONSTRUCTION OF COLUMNS	13	Pcs.
4.1.5	CONSTRUCTION OF COPING	13	Pcs.
4.1.6	FABRICATION OF PC AASHTO GIRDERS	56	Pcs.
4.1.7	LAUNCHING OF PC AASHTO GIRDERS	56	Pcs.
4.1.8	DECK SLAB WORKS	4053	SM
4.2	NUEVA ECIJA SIDE (5 @ 30m + 5 @ 30m)		
4.2.1	ABUTMENT 2		
4.2.2	BORED PILE CONSTRUCTION FOR PIERS	872	LM
4.2.3	CONSTRUCTION OF PILE CAP	9	Pcs.
4.2.4	CONSTRUCTION OF COLUMNS	9	Pcs.
4.2.5	CONSTRUCTION OF COPING	9	Pcs.
4.2.6	FABRICATION OF PC AASHTO GIRDERS	40	Pcs.
4.2.7	LAUNCHING OF PC AASHTO GIRDERS	40	Pcs.
4.2.8	DECK SLAB WORKS	2895	SM
5.0	MAIN BRIDGE		
5.1	INSTALLATION CRANEWAY	420	LM
5.2	TEMPORARY COFFERDAMS	8	SETS
5.3	BORED PILE CONSTRUCTION	1188	LM
5.4	PILE CAP CONSTRUCTION	8	Pcs.
5.5	PIER/COLUMN CONSTRUCTION	8	Pcs.
5.6	PIER HEAD CONSTRUCTION	6	Pcs.
5.7	CONSTRUCTION OF SIDE COPING	2	Pcs.
5.8	CONSTRUCTION OF SUPERSTRUCTURE (SIDE SPAN)	43	LM
5.9	CONSTRUCTION OF SUPERSTRUCTURE (BALANCED CANTILEVER CONSTRUCTION)	357	LM
6.0	RAILING WORKS		
6.1	RAILING INSTALLATION – MANILA SIDE APPROACH SPAN	840	LM
6.2	RAILING INSTALLATION – NUEVA ECIJA APPROACH SPAN	600	LM
6.3	RAILING INSTALLATION – MAIN BRIDGE SECTION	800	LM
7.0	BRIDGE SURFACE WORKS		
7.1	ASPHALT OVERLAY – MANILA SIDE APPROACH SPAN	3465	SM
7.2	ASPHALT OVERLAY – NUEVA ECIJA APPROACH SPAN	2475	SM
7.3	ASPHALT OVERLAY – MAIN BRIDGE SECTION	3300	SM
8.0	RIVER AND PIER PROTECTION WORKS	1	lot
9.0	MISCELLANEOUS WORKS	1	lot
10.0	CLEANING AND DEMOBILIZATION	1	lot

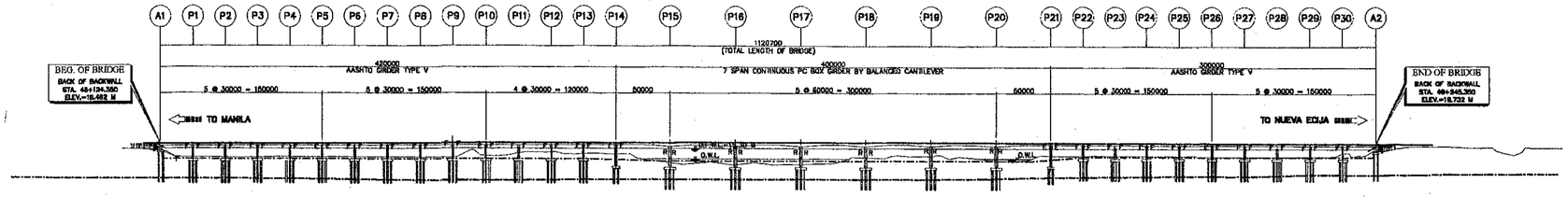

JICA JAPAN INTERNATIONAL COOPERATION AGENCY	DESIGNED	9/21/02	A.S. HAVAL
KATAHIRA & ENGINEERS INTERNATIONAL / YACHIYO ENGINEERING CO., LTD.	CHECKED	9/20/02	J. C. SANTOS
	SUBMITTED	9/14/02	TEAM LEADER

REPUBLIC OF THE PHILIPPINES
DEPARTMENT OF PUBLIC WORKS AND HIGHWAYS

P.P.S. – PMO	BUREAU OF DESIGN		OFFICE OF THE SECRETARY	
Submitted By:	Reviewed By:	Recommended By:	Recommended By: (See cover sheet for Signature)	Approved By: (See cover sheet for Signature/Approval)
DANILO C. TRAJANO, Project Director	ADRIANO M. DORDY, Chief, Bridges Division	GILBERTO S. REYES, Director IV (OIC)	MANUEL M. RONDAN, Undersecretary	SIMEON A. DATUMANONG, Secretary

PROJECT AND LOCATION :
THE DETAILED DESIGN STUDY ON UPGRADING INTER-URBAN HIGHWAY SYSTEM ALONG THE PAN-PHILIPPINE HIGHWAY (Plaridel, Cabanatuan and San Jose Bypasses)
PLARIDEL BYPASS - CONTRACT PACKAGE III

SCALE : AS SHOWN — FULL SIZE A1

SHEET CONTENTS :
BRIDGE NO. 8 ANGAT RIVER BRIDGE
TENTATIVE CONSTRUCTION SCHED. AND GEN. NOTES FOR TEMPORARY WORKS (INITIAL STAGE)

SHEET NO. : B8M-75

MISCELLANEOUS DRAWINGS

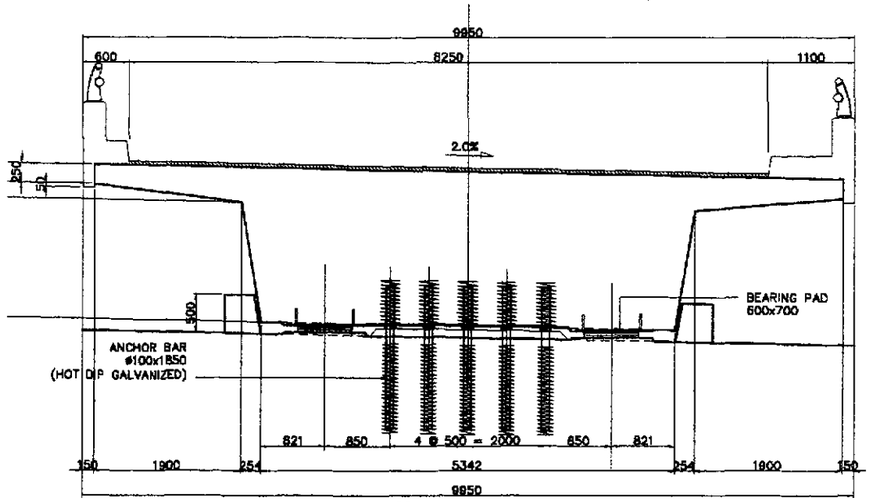

B SECTION
SCALE 1:40

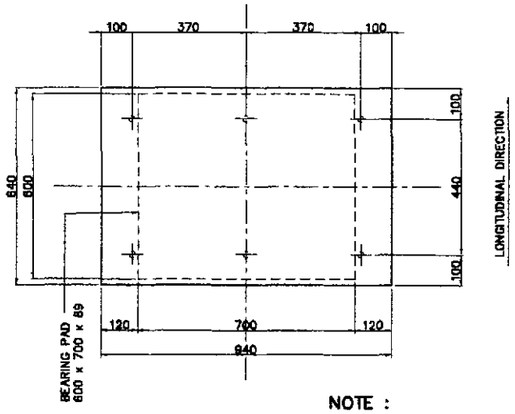

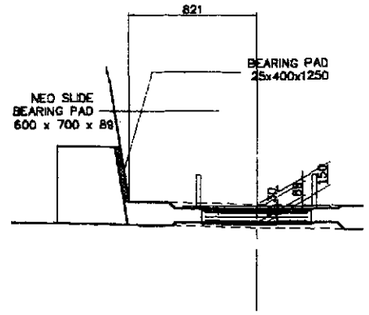

BEARINGS

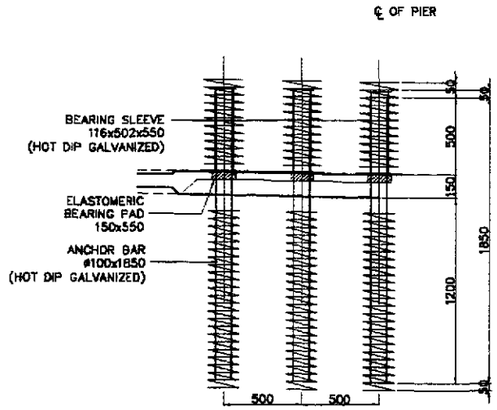

DETAILS OF ANCHOR BAR

NOTE :

1. ALL METALS SHOWN IN THIS DRAWING SHALL BE HOT-DIP GALVANIZED IN ACCORDANCE WITH THE SPECIFICATIONS FOR ZINC (HOT-GALVANIZE) COATING CONFORMING TO AASHTO M111 (ASTM A123) OR AASHTO M232 (ASTM A153). THE WEIGHT OF ZINC COATING SHALL AVERAGE NOT LESS THAN 365 g PER SQ. METER OF ACTUAL SURFACE AREA WITH NO INDIVIDUAL SPECIMEN HAVING A COATING OF LESS THAN 305 g PER SQ. METER.

E ELEVATION
SCALE 1:20

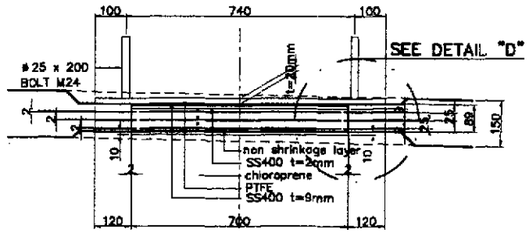

C NEO SLIDE BEARING PAD
SCALE 1:10

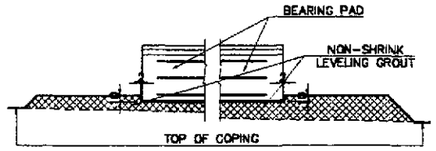

D NOTCH DETAIL FOR BEARING PAD
SCALE 1:5

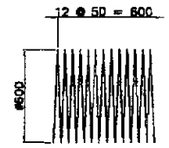

F SPIRAL @ 50 PITCH
SCALE 1:100

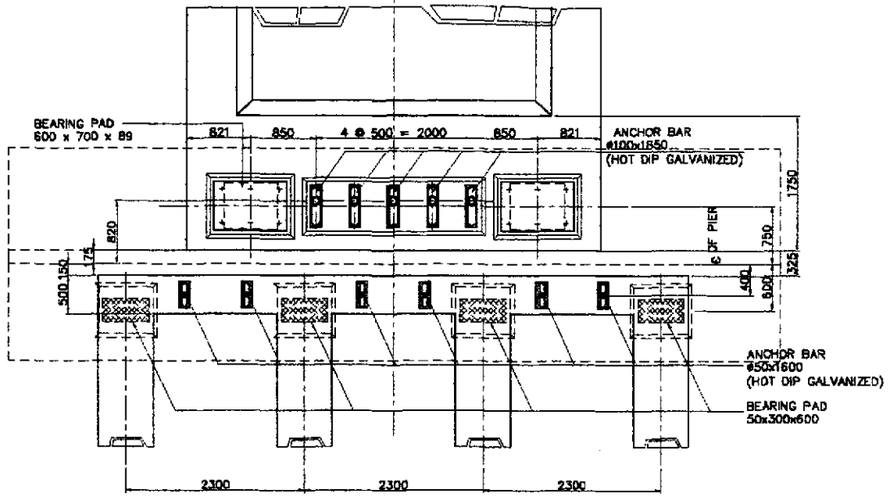

A PLAN
SCALE 1:40

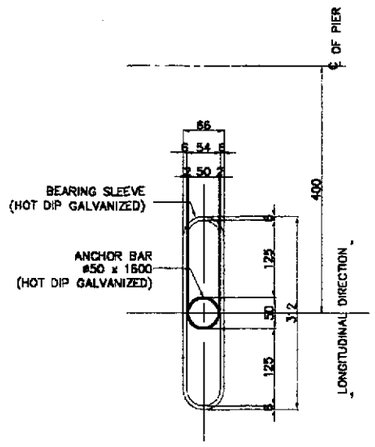

G BEARING SLEEVE DETAIL @ APPROACH SPAN SIDE
SCALE 1:5

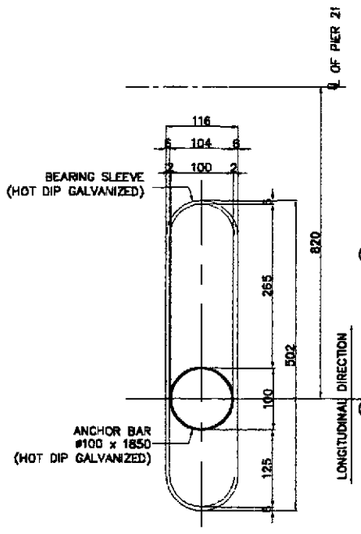

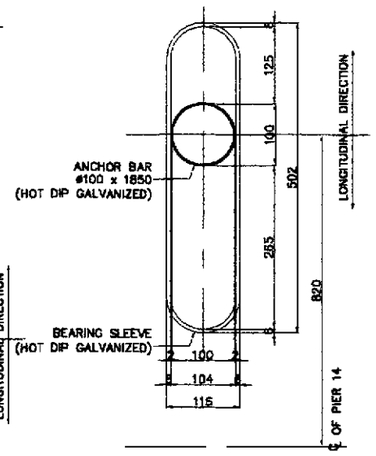

H BEARING SLEEVE DETAIL @ PCBG SIDE
SCALE 1:5

1 DETAILS OF BEARING AND ANCHOR BARS FOR PIER 14 & PIER 21
SCALE AS SHOWN

JICA
JAPAN INTERNATIONAL COOPERATION AGENCY
KEI KATAHIRA & ENGINEERS INTERNATIONAL
YEC YACHIYO ENGINEERING CO., LTD.

	DATE	SIGNATURE
DESIGNED	9/21/02	N. S. HANAI
CHECKED	9/23/02	J. C. SANTOS
SUBMITTED	10/4/02	TEAM LEADER

REPUBLIC OF THE PHILIPPINES
DEPARTMENT OF PUBLIC WORKS AND HIGHWAYS

PJHL - PMO	BUREAU OF DESIGN		OFFICE OF THE SECRETARY	
Submitted By:	Reviewed By:	Recommended By:	Recommended By: (See cover sheet for Signature)	Approved By: (See cover sheet for Signature/Approval)
DANILO C. TRAJANO	ADRIANO M. DOROY	GILBERTO S. REYES	MANUEL M. BONDAK	SIMEON A. DATUMANONG
Project Director	Chief, Bridges Division	Director IV (OIC)	Undersecretary	Secretary

PROJECT AND LOCATION :
THE DETAILED DESIGN STUDY ON UPGRADING INTER-URBAN HIGHWAY SYSTEM ALONG THE PAN-PHILIPPINE HIGHWAY (Plaridel, Cabanatuan and San Jose Bypasses)
PLARIDEL BYPASS - CONTRACT PACKAGE III

SCALE : AS SHOWN
FULL SIZE A1

SHEET CONTENTS :
BRIDGE NO. 8 ANGAT RIVER BRIDGE
DETAILS OF BEARING & ANCHOR BARS FOR PIER 14 & PIER 21 (1 OF 2)
(INITIAL STAGE)

SHEET NO. : B8M-81

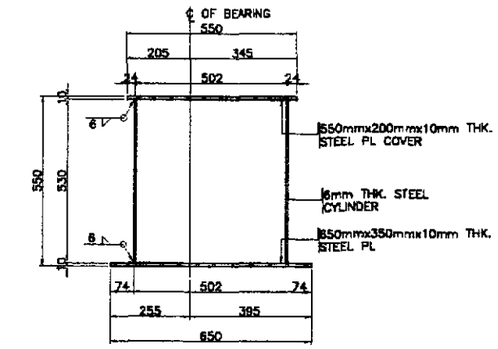

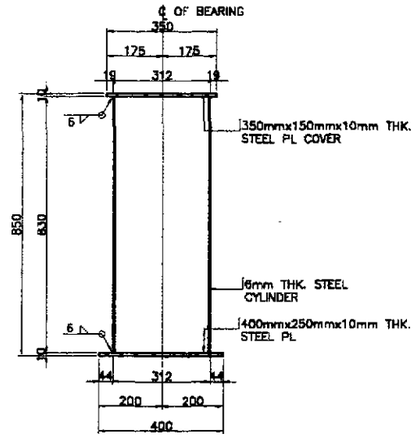

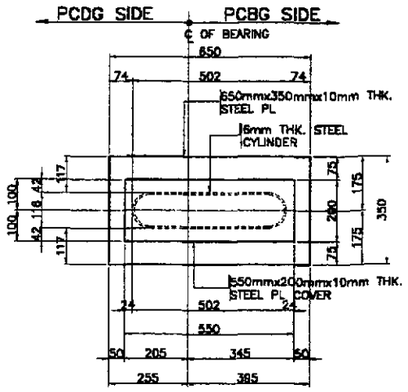

C BEARING SLEEVE DETAILS @ PCBG SIDE
SCALE 1 : 10

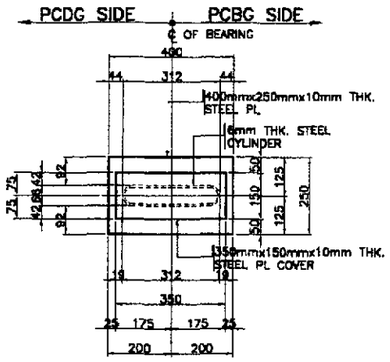

C BEARING SLEEVE DETAILS @ PCDG SIDE
SCALE 1 : 10

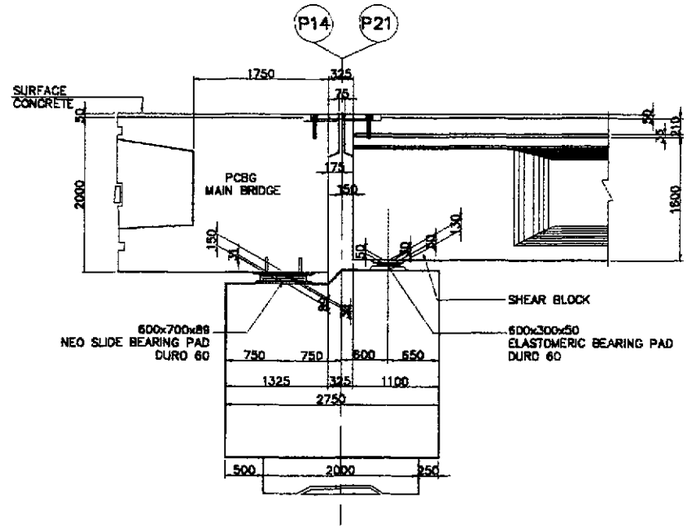

E SECTION @ BEARING PAD (PIERS P14 & P21)
SCALE 1 : 40

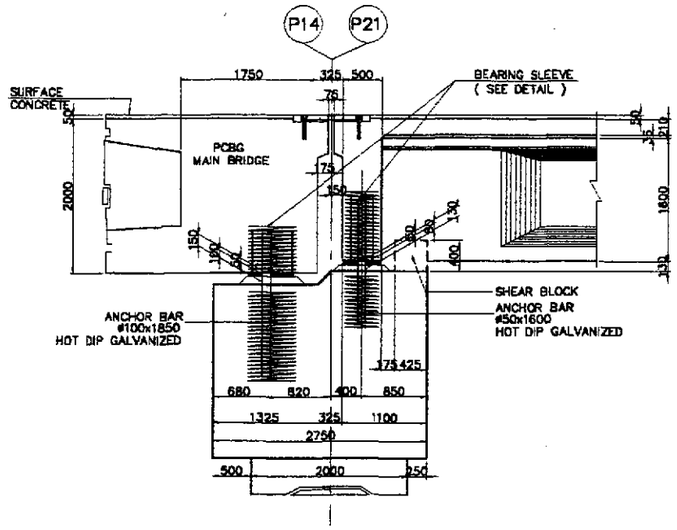

F SECTION @ ANCHOR BAR (PIERS P14 & P21)
SCALE 1 : 40

NOTE :

1. ALL METALS SHOWN IN THIS DRAWING SHALL BE HOT-DIP GALVANIZED IN ACCORDANCE WITH THE SPECIFICATIONS FOR ZINC (HOT-GALVANIZE) COATING CONFORMING TO AASHTO M111 (ASTM A123) OR AASHTO M232 (ASTM A153). THE WEIGHT OF ZINC COATING SHALL AVERAGE NOT LESS THAN 365 g PER SQ. METER OF ACTUAL SURFACE AREA WITH NO INDIVIDUAL SPECIMEN HAVING A COATING OF LESS THAN 305 g PER SQ. METER.

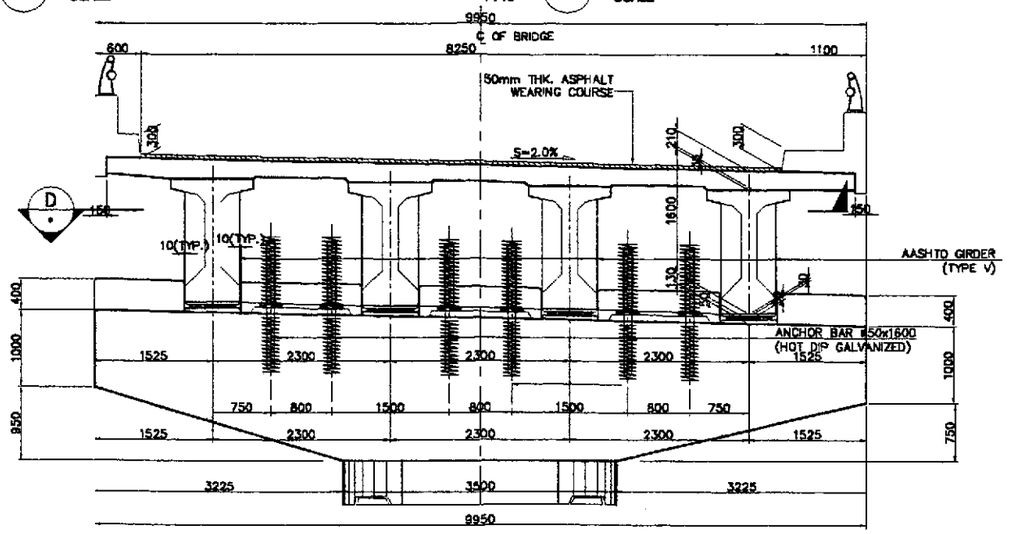

C SECTION (SHOWING REINF. CONCRETE PROTRUSION)
SCALE 1 : 40

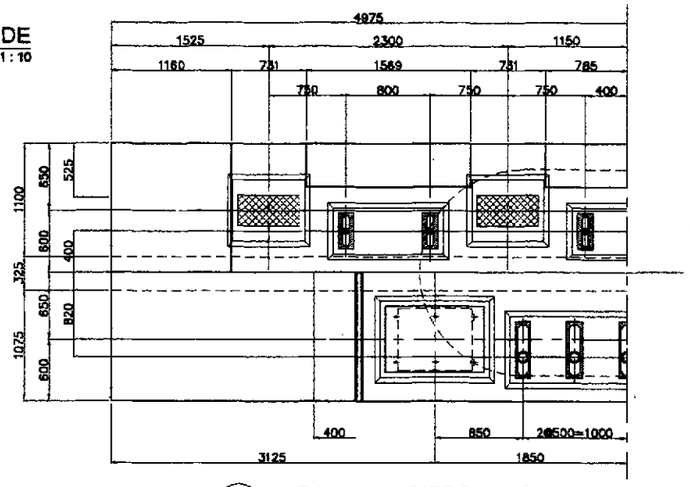

G PLAN @ PIERS P14 & 21
SCALE 1 : 30

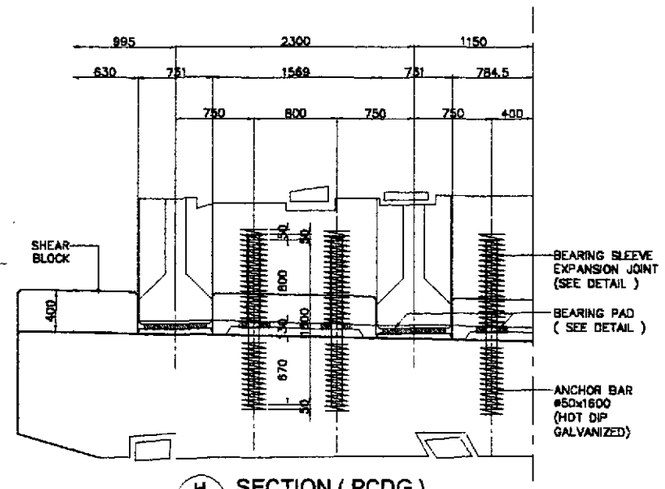

H SECTION (PCDG)
SCALE 1 : 30

1 DETAILS OF BEARING AND ANCHOR BARS FOR PIER 14 & PIER 21
SCALE AS SHOWN

JICA
JAPAN INTERNATIONAL COOPERATION AGENCY
KEI KATAHIRA & ENGINEERS INTERNATIONAL
YEC YACHIYO ENGINEERING CO., LTD.

	DATE	SIGNATURE
DESIGNED	9/21/02	J. S. NAVAL
CHECKED	9/23/02	J. C. SANTOS
SUBMITTED	10/11/02	M. KUDA TEAM LEADER

REPUBLIC OF THE PHILIPPINES
DEPARTMENT OF PUBLIC WORKS AND HIGHWAYS

PWPL – PMO	BUREAU OF DESIGN		OFFICE OF THE SECRETARY	
Submitted By:	Reviewed By:	Recommended By:	Recommended By: (See cover sheet for Signature)	Approved By: (See cover sheet for Signature/Approval)
DANILO C. TRAJANO	ADRIANO M. DOROY	GILBERTO S. REYES	MANUEL M. BONDAN	SIMEON A. DATUMANONG
Project Director	Chief, Bridges Division	Director IV (OIC)	Undersecretary	Secretary

PROJECT AND LOCATION :
THE DETAILED DESIGN STUDY ON UPGRADING INTER-URBAN HIGHWAY SYSTEM ALONG THE PAN-PHILIPPINE HIGHWAY (Plaridel, Cabanatuan and San Jose Bypasses)
PLARIDEL BYPASS - CONTRACT PACKAGE III

SCALE : AS SHOWN
FULL SIZE A1

SHEET CONTENTS :
BRIDGE NO. 8 ANGAT RIVER BRIDGE
DETAILS OF BEARING & ANCHOR BARS FOR PIER 14 & PIER 21 (2 OF 2)
(INITIAL STAGE)

SHEET NO. : B8M-82

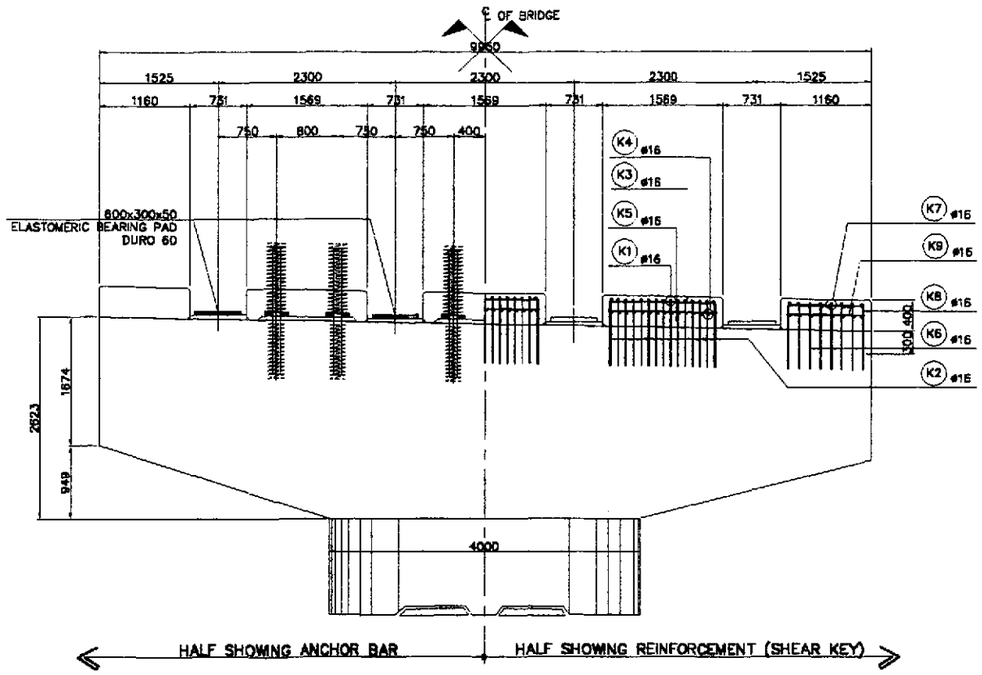

B — ELEVATION @ AASHTO GIRDER SIDE
SCALE 1:40

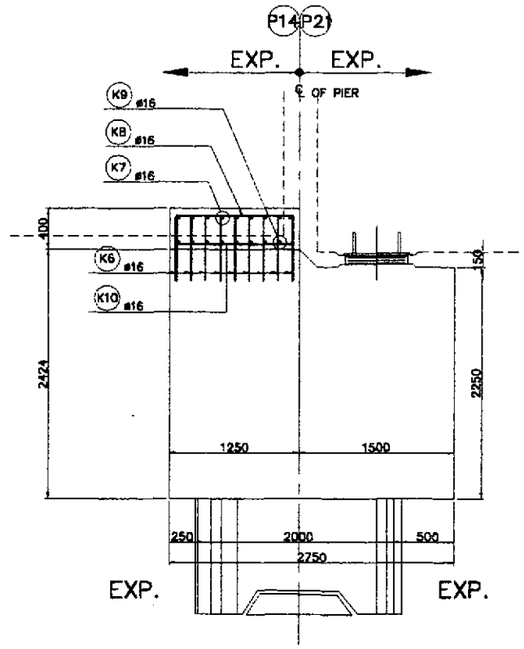

D — SECTION
SCALE 1:30

BAR BENDING DIAGRAM

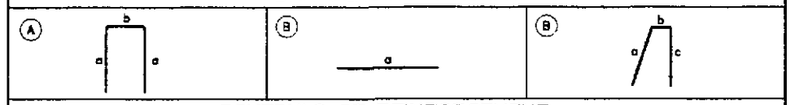

SCHEDULE OF REINFORCEMENT

LOCATION	BAR MARK	SIZE (mm)	BEND TYPE	DIMENSION(mm) OUT TO OUT a	b	c	d	e	LENGTH (mm)	NO. REQ'D.	UNIT WEIGHT (kg/m)	WEIGHT(kgs.) Grade 40	Grade 60
SHEAR KEY @ PIER P14 & P21	K1	16	A	850	325				2025	45	1.579		143.89
	K2	16	A	850	210				1910	45	1.579		135.72
	K3	16	A	850	1470				3170	6	1.579		30.03
	K4	16	STR	325					325	12	1.579		6.16
	K5	16	STR	1470					1470	39	1.579		90.52
	K6	16	A	850	155				1855	54	1.579		158.17
	K7	16	A	850	1060				2760	18	1.579		78.44
	K8	16	A	850	1150				2850	16	1.579		72.00
	K9	16	STR	1060					1060	14	1.579		23.43
	K10	16	STR	1150					1150	12	1.579		21.79
	K11	16	A	850	300				2000	30	1.579		94.74
	K12	16	A	850	100				1800	30	1.579		85.27
	K13	16	A	850	1400				3100	4	1.579		19.58
	K14	16	STR	1400					2800	4	1.579		17.68
	K15	16	STR	300					600	4	1.579		3.79
										TOTAL WEIGHT =		0.00	760.15
										TOTAL WEIGHT FOR (2) COPING =		0.00	1520.31

THE REINFORCEMENT SHOWN ON THIS TABLE IS FOR REFERENCE ONLY. THE CONTRACTOR SHOULD CHECK AND VERIFY ALL DIMENSIONS, SIZES AND QUANTITIES OF REINFORCEMENT.

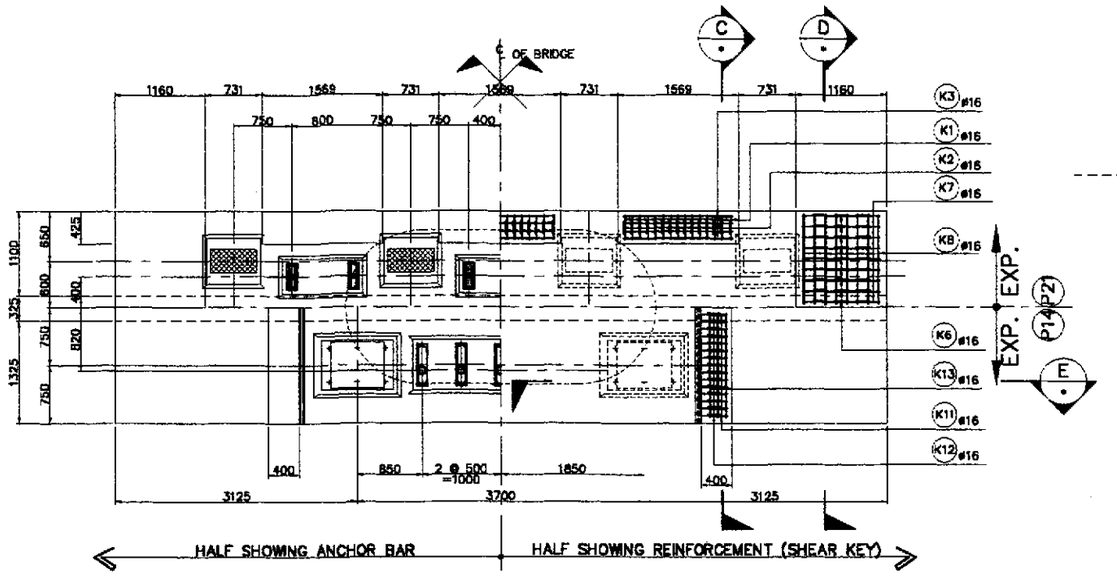

A — PLAN
SCALE 1:40

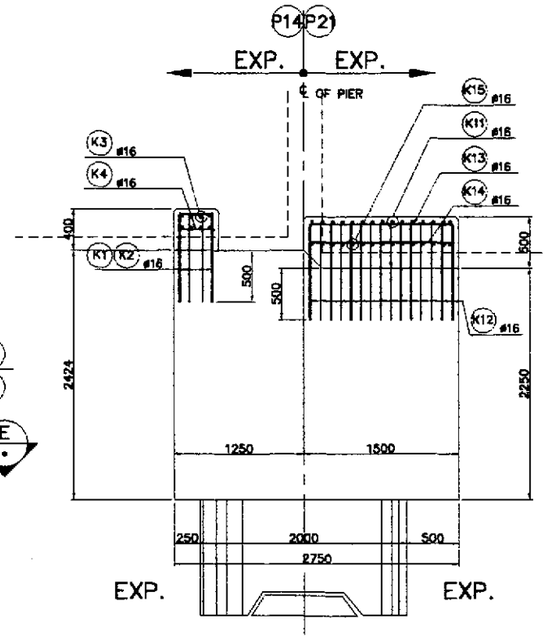

C — SECTION
SCALE 1:30

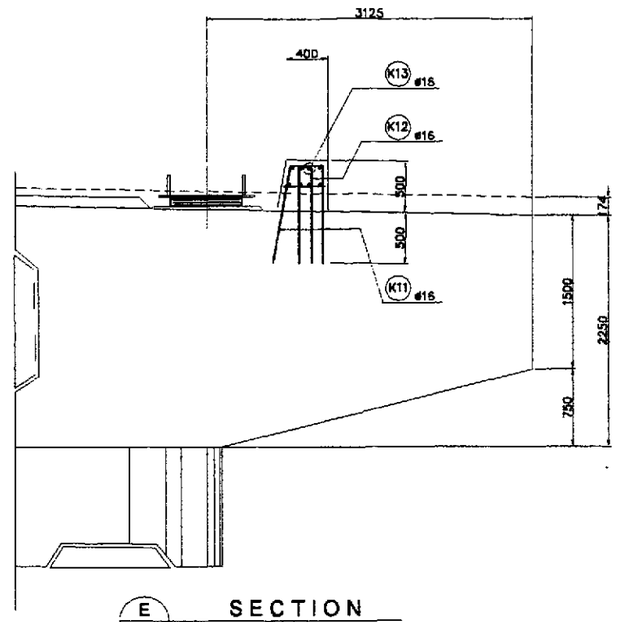

E — SECTION
SCALE 1:30

1 — DETAIL OF SHEAR KEY (PIER 14 & PIER 21)
SCALE AS SHOWN

JICA
JAPAN INTERNATIONAL COOPERATION AGENCY
KEI KATAHIRA & ENGINEERS INTERNATIONAL
YEO YACHIYO ENGINEERING CO., LTD.

	DATE	SIGNATURE
DESIGNED	9/21/02	M. SY-NAGUE
CHECKED	9/23/02	J. DE SANTOS
SUBMITTED	9/24/02	TEAM LEADER

REPUBLIC OF THE PHILIPPINES
DEPARTMENT OF PUBLIC WORKS AND HIGHWAYS

PUHL – PMO	BUREAU OF DESIGN		OFFICE OF THE SECRETARY	
Submitted By:	Reviewed By:	Recommended By:	Recommended By: (See cover sheet for Signature)	Approved By: (See cover sheet for Signature/Approval)
DANILO C. TRAJANO, Project Director	ADRIANO M. DOROY, Chief, Bridges Division	GILBERTO S. REYES, Director IV (OIC)	MANUEL M. BONGAN, Undersecretary	SIMEON A. DATUMANONG, Secretary

PROJECT AND LOCATION :
THE DETAILED DESIGN STUDY ON UPGRADING INTER-URBAN HIGHWAY SYSTEM ALONG THE PAN-PHILIPPINE HIGHWAY (Plaridel, Cabanatuan and San Jose Bypasses)
PLARIDEL BYPASS - CONTRACT PACKAGE III

SCALE : AS SHOWN
FULL SIZE A1

SHEET CONTENTS :
BRIDGE NO. 8 ANGAT RIVER BRIDGE
DETAIL OF SHEAR KEY
(P14 & P21)
(INITIAL STAGE)

SHEET NO. : B8M-83

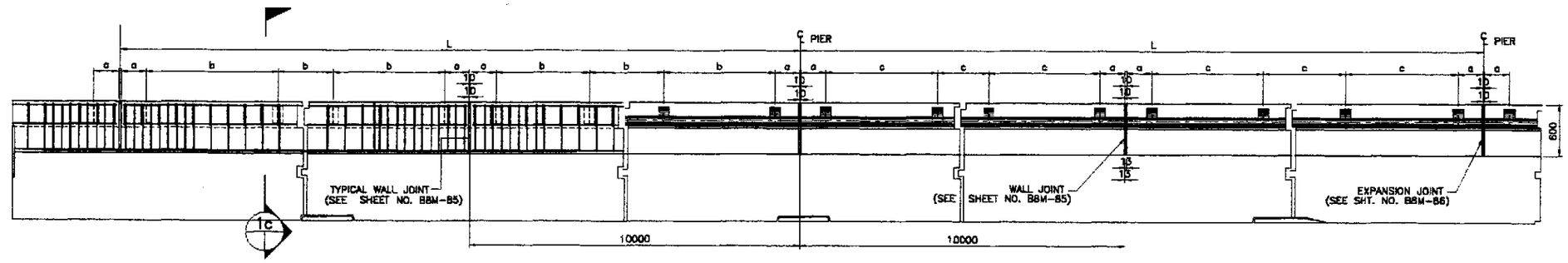

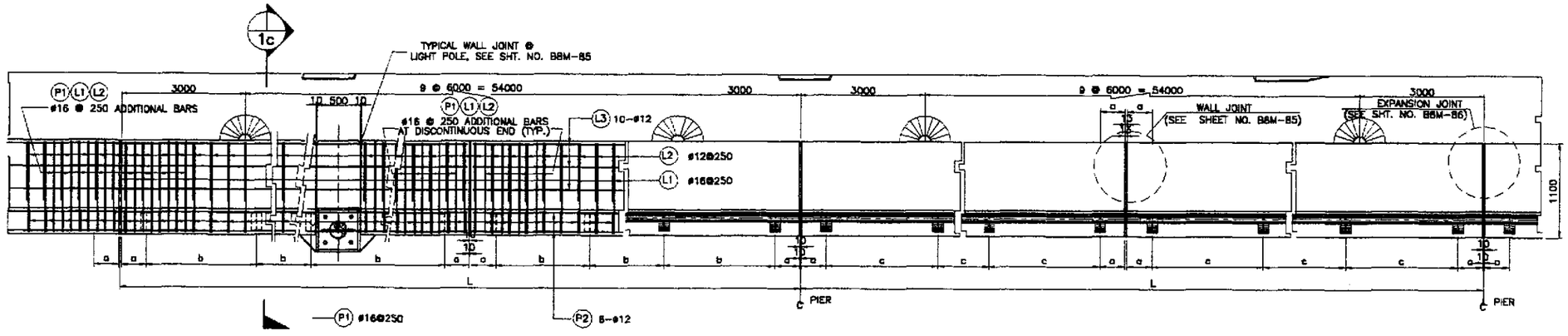

1a PLAN
NOT TO SCALE

SCHEDULE OF RAILING					
SPAN LENGTH (m)	NO. OF DEFLECTION JT. INSIDE SPAN	NO. OF RAIL POST PER SIDE/SPAN	a (mm)	b (mm)	c (mm)
60.00	5	36	250	1895	1895
50.00	4	30	250	1895	1895

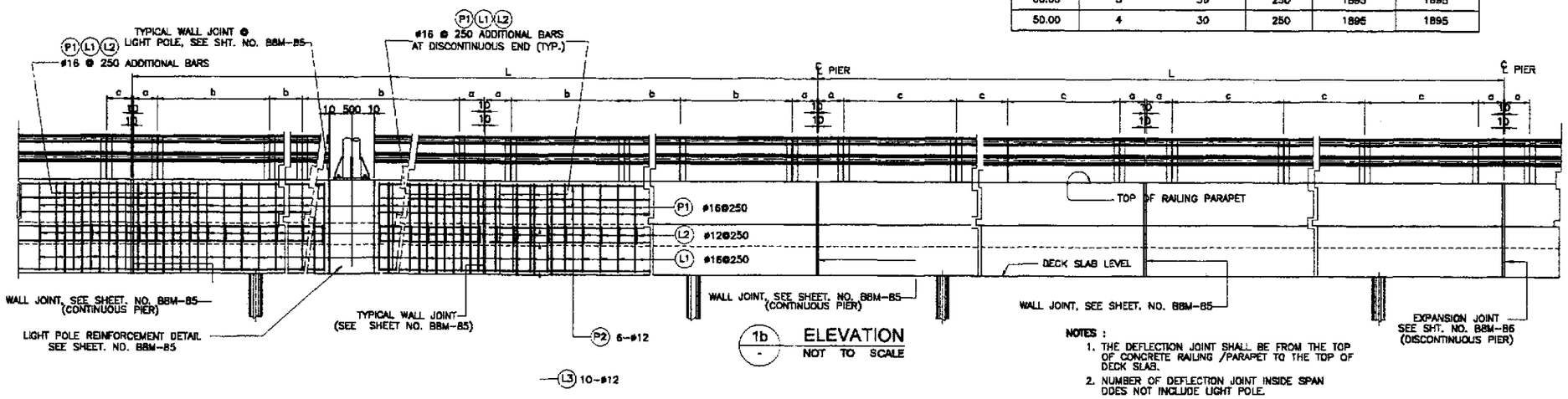

1b ELEVATION
NOT TO SCALE

NOTES :
1. THE DEFLECTION JOINT SHALL BE FROM THE TOP OF CONCRETE RAILING /PARAPET TO THE TOP OF DECK SLAB.
2. NUMBER OF DEFLECTION JOINT INSIDE SPAN DOES NOT INCLUDE LIGHT POLE.

1 TYPICAL RAILING AND SIDEWALK DETAILS
SCALE AS SHOWN

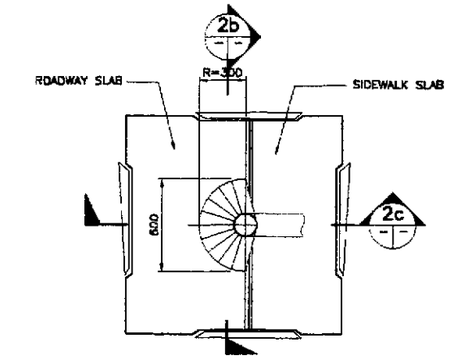

2a PLAN

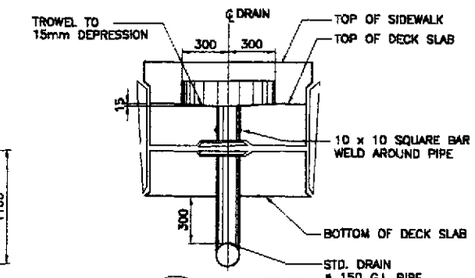

2b SECTION

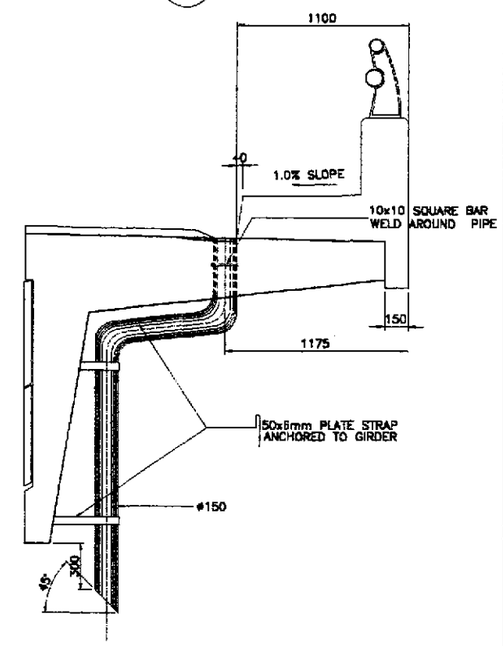

2c SECTION

2 TYPICAL DRAIN DETAILS
SCALE 1:20

JICA
JAPAN INTERNATIONAL COOPERATION AGENCY
KATAHIRA & ENGINEERS INTERNATIONAL
YACHIYO ENGINEERING CO., LTD.

	DATE	SIGNATURE
DESIGNED	9/20/02	A. S. HANAI
CHECKED	9/23/02	J. C. SANTOS
SUBMITTED	10/14/02	MA. KIMUNA TEAM LEADER

REPUBLIC OF THE PHILIPPINES
DEPARTMENT OF PUBLIC WORKS AND HIGHWAYS

PUHL – PMO	BUREAU OF DESIGN		OFFICE OF THE SECRETARY	
Submitted By:	Reviewed By:	Recommended By:	Recommended By: (See cover sheet for Signature)	Approved By: (See cover sheet for Signature/Approval)
DANILO C. TRAJANO	ADRIANO M. DOROY	GILBERTO S. REYES	MANUEL M. BONDOAN	SIMEON A. DATUMANONG
Project Director	Chief, Bridges Division	Director IV (O/C)	Undersecretary	Secretary

PROJECT AND LOCATION :	SCALE :	SHEET CONTENTS :	SHEET NO. :
THE DETAILED DESIGN STUDY ON UPGRADING INTER-URBAN HIGHWAY SYSTEM ALONG THE PAN-PHILIPPINE HIGHWAY (Plaridel, Cabanatuan and San Jose Bypasses)	AS SHOWN	BRIDGE NO. 8 ANGAT RIVER BRIDGE TYPICAL SIDEWALK, RAILING AND DRAIN DETAIL (INITIAL STAGE)	B8M-84
PLARIDEL BYPASS - CONTRACT PACKAGE III	FULL SIZE A1		

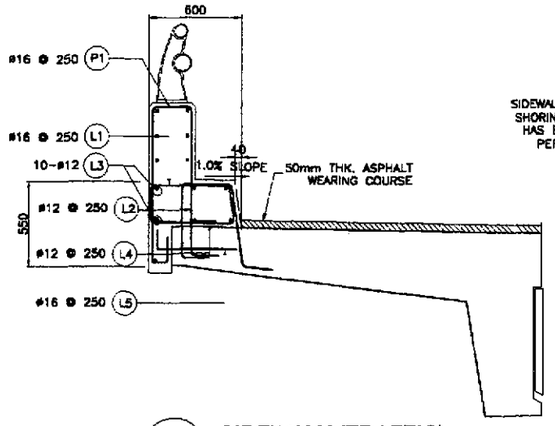

A1 SIDEWALK (TRAFFIC)
SCALE 1:20

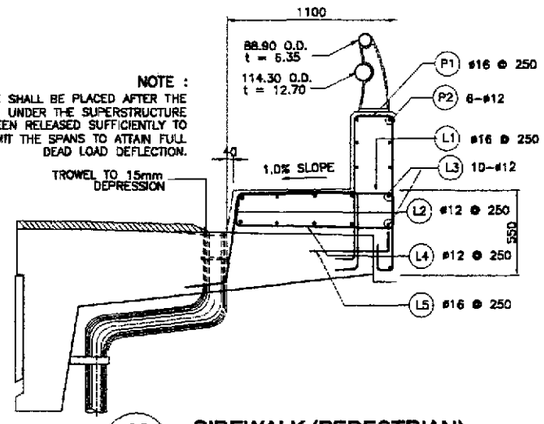

A2 SIDEWALK (PEDESTRIAN)
SCALE 1:20

A SIDEWALK REINFORCEMENT DETAILS
SCALE AS SHOWN

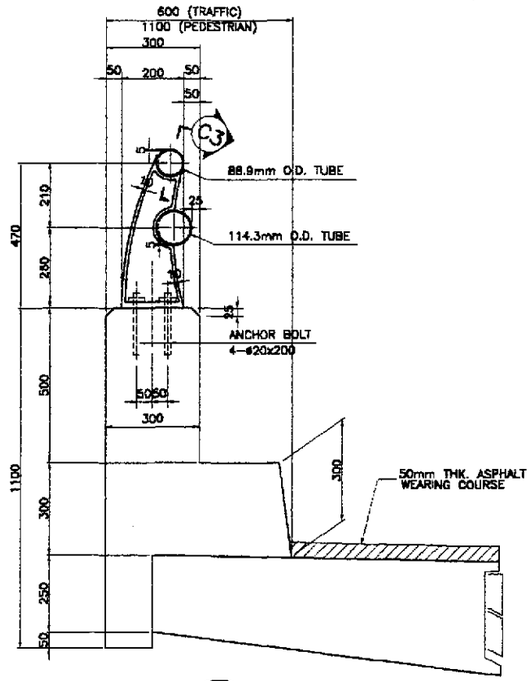

C1 SECTION
SCALE 1:10

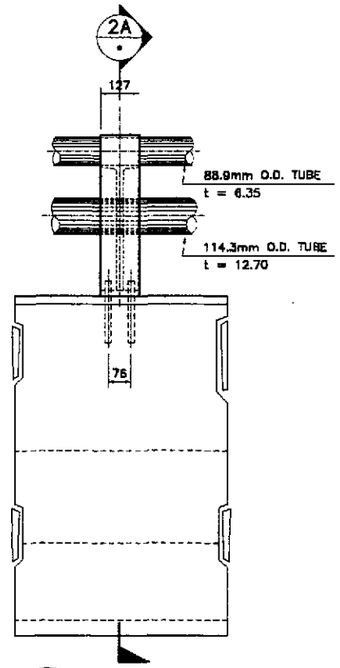

C2 ELEVATION
SCALE 1:10

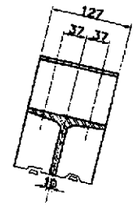

C3 SECTION
SCALE 1:5

C DETAILED DIMENSION OF RAILING
SCALE AS SHOWN

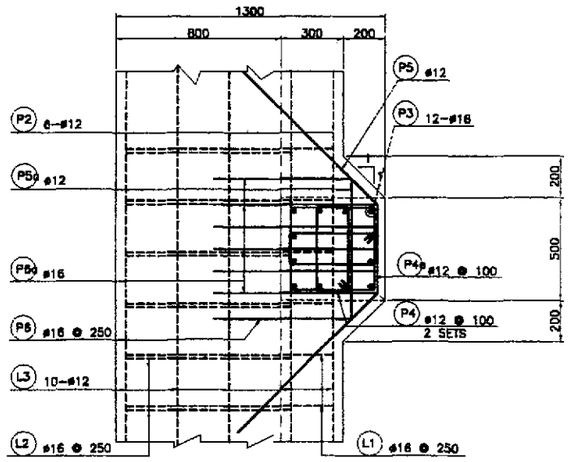

B2 SECTION
SCALE 1:15

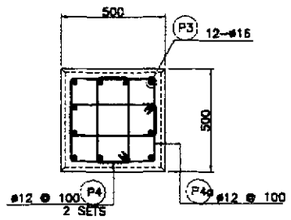

B3 SECTION
SCALE 1:15

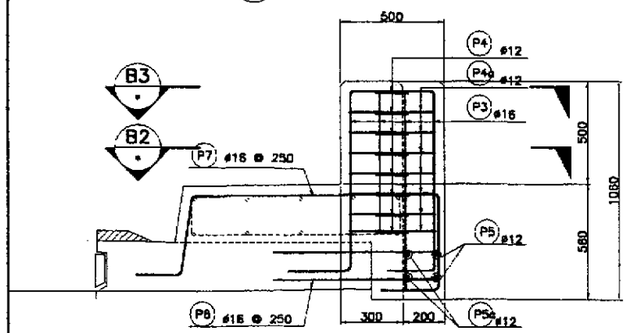

B1 ELEVATION
SCALE 1:15

B LIGHT POLE BASE REINF. DETAIL
SCALE AS SHOWN

NOTES :

1. FOR LOCATION OF JOINTS SEE DWG. NO. B8M-84.
2. PROVIDE DEFLECTION JOINTS AT EVERY CONTINUOUS PIER EXCEPT @ LIGHT POST POSITION. ALSO PROVIDE FIVE (5) ADDITIONAL DEFLECTION JOINTS IN BETWEEN PIERS FOR 60 METERS SPAN AND FOUR (4) ADDITIONAL DEFLECTION JOINTS IN BETWEEN PIERS FOR 50 METERS SPAN.
3. PROVIDE ADDITIONAL BARS ON BOTH SIDES FOR EVERY DEFLECTION AND EXPANSION JOINTS.

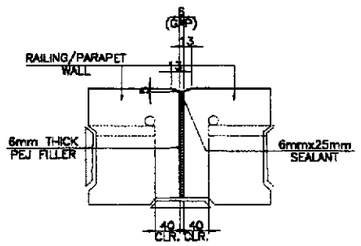

DETAILS @ WALL JOINT

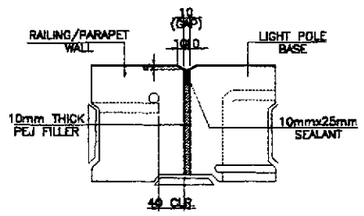

DETAILS @ LIGHT POLE BASE / WALL JOINT

D DETAILS OF DEFLECTION JOINTS
SCALE 1:5

1 SIDEWALK & LIGHT POLE BASE REINF. DETAILS, RAILING DIMENSIONS
SCALE AS SHOWN

BAR BENDING DIAGRAM

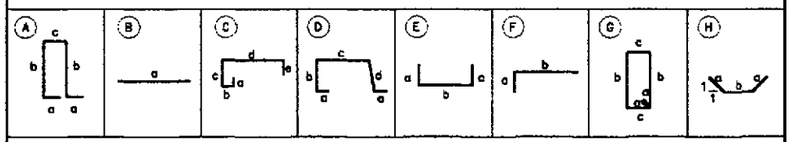

SCHEDULE OF REINFORCEMENT

LOCATION	BAR MARK	SIZE (mm)	BEND TYPE	DIMENSION(mm) OUT TO OUT a	b	c	d	e	LENGTH (mm)	NO. REQ'D.	UNIT WEIGHT (kg/m)	WEIGHT(kgs.) Grade 40	Grade 60
PARAPET	P1	16	A	300	720	220			2260	1920	1.578	6847	
	P2	12	B	9874					9874	480	0.888	4209	
									TOTAL WEIGHT FOR 7 SPANS = 11056 Kgs.				
SIDEWALK PEDESTRIAN	L1	16	C	100	70	450	980	260	1860	1920	1.578	5635	
	L2	12	D	200	375	700	375		1850	1920	0.888	3154	
	L3	12	B	9874					9874	440	0.888	3858	
	L4	12	E	200	980				1380	1920	0.888	2353	
	L5	12	F	200	400				600	1920	0.888	1023	
									TOTAL WEIGHT FOR 7 SPANS = 16023 Kgs.				
SIDEWALK TRAFFIC	L1	16	C	100	70	4750	480	260	5860	1920	1.578	17148	
	L2	12	D	200	375	200	375		1350	1920	0.888	2302	
	L3	12	B	9874					9874	280	0.888	2455	
	L4	12	E	220	480				880	1920	0.888	1500	
	L5	12	F	200	400				600	1920	0.888	1023	
									TOTAL WEIGHT FOR 7 SPANS = 24428 Kgs.				
LIGHT POST	P3	16	F	300	910				1210	12	1.578	23	
	P4	12	G	150	150	420			1440	16	0.888	20	
	P4a	12	G	150	420	420			1980	8	0.888	14	
	P5	12	H	1000	300				2500	2	0.888	4	
	P5a	12	B	700					700	2	0.888	1	
	P6	16	E	650	130				1430	5	1.578	11	
	P6a	16	E	750	130				1630	5	1.578	13	
	P7	12	C	100	250	4750	1160	260	6520	3	0.888	17	
									TOTAL WEIGHT PER POST = 103 Kgs.				
									TOTAL WEIGHT FOR 14 POST = 1236 Kgs.				

THE REINFORCEMENT SHOWN ON THIS TABLE IS FOR REFERENCE ONLY. THE CONTRACTOR SHOULD CHECKED AND VERIFY ALL DIMENSIONS, SIZES AND QUANTITIES OF REINFORCEMENT.

JICA
JAPAN INTERNATIONAL COOPERATION AGENCY
KEI KATAHIRA & ENGINEERS INTERNATIONAL
YEC YACHIYO ENGINEERING CO., LTD.

	DATE	SIGNATURE
DESIGNED	9/21/02	M. S. NAPIL
CHECKED	9/23/02	J. C. SANTOS
SUBMITTED	10/11/02	TEAM LEADER

REPUBLIC OF THE PHILIPPINES
DEPARTMENT OF PUBLIC WORKS AND HIGHWAYS

PJHL – PMO	BUREAU OF DESIGN		OFFICE OF THE SECRETARY	
Submitted By:	Reviewed By:	Recommended By:	Recommended By: (See cover sheet for Signature)	Approved By: (See cover sheet for Signature/Approval)
DANILO C. TRAJANO, Project Director	ADRIANO M. DOROY, Chief, Bridges Division	GILBERTO S. REYES, Director IV (OIC)	MANUEL M. BONDAN, Undersecretary	SIMEON A. DATUMANONG, Secretary

PROJECT AND LOCATION :
THE DETAILED DESIGN STUDY ON UPGRADING INTER-URBAN HIGHWAY SYSTEM ALONG THE PAN-PHILIPPINE HIGHWAY (Plaridel, Cabanatuan and San Jose Bypasses)
PLARIDEL BYPASS - CONTRACT PACKAGE III

SCALE : AS SHOWN
FULL SIZE A1

SHEET CONTENTS :
BRIDGE NO. 8 ANGAT RIVER BRIDGE
SIDEWALK & LIGHT POLE BASE REINF. DETAILS, RAILING DIMENSIONS (INITIAL STAGE)

SHEET NO. : B8M-85

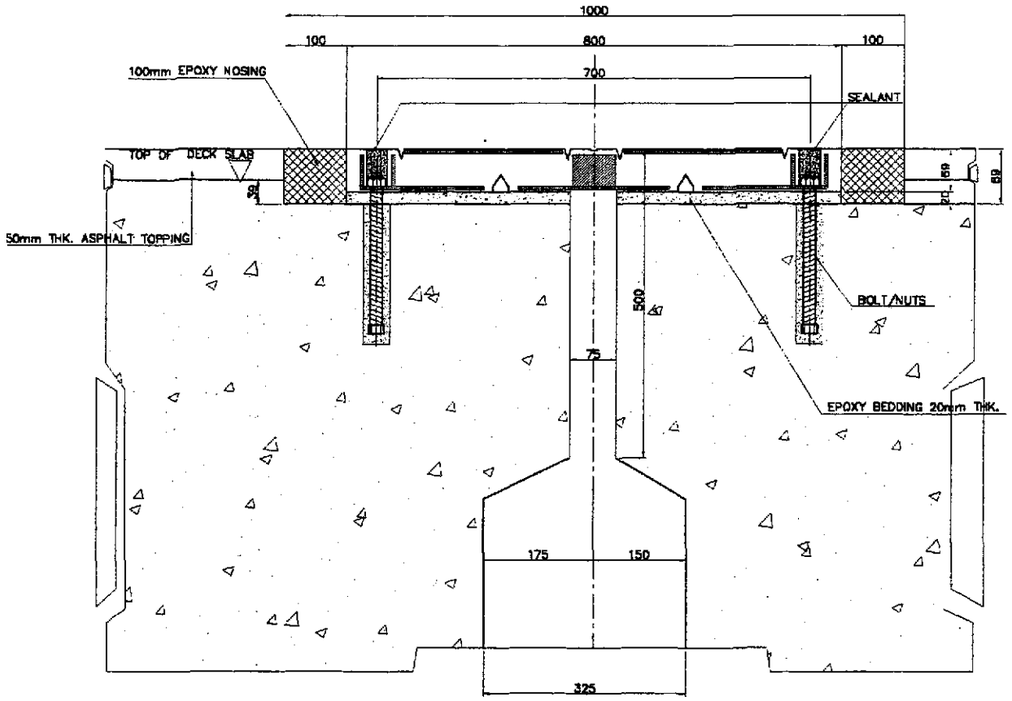

A SECTION (M200 MULTIFLEX)
SCALE 1:5

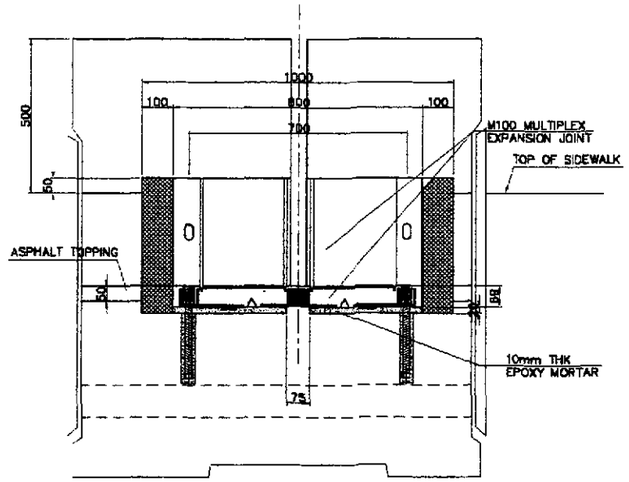

C DETAIL
SCALE 1:10

NOTES :

1. THE EXPANSION JOINT SHALL BE MULTIPLEX M200 OR EQUIVALENT.
2. THE CONTRACTOR SHALL GUARANTEE WATERTIGHTNESS OF EXPANSION JOINTS INCLUDING SIDEWALK JOINTS.
3. THE EXPANSION JOINT SHALL HAVE A 15-YEAR WARRANTY PERIOD. DAMAGES ON THE JOINTS WITHIN THIS PERIOD SHALL BE REPLACED BY THE CONTRACTOR.
4. VERIFY ACTUAL DIMENSIONS OF EXPANSION JOINT BLOCK-OUT AS PER MANUFACTURER'S RECOMMENDATION.

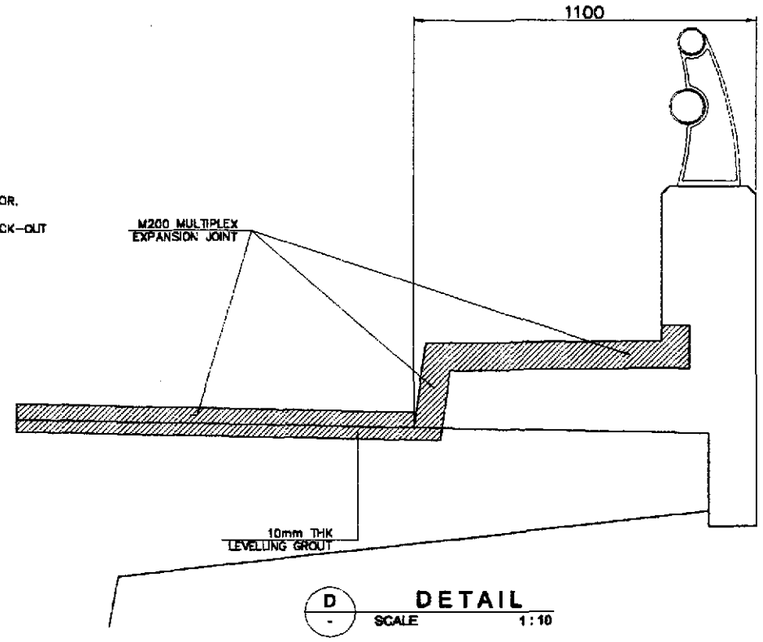

D DETAIL
SCALE 1:10

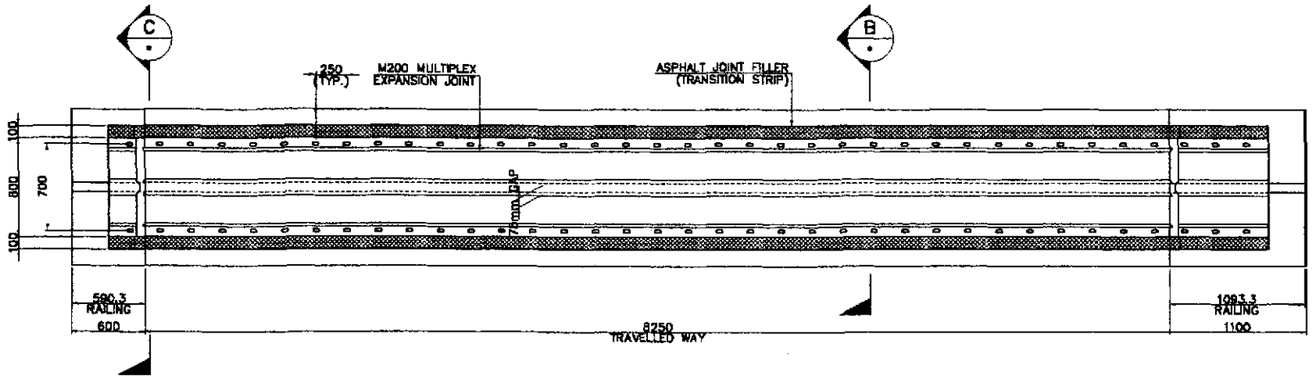

A PLAN (M200 MULTIFLEX)
SCALE 1:25

LOCATION	EXPANSION JOINT TYPE	MOVEMENT (mm)	LENGTH (m)
PIER 14	MULTIPLEX M200	±100(TOTAL=200mm)	10.20
PIER 21	MULTIPLEX M200	±100(TOTAL=200mm)	10.20

1 EXPANSION JOINT DETAILS
SCALE AS SHOWN

JICA
JAPAN INTERNATIONAL COOPERATION AGENCY
KEI KATAHIRA & ENGINEERS INTERNATIONAL
YEC YACHIYO ENGINEERING CO., LTD.

	DATE	SIGNATURE
DESIGNED	9/21/02	M. SH. MANE
CHECKED	9/23/02	J. C. SANTOS
SUBMITTED	10/1/02	Ma. [illegible] TEAM LEADER

REPUBLIC OF THE PHILIPPINES
DEPARTMENT OF PUBLIC WORKS AND HIGHWAYS

FJHL - PMO	BUREAU OF DESIGN		OFFICE OF THE SECRETARY	
Submitted By:	Reviewed By:	Recommended By:	Recommended By: (See cover sheet for Signature)	Approved By: (See cover sheet for Signature/Approval)
DANILO C. TRAJANO	ADRIANO M. DOROY	GILBERTO S. REYES	MANUEL M. BONDAN	SIMEON A. DATUMANONG
Project Director	Chief, Bridges Division	Director IV (OIC)	Undersecretary	Secretary

PROJECT AND LOCATION :
THE DETAILED DESIGN STUDY ON UPGRADING INTER-URBAN HIGHWAY SYSTEM ALONG THE PAN-PHILIPPINE HIGHWAY (Plaridel, Cabanatuan and San Jose Bypasses)
PLARIDEL BYPASS - CONTRACT PACKAGE III

SCALE : AS SHOWN
FULL SIZE A1

SHEET CONTENTS :
BRIDGE NO. 8 ANGAT RIVER BRIDGE
EXPANSION JOINT DETAILS
(INITIAL STAGE)

SHEET NO. : B8M-86

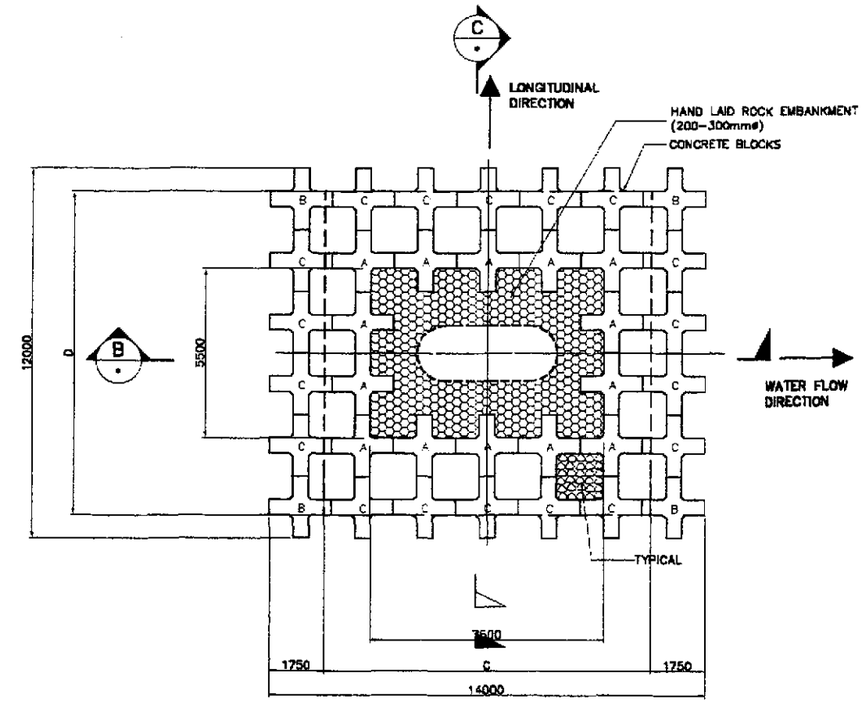

A PLAN SHOWING CONCRETE BLOCK ARRANGEMENT
SCALE 1:100

PIER NO.	COLUMN DIMENSION		FOOTING DIMENSION			ELEVATION	
	A	B	C	D	E	ELEV 1	ELEV 2
P14	4000	2000	10500	6750	2250	+9.23	+0.99
P15	4500	2500	10500	10500	2500	+1.053	−2.16
P16	4500	2500	10500	10500	2500	−0.348	−2.02
P17	4500	2500	10500	10500	2500	−0.589	−1.97
P18	4500	2500	10500	10500	2500	+4.490	−1.97
P19	4500	2500	10500	10500	2500	+6.416	−2.02
P20	4500	2500	10500	10500	2500	+3.990	−2.12
P21	4000	2000	10500	6750	2250	+8.081	+0.98

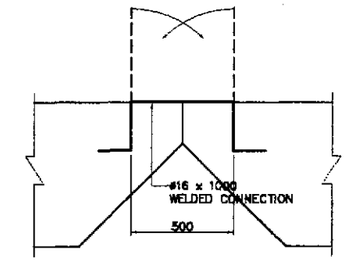

G JOINT CONNECTION DETAIL
SCALE 1:15

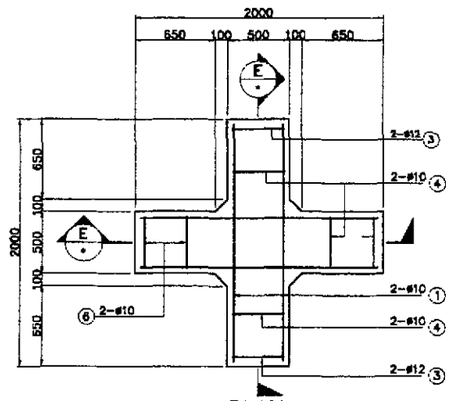

PLAN

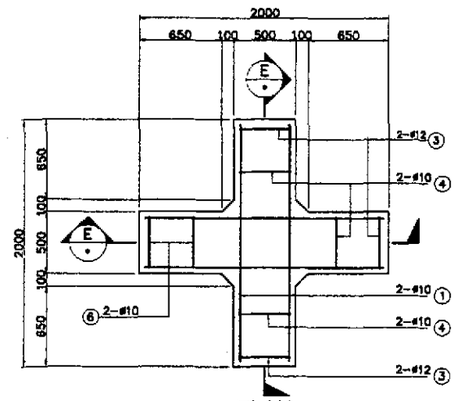

PLAN

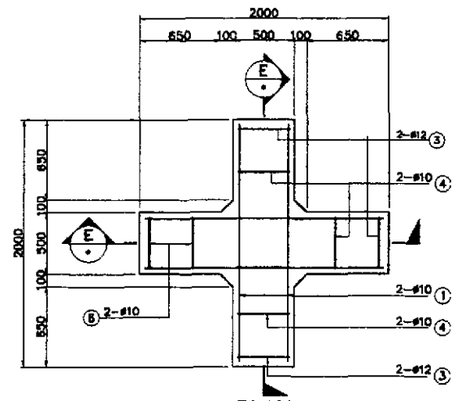

PLAN

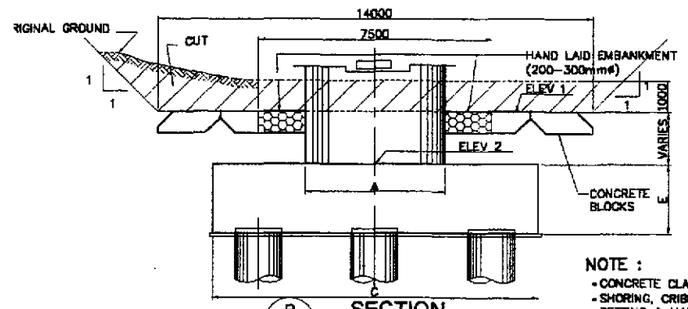

B SECTION
SCALE 1:100

NOTE :
- CONCRETE CLASS "B" FOR CONCRETE BLOCKS.
- SHORING, CRIBBING & RELATED WORK REQUIRED FOR CONCRETE BLOCK SETTING & HAND LAID EMBANKMENT SC SPECIFIED IN THIS DRAWING WILL NOT BE PAID FOR DIRECTLY, BUT SHALL BE CONSIDERED AS A SUBSIDIARY OBLIGATION OF THE CONTRACTOR UNDER PAY ITEMS 103(2)c RIVERBED EXCAVATION (AOWL) & 103(2)c RIVERBED EXCAVATION (BOWL).

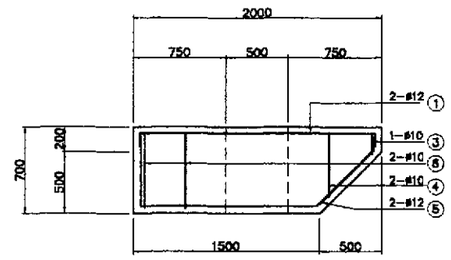

SECTION

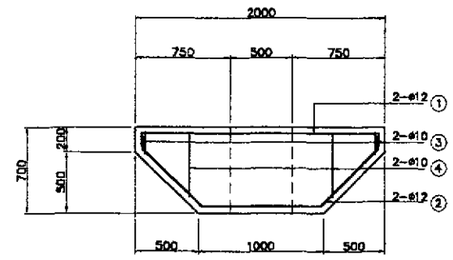

SECTION

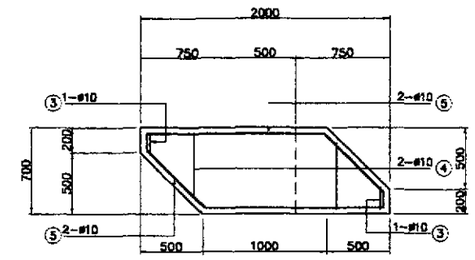

SECTION

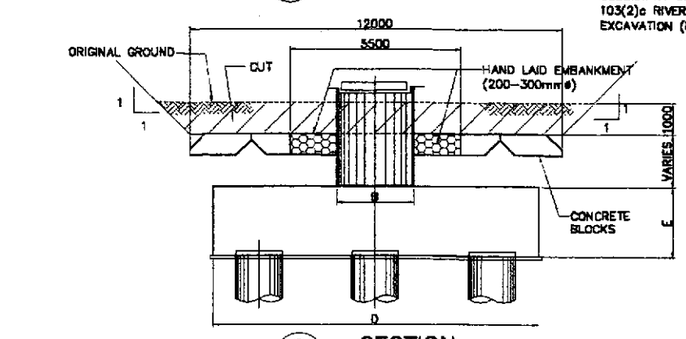

C SECTION
SCALE 1:100

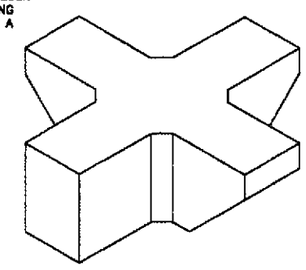

ISOMETRIC VIEW

D TYPE-A CONC. BLOCK
SCALE 1:25

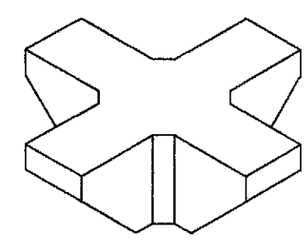

ISOMETRIC VIEW

E TYPE-B CONC. BLOCK
SCALE 1:25

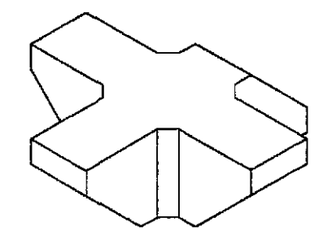

ISOMETRIC VIEW

F TYPE-C CONC. BLOCK
SCALE 1:25

JICA
JAPAN INTERNATIONAL COOPERATION AGENCY
KEI KATAHIRA & ENGINEERS INTERNATIONAL
YEC YACHIYO ENGINEERING CO., LTD.

	DATE	SIGNATURE
DESIGNED	9/20/02	M.J.S. Navarro
CHECKED	9/20/02	J.C. Santos
SUBMITTED	10/4/02	M. Suyama TEAM LEADER

REPUBLIC OF THE PHILIPPINES
DEPARTMENT OF PUBLIC WORKS AND HIGHWAYS

PJHL – PMO	BUREAU OF DESIGN		OFFICE OF THE SECRETARY	
Submitted By:	Reviewed By:	Recommended By:	Recommended By: (See cover sheet for Signature)	Approved By: (See cover sheet for Signature/Approval)
DANILO C. TRAJANO	PERFECTO L. ZAPLAN JR.	GILBERTO S. REYES	MANUEL M. BONOAN	SIMEON A. DATUMANONG
Project Director	Chief, Hydraulics Division (OIC)	Director IV (OIC)	Undersecretary	Secretary

PROJECT AND LOCATION :
THE DETAILED DESIGN STUDY ON UPGRADING INTER-URBAN HIGHWAY SYSTEM ALONG THE PAN-PHILIPPINE HIGHWAY (Plaridel, Cabanatuan and San Jose Bypasses)
PLARIDEL BYPASS - CONTRACT PACKAGE III

SCALE : AS SHOWN
FULL SIZE A1

SHEET CONTENTS :
BRIDGE NO. 8 ANGAT RIVER BRIDGE
DETAILS OF PIER PROTECTION (PIER 14 TO PIER 21)
(INITIAL STAGE)

SHEET NO. : B8M-87

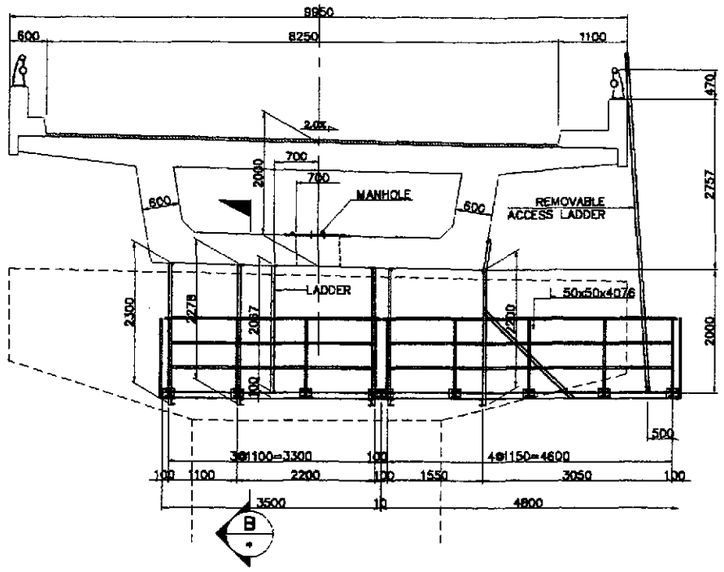

B ELEVATION
SCALE 1:50

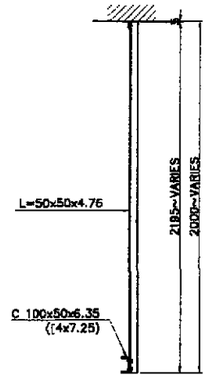

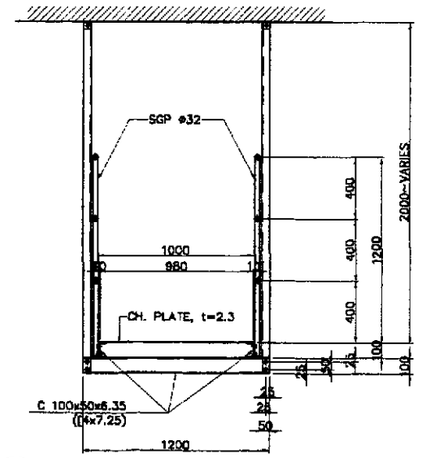

B SECTION
SCALE 1:20

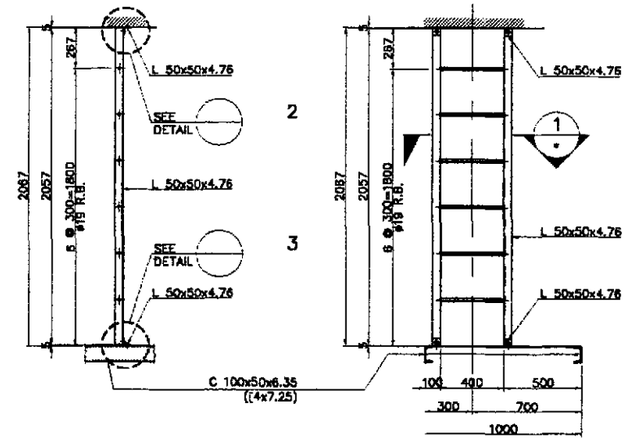

C DETAIL OF LADDER
SCALE 1:20

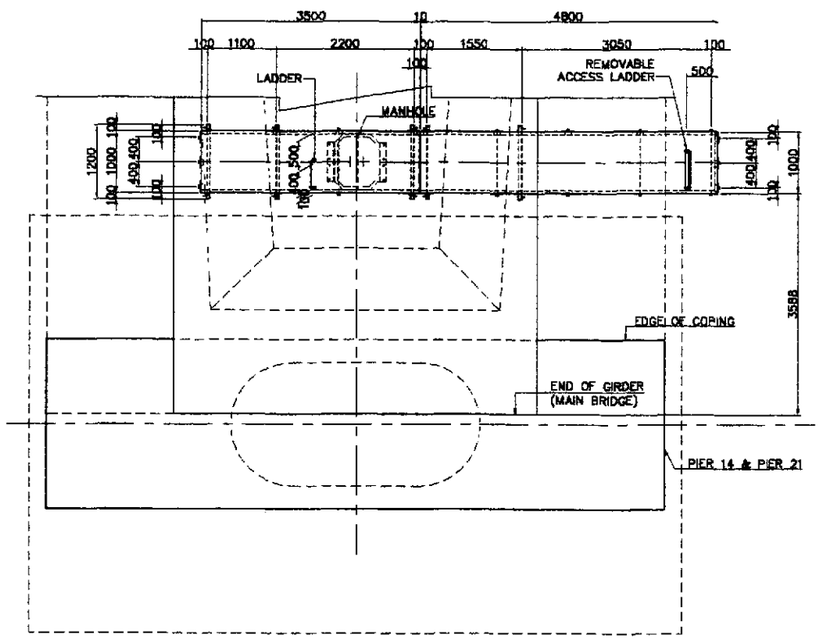

A PLAN
SCALE 1:50

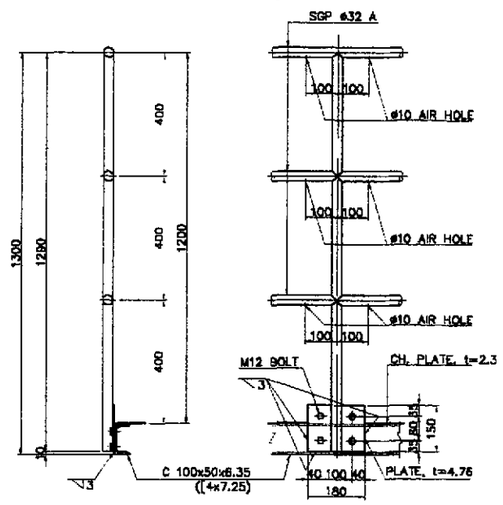

D DETAIL OF HANDRAIL
SCALE 1:10

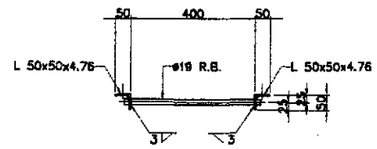

1 SECTION
SCALE 1:10

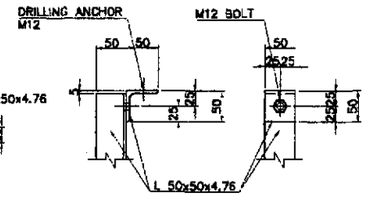

2 DETAIL
SCALE 1:5

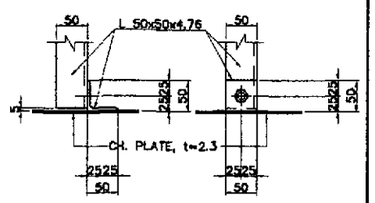

3 DETAIL
SCALE 1:5

NOTE :
1. ALL MATERIALS SHOWN IN THIS DRAWINGS, UNLESS OTHERWISE NOTED, SHALL BE ZINC, HOT DIP GALVANIZED (JIS H8641 HD 255)

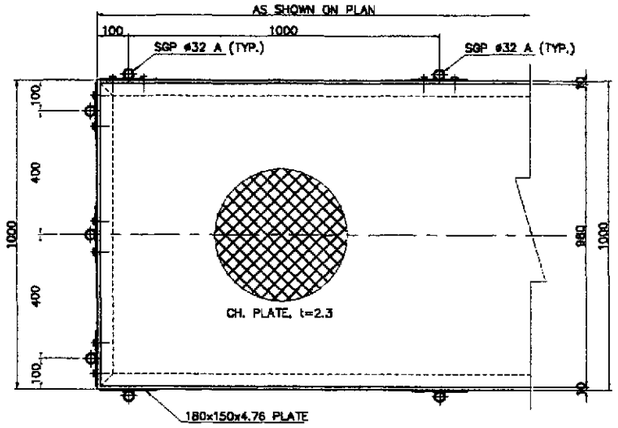

E DETAIL OF FLOOR
SCALE 1:10

SUMMART OF QUANTITIES (PER CATWALK)

MARK	ITEM	SIZE	MATERIAL	NO. (pcs)	UNIT WT. (kg/m)	WEIGHT (kg)	REMARKS
A36	C	100x50x6.35(C4x7.25)	8310	2	10.8	179.496	
A36	C	100X50x6.35(C4x7.25)	1000	18	10.8	194.400	
A36	C	100x50x6.35(C4x7.25)	1200	5	10.8	64.800	
A36	L	50x50x4.76	2300	2	3.64	16.744	SUPPORT
A36	L	50x50x4.76	2278	2	3.64	16.584	SUPPOT
A36	L	50x50x4.76	2067	2	3.64	15.048	LADDER
A36	L	50x50x4.76	2228	4	3.64	32.440	SUPPORT
A36	L	50x50x4.76	2700	2	3.64	19.656	SUPPORT
A36	L	50x50x4.76	50	24	3.64	4.368	BRACKET
A36	CH. PLATE	980x2.3	8310	1	19.34	160.715	DECK
A36	PLATE	150x6	180	24	5.57	24.062	
SGP	PIPE	32A	1300	15	3.7	72.150	POST
SGP	PIPE	20A	3400	2	1.82	12.376	TOP RAIL
SGP	PIPE	20A	4700	2	1.82	17.108	TOP RAIL
SGP	PIPE	20A	3300	4	1.82	24.024	MID RAIL
SGP	PIPE	20A	4600	4	1.82	33.488	MID RAIL
SGP	PIPE	20A	800	6	1.82	8.736	END SIDE RAIL
	R.B.	20A	430	6	1.82	4.696	LADDER
	B.N.	M12x105		130	0.171kg/pc	22.230	
REMOVABLE LADDER	ALUMINUM			1	SET		
					TOTAL WEIGHT =	923.12	
					TOTAL WEIGHT FOR (N=2) =	1,846.24	

JICA
JAPAN INTERNATIONAL COOPERATION AGENCY
KEI KATAHIRA & ENGINEERS INTERNATIONAL
YOO YACHIYO ENGINEERING CO., LTD.

	DATE	SIGNATURE
DESIGNED	9/21/02	M. S. HANO
CHECKED	9/23/02	J.C. SANTOS
SUBMITTED	10/14/02	TEAM LEADER

REPUBLIC OF THE PHILIPPINES
DEPARTMENT OF PUBLIC WORKS AND HIGHWAYS

PJHL – PMO	BUREAU OF DESIGN		OFFICE OF THE SECRETARY	
Submitted By:	Reviewed By:	Recommended By:	Recommended By: (See cover sheet for Signature)	Approved By: (See cover sheet for Signature/Approval)
DANILO C. TRAJANO	ADRIANO M. DOROY	GILBERTO S. REYES	MANUEL M. BONDAN	SIMEON A. DATUMANONG
Project Director	Chief, Bridges Division	Director IV (OIC)	Undersecretary	Secretary

PROJECT AND LOCATION :
THE DETAILED DESIGN STUDY ON UPGRADING INTER-URBAN HIGHWAY SYSTEM ALONG THE PAN-PHILIPPINE HIGHWAY (Plaridel, Cabanatuan and San Jose Bypasses)
PLARIDEL BYPASS - CONTRACT PACKAGE III

SCALE : AS SHOWN
FULL SIZE A1

SHEET CONTENTS :
BRIDGE NO. 8 ANGAT RIVER BRIDGE
GIRDER END CATWALK DETAIL
(PIER 14 & PIER 21)
(INITIAL STAGE)

SHEET NO. : B8M-88

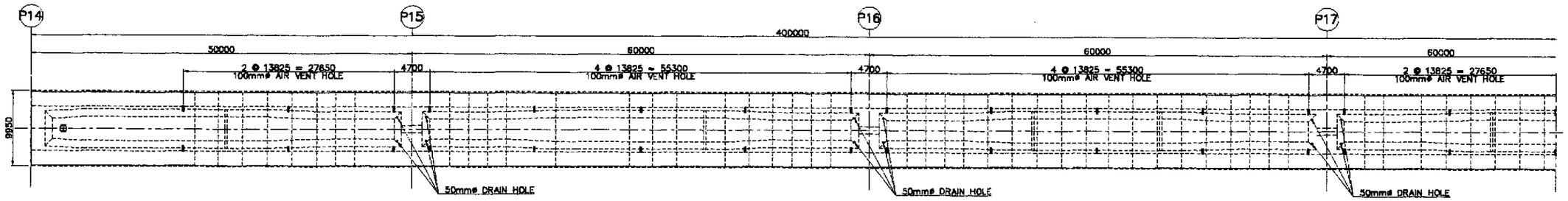

A HALF SHOWING TOP SLAB (SHOWING AIR VENT HOLE LOCATION)
SCALE 1 : 300

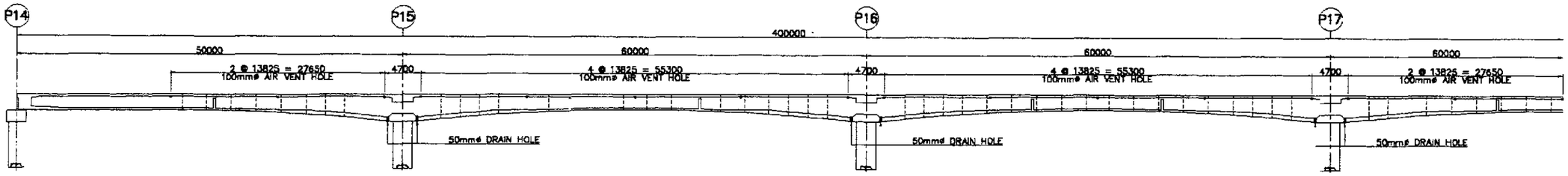

B HALF SHOWING ELEVATION (SHOWING AIR VENT & DRAIN HOLE LOCATION)
SCALE 1 : 300

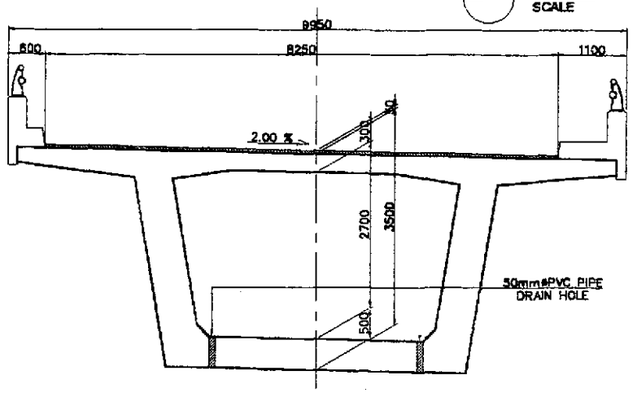

C SECTION @ DRAIN HOLE LOCATION
SCALE 1 : 50

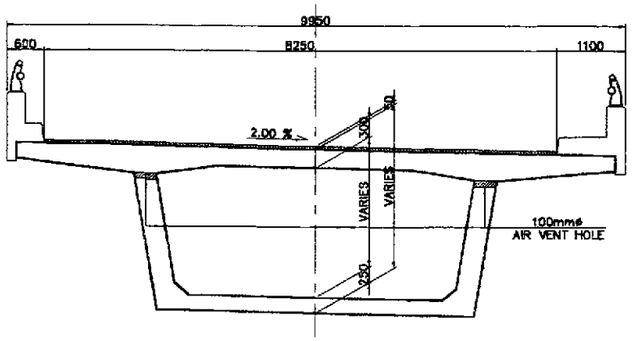

D SECTION @ DRAIN AIR VENTHOLE LOCATION
SCALE 1 : 50

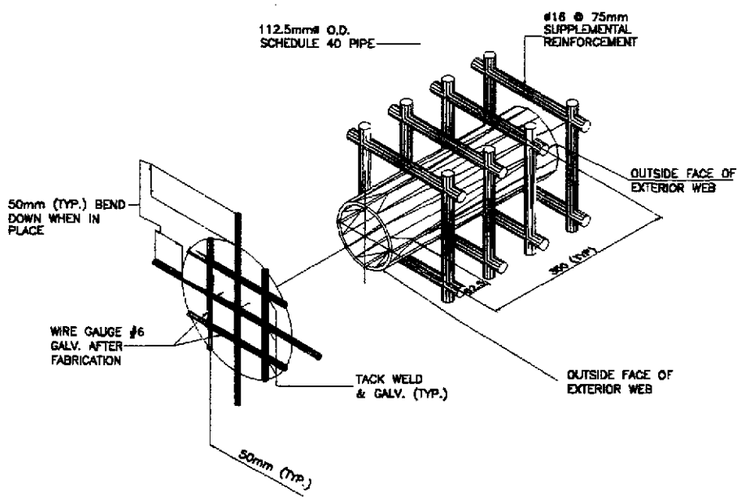

E AIR VENT OPENING ASSEMBLY (TYPICAL)
SCALE AS SHOWN

NOTE :

1. PROVIDE 50mmø PVC PIPE DRAIN HOLES AT LOW POINT OF BOTTOM SLAB.

JICA JAPAN INTERNATIONAL COOPERATION AGENCY KEI KATAHIRA & ENGINEERS INTERNATIONAL YEC YACHIYO ENGINEERING CO., LTD.	DATE / SIGNATURE DESIGNED 9/21/02 M. S. NAVAL CHECKED 9/23/02 J. E. SANTOS SUBMITTED 10/14/02 TEAM LEADER	REPUBLIC OF THE PHILIPPINES DEPARTMENT OF PUBLIC WORKS AND HIGHWAYS FUHL – PMO: Submitted By: DANILO C. TRAJANO, Project Director BUREAU OF DESIGN: Reviewed By: ADRIANO M. DOROY, Chief, Bridges Division; Recommended By: GILBERTO S. REYES, Director IV (OIC) OFFICE OF THE SECRETARY: Recommended By: (See cover sheet for Signature) MANUEL M. BONOAN, Undersecretary; Approved By: (See cover sheet for Signature/Approval) SIMEON A. DATUMANONG, Secretary	PROJECT AND LOCATION : THE DETAILED DESIGN STUDY ON UPGRADING INTER-URBAN HIGHWAY SYSTEM ALONG THE PAN-PHILIPPINE HIGHWAY (Plaridel, Cabanatuan and San Jose Bypasses) PLARIDEL BYPASS - CONTRACT PACKAGE III	SCALE : AS SHOWN FULL SIZE A1	SHEET CONTENTS : BRIDGE NO. 8 ANGAT RIVER BRIDGE AIR VENT HOLE AND DRAIN HOLE DETAILS INITIAL STAGE	SHEET NO. : B8M-89