SUPERSTRUCTURE REINFORCING BARS

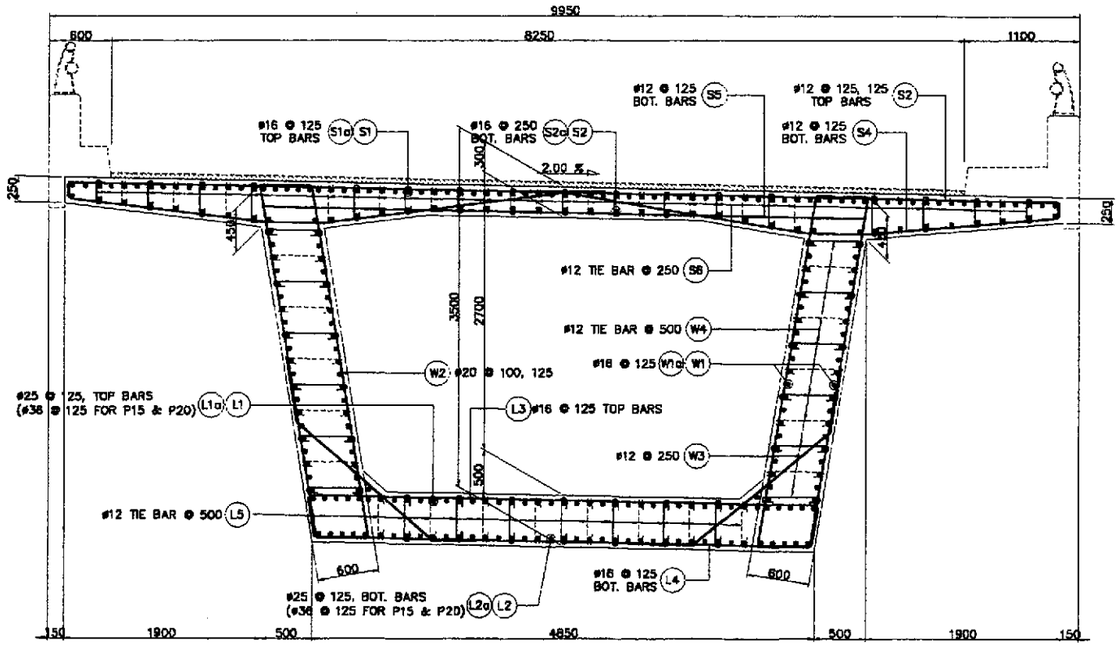

A — TYPICAL SECTION @ SUPPORT
SCALE 1:30

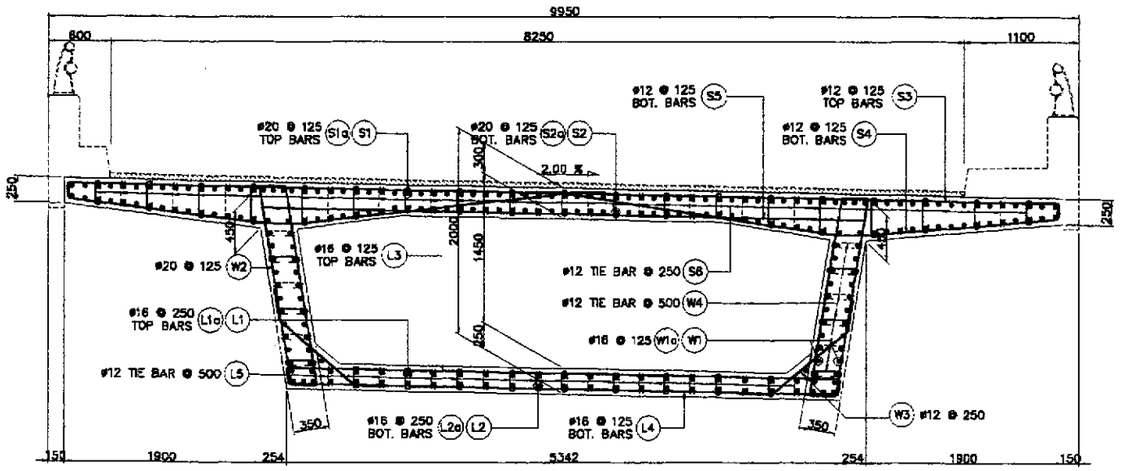

B — TYPICAL SECTION @ MID-SPAN
SCALE 1:30

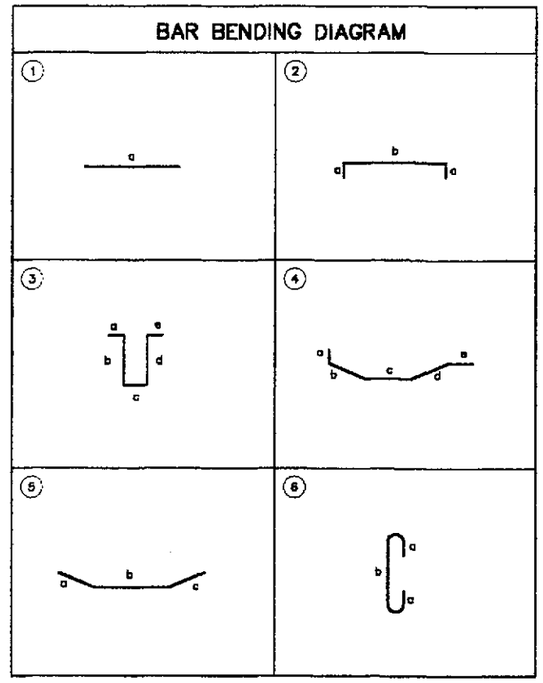

1 — TYPICAL SECTIONS FOR SUPERSTRUCTURE (SHOWING REINFORCEMENT)
SCALE AS SHOWN

JICA
JAPAN INTERNATIONAL COOPERATION AGENCY
KEI KATAHIRA & ENGINEERS INTERNATIONAL
YEC YACHIYO ENGINEERING CO., LTD.

	DATE	SIGNATURE
DESIGNED	9/21/07	M. S. [illegible]
CHECKED	9/23/07	J. G. SANTOS
SUBMITTED	10/14/07	M. [illegible] TEAM LEADER

REPUBLIC OF THE PHILIPPINES
DEPARTMENT OF PUBLIC WORKS AND HIGHWAYS

PUHL – PMO	BUREAU OF DESIGN		OFFICE OF THE SECRETARY	
Submitted By:	Reviewed By:	Recommended By:	Recommended By: (See cover sheet for Signature)	Approved By: (See cover sheet for Signature/Approval)
DANILO C. TRAJANO	ADRIANO M. DOROY	GILBERTO S. REYES	MANUEL M. BONOAN	SIMEON A. DATUMANONG
Project Director	Chief, Bridges Division	Director IV (OIC)	Undersecretary	Secretary

PROJECT AND LOCATION :	SCALE :	SHEET CONTENTS :	SHEET NO. :
THE DETAILED DESIGN STUDY ON UPGRADING INTER-URBAN HIGHWAY SYSTEM ALONG THE PAN-PHILIPPINE HIGHWAY (Plaridel, Cabanatuan and San Jose Bypasses)	AS SHOWN	BRIDGE NO. 8 ANGAT RIVER BRIDGE TYPICAL SUPERSTRUCTURE REINFORCEMENT DETAILS (INITIAL STAGE)	B8M-21
PLARIDEL BYPASS - CONTRACT PACKAGE III	FULL SIZE A1		

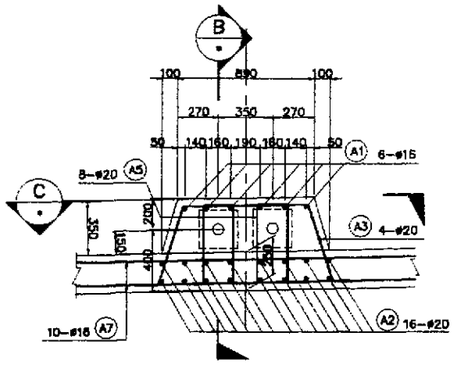

A SECTION
SCALE 1:20

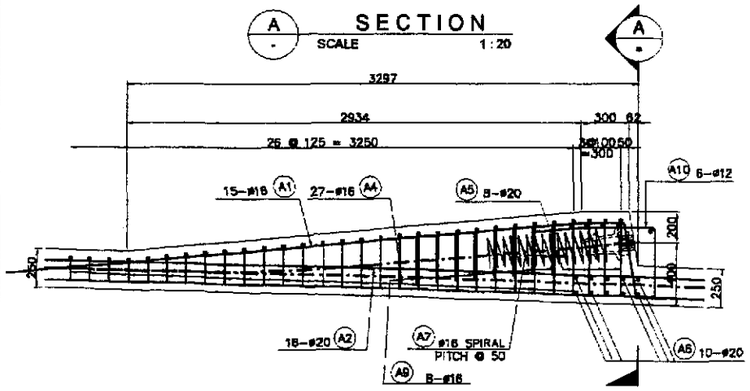

B SECTION
SCALE 1:20

NOTE:
DOWEL BARS SHOULD BE PROVIDED FOR CONCRETE COVER IN ANCHOR HEADS.

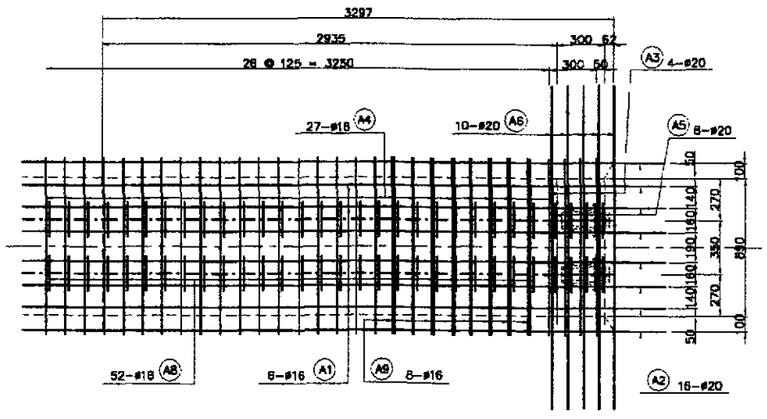

C SECTION
SCALE 1:20

1 DETAIL OF LOCAL ANCHORAGE (TYPE 1)
SCALE AS SHOWN

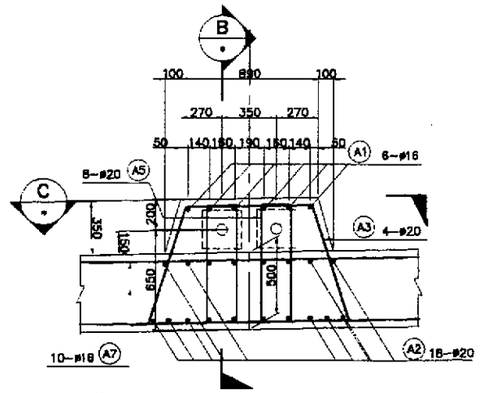

D SECTION
SCALE 1:20

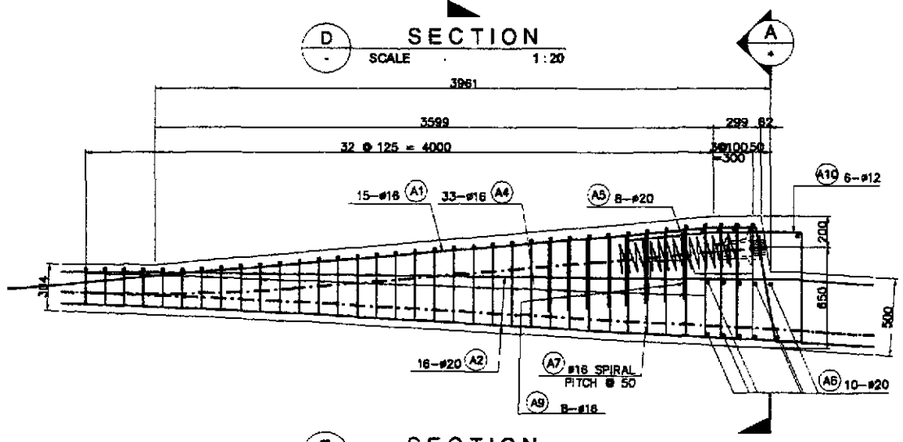

E SECTION
SCALE 1:20

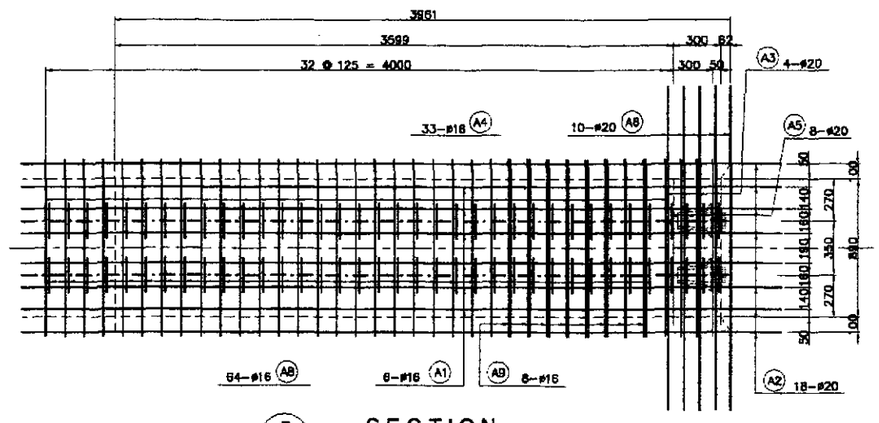

F SECTION
SCALE 1:20

2 DETAIL OF LOCAL ANCHORAGE (TYPE 1A)
SCALE AS SHOWN

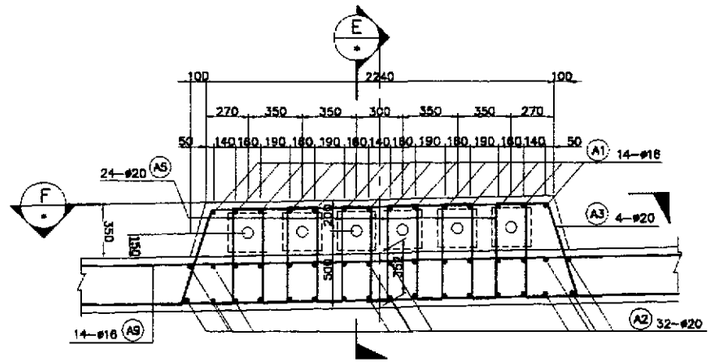

G SECTION
SCALE 1:20

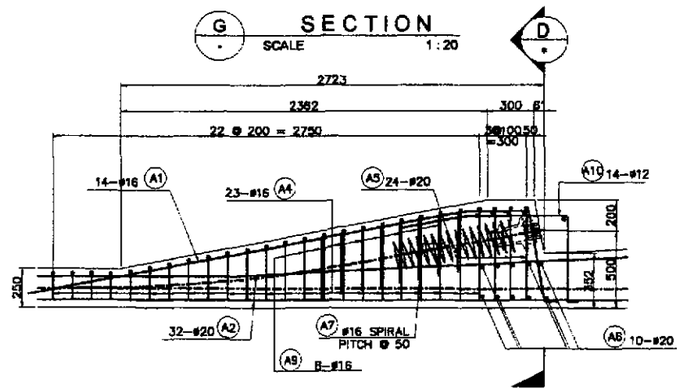

H SECTION
SCALE 1:20

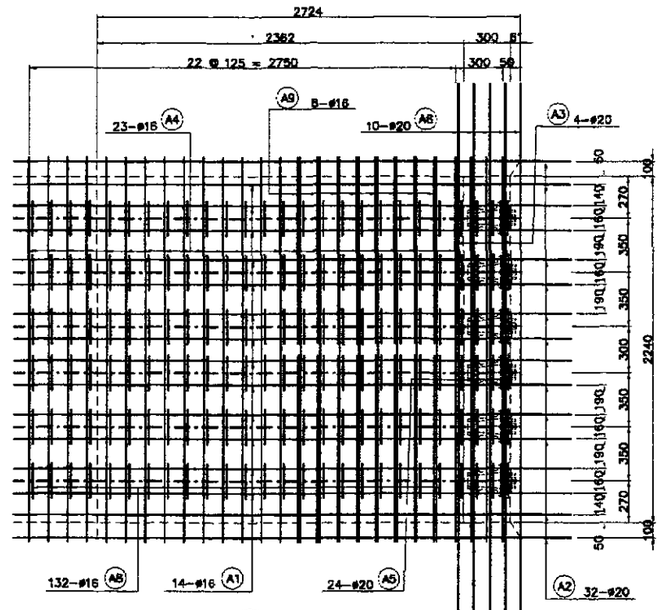

I SECTION
SCALE 1:20

3 DETAIL OF LOCAL ANCHORAGE (TYPE 2)
SCALE AS SHOWN

JICA
JAPAN INTERNATIONAL COOPERATION AGENCY
KEI KATAHIRA & ENGINEERS INTERNATIONAL
YEC YACHIYO ENGINEERING CO., LTD.

	DATE	SIGNATURE
DESIGNED	9/21/02	M. S. RAMAL
CHECKED	9/23/02	J. Z. SANTOS
SUBMITTED	10/14/02	TEAM LEADER

REPUBLIC OF THE PHILIPPINES
DEPARTMENT OF PUBLIC WORKS AND HIGHWAYS

PJHL – PMO	BUREAU OF DESIGN		OFFICE OF THE SECRETARY	
Submitted By:	Reviewed By:	Recommended By:	Recommended By: (See cover sheet for Signature)	Approved By: (See cover sheet for Signature/Approval)
DANILO C. TRAJANO, Project Director	ADRIANO M. DOROY, Chief, Bridges Division	GILBERTO S. REYES, Director IV (OIC)	MANUEL M. BONOAN, Undersecretary	SIMEON A. DATUMANONG, Secretary

PROJECT AND LOCATION :
THE DETAILED DESIGN STUDY ON UPGRADING INTER-URBAN HIGHWAY SYSTEM ALONG THE PAN-PHILIPPINE HIGHWAY (Plaridel, Cabanatuan and San Jose Bypasses)
PLARIDEL BYPASS - CONTRACT PACKAGE III

SCALE : AS SHOWN
FULL SIZE A1

SHEET CONTENTS :
BRIDGE NO. 8 ANGAT RIVER BRIDGE
DETAIL OF LOCAL ANCHORAGES (1 OF 2)
(INITIAL STAGE)

SHEET NO. : B8M-22

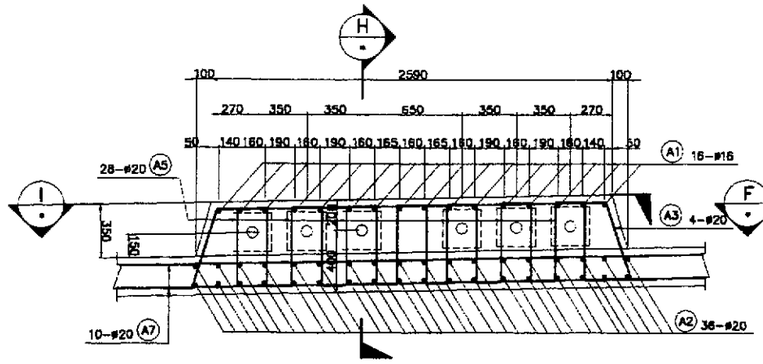

A SECTION
SCALE 1:20

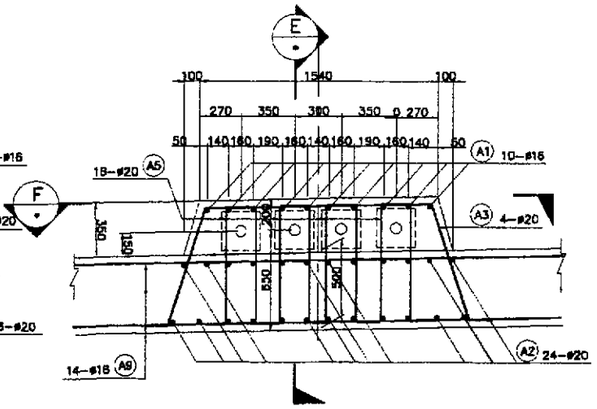

A SECTION
SCALE 1:20

NOTE:
DOWEL BARS SHOULD BE PROVIDED FOR CONCRETE CENTER IN ANCHOR HEADS.

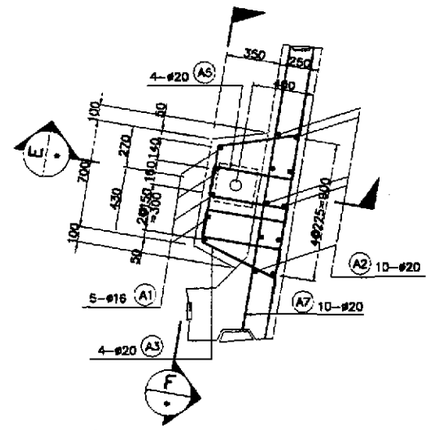

D SECTION
SCALE 1:20

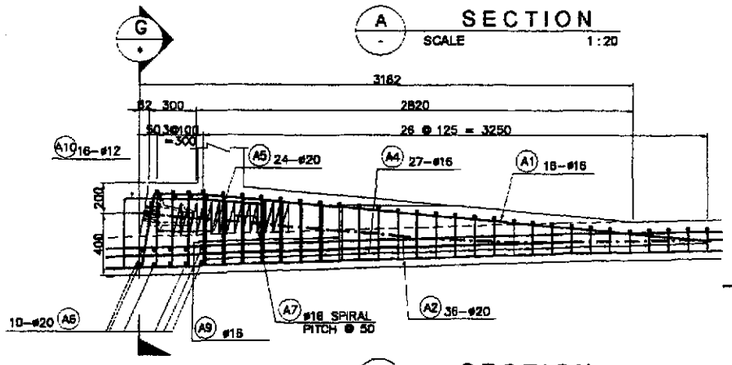

B SECTION
SCALE 1:20

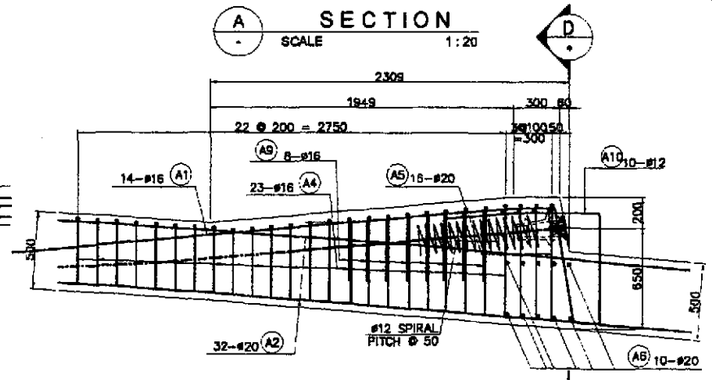

B SECTION
SCALE 1:20

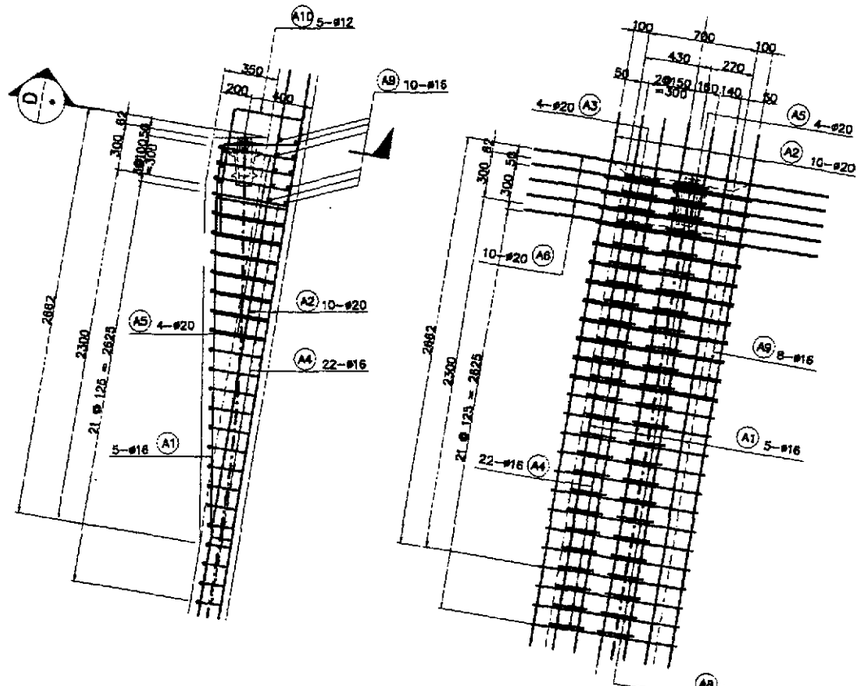

E SECTION
SCALE 1:20

F SECTION
SCALE 1:20

4 DETAIL OF LOCAL ANCHORAGE (TYPE 5)
SCALE AS SHOWN

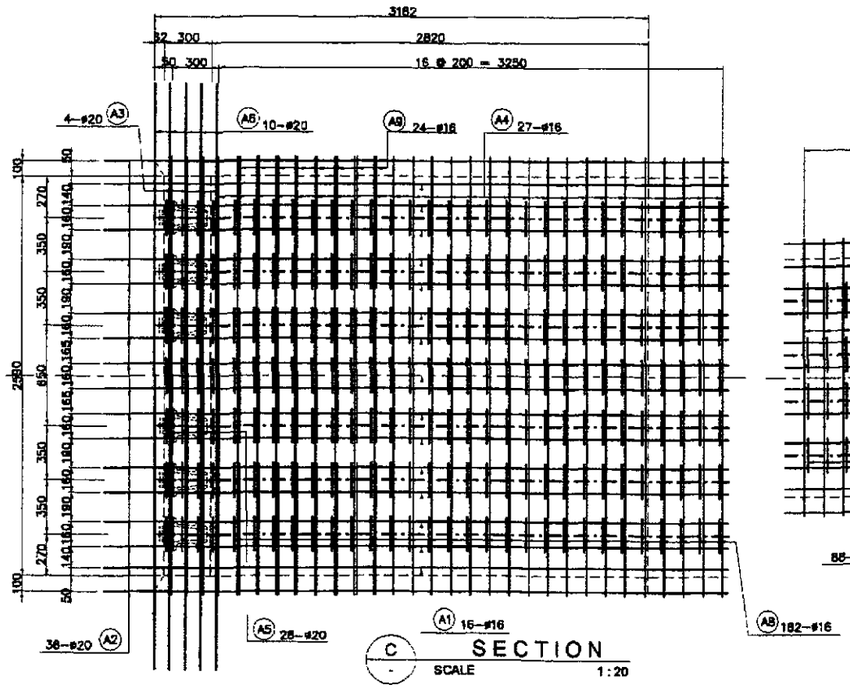

C SECTION
SCALE 1:20

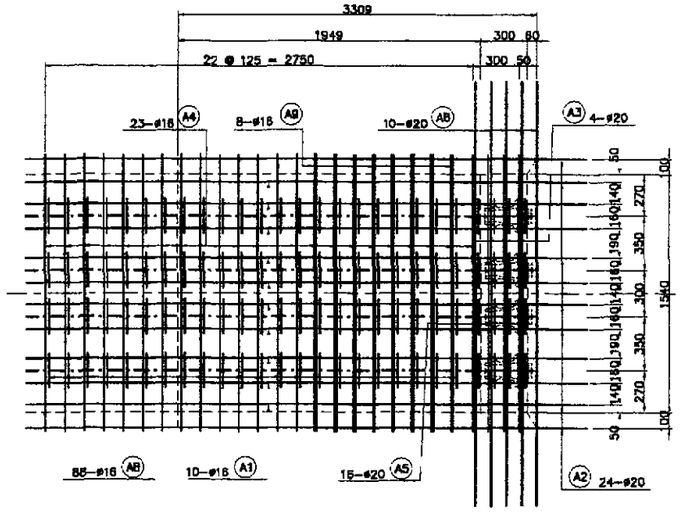

C SECTION
SCALE 1:20

4 DETAIL OF LOCAL ANCHORAGE (TYPE 3)
SCALE AS SHOWN

4 DETAIL OF LOCAL ANCHORAGE (TYPE 4)
SCALE AS SHOWN

JICA
JAPAN INTERNATIONAL COOPERATION AGENCY
KATAHIRA & ENGINEERS INTERNATIONAL
YACHIYO ENGINEERING CO., LTD.

	DATE	SIGNATURE
DESIGNED	9/21/02	
CHECKED	9/23/02	J. C. SANTOS
SUBMITTED	10/14/02	TEAM LEADER

REPUBLIC OF THE PHILIPPINES
DEPARTMENT OF PUBLIC WORKS AND HIGHWAYS

PJHL – PMO	BUREAU OF DESIGN		OFFICE OF THE SECRETARY	
Submitted By:	Reviewed By:	Recommended By:	Recommended By: (See cover sheet for Signature)	Approved By: (See cover sheet for Signature/Approved)
DANILO C. TRAJANO	ADRIANO M. DOROY	GILBERTO S. REYES	MANUEL M. BONGAN	SIMEON A. DATUMANONG
Project Director	Chief, Bridges Division	Director IV (OIC)	Undersecretary	Secretary

PROJECT AND LOCATION :
THE DETAILED DESIGN STUDY ON UPGRADING INTER-URBAN HIGHWAY SYSTEM ALONG THE PAN-PHILIPPINE HIGHWAY (Plaridel, Cabanatuan and San Jose Bypasses)
PLARIDEL BYPASS - CONTRACT PACKAGE III

SCALE : AS SHOWN
FULL SIZE A1

SHEET CONTENTS :
BRIDGE NO. 8 ANGAT RIVER BRIDGE
DETAIL OF LOCAL ANCHORAGES (2 OF 2)
(INITIAL STAGE)

SHEET NO. : B8M-23

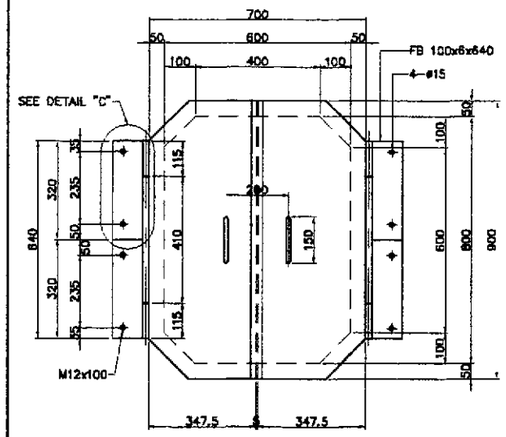

A - PLAN
SCALE 1:20

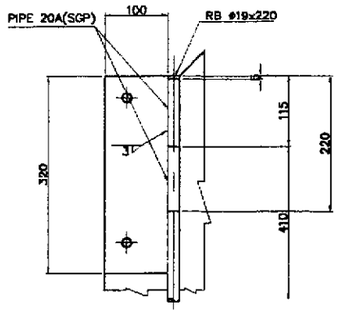

C - DETAIL
SCALE 1:10

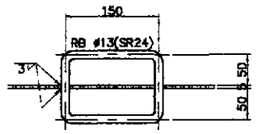

D - HANDLE DETAIL
SCALE 1:10

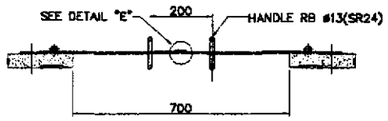

B - SECTION
SCALE 1:20

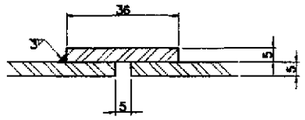

E - DETAIL
SCALE 1:2

2-PL 347.5x4.5x900
4-FB 100x4.5x320
1-FB 38x4.5x900
4-RB ø19x220(SR24)
4-RB ø13x250(SR24)
2-PIPE 20Ax410(SGP)
4-PIPE 20Ax115(SGP)
8-ANCER-M12x100

SCHEDULE OF PC LOCAL ANCHORAGE

TYPE	NO. OF QUANTITIES
1	4
1A	10
2	6
3	10
4	10
5	6

1 - MANHOLE LID DETAILS
SCALE AS SHOWN

BAR BENDING DIAGRAM

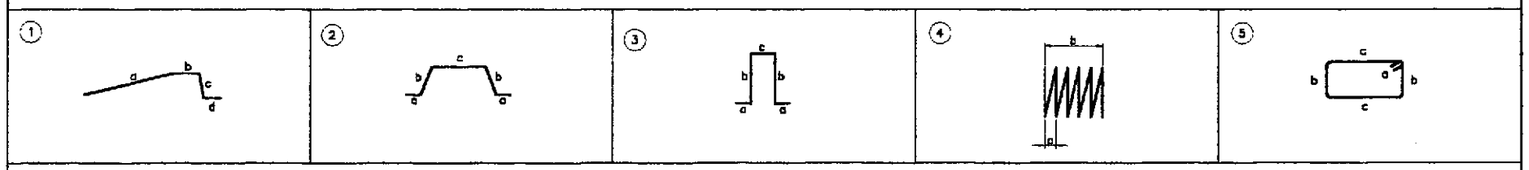

SCHEDULE OF REINFORCEMENT

LOCATION	BAR MARK	SIZE (mm)	BEND TYPE	DIMENSION(mm) OUT TO OUT a	b	c	d	LENGTH (mm)	NO. REQ'D.	UNIT WEIGHT (kg/m)	WEIGHT (kg) GRADE 40	GRADE 60
TYPE 1	A1	20	1	3700	300	500	300	4800	6	2.466		71.02
	A2	20	str	5150				5150	16	2.466		203.20
	A3	20	2	300	520	790		2430	4	2.466		23.97
	A4	16	2	300	520 (max)	790		2060	27	1.579	87.82	
					150 (min)							
	A5	20	3	300	500	220		1820	16	2.466		71.81
	A6	16	str	2100				2100	10	1.579	33.16	
	A7	16	4	50	250			3935	2	1.579	12.43	
	A8	16	3	150	500 (max)	220		1170	52	1.579	96.07	
					150 (min)							
	A9	16	5	100	575 (max)	790		2530	8	1.579	31.96	
	A10	12	1	300	500	500	150	1450	6	0.888	7.73	
	WEIGHT FOR GRADE 60											370.00
	WEIGHT FOR GRADE 40										269.17	
	TOTAL WEIGHT FOR 4 SETS GRADE 60											1479.99
	TOTAL WEIGHT FOR 4 SETS GRADE 40										1076.68	
TYPE 1A	A1	20	1	4800	300	750	300	6150	6	2.466		91.00
	A2	20	str	6200				6200	18	2.466		275.21
	A3	20	2	300	810	790		3010	4	2.466		29.69
	A4	16	2	300	730 (max)	790		2270	33	1.579	118.28	
					150 (min)							
	A5	20	3	300	750	220		2320	16	2.466		91.54
	A6	16	str	2100				2100	4	1.579	13.26	
	A7	16	4	50	250			3935	2	1.579	12.43	
	A8	16	3	150	750 (max)	220		1420	64	1.579	143.50	
					150 (min)							
	A9	16	5	100	575 (max)	790		2530	8	1.579	31.96	
	A10	12	1	300	500	750	150	1700	14	0.888	9.06	
	WEIGHT FOR GRADE 60											487.43
	WEIGHT FOR GRADE 40										328.48	
	TOTAL WEIGHT FOR 10 SETS GRADE 60											4874.30
	TOTAL WEIGHT FOR 10 SETS GRADE 40										3284.90	
TYPE 2	A1	20	1	3000	300	600	300	4200	14	2.466		145.00
	A2	20	str	4200				4200	32	2.466		331.43
	A3	20	2	300	610	2140		3960	4	2.466		39.06
	A4	16	2	300	610 (max)	2140		3500	23	1.579	127.11	
					150 (min)							
	A5	20	3	300	610	220		2040	24	2.466		120.74
	A6	16	str	3500				3500	10	1.579	55.27	
	A7	16	4	50	250			3935	6	1.579	37.28	
	A8	16	3	150	610 (max)	220		1280	132	1.579	266.79	
					150 (min)							
	A9	16	5	100	575 (max)	1200		3350	16	1.579	84.63	
	A10	12	1	300	500	600	150	1550	6	0.888	12.27	
	WEIGHT FOR GRADE 60											636.23
	WEIGHT FOR GRADE 40										583.15	
	TOTAL WEIGHT FOR 4 SETS GRADE 60											2544.91
	TOTAL WEIGHT FOR 4 SETS GRADE 40										2332.60	

LOCATION	BAR MARK	SIZE (mm)	BEND TYPE	DIMENSION(mm) OUT TO OUT a	b	c	d	LENGTH (mm)	NO. REQ'D.	UNIT WEIGHT (kg/m)	WEIGHT (kg) GRADE 40	GRADE 60
TYPE 3	A1	20	1	3250	300	500	300	4350	16	2.466		171.63
	A2	20	str	4800				4800	36	2.466		426.12
	A3	20	2	300	520	2490		4130	4	2.466		40.74
	A4	16	2	300	520 (max)	2490		3760	27	1.579	160.30	
					150 (min)							
	A5	20	3	300	500	220		1820	28	2.466		125.87
	A6	16	3	250	500	220		1720	4	1.579	10.86	
	A7	16	4	50	250			3935	6	1.579	37.28	
	A8	16	3	150	510 (max)	220		1280	182	1.579	367.84	
					150 (min)							
	A9	16	5	100	575 (max)	900		2750	24	1.579	104.21	
	A10	12	1	300	500	500	150	1450	16	0.888	20.60	
	WEIGHT FOR GRADE 60											764.16
	WEIGHT FOR GRADE 40										701.09	
	TOTAL WEIGHT FOR 10 SETS GRADE 60											7641.64
	TOTAL WEIGHT FOR 10 SETS GRADE 40										7010.90	
TYPE 4	A1	20	1	3300	300	750	300	4650	10	2.466		114.67
	A2	20	str	3500				3500	24	2.466		207.14
	A3	20	2	300	800	1440		3640	4	2.466		35.90
	A4	16	2	300	800 (max)	1440		7640	23	1.579	159.43	
					150 (min)							
	A5	20	3	300	750	220		2320	16	2.466		91.54
	A6	16	str	2800				2800	10	1.579	44.21	
	A7	16	4	50	250			3935	4	1.579	24.85	
	A8	16	3	150	750 (max)	220		1420	88	1.579	197.31	
					150 (min)							
	A9	16	5	100	575 (max)	1440		3830	8	1.579	48.38	
	A10	12	1	300	500	750	150	1700	10	0.888	15.10	
	WEIGHT FOR GRADE 60											449.26
	WEIGHT FOR GRADE 40										489.28	
	TOTAL WEIGHT FOR 10 SETS GRADE 60											4492.56
	TOTAL WEIGHT FOR 10 SETS GRADE 40										4892.80	
TYPE 5	A1	20	1	2900	300	500	300	4000	5	2.466		49.32
	A2	20	str	4000				4000	10	2.466		98.64
	A3	20	2	300	520	600		2240	4	2.466		22.10
	A4	16	2	300	520 (max)	600		1870	22	1.579	64.96	
					150 (min)							
	A5	20	3	250	500	220		1720	4	2.466		16.97
	A6	16	str	1900				1900	10	1.579	30.00	
	A7	16	4	50	250			3935	4	1.579	24.85	
	A8	16	3	150	500 (max)	220		1170	42	1.579	77.59	
					150 (min)							
	A9	16	5	100	575 (max)	600		2150	8	1.579	27.16	
	A10	12	1	300	500	500	150	1450	5	0.888	6.44	
	WEIGHT FOR GRADE 60											187.02
	WEIGHT FOR GRADE 40										231.00	
	TOTAL WEIGHT FOR 6 SETS GRADE 60											1122.13
	TOTAL WEIGHT FOR 6 SETS GRADE 40										1386.00	

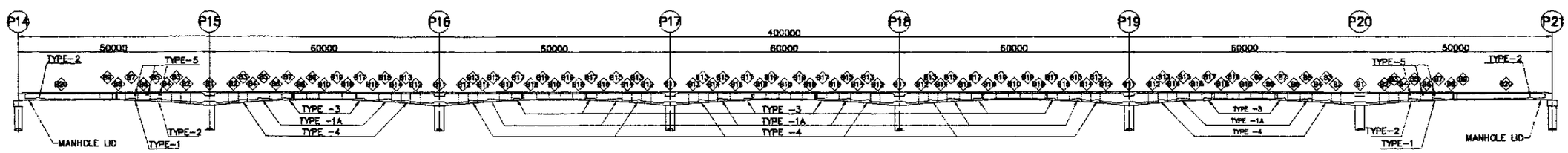

2 - LOCAL ANCHORAGE LOCATIONS AND MANHOLE LIDS DETAILS
SCALE 1:1200

JICA
JAPAN INTERNATIONAL COOPERATION AGENCY
KEI KATAHIRA & ENGINEERS INTERNATIONAL
YEO YACHIYO ENGINEERING CO., LTD.

	DATE	SIGNATURE
DESIGNED	9/21/02	M. S. NAVAL
CHECKED	9/23/02	J. E. SANTOS
SUBMITTED	10/14/02	TEAM LEADER

REPUBLIC OF THE PHILIPPINES
DEPARTMENT OF PUBLIC WORKS AND HIGHWAYS

FUHL - PMO	BUREAU OF DESIGN		OFFICE OF THE SECRETARY	
Submitted By:	Reviewed By:	Recommended By:	Recommended By: (See cover sheet for Signature)	Approved By: (See cover sheet for Signature/Approval)
DANILO C. TRAJANO	ADRIANO M. DOROY	GILBERTO S. REYES	MANUEL M. BONDAN	SIMEON A. DATUMANONG
Project Director	Chief, Bridges Division	Director IV (OIC)	Undersecretary	Secretary

PROJECT AND LOCATION :
THE DETAILED DESIGN STUDY ON UPGRADING INTER-URBAN HIGHWAY SYSTEM ALONG THE PAN-PHILIPPINE HIGHWAY (Plaridel, Cabanatuan and San Jose Bypasses)
PLARIDEL BYPASS - CONTRACT PACKAGE III

SCALE : AS SHOWN
FULL SIZE A1

SHEET CONTENTS :
BRIDGE NO. 8 ANGAT RIVER BRIDGE
LOCAL ANCHORAGE LOCATIONS & MANHOLE LIDS DETAILS
(INITIAL STAGE)

SHEET NO. : B8M-24

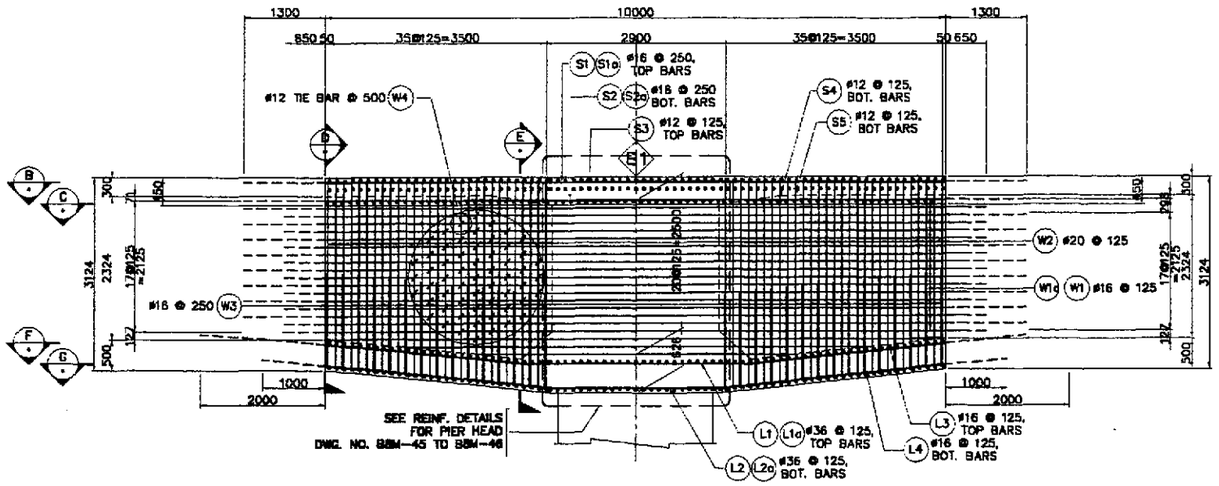

A SECTION
SCALE 1:100

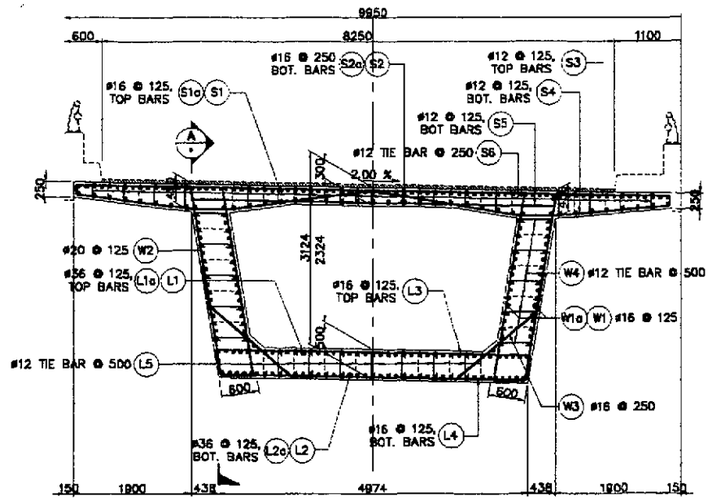

D SECTION
SCALE 1:100

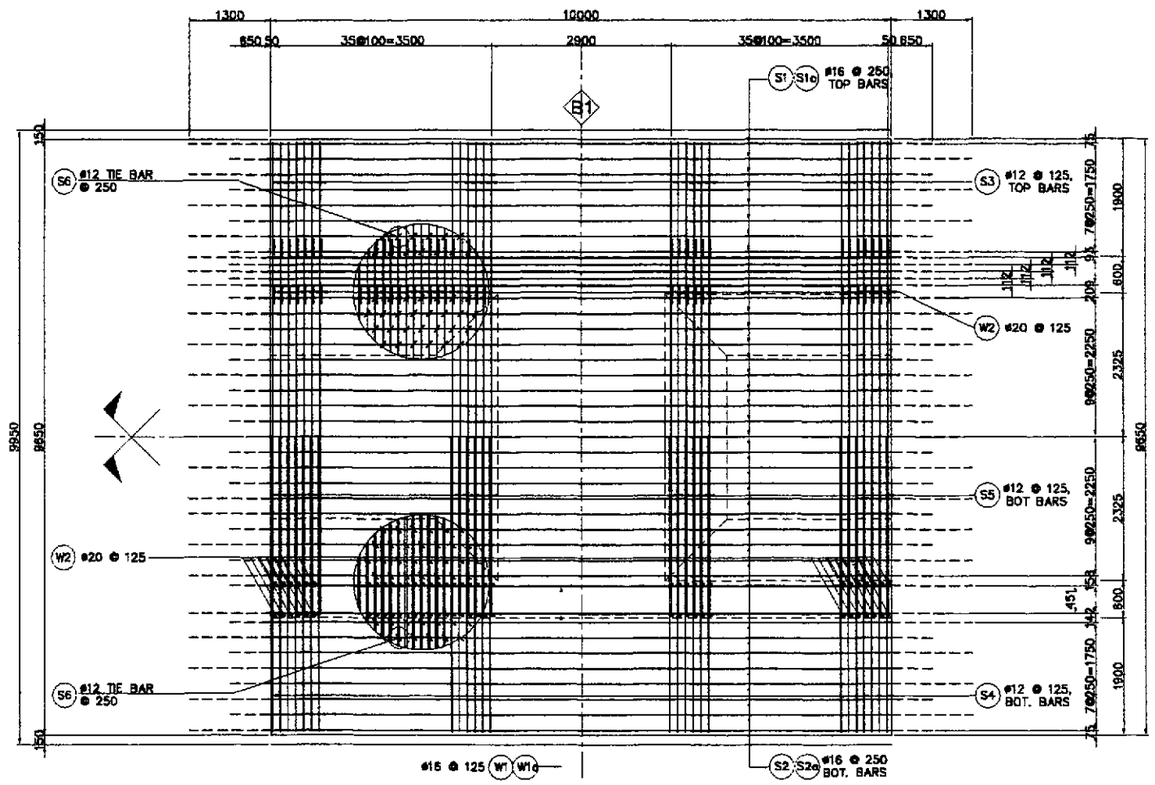

B SECTION
SCALE 1:100

C SECTION
SCALE 1:100

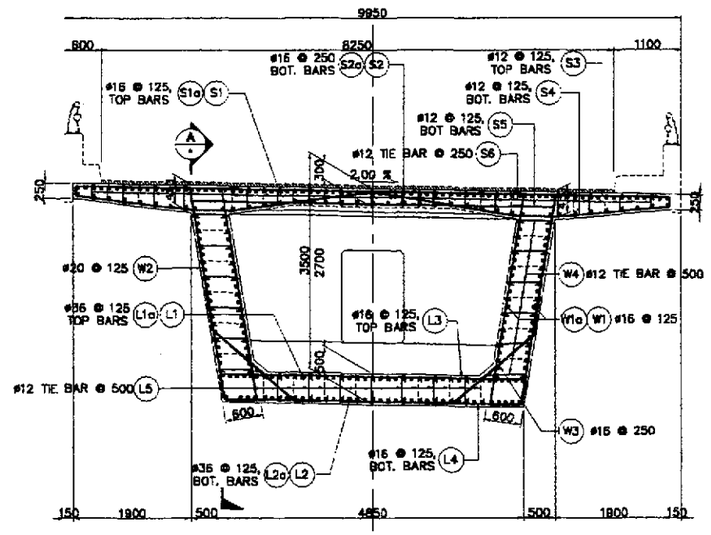

E SECTION
SCALE 1:100

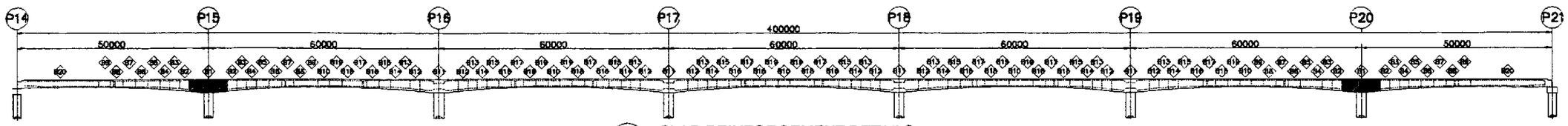

1 SLAB REINFORCEMENT DETAILS
SCALE AS SHOWN

JICA JAPAN INTERNATIONAL COOPERATION AGENCY KEI KATAHIRA & ENGINEERS INTERNATIONAL YEC YACHIYO ENGINEERING CO., LTD.	DATE	SIGNATURE	REPUBLIC OF THE PHILIPPINES DEPARTMENT OF PUBLIC WORKS AND HIGHWAYS				PROJECT AND LOCATION :	SCALE :	SHEET CONTENTS :	SHEET NO. :
	DESIGNED 9/21/02		PJHL – PMO	BUREAU OF DESIGN		OFFICE OF THE SECRETARY	THE DETAILED DESIGN STUDY ON UPGRADING INTER-URBAN HIGHWAY SYSTEM ALONG THE PAN-PHILIPPINE HIGHWAY (Plaridel, Cabanatuan and San Jose Bypasses)	AS SHOWN	BRIDGE NO. 8 ANGAT RIVER BRIDGE REINFORCEMENT DETAILS AT PIER TABLE-B1 (1 OF 2) (INITIAL STAGE)	B8M-25
	CHECKED 9/23/02	J.C. SANTOS TEAM LEADER	Submitted By: DANILO C. TRAJANO, Project Director	Reviewed By: ADRIANO M. DOROY, Chief, Bridges Division	Recommended By: GILBERTO S. REYES, Director IV (OIC)	Recommended By: (See cover sheet for Signature) MANUEL M. BONDAN, Undersecretary	PLARIDEL BYPASS - CONTRACT PACKAGE III	FULL SIZE A1		
	SUBMITTED 10/14/02	H. KUCH TEAM LEADER				Approved By: (See cover sheet for Signature/Approval) SINEON A. DATUMANONG, Secretary				

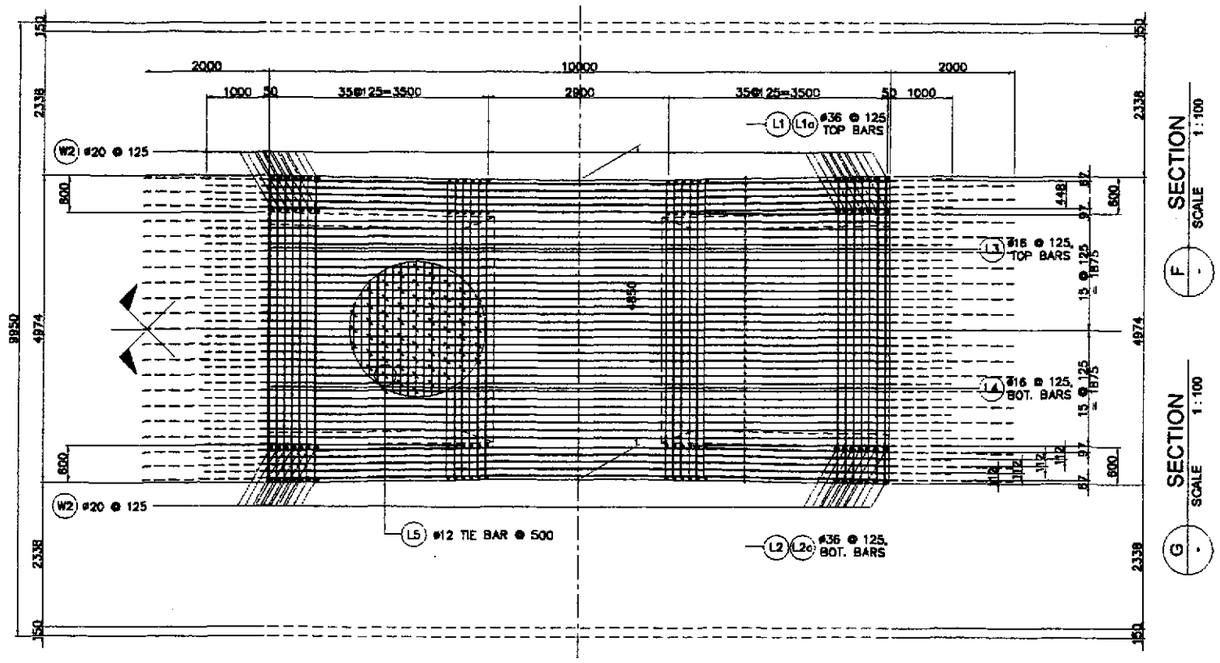

BAR BENDING DIAGRAM

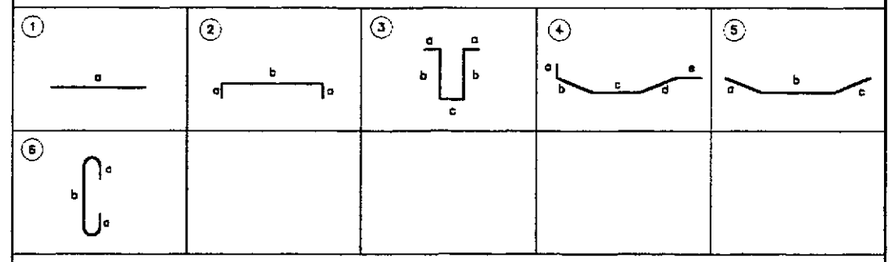

SCHEDULE OF REINFORCEMENT

LOCATION	BAR MARK	SIZE (mm)	BEND TYPE	DIMENSION(mm) OUT TO OUT a	b	c	d	e	f	LENGTH (mm)	NO. REQ'D.	UNIT WEIGHT (kg/m)	WEIGHT (Kg) GRADE 60	GRADE 40
B1	S1	16	str	12600						12600	40	1.579		795.82
	S1a	16	str	11300						11300	39	1.579		695.87
	S2	16	str	12600						12600	20	1.579		397.81
	S2a	16	str	11300						11300	19	1.579		339.01
	S3	12	2	9550	125					9800	72	0.818		577.18
	S4	12	5	150	1875	595	2050	150		4820	144	0.818		567.76
	S5	12	str	5835						5835	72	0.818		343.66
	S6	12	6	125	390 (max)					541	1368	0.818		605.39
					192 (min)									
	L1	36	5	5170	3730	5170				14070	21	7.991	2351.10	
	L1a	36	5	4170	3730	4170				12070	20	7.991	1929.03	
	L2	36	5	5670	2780	5670				14120	21	7.991	2369.49	
	L2a	36	5	4670	2780	4670				12120	20	7.991	1937.02	
	L3	16	2	400	4900					5700	72	1.579		648.02
	L4	16	2	400	4760					5560	72	1.579		632.11
	L5	12	6	250	500					1000	504	0.818		412.27
	W1	16	str	12600						12600	36	1.579		716.23
	W1a	16	str	11300						11300	36	1.579		642.34
	W2	20	3	300	3400 (max)	500				7525	180	2.466	3340.20	
					3025 (min)									
	W3	12	5	250	1740	250				2240	36	0.818		65.98
	W4	12	6	250	400					900	720	0.818		530.06
										WEIGHT FOR GRADE 60 =			11936.80	
										WEIGHT FOR GRADE 40 =				7969.60
										TOTAL WEIGHT FOR 2 PIERS :				
										WEIGHT FOR GRADE 60 =			23873.67	
										WEIGHT FOR GRADE 40 =				15939.17

THE REINFORCEMENT SHOWN ON THIS TABLE IS FOR REFERENCE ONLY. THE CONTRACTOR SHOULD CHECK AND VERIFY ALL DIMENSIONS, SIZES AND QUANTITIES OF REINFORCEMENT.

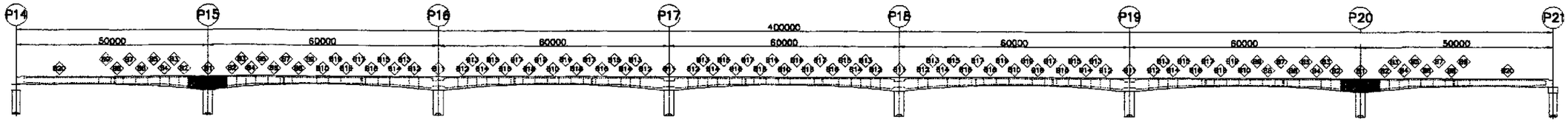

1 SLAB REINFORCEMENT DETAILS
SCALE AS SHOWN

JICA
JAPAN INTERNATIONAL COOPERATION AGENCY
KATAHIRA & ENGINEERS INTERNATIONAL
YACHIYO ENGINEERING CO., LTD.

	DATE	SIGNATURE
DESIGNED	9/21/02	M. G. [illegible]
CHECKED	9/23/02	J. E. [illegible]
SUBMITTED	10/14/02	[illegible] TEAM LEADER

REPUBLIC OF THE PHILIPPINES
DEPARTMENT OF PUBLIC WORKS AND HIGHWAYS

PUHL – PMO	BUREAU OF DESIGN		OFFICE OF THE SECRETARY	
Submitted By:	Reviewed By:	Recommended By:	Recommended By: (See cover sheet for Signature)	Approved By: (See cover sheet for Signature/Approval)
DANILO C. TRAJANO	ADRIANO M. DOROY	GILBERTO S. REYES	MANUEL M. BONOAN	SIMEON A. DATUMANONG
Project Director	Chief, Bridges Division	Director IV (OIC)	Undersecretary	Secretary

PROJECT AND LOCATION :	SCALE :	SHEET CONTENTS :	SHEET NO. :
THE DETAILED DESIGN STUDY ON UPGRADING INTER-URBAN HIGHWAY SYSTEM ALONG THE PAN-PHILIPPINE HIGHWAY (Plaridel, Cabanatuan and San Jose Bypasses)	AS SHOWN	BRIDGE NO. 8 AMGAT RIVER BRIDGE REINFORCEMENT DETAILS AT PIER TABLE -B1 (2 OF 2) (INITIAL STAGE)	B8M-26
PLARIDEL BYPASS - CONTRACT PACKAGE III	FULL SIZE A1		

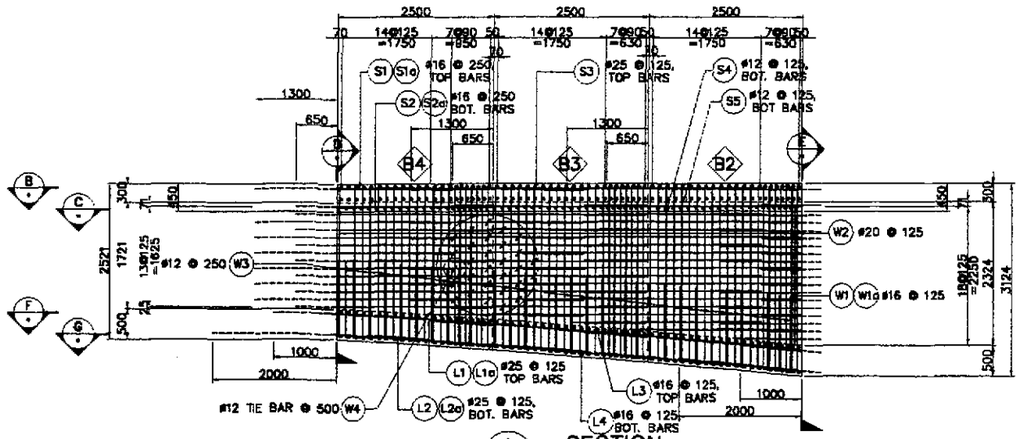

A SECTION
SCALE 1:100

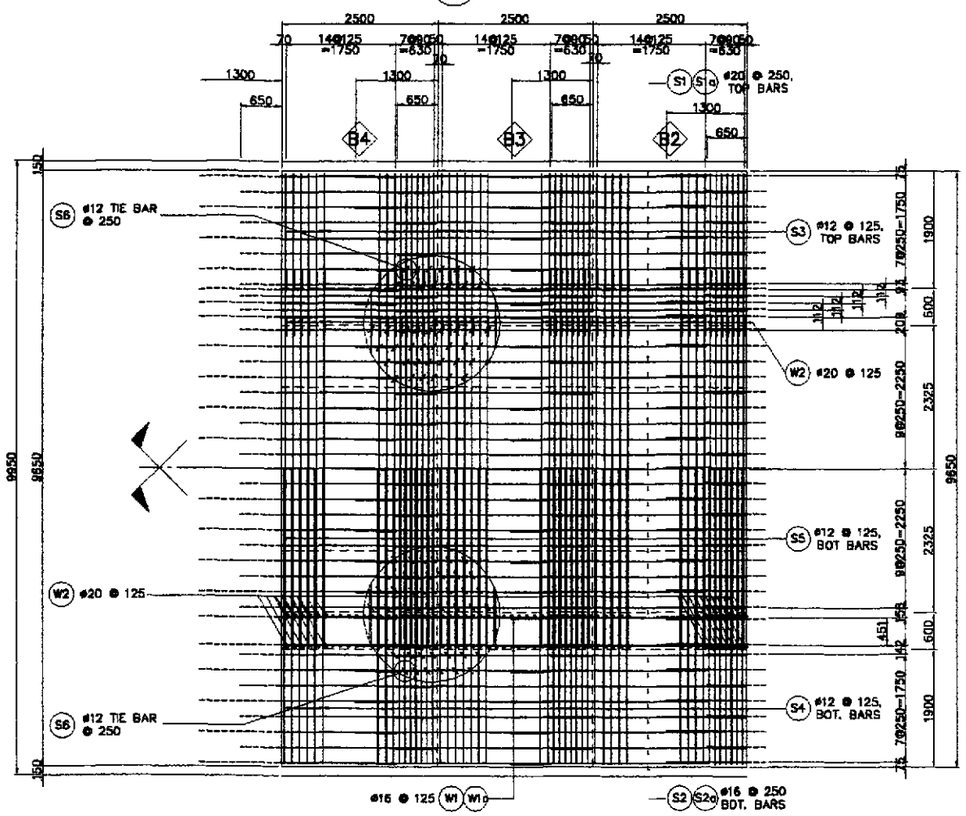

B SECTION
SCALE 1:100

C SECTION
SCALE 1:100

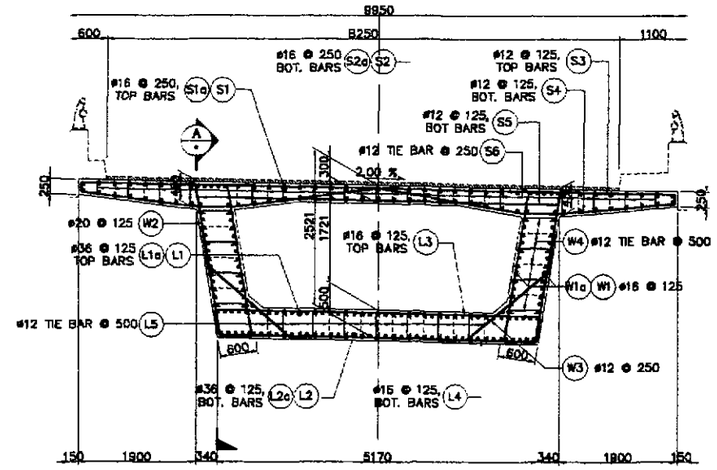

D SECTION
SCALE 1:100

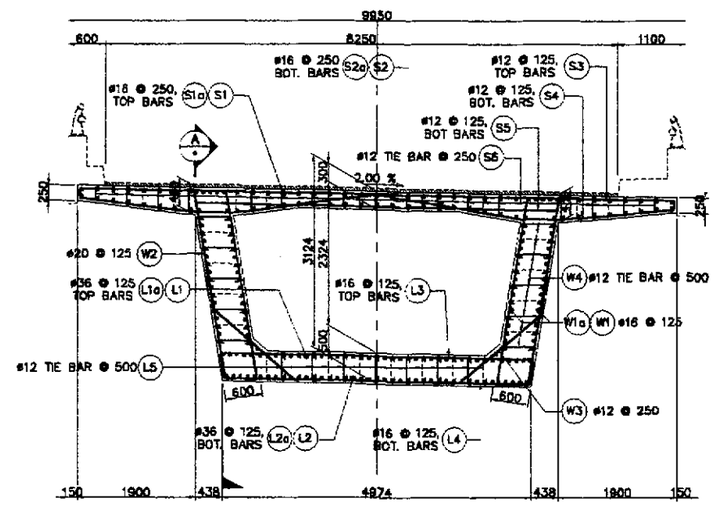

E SECTION
SCALE 1:100

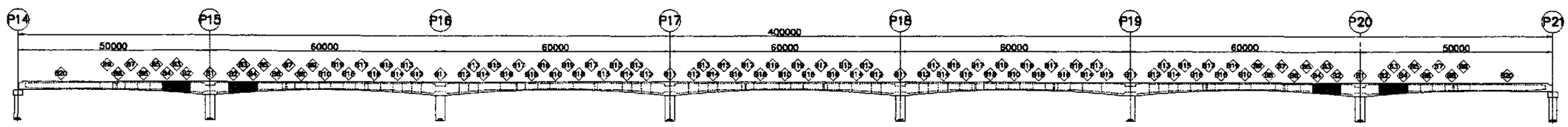

1 SLAB REINFORCEMENT DETAILS
SCALE AS SHOWN

JICA
JAPAN INTERNATIONAL COOPERATION AGENCY
KEI KATAHIRA & ENGINEERS INTERNATIONAL
YEC YACHIYO ENGINEERING CO., LTD.

	DATE	SIGNATURE
DESIGNED	9/21/02	J. S. NAVA
CHECKED	9/25/02	J. SANTOS
SUBMITTED	10/14/02	TEAM LEADER

REPUBLIC OF THE PHILIPPINES
DEPARTMENT OF PUBLIC WORKS AND HIGHWAYS

P.H.L. – PMO	BUREAU OF DESIGN		OFFICE OF THE SECRETARY	
Submitted By:	Reviewed By:	Recommended By:	Recommended By: (See cover sheet for Signature)	Approved By: (See cover sheet for Signature/Approval)
DANILO C. TRAJANO	ADRIANO M. DOROY	GILBERTO S. REYES	MANUEL M. BONGAN	SIMEON A. DATUMANONG
Project Director	Chief, Bridges Division	Director IV (OIC)	Undersecretary	Secretary

PROJECT AND LOCATION :
THE DETAILED DESIGN STUDY ON UPGRADING INTER-URBAN HIGHWAY SYSTEM ALONG THE PAN-PHILIPPINE HIGHWAY (Plaridel, Cabanatuan and San Jose Bypasses)
PLARIDEL BYPASS - CONTRACT PACKAGE III

SCALE : AS SHOWN
FULL SIZE A1

SHEET CONTENTS :
BRIDGE NO. 8 ANGAT RIVER BRIDGE
REINFORCEMENT DETAILS FOR SEGMENT-B2 TO B4 (1 OF 2)
(INITIAL STAGE)

SHEET NO. : B8M-27

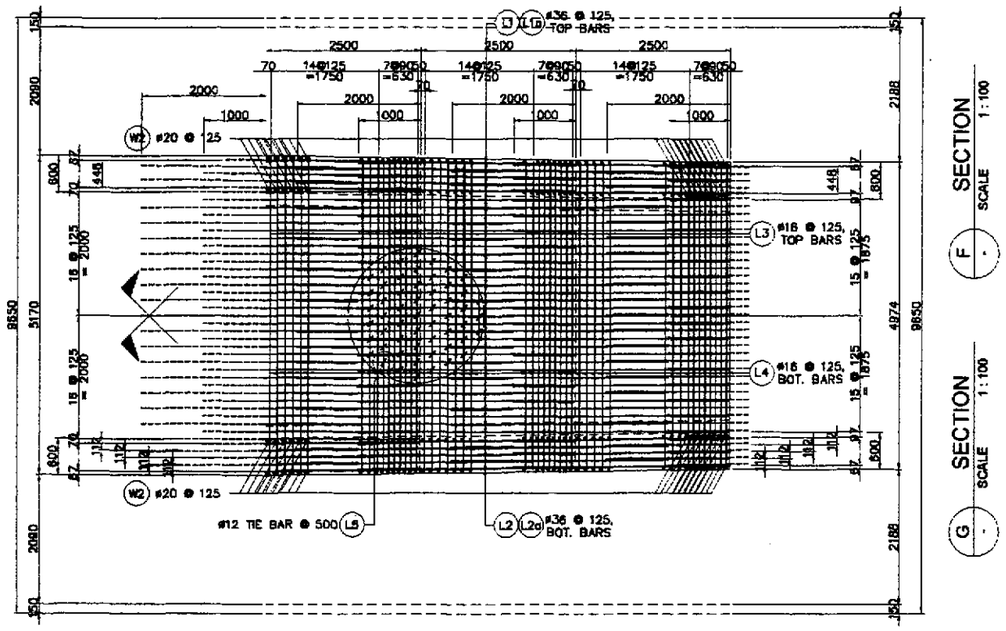

BAR BENDING DIAGRAM

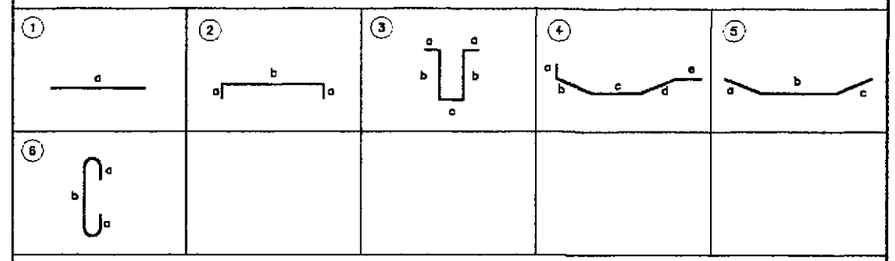

SCHEDULE OF REINFORCEMENT

LOCATION	BAR MARK	SIZE (mm)	BEND TYPE	DIMENSION(mm) OUT TO OUT a	b	c	d	e	f	LENGTH (mm)	NO. REQ'D.	UNIT WEIGHT (kg/m)	WEIGHT (Kg) GRADE 60	GRADE 40
B2 TO B4	S1	16	str	3800						3800	138	1.579		828.03
	S1a	16	str	3150						3150	132	1.579		656.55
	S2	16	str	3800						3800	138	1.579		828.03
	S2a	16	str	3150						3150	132	1.579		656.55
	S3	12	2	9550	125					9800	132	0.818		1058.16
	S4	12	5	150	1875	595	2050	150		4820	264	0.818		1040.89
	S5	12	str	5835						5835	132	0.818		630.04
	S6	12	6	125	380 (max)					541	2508	0.818		1109.89
					182 (min)									
	L1	36	str	3500						3500	126	7.991	3524.03	
	L1a	36	str	3500						3500	120	7.991	3356.22	
	L2	36	str	3500						3500	126	7.991	3524.03	
	L2a	36	str	3500						3500	120	7.991	3356.22	
	L3	16	2	400	5285 (max)					5960	132	1.579		1242.23
					5035 (min)									
	L4	16	2	400	5070 (max)					5773	132	1.579		1203.15
					4875 (min)									
	L5	12	6	250	500					1000	1188	0.818		971.78
	W1	16	str	3800						3800	168	1.579		1008.03
	W1a	16	str	3150						3150	188	1.579		835.51
	W1b	16	str	3250 (max)						3375	96	1.579		511.60
				1500 (min)										
	W2	20	3	300	3025 (max)	500				6550	264	2.466	4264.21	
					2425 (min)									
	W3	12	5	250	1740	250				2240	132	0.818		241.87
	W4	12	6	250	400					900	1320	0.818		971.78

WEIGHT FOR GRADE 60 = 18024.71
WEIGHT FOR GRADE 40 = 13794.18
TOTAL WEIGHT FOR 2 PIERS :
TOTAL WEIGHT FOR GRADE 60 = 36048.42
TOTAL WEIGHT FOR GRADE 40 = 27588.36

THE REINFORCEMENT SHOWN ON THIS TABLE IS FOR REFERENCE ONLY. THE CONTRACTOR SHOULD CHECK AND VERIFY ALL DIMENSIONS, SIZES AND QUANTITIES OF REINFORCEMENT.

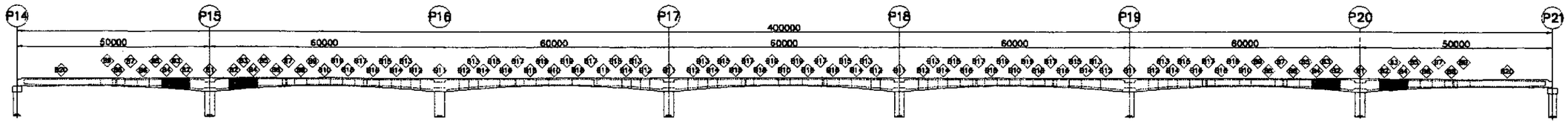

1 SLAB REINFORCEMENT DETAILS
SCALE AS SHOWN

JICA
JAPAN INTERNATIONAL COOPERATION AGENCY
KEI KATAHIRA & ENGINEERS INTERNATIONAL
YEC YACHIYO ENGINEERING CO., LTD.

	DATE	SIGNATURE
DESIGNED	9/21/02	M. S. MARIBA
CHECKED	9/23/02	J. E. SANTOS
SUBMITTED	10/14/02	TEAM LEADER

REPUBLIC OF THE PHILIPPINES
DEPARTMENT OF PUBLIC WORKS AND HIGHWAYS

PJHL – PMO	BUREAU OF DESIGN		OFFICE OF THE SECRETARY	
Submitted By:	Reviewed By:	Recommended By:	Recommended By: (See cover sheet for Signature)	Approved By: (See cover sheet for Signature/Approval)
DANILO C. TRAJANO	ADRIANO M. DOROY	GILBERTO S. REYES	MANUEL M. BONOAN	SIMEON A. DATUMANONG
Project Director	Chief, Bridges Division	Director IV (OIC)	Undersecretary	Secretary

PROJECT AND LOCATION :
THE DETAILED DESIGN STUDY ON UPGRADING INTER-URBAN HIGHWAY SYSTEM ALONG THE PAN-PHILIPPINE HIGHWAY (Plaridel, Cabanatuan and San Jose Bypasses)
PLARIDEL BYPASS - CONTRACT PACKAGE III

SCALE : AS SHOWN
FULL SIZE A1

SHEET CONTENTS :
BRIDGE NO. 8 ANGAT RIVER BRIDGE
REINFORCEMENT DETAILS FOR SEGMENT-B2 TO B4 (2 OF 2)
(INITIAL STAGE)

SHEET NO. : B8M-28

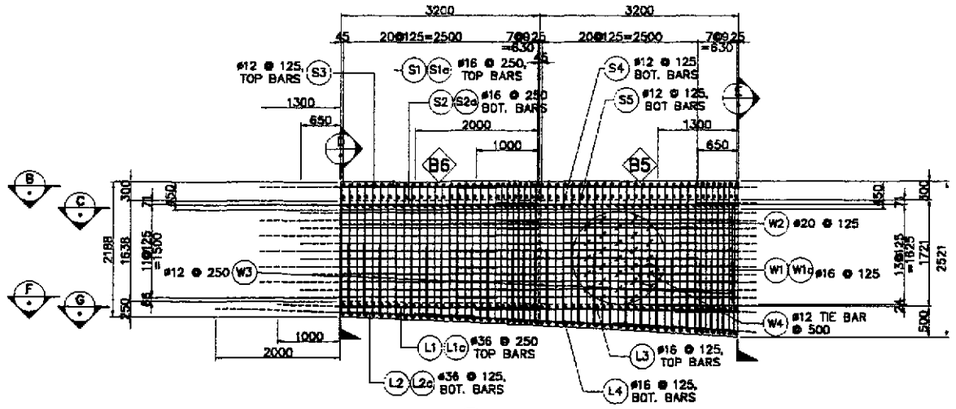

A SECTION
SCALE 1 : 100

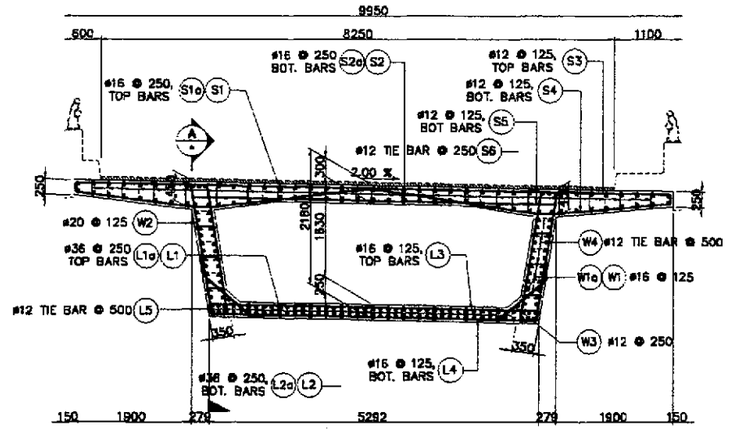

D SECTION
SCALE 1 : 100

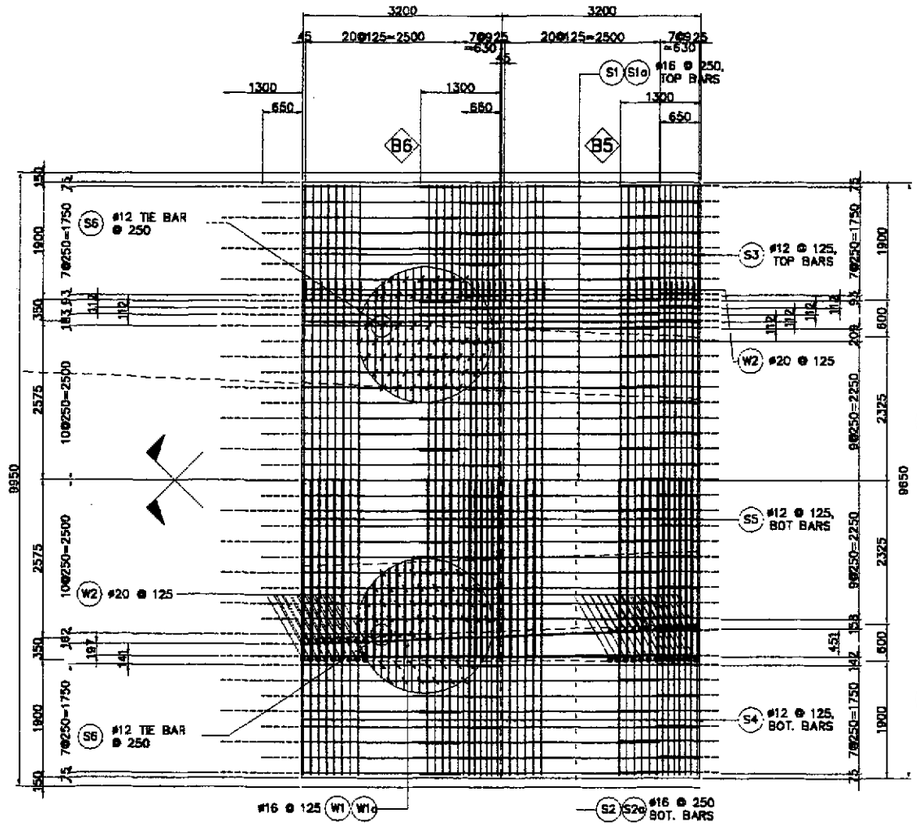

B SECTION
SCALE 1 : 100

C SECTION
SCALE 1 : 100

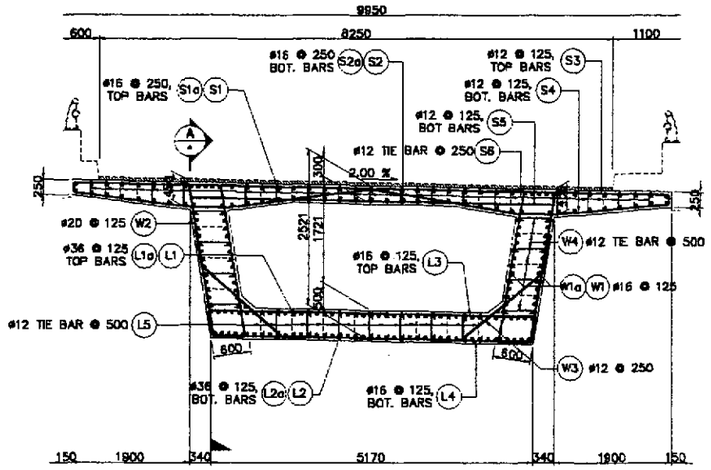

E SECTION
SCALE 1 : 100

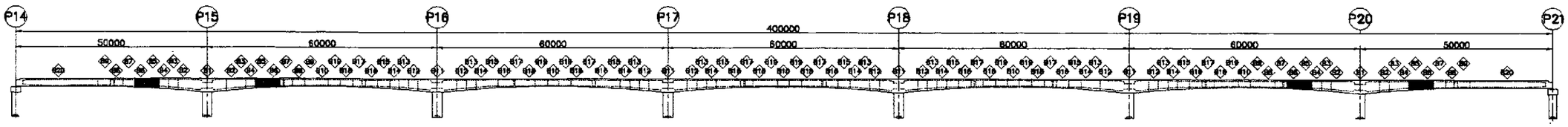

1 SLAB REINFORCEMENT DETAILS
SCALE AS SHOWN

JICA JAPAN INTERNATIONAL COOPERATION AGENCY KEI KATAHIRA & ENGINEERS INTERNATIONAL YEC YACHIYO ENGINEERING CO., LTD.	DATE / SIGNATURE	REPUBLIC OF THE PHILIPPINES DEPARTMENT OF PUBLIC WORKS AND HIGHWAYS				PROJECT AND LOCATION :	SCALE :	SHEET CONTENTS :	SHEET NO. :
	DESIGNED 9/6/02	PJHL - PMO	BUREAU OF DESIGN		OFFICE OF THE SECRETARY	THE DETAILED DESIGN STUDY ON UPGRADING INTER-URBAN HIGHWAY SYSTEM ALONG THE PAN-PHILIPPINE HIGHWAY (Plaridel, Cabanatuan and San Jose Bypasses)	AS SHOWN	BRIDGE NO. 8 ANGAT RIVER BRIDGE REINFORCEMENT DETAILS FOR SEGMENT-B5 TO B6 (1 OF 2) (INITIAL STAGE)	B8M-29
	CHECKED 9/23/02	Submitted By:	Reviewed By:	Recommended By:	Recommended By: (See cover sheet for Signature) / Approved By: (See cover sheet for Signature/Approval)				
	SUBMITTED 10/14/02 TEAM LEADER	DANILO C. TRAJANO Project Director	ADRIANO M. DOROY Chief, Bridges Division	GILBERTO S. REYES Director IV (OIC)	MANUEL M. BONDAN Undersecretary / SIMEON A. DATUMANONG Secretary	PLARIDEL BYPASS - CONTRACT PACKAGE III	FULL SIZE A1		

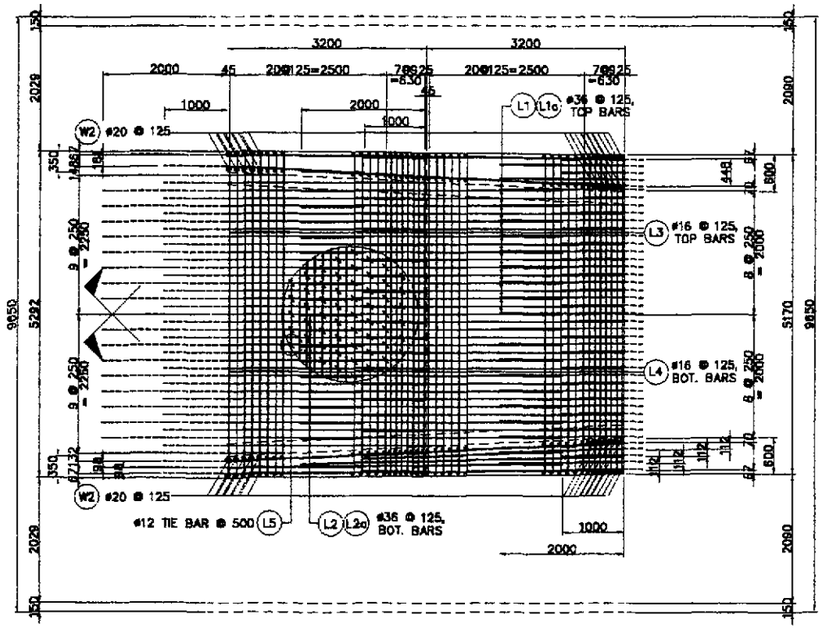

F SECTION
SCALE 1:100

G SECTION
SCALE 1:100

BAR BENDING DIAGRAM

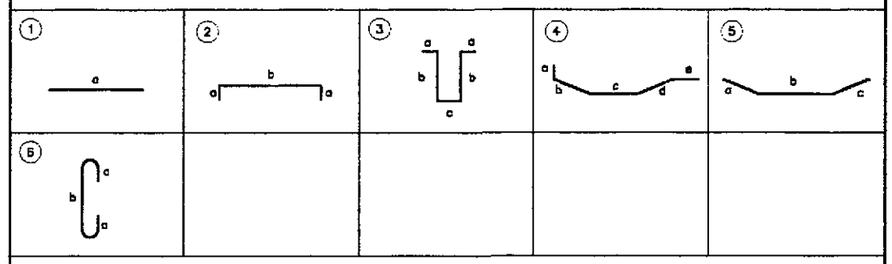

SCHEDULE OF REINFORCEMENT

LOCATION	BAR MARK	SIZE (mm)	BEND TYPE	DIMENSION(mm) OUT TO OUT a	b	c	d	e	f	LENGTH (mm)	NO. REQ'D.	UNIT WEIGHT (kg/m)	WEIGHT (Kg) GRADE 60	GRADE 40
B5 TO B6	S1	16	str	4500						4500	88	1.579		625.28
	S1a	16	str	3850						3850	84	1.579		510.65
	S2	16	str	4500						4500	88	1.579		625.28
	S2a	16	str	3850						3850	84	1.579		510.65
	S3	12	2	8550	125					8800	112	0.818		897.84
	S4	12	5	150	1875	595	2050	150		4820	224	0.818		883.18
	S5	12	str	5835						5835	112	0.818		534.56
	S6	12	6	125	390 (max)					541	2128	0.818		941.72
					192 (min)									
	L1	36	str	4200						4200	92	7.991	3087.72	
	L1a	36	str	4200						4200	88	7.991	2953.47	
	L2	36	str	4200						4200	92	7.991	3087.72	
	L2a	36	str	4200						4200	88	7.991	2953.47	
	L3	16	2	400	5310 (max)					6110	112	1.579		1080.54
					5225 (min)									
	L4	16	2	400	5225 (max)					6025	112	1.579		1065.51
					5085 (min)									
	L5	12	6	250	500					1000	1008	0.818		824.54
	W1	16	str	4500						4500	96	1.579		682.13
	W1a	16	str	3850						3850	48	1.579		291.80
	W1b	16	str	6800						6800	4	1.579		42.95
	W2	20	3	300	3025 (max)	500 (max)				6425	224	2.466	3549.07	
					2425 (min)	250 (min)								
	W3	12	5	250	1740	250				2240	56	0.818		102.61
	W4	12	6	250	400					900	448	0.818		329.82
										WEIGHT FOR GRADE 60 =			15631.46	
										WEIGHT FOR GRADE 40 =				9948.08
										TOTAL WEIGHT FOR 2 PIERS :				
										TOTAL WEIGHT FOR GRADE 60 =			31262.92	
										TOTAL WEIGHT FOR GRADE 40 =				19896.16

THE REINFORCEMENT SHOWN ON THIS TABLE IS FOR REFERENCE ONLY. THE CONTRACTOR SHOULD CHECK AND VERIFY ALL DIMENSIONS, SIZES AND QUANTITIES OF REINFORCEMENT.

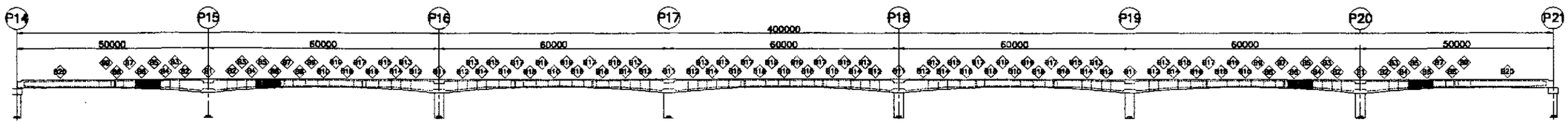

1 SLAB REINFORCEMENT DETAILS
SCALE AS SHOWN

JICA
JAPAN INTERNATIONAL COOPERATION AGENCY
KATAHIRA & ENGINEERS INTERNATIONAL
YACHIYO ENGINEERING CO., LTD.

	DATE	SIGNATURE
DESIGNED	9/21/02	M. SERRANO
CHECKED	9/23/02	J. E. SANTOS
SUBMITTED	10/14/02	TEAM LEADER

REPUBLIC OF THE PHILIPPINES
DEPARTMENT OF PUBLIC WORKS AND HIGHWAYS

PJHL – PMO	BUREAU OF DESIGN		OFFICE OF THE SECRETARY	
Submitted By:	Reviewed By:	Recommended By:	Recommended By: (See cover sheet for Signature)	Approved By: (See cover sheet for Signature/Approval)
DANILO C. TRAJANO	ADRIANO M. DOROY	GILBERTO S. REYES	MANUEL M. BONDAN	SIMEON A. DATUMANONG
Project Director	Chief, Bridges Division	Director IV (OIC)	Undersecretary	Secretary

PROJECT AND LOCATION :
THE DETAILED DESIGN STUDY ON UPGRADING INTER-URBAN HIGHWAY SYSTEM ALONG THE PAN-PHILIPPINE HIGHWAY (Plaridel, Cabanatuan and San Jose Bypasses)
PLARIDEL BYPASS - CONTRACT PACKAGE III

SCALE : AS SHOWN
FULL SIZE A1

SHEET CONTENTS :
BRIDGE NO. 8 ANGAT RIVER BRIDGE
REINFORCEMENT DETAILS FOR SEGMENT-B5 TO B6 (2 OF 2)
(INITIAL STAGE)

SHEET NO. : B8M-30

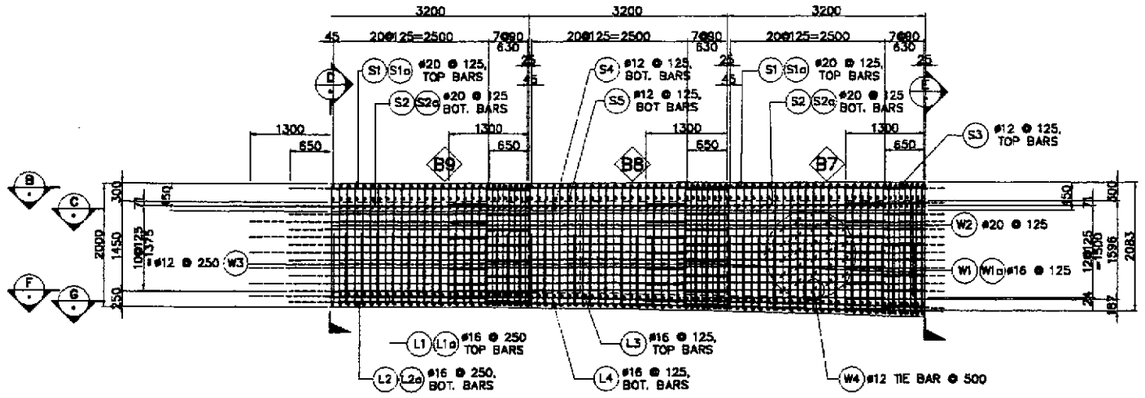

A SECTION
SCALE 1:100

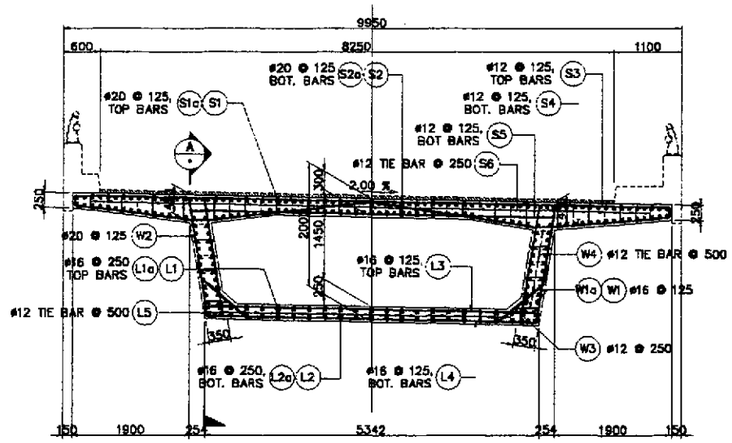

D SECTION
SCALE 1:100

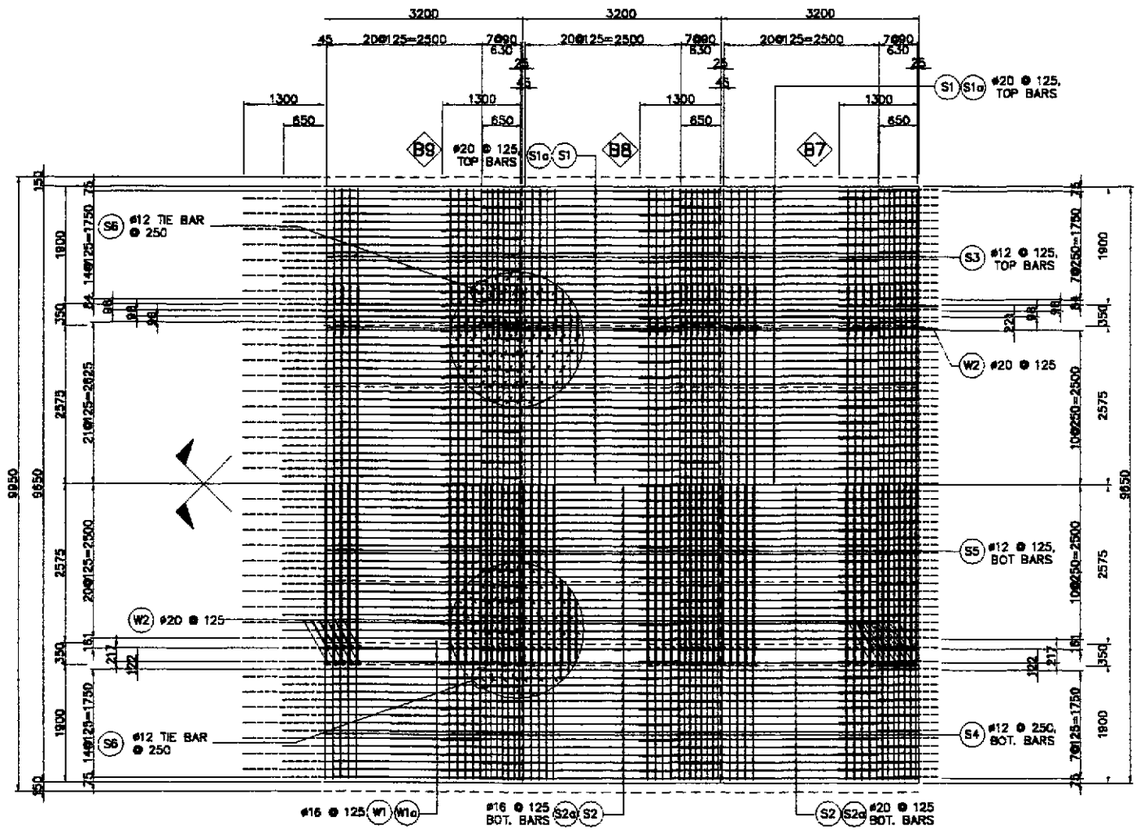

B SECTION
SCALE 1:100

C SECTION
SCALE 1:100

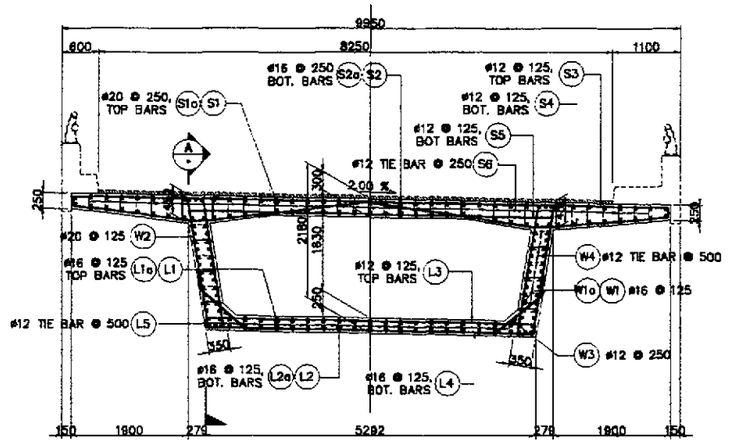

E SECTION
SCALE 1:100

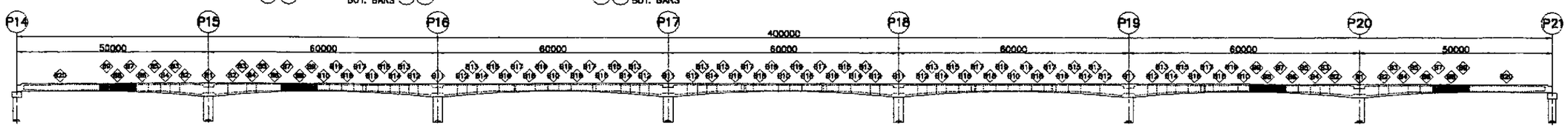

1 SLAB REINFORCEMENT DETAILS
SCALE AS SHOWN

JICA
JAPAN INTERNATIONAL COOPERATION AGENCY
KEI KATAHIRA & ENGINEERS INTERNATIONAL
YEC YACHIYO ENGINEERING CO., LTD.

	DATE	SIGNATURE
DESIGNED	9/21/02	
CHECKED	9/23/02	
SUBMITTED	10/4/02	TEAM LEADER

REPUBLIC OF THE PHILIPPINES
DEPARTMENT OF PUBLIC WORKS AND HIGHWAYS

FUHL – PMO	BUREAU OF DESIGN		OFFICE OF THE SECRETARY	
Submitted By:	Reviewed By:	Recommended By:	Recommended By: (See cover sheet for Signature)	Approved By: (See cover sheet for Signature/Approval)
DANILO C. TRAJANO, Project Director	ADRIANO M. DOROY, Chief, Bridges Division	GILBERTO S. REYES, Director IV (OIC)	MANUEL M. BONOAN, Undersecretary	SIMEON A. DATUMANONG, Secretary

PROJECT AND LOCATION :
THE DETAILED DESIGN STUDY ON UPGRADING INTER-URBAN HIGHWAY SYSTEM ALONG THE PAN-PHILIPPINE HIGHWAY (Plaridel, Cabanatuan and San Jose Bypasses)
PLARIDEL BYPASS - CONTRACT PACKAGE III

SCALE : AS SHOWN
FULL SIZE A1

SHEET CONTENTS :
BRIDGE NO. 8 ANGAT RIVER BRIDGE
REINFORCEMENT DETAILS FOR SEGMENT-B7 TO B9 (1 OF 2)
(INITIAL STAGE)

SHEET NO. : B8M-31

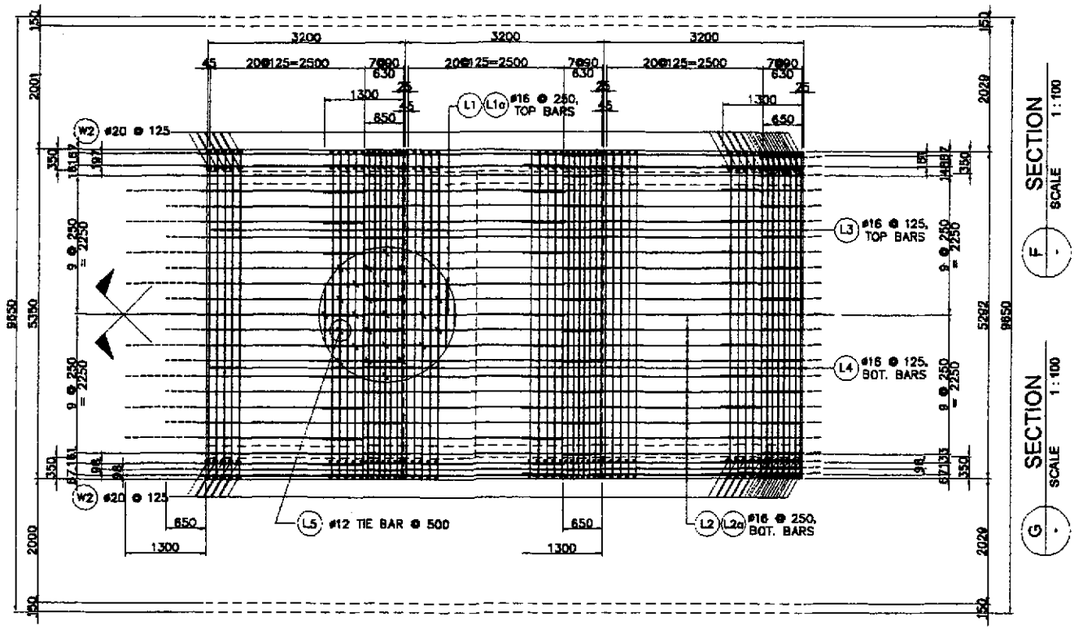

BAR BENDING DIAGRAM

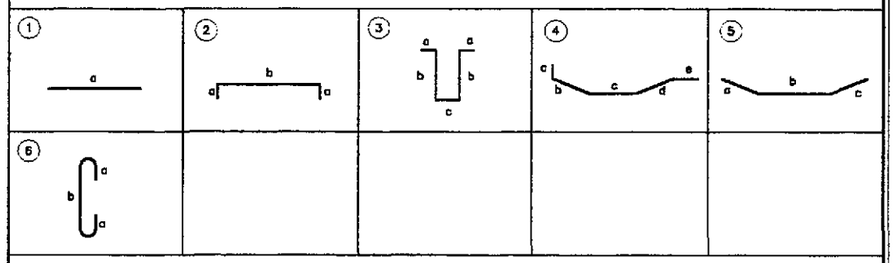

SCHEDULE OF REINFORCEMENT

LOCATION	BAR MARK	SIZE (mm)	BEND TYPE	DIMENSION(mm) OUT TO OUT a	b	c	d	e	f	LENGTH (mm)	NO. REQ'D.	UNIT WEIGHT (kg/m)	WEIGHT (Kg) GRADE 60	GRADE 40
B7 TO B9	S1	20	str	4500						4500	240	2.466	2663.28	
	S1a	20	str	3850						3850	234	2.466	2221.62	
	S2	20	str	4500						4500	228	2.466	2530.12	
	S2a	20	str	3850						3850	222	2.466	2107.69	
	S3	12	2	9550	125					9800	168	0.818		1346.76
	S4	12	5	150	1875	595	2050	150		4820	336	0.818		1324.77
	S5	12	str	5835						5835	168	0.818		801.87
	S6	16	6	125	380 (max)					541	3192	1.579		2726.73
					192 (min)									
	L1	16	str	4500						4500	72	1.579		511.60
	L1a	16	str	3850						3850	66	1.579		401.22
	L2	16	str	4500						4500	72	1.579		511.60
	L2a	16	str	3850						3850	66	1.579		401.22
	L3	16	2	250	5335 (max)					5835	168	1.579		1547.86
					5255 (min)									
	L4	16	2	250	5365 (max)					5765	168	1.579		1529.29
					5210 (min)									
	L5	12	6	250	500					1000	1512	0.818		1236.82
	W1	16	str	4500						4500	132	1.579		937.93
	W1a	16	str	3850						3850	132	1.579		802.45
	W2	20	3	300	2000 (max)	250				4840	336	2.466	4010.31	
					1900 (min)									
	W3	12	5	250	1740	250				2240	84	0.818		153.91
	W4	12	6	250	250					750	504	0.818		309.20
										WEIGHT FOR GRADE 60 =			13533.01	
										WEIGHT FOR GRADE 40 =				14543.23
										TOTAL WEIGHT FOR 2 PIERS :				
										TOTAL WEIGHT FOR GRADE 60 =			27066.03	
										TOTAL WEIGHT FOR GRADE 40 =				29086.45

THE REINFORCEMENT SHOWN ON THIS TABLE IS FOR REFERENCE ONLY. THE CONTRACTOR SHOULD CHECK AND VERIFY ALL DIMENSIONS, SIZES AND QUANTITIES OF REINFORCEMENT.

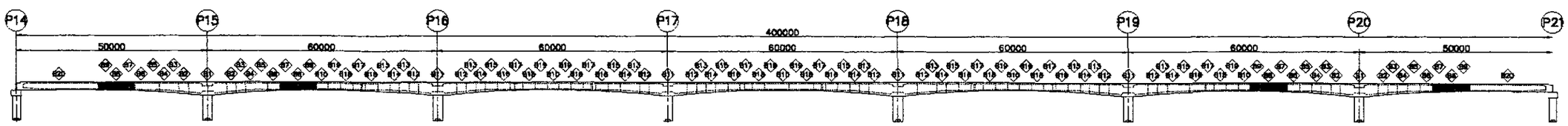

1 SLAB REINFORCEMENT DETAILS
SCALE AS SHOWN

JICA
JAPAN INTERNATIONAL COOPERATION AGENCY
KATAHIRA & ENGINEERS INTERNATIONAL
YACHIYO ENGINEERING CO., LTD.

	DATE	SIGNATURE
DESIGNED	9/21/02	M. SANGUIL
CHECKED	9/23/02	J. E. SANTOS
SUBMITTED	10/14/02	M. ROSANO TEAM LEADER

REPUBLIC OF THE PHILIPPINES
DEPARTMENT OF PUBLIC WORKS AND HIGHWAYS

PWHL – PMO	BUREAU OF DESIGN		OFFICE OF THE SECRETARY	
Submitted By:	Reviewed By:	Recommended By:	Recommended By: (See cover sheet for Signature)	Approved By: (See cover sheet for Signature/Approval)
DANILO C. TRAJANO	ADRIANO M. DOROY	GILBERTO S. REYES	MANUEL M. BONGAN	SIMEON A. DATUMANONG
Project Director	Chief, Bridges Division	Director IV (OIC)	Undersecretary	Secretary

PROJECT AND LOCATION :
THE DETAILED DESIGN STUDY ON UPGRADING INTER-URBAN HIGHWAY SYSTEM ALONG THE PAN-PHILIPPINE HIGHWAY (Plaridel, Cabanatuan and San Jose Bypasses)
PLARIDEL BYPASS - CONTRACT PACKAGE III

SCALE : AS SHOWN
FULL SIZE A1

SHEET CONTENTS :
BRIDGE NO. 8 ANGAT RIVER BRIDGE
REINFORCEMENT DETAILS FOR SEGMENT-B7 TO B9 (2 OF 2)
(INITIAL STAGE)

SHEET NO. : B8M-32

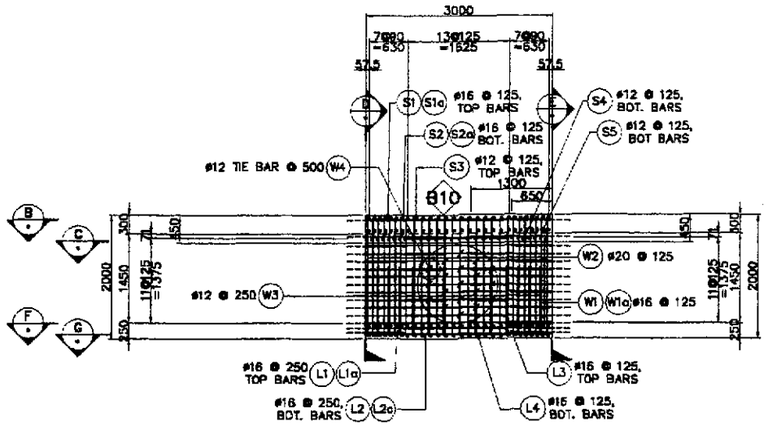

A SECTION
SCALE 1 : 100

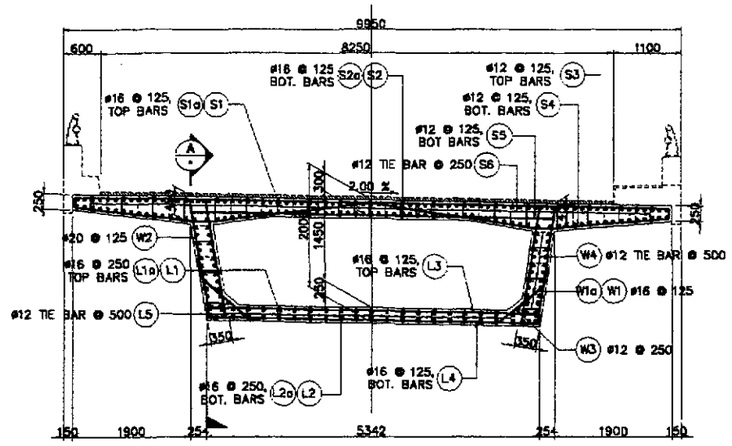

D SECTION
SCALE 1 : 100

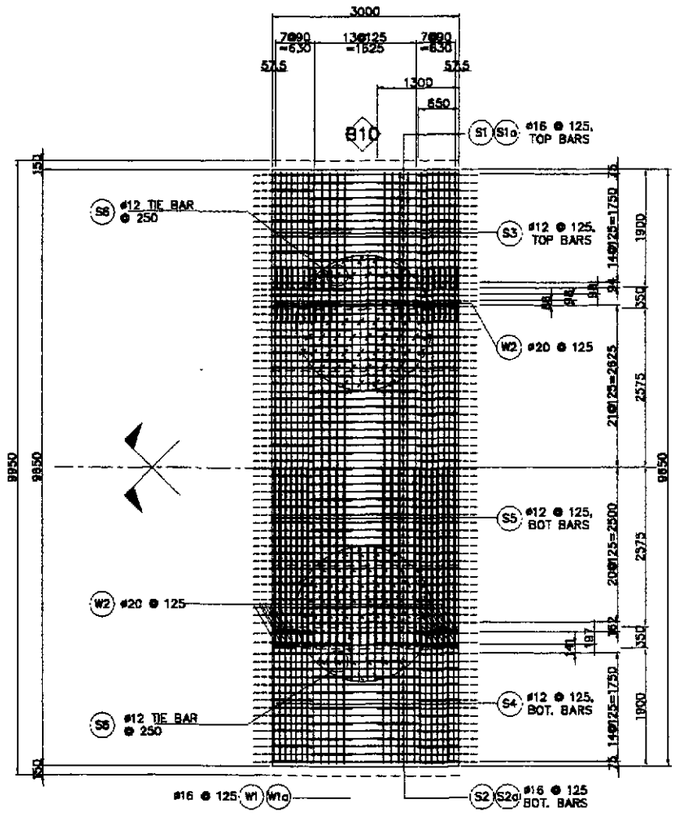

B SECTION
SCALE 1 : 100

C SECTION
SCALE 1 : 100

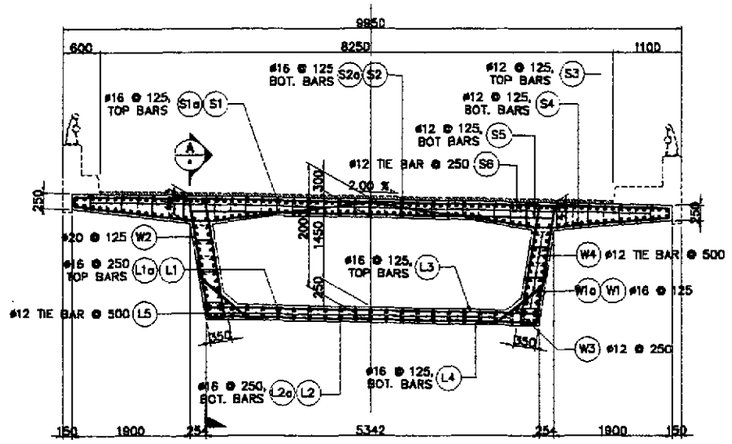

E SECTION
SCALE 1 : 100

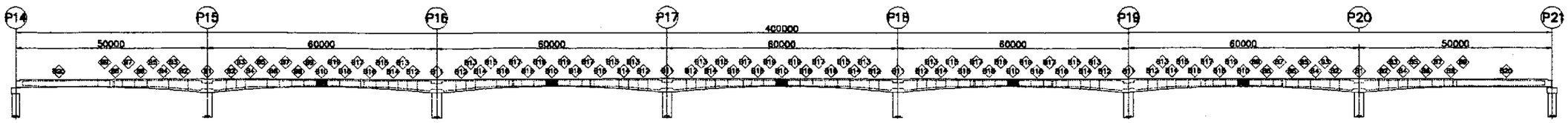

1 SLAB REINFORCEMENT DETAILS
SCALE AS SHOWN

JICA JAPAN INTERNATIONAL COOPERATION AGENCY KEI KATAHIRA & ENGINEERS INTERNATIONAL YEC YACHIYO ENGINEERING CO., LTD.	DATE / SIGNATURE DESIGNED 9/21/02 M. SUMAGE CHECKED 9/23/02 J. C. SANTOS SUBMITTED 10/17/02 M. VIGILAR TEAM LEADER	REPUBLIC OF THE PHILIPPINES DEPARTMENT OF PUBLIC WORKS AND HIGHWAYS PJHL – PMO: Submitted By: DANILO C. TRAJANO, Project Director BUREAU OF DESIGN: Reviewed By: ADRIANO N. DOROY, Chief, Bridges Division; Recommended By: GILBERTO S. REYES, Director IV (OIC)	OFFICE OF THE SECRETARY: Recommended By: (See cover sheet for Signature) MANUEL M. BONOAN, Undersecretary; Approved By: (See cover sheet for Signature/Approval) SIMEON A. DATUMANONG, Secretary	PROJECT AND LOCATION : THE DETAILED DESIGN STUDY ON UPGRADING INTER-URBAN HIGHWAY SYSTEM ALONG THE PAN-PHILIPPINE HIGHWAY (Plaridel, Cabanatuan and San Jose Bypasses) PLARIDEL BYPASS - CONTRACT PACKAGE III	SCALE : AS SHOWN FULL SIZE A1	SHEET CONTENTS : BRIDGE NO. 8 ANGAT RIVER BRIDGE REINFORCEMENT DETAILS FOR CENTER CLOSURE-B10 (1 OF 2) (INITIAL STAGE)	SHEET NO. : B8M-33

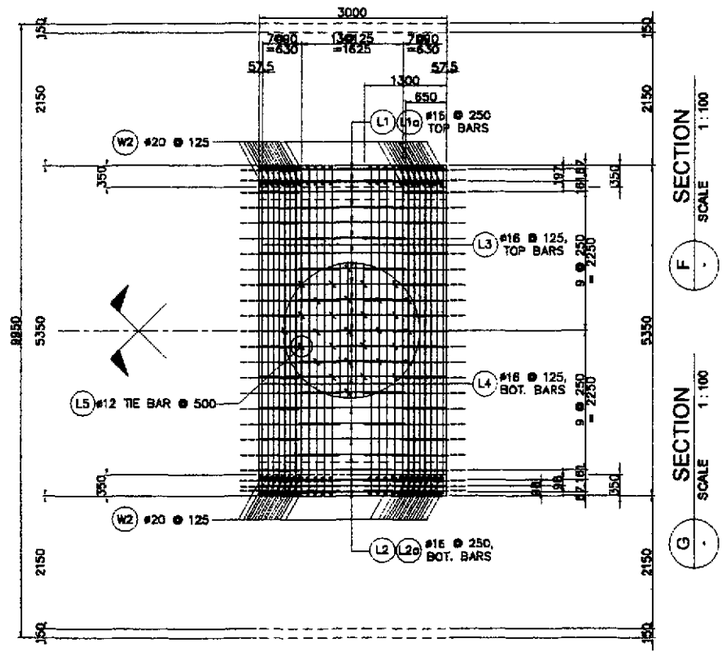

BAR BENDING DIAGRAM

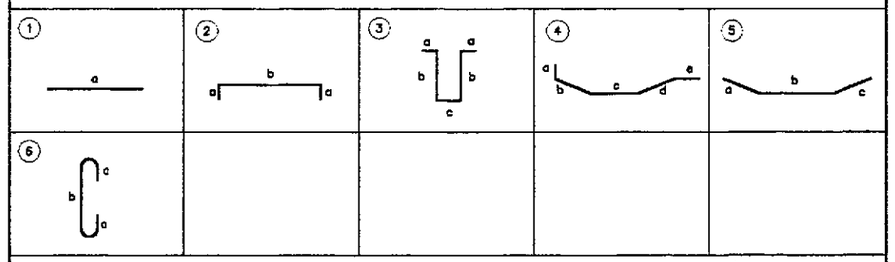

SCHEDULE OF REINFORCEMENT

LOCATION	BAR MARK	SIZE (mm)	BEND TYPE	DIMENSION(mm) OUT TO OUT a	b	c	d	e	f	LENGTH (mm)	NO. REQ'D.	UNIT WEIGHT (kg/m)	WEIGHT (Kg) GRADE 60	GRADE 40
B10	S1	16	str	4300						4300	40	1.579		271.59
	S1a	16	str	3650						3650	39	1.579		224.77
	S2	16	str	4300						4300	40	1.579		271.59
	S2a	16	str	3650						3650	39	1.579		224.77
	S3	12	2	9550	125					9800	28	0.818		224.46
	S4	12	5	150	1875	595	2050	150		4820	56	0.818		220.79
	S5	12	str	5835						5835	28	0.818		133.64
	S6	16	6	125	380 (max)					541	532	1.579		454.46
					192 (min)									
	L1	16	str	4300						4300	12	1.579		81.48
	L1a	16	str	3650						3650	11	1.579		63.40
	L2	16	str	4300						4300	12	1.579		81.48
	L2a	16	str	3650						3650	11	1.579		63.40
	L3	16	2	250	5275 (max)					5775	28	1.579		255.32
					5250 (min)									
	L4	16	2	250	5275 (max)					5775	28	1.579		255.32
					5250 (min)									
	L5	12	6	250	500					1000	252	0.818		206.14
	W1	16	str	4500						4500	22	1.579		156.32
	W1a	16	str	3850						3850	22	1.579		133.74
	W2	20	3	300	1800	250				4650	56	2.466	642.15	
	W3	12	5	250	1740	250				2240	28	0.818		51.30
	W4	12	6	250	250					750	168	0.818		103.07
												WEIGHT FOR GRADE 60 =	642.15	
												WEIGHT FOR GRADE 40 =		3477.04
												TOTAL WEIGHT FOR 5 CLOSURES :		
												TOTAL WEIGHT FOR GRADE 60	1284.29	
												TOTAL WEIGHT FOR GRADE 40 =		6954.07

THE REINFORCEMENT SHOWN ON THIS TABLE IS FOR REFERENCE ONLY. THE CONTRACTOR SHOULD CHECK AND VERIFY ALL DIMENSIONS, SIZES AND QUANTITIES OF REINFORCEMENT.

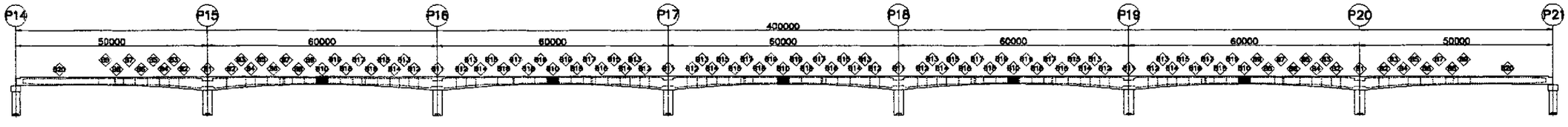

1 SLAB REINFORCEMENT DETAILS
SCALE AS SHOWN

JICA
JAPAN INTERNATIONAL COOPERATION AGENCY
KEI KATAHIRA & ENGINEERS INTERNATIONAL
YEC YACHIYO ENGINEERING CO., LTD.

	DATE	SIGNATURE
DESIGNED	9/21/02	M. SUMIMOTO
CHECKED	9/23/02	J. C. SANTOS
SUBMITTED	10/14/02	S. KIKUCHI TEAM LEADER

REPUBLIC OF THE PHILIPPINES
DEPARTMENT OF PUBLIC WORKS AND HIGHWAYS

PUH. - PMO	BUREAU OF DESIGN		OFFICE OF THE SECRETARY	
Submitted By:	Reviewed By:	Recommended By:	Recommended By: (See cover sheet for Signature)	Approved By: (See cover sheet for Signature/Approval)
DANILO C. TRAJANO	ADRIANO M. DORDY	GILBERTO S. REYES	MANUEL M. BONDAN	SIMEON A. DATUMANONG
Project Director	Chief, Bridges Division	Director IV (OIC)	Undersecretary	Secretary

PROJECT AND LOCATION :
THE DETAILED DESIGN STUDY ON UPGRADING INTER-URBAN HIGHWAY SYSTEM ALONG THE PAN-PHILIPPINE HIGHWAY (Plaridel, Cabanatuan and San Jose Bypasses)
PLARIDEL BYPASS - CONTRACT PACKAGE III

SCALE : AS SHOWN
FULL SIZE A1

SHEET CONTENTS :
BRIDGE NO. 8 ANGAT RIVER BRIDGE
REINFORCEMENT DETAILS FOR CENTER CLOSURE-B10 (2 OF 2)
(INITIAL STAGE)

SHEET NO. : B8M-34

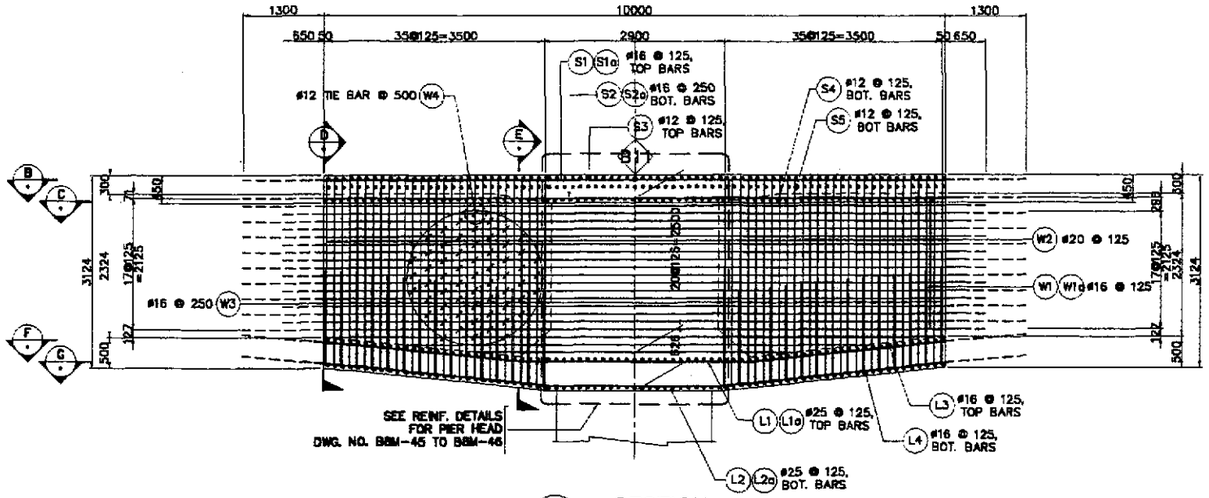

A SECTION
SCALE 1:100

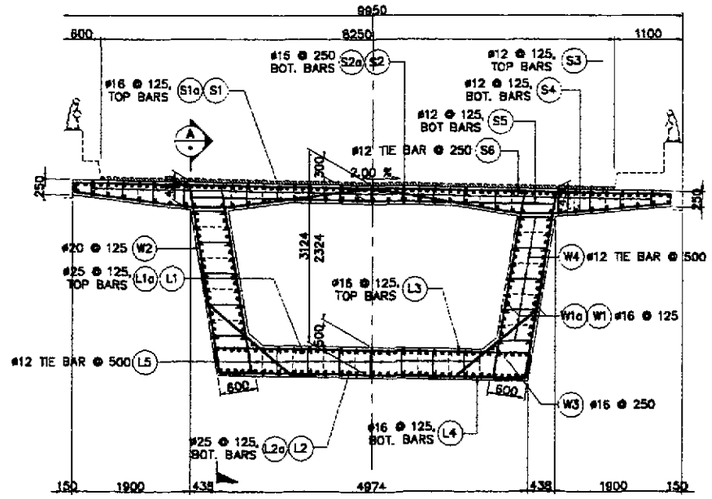

D SECTION
SCALE 1:100

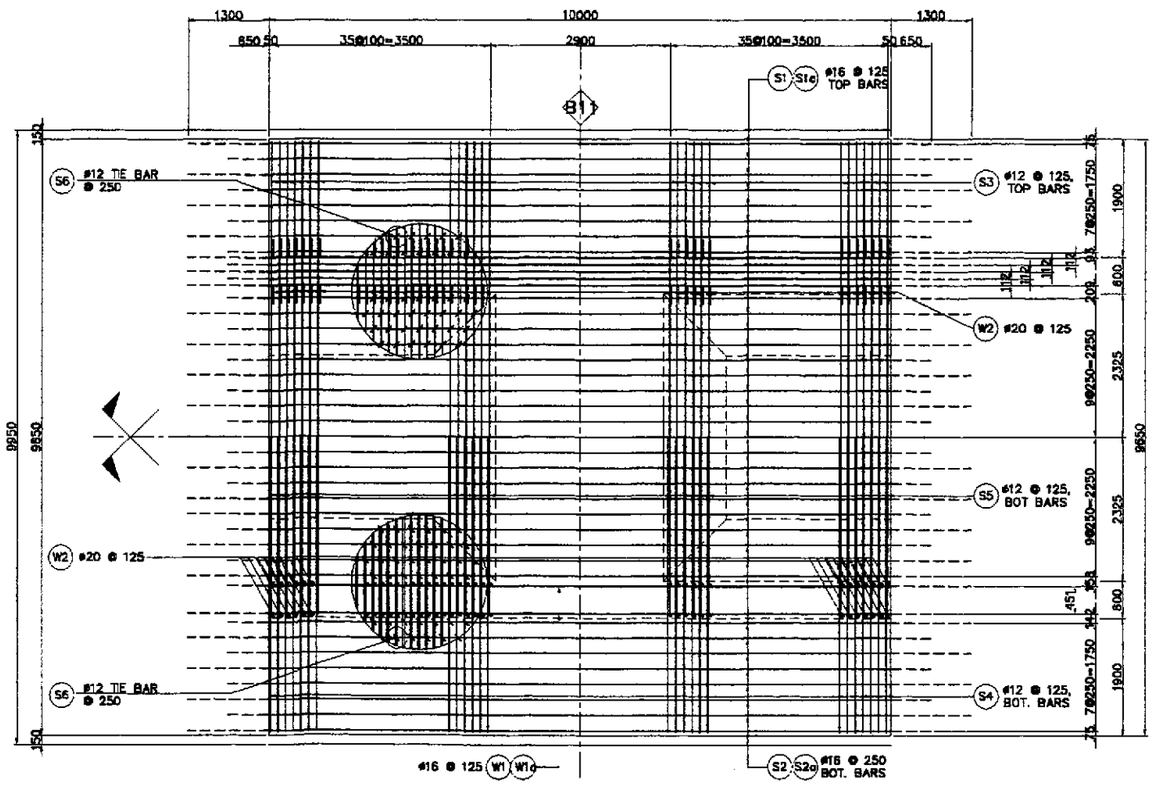

B SECTION
SCALE 1:100

C SECTION
SCALE 1:100

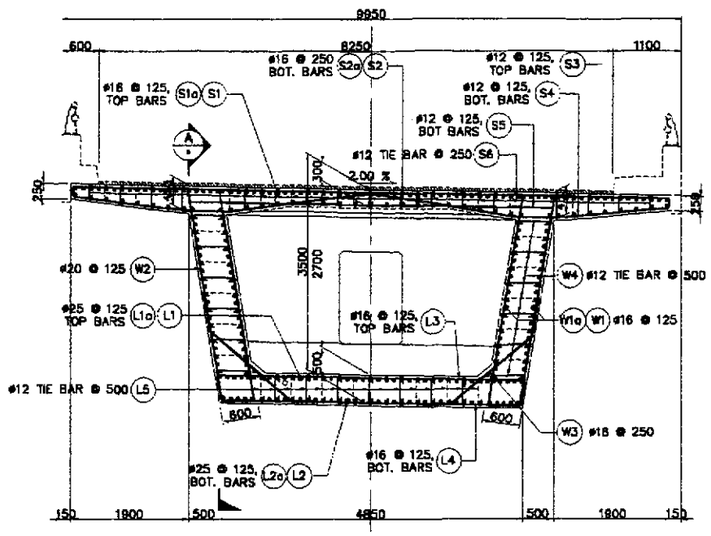

E SECTION
SCALE 1:100

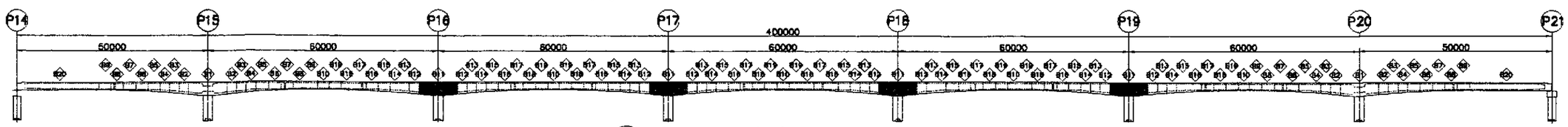

1 SLAB REINFORCEMENT DETAILS
SCALE AS SHOWN

JICA
JAPAN INTERNATIONAL COOPERATION AGENCY
KATAHIRA & ENGINEERS INTERNATIONAL
YACHIYO ENGINEERING CO., LTD.

	DATE	SIGNATURE
DESIGNED	9/21/02	
CHECKED	9/23/02	J. C. SANTOS
SUBMITTED	10/11/02	M. RIVERA TEAM LEADER

REPUBLIC OF THE PHILIPPINES
DEPARTMENT OF PUBLIC WORKS AND HIGHWAYS

FUHL - PMO	BUREAU OF DESIGN		OFFICE OF THE SECRETARY	
Submitted By:	Reviewed By:	Recommended By:	Recommended By: (See cover sheet for Signature)	Approved By: (See cover sheet for Signature/Approval)
DANILO C. TRAJANO	ADRIANO M. DOROY	GILBERTO S. REYES	MANUEL M. BONDAN	SIMEON A. DATUMANONG
Project Director	Chief, Bridges Division	Director IV (OIC)	Undersecretary	Secretary

PROJECT AND LOCATION :
THE DETAILED DESIGN STUDY ON UPGRADING INTER-URBAN HIGHWAY SYSTEM ALONG THE PAN-PHILIPPINE HIGHWAY (Plaridel, Cabanatuan and San Jose Bypasses)
PLARIDEL BYPASS - CONTRACT PACKAGE III

SCALE : AS SHOWN
FULL SIZE A1

SHEET CONTENTS :
BRIDGE NO. 8 ANGAT RIVER BRIDGE
REINFORCEMENT DETAILS FOR PIER TABLE-B11 (1 OF 2)
(INITIAL STAGE)

SHEET NO. : B8M-35

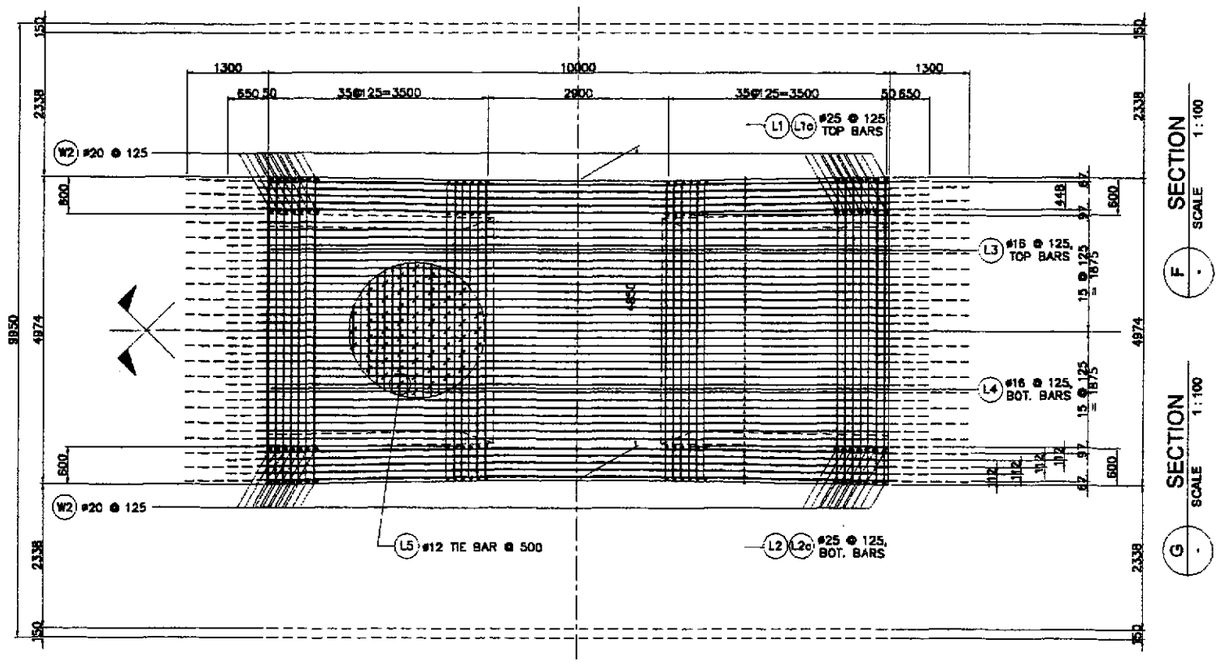

BAR BENDING DIAGRAM

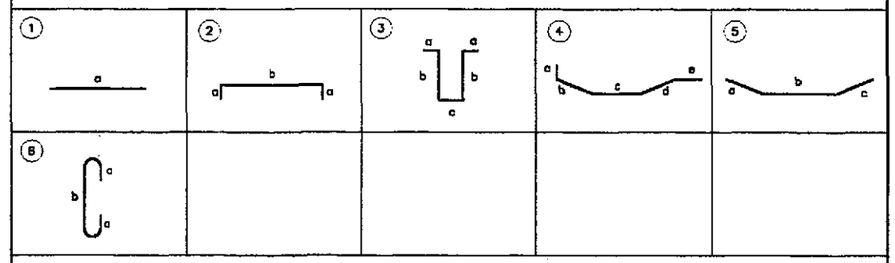

SCHEDULE OF REINFORCEMENT

LOCATION	BAR MARK	SIZE (mm)	BEND TYPE	DIMENSION(mm) OUT TO OUT a	b	c	d	e	f	LENGTH (mm)	NO. REQ'D.	UNIT WEIGHT (kg/m)	WEIGHT (Kg) GRADE 60	GRADE 40
B11	S1	16	str	12600						12600	40	1.579		795.82
	S1a	16	str	11300						11300	39	1.579		695.87
	S2	16	str	12600						12600	20	1.579		397.91
	S2a	16	str	11300						11300	19	1.579		339.01
	S3	12	2	9560	125					9800	72	0.818		577.18
	S4	12	5	150	1875	595	2050	150		4820	144	0.818		567.78
	S5	12	str	5835						5835	72	0.818		343.66
	S6	12	6	125	380 (max)					541	1358	0.818		605.39
					192 (min)									
	L1	25	5	5170	3730	5170				14070	21	3.854	1138.74	
	L1a	25	5	4170	3730	4170				12070	20	3.854	930.36	
	L2	25	5	5670	2780	5670				14120	21	3.854	1142.79	
	L2a	25	5	4670	2780	4670				12120	20	3.854	934.21	
	L3	16	2	400	4900					5700	72	1.579		648.02
	L4	16	2	400	4760					5560	72	1.579		632.11
	L5	12	6	250	500					1000	504	0.818		412.27
	W1	16	str	12600						12600	36	1.579		716.23
	W1a	16	str	11300						11300	36	1.579		642.34
	W2	20	3	300	3400 (max)	500				7525	180	2.466	3340.20	
					3025 (min)									
	W3	12	5	250	1740	250				2240	36	0.818		65.96
	W4	12	6	250	400					900	720	0.818		530.06
										WEIGHT FOR GRADE 60 =			7486.29	
										WEIGHT FOR GRADE 40 =				7959.56
										TOTAL WEIGHT FOR 4 PIERS :				
										WEIGHT FOR GRADE 60 =			29945.17	
										WEIGHT FOR GRADE 40 =				31878.35

THE REINFORCEMENT SHOWN ON THIS TABLE IS FOR REFERENCE ONLY. THE CONTRACTOR SHOULD CHECK AND VERIFY ALL DIMENSIONS, SIZES AND QUANTITIES OF REINFORCEMENT.

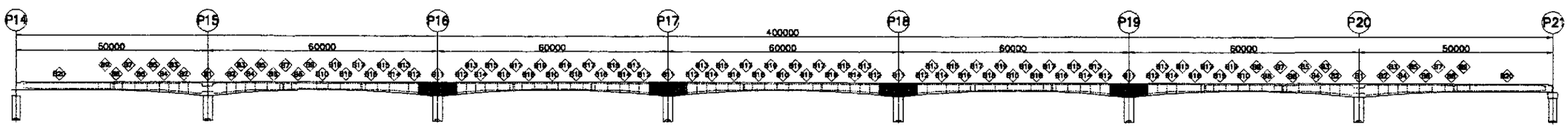

1 SLAB REINFORCEMENT DETAILS
SCALE AS SHOWN

JICA
JAPAN INTERNATIONAL COOPERATION AGENCY
KEI KATAHIRA & ENGINEERS INTERNATIONAL
YEC YACHIYO ENGINEERING CO., LTD.

	DATE	SIGNATURE
DESIGNED	9/21/02	L. S. NAVAL
CHECKED	9/25/02	SANTOS
SUBMITTED	10/14/02	M. KUNDE TEAM LEADER

REPUBLIC OF THE PHILIPPINES
DEPARTMENT OF PUBLIC WORKS AND HIGHWAYS

PJHL - PMO	BUREAU OF DESIGN		OFFICE OF THE SECRETARY	
Submitted By:	Reviewed By:	Recommended By:	Recommended By: (See cover sheet for Signature)	Approved By: (See cover sheet for Signature/Approval)
DANILO C. TRAJANO	ADRIANO M. DOROY	GILBERTO S. REYES	MANUEL M. BONDAN	SIMEON A. DATUMANONG
Project Director	Chief, Bridges Division	Director IV (OIC)	Undersecretary	Secretary

PROJECT AND LOCATION :
THE DETAILED DESIGN STUDY ON UPGRADING INTER-URBAN HIGHWAY SYSTEM ALONG THE PAN-PHILIPPINE HIGHWAY (Plaridel, Cabanatuan and San Jose Bypasses)
PLARIDEL BYPASS - CONTRACT PACKAGE III

SCALE : AS SHOWN
FULL SIZE A1

SHEET CONTENTS :
BRIDGE NO. 8 ANGAT RIVER BRIDGE
REINFORCEMENT DETAILS FOR PIER TABLE-B11 (2 OF 2)
(INITIAL STAGE)

SHEET NO. : B8M-36

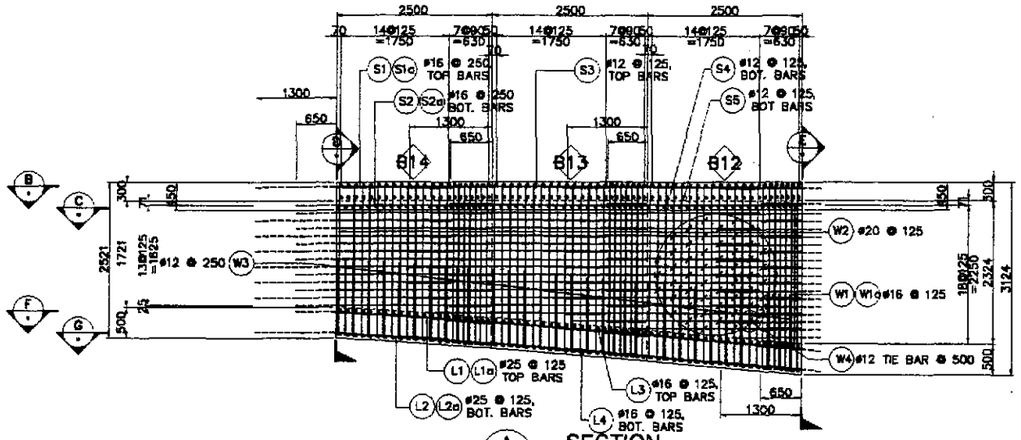

A SECTION
SCALE 1 : 100

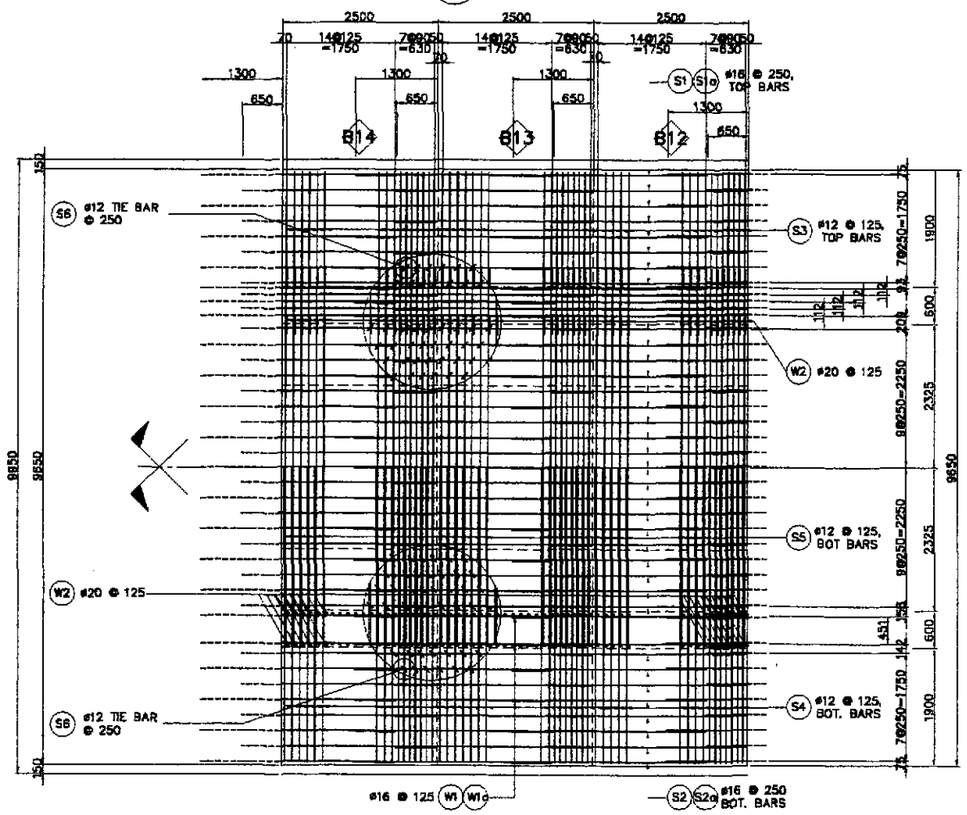

B SECTION
SCALE 1 : 100

C SECTION
SCALE 1 : 100

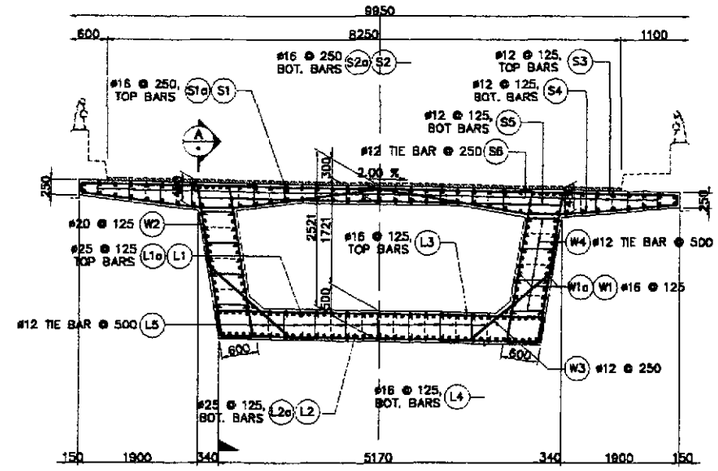

D SECTION
SCALE 1 : 100

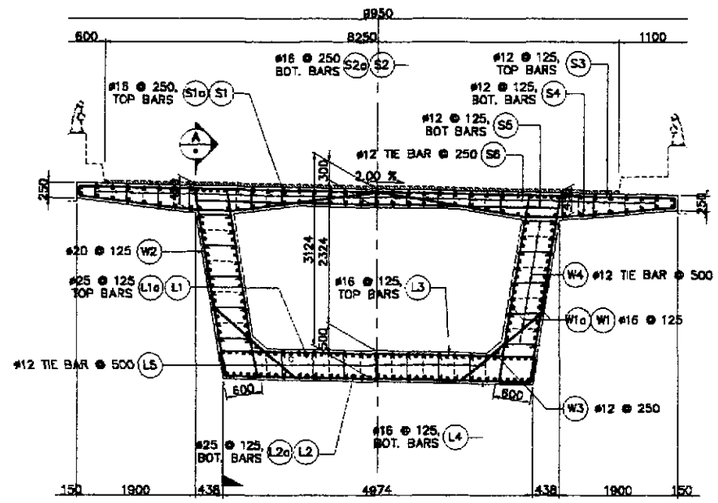

E SECTION
SCALE 1 : 100

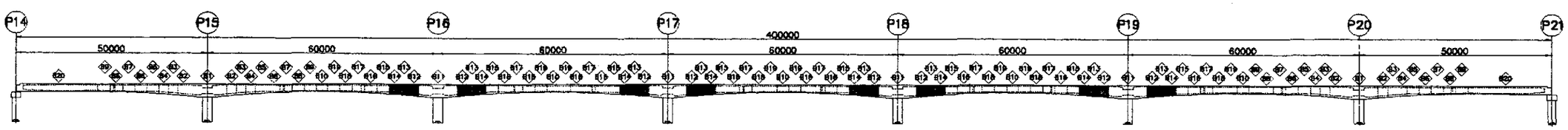

1 SLAB REINFORCEMENT DETAILS
SCALE AS SHOWN

JICA
JAPAN INTERNATIONAL COOPERATION AGENCY
KEI KATAHIRA & ENGINEERS INTERNATIONAL
YEO YACHIYO ENGINEERING CO., LTD.

	DATE	SIGNATURE
DESIGNED	9/21/02	
CHECKED	9/23/02	J. E. SANTOS
SUBMITTED	10/14/02	TEAM LEADER

REPUBLIC OF THE PHILIPPINES
DEPARTMENT OF PUBLIC WORKS AND HIGHWAYS

P.H.L. – PMO	BUREAU OF DESIGN		OFFICE OF THE SECRETARY	
Submitted By:	Reviewed By:	Recommended By:	Recommended By: (See cover sheet for Signature)	Approved By: (See cover sheet for Signature/Approval)
DANILO C. TRAJANO, Project Director	ADRIANO M. DOROY, Chief, Bridges Division	GILBERTO S. REYES, Director IV (OIC)	MANUEL M. BONDAN, Undersecretary	SIMEON A. DATUMANONG, Secretary

PROJECT AND LOCATION :
THE DETAILED DESIGN STUDY ON UPGRADING INTER-URBAN HIGHWAY SYSTEM ALONG THE PAN-PHILIPPINE HIGHWAY (Plaridel, Cabanatuan and San Jose Bypasses)
PLARIDEL BYPASS - CONTRACT PACKAGE III

SCALE : AS SHOWN
FULL SIZE A1

SHEET CONTENTS :
BRIDGE NO. 8 ANGAT RIVER BRIDGE
REINFORCEMENT DETAILS FOR SEGMENT-B12 TO B14 (1 OF 2)
(INITIAL STAGE)

SHEET NO. : B8M-37

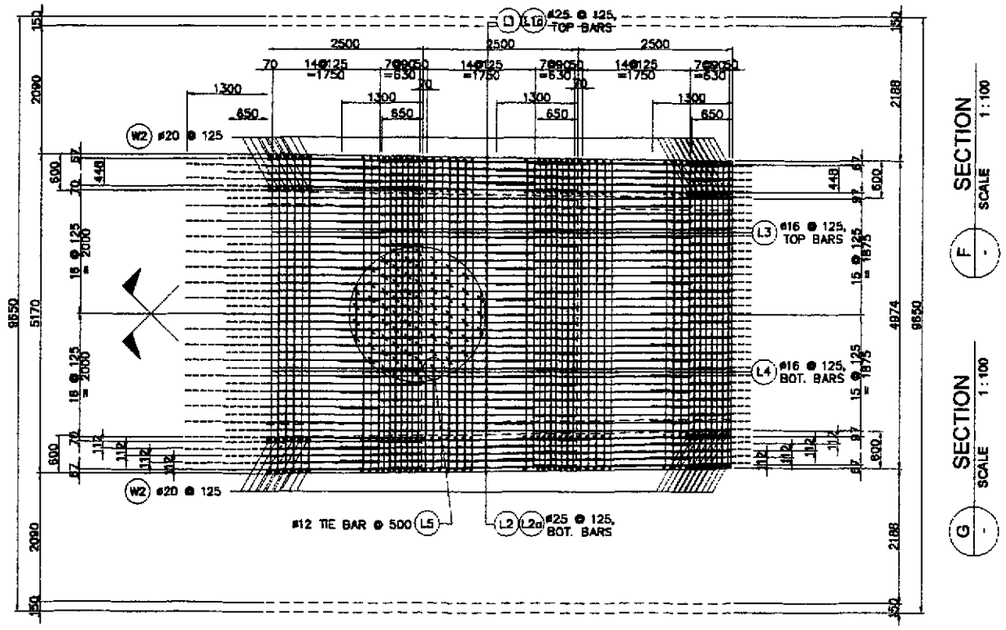

BAR BENDING DIAGRAM

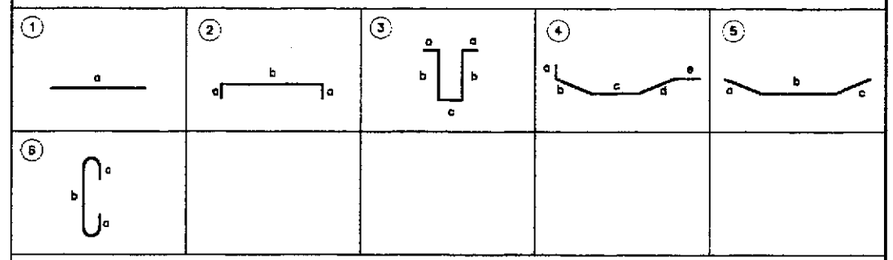

SCHEDULE OF REINFORCEMENT

LOCATION	BAR MARK	SIZE (mm)	BEND TYPE	DIMENSION(mm) OUT TO OUT a	b	c	d	e	f	LENGTH (mm)	NO. REQ'D.	UNIT WEIGHT (kg/m)	WEIGHT (Kg) GRADE 60	GRADE 40
B12 TO B14	S1	16	str	3800						3800	138	1.579		826.03
	S1a	16	str	3150						3150	132	1.579		656.55
	S2	16	str	3800						3800	138	1.579		826.03
	S2a	16	str	3150						3150	132	1.579		656.55
	S3	12	2	9550	125					9800	132	0.818		1058.16
	S4	12	5	150	1875	585	2050	150		4820	264	0.818		1040.89
	S5	12	str	5835						5835	132	0.818		630.04
	S6	12	6	125	380 (max)					541	2508	0.818		1109.89
					192 (min)									
	L1	25	str	4500						4500	132	3.854	2289.28	
	L1a	25	str	3500						3500	126	3.854	1699.61	
	L2	25	str	4500						4500	132	3.854	2289.28	
	L2a	25	str	3500						3500	126	3.854	1699.61	
	L3	16	2	400	5285 (max)					5960	132	1.579		1242.23
					5035 (min)									
	L4	16	2	400	5076 (max)					5773	132	1.579		1203.15
					4875 (min)									
	L5	12	6	250	500					1000	1188	0.818		971.78
	W1	16	str	3800						3800	168	1.579		1008.03
	W1a	16	str	3150						3150	168	1.579		835.61
	W1b	16	str	5250 (max)						3375	96	1.579		511.60
				1500 (min)										
	W2	20	3	300	3025 (max)	500				6550	132	2.466	2132.10	
					2425 (min)									
	W3	12	5	250	1740	250				2240	132	0.818		241.87
	W4	12	6	250	400					900	1320	0.818		971.78

WEIGHT FOR GRADE 60 = 10109.88
WEIGHT FOR GRADE 40 = 13794.18
TOTAL WEIGHT FOR 4 PIERS :
TOTAL WEIGHT FOR GRADE 60 = 40439.53
TOTAL WEIGHT FOR GRADE 40 = 55176.73

THE REINFORCEMENT SHOWN ON THIS TABLE IS FOR REFERENCE ONLY. THE CONTRACTOR SHOULD CHECK AND VERIFY ALL DIMENSIONS, SIZES AND QUANTITIES OF REINFORCEMENT.

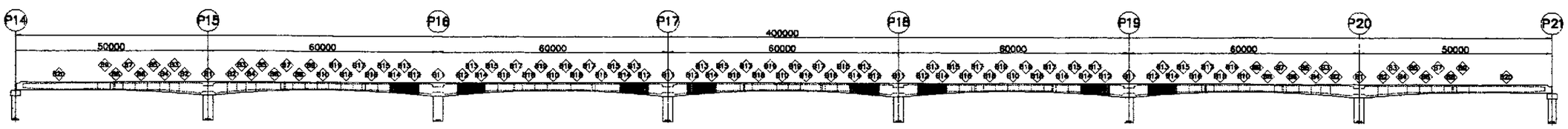

1 SLAB REINFORCEMENT DETAILS
SCALE AS SHOWN

JICA
JAPAN INTERNATIONAL COOPERATION AGENCY
KATAHIRA & ENGINEERS INTERNATIONAL
YACHIYO ENGINEERING CO., LTD.

	DATE	SIGNATURE
DESIGNED	9/21/02	
CHECKED	9/23/02	J. C. SANTOS
SUBMITTED	10/14/02	TEAM LEADER

REPUBLIC OF THE PHILIPPINES
DEPARTMENT OF PUBLIC WORKS AND HIGHWAYS

PUHL - PMO	BUREAU OF DESIGN		OFFICE OF THE SECRETARY	
Submitted By:	Reviewed By:	Recommended By:	Recommended By: (See cover sheet for Signature)	Approved By: (See cover sheet for Signature/Approval)
DANILO C. TRAJANO	ADRIANO M. DOROY	GILBERTO S. REYES	MANUEL M. BONDAN	SIMEON A. DATUMANONG
Project Director	Chief, Bridges Division	Director IV (OIC)	Undersecretary	Secretary

PROJECT AND LOCATION :
THE DETAILED DESIGN STUDY ON UPGRADING INTER-URBAN HIGHWAY SYSTEM ALONG THE PAN-PHILIPPINE HIGHWAY (Plaridel, Cabanatuan and San Jose Bypasses)
PLARIDEL BYPASS - CONTRACT PACKAGE III

SCALE : AS SHOWN
FULL SIZE A1

SHEET CONTENTS :
BRIDGE NO. 8 ANGAT RIVER BRIDGE
REINFORCEMENT DETAILS FOR SEGMENT-B12 TO B14 (2 OF 2)
(INITIAL STAGE)

SHEET NO. : B8M-38

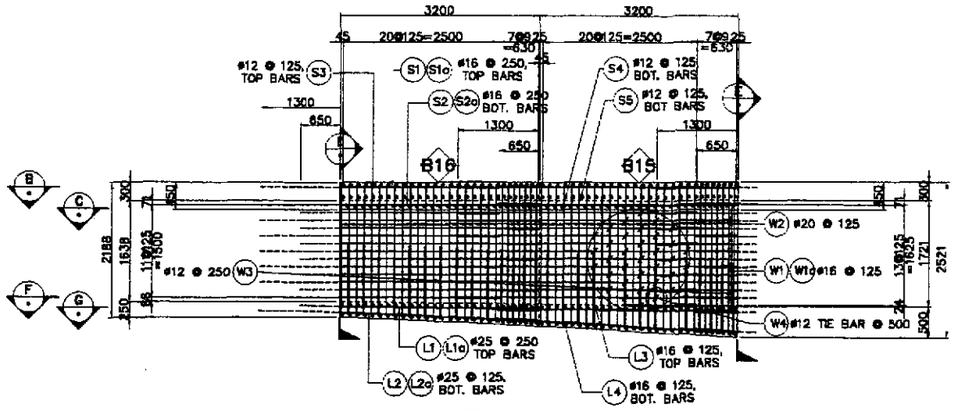

A SECTION
SCALE 1 : 100

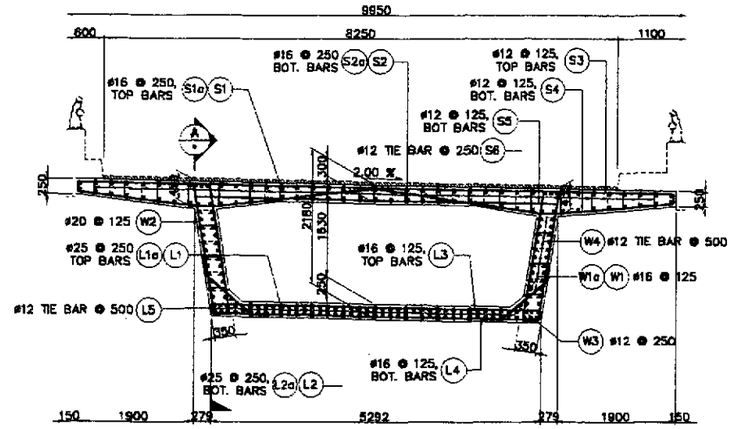

D SECTION
SCALE 1 : 100

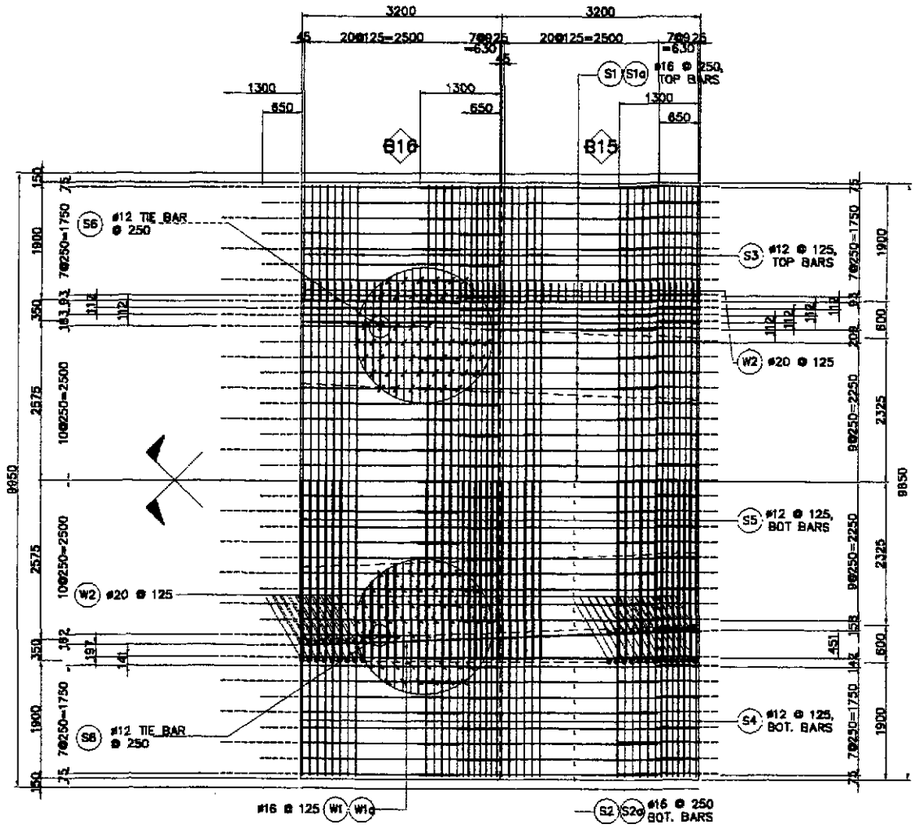

B SECTION
SCALE 1:100

C SECTION
SCALE 1:100

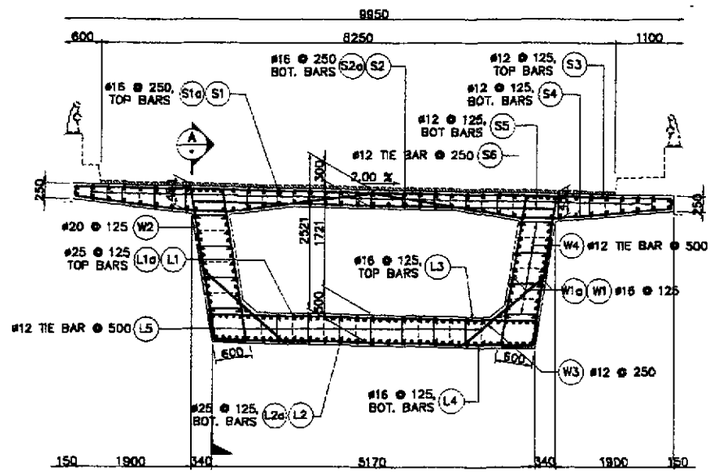

E SECTION
SCALE 1 : 100

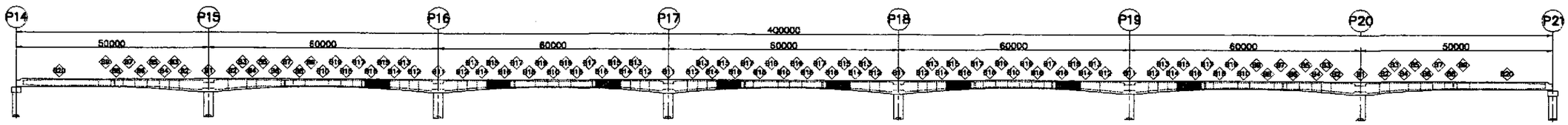

1 SLAB REINFORCEMENT DETAILS
SCALE AS SHOWN

JICA
JAPAN INTERNATIONAL COOPERATION AGENCY
KATAHIRA & ENGINEERS INTERNATIONAL
YACHIYO ENGINEERING CO., LTD.

	DATE	SIGNATURE
DESIGNED	9/21/02	M. S. Kawa
CHECKED	9/23/02	J. Z. Santos
SUBMITTED	10/14/02	M. Kuchi TEAM LEADER

REPUBLIC OF THE PHILIPPINES
DEPARTMENT OF PUBLIC WORKS AND HIGHWAYS

PJHL – PMO	BUREAU OF DESIGN		OFFICE OF THE SECRETARY	
Submitted By:	Reviewed By:	Recommended By:	Recommended By: (See cover sheet for Signature)	Approved By: (See cover sheet for Signature/Approval)
DANILO C. TRAJANO	ADRIANO M. DOROY	GILBERTO S. REYES	MANUEL M. BONOAN	SIMEON A. DATUMANONG
Project Director	Chief, Bridges Division	Director IV (OIC)	Undersecretary	Secretary

PROJECT AND LOCATION :
THE DETAILED DESIGN STUDY ON UPGRADING INTER-URBAN HIGHWAY SYSTEM ALONG THE PAN-PHILIPPINE HIGHWAY (Plaridel, Cabanatuan and San Jose Bypasses)
PLARIDEL BYPASS - CONTRACT PACKAGE III

SCALE : AS SHOWN
FULL SIZE A1

SHEET CONTENTS :
BRIDGE NO. 8 ANGAT RIVER BRIDGE
REINFORCEMENT DETAILS FOR SEGMENT-B15 TO B16 (1 OF 2)
(INITIAL STAGE)

SHEET NO. : B8M-39

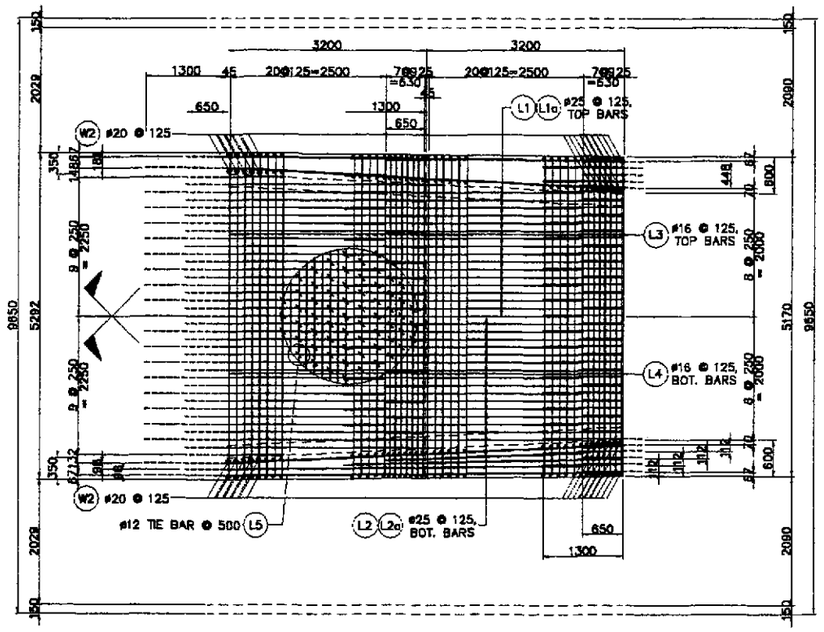

F SECTION
SCALE 1:100

G SECTION
SCALE 1:100

BAR BENDING DIAGRAM

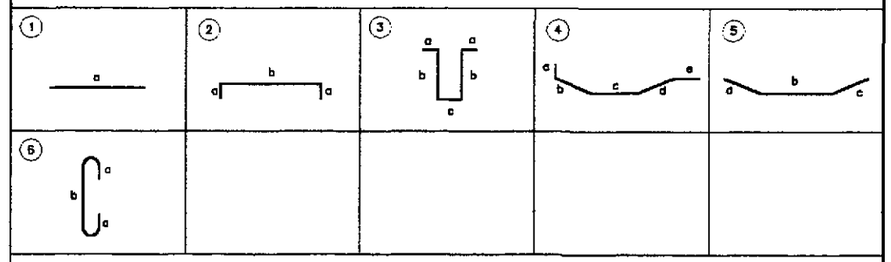

SCHEDULE OF REINFORCEMENT

LOCATION	BAR MARK	SIZE (mm)	BEND TYPE	DIMENSION(mm) OUT TO OUT a	b	c	d	e	f	LENGTH (mm)	NO. REQ'D.	UNIT WEIGHT (kg/m)	WEIGHT (Kg) GRADE 60	GRADE 40
B15 to B16	S1	16	str	4500						4500	88	1.579		625.28
	S1a	16	str	3850						3850	84	1.579		510.65
	S2	16	str	4500						4500	88	1.579		625.28
	S2a	16	str	3850						3850	84	1.579		510.65
	S3	12	2	9550	125					9800	112	0.818		897.84
	S4	12	5	150	1875	595	2050	150		4820	224	0.818		883.18
	S5	12	str	5835						5835	112	0.818		534.58
	S6	12	6	125	380 (max)					541	2128	0.818		941.72
					182 (min)									
	L1	25	str	5200						5200	92	3.854	1843.75	
	L1a	25	str	4200						4200	88	3.854	1424.44	
	L2	25	str	5200						5200	92	3.854	1843.75	
	L2a	25	str	4200						4200	88	3.854	1424.44	
	L3	16	2	400	5310 (max)					6110	112	1.579		1060.54
					5225 (min)									
	L4	16	2	400	5225 (max)					6025	112	1.579		1065.51
					5085 (min)									
	L5	12	6	250	500					1000	1008	0.818		824.54
	W1	16	str	4500						4500	96	1.579		682.13
	W1a	16	str	3850						3850	96	1.579		583.60
	W1b	16	str	6800						6800	4	1.579		42.95
	W2	20	3	300	3025 (max)	500 (max)				6425	224	2.466	3549.07	
					2425 (min)	250 (min)								
	W3	12	5	250	1740	250				2240	112	0.818		205.22
	W4	12	6	250	400					900	896	0.818		659.64
										WEIGHT FOR GRADE 60 =			10085.45	
										WEIGHT FOR GRADE 40 =				10673.31
										TOTAL WEIGHT FOR 4 PIERS :				
										TOTAL WEIGHT FOR GRADE 60 =			40341.80	
										TOTAL WEIGHT FOR GRADE 40 =				42693.22

THE REINFORCEMENT SHOWN ON THIS TABLE IS FOR REFERENCE ONLY. THE CONTRACTOR SHOULD CHECK AND VERIFY ALL DIMENSIONS, SIZES AND QUANTITIES OF REINFORCEMENT.

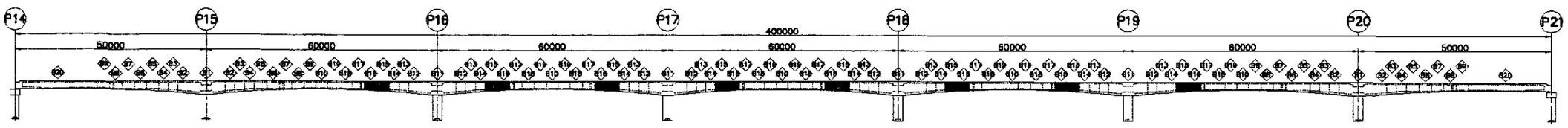

1 SLAB REINFORCEMENT DETAILS
SCALE AS SHOWN

JICA
JAPAN INTERNATIONAL COOPERATION AGENCY
KEI KATAHIRA & ENGINEERS INTERNATIONAL
YEC YACHIYO ENGINEERING CO., LTD.

	DATE	SIGNATURE
DESIGNED	9/21/02	
CHECKED	9/23/02	J. F. SANTOS
SUBMITTED	10/14/02	TEAM LEADER

REPUBLIC OF THE PHILIPPINES
DEPARTMENT OF PUBLIC WORKS AND HIGHWAYS

PMO	BUREAU OF DESIGN		OFFICE OF THE SECRETARY	
Submitted By:	Reviewed By:	Recommended By:	Recommended By: (See cover sheet for Signature)	Approved By: (See cover sheet for Signature/Approval)
DANILO C. TRAJANO	ADRIANO M. DOROY	GILBERTO S. REYES	MANUEL M. BONDAN	SIMEON A. DATUMANONG
Project Director	Chief, Bridges Division	Director IV (OIC)	Undersecretary	Secretary

PROJECT AND LOCATION :
THE DETAILED DESIGN STUDY ON UPGRADING INTER-URBAN HIGHWAY SYSTEM ALONG THE PAN-PHILIPPINE HIGHWAY (Plaridel, Cabanatuan and San Jose Bypasses)
PLARIDEL BYPASS - CONTRACT PACKAGE III

SCALE : AS SHOWN
FULL SIZE A1

SHEET CONTENTS :
BRIDGE NO. 8 ANGAT RIVER BRIDGE
REINFORCEMENT DETAILS FOR SEGMENT-B15 TO B16 (2 OF 2)
(INITIAL STAGE)

SHEET NO. : B8M-40

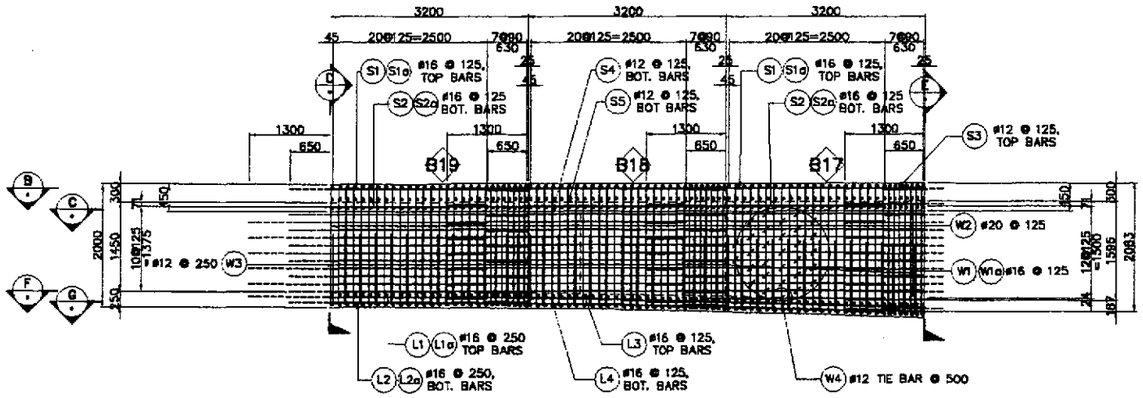

A SECTION
SCALE 1 : 100

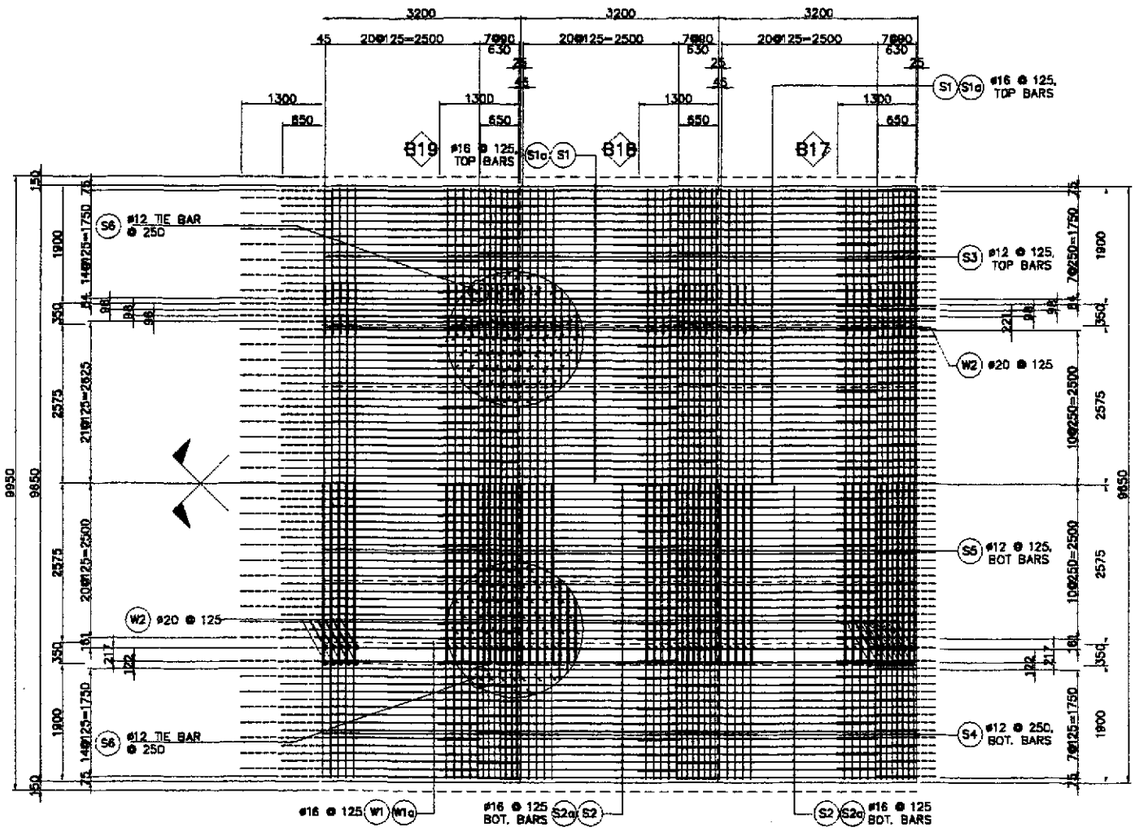

B SECTION
SCALE 1 : 100

C SECTION
SCALE 1 : 100

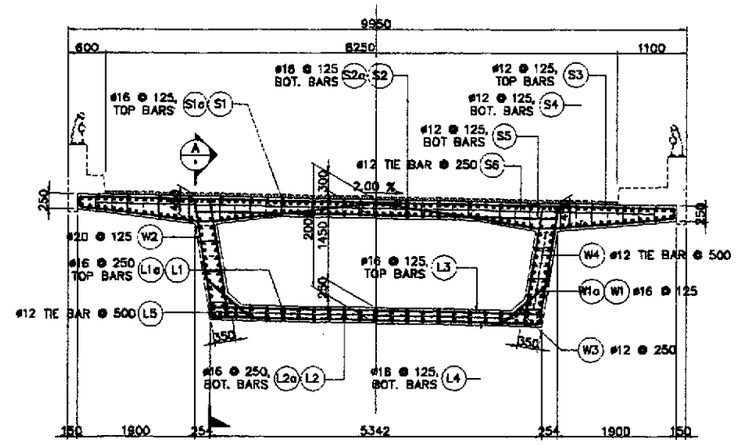

D SECTION
SCALE 1 : 100

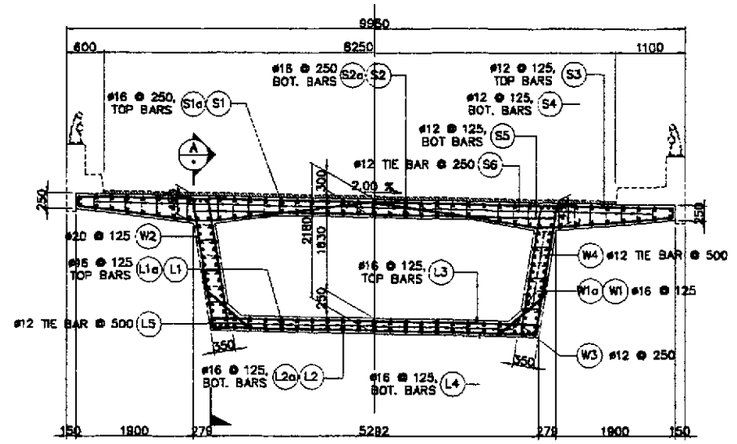

E SECTION
SCALE 1 : 100

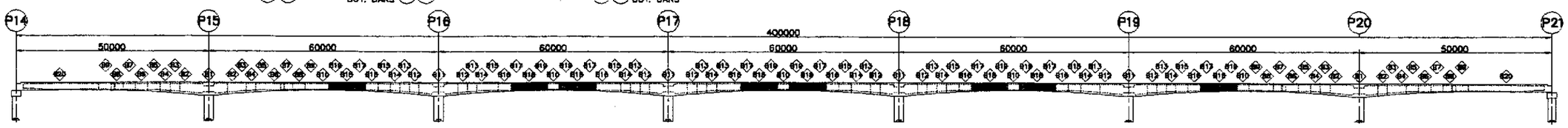

1 SLAB REINFORCEMENT DETAILS
SCALE AS SHOWN

JICA
JAPAN INTERNATIONAL COOPERATION AGENCY
KEI KATAHIRA & ENGINEERS INTERNATIONAL
YEC YACHIYO ENGINEERING CO., LTD.

	DATE	SIGNATURE
DESIGNED	9/21/02	M. S. KAWAI
CHECKED	9/23/02	J. Z. SANTOS
SUBMITTED	10/4/02	TEAM LEADER

REPUBLIC OF THE PHILIPPINES
DEPARTMENT OF PUBLIC WORKS AND HIGHWAYS

PUHL – PMO	BUREAU OF DESIGN		OFFICE OF THE SECRETARY	
Submitted By:	Reviewed By:	Recommended By:	Recommended By: (See cover sheet for Signature)	Approved By: (See cover sheet for Signature/Approval)
DANILO C. TRAJANO	ADRIANO M. DOROY	GILBERTO S. REYES	MANUEL M. BONDAN	SIMEON A. DATUMANONG
Project Director	Chief, Bridges Division	Director IV (OIC)	Undersecretary	Secretary

PROJECT AND LOCATION :
THE DETAILED DESIGN STUDY ON UPGRADING INTER-URBAN HIGHWAY SYSTEM ALONG THE PAN-PHILIPPINE HIGHWAY (Plaridel, Cabanatuan and San Jose Bypasses)
PLARIDEL BYPASS - CONTRACT PACKAGE III

SCALE : AS SHOWN
FULL SIZE A1

SHEET CONTENTS :
BRIDGE NO. 8 ANGAT RIVER BRIDGE
REINFORCEMENT DETAILS FOR SEGMENT-B17 TO B19 (1 OF 2)
(INITIAL STAGE)

SHEET NO. : B8M-41

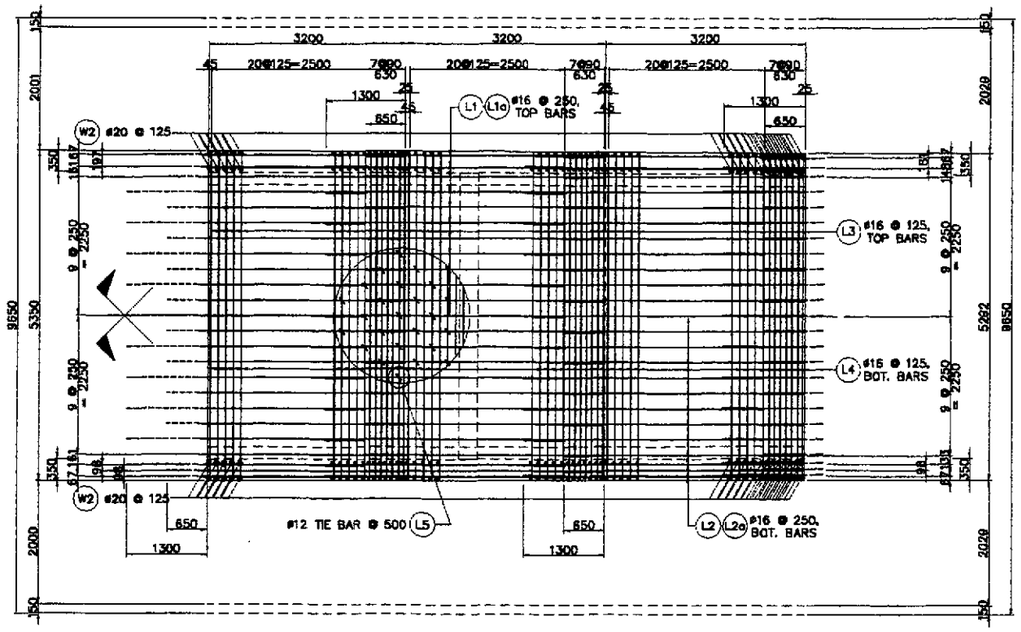

F SECTION 1:100 SCALE -

G SECTION 1:100 SCALE -

BAR BENDING DIAGRAM

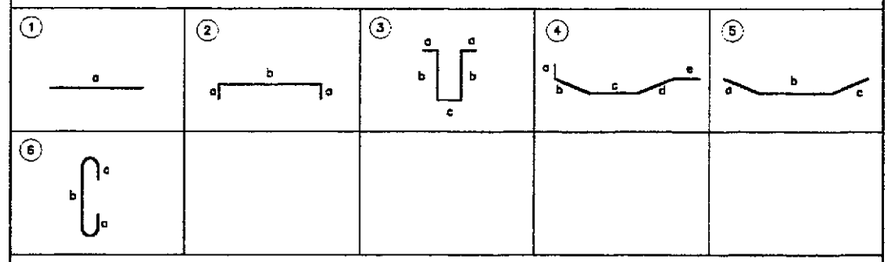

SCHEDULE OF REINFORCEMENT

LOCATION	BAR MARK	SIZE (mm)	BEND TYPE	DIMENSION(mm) OUT TO OUT a	b	c	d	e	f	LENGTH (mm)	NO. REQ'D.	UNIT WEIGHT (kg/m)	WEIGHT (Kg) GRADE 60	GRADE 40
B17 TO B19	S1	16	str	4500						4500	240	1.579		1705.32
	S1a	16	str	3850						3850	234	1.579		1422.52
	S2	16	str	4500						4500	228	1.579		1620.05
	S2a	16	str	3850						3850	222	1.579		1349.57
	S3	12	2	9550	125					9800	168	0.818		1346.76
	S4	12	5	150	1875	595	2050	150		4820	336	0.818		1324.77
	S5	12	str	5835						5835	168	0.818		801.67
	S6	16	6	125	390 (max)					541	3192	1.579		2726.73
					182 (min)									
	L1	16	str	4500						4500	72	1.579		511.60
	L1a	16	str	3850						3850	66	1.579		401.22
	L2	16	str	4500						4500	72	1.579		511.60
	L2a	16	str	3850						3850	66	1.579		401.22
	L3	16	2	250	5335 (max)					5835	168	1.579		1547.86
					5255 (min)									
	L4	16	2	250	5285 (max)					5765	168	1.579		1529.29
					5210 (min)									
	L5	12	6	250	500					1000	1512	0.818		1238.82
	W1	16	str	4500						4500	132	1.579		937.83
	W1a	16	str	3850						3850	132	1.579		802.45
	W2	20	3	300	2090 (max)	250				4840	336	2.466	4010.31	
					1900 (min)									
	W3	12	5	250	1740	250				2240	168	0.818		307.83
	W4	12	6	250	250					750	1008	0.818		618.41

WEIGHT FOR GRADE 60 = 4010.31
WEIGHT FOR GRADE 40 = 21103.81
TOTAL WEIGHT FOR 4 PIERS :
TOTAL WEIGHT FOR GRADE 60 = 16041.23
TOTAL WEIGHT FOR GRADE 40 = 84415.25

THE REINFORCEMENT SHOWN ON THIS TABLE IS FOR REFERENCE ONLY. THE CONTRACTOR SHOULD CHECK AND VERIFY ALL DIMENSIONS, SIZES AND QUANTITIES OF REINFORCEMENT.

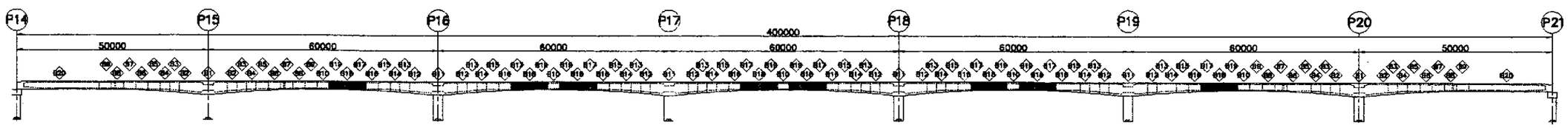

1 SLAB REINFORCEMENT DETAILS
SCALE - AS SHOWN

JICA
JAPAN INTERNATIONAL COOPERATION AGENCY
KEI KATAHIRA & ENGINEERS INTERNATIONAL
YEC YACHIYO ENGINEERING CO., LTD.

	DATE	SIGNATURE
DESIGNED	9/21/02	V. S. NAVAL
CHECKED	9/23/02	J. C. SANTOS
SUBMITTED	10/14/02	TEAM LEADER

REPUBLIC OF THE PHILIPPINES
DEPARTMENT OF PUBLIC WORKS AND HIGHWAYS

FUNL – PMO	BUREAU OF DESIGN		OFFICE OF THE SECRETARY	
Submitted By:	Reviewed By:	Recommended By:	Recommended By: (See cover sheet for Signature)	Approved By: (See cover sheet for Signature/Approval)
DANILO C. TRAJANO	ADRIANO M. DOROY	GILBERTO S. REYES	MANUEL M. BONDAD	SIMEON A. DATUMANONG
Project Director	Chief, Bridges Division	Director IV (OIC)	Undersecretary	Secretary

PROJECT AND LOCATION :
THE DETAILED DESIGN STUDY ON UPGRADING INTER-URBAN HIGHWAY SYSTEM ALONG THE PAN-PHILIPPINE HIGHWAY (Plaridel, Cabanatuan and San Jose Bypasses)
PLARIDEL BYPASS - CONTRACT PACKAGE III

SCALE : AS SHOWN
FULL SIZE A1

SHEET CONTENTS :
BRIDGE NO. 8 ANGAT RIVER BRIDGE
REINFORCEMENT DETAILS FOR SEGMENT-B17 TO B19 (2 OF 2)
(INITIAL STAGE)

SHEET NO. : B8M-42

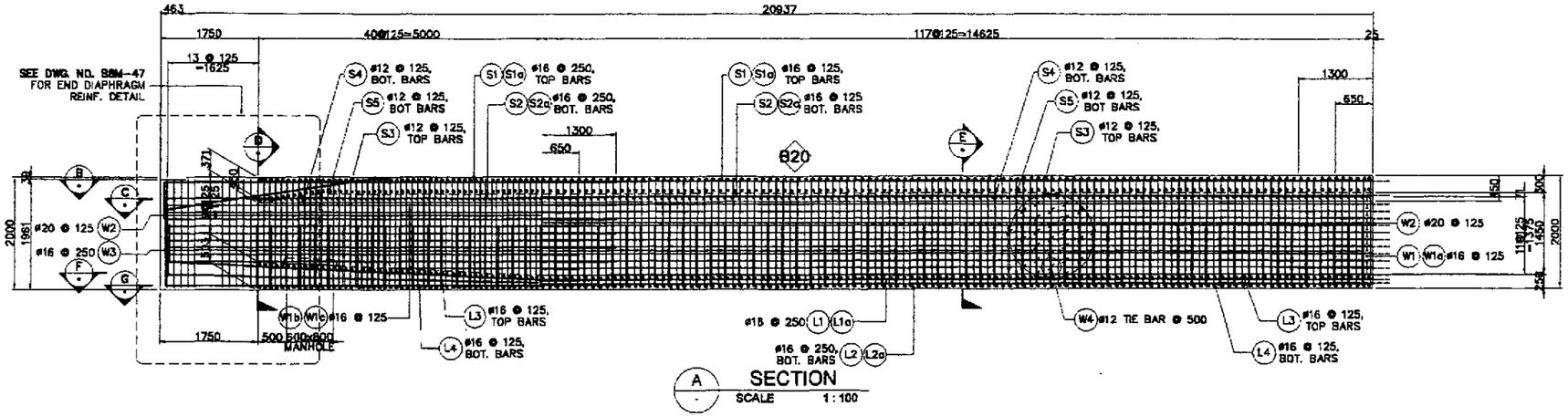

A SECTION
SCALE 1:100

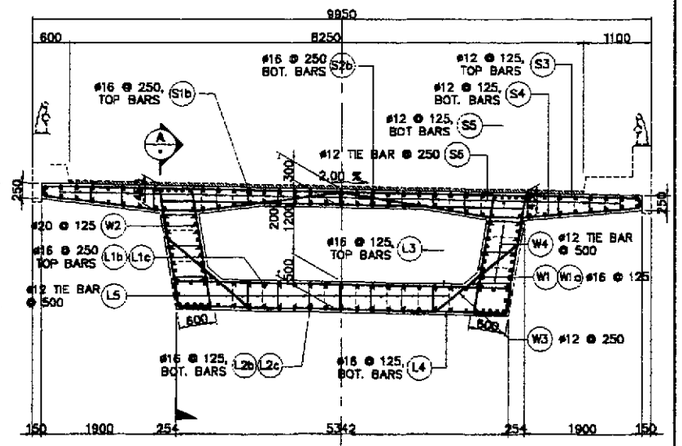

D SECTION
SCALE 1:100

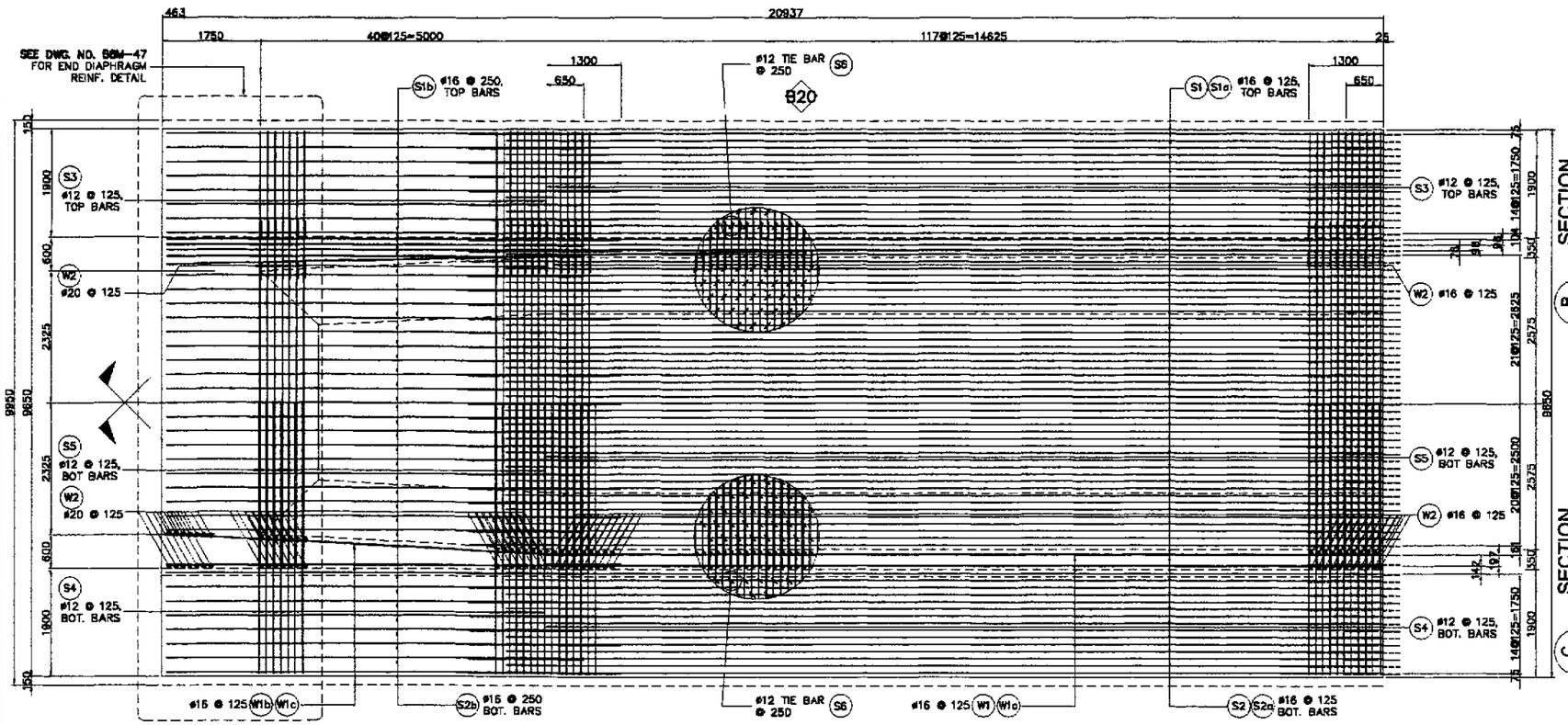

B SECTION
SCALE 1:100

C SECTION
SCALE 1:100

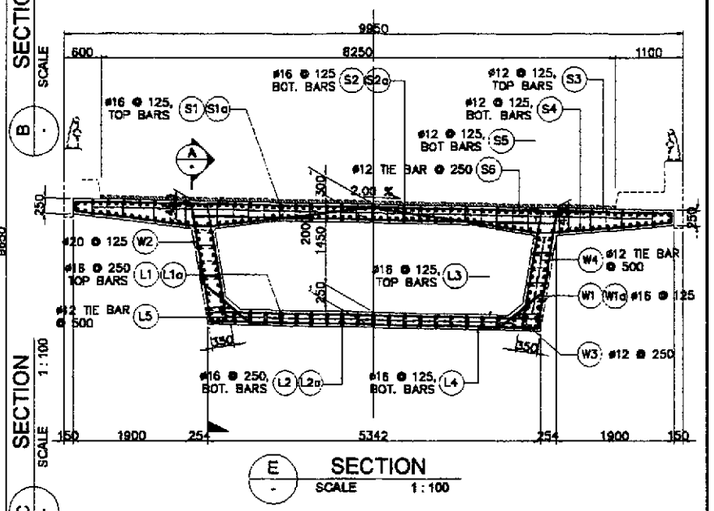

E SECTION
SCALE 1:100

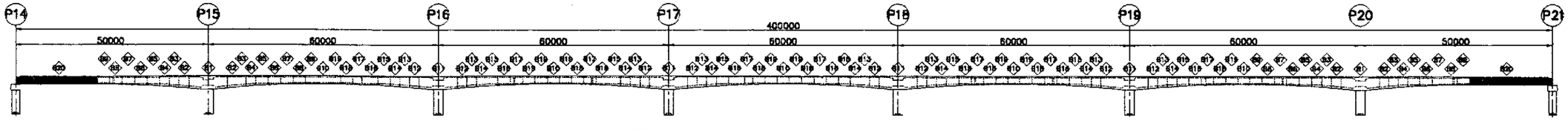

1 SLAB REINFORCEMENT DETAILS
SCALE AS SHOWN

JICA
JAPAN INTERNATIONAL COOPERATION AGENCY
KEI KATAHIRA & ENGINEERS INTERNATIONAL
YEO YACHIYO ENGINEERING CO., LTD.

	DATE	SIGNATURE
DESIGNED	9/21/02	N. S. NAVAL
CHECKED	9/23/02	J. E. SANTOS
SUBMITTED	10/04/02	TEAM LEADER

REPUBLIC OF THE PHILIPPINES
DEPARTMENT OF PUBLIC WORKS AND HIGHWAYS

FUHL – PMO	BUREAU OF DESIGN		OFFICE OF THE SECRETARY	
Submitted By:	Reviewed By:	Recommended By:	Recommended By: (See cover sheet for Signature)	Approved By: (See cover sheet for Signature/Approval)
DANILO C. TRAJANO	ADRIANO M. DORDY	GILBERTO S. REYES	MANUEL M. BONDAN	SIMEON A. DATUMANONG
Project Director	Chief, Bridges Division	Director IV (OIC)	Undersecretary	Secretary

PROJECT AND LOCATION :
THE DETAILED DESIGN STUDY ON UPGRADING INTER-URBAN HIGHWAY SYSTEM ALONG THE PAN-PHILIPPINE HIGHWAY (Plaridel, Cabanatuan and San Jose Bypasses)
PLARIDEL BYPASS - CONTRACT PACKAGE III

SCALE : AS SHOWN
FULL SIZE A1

SHEET CONTENTS :
BRIDGE NO. 8 ANGAT RIVER BRIDGE
REINFORCEMENT DETAILS FOR END CLOSURE-B20 (1 OF 2)
(INITIAL STAGE)

SHEET NO. : B8M-43

BAR BENDING DIAGRAM

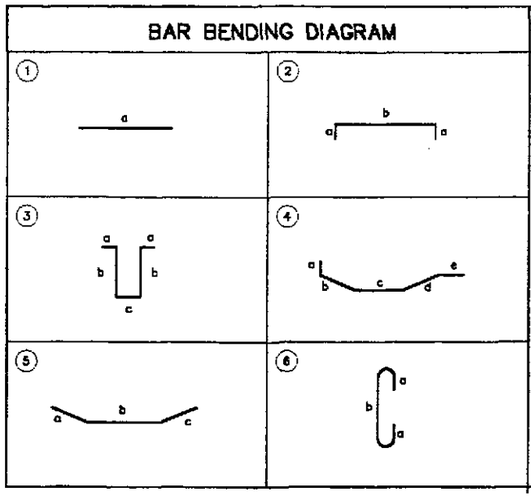

SCHEDULE OF REINFORCEMENT

LOCATION	BAR MARK	SIZE (mm)	BEND TYPE	DIMENSION(mm) OUT TO OUT a	b	c	d	e	f	LENGTH (mm)	NO. REQ'D.	UNIT WEIGHT (kg/m)	WEIGHT (Kg) GRADE 60	GRADE 40
B20	S1	16	str	16000						16000	40	1.579		1010.56
	S1a	16	str	15350						15350	39	1.579		945.27
	S1b	16	str	5500						5500	45	1.579		390.80
	S2	16	str	16000						16000	40	1.579		1010.56
	S2a	16	str	15350						15350	39	1.579		945.27
	S2b	16	1	5500						5500	39	1.579		338.70
	S3	12	2	9550	125					9800	160	0.818		1282.62
	S4	12	5	150	1875	595	2050	150		4820	160	0.818		630.84
	S5	12	str	5835						5835	160	0.818		763.68
	S6	16	6	125	380 (max)					541	3002	1.579		2564.43
					182 (min)									
	L1	16	str	16000						16000	12	1.579		303.17
	L1a	16	str	15350						15350	11	1.579		266.61
	L1b	16	1	250	6000					6250	12	1.579		118.43
	L1c	16	1	250	6000					6250	11	1.579		108.56
	L2	16	str	16000						16000	12	1.579		303.17
	L2a	16	str	15350						15350	11	1.579		266.61
	L2b	16	1	250	6000					6250	12	1.579		118.43
	L2c	16	1	250	6000					6250	11	1.579		108.56
	L3	16	2	250	5275 (max)					5775	160	1.579		1459.00
					5250 (min)									

LOCATION	BAR MARK	SIZE (mm)	BEND TYPE	DIMENSION(mm) OUT TO OUT a	b	c	d	e	f	LENGTH (mm)	NO. REQ'D.	UNIT WEIGHT (kg/m)	WEIGHT (Kg) GRADE 60	GRADE 40
B20	L4	16	2	250	5275 (max)					5775	160	1.579		1459.00
					5250 (min)									
	L5	12	6	100	150					350	1062	0.818		304.05
	L5b	12	6	250	400 (max)					775	369	0.818		233.93
					150 (min)									
	W1	16	str	16000						16000	22	1.579		555.81
	W1a	16	str	15350						15350	22	1.579		533.23
	W2	20	3	300	1900	250				4650	235	2.466	2706.19	
	W2a	16	3	300	1900	550 (max)				4800	82	1.579		621.49
						250 (min)								
	W3	12	5	250	1740	250				2240	158	0.818		289.51
	W4	12	5	250	250					750	708	0.818		434.36
	TOTAL WEIGHT FOR GRADE 60 =												2706.19	
	TOTAL WEIGHT FOR GRADE 40 =													17368.62
	TOTAL WEIGHT FOR 2 SIDE SPANS :													
	TOTAL WEIGHT FOR GRADE 60 =												5412.38	
	TOTAL WEIGHT FOR GRADE 40 =													34733.25

THE REINFORCEMENT SHOWN ON THIS TABLE IS FOR REFERENCE ONLY. THE CONTRACTOR SHOULD CHECK AND VERIFY ALL DIMENSIONS, SIZES AND QUANTITIES OF REINFORCEMENT.

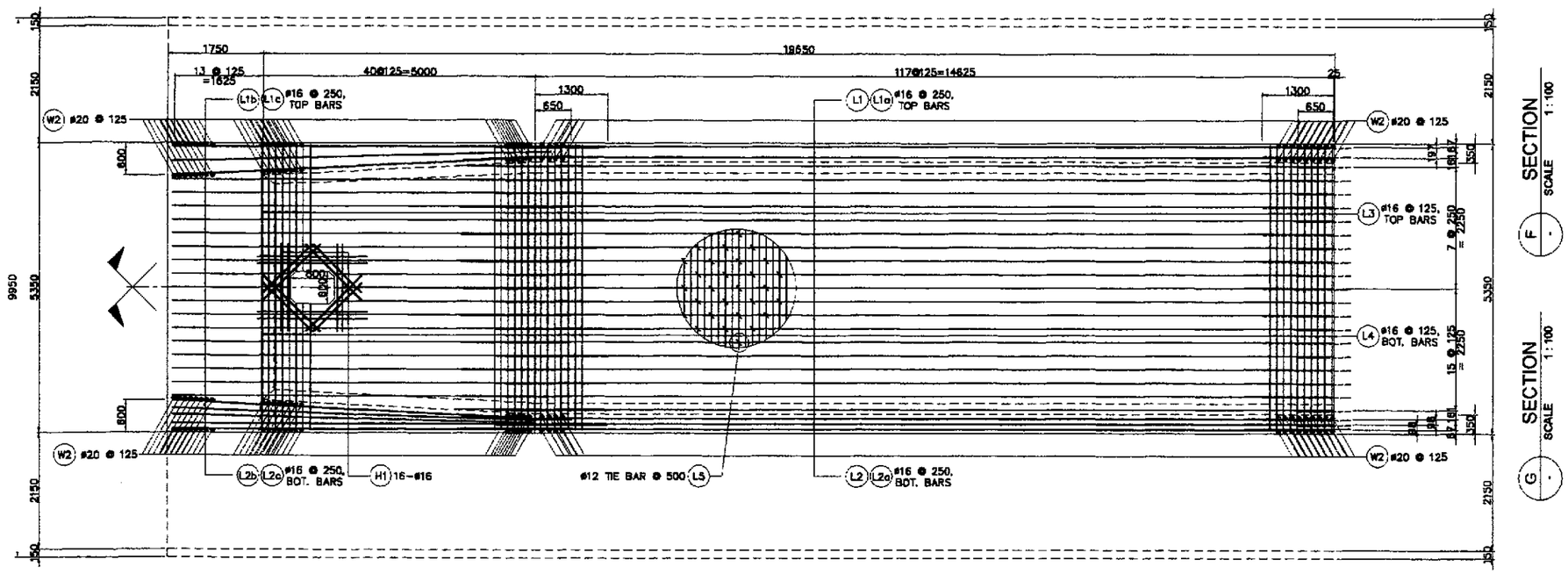

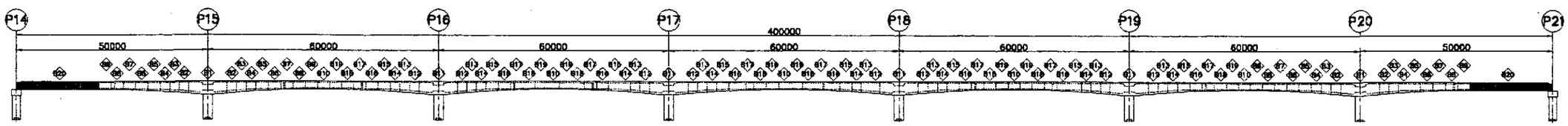

1 SLAB REINFORCEMENT DETAILS
SCALE AS SHOWN

JICA
JAPAN INTERNATIONAL COOPERATION AGENCY
KEI KATAHIRA & ENGINEERS INTERNATIONAL
YEC YACHIYO ENGINEERING CO., LTD.

	DATE	SIGNATURE
DESIGNED	9/21/02	W. S. NAVAL
CHECKED	9/23/02	J. C. SANTOS
SUBMITTED	10/14/02	TEAM LEADER

REPUBLIC OF THE PHILIPPINES
DEPARTMENT OF PUBLIC WORKS AND HIGHWAYS

P.H.L. – PMO	BUREAU OF DESIGN		OFFICE OF THE SECRETARY	
Submitted By:	Reviewed By:	Recommended By:	Recommended By: (See cover sheet for Signature)	Approved By: (See cover sheet for Signature/Approval)
DANILO C. TRAJANO	ADRIANO M. DOROY	GILBERTO S. REYES	MANUEL M. BONDAN	SIMEON A. DATUMANONG
Project Director	Chief, Bridges Division	Director IV (OIC)	Undersecretary	Secretary

PROJECT AND LOCATION :
THE DETAILED DESIGN STUDY ON UPGRADING INTER-URBAN HIGHWAY SYSTEM ALONG THE PAN-PHILIPPINE HIGHWAY (Plaridel, Cabanatuan and San Jose Bypasses)
PLARIDEL BYPASS - CONTRACT PACKAGE III

SCALE : AS SHOWN
FULL SIZE A1

SHEET CONTENTS :
BRIDGE NO. 8 ANGAT RIVER BRIDGE
REINFORCEMENT DETAILS FOR END CLOSURE-B20 (2 OF 2)
(INITIAL STAGE)

SHEET NO. : B8M-44

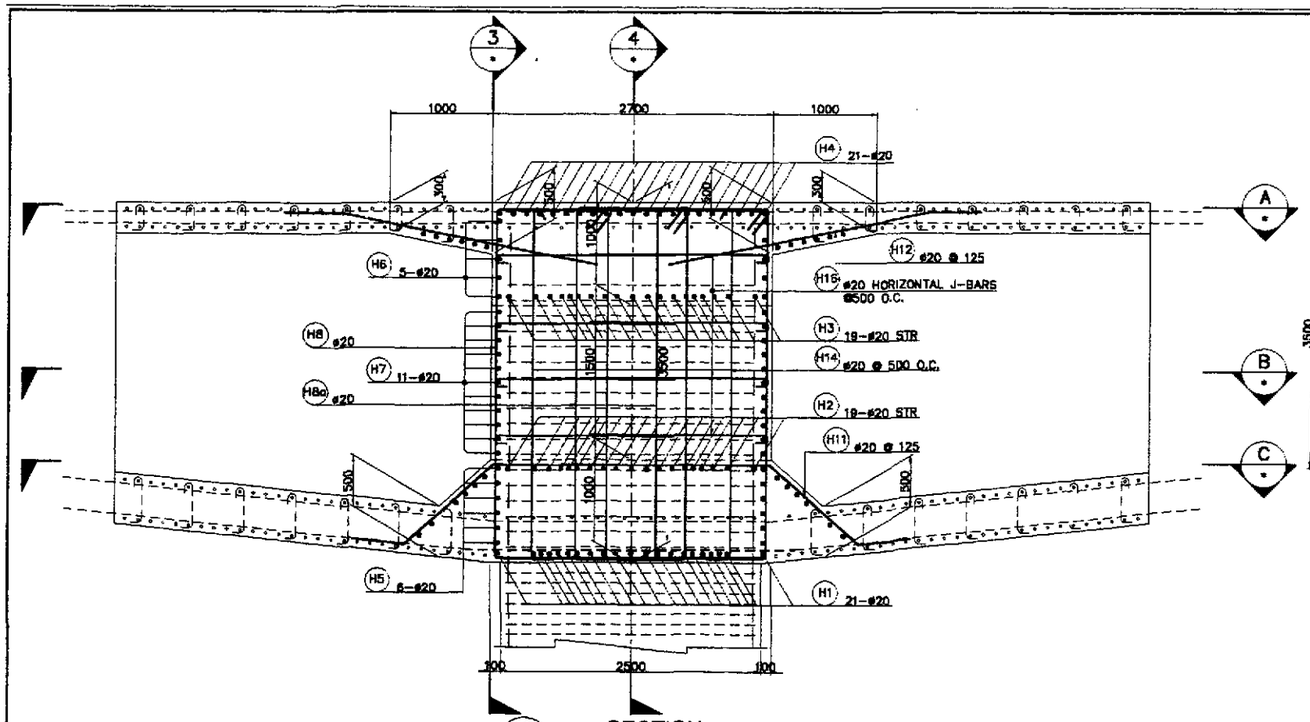

1 SECTION
SCALE 1:30

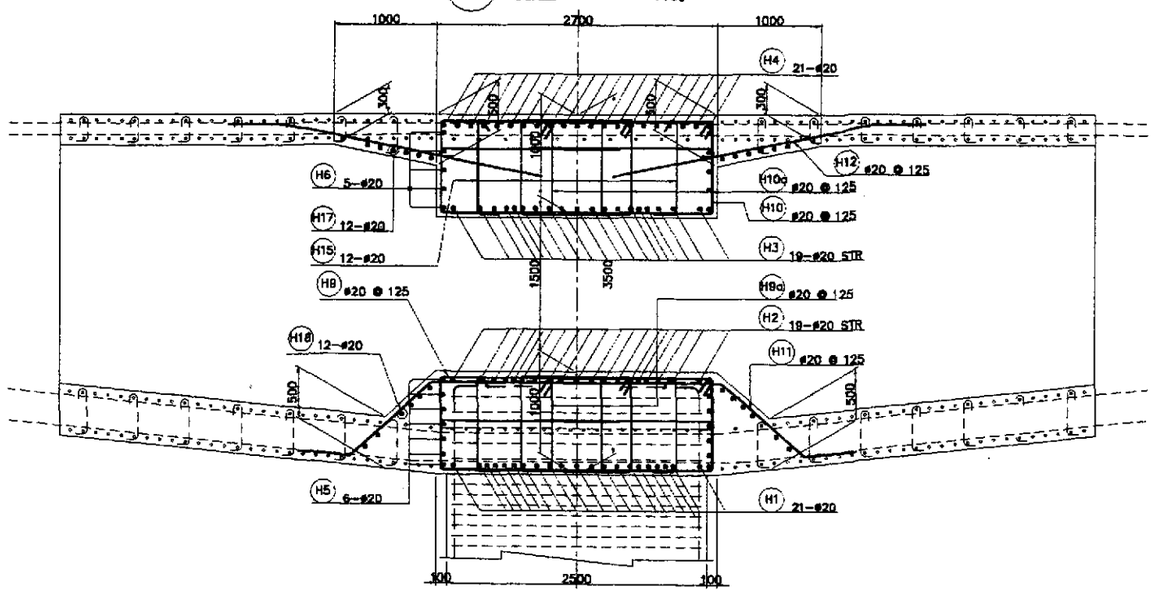

2 SECTION
SCALE 1:30

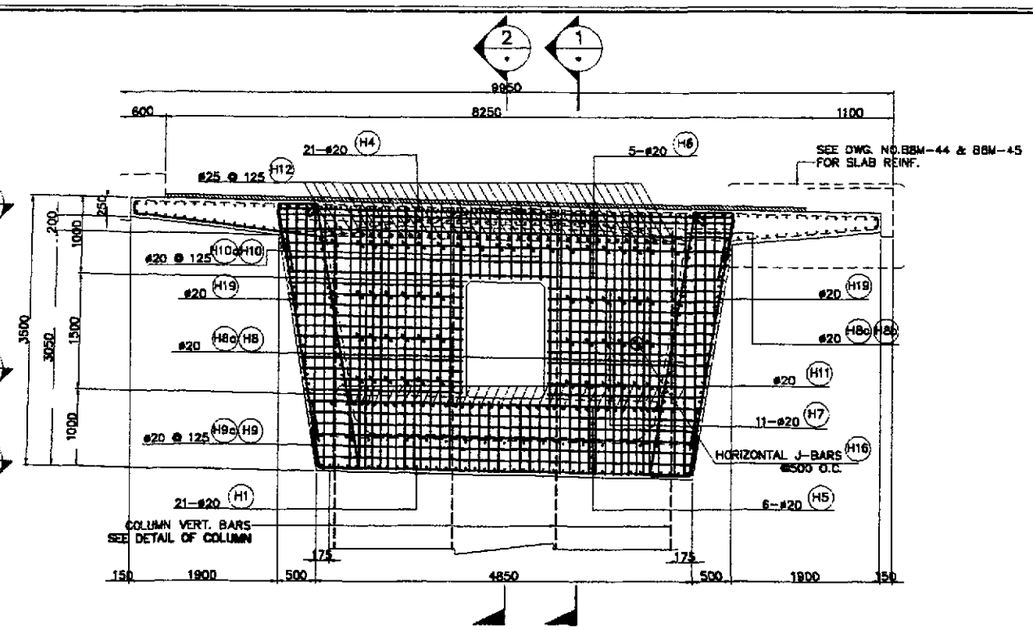

3 SECTION
SCALE 1:40

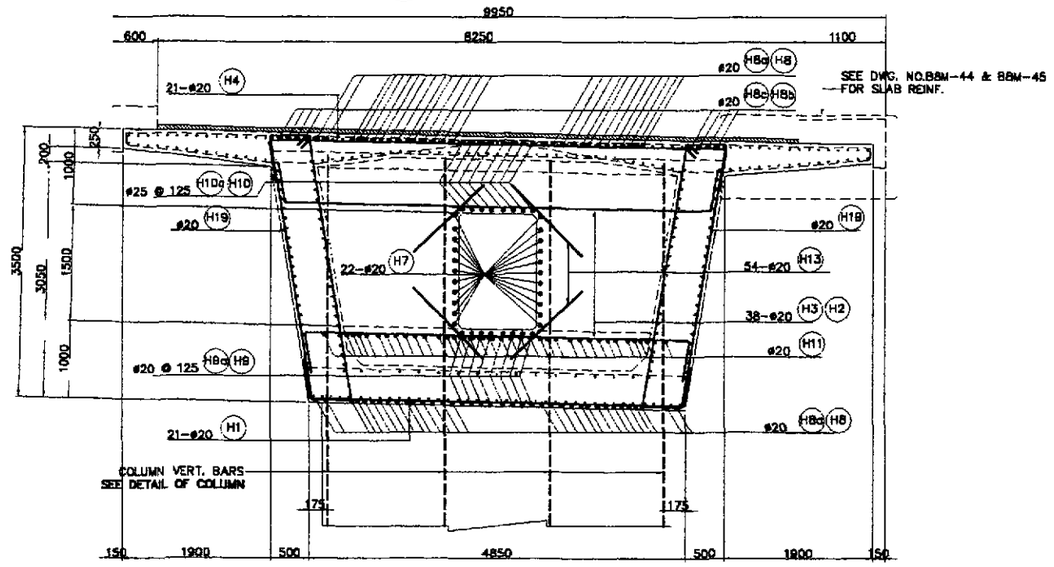

4 SECTION
SCALE 1:40

1 REINFORCEMENT DETAILS AT PIER HEAD (P15 TO P20)
SCALE AS SHOWN

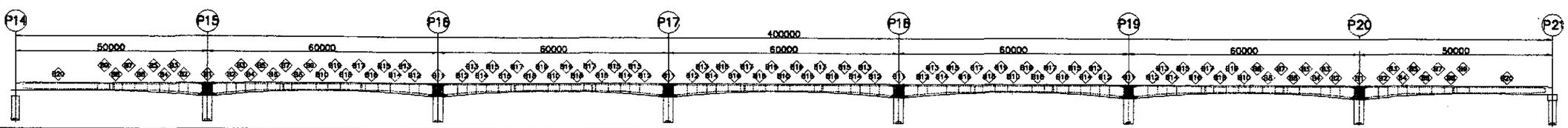

JICA JAPAN INTERNATIONAL COOPERATION AGENCY			
KEI KATAHIRA & ENGINEERS INTERNATIONAL / YEC YACHIYO ENGINEERING CO., LTD.			
	DATE	SIGNATURE	
DESIGNED	9/21/02	M. S. NAGAI	
CHECKED	9/25/02	J. C. SANTOS	
SUBMITTED	10/9/02	H. KUSUDA TEAM LEADER	

REPUBLIC OF THE PHILIPPINES
DEPARTMENT OF PUBLIC WORKS AND HIGHWAYS

PUHL – PMO	BUREAU OF DESIGN		OFFICE OF THE SECRETARY	
Submitted By:	Reviewed By:	Recommended By:	Recommended By: (See cover sheet for Signature)	Approved By: (See cover sheet for Signature/Approval)
DANILO C. TRAJANO, Project Director	ADRIANO M. DOROY, Chief, Bridges Division	GILBERTO S. REYES, Director IV (OIC)	MANUEL M. BONDAN, Undersecretary	SIMEON A. DATUMANONG, Secretary

PROJECT AND LOCATION :	SCALE :	SHEET CONTENTS :	SHEET NO. :
THE DETAILED DESIGN STUDY ON UPGRADING INTER-URBAN HIGHWAY SYSTEM ALONG THE PAN-PHILIPPINE HIGHWAY (Plaridel, Cabanatuan and San Jose Bypasses)	AS SHOWN	BRIDGE NO. 8 ANGAT RIVER BRIDGE REINFORCEMENT DETAILS AT PIER HEAD (P15 TO P20) - 1 OF 2 (INITIAL STAGE)	B8M-45
PLARIDEL BYPASS - CONTRACT PACKAGE III	FULL SIZE A1		

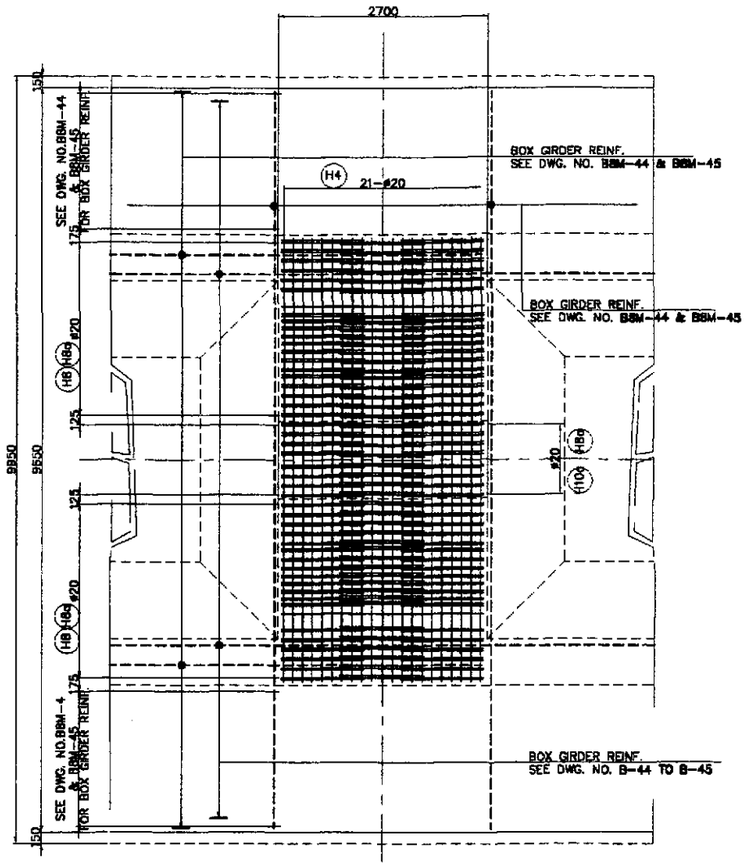

A SECTION
SCALE 1:40

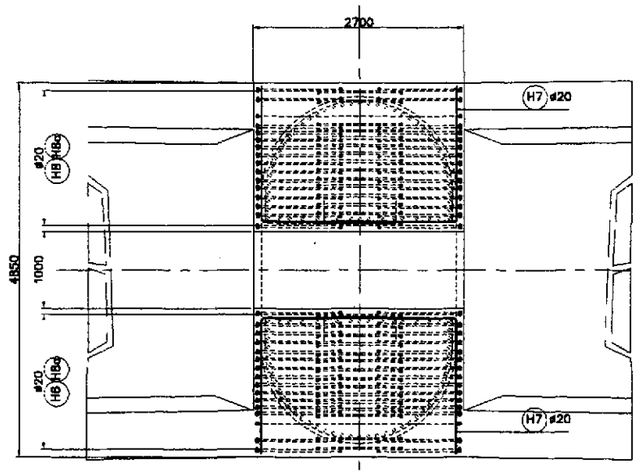

B SECTION
SCALE 1:40

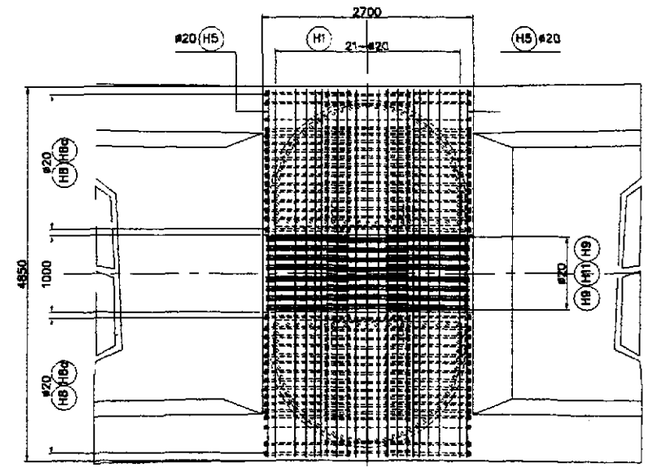

C SECTION
SCALE 1:40

BAR BENDING DIAGRAM

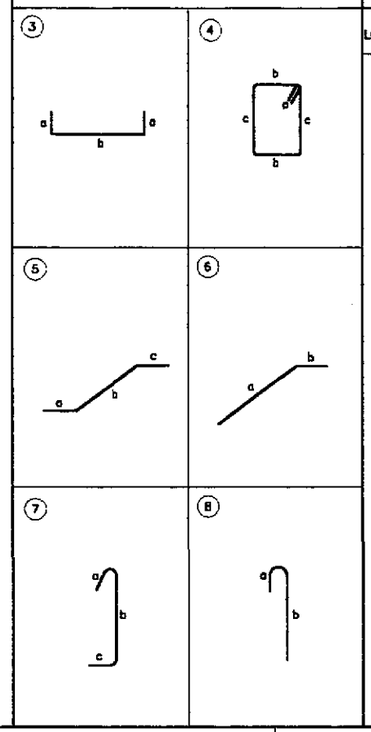

SCHEDULE OF REINFORCEMENT

LOCATION	BAR MARK	SIZE (mm)	BEND TYPE	DIMENSION(mm) OUT TO OUT a	b	c	d	e	f	LENGTH (mm)	NO. REQ'D.	UNIT WEIGHT (kg/m)	WEIGHT (Kg) GRADE 60	GRADE 40	REMARKS
PIER (P15 TO P20)	H1	20	3	500	5920					6920	21	2.466	358.36		Grade 60
	H2	20	3	500	5570					6570	19	2.466	307.83		Grade 60
	H3	20	3	500	5100					6100	19	2.466	285.81		Grade 60
	H4	20	3	500	4750					5750	21	2.466	297.77		Grade 60
	H5	20	3	1300	4710 (max)					7200	10	2.466	177.55		Grade 60
					4480 (min)										
	H6	20	3	1300	5500 (max)					7970	10	2.466	196.54		Grade 60
					5240 (min)										
	H7	20	3	1300	2040 (max)					4525	22	2.466	245.49		Grade 60
					1810 (min)										
	H8	20	4	200	1165	3400				9530	60	2.466	1410.06		Grade 60
	H8a	20	4	200	1245	3400				9690	30	2.466	716.87		Grade 60
	H8b	20	4	200	1165	3000 (max)				8730	16	2.466	344.45		Grade 60
						800 (min)									
	H8c	20	4	200	1245	3000 (max)				8890	8	2.466	175.38		Grade 60
						800 (min)									
	H9	20	4	200	2500	850				7300	8	2.466	144.01		Grade 60
	H9a	20	4	200	460	850				3020	24	2.466	178.74		Grade 60
	H10	20	4	200	2500	980				7560	8	2.466	149.14		Grade 60
	H10a	20	4	200	460	980				3280	24	2.466	194.12		Grade 60
	H11	20	5	500	1130	1300				4560	78	2.466	877.11		Grade 60
	H12	20	6	2625	500					3125	78	2.466	601.09		Grade 60
	H13	20	str	1300						1300	56	2.466	179.52		Grade 60
	H14	20	7	300	3400	250				3950	16	2.466	155.85		Grade 60
	H15	20	7	300	900	250				1450	8	2.466	28.61		Grade 60
	H16	20	8	250	1800					2050	92	2.466	465.09		Grade 60
	H17	20	str	5750						5750	12	2.466	170.15		Grade 60
	H18	20	str	4750						4750	12	2.466	140.56		Grade 60
	H19	20	4	250	500	3400				6300	44	2.466	900.58		Grade 60
										TOTAL WEIGHT FOR GRADE 60		=	8700.68		
										TOTAL WEIGHT FOR GRADE 40		=			
										TOTAL WEIGHT FOR 6 PIERS					
										GRADE 60		=	52204.13		

THE REINFORCEMENT SHOWN ON THIS TABLE IS FOR REFERENCE ONLY. THE CONTRACTOR SHOULD CHECK AND VERIFY ALL DIMENSIONS, SIZES AND QUANTITIES OF REINFORCEMENT.

JICA
JAPAN INTERNATIONAL COOPERATION AGENCY
KEI KATAHIRA & ENGINEERS INTERNATIONAL
YEC YACHIYO ENGINEERING CO., LTD.

	DATE	SIGNATURE
DESIGNED	9/21/02	M. S. RAMOS
CHECKED	9/23/02	J. C. SANTOS
SUBMITTED	10/14/02	TEAM LEADER

REPUBLIC OF THE PHILIPPINES
DEPARTMENT OF PUBLIC WORKS AND HIGHWAYS

PUHL – PMO	BUREAU OF DESIGN		OFFICE OF THE SECRETARY	
Submitted By:	Reviewed By:	Recommended By:	Recommended By: (See cover sheet for Signature)	Approved By: (See cover sheet for Signature/Approval)
DANILO C. TRAJANO	ADRIANO M. DOROY	GILBERTO S. REYES	MANUEL M. BONDAN	SIMEON A. DATUMANONG
Project Director	Chief, Bridges Division	Director IV (OIC)	Undersecretary	Secretary

PROJECT AND LOCATION :
THE DETAILED DESIGN STUDY ON UPGRADING INTER-URBAN HIGHWAY SYSTEM ALONG THE PAN-PHILIPPINE HIGHWAY (Plaridel, Cabanatuan and San Jose Bypasses)
PLARIDEL BYPASS - CONTRACT PACKAGE III

SCALE : AS SHOWN
FULL SIZE A1

SHEET CONTENTS :
BRIDGE NO. 8 ANGAT RIVER BRIDGE
REINFORCEMENT DETAILS AT PIER HEAD (P15 TO P20) - 2 OF 2
(INITIAL STAGE)

SHEET NO. : B8M-46

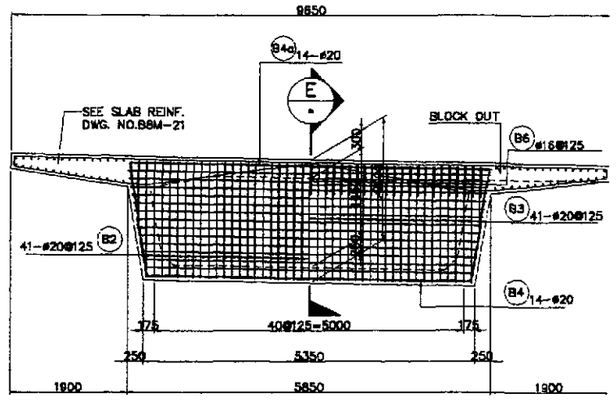

END DIAPHRAGM

A SECTION
SCALE 1:50

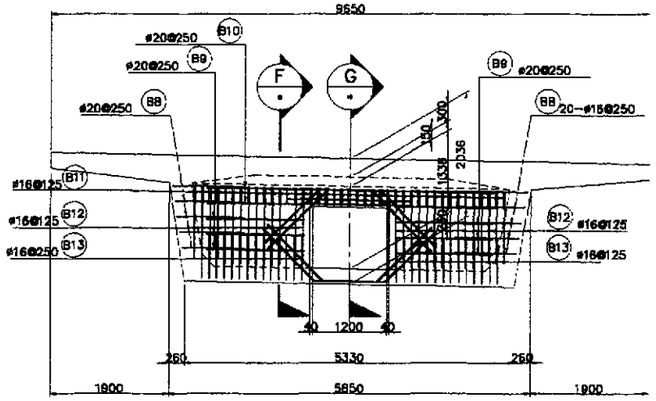

CROSS BEAM A-A

C SECTION
SCALE 1:50

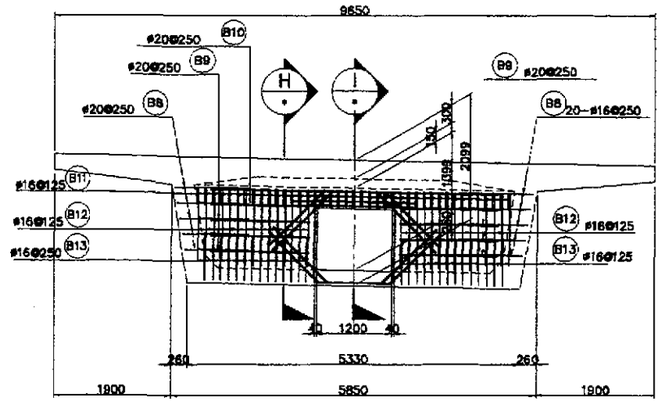

CROSS BEAM B-B

D SECTION
SCALE 1:50

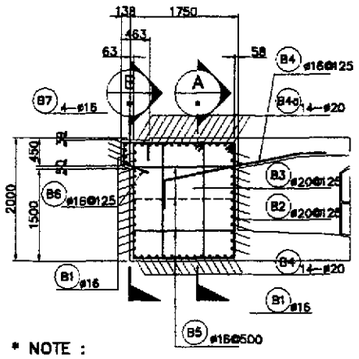

* NOTE :
1. SUPPLEMENTAL REINFORCEMENTS SHOULD BE PROVIDED FOR PRESTRESS ANCHORAGES AT DIAPHRAGM.

E SECTION
SCALE 1:50

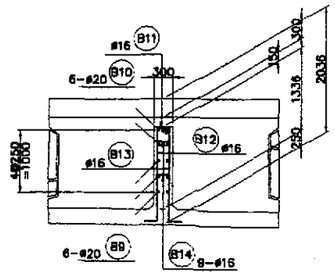

F SECTION
SCALE 1:50

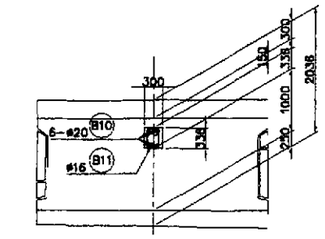

G SECTION
SCALE 1:50

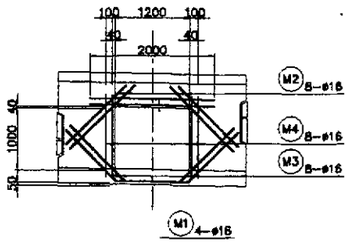

SUPPLEMENTAL REINFORCEMENT BAR DIAGRAM FOR MANHOLE

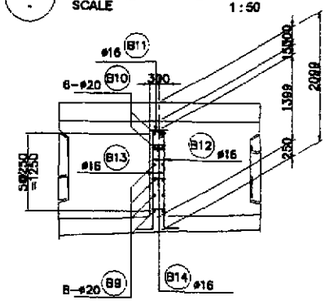

H SECTION
SCALE 1:50

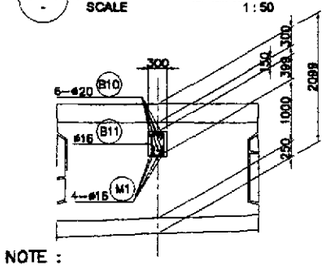

* NOTE :
1. SUPPLEMENTAL REINFORCEMENTS SHOULD BE PROVIDED FOR PRESTRESS ANCHORAGES AT DIAPHRAGM.

I SECTION
SCALE 1:50

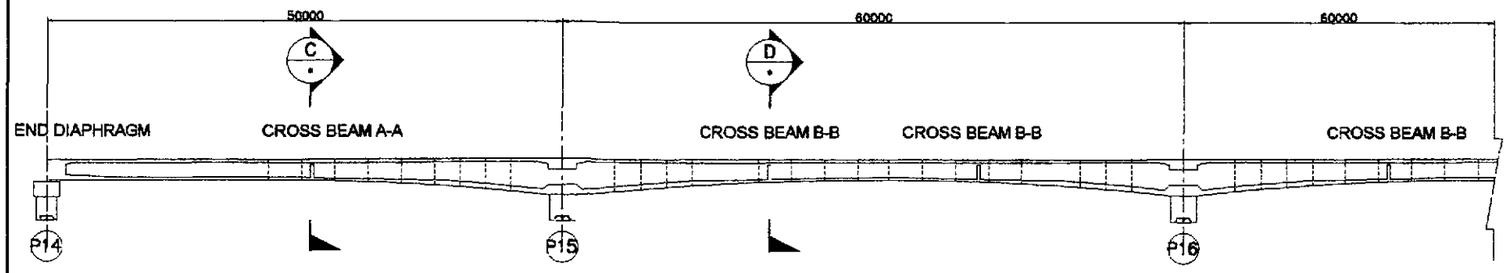

BAR BENDING DIAGRAM

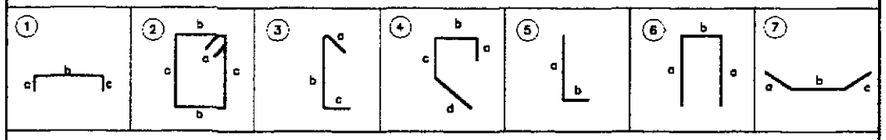

SCHEDULE OF REINFORCEMENT

LOCATION	BAR MARK	SIZE (mm)	BEND TYPE	DIMENSION(mm) OUT TO OUT a	b	c	d	e	f	LENGTH (mm)	NO. REQ'D.	UNIT WEIGHT (kg/m)	WEIGHT (kg)	REMARKS
END DIAPHRAGM	B1	16	1	1100	5750 (max)					7800	26	1.579	320.22	GRADE 275
					5450 (min)									
	B2	20	2	300	1650	1865				5765	41	2.466	582.88	GRADE 414
	B3	20	2	300	675	1865				3815	41	2.466	385.72	GRADE 414
	B4	20	1	930	5750					7610	14	2.466	252.73	GRADE 414
	B4a	20	1	930	5250					7110	14	2.466	245.47	GRADE 414
	B5	16	3	175	1650	175				2000	33	1.579	104.21	GRADE 275
	B6	16	4	300	480	420	470			1670	41	1.579	108.11	GRADE 275
	B7	16	2	250	5750					6250	4	1.579	39.48	GRADE 275
	WEIGHT FOR GRADE 275 = 572.02/WEIGHT FOR GRADE 414 = 1476.79													
	TOTAL WEIGHT FOR 2 END DIAPHRAGMS : TOTAL WEIGHT FOR GRADE 275 = 1144.05 / TOTAL WEIGHT FOR GRADE 414 = 2953.58													
CROSS BEAM A-A	B8	20	5	300	1100					1400	20	2.466	69.05	GRADE 414
	B9	20	5	300	2250					2550	12	2.466	75.46	GRADE 414
	B10	20	str	6000						6000	6	2.466	88.78	GRADE 414
	B11	16	2	150	200	300				1300	11	1.579	22.58	GRADE 275
	B12	20	6	1300	200					2800	30	2.466	207.14	GRADE 414
	B13	20	5	300	1100					1400	60	2.466	207.14	GRADE 414
	M1	16	str	2000						2000	4	1.579	12.63	GRADE 275
	M2	16	str	1200						1200	8	1.579	15.16	GRADE 275
	M3	16	7	1200	1200	1200				3600	8	1.579	45.48	GRADE 275
	M4	16	str	1500						1500	8	1.579	18.95	GRADE 275
	WEIGHT FOR GRADE 275 = 847.57/WEIGHT FOR GRADE 414 = 114.79													
	TOTAL WEIGHT FOR 2 CROSS-BEAM A-A : TOTAL WEIGHT FOR GRADE 275 = 1295.14 / TOTAL WEIGHT FOR GRADE 414 = 229.58													
CROSS BEAM B-B	B8	20	5	300	1100					1400	20	2.466	69.05	GRADE 414
	B9	20	5	300	2250					2550	12	2.466	75.46	GRADE 414
	B10	20	str	6000						6000	6	2.466	88.78	GRADE 414
	B11	16	2	150	200	300				1300	11	1.579	22.58	GRADE 275
	B12	20	6	1300	200					2800	30	2.466	207.14	GRADE 414
	B13	20	5	300	1100					1400	60	2.466	207.14	GRADE 414
	M1	16	str	2000						2000	4	1.579	12.63	GRADE 275
	M2	16	str	1200						1200	8	1.579	15.16	GRADE 275
	M3	16	7	1200	1200	1200				3600	8	1.579	45.48	GRADE 275
	M4	16	str	1500						1500	8	1.579	18.95	GRADE 275
	WEIGHT FOR GRADE 275 = 847.57/WEIGHT FOR GRADE 414 = 114.79													
	TOTAL WEIGHT FOR 10 CROSS-BEAM B-B : TOTAL WEIGHT FOR GRADE 275 = 8475.72 / TOTAL WEIGHT FOR GRADE 414 = 1147.93													

THE REINFORCEMENT SHOWN ON THIS TABLE IS FOR REFERENCE ONLY. THE CONTRACTOR SHOULD CHECK AND VERIFY ALL DIMENSIONS, SIZES AND QUANTITIES OF REINFORCEMENT.

JICA
JAPAN INTERNATIONAL COOPERATION AGENCY
KEI KATAHIRA & ENGINEERS INTERNATIONAL
YEC YACHIYO ENGINEERING CO., LTD.

	DATE	SIGNATURE
DESIGNED	9/21/02	M. S. [illegible]
CHECKED	9/23/02	J. G. SANTOS
SUBMITTED	10/4/02	[illegible] TEAM LEADER

REPUBLIC OF THE PHILIPPINES
DEPARTMENT OF PUBLIC WORKS AND HIGHWAYS

PUHL - PMO	BUREAU OF DESIGN		OFFICE OF THE SECRETARY	
Submitted By:	Reviewed By:	Recommended By:	Recommended By: (See cover sheet for Signature)	Approved By: (See cover sheet for Signature/Approval)
DANILO C. TRAJANO, Project Director	ADRIANO M. DOROY, Chief, Bridges Division	GILBERTO S. REYES, Director IV (OIC)	MANUEL M. BONDAN, Undersecretary	SIMEON A. DATUMANONG, Secretary

PROJECT AND LOCATION :
THE DETAILED DESIGN STUDY ON UPGRADING INTER-URBAN HIGHWAY SYSTEM ALONG THE PAN-PHILIPPINE HIGHWAY (Plaridel, Cabanatuan and San Jose Bypasses)
PLARIDEL BYPASS - CONTRACT PACKAGE III

SCALE : AS SHOWN / FULL SIZE A1

SHEET CONTENTS :
BRIDGE NO. 8 ANGAT RIVER BRIDGE
REINFORCEMENT DETAILS FOR DIAPHRAGM
(INITIAL STAGE)

SHEET NO. : B8M-47