DRAINAGE

SCHEDULE OF DRAINAGE STRUCTURES

WATERSHED NO.	WATERSHED Q (cms)	STATION (kms)	SKEW	FINISHED GRADE ELEV. (m)	CULVERT CHARACTERISTICS: INVERT ELEVATION (m) LEFT	INVERT ELEVATION (m) CENTER	INVERT ELEVATION (m) RIGHT	SLOPE	RCPC (mm dia.)	RCBC (SxH) (mxm)	LENGTH (m) LEFT	LENGTH (m) RIGHT	LENGTH (m) TOTAL	STRUCTURES INLET	STRUCTURES OUTLET	CULVERT FLOW CAPACITY (cms)	REMARKS	RECOMMENDATION
MAIN BYPASS																		
1	5020.00	47+448	40° RF	16.07	11.70	11.75	11.80	0.00287		3-2.40x2.40	17.50	17.40	34.90	W	W	35.33	IRRIGATION STRUCTURE	CONSTRUCT RCBC, PROVIDE WINGWALLS
		47+515		16.36	12.38	12.44	12.50	0.00496		3-3.00x2.10	12.20	12.00	24.20	W	W	30.51	STORM WATER DRAINAGE	CONSTRUCT RCBC, PROVIDE WINGWALLS
		47+635		16.32	12.90	12.95	13.00	0.00403		3-1.80x1.50	12.50	12.30	24.80	W	W	29.73	STORM WATER DRAINAGE	CONSTRUCT RCBC, PROVIDE WINGWALLS
		47+950		17.26	14.05	14.12	14.20	0.00862		3-1.50x1.50	14.00	13.80	27.80	W	W	6.95	STORM WATER DRAINAGE	CONSTRUCT RCBC, PROVIDE WINGWALLS
		48+125.681	FIRST APPROACH							BRIDGE NO. 8								NEW BRIDGE
		49+245.681	SECOND APPROACH															
2	119.8	49+344.003	FIRST APPROACH							BRIDGE NO. 9								NEW BRIDGE
		49+384.95	SECOND APPROACH															
3	2.09	49+475		19.56	16.73	16.81	16.90	0.00345	1-910		24.50	25.50	50.00	F	F	1.09	STORM WATER DRAINAGE	INSTALL, PROVIDE FLARED TYPE HEADWALLS
ACCESS ROAD																		
		ROAD INTERSECTION C-3 (STA. 49+479.816)																
		0+020		18.67	17.00	17.03	17.05	0.00625	1-910		4.00	4.00	8.00	F	F	1.47	LATERAL PIPE	INSTALL, PROVIDE FLARED TYPE HEADWALLS

LEGEND:

S – STRAIGHT W – WINGWALL
F – FLARED CB – CATCH BASIN

SCHEDULE OF SIDE DITCH AND OUTER SEPARATOR DITCHES

STATION FROM	STATION TO	LENGTH (m)	TYPE	LOCATION	REMARKS
SIDE DITCH (MAIN BYPASS)					
47+420	47+950	530.00	E-3	LEFT SIDE	UNLINED
49+475	49+730	255.00	E-3	LEFT SIDE	UNLINED
OUTER SEPARATOR DITCH (MAIN BYPASS)					
49+400	49+550	150.00	E-2a	LEFT SIDE	LINED
49+560	49+625	65.00	E-2a	LEFT SIDE	LINED
49+580	49+625	45.00	E-2a	LEFT SIDE	LINED

QUANTITIES FOR RCBC

STATION	SIZE	Item 103(1) Structural Excavation (m^3)	Item 103(3)a Gravel Foundation Fill (m^3)		Item 404(1) Reinforcing Bar (Grade 40) (kg)		Item 405(1)a Structural Conc. Class "A" (m^3)		Item 405(6) Lean Concrete (m^3)	
		RCBC & WW	RCBC	WW	RCBC	WW	RCBC	WW	RCBC	WW
47+448	3-4.00 x 2.40	438.34	29.32	9.63	22,908.36	1,760.00	276.41	31.84	14.66	4.81
47+515	3-3.00 x 2.10	435.20	32.64	9.46	28,790.40	1,600.00	276.48	29.06	16.32	4.73
47+635	3-1.80 x 1.50	222.60	19.80	4.47	13,620.00	800.00	141.00	14.72	9.90	2.33
47+950	3-1.50 x 1.50	180.88	15.79	4.19	10,722.67	720.00	91.96	13.12	7.89	2.09
TOTAL		1,277.02	97.55	27.75	76,041.43	4,880.00	785.85	88.74	48.77	13.97

JICA
JAPAN INTERNATIONAL COOPERATION AGENCY
KATAHIRA & ENGINEERS INTERNATIONAL
YACHIYO ENGINEERING CO., LTD.

	DATE	SIGNATURE
DESIGNED	9/21/02	F. STA. MARIA
CHECKED	9/23/02	H. HAKIM
SUBMITTED	10/4/02	R. KAWAI

REPUBLIC OF THE PHILIPPINES
DEPARTMENT OF PUBLIC WORKS AND HIGHWAYS

PJHL – PMO	BUREAU OF DESIGN		OFFICE OF THE SECRETARY	
Submitted By:	Reviewed By:	Recommended By:	Recommended By: (See cover sheet for Signature)	Approved By: (See cover sheet for Signature/Approval)
DANILO C. TRAJANO	JOSEFINA M. ALAGAR	GILBERTO S. REYES	MANUEL M. BONGAN	SIMEON A. DATUMANONG
Project Director	Chief, Highways Division	OIC, Director IV	Undersecretary	Secretary

PROJECT AND LOCATION :
THE DETAILED DESIGN STUDY ON UPGRADING INTER-URBAN HIGHWAY SYSTEM ALONG THE PAN-PHILIPPINE HIGHWAY (Plaridel, Cabanatuan and San Jose Bypasses)
PLARIDEL BYPASS - CONTRACT PACKAGE III

SCALE : FULL SIZE A1

SHEET CONTENTS : SCHEDULE OF DRAINAGE STRUCTURE, SIDE DITCH AND QUANTITIES FOR RCBC

SHEET NO. : DG-01

47+635

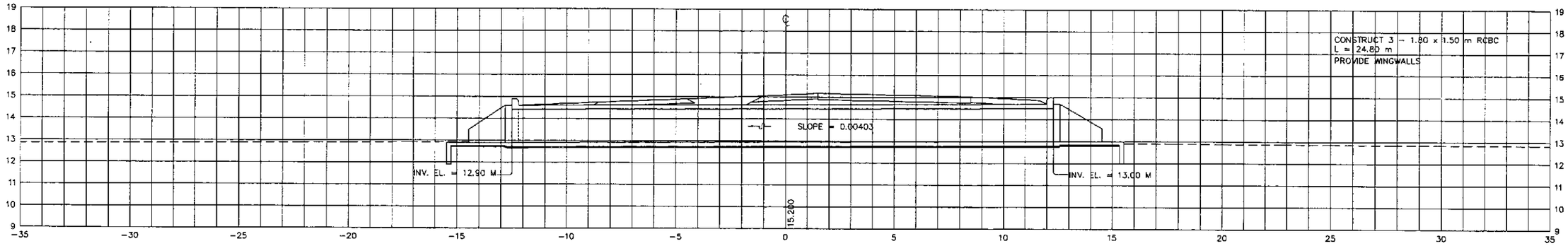

47+515

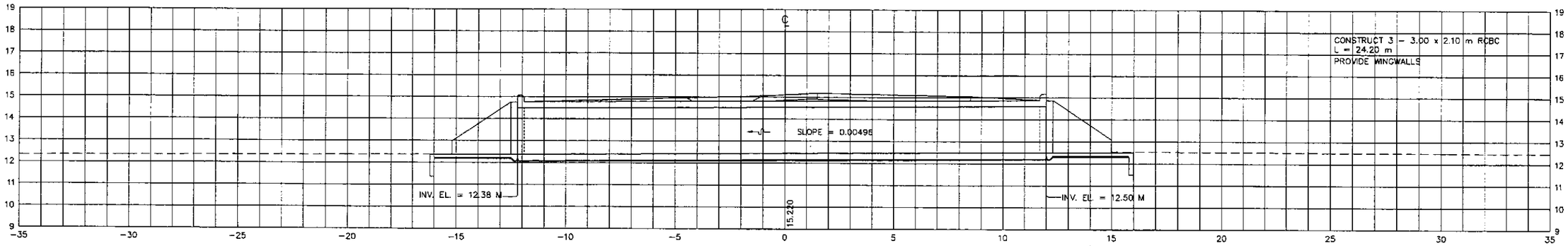

47+448

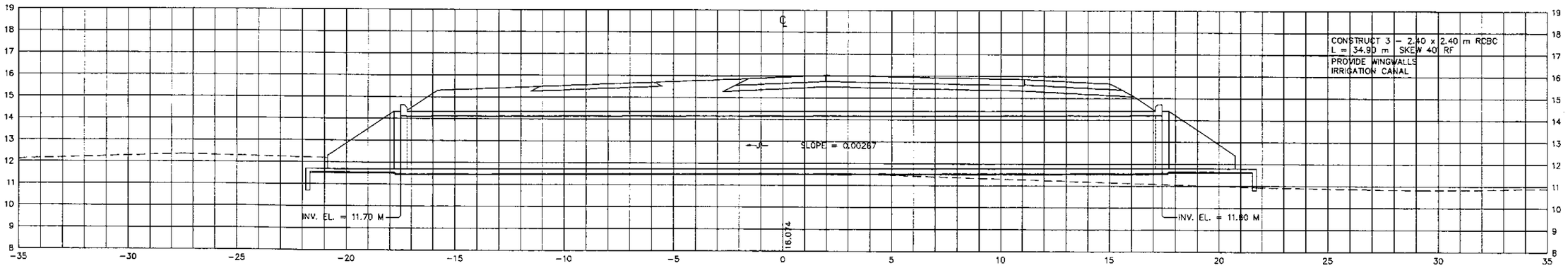

JICA
JAPAN INTERNATIONAL COOPERATION AGENCY

KEI KATAHIRA & ENGINEERS INTERNATIONAL
YEC YACHIYO ENGINEERING CO., LTD.

	DATE	SIGNATURE
DESIGNED	9/2/02	
CHECKED	9/23/02	
SUBMITTED	10/14/02	

REPUBLIC OF THE PHILIPPINES
DEPARTMENT OF PUBLIC WORKS AND HIGHWAYS

PJHL – PMO	BUREAU OF DESIGN		OFFICE OF THE SECRETARY	
Submitted By:	Reviewed By:	Recommended By:	Recommended By: (See cover sheet for Signature)	Approved By: (See cover sheet for Signature/Approval)
DANILO C. TRAJANO	JOSEFINA M. ALAGAR	GILBERTO S. REYES	MANUEL M. BONOAN	SIMEON A. DATUMANONG
Project Director	Chief, Highways Division	OIC, Director IV	Undersecretary	Secretary

PROJECT AND LOCATION :
THE DETAILED DESIGN STUDY ON UPGRADING INTER-URBAN HIGHWAY SYSTEM ALONG THE PAN-PHILIPPINE HIGHWAY (Plaridel, Cabanatuan and San Jose Bypasses)
PLARIDEL BYPASS - CONTRACT PACKAGE III

SCALE : 1:100 FULL SIZE A1

SHEET CONTENTS :
DRAINAGE CROSS-SECTIONS
ALONG BYPASS (INITIAL STAGE)
STA. 47+448 - STA. 47+635

SHEET NO. : DC-01

0+020

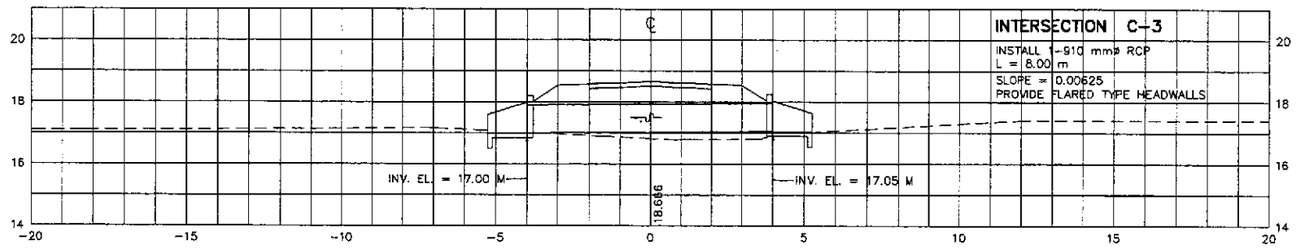

49+475

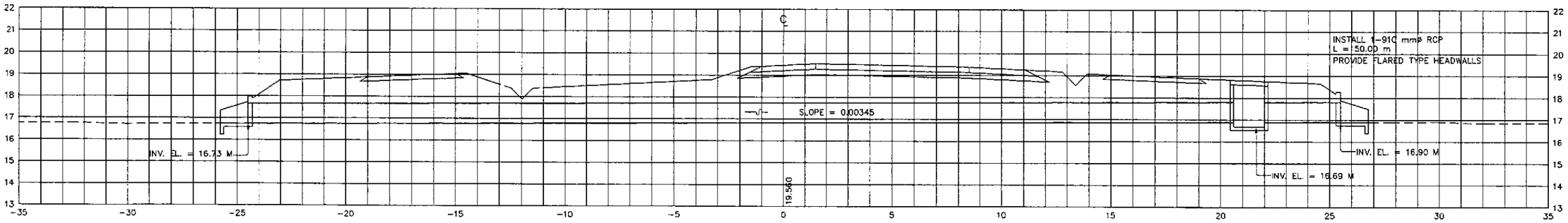

47+950

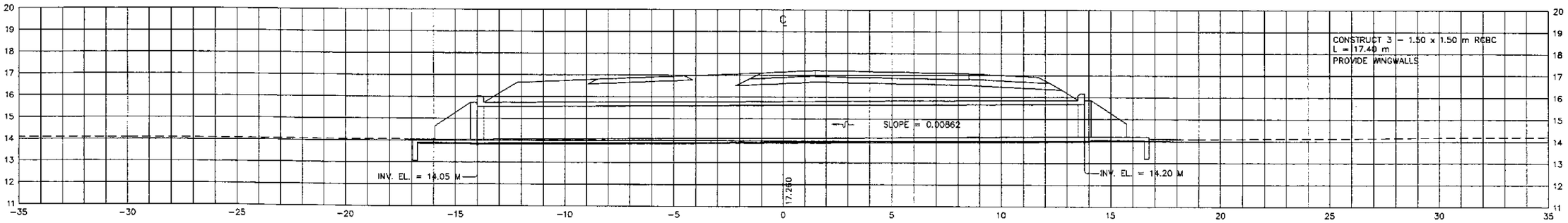

JICA
JAPAN INTERNATIONAL COOPERATION AGENCY

KEI KATAHIRA & ENGINEERS INTERNATIONAL
YEC YACHIYO ENGINEERING CO., LTD.

	DATE	SIGNATURE
DESIGNED	9/21/02	P. STA. ANA
CHECKED	9/23/02	A. HAKIM
SUBMITTED	9/24/02	TEAM LEADER

REPUBLIC OF THE PHILIPPINES
DEPARTMENT OF PUBLIC WORKS AND HIGHWAYS

PJHL - PMO	BUREAU OF DESIGN		OFFICE OF THE SECRETARY	
Submitted By:	Reviewed By:	Recommended By:	Recommended By: (See cover sheet for Signature)	Approved By: (See cover sheet for Signature/Approval)
DANILO C. TRAJANO	JOSEFINA M. ALAGAR	GILBERTO S. REYES	MANUEL M. BONOAN	SIMEON A. DATUMANONG
Project Director	Chief, Highways Division	OIC, Director IV	Undersecretary	Secretary

PROJECT AND LOCATION :
THE DETAILED DESIGN STUDY ON UPGRADING INTER-URBAN HIGHWAY SYSTEM ALONG THE PAN-PHILIPPINE HIGHWAY (Plaridel, Cabanatuan and San Jose Bypasses)
PLARIDEL BYPASS - CONTRACT PACKAGE III

SCALE : 1:100 FULL SIZE A1

SHEET CONTENTS :
DRAINAGE CROSS-SECTIONS
ALONG BYPASS (INITIAL STAGE)
AND ALONG ACCESS ROAD
STA.47+950 - STA.49+475 / INTERSECTION C-3

SHEET NO. : DC-02

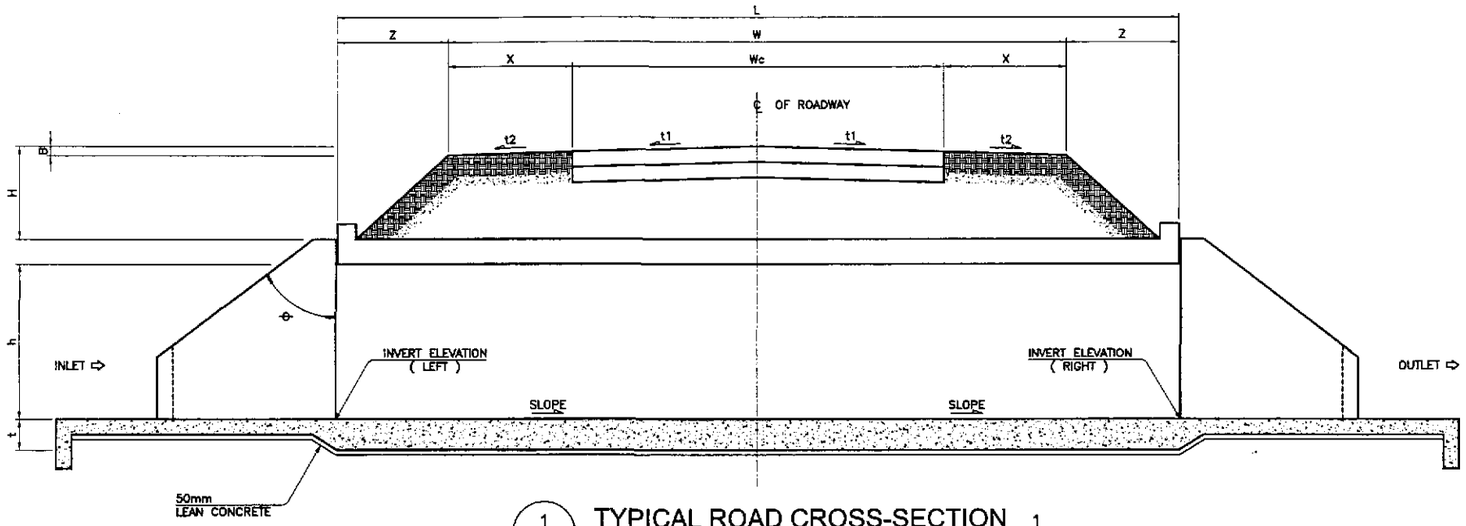

1 / DS-01 TYPICAL ROAD CROSS-SECTION 1
NOT TO SCALE

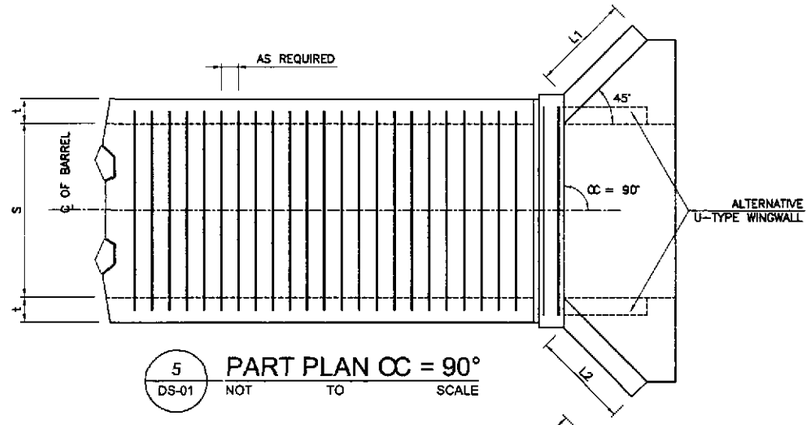

5 / DS-01 PART PLAN α = 90°
NOT TO SCALE

LEGEND :

W	—	WIDTH OF ROADWAY FORMATION
X	—	WIDTH OF SHOULDER
Wc	—	WIDTH OF CARRIAGEWAY
H	—	COVER ABOVE THE CULVERT
L	—	TOTAL LENGTH OF BARREL
t1	—	SLOPE OF CARRIAGEWAY
t2	—	SLOPE OF SHOULDER
Z	—	$[(H+t) - (B+200)] \tan \theta$
B	—	$xt_2+0.5t_1Wc$
h	—	HEIGHT OF CULVERT OPENING
t	—	THICKNESS OF CULVERT WALL OR SLAB
θ	—	SLOPE OF EMBANKMENT
α	—	ANGLE OF SKEW

HORIZONTAL SKEW ANGLE α	L (mm)
90°	$W+2\tan\theta\,[(H+t) - (B+200)]$
60°	$1.1547\ (W+2\tan\theta\,[(H+t)-(B+200)])$
45°	$1.4142\ (W+2\tan\theta\,[(H+t)-(B+200)])$

NOTES:

1. ALL DIMENSIONS ARE IN MILLIMETERS UNLESS OTHERWISE SPECIFIED.
3. MINIMUM CONCRETE COVER SHALL BE 40 CLEAR. WHEN HEIGHT OF FILL H=0 INCREASE COVER BY 30.

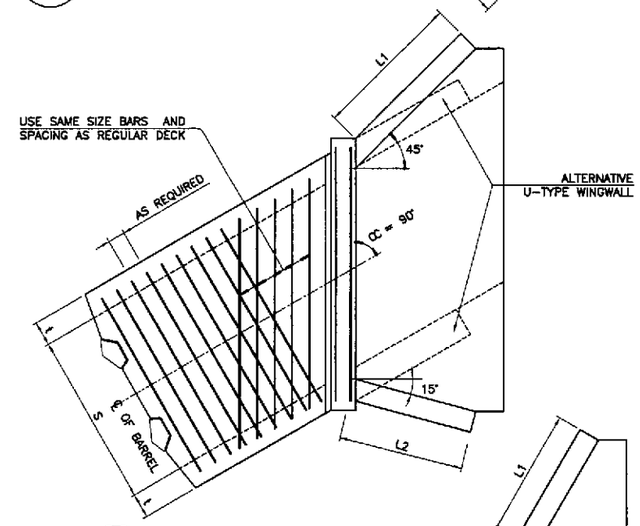

6 / DS-01 PART PLAN α = 60°
NOT TO SCALE

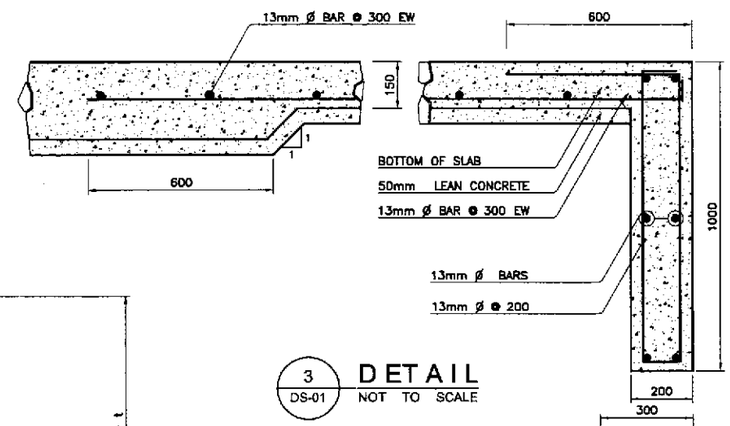

3 / DS-01 DETAIL
NOT TO SCALE

4 / DS-01 DETAIL
NOT TO SCALE

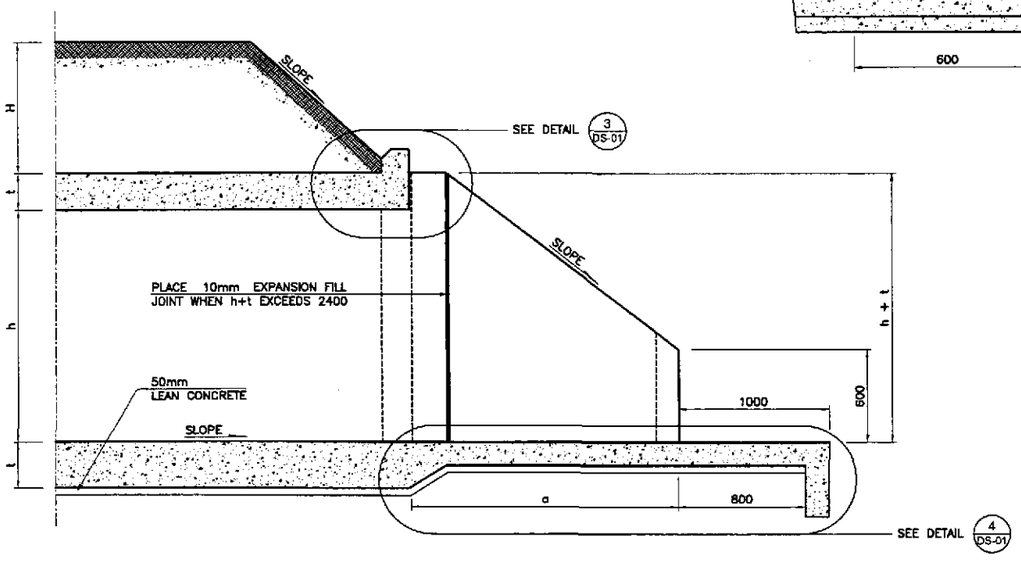

2 / DS-01 PART SECTION ALONG ℄ OF CULVERT
NOT TO SCALE

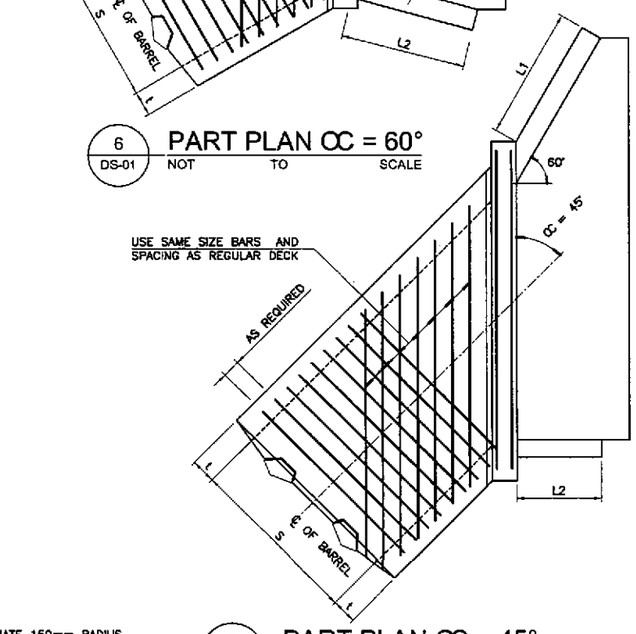

7 / DS-01 PART PLAN α = 45°
NOT TO SCALE

STANDARD DETAILS OF REINFORCED CONCRETE BOX CULVERT (RCBC)

JICA
JAPAN INTERNATIONAL COOPERATION AGENCY
KEI KATAHIRA & ENGINEERS INTERNATIONAL
YEO YACHIYO ENGINEERING CO., LTD.

	DATE	SIGNATURE
DESIGNED	9/21/02	STA. MARIA
CHECKED	9/23/02	H. HAKIM
SUBMITTED	10/11/02	TEAM LEADER

REPUBLIC OF THE PHILIPPINES
DEPARTMENT OF PUBLIC WORKS AND HIGHWAYS

PJHL – PMO	BUREAU OF DESIGN		OFFICE OF THE SECRETARY	
Submitted By:	Reviewed By:	Recommended By:	Recommended By: (See cover sheet for Signature)	Approved By: (See cover sheet for Signature/Approval)
DANILO C. TRAJANO	JOSEFINA M. ALAGAR	GILBERTO S. REYES	MANUEL M. BONOAN	SIMEON A. DATUMANONG
Project Director	Chief, Highways Division	OIC, Director IV	Undersecretary	Secretary

PROJECT AND LOCATION :	SCALE :	SHEET CONTENTS :	SHEET NO. :
THE DETAILED DESIGN STUDY ON UPGRADING INTER-URBAN HIGHWAY SYSTEM ALONG THE PAN-PHILIPPINE HIGHWAY (Plaridel, Cabanatuan and San Jose Bypasses)	1:100	STANDARD DETAILS OF REINFORCED CONCRETE BOX CULVERT (RCBC)	DS-01
PLARIDEL BYPASS - CONTRACT PACKAGE III	FULL SIZE A1		

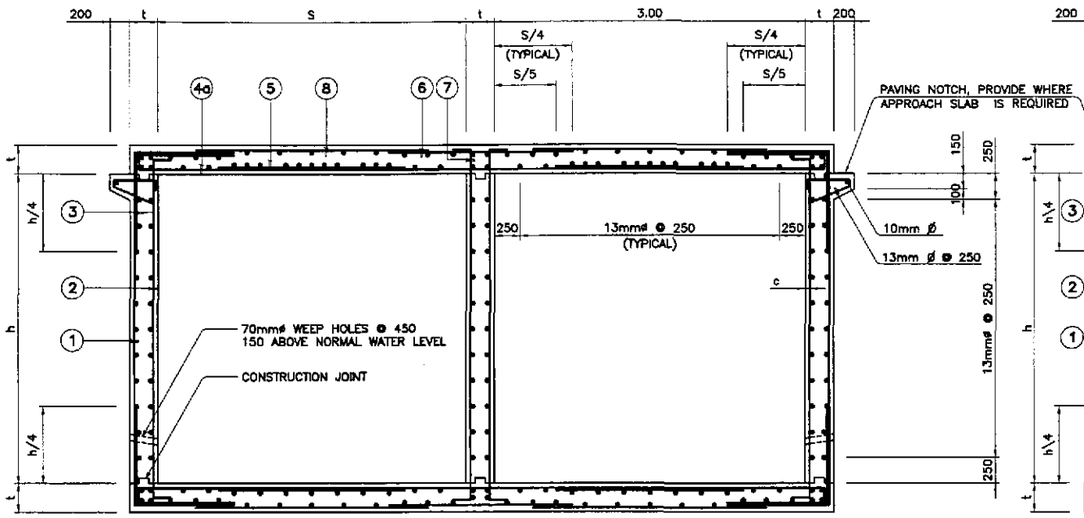

2 DS-02 DOUBLE BARREL SECTION
SCALE 1:30

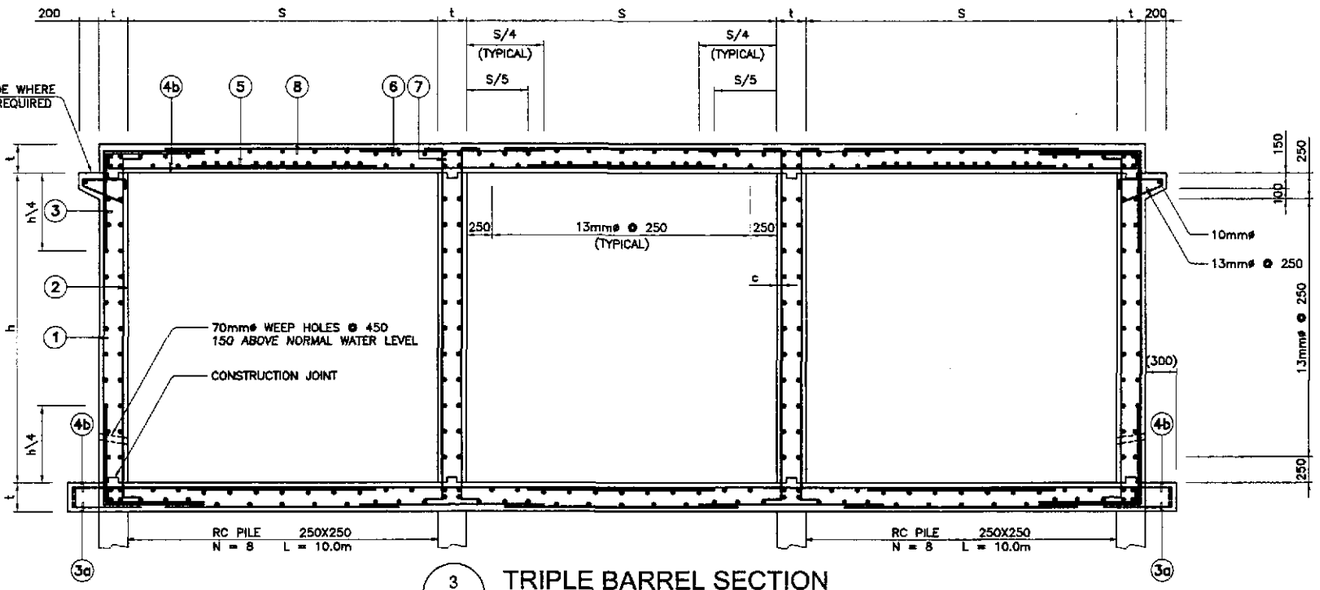

3 DS-02 TRIPLE BARREL SECTION
SCALE 1:30

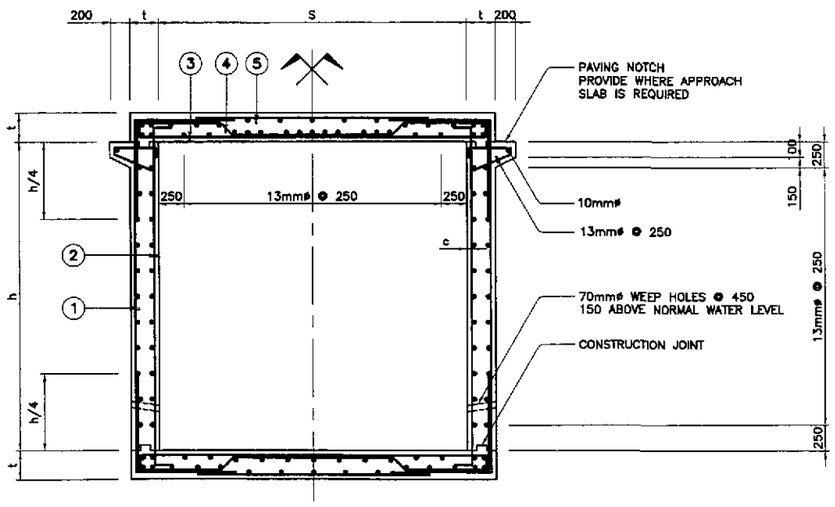

1 DS-02 SINGLE BARREL SECTION
SCALE 1:30

BAR BENDING DIAGRAM

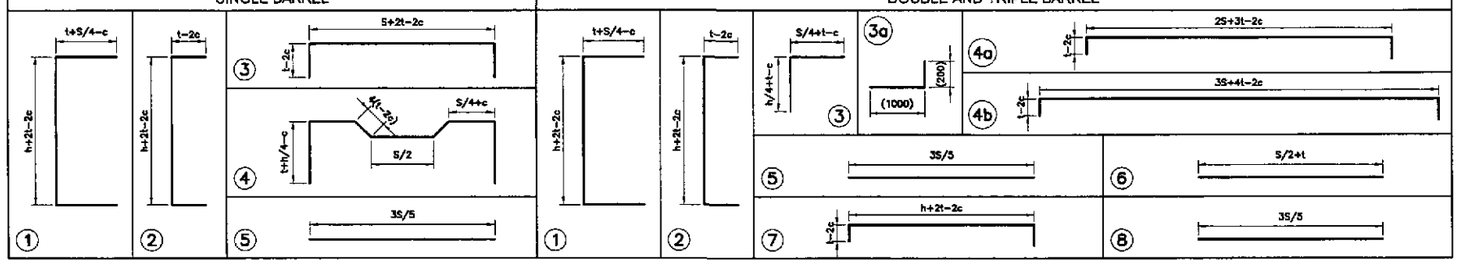

CLEAR		SINGLE BARREL BOX CULVERT											DOUBLE AND TRIPLE BARREL BOX CULVERT															
SPAN S	HEIGHT h	t	BAR 1		BAR 2		BAR 3		BAR 4		BAR 5		t	BAR 1		BAR 2		BAR 3		BAR 4		BAR 5		BAR 6		BAR 7		BAR 8	
			ø	SPACING	ø	SPACING	ø	SPACING	ø	SPACING	ø	SPACING		ø	SPACING	ø	SPACING	ø	SPACING	ø	SPACING	ø	SPACING	ø	SPACING	ø	SPACING	ø	SPACING
1250	1000	180	13	300	13	300	13	300	13	300	13	300	180	13	300	13	300	13	300	13	300	13	300	20	200	13	300	13	300
	1250	180	13	300	13	300	13	300	13	300	13	300	180	13	300	16	300	13	300	13	300	13	300	20	200	13	300	13	300
	1500	180	13	300	13	280	13	300	13	300	13	300	180	13	300	16	280	13	300	13	300	13	300	20	200	13	300	13	300
	1800	180	13	300	13	250	13	300	13	300	13	300	180	13	300	16	250	13	300	13	300	13	300	20	200	13	300	13	300
1500	1000	180	16	240	16	300	16	240	16	240	13	300	200	16	300	16	300	16	300	16	300	16	300	20	200	13	300	13	280
	1250	180	16	240	16	300	16	240	16	240	13	300	200	16	300	16	300	16	300	16	300	16	300	20	200	13	300	13	280
	1500	180	16	240	16	280	16	240	16	240	13	300	200	16	300	16	280	16	300	16	300	16	300	20	200	13	300	13	280
	1800	180	16	240	16	280	16	240	16	240	13	300	200	16	300	16	260	16	300	16	300	16	300	20	200	13	300	13	280
1800	1250	200	16	260	16	300	16	260	16	260	13	280	250	16	300	16	300	16	300	16	300	16	300	20	190	13	300	13	220
	1500	200	16	260	16	300	16	260	16	260	13	280	250	16	300	16	280	16	300	16	300	16	300	20	190	13	300	13	220
	1800	200	16	260	16	280	16	260	16	260	13	280	250	16	300	16	280	16	300	16	300	16	300	20	190	13	300	13	220
	2100	200	16	260	16	260	16	260	16	260	13	280	250	16	300	16	260	16	300	16	300	16	300	20	190	13	300	13	220
2400	1800	220	16	220	16	280	16	220	16	220	13	240	300	16	300	16	280	16	300	16	300	16	300	20	120	13	300	13	200
	2100	220	16	220	16	260	16	220	16	220	13	240	300	16	300	16	280	16	300	16	300	16	300	20	120	13	300	13	200
	2400	220	16	220	16	200	16	220	16	220	13	240	300	16	300	16	280	16	300	16	300	16	300	20	120	13	300	13	200
	2750	220	16	200	16	180	16	200	16	200	13	240	300	16	300	16	280	16	300	16	300	16	300	20	120	13	300	13	200
3000	2100	280	16	260	16	260	16	260	16	260	13	200	300	20	300	16	280	20	300	20	300	20	300	25	170	13	300	13	200
	2400	280	16	260	16	260	16	260	16	260	13	200	300	20	300	16	280	20	300	20	300	20	300	25	170	13	300	13	200
	2750	280	16	200	16	240	16	220	16	200	13	200	300	20	300	16	200	20	300	20	300	20	300	25	170	16	300	13	200
	3000	280	16	200	16	220	16	200	16	200	13	200	300	20	300	16	200	20	300	20	300	20	300	25	170	16	300	13	200
4000	2500												300	20	300	16	200	20	300	20	300	20	300	25	170	16	300	13	200

NOTE:

FOR WALL THICKNESS LESS THAN 240, STAGGER HORIZONTAL REINFORCEMENT AS SHOWN.

LEGEND:

c = CONCRETE CLEAR COVER (50mm)

o—— ADDITIONAL REBARS IF FILL IS LESS THAN 600mm

STANDARD DETAILS OF REINFORCED CONCRETE BOX CULVERT (RCBC) BARRELS

JICA
JAPAN INTERNATIONAL COOPERATION AGENCY
KATAHIRA & ENGINEERS INTERNATIONAL
YACHIYO ENGINEERING CO., LTD.

	DATE	SIGNATURE
DESIGNED	9/21/02	F. STA. MARIA
CHECKED	9/23/02	A. HORIN
SUBMITTED	10/11/02	TEAM LEADER

REPUBLIC OF THE PHILIPPINES
DEPARTMENT OF PUBLIC WORKS AND HIGHWAYS

PJHL – PMO	BUREAU OF DESIGN		OFFICE OF THE SECRETARY	
Submitted By:	Reviewed By:	Recommended By:	Recommended By: (See cover sheet for Signature)	Approved By: (See cover sheet for Signature/Approval)
DANILO C. TRAJANO	JOSEFINA M. ALAGAR	GILBERTO S. REYES	MANUEL M. BONDAN	SIMEON A. DATUMANONG
Project Director	Chief, Highways Division	OIC, Director IV	Undersecretary	Secretary

PROJECT AND LOCATION :	SCALE :	SHEET CONTENTS :	SHEET NO. :
THE DETAILED DESIGN STUDY ON UPGRADING INTER-URBAN HIGHWAY SYSTEM ALONG THE PAN-PHILIPPINE HIGHWAY (Plaridel, Cabanatuan and San Jose Bypasses) PLARIDEL BYPASS - CONTRACT PACKAGE III	1:30 FULL SIZE A1	STANDARD DETAILS OF RCBC BARRELS	DS-02

QUANTITIES FOR STANDARD BOX CULVERTS

CLEAR SPAN S	CLEAR HEIGHT h	SINGLE CONCRETE (m3)	SINGLE REINFORCEMENT (kg)	DOUBLE CONCRETE (m3)	DOUBLE REINFORCEMENT (kg)	TRIPLE CONCRETE (m3)	TRIPLE REINFORCEMENT (kg)
1250	1000	0.94	113.32	1.63	209.22	2.33	296.18
	1250	1.03	121.63	1.77	216.22	2.51	312.39
	1500	1.12	130.98	1.90	232.07	2.69	330.39
	1800	1.23	141.71	2.07	249.50	2.91	352.09
1500	1000	1.03	165.90	2.04	253.90	2.92	354.80
	1250	1.12	177.10	2.19	256.00	3.12	370.20
	1500	1.21	189.60	2.34	279.60	3.32	387.10
	1800	1.32	202.50	2.52	296.20	3.56	407.10
1800	1250	1.38	189.20	3.11	312.30	4.45	437.00
	1500	1.48	199.90	3.30	326.10	4.70	454.00
	1800	1.60	214.80	3.53	342.80	5.00	475.20
	2100	1.72	239.80	3.75	357.50	5.30	494.40
2400	1800	2.04	272.70	5.04	431.80	7.20	619.10
	2100	2.17	288.50	5.31	447.30	7.56	637.10
	2400	2.31	314.10	5.58	461.80	7.92	656.40
	2750	2.46	356.70	5.90	478.60	8.34	677.70
3000	2100	3.17	308.70	6.03	635.70	8.64	899.70
	2400	3.34	321.30	6.30	652.00	9.00	919.60
	2750	3.53	374.40	6.62	705.60	9.42	895.00
	3000	3.67	413.50	6.84	721.80	9.72	1015.40
4000	2500	–	–	7.59	825.18	–	–

QUANTITIES FOR STANDARD WINGWALLS

m (meter)	h+t (meter)	L (meter)	SINGLE CONCRETE (m3)	SINGLE REINFORCEMENT (kg)	DOUBLE CONCRETE (m3)	DOUBLE REINFORCEMENT (kg)	TRIPLE CONCRETE (m3)	TRIPLE REINFORCEMENT (kg)
1.37	1.18	1.23	2.41	150	2.94	180	3.48	220
1.75	1.43	1.76	3.48	220	4.08	265	4.72	300
2.12	1.88	2.29	4.66	300	5.36	350	6.06	395
2.57	1.98	2.93	6.22	405	7.01	450	7.80	500
1.37	1.18	1.23	2.50	140	3.26	180	3.88	220
1.75	1.43	1.76	3.69	210	4.42	250	5.16	290
2.12	1.68	2.29	4.78	270	5.73	320	6.56	360
2.57	1.98	2.93	6.35	350	7.42	410	8.37	460
1.78	1.45	1.80	3.81	210	4.98	280	5.90	330
2.15	1.70	2.33	5.03	280	6.33	350	7.36	400
2.60	2.00	2.97	6.48	360	8.09	450	9.26	510
3.05	2.30	3.61	8.37	460	10.00	550	11.31	620
2.63	2.02	3.01	7.08	390	9.14	500	10.71	590
3.08	2.32	3.65	9.28	510	11.61	640	13.37	740
3.53	2.62	4.28	11.42	630	13.98	770	15.92	880
4.06	2.97	5.03	14.17	780	17.90	990	19.15	1050
3.17	2.38	3.78	10.08	560	12.38	680	14.53	800
3.62	2.68	4.41	12.30	680	14.83	820	17.19	940
4.15	3.03	5.15	15.15	840	17.94	990	20.57	1130
4.52	3.28	5.68	17.34	960	20.33	1120	23.15	1270
3.80	2.80	4.67	–	–	17.01	671	–	–

GENERAL NOTES :

SPECIFICATION :

AASHTO STANDARD SPECIFICATION FOR HIGHWAY BRIDGES, 16th EDITION 1996.

DESIGN LOAD :

LIVE LOAD MS-18 (HS 20-44)

CONCRETE :

ALL CONCRETE SHALL HAVE A MINIMUM COMPRESSION STRENGTH IN 28 DAYS OF f'c = 20.7 MPa (3000psi). ALL EXPOSED CORNERS TO BE CHAMFERED 20 MINIMUM. NO CONSTRUCTION JOINT ARE TO BE MADE EXCEPT WHERE SHOWN. WHEN BOTTOM SLAB IS SUBJECT TO ABRASION ADD 25mm TO BOTTOM SLAB TO INCREASE COVERAGE ON STEEL.

STEEL REINFORCEMENT :

ALL REINFORCING STEEL TO BE INTERMEDIATE (GRADE 40) ASTM A-615 WITH DEFORMATIONS CONFORMING TO ASTM A-305.

GENERAL :

IN STATING CULVERT SIZE, GIVE SPAN BY HEIGHT (SPAN FIRST) WHEN HEIGHT OF FILL, H=0 THE TOP OF SURFACE OF THE UPPER SLAB SHALL FOLLOW THE CROWN OF THE FINISHED ROADWAY. THE BOX CULVERT SHALL BE CONSTRUCTED ON A LAYER OF LEAN CONCRETE 50mm MINIMUM THICKNESS.

LIVE LOAD DISTRIBUTION REINFORCEMENT :

WHEN THERE IS LESS THAN 600mm OF FILL ABOVE TOP SLAB OF CULVERT ADDITIONAL REINFORCEMENT TRANSVERSE TO THE MAIN REINFORCEMENT IS ADDED TO THE BOTTOM OF THE TOP SLAB IN ACCORDANCE WITH AASHTO 1.3.2.E.

HEIGHT OF FILL :

MAXIMUM HEIGHT OF FILL IS 3000mm ABOVE TOP SLAB, FOR HEIGHT OF FILL GREATER THAN 3000mm SPECIAL DESIGN OF BOX CULVERT SHOULD BE DONE.

HORIZONTAL SKEW ANGLE CC	LENGTH OF WINGWALLS
90°	L1 = L2 = 1.414a
60°	L1 = 1.414a L2 = 1.035a
45°	L1 = 2.000a L2 = a

WHERE :

a = 1.5 (h+t-600) FOR SLOPE 1.5:1

a = 2.0 (h+t-600) FOR SLOPE 2:1

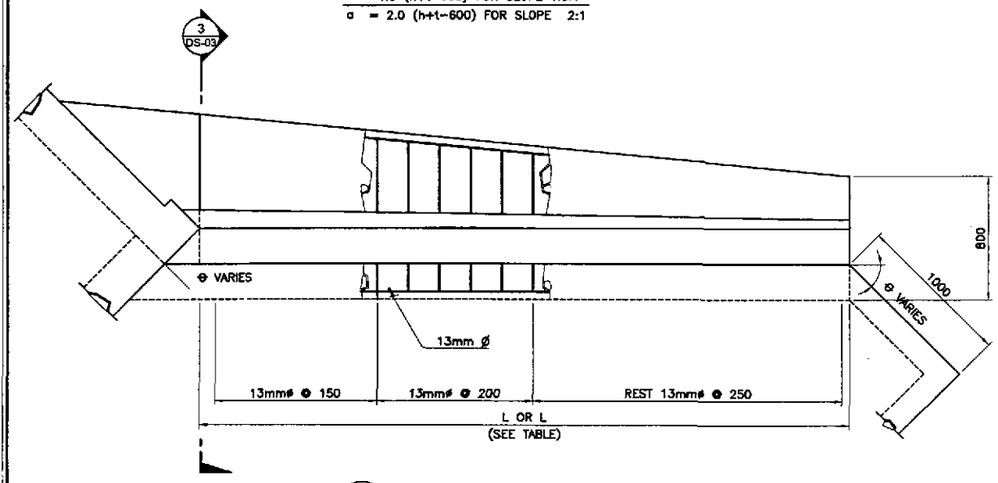

1 DS-03 WINGWALL PLAN
SCALE 1:40

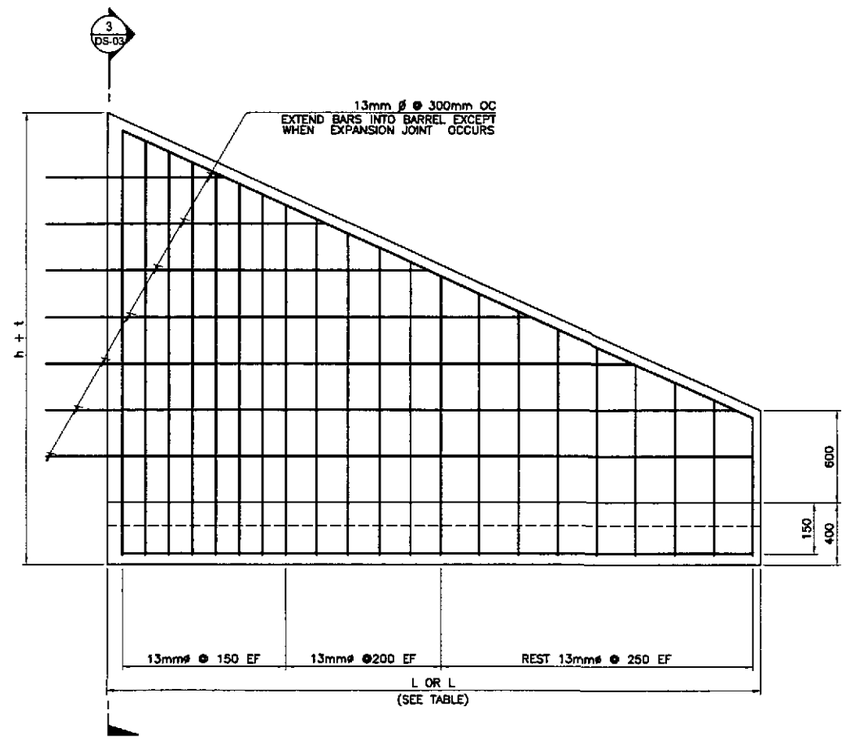

2 DS-03 WINGWALL ELEVATION
SCALE 1:40

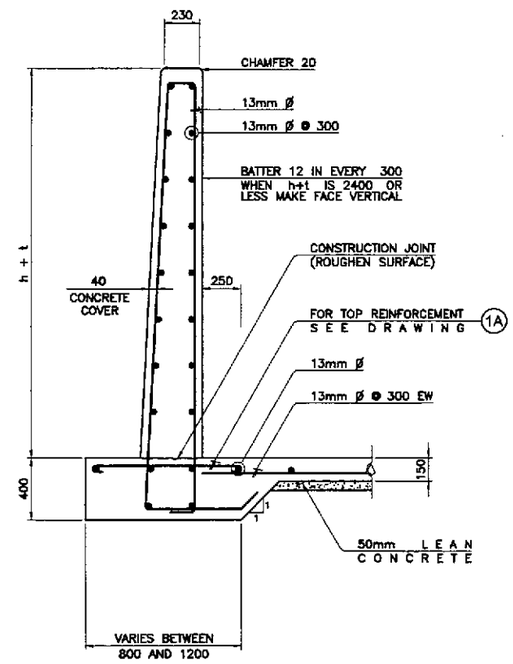

3 DS-03 SECTION
SCALE 1:40

RCBC WINGWALL DETAILS

JICA
JAPAN INTERNATIONAL COOPERATION AGENCY
KEI KATAHIRA & ENGINEERS INTERNATIONAL
YEC YACHIYO ENGINEERING CO., LTD.

	DATE	SIGNATURE
DESIGNED	9/21/02	
CHECKED	9/23/02	
SUBMITTED	10/14/02	TEAM LEADER

REPUBLIC OF THE PHILIPPINES
DEPARTMENT OF PUBLIC WORKS AND HIGHWAYS

PJHL – PMO	BUREAU OF DESIGN		OFFICE OF THE SECRETARY	
Submitted By:	Reviewed By:	Recommended By:	Recommended By: (See cover sheet for Signature)	Approved By: (See cover sheet for Signature/Approval)
DANILO C. TRAJANO	JOSEFINA M. ALAGAR	GILBERTO S. REYES	MANUEL M. BONGAN	SIMEON A. DATUMANONG
Project Director	Chief, Highways Division	OIC, Director IV	Undersecretary	Secretary

PROJECT AND LOCATION :
THE DETAILED DESIGN STUDY ON UPGRADING INTER-URBAN HIGHWAY SYSTEM ALONG THE PAN-PHILIPPINE HIGHWAY (Plaridel, Cabanatuan and San Jose Bypasses)
PLARIDEL BYPASS - CONTRACT PACKAGE III

SCALE : 1:40 FULL SIZE A1

SHEET CONTENTS : STANDARD DETAILS OF RCBC WINGWALLS

SHEET NO. : DS-03

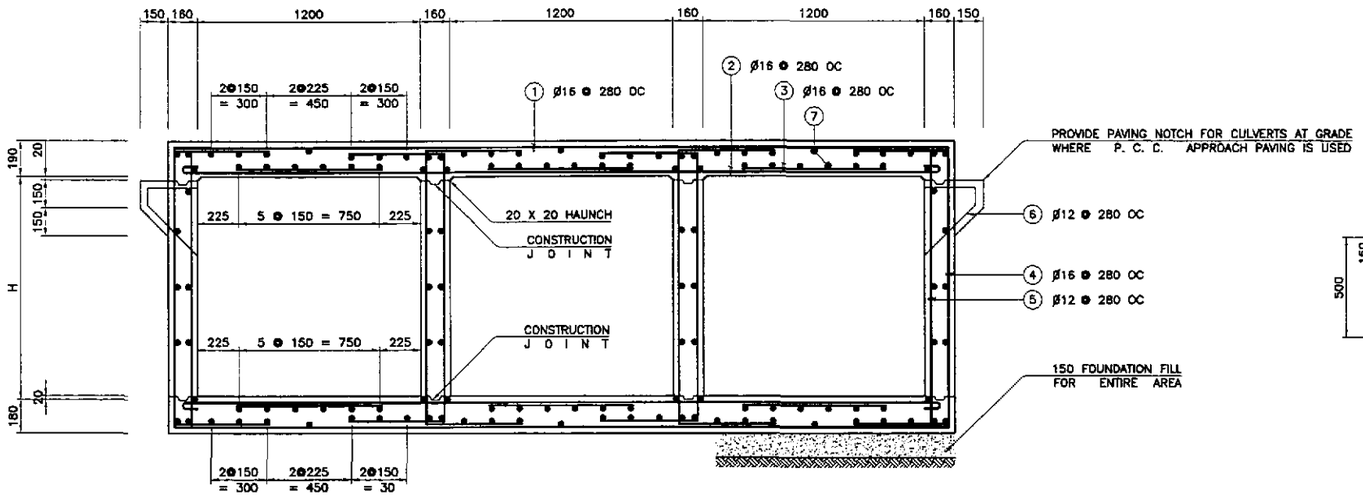

1A DS-04 SECTION ALONG ℄ OF ROADWAY
NOT TO SCALE

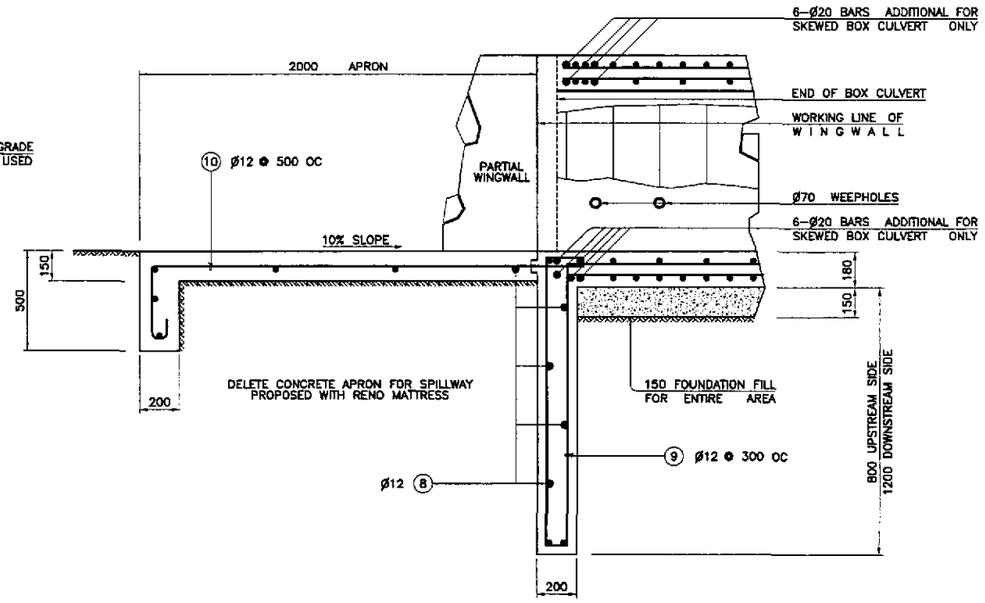

1B DS-04 PARTIAL SECTION A
NOT TO SCALE

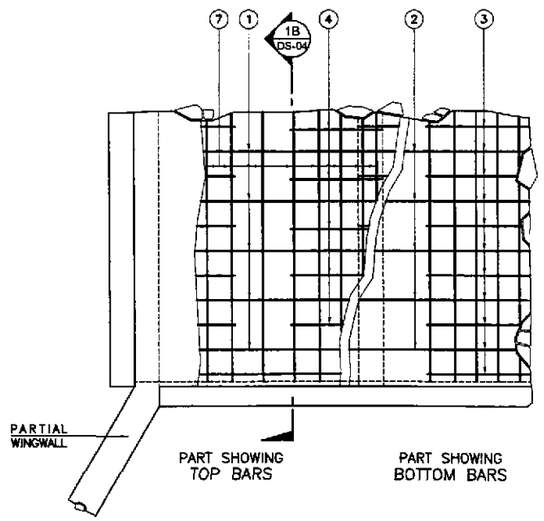

PARTIAL PLAN
NOT TO SCALE

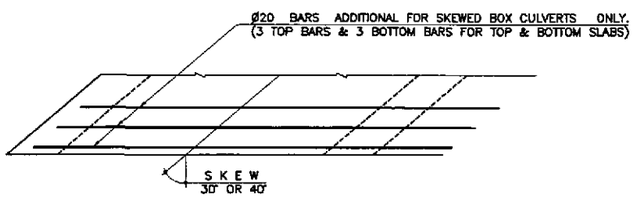

NOTE:
ALL OTHER REINFORCING BARS SHALL BE PERPENDICULAR OR PARALLEL, AS THE CASE MAYBE, TO BOX AXIS.

BAR BENDING DIAGRAM

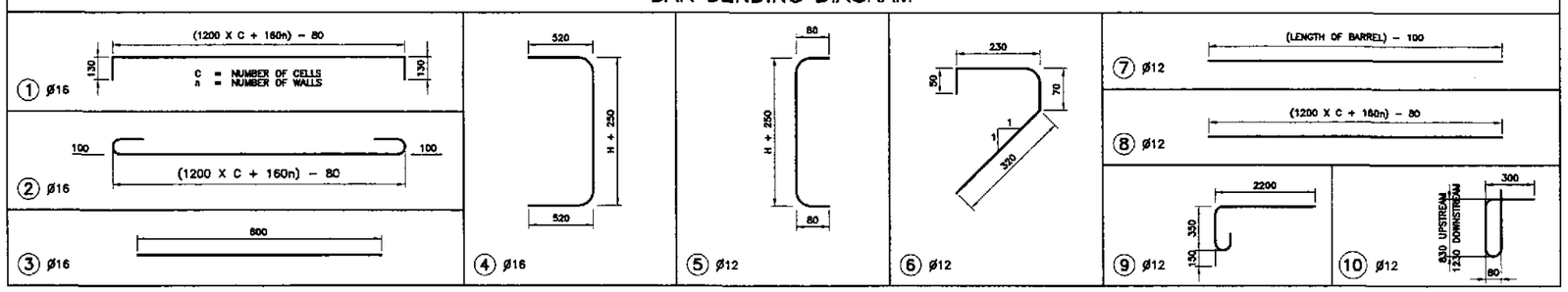

ESTIMATE OF QUANTITIES (PER LINEAR METER OF LENGTH)

	SINGLE BARREL				DOUBLE BARREL				TRIPLE BARREL			
HEIGHT OF CELL "H" (METER)	CONCRETE CLASS "A" (m^3)	REINFORCING STEEL (kg)	EXCAVATION (m^3)	FOUNDATION F I L L (m^3)	CONCRETE CLASS "A" (m^3)	REINFORCING STEEL (kg)	EXCAVATION (m^3)	FOUNDATION F I L L (m^3)	CONCRETE CLASS "A" (m^3)	REINFORCING STEEL (kg)	EXCAVATION (m^3)	FOUNDATION F I L L (m^3)
1.20	0.95	132.59	0.67	0.27	1.64	217.00	1.12	0.48	2.34	299.82	1.56	0.68
0.90	0.85	127.30	0.67	0.27	1.50	209.08	1.12	0.48	2.14	289.04	1.56	0.68
0.60	0.75	122.01	0.67	0.27	1.35	201.15	1.12	0.48	1.95	278.48	1.56	0.68

ADDITIONAL WEIGHT OF REINFORCEMENT PER END OF BOX CULVERT
30° SKEW = 98.5 kgs. 30° SKEW = 46.5 kgs.
45° SKEW = 120.5 kgs. 45° SKEW = 57.0 kgs.

APRON AND END TOE FOR BOTH ENDS

	SINGLE BARREL			DOUBLE BARREL			TRIPLE BARREL		
COMMON TO ALL HEIGHT OF CELL	CONCRETE CLASS "A" (m^3)	REINFORCING STEEL (kg)	EXCAVATION (m^3)	CONCRETE CLASS "A" (m^3)	REINFORCING STEEL (kg)	EXCAVATION (m^3)	CONCRETE CLASS "A" (m^3)	REINFORCING STEEL (kg)	EXCAVATION (m^3)
	1.73	57.94	3.64	3.28	111.34	6.08	4.83	164.70	8.53

1 DS-04 LOW DEPTH TYPE BOX CULVERT
NOT TO SCALE

JICA
JAPAN INTERNATIONAL COOPERATION AGENCY
KEI KATAHIRA & ENGINEERS INTERNATIONAL
YEO YACHIYO ENGINEERING CO., LTD.

	DATE	SIGNATURE
DESIGNED	9/21/02	
CHECKED	9/23/02	
SUBMITTED	10/14/02	TEAM LEADER

REPUBLIC OF THE PHILIPPINES
DEPARTMENT OF PUBLIC WORKS AND HIGHWAYS

PJHL - PMO	BUREAU OF DESIGN		OFFICE OF THE SECRETARY	
Submitted By:	Reviewed By:	Recommended By:	Recommended By: (See cover sheet for Signature)	Approved By: (See cover sheet for Signature/Approval)
DANILO C. TRAJANO	JOSEFINA M. ALAGAR	GILBERTO S. REYES	MANUEL M. BONDAN	SIMEON A. DATUMANONG
Project Director	Chief, Highways Division	DIC, Director IV	Undersecretary	Secretary

PROJECT AND LOCATION :
THE DETAILED DESIGN STUDY ON UPGRADING INTER-URBAN HIGHWAY SYSTEM ALONG THE PAN-PHILIPPINE HIGHWAY (Plaridel, Cabanatuan and San Jose Bypasses)
PLARIDEL BYPASS - CONTRACT PACKAGE III

SCALE : NOT TO SCALE
FULL SIZE A1

SHEET CONTENTS : STANDARD LOW DEPTH TYPE BOX CULVERT (1 of 2)

SHEET NO. : DS-04

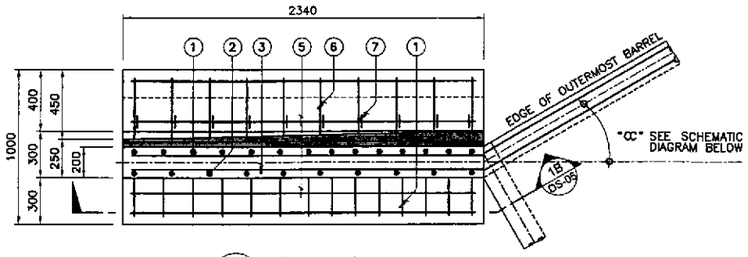

1A DS-05 PLAN SCALE 1:40

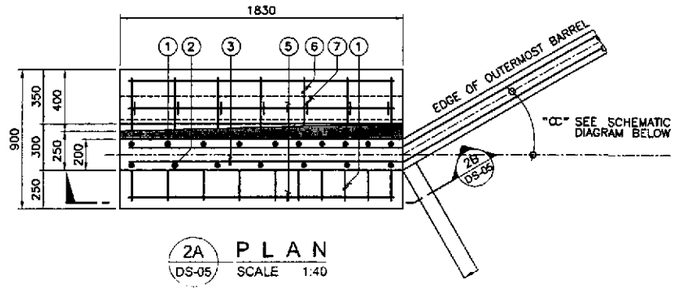

2A DS-05 PLAN SCALE 1:40

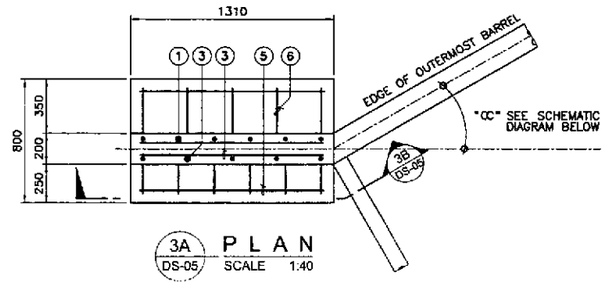

3A DS-05 PLAN SCALE 1:40

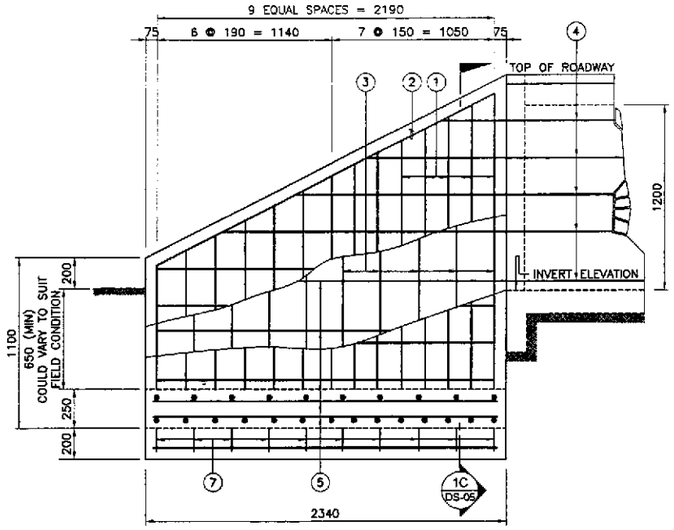

1A DS-05 ELEVATION SCALE 1:40

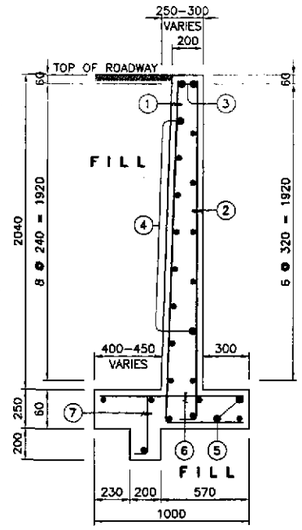

1C DS-05 SECTION SCALE 1:40

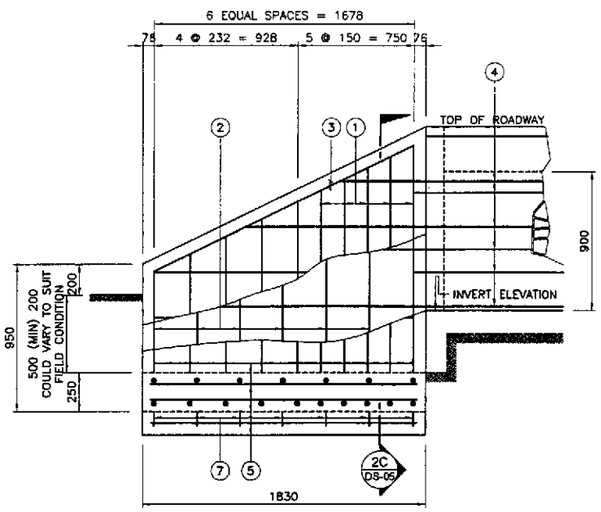

2B DS-05 ELEVATION SCALE 1:40

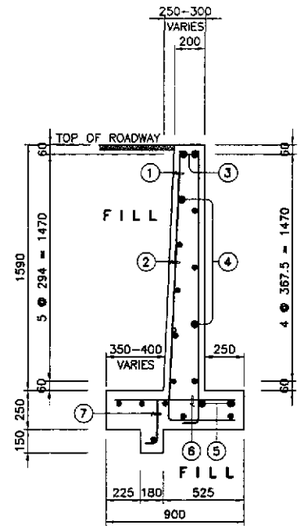

2C DS-05 SECTION SCALE 1:40

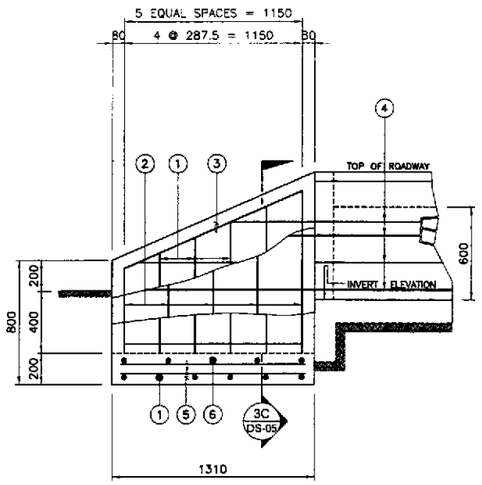

3B DS-05 ELEVATION SCALE 1:40

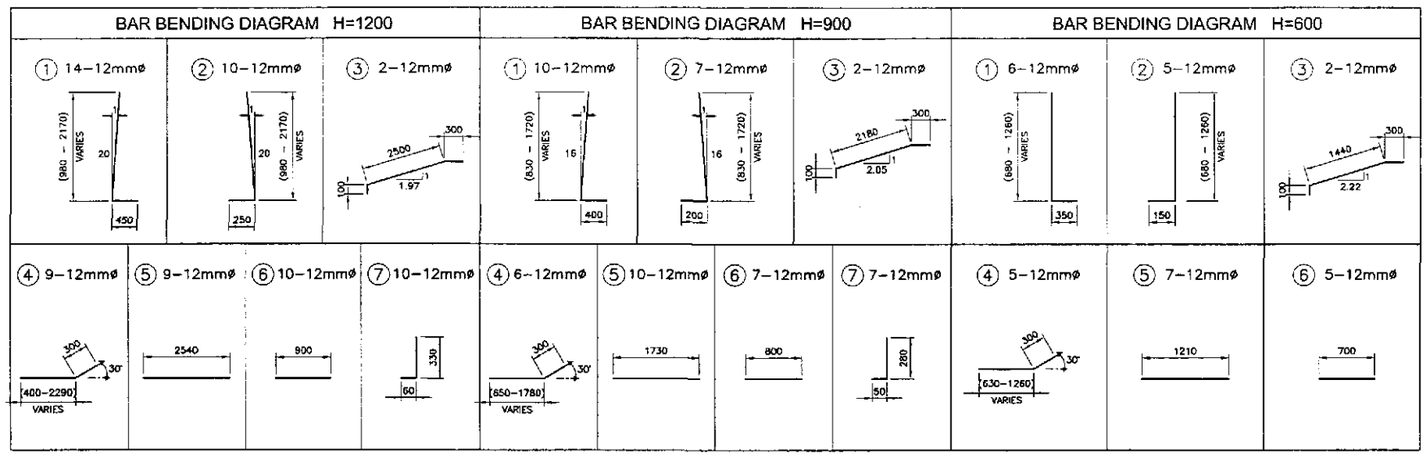

ESTIMATE OF QUANTITIES PER WINGWALL				
HEIGHT (m)	CONCRETE CLASS "A" (m^3)	REINFORCEMENT (kg)	EXCAVATION (m^3)	FOUNDATION FILL (m^3)
1.20	2.96	102.89	5.78	0.30
0.90	1.90	57.68	3.53	0.22
0.60	0.88	31.43	1.97	0.15

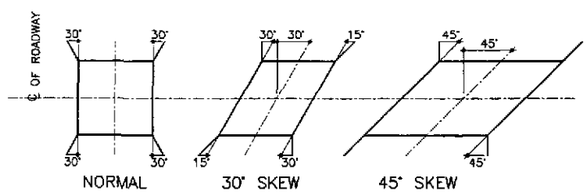

4 DS-05 SCHEMATIC DIAGRAM SHOWING FLARE OF WINGWALL NOT TO SCALE

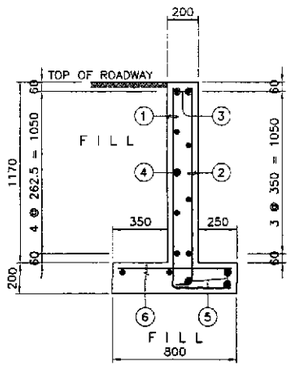

3C DS-05 SECTION SCALE 1:40

LOW DEPTH TYPE BOX CULVERT

JICA
JAPAN INTERNATIONAL COOPERATION AGENCY
KEI KATAHIRA & ENGINEERS INTERNATIONAL
YEC YACHIYO ENGINEERING CO., LTD.

	DATE	SIGNATURE
DESIGNED	9/21/02	A. STA. MARIA
CHECKED	9/23/02	A. HAKIM
SUBMITTED	10/14/02	TEAM LEADER

REPUBLIC OF THE PHILIPPINES
DEPARTMENT OF PUBLIC WORKS AND HIGHWAYS

PJHL - PMO	BUREAU OF DESIGN		OFFICE OF THE SECRETARY	
Submitted By:	Reviewed By:	Recommended By:	Recommended By: (See cover sheet for Signature)	Approved By: (See cover sheet for Signature/Approval)
DANILO C. TRAJANO	JOSEFINA M. ALAGAR	GILBERTO S. REYES	MANUEL M. BONDAN	SIMEON A. DATUMANONG
Project Director	Chief, Highways Division	OIC, Director IV	Undersecretary	Secretary

PROJECT AND LOCATION :
THE DETAILED DESIGN STUDY ON UPGRADING INTER-URBAN HIGHWAY SYSTEM ALONG THE PAN-PHILIPPINE HIGHWAY (Plaridel, Cabanatuan and San Jose Bypasses)
PLARIDEL BYPASS - CONTRACT PACKAGE III

SCALE : AS SHOWN FULL SIZE A1

SHEET CONTENTS : STANDARD LOW DEPTH TYPE BOX CULVERT (2 of 2)

SHEET NO. : DS-05

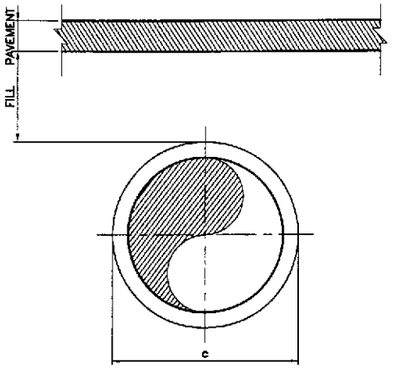

STANDARD STRENGTH PIPES:
FILL 1/2 E.D. FOR FLEXIBLE PAVEMENT OR MIN. OF 0.60 m
0.30 m FOR RIGID PAVEMENT
EXTRA STRENGTH PIPES:
FILL: 0.30 m FOR RIGID AND FLEXIBLE PAVEMENTS

MINIMUM PIPE COVERING

DESIGN REQUIREMENT OF REINFORCED CONCRETE PIPE CULVERT

SIZE OF PIPE (mm)	STANDARD STRENGTH REINFORCED CONCRETE PIPE CULVERTS — CONCRETE 247 kg/cm² (3,500 lb/in²)								CONCRETE 317 kg/cm² (4,500 lb/in²)								STRENGTH TEST REQUIREMENTS kg/m OF PIPE		EXTRA STRENGTH REINFORCED CONCRETE PIPE CULVERTS — CONCRETE 317 kg/cm² (4,500 lb/in²)								STRENGTH TEST REQUIREMENTS kg/m OF PIPE	
	WALL THICKNESS (mm)	TONGUE (mm)		GROOVE (mm)		DEPTH (mm)	MINIMUM REINFORCEMENT cm²/m OF PIPE		WALL THICKNESS (mm)	TONGUE (mm)		GROOVE (mm)		DEPTH (mm)	MINIMUM REINFORCEMENT cm²/m OF PIPE ⊕		THREE-EDGE-BEARING METHOD ✳		WALL THICKNESS (mm)	TONGUE (mm)		GROOVE (mm)		DEPTH (mm)	MINIMUM REINFORCEMENT cm²/m OF PIPE ○		THREE-EDGE-BEARING METHOD	
I.D.	t	A	B	C	E	P	CIRCULAR REINFORCEMENT	ELLIPTICAL REINFORCEMENT	t	A	B	C	E	P	CIRCULAR REINFORCEMENT	ELLIPTICAL REINFORCEMENT	0.00025mCRACK LOAD	ULTIMATE LOAD	t	A	B	C	E	P	CIRCULAR REINFORCEMENT	ELLIPTICAL REINFORCEMENT	0.00025mCRACK LOAD	LOAD ULTIMATE
300	57	344	363	351	370	44	1 LINE 1.48		51	495	514	502	521	44	1 LINE 1.69		3.355	5.218	—	—	—	—	—					
380	57	344	363	351	370	44	1 LINE 1.90		51	495	514	502	521	44	1 LINE 2.33		3.914	6.060	—	—	—	—	—					
460	64	508	527	514	534	44	1 LINE 2.54	1 LINE 2.12	51	495	514	502	521	44	1 LINE 2.96		4.473	6.709	—	—	—	—	—					
610	76	673	692	680	699	44	1 LINE 3.60	1 LINE 2.75	64	660	680	667	686	44	1 LINE 4.23	1 LINE 3.60	4.473	7.454	76	673	692	680	699	44	1 LINE 5.50	1 LINE 4.23	5.964	8.945
760	89	858	857	845	864	51	1 LINE 4.66	1 LINE 3.60	76	825	845	832	851	51	1 LINE 5.92	1 LINE 4.44	5.032	8.573	89	838	857	845	864	51	1 LINE 6.56	1 LINE 5.08	7.454	11.182
910	102	1003	1022	1010	1029	64	2 LINES EACH 3.81	1 LINE 3.81	86	988	1007	994	1013	64	2 LINES EACH 4.66	1 LINE 4.66	6.038	9.840	102	1003	1022	1010	1029	64	2 LINES EACH 5.92	1 LINE 5.92	8.945	13.418
1070	114	1168	1187	1175	1194	64	2 LINES EACH 4.44	1 LINE 4.44	95	1150	1185	1156	1175	64	2 LINES EACH 5.29	1 LINE 5.29	7.045	10.958	114	1168	1187	1175	1194	64	2 LINES EACH 6.98	1 LINE 6.98	10.436	15.655
1220	127	1334	1353	1340	1359	64	2 LINES EACH 5.29	1 LINE 5.29	108	1315	1334	1321	1340	64	2 LINES EACH 6.56	1 LINE 6.56	8.051	11.927	127	1334	1353	1340	1359	64	2 LINES EACH 8.04	1 LINE 8.04	11.927	17.891
1520	152	1664	1683	1670	1690	64	2 LINES EACH 6.98	1 LINE 6.98	127	1639	1658	1645	1664	64	2 LINES EACH 8.68	1 LINE 8.68	8.945	14.909	152	1664	1683	1670	1690	64	2 LINES EACH 10.58	1 LINE 10.58	13.418	22.364

⊕ THE DISTANCE FROM CENTERLINE OF THE REINFORCEMENT TO THE NEAREST SURFACE OF THE CONCRETE HAS BEEN ASSUMED AS 32mm FOR PIPES WITH A SHELL THICKNESS OF 64mm OR MORE.
✳ TEST LOADS FOR SAND-BEARING TEST SHALL BE ONE AND ONE – HALF TIMES THOSE SPECIFIED IN THIS TABLE FOR THE THREE – EDGE BEARING TEST.

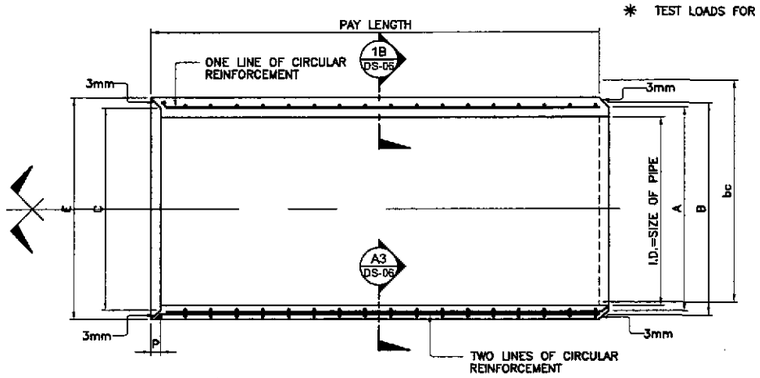

1A DS-06 LONGITUDINAL SECTION
NOT TO SCALE

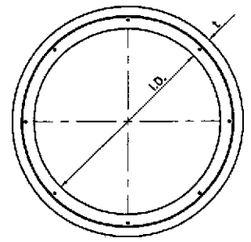

ONE LINE OF CIRCULAR REINFORCEMENT

1B DS-06 SECTION

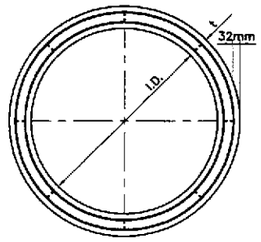

TWO LINES OF CIRCULAR REINFORCEMENT

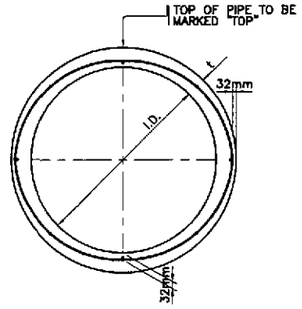

ONE LINE OF ELLIPTICAL REINFORCEMENT

1C DS-06 SECTION

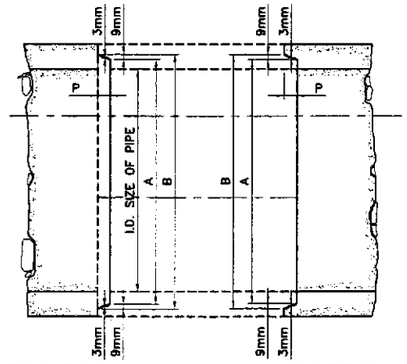

TONGUE END GROOVE END

1D DS-06 SECTION

1 DS-06 STANDARD REINFORCED CONCRETE PIPE CULVERTS
SCALE AS SHOWN

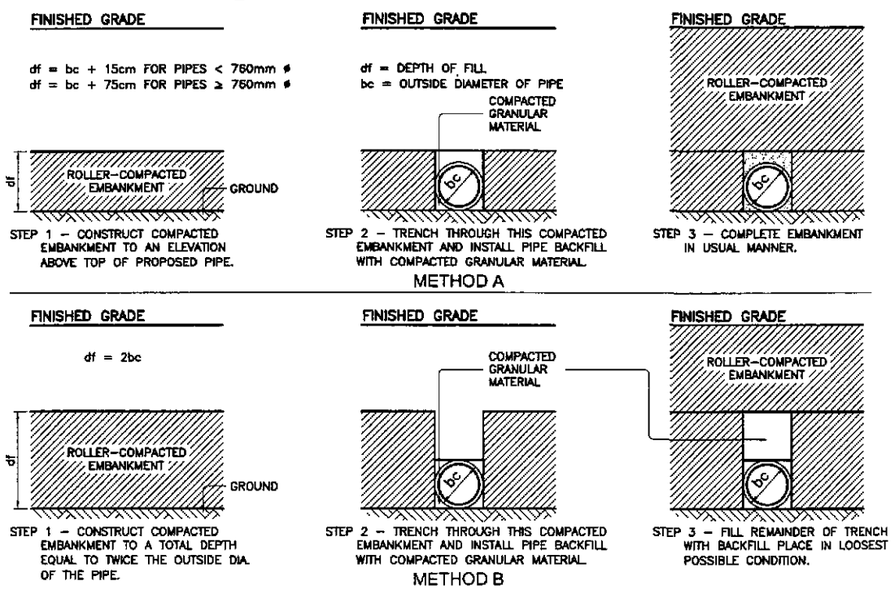

2 DS-06 METHODS OF PIPE INSTALLATION
NOT TO SCALE

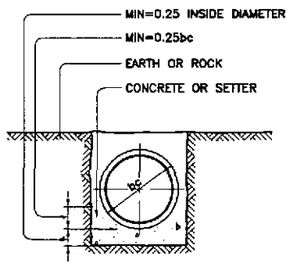

CONCRETE CRADLE BEDDING

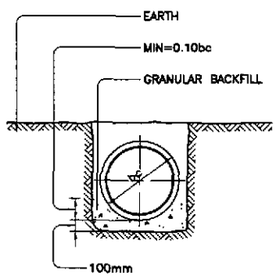

ORDINARY BEDDINGS

3 DS-06 TYPICAL BEDDING FOR CONDUITS
NOT TO SCALE

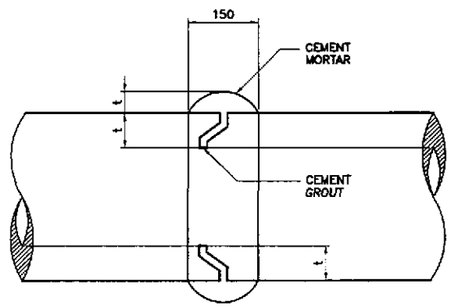

4 DS-06 DETAIL OF PIPE COLLAR
NOT TO SCALE

JICA
JAPAN INTERNATIONAL COOPERATION AGENCY
KEI KATAHIRA & ENGINEERS INTERNATIONAL
YEC YACHIYO ENGINEERING CO., LTD.

	DATE	SIGNATURE
DESIGNED	9/21/02	
CHECKED	9/23/02	
SUBMITTED	10/14/02	TEAM LEADER

REPUBLIC OF THE PHILIPPINES
DEPARTMENT OF PUBLIC WORKS AND HIGHWAYS

PUBL – PMO	BUREAU OF DESIGN		OFFICE OF THE SECRETARY	
Submitted By:	Reviewed By:	Recommended By:	Recommended By: (See cover sheet for Signature)	Approved By: (See cover sheet for Signature/Approval)
DANILO C. TRAJANO	JOSEFINA M. ALAGAR	GILBERTO S. REYES	MANUEL M. BONGAN	SIMEON A. DATUMANONG
Project Director	Chief, Highways Division	OIC, Director IV	Undersecretary	Secretary

PROJECT AND LOCATION :
THE DETAILED DESIGN STUDY ON UPGRADING INTER-URBAN HIGHWAY SYSTEM ALONG THE PAN-PHILIPPINE HIGHWAY (Plaridel, Cabanatuan and San Jose Bypasses)
PLARIDEL BYPASS - CONTRACT PACKAGE III

SCALE : AS SHOWN
FULL SIZE A1

SHEET CONTENTS :
STANDARD RCPC, METHOD OF PIPE INSTALLATION AND TYPICAL BEDDING FOR CONDUITS

SHEET NO. : DS-06

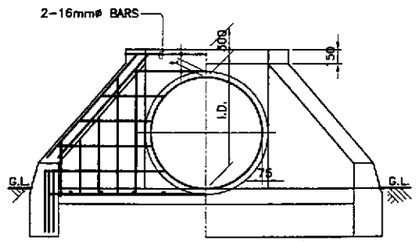

1B DS-07 ELEVATION
NOT TO SCALE

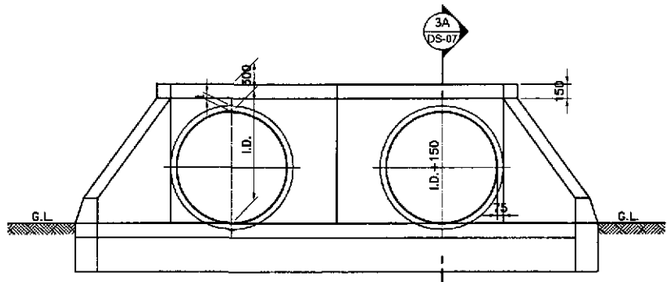

2B DS-07 ELEVATION
NOT TO SCALE

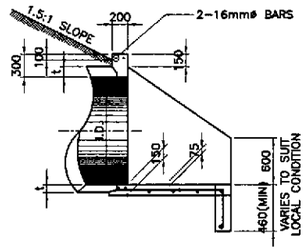

3A DS-07 SECTION
NOT TO SCALE

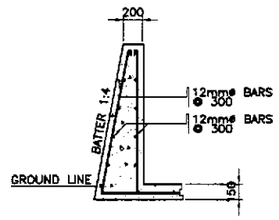

3B DS-07 SECTION
NOT TO SCALE

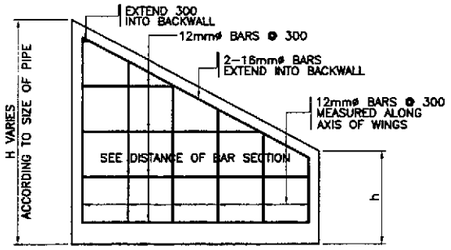

3C DS-07 SECTION
NOT TO SCALE

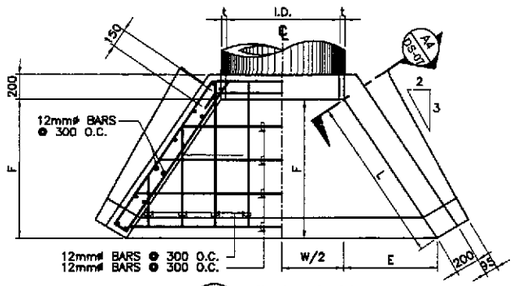

1A DS-07 PLAN
N T S

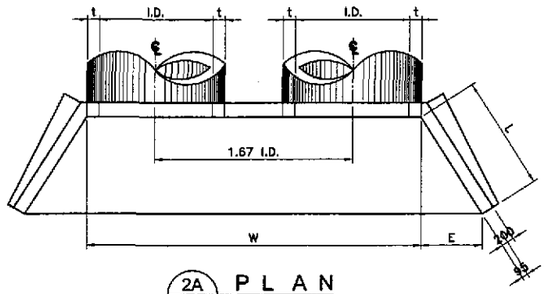

2A DS-07 PLAN
N T S

1 DS-07 FLARED TYPE HEADWALL (SINGLE PIPE)
SCALE AS SHOWN

2 DS-07 FLARED TYPE HEADWALL (DOUBLE PIPE)
SCALE AS SHOWN

TABLE A (ONE FLARED TYPE HEADWALL 1.5:1)

DIAMETER & THICKNESS (mm)		DIMENSIONS (mm)				SINGLE PIPE				DOUBLE PIPE				TRIPLE PIPE			
INTERNAL DIAMETER (I.D.)	MIN. THICKNESS SHELL (t)	L	E	F	h	AREA OF WATERWAY m^3	W (mm)	EST. OF QUANTITIES CONC. m^3	EST. OF QUANTITIES REINF. STEEL kg.	AREA OF WATERWAY m^2	W (mm)	EST. OF QUANTITIES CONC. m^3	EST. OF QUANTITIES REINF. STEEL kg.	AREA OF WATERWAY m^2	W (mm)	EST. OF QUANTITIES CONC. m^3	EST. OF QUANTITIES REINF. STEEL kg.
460	51	710	390	590	0	0.17	610	0.57	25.65	0.32	1380	0.83	37.35	0.51	2150	1.27	57.15
610	64	960	530	800	0	0.29	760	0.82	36.46	0.58	1780	1.16	48.39	0.87	2800	1.75	78.75
910	86	1510	840	1260	600	0.65	1070	1.55	68.92	1.30	2590	2.22	92.61	1.95	4100	3.36	150.98
1070	95	1770	980	1470	600	0.90	1230	2.38	107.10	1.80	3020	3.05	137.25	2.70	4800	3.96	178.20
1220	108	2040	1130	1690	600	1.17	1370	2.66	110.27	2.34	3400	3.71	154.77	3.51	5360	5.36	241.34
1520	127	2540	1410	2110	600	1.81	1680	3.93	174.74	3.63	4229	5.47	228.18	5.43	6760	6.76	304.20

TABLE C (ONE L-TYPE HEADWALL)

DIA. & THICKNESS (mm)		DIMENSIONS (mm)						SINGLE PIPE	
INTERNAL DIAMETER (I.D.)	MIN. THK. SHELL (t)	A	B	B'	H	W	L	CONCRETE m^3 mm	REINF. STEEL kg.
460	51	310	350	200	1070	1070	1070	0.66	6
610	64	410	430	200	1320	1220	1220	1.06	8
910	86	610	610	200	1820	1820	1820	2.76	11
1070	95	710	780	300	2080	1970	VARIES	–	–
1220	108	810	870	300	2330	2120	VARIES	–	–
1520	127	1010	980	300	3030	2420	VARIES	–	–

TABLE C (ONE STRAIGHT TYPE HEADWALL)

DIAMETER & THICKNESS (mm)		DIMENSIONS (mm)			SINGLE PIPE				DOUBLE PIPE				TRIPLE PIPE			
INTERNAL DIAMETER (I.D.)	MIN. THK. SHELL (t)	A	B	H	W (mm)	AREA OF WATERWAY m^2	CONCRETE m^3 mm	REINF. STEEL kg.	W (mm)	AREA OF WATERWAY m^2	CONCRETE m^3 mm	REINF. STEEL kg.	W (mm)	AREA OF WATERWAY m^2	CONCRETE m^3 mm	REINF. STEEL kg.
460	51	310	350	1070	1500	0.15	0.46	3.48	2600	0.33	0.63	4.90	3400	0.45	0.80	5.97
610	64	410	430	1320	2400	0.29	0.87	4.55	3500	0.58	1.20	6.50	4600	0.87	1.51	8.45
910	86	610	600	1820	3800	0.65	2.28	6.68	5200	1.30	3.16	9.52	6800	1.95	3.85	12.36
1070	95	710	780	2080	4300	0.90	3.84	7.57	6050	1.80	5.09	10.67	7900	2.70	6.43	13.96
1220	108	810	870	2330	4800	1.17	4.43	8.81	6900	2.34	6.70	12.54	9000	3.51	7.97	16.14
1520	127	1010	980	2830	6000	1.81	8.80	10.94	8600	3.63	11.93	15.56	11200	5.43	15.05	19.82

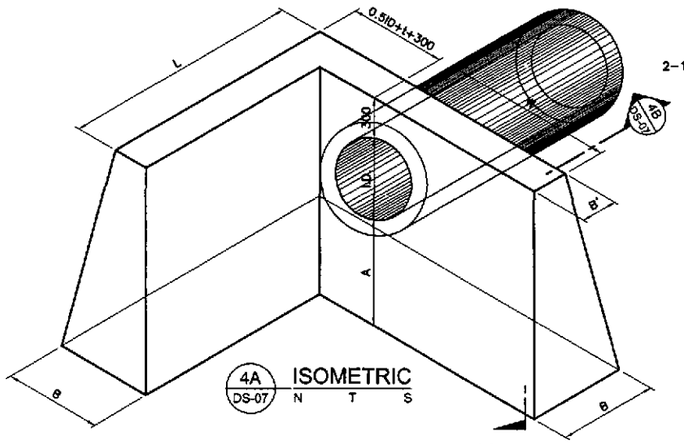

4A DS-07 ISOMETRIC
N T S

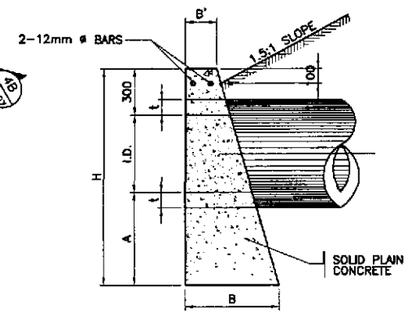

4B DS-07 SECTION
NOT TO SCALE

4 DS-07 L-TYPE HEADWALL
NOT AS SHOWN

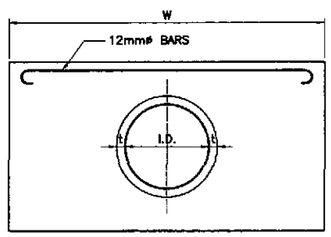

5A DS-07 SINGLE PIPE
NOT TO SCALE

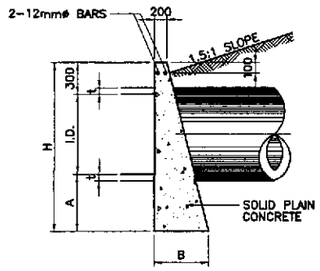

5B DS-07 SECTION
NOT TO SCALE

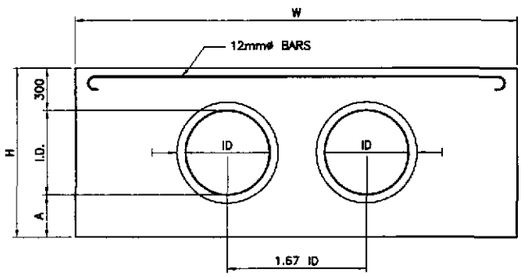

5C DS-07 DOUBLE PIPE
NOT TO SCALE
1-2/3 I.D.

5 DS-07 STRAIGHT TYPE HEADWALL
NOT AS SHOWN

STANDARD REINFORCED CONCRETE HEADWALL FOR RCPC

JICA
JAPAN INTERNATIONAL COOPERATION AGENCY
KEI KATAHIRA & ENGINEERS INTERNATIONAL
YEO YACHIYO ENGINEERING CO., LTD.

	DATE	SIGNATURE
DESIGNED	9/21/02	F. SAN MARIA
CHECKED	9/28/02	H. KAKIM
SUBMITTED	10/4/02	M. KUNDI TEAM LEADER

REPUBLIC OF THE PHILIPPINES
DEPARTMENT OF PUBLIC WORKS AND HIGHWAYS

PJHL – PMO	BUREAU OF DESIGN		OFFICE OF THE SECRETARY	
Submitted By:	Reviewed By:	Recommended By:	Recommended By: (See cover sheet for Signature)	Approved By: (See cover sheet for Signature/Approval)
DANILO C. TRAJANO Project Director	JOSEFINA M. ALAGAR Chief, Highways Division	GILBERTO S. REYES OIC, Director IV	MANUEL M. BONGAN Undersecretary	SIMEON A. DATUMANONG Secretary

PROJECT AND LOCATION :
THE DETAILED DESIGN STUDY ON UPGRADING INTER-URBAN HIGHWAY SYSTEM ALONG THE PAN-PHILIPPINE HIGHWAY (Plaridel, Cabanatuan and San Jose Bypasses)
PLARIDEL BYPASS - CONTRACT PACKAGE III

SCALE : NOT TO SCALE
FULL SIZE A1

SHEET CONTENTS : STANDARD REINFORCED CONCRETE HEADWALL FOR RCPC

SHEET NO. : DS-07

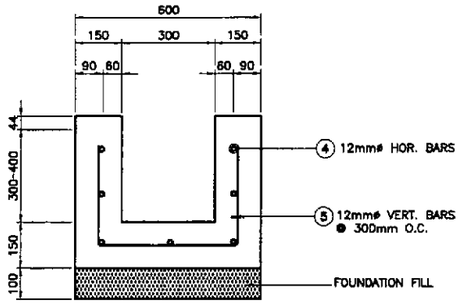

REINFORCED CONCRETE DITCH

1 / DS-08 TYPE BU
SCALE: 1:10

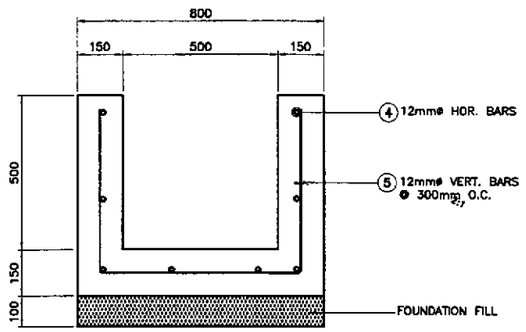

REINFORCED CONCRETE DITCH

2 / DS-08 TYPE U
SCALE: 1:10

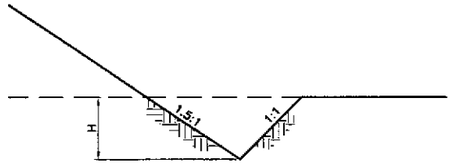

V-SHAPED UNLINED DITCH

TYPE E-4

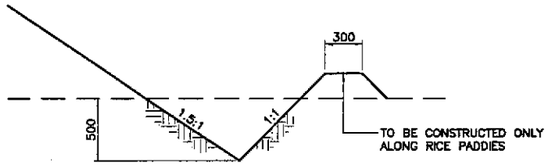

V-SHAPED UNLINED DITCH

TYPE E-3

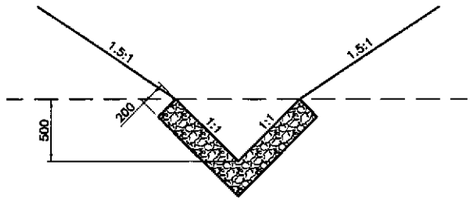

V-SHAPED LINED DITCH
(OUTER SEPARATOR DITCH)

TYPE E-2a

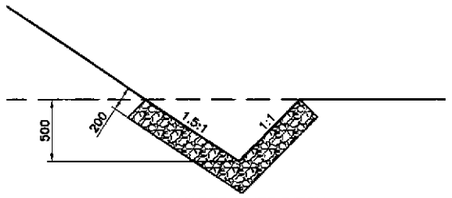

V-SHAPED LINED DITCH

TYPE E-2

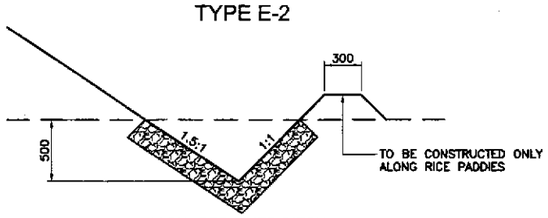

V-SHAPED LINED DITCH

TYPE E-1

3 / DS-08 TYPE E
SCALE: 1:25

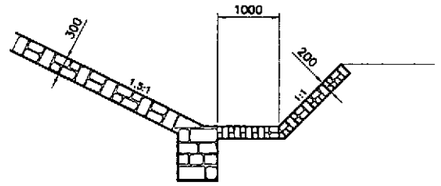

TYPE C-4

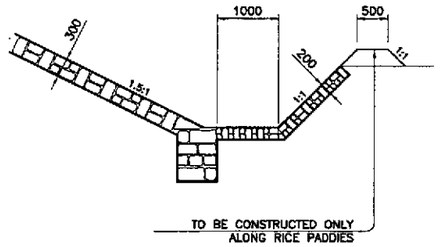

TYPE C-3

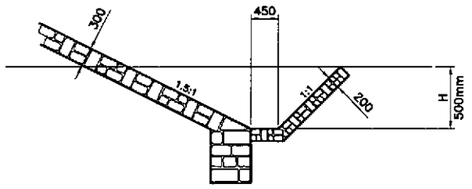

TYPE C-2

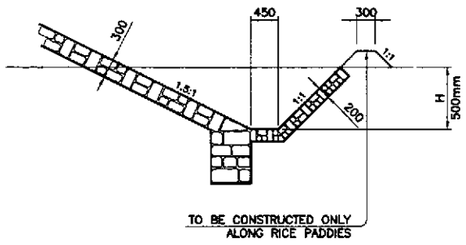

TYPE C-1

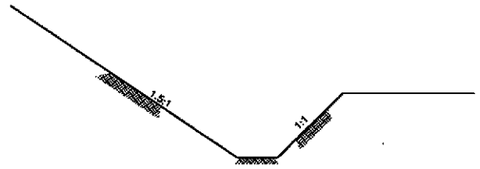

TYPE C-8

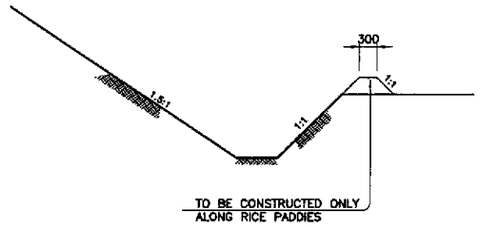

TYPE C-7

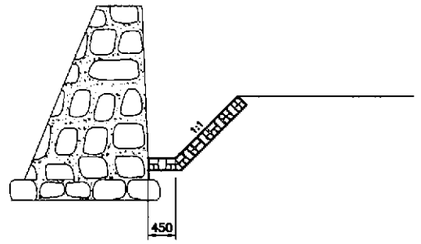

TYPE C-6

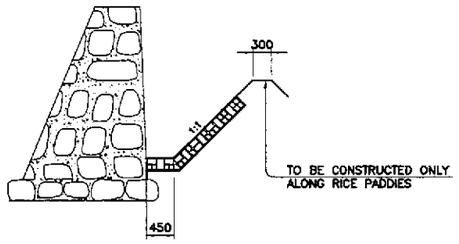

TYPE C-5

4 / DS-08 TYPE C
NOT TO SCALE

STANDARD DRAINAGE DITCHES

		DATE	SIGNATURE
JICA JAPAN INTERNATIONAL COOPERATION AGENCY	DESIGNED	9/21/02	F. STIO HAKIM
KATAHIRA & ENGINEERS INTERNATIONAL / YACHIYO ENGINEERING CO., LTD.	CHECKED	9/23/02	F. STIO HAKIM
	SUBMITTED	10/14/02	Mr. Kenichi TEAM LEADER

REPUBLIC OF THE PHILIPPINES
DEPARTMENT OF PUBLIC WORKS AND HIGHWAYS

FUHL – PMO	BUREAU OF DESIGN		OFFICE OF THE SECRETARY	
Submitted By:	Reviewed By:	Recommended By:	Recommended By: (See cover sheet for Signature)	Approved By: (See cover sheet for Signature/Approval)
DANILO C. TRAJANO	JOSEFINA M. ALAGAR	GILBERTO S. REYES	MANUEL M. BONGAN	SIMEON A. DATUMANONG
Project Director	Chief, Highways Division	OIC, Director IV	Undersecretary	Secretary

PROJECT AND LOCATION :	SCALE :	SHEET CONTENTS :	SHEET NO. :
THE DETAILED DESIGN STUDY ON UPGRADING INTER-URBAN HIGHWAY SYSTEM ALONG THE PAN-PHILIPPINE HIGHWAY (Plaridel, Cabanatuan and San Jose Bypasses)	NOT TO SCALE	STANDARD DRAINAGE DITCHES	DS-08
PLARIDEL BYPASS - CONTRACT PACKAGE III	FULL SIZE A1		

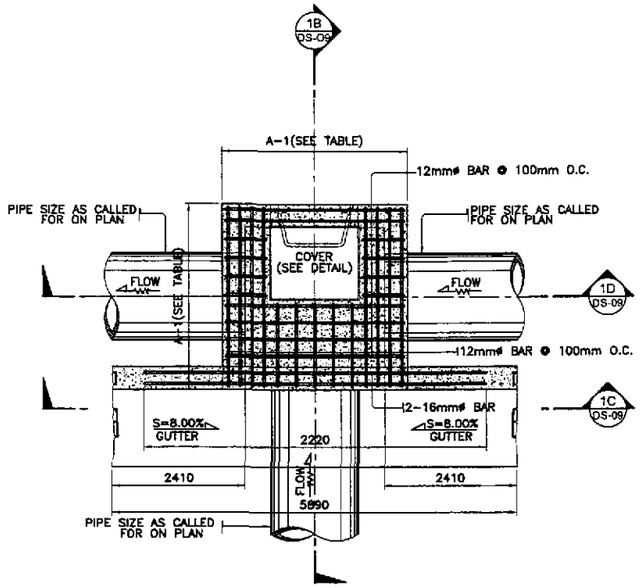

1A DS-09 PLAN

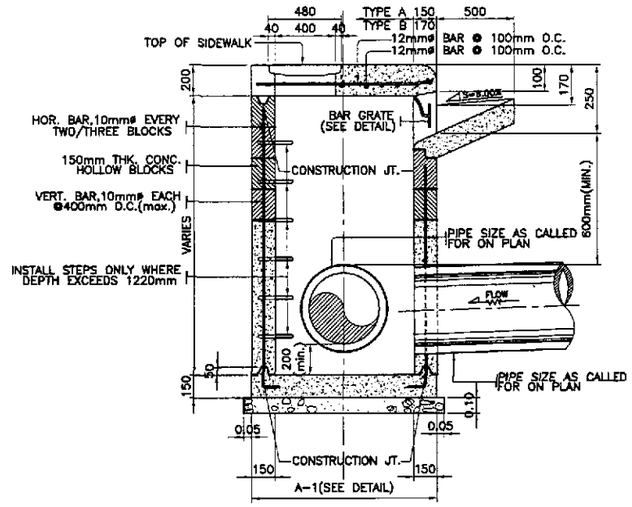

1B DS-09 SECTION

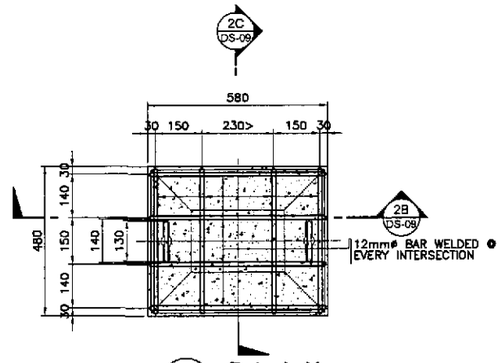

2A DS-09 PLAN

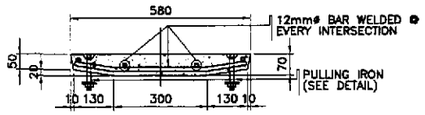

2B DS-09 SECTION

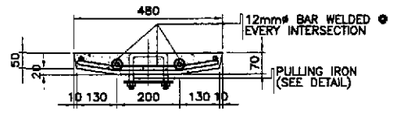

2C DS-09 SECTION

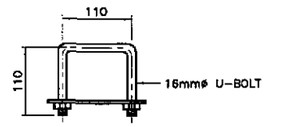

3A DS-09 PLAN

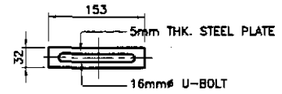

3B DS-09 ELEVATION

3 DS-09 PULLING IRON DETAIL
SCALE 1:5

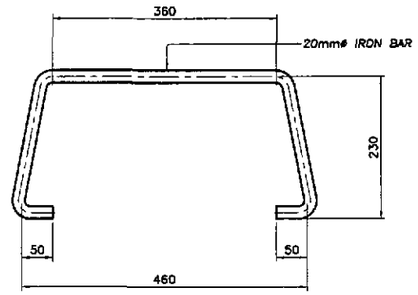

4 DS-09 STEP
SCALE 1:5

2 DS-09 CONCRETE COVER DETAIL
SCALE 1:10

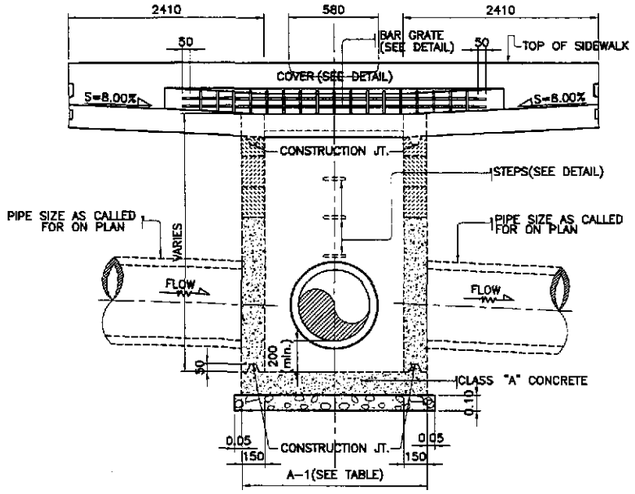

1C DS-09 SECTION
1:20

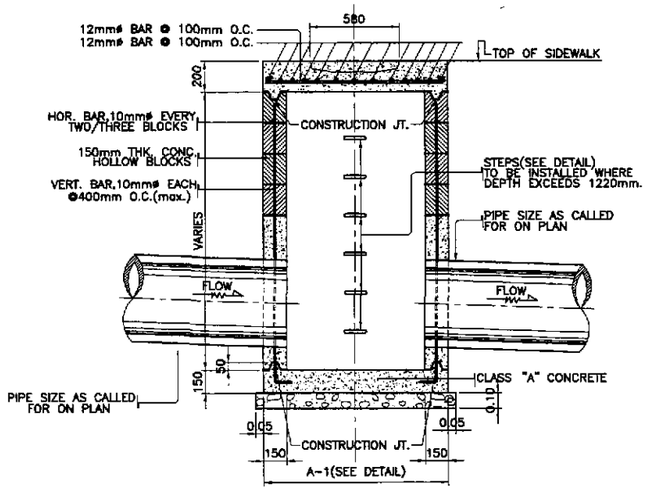

1D DS-09 SECTION

1 DS-09 CURB INLET MANHOLE
SCALE 1:20

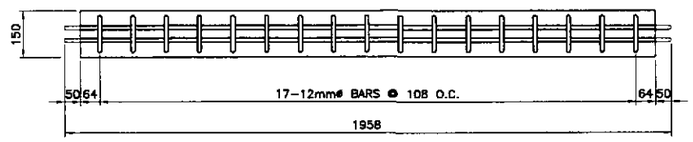

5 DS-09 DETAIL OF BAR GRATE FOR OPENING OF CURB INLET
SCALE 1:20

TABLE OF DIMENSION		
TYPE OF CIM	SIZE OF PIPE (mm)	A-1
T-1	300	1.12 M.
T-2	460	1.19 M.
T-3	610	1.37 M.
T-4	760	1.54 M.
T-5	910	1.73 M.
T-6	1070	1.90 M.
T-7	1220	2.08 M.
T-8	1520	2.43 M.

NOTES:

1. ALL CONCRETE SHALL BE CLASS "A". EXPOSED EDGES SHALL BE FINISHED WITH SUITABLE EDGER.
2. PULLING IRON, STEPS AND BAR GRATE SHALL BE PAINTED WITH ONE COAT OF ZINC CHROMATE.
3. CONSTRUCTION JOINTS SHALL CONFORM WITH THE GROOVES OF CONCRETE HOLLOW BLOCKS.
4. CONCRETE HOLLOW BLOCKS OR DRESSED ADOBE BLOCKS SHALL HAVE AN AVERAGE COMPRESSIVE STRENGTH OF 6.865MPa.
5. IN CONCRETE HOLLOW BLOCKS STRUCTURE, ALL HOLES SHALL BE FILLED WITH CEMENT MORTAR.
6. WHERE CONCRETE HOLLOW BLOCKS STRUCTURES ATTAIN A HEIGHT OF 1.20 METER, IT SHALL BE REINFORCED STEEL BARS SPACE AT NOT MORE THAN 0.60 M. O.C. BOTHWAYS.
7. INSTALL STEPS ONLY WHERE DEPTH EXCEEDS 1.22 METERS.

DETAILS OF COMBINATION CURB INLET MANHOLE

JICA
JAPAN INTERNATIONAL COOPERATION AGENCY
KEI KATAHIRA & ENGINEERS INTERNATIONAL
YEC YACHIYO ENGINEERING CO., LTD.

	DATE	SIGNATURE
DESIGNED	9/21/02	A. STA. MARIA
CHECKED	9/23/02	A. HAKIM
SUBMITTED	10/14/02	K. OGUCHI, TEAM LEADER

REPUBLIC OF THE PHILIPPINES
DEPARTMENT OF PUBLIC WORKS AND HIGHWAYS

PJHL – PMO	BUREAU OF DESIGN		OFFICE OF THE SECRETARY	
Submitted By:	Reviewed By:	Recommended By:	Recommended By: (See cover sheet for Signature)	Approved By: (See cover sheet for Signature/Approval)
DANILO C. TRAJANO	JOSEFINA M. ALAGAR	GILBERTO S. REYES	MANUEL M. BONGAN	SIMEON A. DATUMANONG
Project Director	Chief, Highways Division	OIC, Director IV	Undersecretary	Secretary

PROJECT AND LOCATION :
THE DETAILED DESIGN STUDY ON UPGRADING INTER-URBAN HIGHWAY SYSTEM ALONG THE PAN-PHILIPPINE HIGHWAY (Plaridel, Cabanatuan and San Jose Bypasses)
PLARIDEL BYPASS - CONTRACT PACKAGE III

SCALE : AS SHOWN
FULL SIZE A1

SHEET CONTENTS : STANDARD COMBINATION CURB INLET MANHOLE

SHEET NO. : DS-09

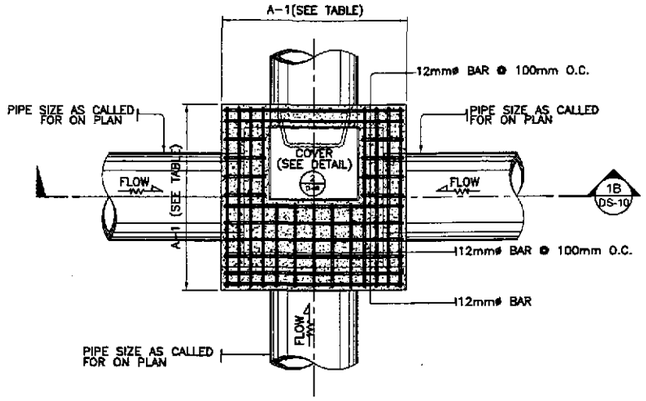

1A DS-10 PLAN BOX-TYPE MANHOLE (SINGLE PIPE)

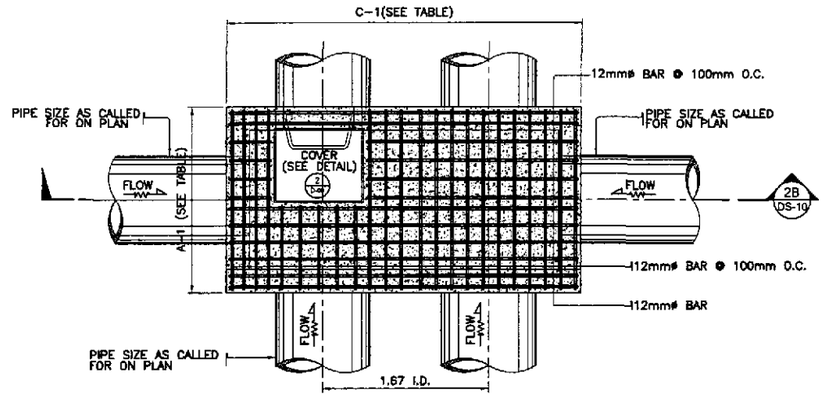

2A DS-10 PLAN BOX-TYPE MANHOLE (DOUBLE PIPE)

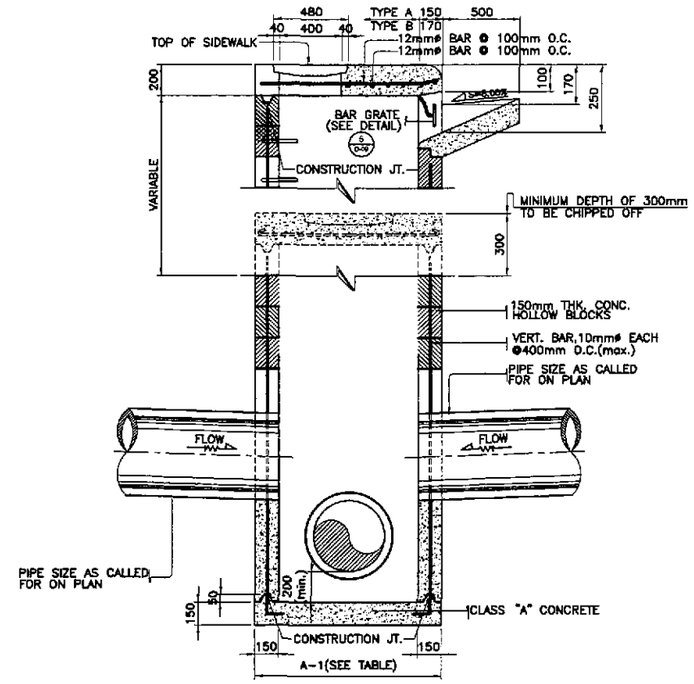

3 DS-10 BOX-TYPE CONVERTED TO CURB INLET MANHOLE

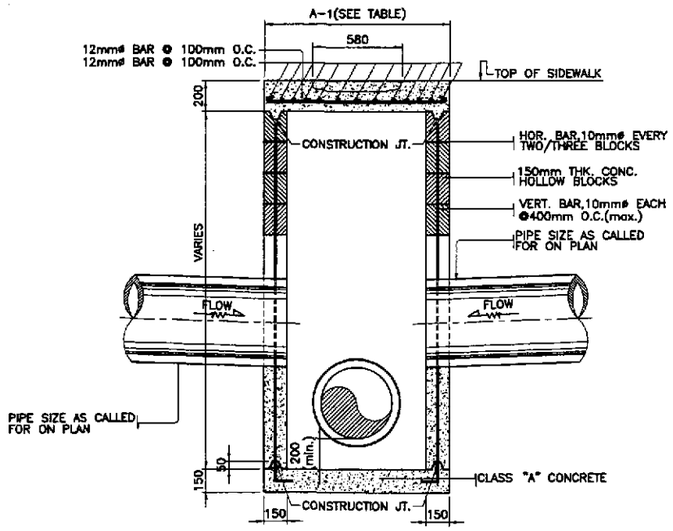

1B DS-10 SECTION

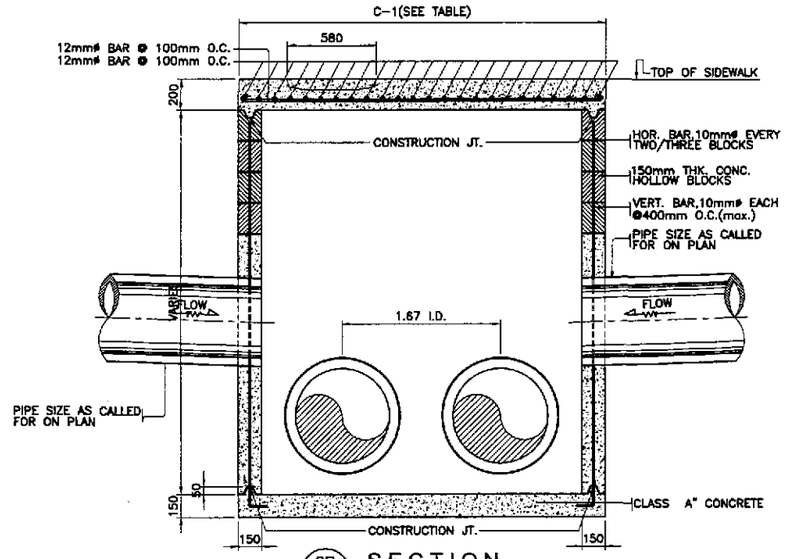

2B DS-10 SECTION

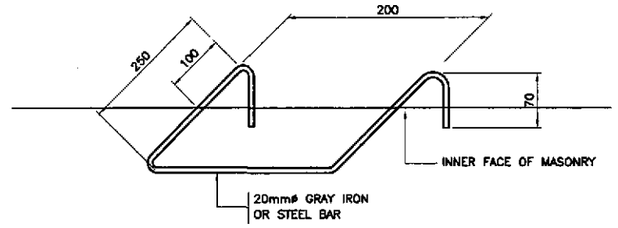

4 DS-10 STD. STEP OR RUNG

NOTES:

1. ALL CONCRETE SHALL BE CLASS "A". EXPOSED EDGES SHALL BE FINISHED WITH SUITABLE EDGER.
2. PULLING IRON, STEPS AND BAR GRATE SHALL BE PAINTED WITH ONE COAT OF ZINC CHROMATE.
3. CONSTRUCTION JOINTS SHALL CONFORM WITH THE GROOVES OF CONCRETE HOLLOW BLOCKS.
4. CONCRETE HOLLOW BLOCKS OR DRESSED ADOBE BLOCKS SHALL HAVE AN AVERAGE COMPRESSIVE STRENGTH OF 6.865MPa.
5. IN CONCRETE HOLLOW BLOCKS STRUCTURE, ALL HOLES SHALL BE FILLED WITH CEMENT MORTAR.
6. WHERE CONCRETE HOLLOW BLOCKS STRUCTURES ATTAIN A HEIGHT OF 1.20 METER, IT SHALL BE REINFORCED STEEL BARS SPACE AT NOT MORE THAN 0.60 M. O.C. BOTHWAYS.
7. INSTALL STEPS ONLY WHERE DEPTH EXCEEDS 1.22 METERS.
8. 150 mm BOTTOM SLAB THICKNESS FOR HEIGHT OF 1000 TO 4000mm. AND 200mm. FOR 5000 TO 8000mm IN HIEGHT.
9. FROM THE HEIGHT OF 3000 TO 8000mm. THE FIRST 2000mm, FROM THE TOP IS CHB WITH DETAILS FOR 2000mm HEIGHT.
10. REINFORCEMENT FOR BOTTOM SLAB ARE ALL 10mmø @ 400 B.W.
11. VERTICAL BARS ARE CUT AT HALF POINT FOR EVERY OTHER BAR AT SOLID WALL.
12. INSIDE SURFACES AND OUTSIDE SURFACES OF ALL MASONRY SHALL HAVE A PLASTER COAT 1/2" THICK.
13. BOX TYPE MANHOLE SHAL NOT BE CONSTRUCTED WITHIN THE RIDING SURFACE.

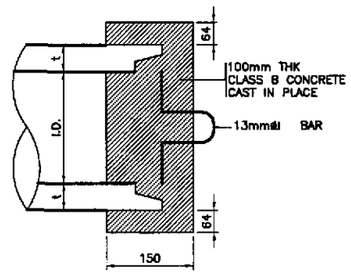

5 DS-10 CONCRETE BLOCK PLUG @ SUBSURFACE PIPE

TABLE OF MANHOLE

(H) HEIGHT mm.	(T) THICKNESS OF WALL (mm)	VERTICAL BARS			HORIZONTAL BARS
		INSIDE EDGE	CENTER	OUTSIDE EDGE	
1000	150mm CHB	–	10mmø @ 200	–	10mmø @ 400
2000	150mm CHB	–	12mmø @ 200	–	10mmø @ 400
3000	180mm CONC.	20mmø @ 300	–	32mmø @ 300	10mmø @ 400
4000	230mm CONC.	20mmø @ 250	–	32mmø @ 250	10mmø @ 400
5000	280mm CONC.	20mmø @ 225	–	32mmø @ 225	10mmø @ 400
6000	330mm CONC.	20mmø @ 200	–	32mmø @ 200	10mmø @ 400
7000	380mm CONC.	20mmø @ 175	–	32mmø @ 175	10mmø @ 400
8000	410mm CONC.	20mmø @ 150	–	32mmø @ 150	10mmø @ 400

TABLE OF DIMENSION

TYPE OF CIM	SIZE OF PIPE (mm)	A-1 (m)	C-1 (m)
T-1	300	1.12	1.92
T-2	460	1.19	2.25
T-3	610	1.37	2.69
T-4	760	1.54	3.11
T-5	910	1.73	3.55
T-6	1070	1.90	3.98
T-7	1220	2.08	4.42
T-8	1520	2.43	5.27

SPECIAL JUNCTION BOX MANHOLE

JICA
JAPAN INTERNATIONAL COOPERATION AGENCY
KEI KATAHIRA & ENGINEERS INTERNATIONAL
YEC YACHIYO ENGINEERING CO., LTD.

	DATE	SIGNATURE
DESIGNED	9/21/02	F. SYA MARIA
CHECKED	9/23/02	A. HAKIM
SUBMITTED	10/11/02	M. DATUMANONG TEAM LEADER

REPUBLIC OF THE PHILIPPINES
DEPARTMENT OF PUBLIC WORKS AND HIGHWAYS

PJHL – PMO	BUREAU OF DESIGN		OFFICE OF THE SECRETARY	
Submitted By:	Reviewed By:	Recommended By:	Recommended By: (See cover sheet for Signature)	Approved By: (See cover sheet for Signature/Approval)
DANILO C. TRAJANO	JOSEFINA M. ALAGAR	GILBERTO S. REYES	MANUEL M. BONOAN	SIMEON A. DATUMANONG
Project Director	Chief, Highways Division	OIC, Director IV	Undersecretary	Secretary

PROJECT AND LOCATION :	SCALE :	SHEET CONTENTS :	SHEET NO. :
THE DETAILED DESIGN STUDY ON UPGRADING INTER-URBAN HIGHWAY SYSTEM ALONG THE PAN-PHILIPPINE HIGHWAY (Plaridel, Cabanatuan and San Jose Bypasses)	AS SHOWN	SPECIAL JUNCTION BOX MANHOLE	DS-10
PLARIDEL BYPASS - CONTRACT PACKAGE III	FULL SIZE A1		

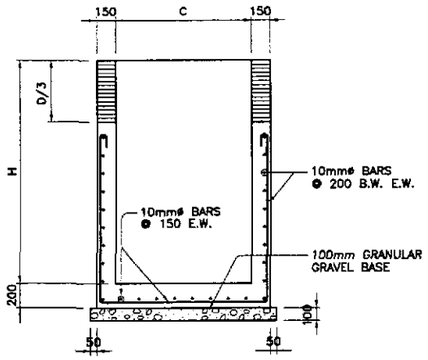

1C DS-11 SECTION

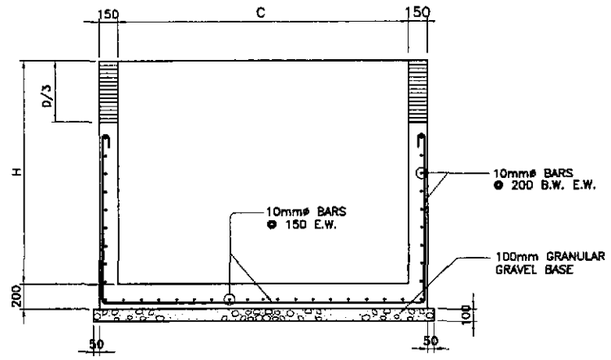

2C DS-11 SECTION

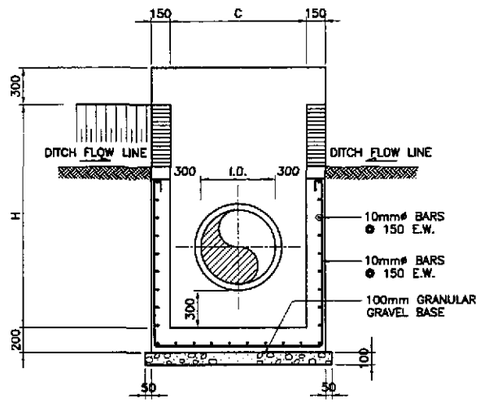

1B DS-11 SECTION

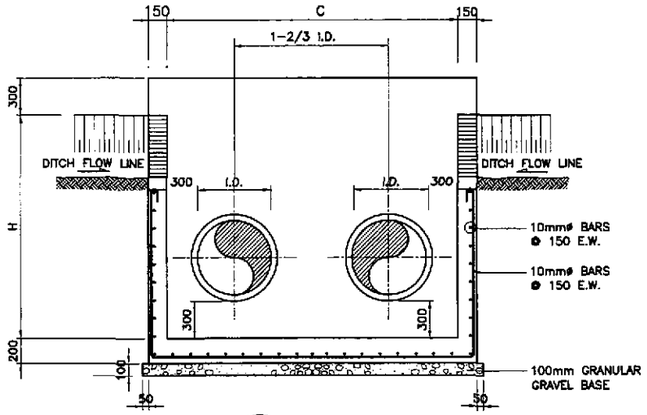

2B DS-11 SECTION

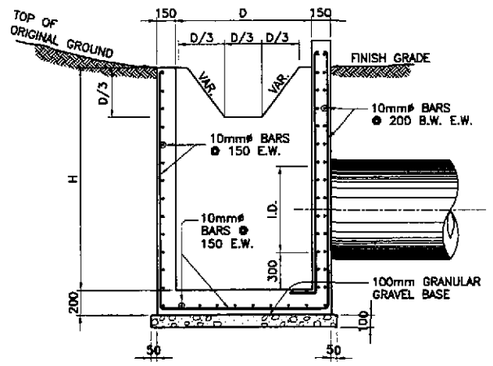

1C DS-11 SECTION

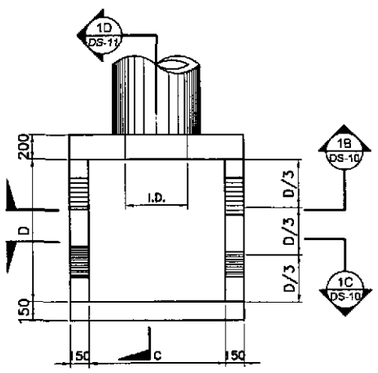

1A DS-11 PLAN

1 DS-11 CONCRETE CATCH BASIN (SINGLE PIPE)

SCALE 1:25

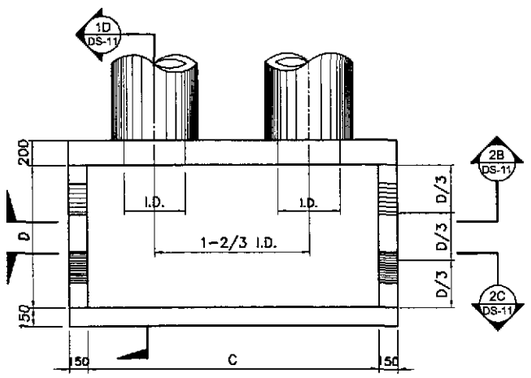

2A DS-11 PLAN

2 DS-11 CONCRETE CATCH BASIN (DOUBLE PIPE)

SCALE 1:25

REINFORCED CONCRETE CATCH BASIN DIMENSION FOR RCPC

PIPE DIAMETER (mm)		610	910	1070	1220	1520
COMMON TO ALL NUMBER OF BARRELS	H	1.910	2.210	2.370	2.520	2.820
	D	1.200	1.500	1.650	1.800	2.100
SINGLE	C	1.210	1.510	1.670	1.820	2.120
DOUBLE	C	2.230	3.030	3.460	3.860	4.660
TRIPLE	C	3.250	4.550	5.240	5.890	7.120

DETAILS OF REINFORCED CONCRETE CATCH BASIN FOR RCPC

JICA
JAPAN INTERNATIONAL COOPERATION AGENCY
KEI KATAHIRA & ENGINEERS INTERNATIONAL
YEO YACHIYO ENGINEERING CO., LTD.

	DATE	SIGNATURE
DESIGNED	9/21/02	F. STA. MARIA
CHECKED	9/23/02	H. MAROM
SUBMITTED	9/24/02	TEAM LEADER

REPUBLIC OF THE PHILIPPINES
DEPARTMENT OF PUBLIC WORKS AND HIGHWAYS

PJHL - PMO	BUREAU OF DESIGN		OFFICE OF THE SECRETARY	
Submitted By:	Reviewed By:	Recommended By:	Recommended By: (See cover sheet for Signature)	Approved By: (See cover sheet for Signature/Approval)
DANILO C. TRAJANO	JOSEFINA M. ALAGAR	GILBERTO S. REYES	MANUEL M. BONOAN	SIMEON A. DATUMANONG
Project Director	Chief, Highways Division	OIC, Director IV	Undersecretary	Secretary

PROJECT AND LOCATION :	SCALE :	SHEET CONTENTS :	SHEET NO. :
THE DETAILED DESIGN STUDY ON UPGRADING INTER-URBAN HIGHWAY SYSTEM ALONG THE PAN-PHILIPPINE HIGHWAY (Plaridel, Cabanatuan and San Jose Bypasses)	1:25	STANDARD REINFORCED CONCRETE CATCH BASIN FOR RCPC	DS-11
PLARIDEL BYPASS - CONTRACT PACKAGE I	FULL SIZE A1		

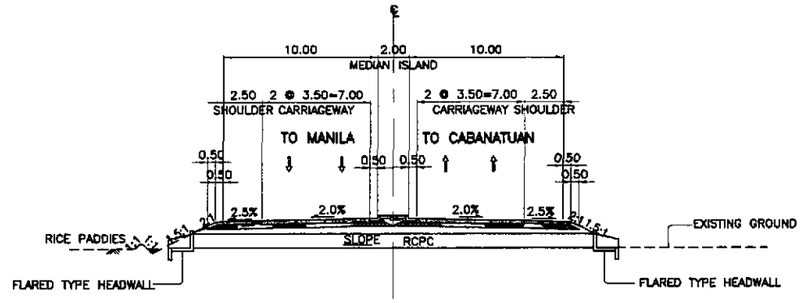

1 DS-12 TYPICAL DRAINAGE SECTION (ULTIMATE STAGE)

SCALE 1:200

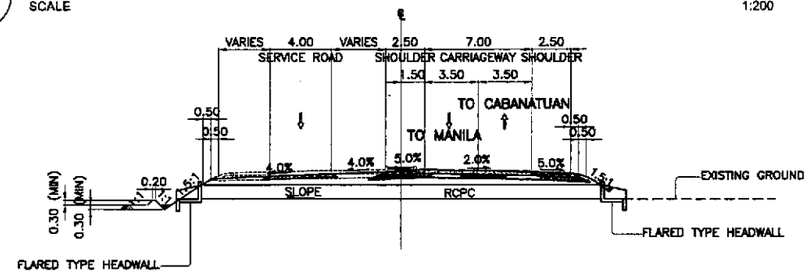

2 DS-12 TYPICAL DRAINAGE SECTION (INITIAL STAGE)

SCALE 1:200

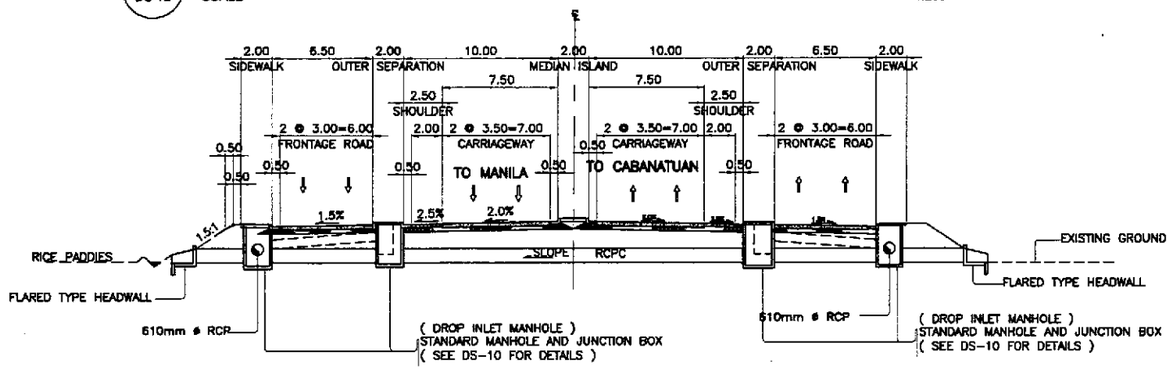

TYPICAL DRAINAGE SECTION WITH CURB INLET MANHOLE
(ULTIMATE STAGE)

3 DS-12 SCALE 1:200

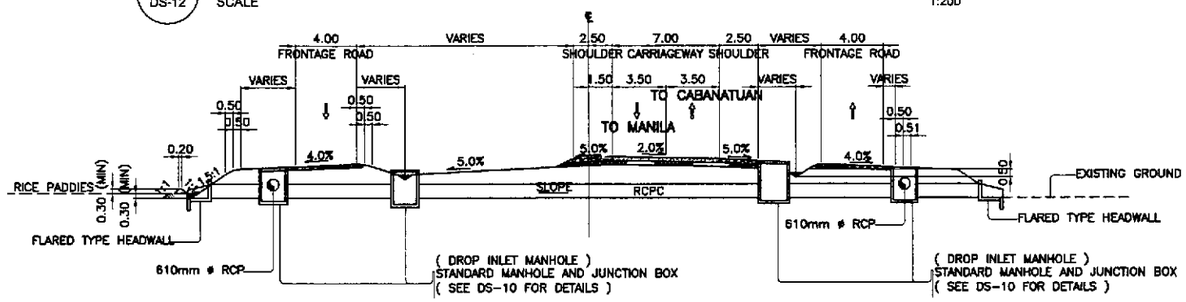

TYPICAL DRAINAGE SECTION WITH DROP INLET MANHOLE
(INITIAL STAGE)

4 DS-12 SCALE 1:200

JICA
JAPAN INTERNATIONAL COOPERATION AGENCY
KEI KATAHIRA & ENGINEERS INTERNATIONAL
YEC YACHIYO ENGINEERING CO., LTD.

	DATE	SIGNATURE
DESIGNED	9/20/02	E. STA. MARIA
CHECKED	9/25/02	M. HAKIM
SUBMITTED	10/14/02	M. MORIMI / TEAM LEADER

REPUBLIC OF THE PHILIPPINES
DEPARTMENT OF PUBLIC WORKS AND HIGHWAYS

PJHL – PMO	BUREAU OF DESIGN		OFFICE OF THE SECRETARY	
Submitted By:	Reviewed By:	Recommended By:	Recommended By: (See cover sheet for Signature)	Approved By: (See cover sheet for Signature/Approval)
DANILO C. TRAJANO	JOSEFINA M. ALAGAR	GILBERTO S. REYES	MANUEL M. DONOAN	SIMEON A. DATUMANONG
Project Director	Chief, Highways Division	DIC, Director IV	Undersecretary	Secretary

PROJECT AND LOCATION :
THE DETAILED DESIGN STUDY ON UPGRADING INTER-URBAN HIGHWAY SYSTEM ALONG THE PAN-PHILIPPINE HIGHWAY (Plaridel, Cabanatuan and San Jose Bypasses)
PLARIDEL BYPASS - CONTRACT PACKAGE III

SCALE : NOT TO SCALE
FULL SIZE A1

SHEET CONTENTS :
TYPICAL DRAINAGE SECTIONS WITH MANHOLE
(INITIAL and ULTIMATE STAGE)

SHEET NO. : DS-12

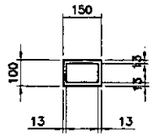

PLAN (POST)

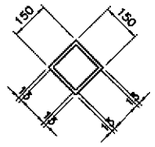

PLAN (POST)

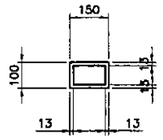

PLAN (POST)

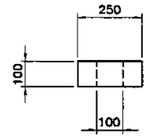

PLAN (POST)

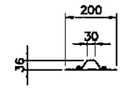

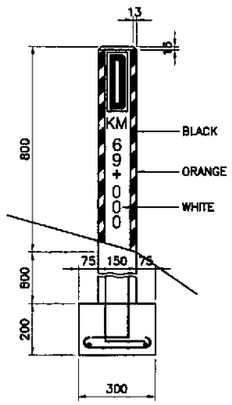

ELEVATION
CONCRETE MARKER
TYPE I-a

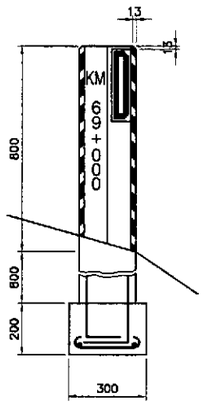

ELEVATION
CONCRETE MARKER
TYPE I-b

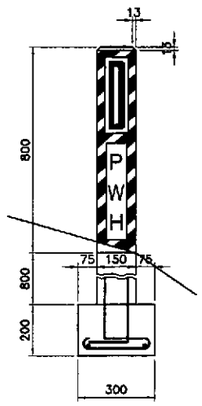

ELEVATION
CONCRETE MARKER
TYPE I-c

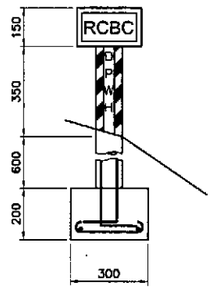

ELEVATION
CONCRETE MARKER
TYPE I-d

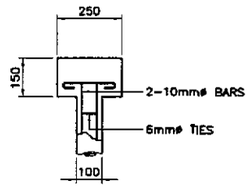

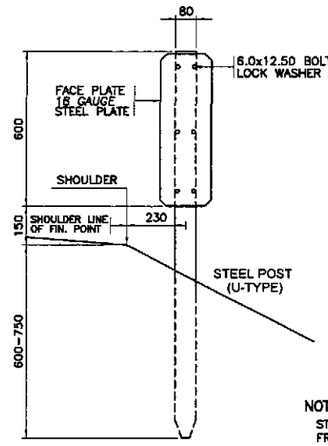

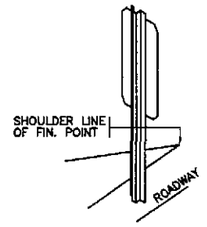

ISOMETRIC VIEW

NOTE:
STEEL POST MAY BE CHANNEL TAKEN FROM UNUSED BAILEY PANNELS MARKINGS AND PAINTINGS SAME AS FOR TYPE I AND TYPE II AS SHOWN.

ELEVATION
STEEL MARKER
TYPE II

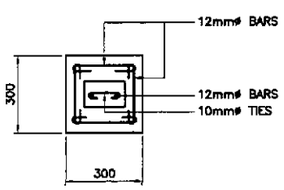

TYPICAL FOOTING DETAIL
CONCRETE MARKER
(TYPE I-a,b,c,d)

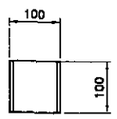

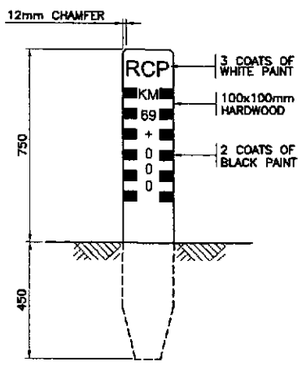

ELEVATION
WOODEN MARKER
TYPE III-a

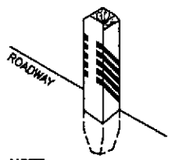

NOTE:
FACING ROADWAY STAKED AT CENTER LINE OF DRAINAGE 254mm AWAY FROM SHOULDER LINE OF FINAL POINT.

ISOMETRIC VIEW

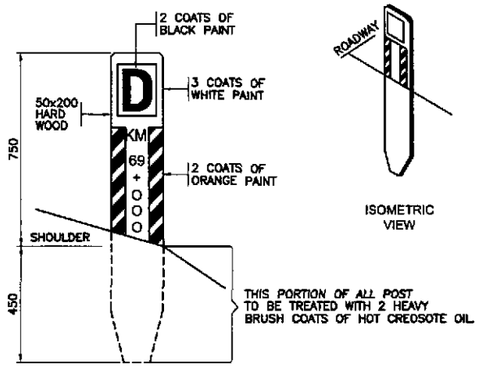

ISOMETRIC VIEW

ELEVATION
WOODEN MARKER
TYPE III-b

GENERAL NOTES

CONCRETE:
ALL CONCRETE TO BE CLASS "A" AND EXPOSED TOP TO BE CHAMFERED 13.0mm. ALL CONCRETE SHALL POURED IN THE DRY.

REINFORCING STEEL:
UNLESS OTHERWISE SHOWN ALL BAR SPACINGS ARE TO THE CENTER OF BARS AND THE MINIMUM COVERING OF BARS MEASURED FROM THE SURFACE OF THE CONCRETE TO THE FACE OF ANY BARS SHALL BE 50.0mm.

MARKINGS:
ALL RECESSED LETTERS SHALL BE CAST INTO CONCRETE AND ALL NUMBERS SHALL BE PAINTED AS SHOWN USING LETTER AND NUMBER FORM.

PAINTINGS:
ALL CONCRETE POSTS, TWO COATS OF WHITE PAINT. ALL RECESSED LETTERS ONE (1) COAT OF BLACK PAINT AND ALL BACKGOUND STRIPE SHALL BE ONE (1) COAT OF BLACK/ORANGE GLOSSED PAINT. ALL STRUCTURAL PLATES TWO COATS WHITE SHARP PAINT.

LOCATION:
DRAINAGE CULVERT MARKER TO BE SET AT SHOULDER LINE AND AT CENTER LINE OF CULVERT FACING TRAFFIC/ROADWAY AS SHOWN AND AS STAKED BY ENGINEERS.

DIMENSION:
ALL DIMENSIONS ARE IN MILLIMETERS UNLESS OTHERWISE STATED.

A
DS-13

STANDARD MAINTENANCE MARKERS

NOT TO SCALE

JICA
JAPAN INTERNATIONAL COOPERATION AGENCY
KEI KATAHIRA & ENGINEERS INTERNATIONAL
YEC YACHIYO ENGINEERING CO., LTD.

	DATE	SIGNATURE
DESIGNED	9/21/02	F. STA. MARIA
CHECKED	9/28/02	A. HAKIM
SUBMITTED	10/24/02	TEAM LEADER

REPUBLIC OF THE PHILIPPINES
DEPARTMENT OF PUBLIC WORKS AND HIGHWAYS

PJHL – PMO	BUREAU OF DESIGN		OFFICE OF THE SECRETARY	
Submitted By:	Reviewed By:	Recommended By:	Recommended By: (See cover sheet for Signature)	Approved By: (See cover sheet for Signature/Approval)
DANILO C. TRAJANO	JOSEFINA M. ALAGAR	GILBERTO S. REYES	MANUEL M. BONDAN	SIMEON A. DATUMANONG
Project Director	Chief, Highways Division	DIC, Director IV	Undersecretary	Secretary

PROJECT AND LOCATION :
THE DETAILED DESIGN STUDY ON UPGRADING INTER-URBAN HIGHWAY SYSTEM ALONG THE PAN-PHILIPPINE HIGHWAY (Plaridel, Cabanatuan and San Jose Bypasses)
PLARIDEL BYPASS - CONTRACT PACKAGE III

SCALE : NOT TO SCALE
FULL SIZE A1

SHEET CONTENTS : STANDARD MAINTENANCE MARKERS

SHEET NO. : DS-13

UNDERPASS CROSSING (BOX CULVERT)

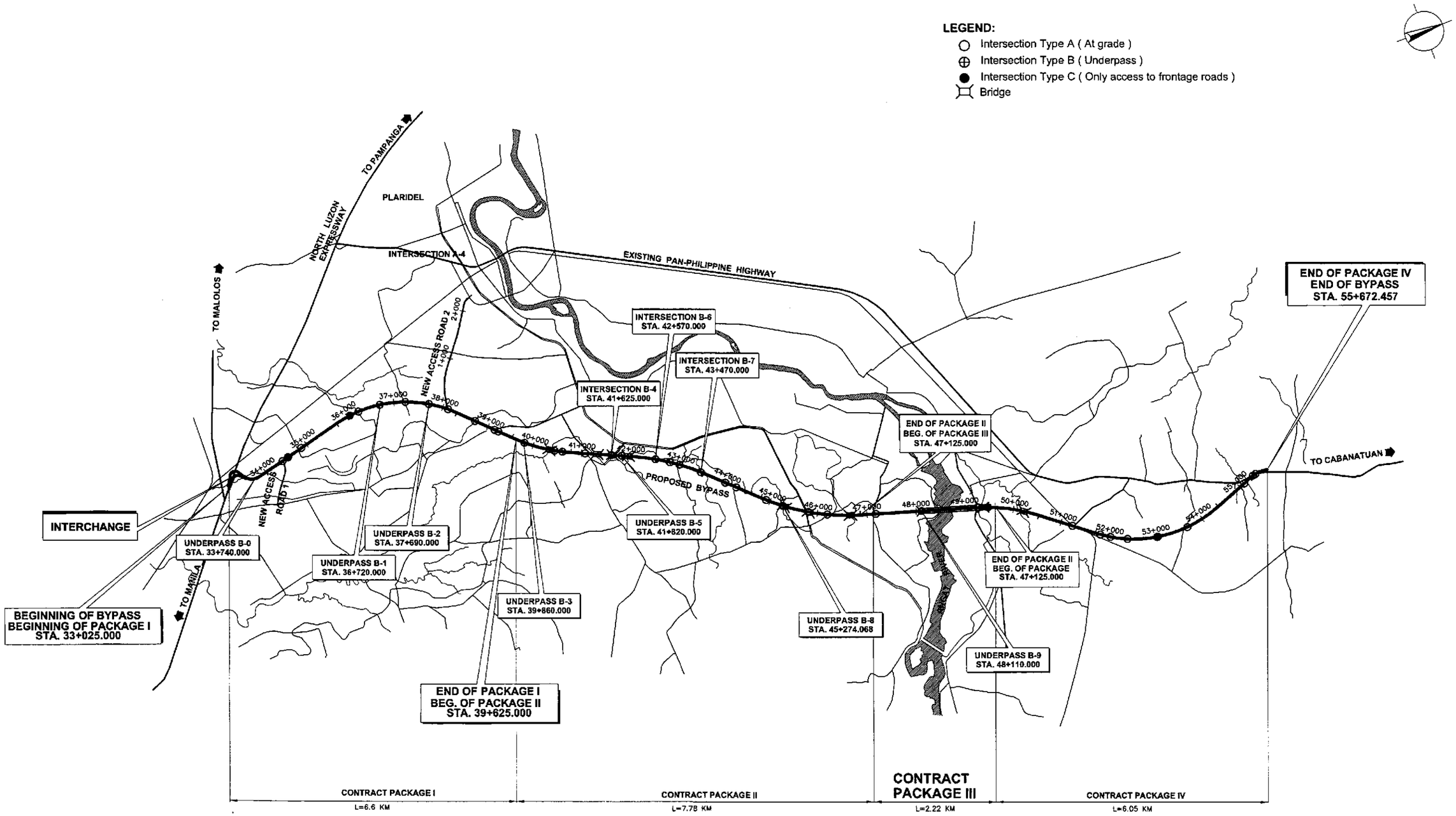

A
UP-01

SITE DEVELOPMENT PLAN - UNDERPASSES ALONG BYPASS

SCALE 1:40,000

JICA
JAPAN INTERNATIONAL COOPERATION AGENCY

KEI KATAHIRA & ENGINEERS INTERNATIONAL
YEC YACHIYO ENGINEERING CO., LTD.

	DATE	SIGNATURE
DESIGNED	9/21/02	
CHECKED	9/23/02	A. HAKIM
SUBMITTED	10/21/02	TEAM LEADER

REPUBLIC OF THE PHILIPPINES
DEPARTMENT OF PUBLIC WORKS AND HIGHWAYS

PJHL – PMO	BUREAU OF DESIGN		OFFICE OF THE SECRETARY	
Submitted By:	Reviewed By:	Recommended By:	Recommended By: (See cover sheet for Signature)	Approved By: (See cover sheet for Signature/Approval)
DANILO C. TRAJANO	JOSEFINA M. ALAGAR	GILBERTO S. REYES	MANUEL M. BONDAN	SIMEON A. DATUMANONG
Project Director	Chief, Highways Division	OIC, Director IV	Undersecretary	Secretary

PROJECT AND LOCATION :	SCALE :	SHEET CONTENTS :	SHEET NO. :
THE DETAILED DESIGN STUDY ON UPGRADING INTER-URBAN HIGHWAY SYSTEM ALONG THE PAN-PHILIPPINE HIGHWAY (Plaridel, Cabanatuan and San Jose Bypasses)	1:40,000	SITE DEVELOPMENT PLAN UNDERPASSES ALONG BYPASS	UP-01
PLARIDEL BYPASS - CONTRACT PACKAGE III	FULL SIZE A1		

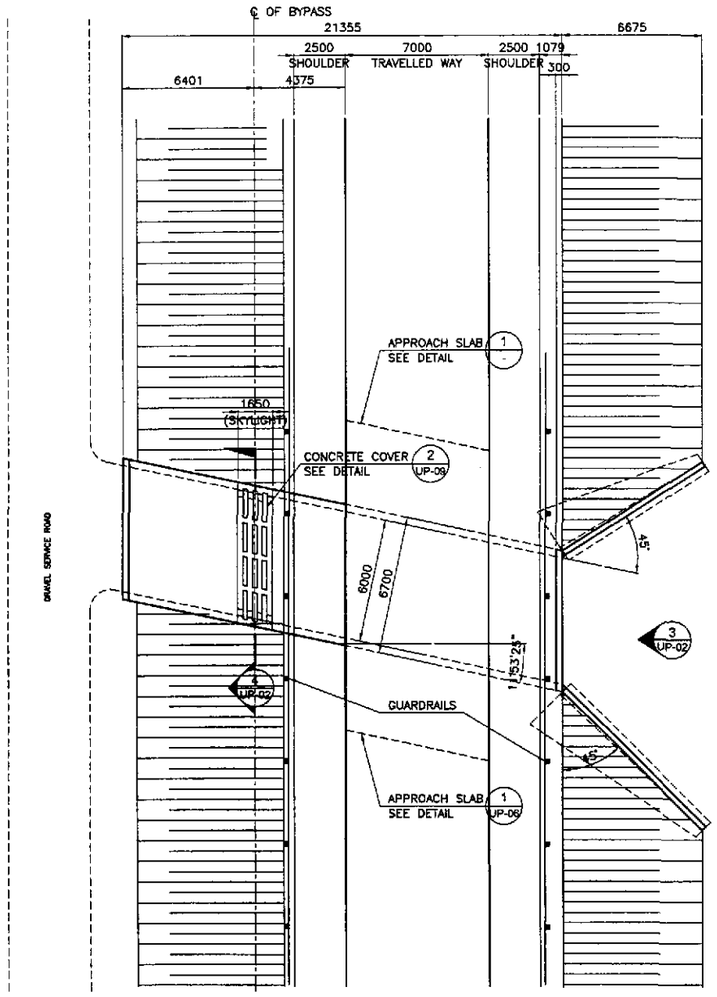

1 UP-02 GENERAL PLAN
SCALE 1:150

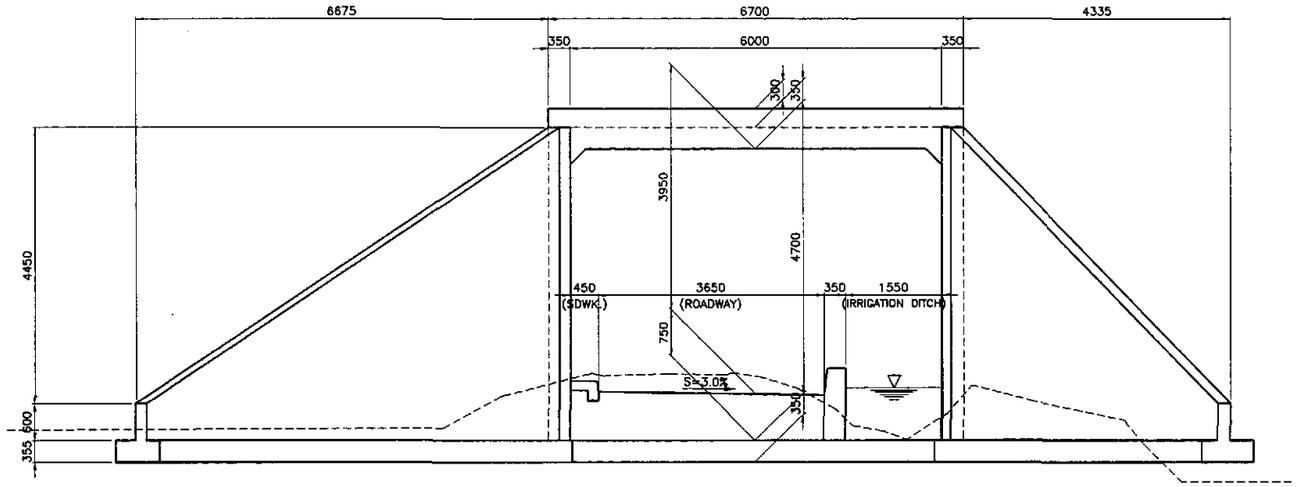

3 UP-02 ELEVATION
SCALE 1:50

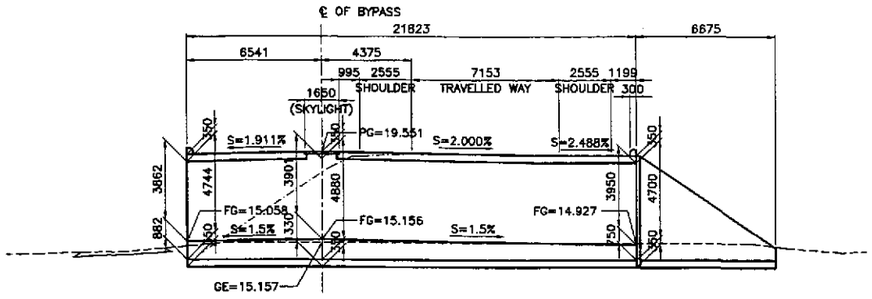

NOTE:
THE HORIZONTAL DIMENSIONS INDICATED IN THIS ELEVATION ARE SKEWED LENGTH

2 UP-02 GENERAL ELEVATION
SCALE 1:150

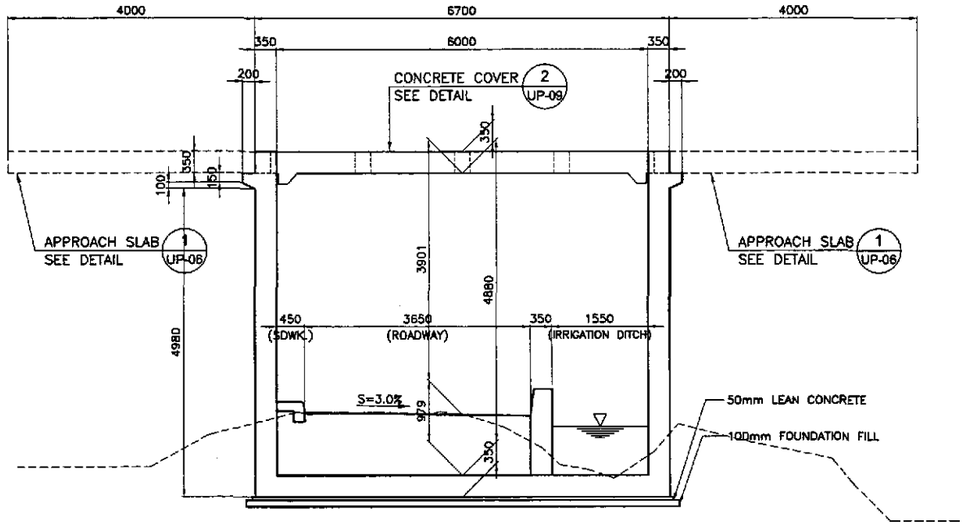

4 UP-02 SECTION
SCALE 1:50

JICA
JAPAN INTERNATIONAL COOPERATION AGENCY
KEI KATAHIRA & ENGINEERS INTERNATIONAL
YCO YACHIYO ENGINEERING CO., LTD.

	DATE	SIGNATURE
DESIGNED	9/2/02	
CHECKED	9/25/02	A. HAKIM
SUBMITTED	10/1/02	M. KUBOTA TEAM LEADER

REPUBLIC OF THE PHILIPPINES
DEPARTMENT OF PUBLIC WORKS AND HIGHWAYS

PJHL – PMO	BUREAU OF DESIGN		OFFICE OF THE SECRETARY	
Submitted By:	Reviewed By:	Recommended By:	Recommended By: (See cover sheet for Signature)	Approved By: (See cover sheet for Signature/Approval)
DANILO C. TRAJANO	JOSEFINA M. ALAGAR	GILBERTO S. REYES	MANUEL M. BONOAN	SIMEON A. DATUMANONG
Project Director	Chief, Highways Division	OIC, Director IV	Undersecretary	Secretary

PROJECT AND LOCATION :
THE DETAILED DESIGN STUDY ON UPGRADING INTER-URBAN HIGHWAY SYSTEM ALONG THE PAN-PHILIPPINE HIGHWAY
- (Plaridel, Cabanatuan and San Jose Bypasses)
PLARIDEL BYPASS - CONTRACT PACKAGE III

SCALE : AS SHOWN
FULL SIZE A1

SHEET CONTENTS :
BOX CULVERT
GENERAL PLAN, ELEVATION & SECTION
(INITIAL STAGE)
B-9 (STA. 48+110.00)

SHEET NO. : UP-02

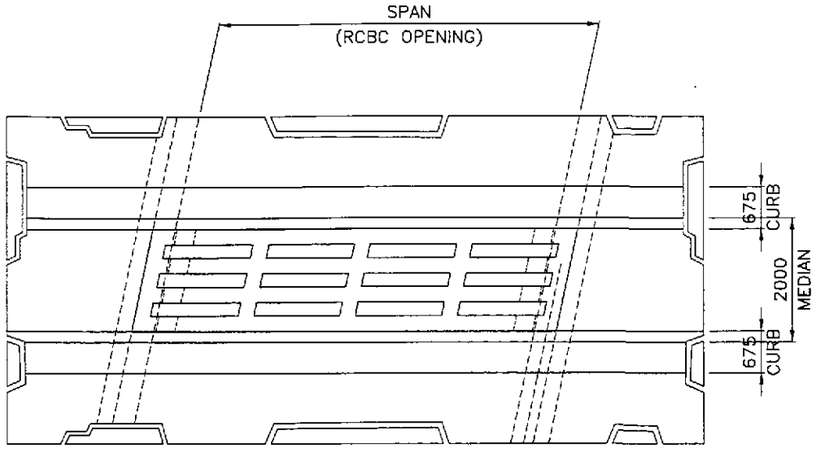

1 UP-03 **PLAN** SCALE 1:50

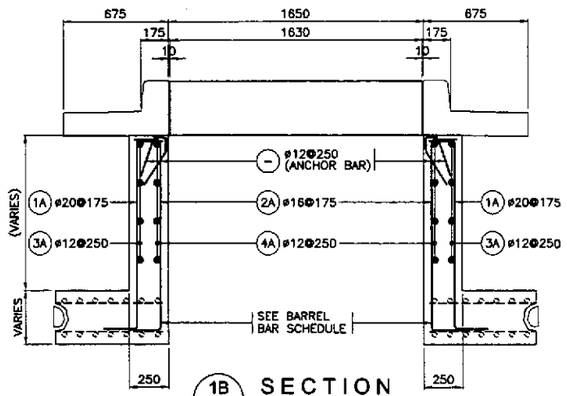

1B UP-03 **SECTION** SCALE 1:20

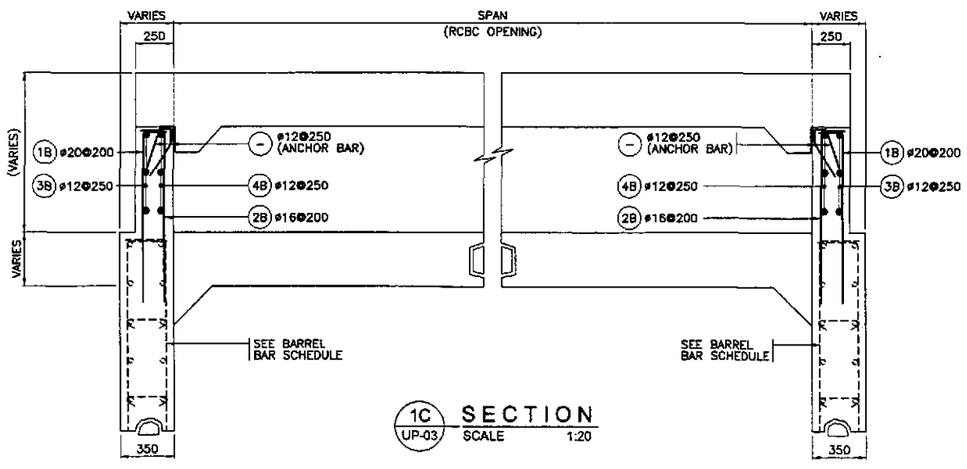

1C UP-03 **SECTION** SCALE 1:20

1 UP-03 **PARTIAL BOX SUPPORT DETAILS** SCALE AS SHOWN

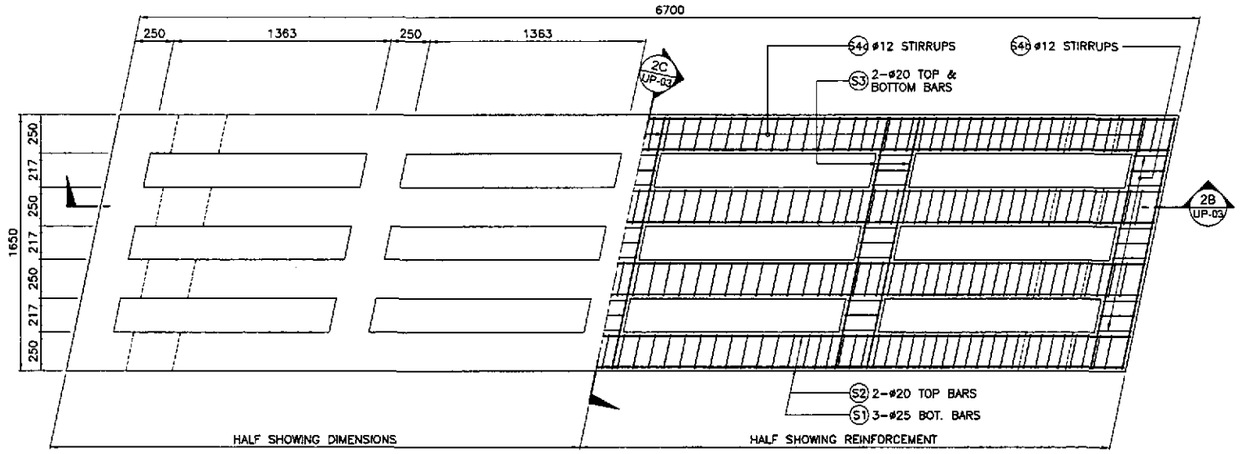

2A UP-03 **PLAN** SCALE 1:20

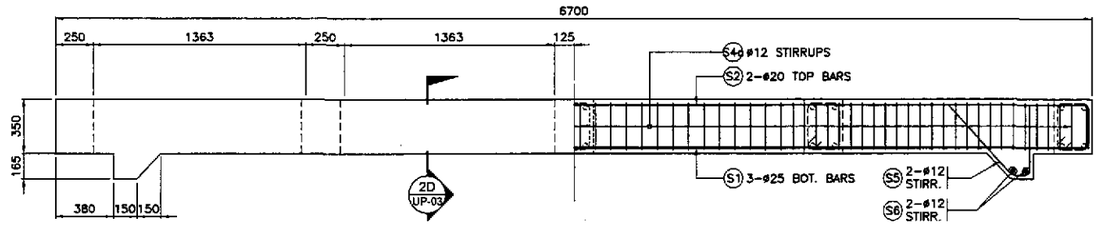

2B UP-03 **SECTION** SCALE 1:50

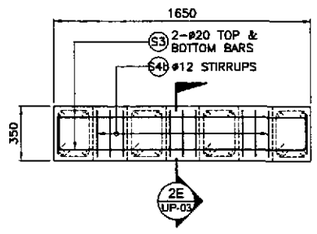

2C UP-03 **SECTION** SCALE 1:20

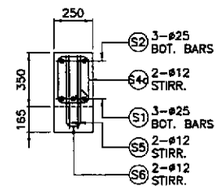

2D UP-03 **SECTION** SCALE 1:20

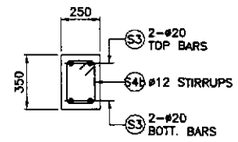

2E UP-03 **SECTION** SCALE 1:20

2 UP-03 **CONCRETE COVER DETAILS (6.0 M.)** SCALE AS SHOWN

SCHEDULE OF REINFORCEMENTS

STRUCTURE COMMENT	BAR MARK	BAR SIZE	QTY.	SPACING	BAR SHAPE	DIMENSIONS (mm) a	b	c	d	e	f	LENGTH EA. BAR	TOTAL LENGTH	UNIT WT. (KG/M)	WEIGHT IN (KG)	VOLUME OF CONC. (m^3)
B.D M SPAN	S1	32	8	AS DWG	A	6650	276	–	–	–	–	7202	57.62	6.313	364	2.7
	S2	20	8	AS DWG	A	6650	276	–	–	–	–	7202	57.62	2.466	143	
	S3	20	20	AS DWG	A	1600	276	–	–	–	–	2152	43.04	2.466	107	
	S4a	12	312	AS DWG	B	200	276	115	–	–	–	1182	368.78	0.888	328	
	S4b	12	45	AS DWG	B	200	276	115	–	–	–	1182	53.19	0.888	48	
	S5	12	16	AS DWG	C	465	125	660	–	–	–	1250	20	0.888	18	
	S6	12	16	AS DWG	A	100	465	–	–	–	–	1030	16.48	0.888	15	
													GRAND TOTAL =		1023 KG	2.7

BAR BENDING DIAGRAM

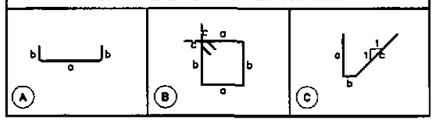

JICA
JAPAN INTERNATIONAL COOPERATION AGENCY
KEI KATAHIRA & ENGINEERS INTERNATIONAL
YEC YACHIYO ENGINEERING CO., LTD.

	DATE	SIGNATURE
DESIGNED	9/21/02	A. TAKIM
CHECKED	9/23/02	A. TAKIM
SUBMITTED	10/14/02	M. KUDO TEAM LEADER

REPUBLIC OF THE PHILIPPINES
DEPARTMENT OF PUBLIC WORKS AND HIGHWAYS

PJHL – PMO	BUREAU OF DESIGN		OFFICE OF THE SECRETARY	
Submitted By:	Reviewed By:	Recommended By:	Recommended By: (See cover sheet for Signature)	Approved By: (See cover sheet for Signature/Approval)
DANILO C. TRAJANO	JOSEFINA M. A.AGAR	GILBERTO S. REYES	MANUEL M. BONDAN	SIMEON A. DATUMANONG
Project Director	Chief, Highways Division	OIC, Director IV	Undersecretary	Secretary

PROJECT AND LOCATION :
THE DETAILED DESIGN STUDY ON UPGRADING INTER-URBAN HIGHWAY SYSTEM ALONG THE PAN-PHILIPPINE HIGHWAY (Plaridel, Cabanatuan and San Jose Bypasses)
PLARIDEL BYPASS - CONTRACT PACKAGE III

SCALE : AS SHOWN
FULL SIZE A1

SHEET CONTENTS :
BOX CULVERT
STEEL GRATING DETAIL ON FLUSHED (RCBC OPENING) (INITIAL STAGE)

SHEET NO. : UP-03

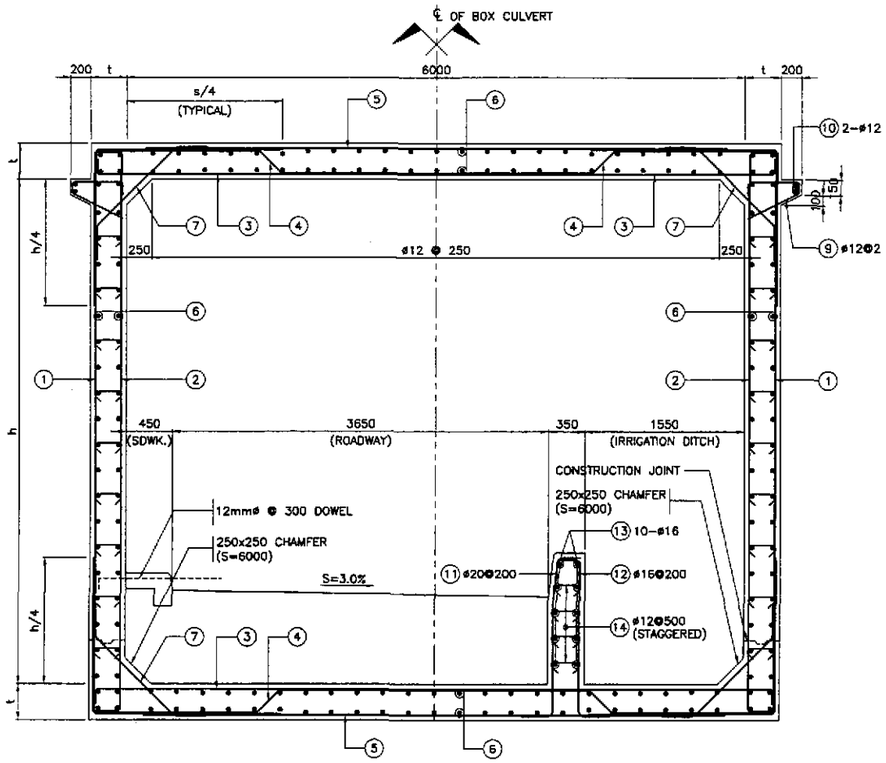

1 UP-04 SECTION - SINGLE BARREL
NOT TO SCALE

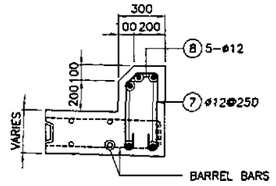

3 UP-04 PARAPET DETAIL
SCALE 1:20

DESIGN NOTES :

SPECIFICATIONS:
DESIGN:
BRIDGE DESIGN SPECIFICATION (1992 AASHTO SPECIFICATIONS)

LOAD FACTORS:
1.5 D 1.5 E + 2.5 (L + I)
1.3 (D + 1.67 LL + 1.00 E)
1.3 (D + 1.67 LL + 0.50 E)

WHERE:
D – DEAD LOAD
E – EARTH LOAD
L – LIVE LOAD
I – IMPACT
CAPACITY REDUCTION FACTOR IS INCLUDED.

LOADING:
LIVE LOAD:
HS20-44 TRUCK
APPLY IMPACT ONLY TO THE ROOF SLAB.

EARTH COVER (mm)	IMPACT (%)
Up to 300	30
301 to 600	20
601 to 900	10
Over 900	0

NO SURCHARGE ON WALL DUE TO LIVE LOAD.

EARTH LOAD:
EARTH PRESSURE FOR CONDITIONS:
18.8 KPa/m VERTICAL
9.4 KPa/M HORIZONTAL

UNIT STRESSES:
f'c = 28 MPa
fy = 276 MPa

DISTRIBUTION "d" BARS:
UP TO AND INCLUDING 3.0M COVER EXPRESSED AS A PERC OF MAIN POSITIVE REINFOCEMENT REQUIRED:
$\frac{55}{\sqrt{S}}$, MAX. 50%

OVER 3.0 COVER
#12 @ 450 mm MAXIMUM.

SHEAR:
MAXIMUM ALLOWABLE SHEAR, $y = 0.291\sqrt{f'c}$ MPa

EXCLUSIONS:
COMPRESSIVE REINFORCEMENT AND NEGATIVE-MOMENT REDUCTION (FOR CONTINUITY) DO NOT APPLY.
AXIAL LOADING ON MEMBERS HAS NOT BEEN CONSIDERED.

BAR SCHEDULE SINGLE BARREL BOX CULVERT

NAME	S	h	t	BAR 1		BAR 2		BAR 3		BAR 4		BAR 5		BAR 6		BAR 7		REMARKS
	SPAN	HEIGHT	THICKNESS	ø	SPACING	ø	SPACING	ø	SPACING	ø	SPACING	ø	SPACING	ø	SPACING	ø	SPACING	
B-9	6000	4900	350	20	200	20	200	20	200	20	200	12	200	12	250	16	200	FLUSHED TO ROADWAY (SKEW 12°LF)

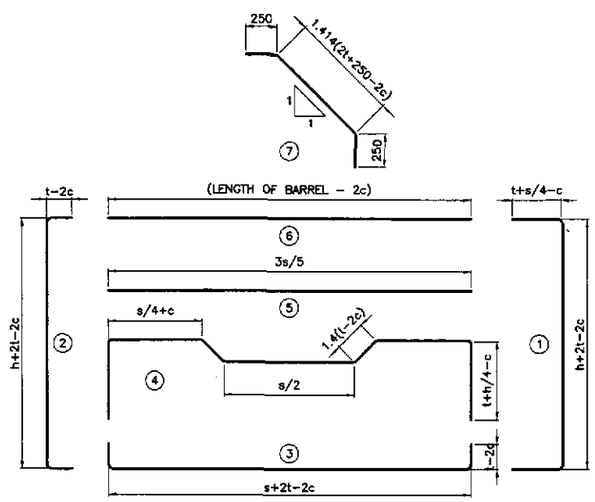

2 UP-04 BAR BENDING DIAGRAM - SINGLE BARREL
NOT TO SCALE

SCHEDULE OF REINFORCEMENTS (B9 – STA. 48+110.000)

STRUCTURE COMMENT	BAR MARK	BAR SIZE	QTY.	SPACING	BAR SHAPE	DIMENSIONS (mm) a	b	c	d	e	f	LENGTH EA. BAR	TOTAL LENGTH	UNIT WT. (KG/M)	WEIGHT IN (KG)	VOLUME OF CONC. (m^3)
BARREL L=21.823m.	1	20	226	200	A	1800	5420	1800	–	–	–	9020	2038.41	2.466	5027.00	182.90
	2	20	224	200	A	250	5420	250	–	–	–	5920	1325.97	2.466	3270.00	
	3	20	226	200	A	250	6600	250	–	–	–	7100	1604.60	2.466	3957.00	
	4	20	224	200	B	1505	1550	354	3000	–	–	9817	2198.98	2.466	5423.00	
	5	12	226	200	C	4000	–	–	–	–	–	4000	904.00	0.888	803.00	
	6	12	196	250	C	22211	–	–	–	–	–	22211	4353.27	0.888	3866.00	
	7	16	436	200	D	560	1202	560	–	–	–	2322	1012.35	1.579	1599.00	
	8	12	56	250	E	114	450	71	150	550	114	1449	81.13	0.888	73.00	
	9	12	10	AS DWG	D	6598	–	–	–	–	–	6598	65.98	0.888	59.00	
	10	12	58	250	H	500	70	707	–	–	–	1277	74.07	0.888	66.00	
	11	12	4	AS DWG	D	6900	–	–	–	–	–	6900	27.60	0.888	25.00	
DITCH WALL	12	20	110	200	J	209	371	1147	317	–	–	2044	224.84	2.466	555.00	9.77
	13	16	110	200	K	209	1527	317	–	–	–	2053	225.83	1.579	357.00	
	14	12	10	AS DWG	D	21723	–	–	–	–	–	21723	217.23	0.888	193.00	
	15	12	221	400	G	114	274	114	–	–	–	502	110.94	0.888	99.00	
WINGWALL (h+t)=5.123m. L=9.740m.	W1	12	2	AS DWG	D	600	11706	–	–	–	–	12306	24.61	0.888	22.00	19.37
	W2	12	17	300	D	5463 (mm)	–	–	–	–	–	5463	92.86	0.888	83.00	
	W3a	32	20	200	I	1757	4448 (mm)	150	–	–	–	6355	127.09	6.313	803.00	
	W3b	25	15	200	I	1267	2734 (mm)	150	–	–	–	4151	62.26	3.854	240.00	
	W3c	16	6	350	I	807	1401 (mm)	150	–	–	–	2358	14.15	1.579	23.00	
	W4	12	33	300	I	203	3115 (mm)	150	–	–	–	3468	114.44	0.888	102.00	
	W5a	25	20	200	D	2248 (mm)	–	–	–	–	–	2248	44.96	3.854	174.00	
	W5b	25	7	400	D	1902 (mm)	–	–	–	–	–	1902	13.32	3.854	52.00	
	W5c	16	6	350	D	1137 (mm)	–	–	–	–	–	1137	6.82	1.579	11.00	
	W6	12	7	AS DWG	D	9990	–	–	–	–	–	9990	69.93	0.888	63.00	
WINGWALL (h+t)=5.123m. L=8.259m.	W1	12	2	AS DWG	D	600	9926	–	–	–	–	10526	21.05	0.888	19.00	16.47
	W2	12	17	300	D	4623 (mm)	–	–	–	–	–	4623	78.60	0.888	70.00	
	W3a	32	17	200	I	1757	4638 (mm)	150	–	–	–	6545	111.26	6.313	703.00	
	W3b	25	13	200	I	1267	3115 (mm)	150	–	–	–	4532	58.91	3.854	228.00	
	W3c	16	5	350	I	807	1592 (mm)	150	–	–	–	2549	12.74	1.579	21.00	
	W4	12	28	300	I	203	3115 (mm)	150	–	–	–	3468	97.10	0.888	87.00	
	W5a	25	17	200	D	2248 (mm)	–	–	–	–	–	2248	38.22	3.854	148.00	
	W5b	25	6	400	D	1902 (mm)	–	–	–	–	–	1902	11.41	3.854	44.00	
	W5c	16	5	350	D	1137 (mm)	–	–	–	–	–	1137	5.68	1.579	9.00	
	W6	12	7	AS DWG	D	8509	–	–	–	–	–	8509	59.56	0.888	53.00	
													GRAND TOTAL =		28327 KG	228.50

JICA
JAPAN INTERNATIONAL COOPERATION AGENCY
KEI KATAHIRA & ENGINEERS INTERNATIONAL
YEC YACHIYO ENGINEERING CO., LTD.

	DATE	SIGNATURE
DESIGNED	9/21/01	M. CHOI
CHECKED	9/23/01	J. HAWN
SUBMITTED	10/14/01	C.M. RAICHI TEAM LEADER

REPUBLIC OF THE PHILIPPINES
DEPARTMENT OF PUBLIC WORKS AND HIGHWAYS

PJHL – PMO	BUREAU OF DESIGN		OFFICE OF THE SECRETARY	
Submitted By:	Reviewed By:	Recommended By:	Recommended By: (See cover sheet for Signature)	Approved By: (See cover sheet for Signature/Approval)
DANILO C. TRAJANO	JOSEFINA M. ALAGAR	GILBERTO S. REYES	MANUEL M. BONGAN	SIMEON A. DATUMANONG
Project Director	Chief, Highways Division	OIC, Director IV	Undersecretary	Secretary

PROJECT AND LOCATION :
THE DETAILED DESIGN STUDY ON UPGRADING INTER-URBAN HIGHWAY SYSTEM ALONG THE PAN-PHILIPPINE HIGHWAY (Plaridel, Cabanatuan and San Jose Bypasses)
PLARIDEL BYPASS - CONTRACT PACKAGE III

SCALE : AS SHOWN
FULL SIZE A1

SHEET CONTENTS : BOX CULVERT BARREL DETAILS (INITIAL STAGE)

SHEET NO. : UP-04

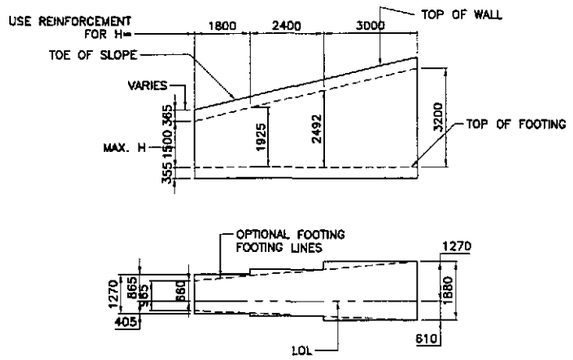

1 UP-05 TYPICAL LAYOUT EXAMPLE
SCALE 1:100

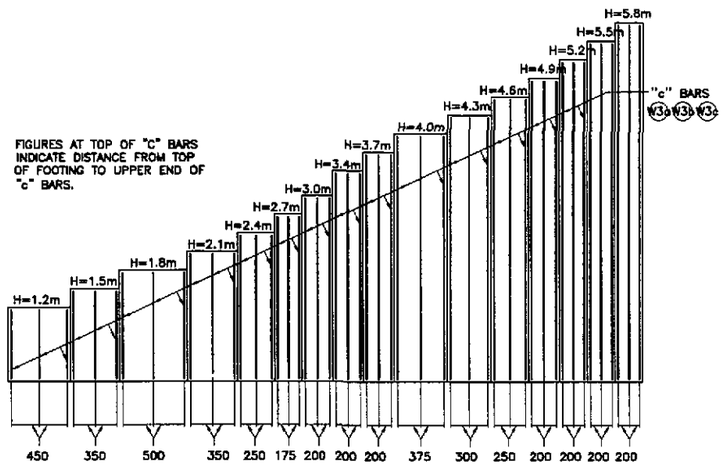

REINFORCED CONCRETE WINGWALLS																
H	1200	1500	1800	2100	2400	2700	3000	3400	3700	4000	4300	4600	4900	5200	5500	5800
W	965	1120	1270	1420	1575	1730	1880	2030	2185	2335	2490	2640	2795	2945	3050	3150
C	305	355	405	455	510	560	610	660	710	760	815	865	915	965	1015	1065
B	660	765	865	965	1065	1170	1270	1370	1475	1575	1675	1775	1880	1980	2035	2085
F	355	355	355	355	355	355	355	355	355	355	355	355	355	355	355	355
Battar	None	None	None	None	None	None	None	None	None	1:25	1:25	1:25	1:25	1:25	1:26	1:27
S	305	305	305	305	305	305	305	305	305	485	475	490	500	500	500	500
"c" Bars	12@450	12@350	12@275	16@350	16@250	16@175	20@200	25@200	25@200	32@375	32@300	32@250	32@200	32@175	32@200	32@200
"d" Bars	12@450	12@350	12@275	16@350	16@250	20@350	25@400	25@400	25@400	25@375	25@300	25@250	25@200	25@175	28@200	28@200

NOTES

UNIT STRESSES: f_c =165 MPa, f_c f =9 MPa, n=10

MAXIMUM TOE PRESSURE = 150 kPa

ELEVATIONS, LENGTH AND ANGLE OF FLARE OF WINGS MAY BE VARIED BY THE ENGINEER TO SUIT CONDITIONS ENCOUNTERED IN THE FIELD. WALLS DESIGNED FOR 600 mm LIVELOAD SURCHARGE, 1 : 1.5 SLOPING SURCHARGE NOT TO EXCEED 1.5 m IN ELEVATION PLUS 600 mm LIVELOAD SURCHARGE, OR UNLIMITED 1:2 SURCHARGE

DIMENSIONS "H", "L","W","N", ELEVATION "a" AND "ANGLE OF FLARES" (AS APPLY) ARE SHOWN ON THE PLANS

WALL HEIGHT MAY BE EXCEEDED BY 150 mm BEFORE GOING TO NEXT GREATER "H".

ELIMINATE CUTOFF WALL IF ADJACENT CHANNEL IS PAVED AND SKEW IS 20° MAXIMUM

FOR WALL OFFSET VALUES, SEE STANDARD PLAN B3-8

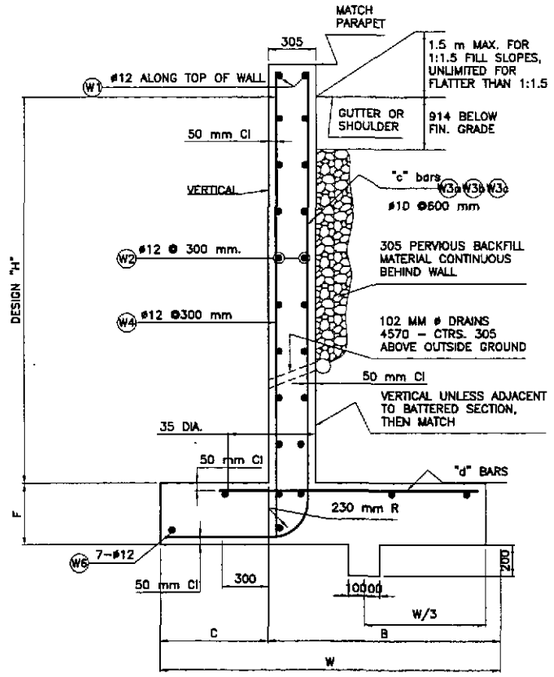

2 UP-05 TYPICAL SECTION
H=1.2 m THRU 3.7 m
SCALE 1:20

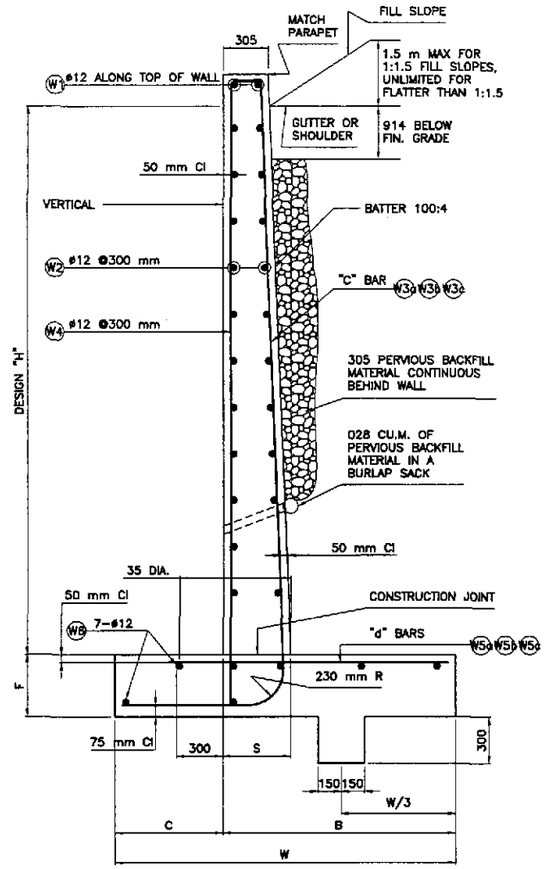

3 UP-05 TYPICAL SECTION
H=4.0 m THRU 4.9 m
SCALE 1:20

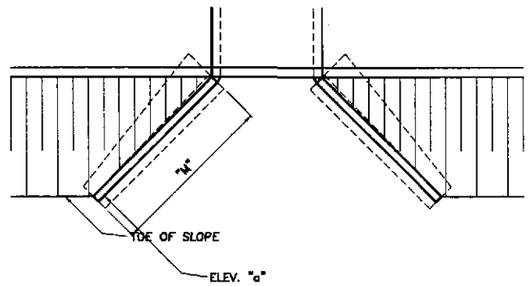

4 UP-05 PLAN
SCALE 1:100

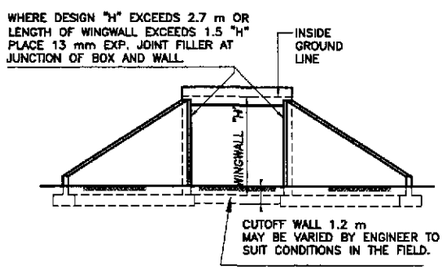

5 UP-05 END ELEVATION
SCALE 1:100

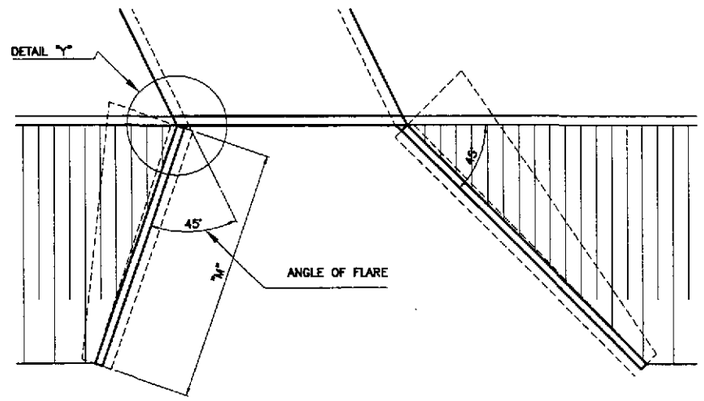

6 UP-05 PLAN
SCALE 1:100

	DATE	SIGNATURE	REPUBLIC OF THE PHILIPPINES DEPARTMENT OF PUBLIC WORKS AND HIGHWAYS					PROJECT AND LOCATION :	SCALE :	SHEET CONTENTS :	SHEET NO. :
JICA JAPAN INTERNATIONAL COOPERATION AGENCY			PJHL – PWD	BUREAU OF DESIGN		OFFICE OF THE SECRETARY		THE DETAILED DESIGN STUDY ON UPGRADING INTER-URBAN HIGHWAY SYSTEM ALONG THE PAN-PHILIPPINE HIGHWAY (Plaridel, Cabanatuan and San Jose Bypasses)	AS SHOWN	BOX CULVERT WINGWALL DETAIL (INITIAL STAGE)	UP-05
DESIGNED	9/21/02	A. CHAN	Submitted By:	Reviewed By:	Recommended By:	Recommended By: (See cover sheet for Signature)	Approved By: (See cover sheet for Signature/Approval)				
CHECKED	9/23/02	A. HAKIM									
SUBMITTED	10/8/02	TEAM LEADER	DANILO C. TRAJANO Project Director	JOSEFINA M. ALAGAR Chief, Highways Division	GILBERTO S. REYES OIC, Director IV	MANUEL M. BONOAN Undersecretary	SIMEON A. DATUMANONG Secretary	PLARIDEL BYPASS - CONTRACT PACKAGE III	FULL SIZE A1		

KEI KATAHIRA & ENGINEERS INTERNATIONAL
YEC YACHIYO ENGINEERING CO., LTD.

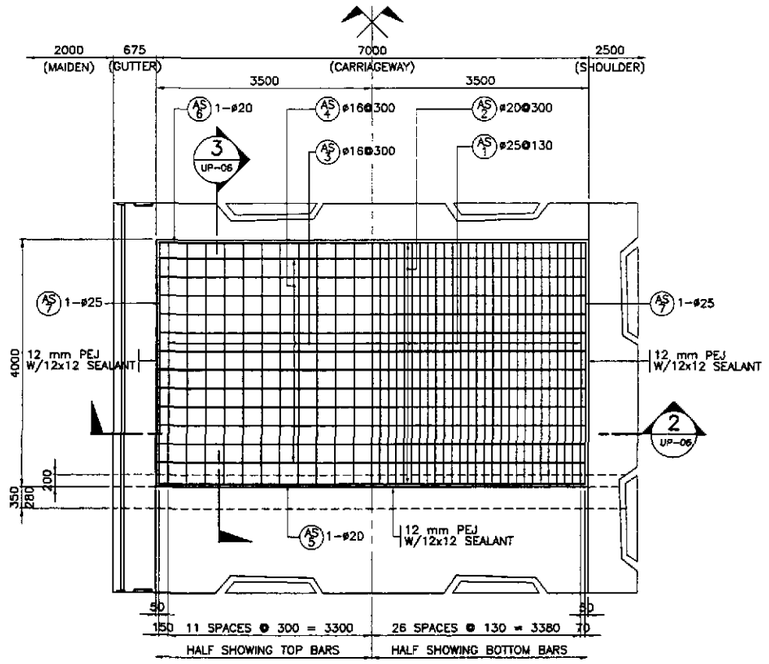

1 UP-06 PLAN
SCALE 1:50

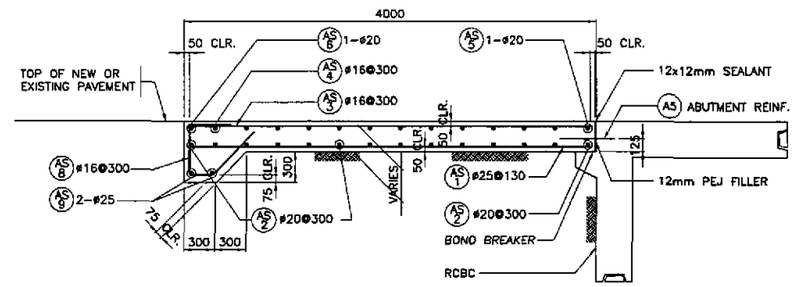

3 UP-06 SECTION
SCALE 1:30

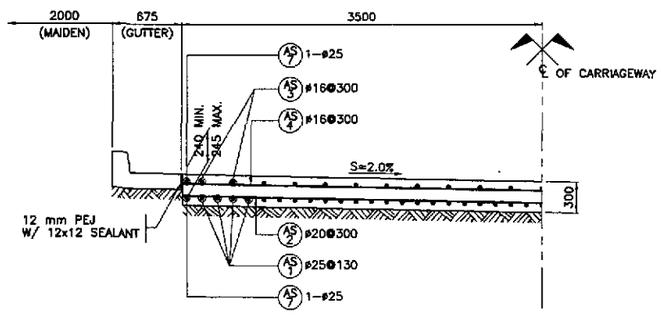

2 UP-06 SECTION
SCALE 1:30

REINFORCEMENT SCHEDULE & ESTIMATED QUANTITIES FOR TWO LANES APPROACH SLABS

BENDING DIAGRAM (DIMENSIONS ARE OUT TO OUT OF REBARS)	REINFORCEMENT												CONCRETE VOLUME (m^3)	REMARKS
	MARK	SIZE (mm)	QUANTITY	SPACING (mm)	SHAPE	BAR DIMENSIONS (mm) a	b	c	LENGTH PER BAR (mm)	TOTAL LENGTH (m)	UNIT WEIGHT (kg/m)	TOTAL WEIGHT (kg)		
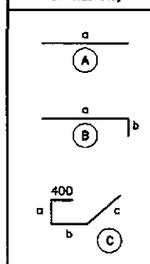	AS 7	25	69	130	B	3900	150	–	4050	226.80	3.853	874	9.58	1. QUANTITIES ARE FOR ONE (1) APPROACH SLAB
	AS 2	20	14	300	A	7900	–	–	7900	55.30	2.466	136		
	AS 3	16	25	300	B	3900	150	–	4050	101.25	1.578	160		
	AS 4	16	12	300	A	7900	–	–	7900	47.40	1.578	75		
	AS 5	20	1	AS SHOWN	A	7200	–	–	7200	7.20	2.466	18		
	AS 6	20	1	AS SHOWN	A	7900	–	–	4050	53.20	1.578	84		
	AS 7	25	4	AS SHOWN	A	1965	1965	–	3930	15.72	3.853	61		
	AS 8	16	27	300	C	415 MIN. 475 MAX.	250	650	1745	47.11	1.578	74		
	AS 8	25	2	AS SHOWN	A	7900	–	–	7900	15.80	3.853	61		
	GRAND TOTAL = 1543												9.58	

JICA
JAPAN INTERNATIONAL COOPERATION AGENCY
KEI KATAHIRA & ENGINEERS INTERNATIONAL
YEC YACHIYO ENGINEERING CO., LTD.

	DATE	SIGNATURE
DESIGNED	9/21/02	A. MAKIN
CHECKED	9/23/02	A. MAKIN
SUBMITTED	10/4/02	TEAM LEADER

REPUBLIC OF THE PHILIPPINES
DEPARTMENT OF PUBLIC WORKS AND HIGHWAYS

PJHL – PMO	BUREAU OF DESIGN		OFFICE OF THE SECRETARY	
Submitted By:	Reviewed By:	Recommended By:	Recommended By: (See cover sheet for Signature)	Approved By: (See cover sheet for Signature/Approval)
DANILO C. TRAJANO	JOSEFINA M. ALAGAR	GILBERTO S. REYES	MANUEL M. BONGAN	SIMEON A. DATUMANONG
Project Director	Chief, Highways Division	OIC, Director IV	Undersecretary	Secretary

PROJECT AND LOCATION :
THE DETAILED DESIGN STUDY ON UPGRADING INTER-URBAN HIGHWAY SYSTEM ALONG THE PAN-PHILIPPINE HIGHWAY (Plaridel, Cabanatuan and San Jose Bypasses)
PLARIDEL BYPASS - CONTRACT PACKAGE III

SCALE : AS SHOWN
FULL SIZE A1

SHEET CONTENTS :
BOX CULVERT
APPROACH SLAB DETAIL
(INITIAL STAGE)

SHEET NO. : UP-06