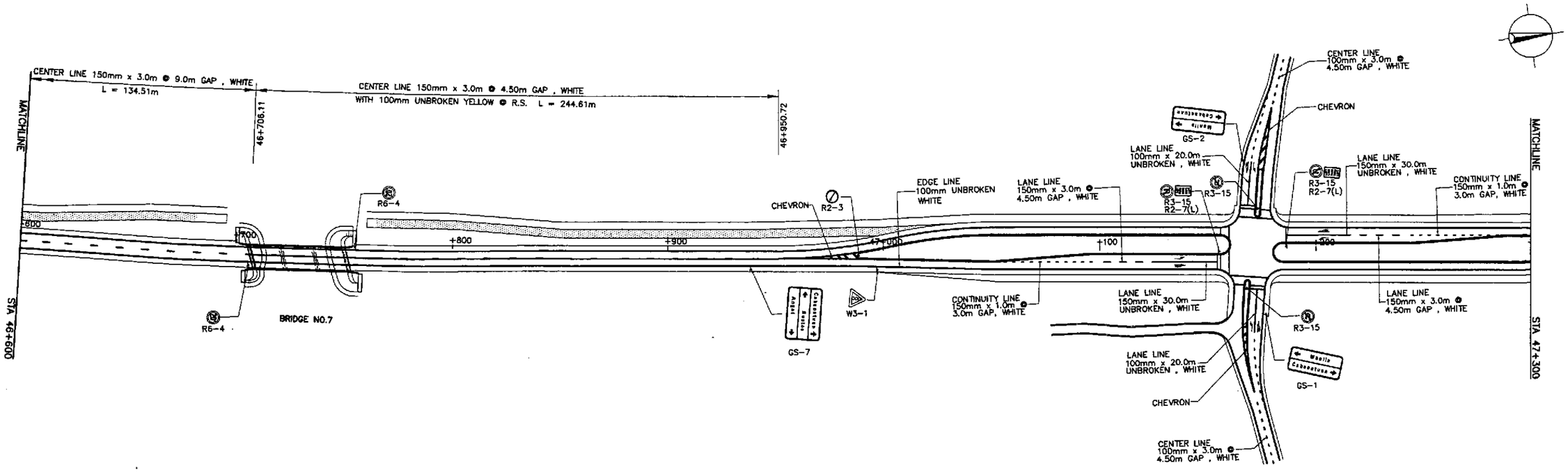

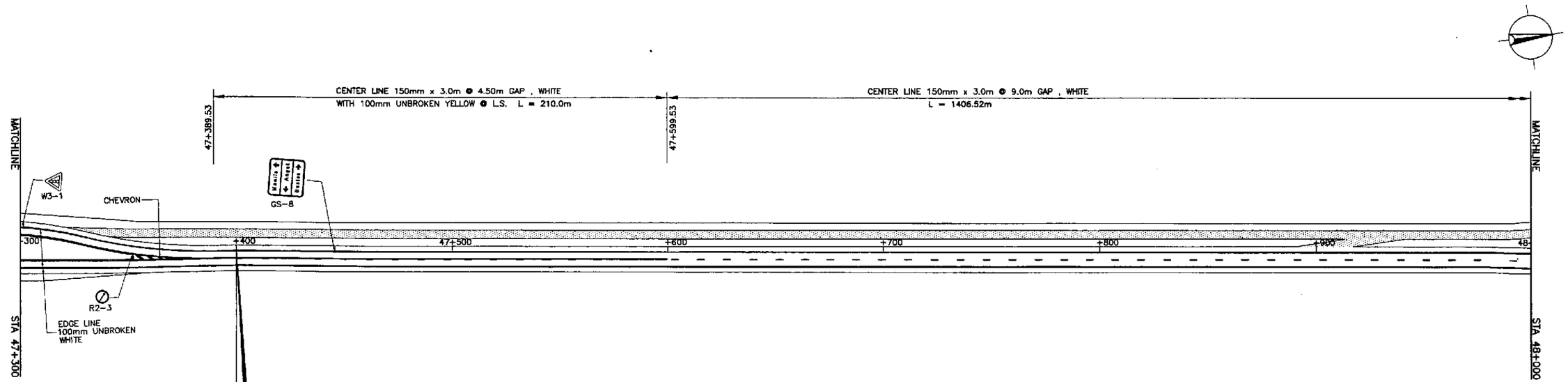

PLARIDEL BYPASS
BEGENNING OF
CONTRACT PACKAGE III
END OF CONTRACT PACKAGE II
STA. 47+400.00
ELEV. = 18.127
N = 1,655,914.515
E = 492,454.342

JICA
JAPAN INTERNATIONAL COOPERATION AGENCY
KATAHIRA & ENGINEERS INTERNATIONAL
YACHIYO ENGINEERING CO., LTD.

	DATE	SIGNATURE
DESIGNED	9/21/02	S. LUNA
CHECKED	9/23/02	S. BOSE
SUBMITTED	10/14/02	M. KINOSHITA TEAM LEADER

REPUBLIC OF THE PHILIPPINES
DEPARTMENT OF PUBLIC WORKS AND HIGHWAYS

PJHL – PMO	BUREAU OF DESIGN		OFFICE OF THE SECRETARY	
Submitted By:	Reviewed By:	Recommended By:	Recommended By: (See cover sheet for Signature)	Approved By: (See cover sheet for Signature/Approval)
DANILO C. TRAJANO	JOSEFINA M. ALAGAR	GILBERTO S. REYES	MANUEL M. BONDAN	SIMEON A. DATUMANONG
Project Director	Chief, Highways Division	OIC, Director IV	Undersecretary	Secretary

PROJECT AND LOCATION :
THE DETAILED DESIGN STUDY ON UPGRADING INTER-URBAN HIGHWAY SYSTEM ALONG THE PAN-PHILIPPINE HIGHWAY (Plaridel, Cabanatuan and San Jose Bypasses)
PLARIDEL BYPASS - CONTRACT PACKAGE III

SCALE : 1:1000 FULL SIZE A1

SHEET CONTENTS :
TRAFFIC SIGNS AND PAVEMENT MARKINGS LAYOUT PLAN
ALONG BYPASS (INITIAL STAGE)
STA. 47+400 - STA. 48+000

SHEET NO. : RM-01

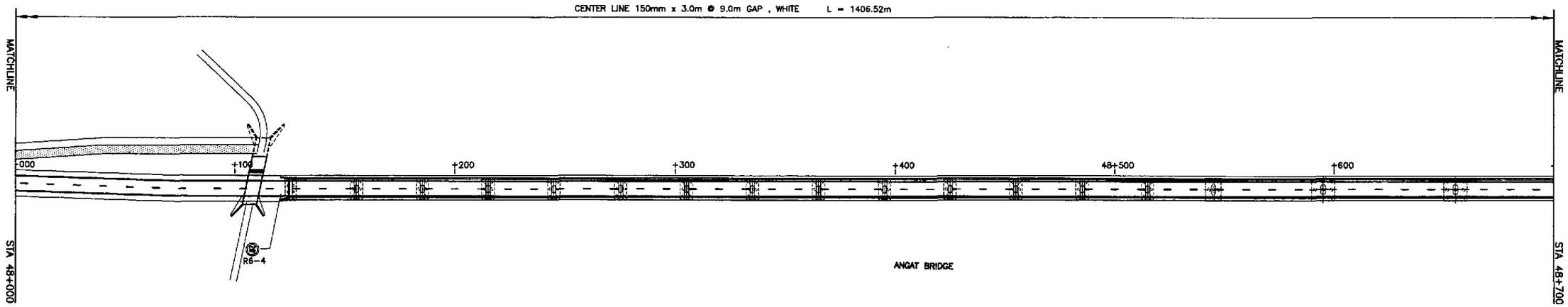

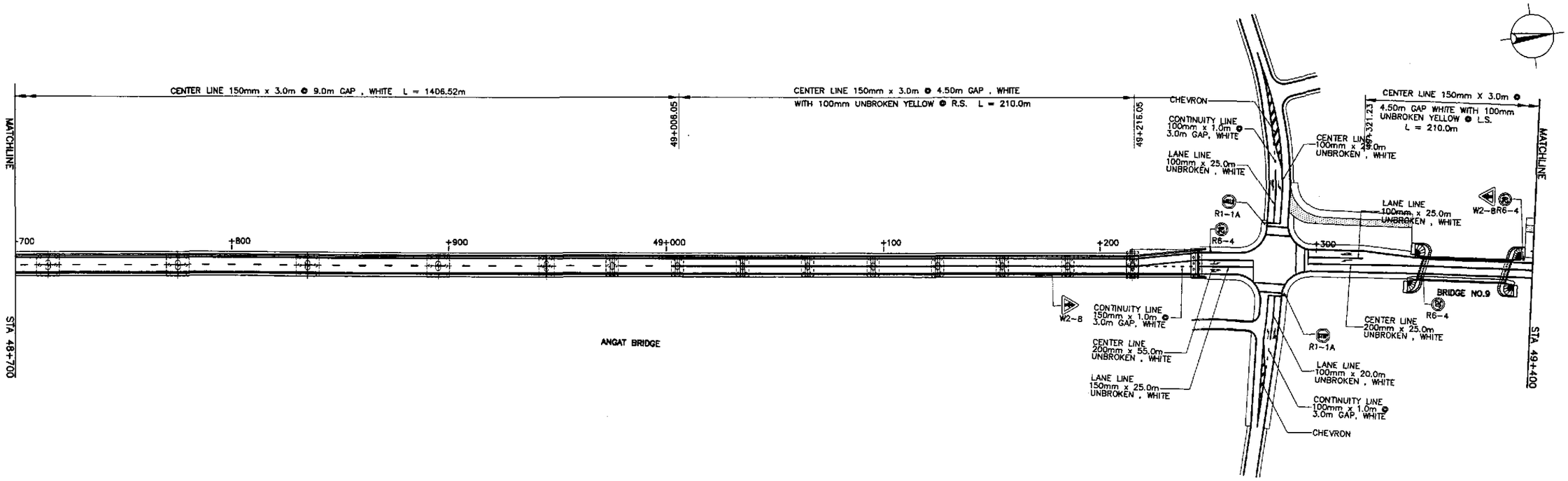

JICA
JAPAN INTERNATIONAL COOPERATION AGENCY

KEI KATAHIRA & ENGINEERS INTERNATIONAL
YEC YACHIYO ENGINEERING CO., LTD.

	DATE	SIGNATURE
DESIGNED	9/21/02	S. LUNA
CHECKED	9/23/02	S. JOSE
SUBMITTED	10/14/02	TEAM LEADER

REPUBLIC OF THE PHILIPPINES
DEPARTMENT OF PUBLIC WORKS AND HIGHWAYS

PJHL - PMO	BUREAU OF DESIGN		OFFICE OF THE SECRETARY	
Submitted By:	Reviewed By:	Recommended By:	Recommended By: (See cover sheet for Signature)	Approved By: (See cover sheet for Signature/Approval)
DANILO C. TRAJANO	JOSEFINA M. ALAGAR	GILBERTO S. REYES	MANUEL M. BONOAN	SIMEON A. DATUMANONG
Project Director	Chief, Highways Division	OIC, Director IV	Undersecretary	Secretary

PROJECT AND LOCATION :
THE DETAILED DESIGN STUDY ON UPGRADING INTER-URBAN HIGHWAY SYSTEM ALONG THE PAN-PHILIPPINE HIGHWAY (Plaridel, Cabanatuan and San Jose Bypasses)
PLARIDEL BYPASS - CONTRACT PACKAGE III

SCALE : 1:1000 FULL SIZE A1

SHEET CONTENTS :
TRAFFIC SIGNS AND PAVEMENT MARKINGS LAYOUT PLAN
ALONG BYPASS (INITIAL STAGE)
STA. 48+000 - STA. 49+400

SHEET NO. : RM-02

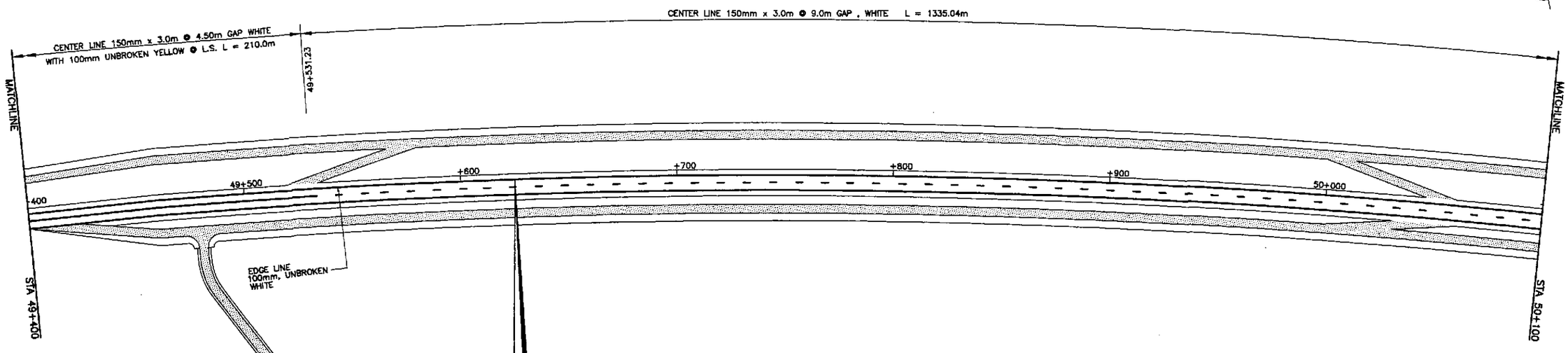

PLARIDEL BYPASS
END OF
CONTRACT PACKAGE III
BEG. OF CONTRACT PACKAGE IV
STA. 49+625.00
ELEV. = 18.127
N = 1,655,914.515
E = 492,454.342

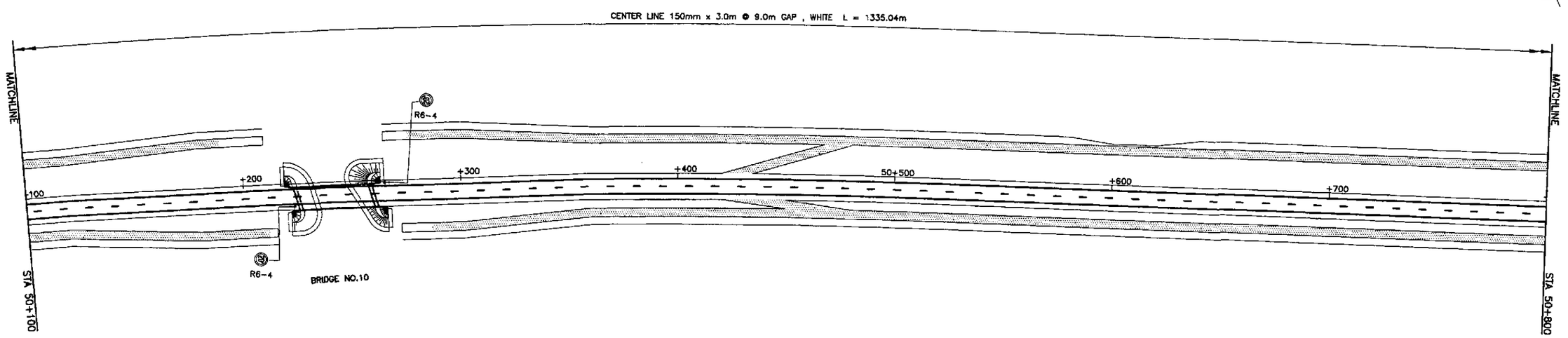

		DATE	SIGNATURE
JICA JAPAN INTERNATIONAL COOPERATION AGENCY	DESIGNED	9/25/02	S. LUNA
KATAHIRA & ENGINEERS INTERNATIONAL / YACHIYO ENGINEERING CO., LTD.	CHECKED	9/23/02	S. GOSE SC GOSE
	SUBMITTED	10/14/02	TEAM LEADER

REPUBLIC OF THE PHILIPPINES
DEPARTMENT OF PUBLIC WORKS AND HIGHWAYS

PJHL – PMO	BUREAU OF DESIGN		OFFICE OF THE SECRETARY	
Submitted By:	Reviewed By:	Recommended By:	Recommended By: (See cover sheet for Signature)	Approved By: (See cover sheet for Signature/Approval)
DANILO C. TRAJANO	JOSEFINA M. ALAGAR	GILBERTO S. REYES	MANUEL M. BONDAN	SIMEON A. DATUMANONG
Project Director	Chief, Highways Division	OIC, Director IV	Undersecretary	Secretary

PROJECT AND LOCATION :	SCALE :	SHEET CONTENTS :	SHEET NO. :
THE DETAILED DESIGN STUDY ON UPGRADING INTER-URBAN HIGHWAY SYSTEM ALONG THE PAN-PHILIPPINE HIGHWAY (Plaridel, Cabanatuan and San Jose Bypasses) PLARIDEL BYPASS - CONTRACT PACKAGE III	1:1000 FULL SIZE A1	TRAFFIC SIGNS AND PAVEMENT MARKINGS LAYOUT PLAN ALONG BYPASS (INITIAL STAGE) STA. 49+400 - STA. 49+625	RM-03

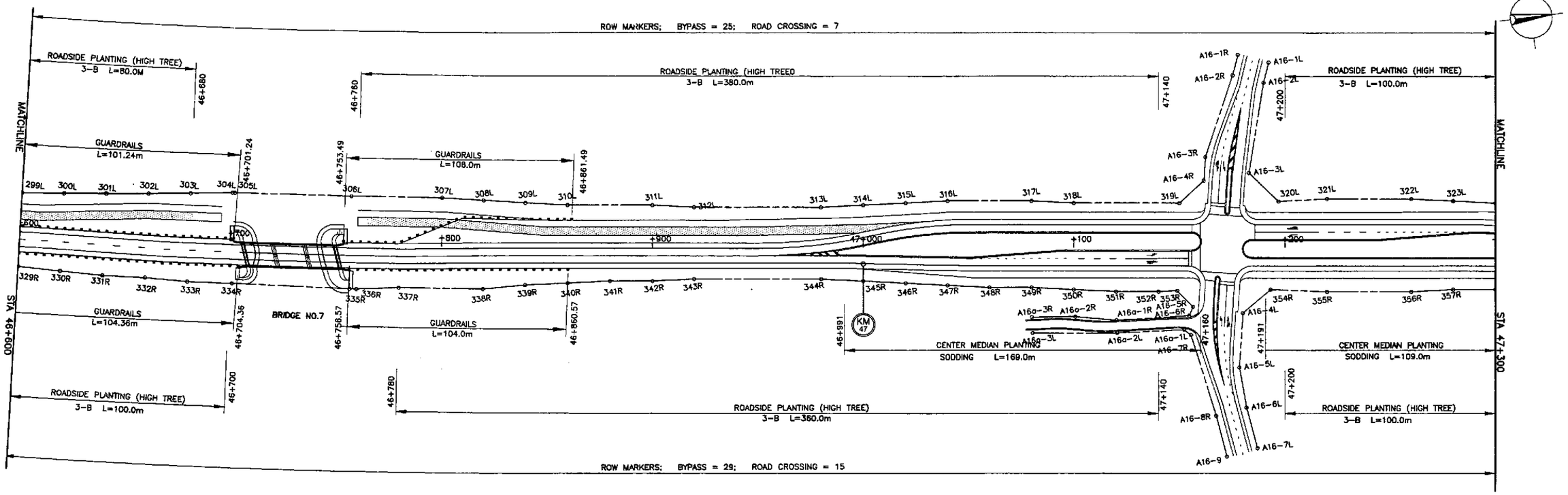

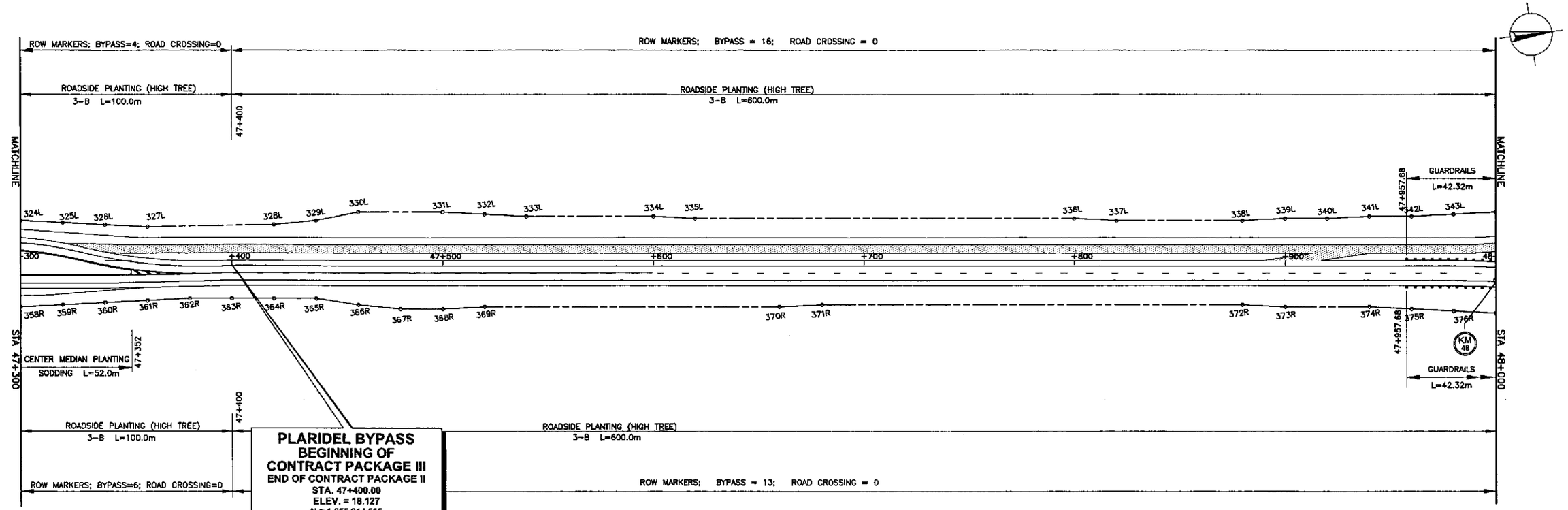

JICA
JAPAN INTERNATIONAL COOPERATION AGENCY

KEI KATAHIRA & ENGINEERS INTERNATIONAL
YEC YACHIYO ENGINEERING CO., LTD.

	DATE	SIGNATURE
DESIGNED	9/21/02	S. LUNA
CHECKED	9/23/02	S. COSE
SUBMITTED	10/14/02	M. KUNDU TEAM LEADER

REPUBLIC OF THE PHILIPPINES
DEPARTMENT OF PUBLIC WORKS AND HIGHWAYS

PUHL - PNO	BUREAU OF DESIGN		OFFICE OF THE SECRETARY	
Submitted By:	Reviewed By:	Recommended By:	Recommended By: (See cover sheet for Signature)	Approved By: (See cover sheet for Signature/Approval)
DANILO C. TRAJANO	JOSEFINA M. ALAGAR	GILBERTO S. REYES	MANUEL M. BONOAN	SIMEON A. DATUMANONG
Project Director	Chief, Highways Division	OIC, Director IV	Undersecretary	Secretary

PROJECT AND LOCATION :
THE DETAILED DESIGN STUDY ON UPGRADING INTER-URBAN HIGHWAY SYSTEM ALONG THE PAN-PHILIPPINE HIGHWAY (Plaridel, Cabanatuan and San Jose Bypasses)
PLARIDEL BYPASS - CONTRACT PACKAGE III

SCALE : 1:1000
FULL SIZE A1

SHEET CONTENTS :
PLANTING, GUARDRAIL AND RIGHT-OF-WAY- LAYOUT
(INITIAL STAGE)
STA. 47+400 - STA. 48+000

SHEET NO. : RM-04

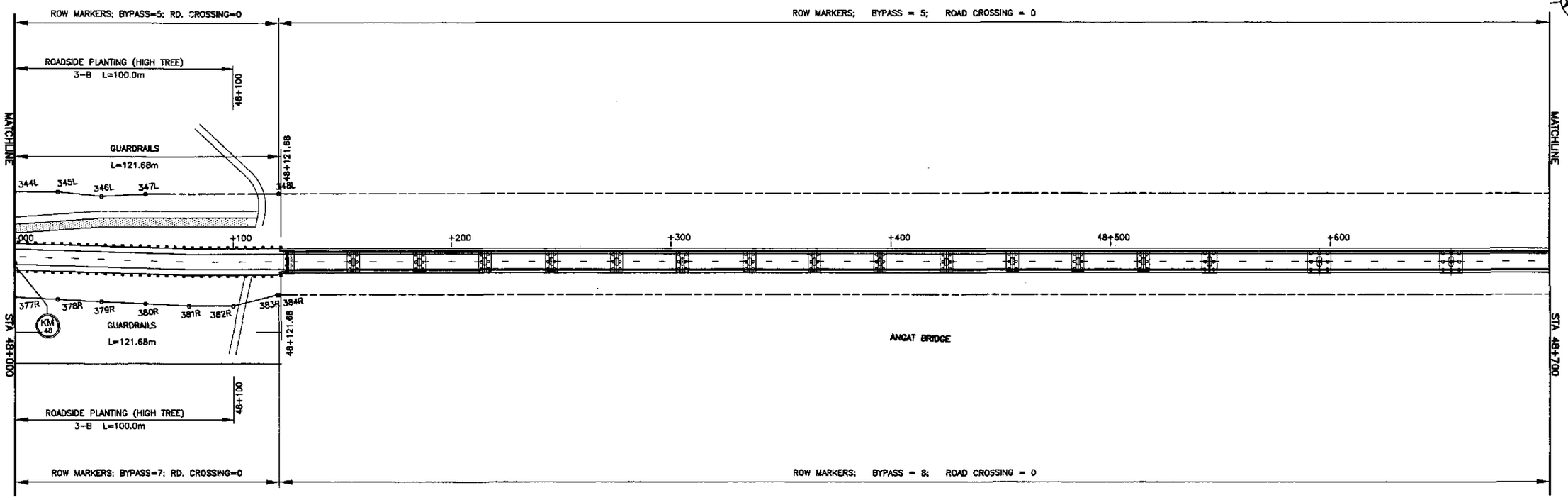

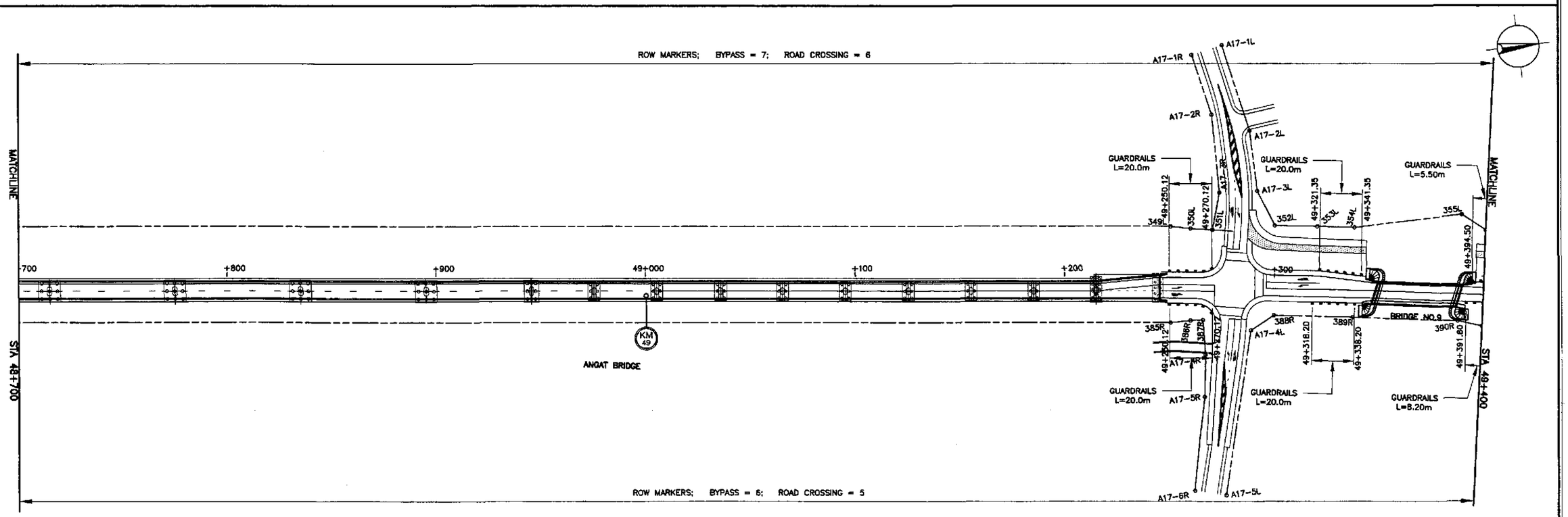

JICA
JAPAN INTERNATIONAL COOPERATION AGENCY

KEI KATAHIRA & ENGINEERS INTERNATIONAL
YEC YACHIYO ENGINEERING CO., LTD.

	DATE	SIGNATURE
DESIGNED	9/21/02	S. LUNA
CHECKED	9/22/02	S. ROSE
SUBMITTED	9/24/02	TEAM LEADER

REPUBLIC OF THE PHILIPPINES
DEPARTMENT OF PUBLIC WORKS AND HIGHWAYS

PJHL – PMO	BUREAU OF DESIGN		OFFICE OF THE SECRETARY	
Submitted By:	Reviewed By:	Recommended By:	Recommended By: (See cover sheet for Signature)	Approved By: (See cover sheet for Signature/Approved)
DANILO C. TRAJANO	JOSEFINA M. ALAGAR	GILBERTO S. REYES	MANUEL M. BONDAN	SIMEON A. DATUMANONG
Project Director	Chief, Highways Division	OIC, Director IV	Undersecretary	Secretary

PROJECT AND LOCATION :
THE DETAILED DESIGN STUDY ON UPGRADING INTER-URBAN HIGHWAY SYSTEM ALONG THE PAN-PHILIPPINE HIGHWAY (Plaridel, Cabanatuan and San Jose Bypasses)
PLARIDEL BYPASS - CONTRACT PACKAGE III

SCALE : 1:1000
FULL SIZE A1

SHEET CONTENTS :
PLANTING, GUARDRAIL AND RIGHT-OF-WAY LAYOUT
(INITIAL STAGE)
STA. 48+000 - STA. 49+400

SHEET NO. : RM-05

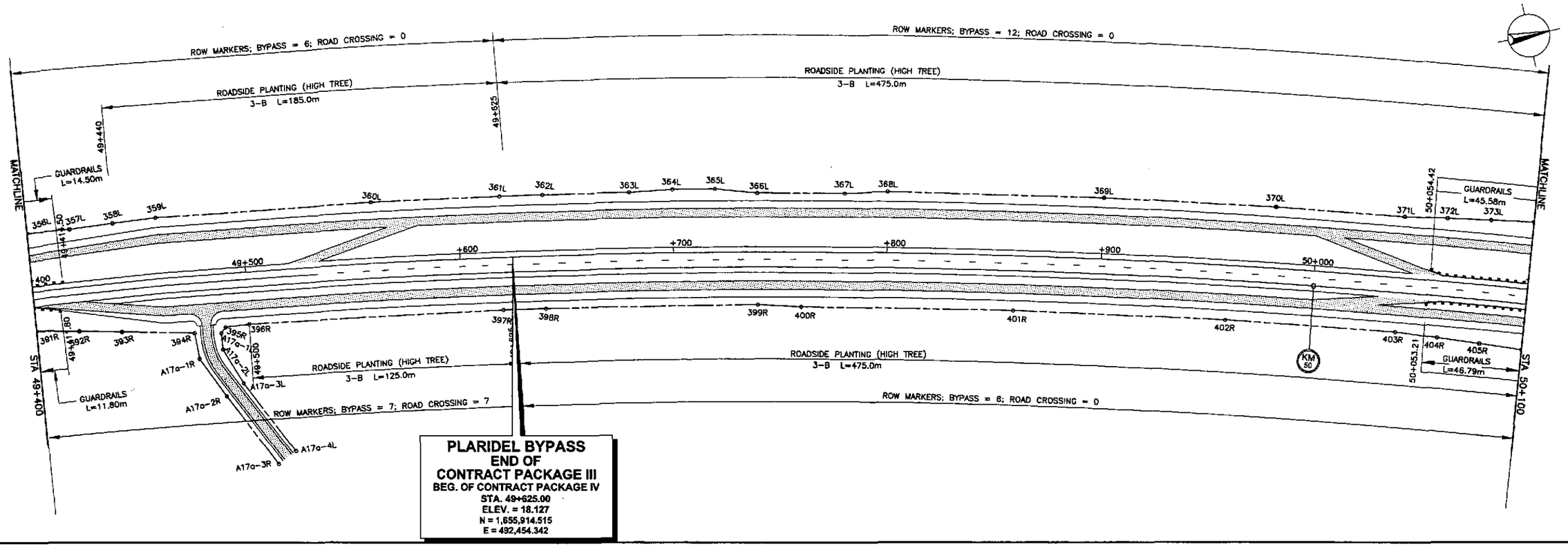

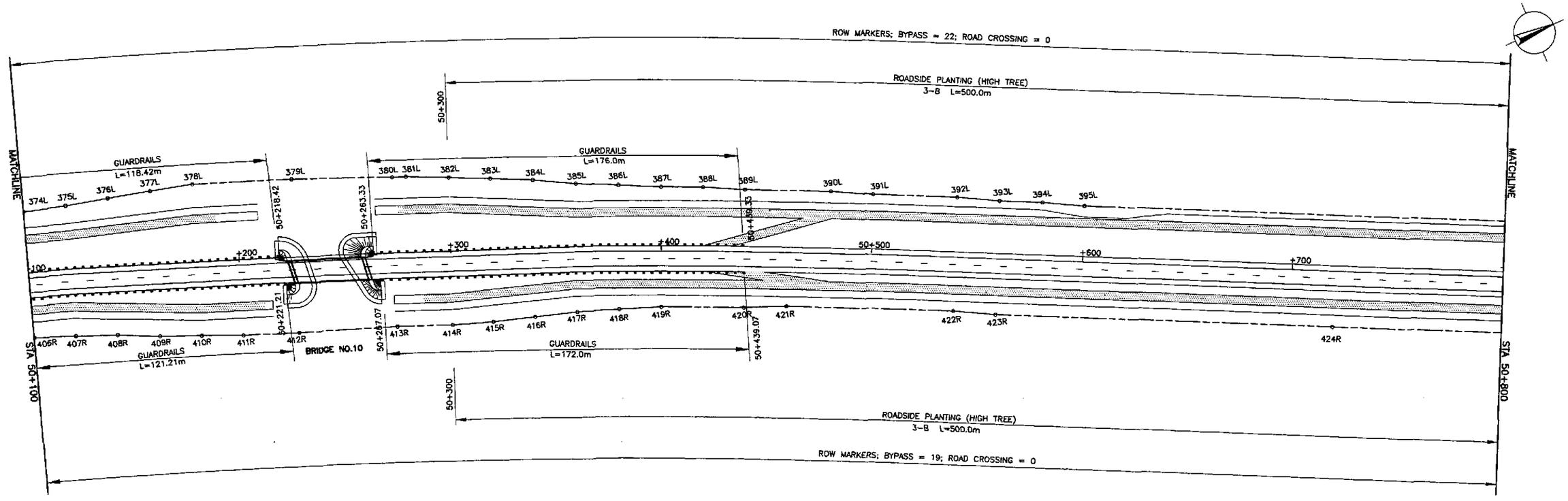

JICA
JAPAN INTERNATIONAL COOPERATION AGENCY

KEI KATAHIRA & ENGINEERS INTERNATIONAL
YEC YACHIYO ENGINEERING CO., LTD.

	DATE	SIGNATURE
DESIGNED	9/21/02	S. LUNA
CHECKED	9/23/02	S. GOSE
SUBMITTED	10/14/02	TEAM LEADER

REPUBLIC OF THE PHILIPPINES
DEPARTMENT OF PUBLIC WORKS AND HIGHWAYS

PJHL - PMO	BUREAU OF DESIGN		OFFICE OF THE SECRETARY	
Submitted By:	Reviewed By:	Recommended By:	Recommended By: (See cover sheet for Signature)	Approved By: (See cover sheet for Signature/Approval)
DANILO C. TRAJANO	JOSEFINA M. ALAGAR	GILBERTO S. REYES	MANUEL M. BONDAN	SIMEON A. DATUMANONG
Project Director	Chief, Highways Division	OIC, Director IV	Undersecretary	Secretary

PROJECT AND LOCATION :
THE DETAILED DESIGN STUDY ON UPGRADING INTER-URBAN HIGHWAY SYSTEM ALONG THE PAN-PHILIPPINE HIGHWAY (Plaridel, Cabanatuan and San Jose Bypasses)
PLARIDEL BYPASS - CONTRACT PACKAGE III

SCALE : 1:1000 FULL SIZE A1

SHEET CONTENTS :
PLANTING, GUARDRAIL AND RIGHT-OF-WAY LAYOUT
(INITIAL STAGE)
STA. 49+400 - STA. 49+625

SHEET NO. : RM-06

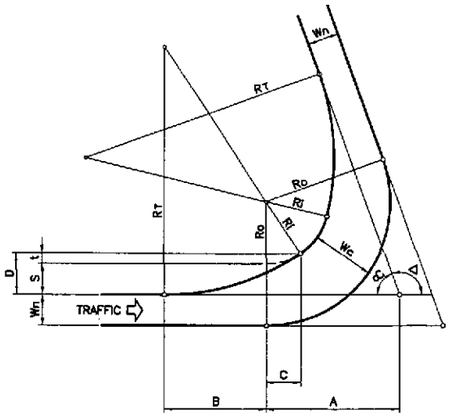

NOTES:

- RELATIVE PATHS OF LEFT TURNING VEHICLES ARE IMAGINARY ONLY; OVERALL, THESE WILL DETERMINE THE CONFIGURATION OF CHANNELI-ZATION ISLANDS IN INTERSECTION DESIGN.
- Ro AS DEFINED BY CONDITION OBTAINING AND Wc IN CONFORMANCE WITH DESIGN VEHICLES AND Ro.

(ADOPTED FROM JAPANESE STANDARDS USE IN OTHER PROJECTS.)

WHERE:

Wn = LANE WIDTH (NORMAL)
Wc = LANE WIDTH (TURNING)
Δ = INTERSECTION ANGLE
Ro = OUTER RADIUS
Ri = INNER RADIUS
RT = TRANSITION RADIUS
αC = 180° −

FORMULAS :

Ri = Ro−Wc
RT = nRi (n=3)
S = Wc−Wn
t = S/(n−1)
A = (Ri+S) COT αC/2
B = $\sqrt{2\ (R_T - R_i)\ S - S^2}$
C = B/(n−1)
D = S + t

4 RS-01 LEFT TURN LANE/S ELEMENTS THREE CENTERED CURVE-SYMMETRICAL

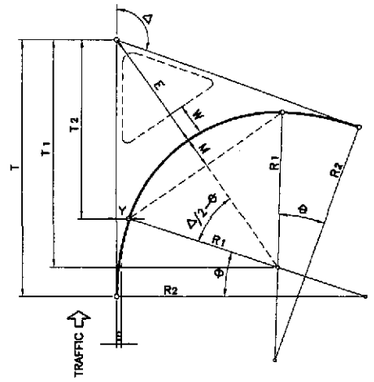

NOTES:

- FORMULAS DERIVED BELOW ARE FOR FIELD LAYOUT PURPOSE (DRAWING LAYOUT BY GRAPHICAL SOLUTION ONLY.)
- DESIGN RADII (R1, R2 & R3) AND OFFSET S AS WELL AS LANE WIDTH W (WHERE CORNER ISLANDS ARE REQUIRED UNDER CONDITIONS OBTAINING) AS BASED ON VALUES SET BY THE TEAM'S "A GUIDE TO TRAFFIC ENGINEERING AND MANAGEMENT TECHNIQUES".

WHERE:

Δ = INTERSECTION ANGLE
R1 = INNER RADIUS
R2 = TRANSITION RADIUS
S = OFFSET OF INNER CIRCULAR CURVE FROM TANGENTS

FORMULAS :

T1 = (R1+S) TAN Δ/2
T = T1 + (R2−R1) SIN θ
T2 = T1−R1 SIN θ
Y = (R1+S) − R1 COS θ
E = $\frac{R_1+S}{\cos \Delta/2}$ − R1
M = R1−R1 COS (Δ/2−θ)
θ = $\cos^{-1}\left(\frac{R_2-R_1-S}{R_2-R_1}\right)$

5 RS-01 RIGHT TURN/S ELEMENTS THREE CENTERED CURVE-SYMMETRICAL

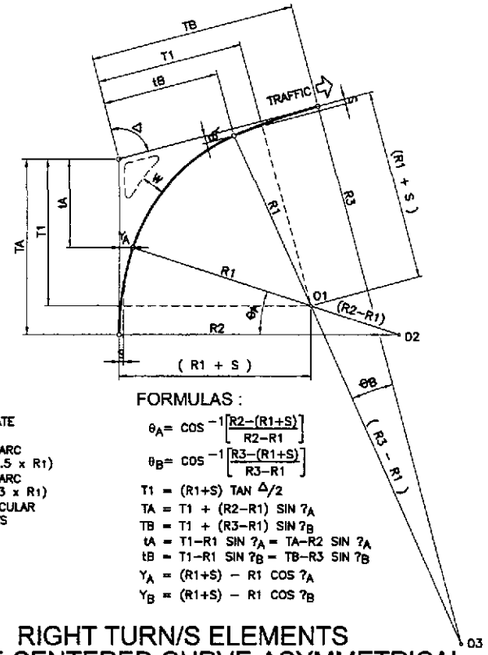

WHERE:

R1 = RADIUS OF INTERMEDIATE CIRCULAR ARC
R2 = RADIUS OF CIRCULAR ARC ON APPROACH LEG (1.5 x R1)
R3 = RADIUS OF CIRCULAR ARC ON DEPARTURE LEG (3 x R1)
S = OFFSET OF INNER CIRCULAR CURVE FROM TANGENTS
Δ = INTERSECTION ANGLE

FORMULAS :

$\theta_A = \cos^{-1}\left[\frac{R_2-(R_1+S)}{R_2-R_1}\right]$
$\theta_B = \cos^{-1}\left[\frac{R_3-(R_1+S)}{R_3-R_1}\right]$
T1 = (R1+S) TAN Δ/2
TA = T1 + (R2−R1) SIN ?A
TB = T1 + (R3−R1) SIN ?B
tA = T1−R1 SIN ?A = TA−R2 SIN ?A
tB = T1−R1 SIN ?B = TB−R3 SIN ?B
YA = (R1+S) − R1 COS ?A
YB = (R1+S) − R1 COS ?B

6 RS-01 RIGHT TURN/S ELEMENTS THREE CENTERED CURVE-ASYMMETRICAL

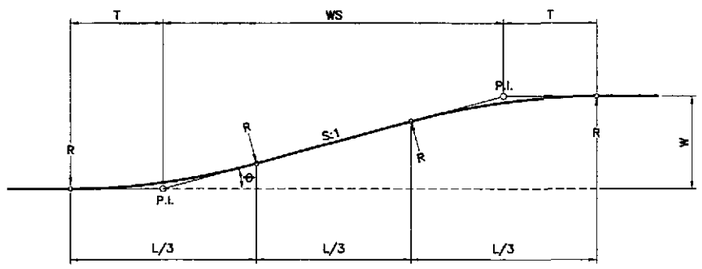

FORMULAS :

θ = $\tan^{-1}$ 1/S (TAPER RATE S:1)
T = $\frac{WS}{3 \cos \theta + 1}$
L/3 = T (COS θ + 1)
R = $\frac{T}{\tan \theta/2}$

APPROX.

T = L/6
θ = $\tan^{-1}$W/4T

OPERATING SPEED	S VALUE
50 KPH	8
60 KPH	(10)
70 KPH	(12.5)
80 KPH	15
PARKING TURNOUT (ENTRANCE / EXIT)	2
BUS TURNOUT (DESIRABLE MIN)	4

(S VALUE SHOWN IN PARENTHESIS WERE INTERPOLATED FROM AASHTO)

1 RS-01 ROADWAY TAPERING-L\3 TAN SECTION
(CIRCULAR CURVE ROUNDING)

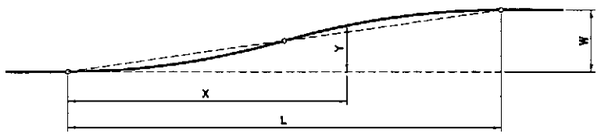

FORMULAS :

L = CWS
(C=1 MINIMUM)
(C=2 DESIRABLE)
Y = KW

WHERE:

L = LENGTH OF FLARE
W = WIDENING (MAX. OFFSET)
S = TAPER RATE (HOR:VER)
X = DISTANCE ALONG BASELINE
Y = OFFSET FROM BASELINE

LAYOUT BY OFFSET

X/L	0.00	0.05	0.10	0.15	0.20	0.25	0.30	0.35	0.40	0.45	0.50	0.55	0.60	0.65	0.70	0.75	0.80	0.85	0.90	0.95	1.00
K	0.000	0.005	0.020	0.045	0.080	0.125	0.180	0.245	0.320	0.405	0.500	0.595	0.680	0.755	0.820	0.875	0.920	0.955	0.980	0.995	1.000

2 RS-01 ROADWAY TAPERING REVERSED PARABOLIC CURVE FLARES-SYMMETRICAL
(BY OFFSET)

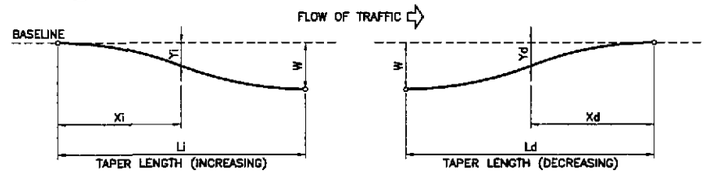

INCREASING			
Xi / Li	K	Xi / Li	K
0.00	0.000	0.52	0.5103
0.02	0.0010	0.54	0.5470
0.04	0.0020	0.56	0.5836
0.06	0.0047	0.58	0.6194
0.08	0.0077	0.60	0.6548
0.10	0.0114	0.62	0.6888
0.12	0.0156	0.64	0.7217
0.14	0.0217	0.66	0.7522
0.16	0.0300	0.68	0.7789
0.18	0.0390	0.70	0.8050
0.20	0.0499	0.72	0.8286
0.22	0.0612	0.74	0.8521
0.24	0.0760	0.76	0.8741
0.26	0.0908	0.78	0.8947
0.28	0.1110	0.80	0.9128
0.30	0.1315	0.82	0.9293
0.32	0.1574	0.84	0.9440
0.34	0.1849	0.86	0.9580
0.36	0.2161	0.88	0.9691
0.38	0.2496	0.90	0.9775
0.40	0.2846	0.92	0.9849
0.42	0.3215	0.94	0.9903
0.44	0.3586	0.96	0.9952
0.46	0.3965	0.98	0.9982
0.48	0.4344	1.00	1.0000
0.50	1.4724		

WHERE:

W = FULL WIDENING
L = LENGTH OF TAPERING/ TRANSITION
Y = WIDENING/ OFFSET FROM BASELINE @ X DISTANCE
FOR $\frac{X}{L}$: Y = KW

DECREASING			
Xd / Ld	K	Xd / Ld	K
0.00	1.0000	0.52	0.1967
0.02	0.9964	0.54	0.1784
0.04	0.9905	0.56	0.1613
0.06	0.9810	0.58	0.1453
0.08	0.9660	0.60	0.1304
0.10	0.9438	0.62	0.1162
0.12	0.9200	0.64	0.1034
0.14	0.8920	0.66	0.0916
0.16	0.8602	0.68	0.0807
0.18	0.8238	0.70	0.0708
0.20	0.7816	0.72	0.0622
0.22	0.7324	0.74	0.0543
0.24	0.6822	0.76	0.0473
0.26	0.6340	0.78	0.0407
0.28	0.5848	0.80	0.0348
0.30	0.5365	0.82	0.0288
0.32	0.4912	0.84	0.0236
0.34	0.4478	0.86	0.0190
0.36	0.4092	0.88	0.0150
0.38	0.3748	0.90	0.0116
0.40	0.3443	0.92	0.0082
0.42	0.3144	0.94	0.0052
0.44	0.2868	0.96	0.0026
0.46	0.2610	0.98	0.0012
0.48	0.2373	1.00	0.0000
0.50	0.2163		

3 RS-01 ROADWAY TAPERING REVERSED PARABOLIC CURVE ASYMMETRICAL
(BY OFFSET)

JICA
JAPAN INTERNATIONAL COOPERATION AGENCY
KEI KATAHIRA & ENGINEERS INTERNATIONAL
YEC YACHIYO ENGINEERING CO., LTD.

	DATE	SIGNATURE
DESIGNED	9/21/02	A. ACACIO
CHECKED	9/23/02	S. GOSE
SUBMITTED	10/14/02	M. KUCHIKI TEAM LEADER

REPUBLIC OF THE PHILIPPINES
DEPARTMENT OF PUBLIC WORKS AND HIGHWAYS

PJHL – PMO	BUREAU OF DESIGN		OFFICE OF THE SECRETARY	
Submitted By:	Reviewed By:	Recommended By:	Recommended By: (See cover sheet for Signature)	Approved By: (See cover sheet for Signature/Approval)
DANILO C. TRAJANO Project Director	JOSEFINA M. ALAGAR Chief, Highways Division	GILBERTO S. REYES OIC, Director IV	MANUEL M. BONGAN Undersecretary	SIMEON A. DATUMANONG Secretary

PROJECT AND LOCATION :
THE DETAILED DESIGN STUDY ON UPGRADING INTER-URBAN HIGHWAY SYSTEM ALONG THE PAN-PHILIPPINE HIGHWAY (Plaridel, Cabanatuan and San Jose Bypasses)
PLARIDEL BYPASS - CONTRACT PACKAGE III

SCALE : NOT TO SCALE / FULL SIZE A1

SHEET CONTENTS : GEOMETRIC DESIGN STANDARD - 1
HORIZONTAL ALIGNMENT/ CURVE EASEMENTS

SHEET NO. : RS-01

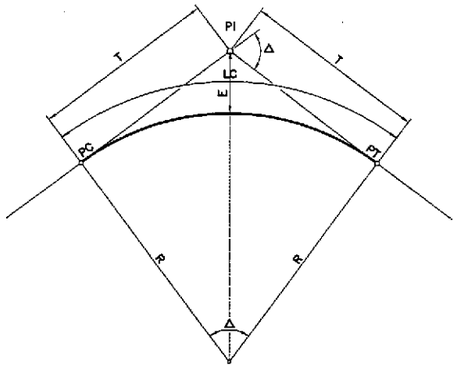

WHERE :

- PI = POINT OF INTERSECTION
- Δ = INTERSECTION ANGLE
- R = CURVE RADIUS
- T = TANGENT LENGTH
- LC = CURVE LENGTH
- E = EXTERNAL DISTANCE
- PC = BEGINNING OF CIRCULAR CURVE
- PT = END OF CIRCULAR CURVE

FORMULAS:

$T = R\,(\tan \Delta/2)$

$LC = \frac{\pi R \Delta}{180}$

$E = T(\tan \Delta/4)$

NOTE :

NO HORIZONTAL CURVE IS REQUIRED WHEN THE INTERSECTION ANGLE IS LESS THAN ONE DEGREE (1°)

2 / RS-02 HORIZONTAL CURVE (CIRCULAR)

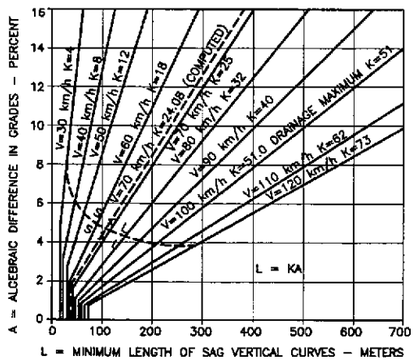

5a / RS-02 MAIN BYPASS

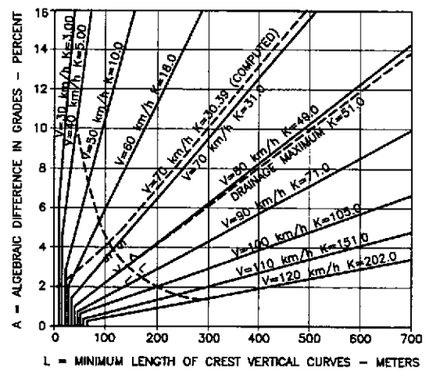

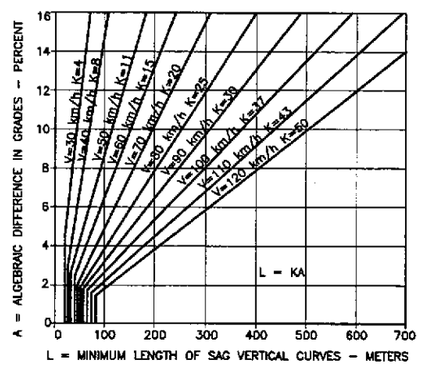

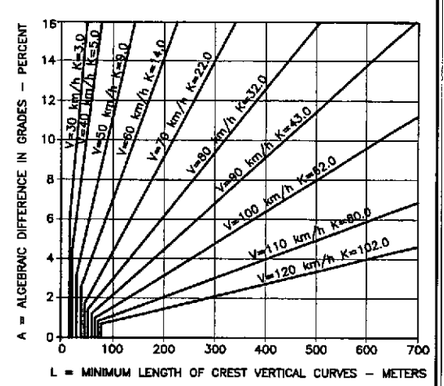

5b / RS-02 ACCESS ROADS

5 / RS-02 DESIGN CONTROLS FOR VERTICAL CURVES

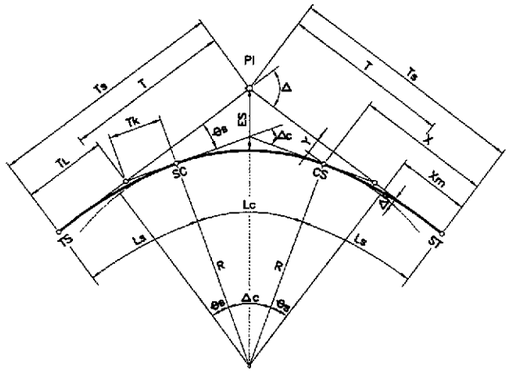

FORMULAS:

$A^2 = R(Ls)$

$\theta s = Ls(D/40)$

$x = Ls\left(1 - \frac{Ls^2}{40R^2}\right)$

$y = \frac{Ls^2}{6R}\left(1 - \frac{Ls^2}{56R^2}\right)$

$\Delta R = y + R \cos \theta s - R$

$Xm = x - R \sin \theta s$

$T = (R + \Delta R)\tan \Delta/2$

$Ts = Xm + T$

$\Delta c = \Delta - 2\theta s$

$Lc = \pi R\, \Delta c/180$

$TL = x - (y/\tan \theta s)$

$Tk = \frac{y}{\sin \theta s}$

$Es = \left[\left(R + \frac{y}{4}\right)\sec\frac{\Delta}{2}\right] - R$

WHERE :

- PI = POINT OF INTERSECTION
- Δ = INTERSECTION ANGLE
- R = CURVE RADIUS
- Es = EXTERNAL DISTANCE
- Ls = LENGTH OF SPIRAL
- A = PARAMETER OF CLOTHOID
- θs = SPIRAL ANGLE
- X,Y = COORDINATES OF POINTS SC AND CS WITH RESPECT TO MAIN TANGENTS
- ΔR = OFFSET BETWEEN CIRCULAR CURVE AND MAIN TANGENT ("THROW" OF SPIRAL)
- Xm = DISTANCE FROM TS OR ST TO POINT OF "THROW"
- Ts = TOTAL TANGENT DISTANCE
- TL = LONG TANGENT OF SPIRAL
- Tk = SHORT TANGENT OF SPIRAL
- Ls = LENGTH OF SPIRAL
- Δc = CENTRAL ANGLE OF CIRCULAR CURVE
- Lc = LENGTH OF CIRCULAR CURVE
- TS = BEGINNING OF TRANSITION CURVE
- SC = BEGINNING OF CIRCULAR CURVE
- CS = END OF CIRCULAR CURVE
- ST = END OF TRANSITION CURVE

1 / RS-02 HORIZONTAL CURVE WITH TRANSITION (CLOTHOID SPIRAL)

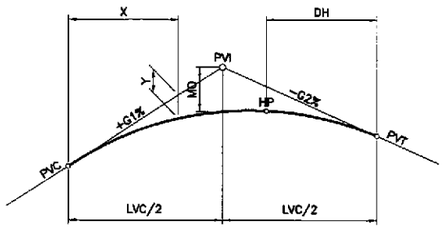

WHERE :

- PVI = VERTICAL POINT OF INTERSECTION
- PVC = VERTICAL POINT OF CURVATURE
- PVT = VERTICAL POINT OF TANGENCY
- LVC = LENGTH OF VERTICAL CURVE
- G1, G2 = TANGENT GRADES IN PERCENT
- MO = MIDDLE ORDINATE
- X = DISTANCE FROM PVC TO PVT TO ANY POINT OF CURVE
- Y = VERTICAL OFFSET AT SAID DISTANCE "X"
- HP = HIGH POINT OF CURVE
- DH = DISTANCE OF "HP" FROM CURVE END RECKONED FROM FLATTER GRADE

FOR SYMMETRICAL VERTICAL PARABOLIC CURVES :

$MO = \frac{(G1-G2)}{100} \cdot \frac{L}{8}$

$Yx = \frac{(G1-G2)}{100} \cdot \frac{x^2}{2LVC}$

$DH = \frac{GLVC}{(G1-G2)}$

(WHERE G IS THE LESSER GRADE)

NOTES :

1. SIMILARLY APPLIES TO LP (LOW POINT) OF SAG VERTICAL CURVES
2. NO VERTICAL CURVE IS REQUIRED WHERE THE ALGEBRAIC DIFFERENCE IN GRADE IS 0.50% OR LESS

3 / RS-02 VERTICAL PARABOLIC CURVE (SYMMETRICAL)

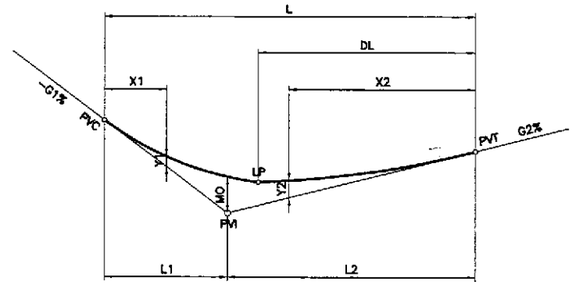

WHERE :

- L1 = SHORT SIDE OF VERTICAL CURVE LENGTH
- L2 = LONG SIDE OF VERTICAL CURVE LENGTH
- LP = LOW POINT OF CURVE
- DL = DISTANCE OF LP FROM CURVE END RECKONED FROM FLATTER GRADE

ALL OTHER NOMENCLATURE SAME AS SYMMETRICAL PARABOLIC CURVE

FOR ASYMMETRICAL VERTICAL PARABOLIC CURVES :

$MO = \frac{(G1-G2)}{100} \cdot \frac{L1\ L2}{2L}$

$Y2 = \frac{X2^2}{L2^2} \cdot MO$

$Y1 = \frac{X1^2}{L1^2} \cdot MO$

(FLATTER GRADE SIDE VALUES FOR NUMERATOR & VICE VERSA)

$DL = \frac{G2\ L2}{L1} \cdot K$

$K = \frac{L}{G1+G2}$

NOTES :

1. SIMILARLY APPLIES TO LP (LOW POINT) OF SAG VERTICAL CURVES
2. NO VERTICAL CURVE IS REQUIRED WHERE THE ALGEBRAIC DIFFERENCE IN GRADE IS 0.50% OR LESS

4 / RS-02 VERTICAL PARABOLIC CURVE (ASYMMETRICAL)

JICA — JAPAN INTERNATIONAL COOPERATION AGENCY

KATAHIRA & ENGINEERS INTERNATIONAL — YACHIYO ENGINEERING CO., LTD.

	DATE	SIGNATURE
DESIGNED	9/21/02	A. ACACIO
CHECKED	9/23/02	S. POSE
SUBMITTED	10/14/02	V. KUBERA, TEAM LEADER

REPUBLIC OF THE PHILIPPINES
DEPARTMENT OF PUBLIC WORKS AND HIGHWAYS

PJHL – PMO	BUREAU OF DESIGN		OFFICE OF THE SECRETARY	
Submitted By:	Reviewed By:	Recommended By:	Recommended By: (See cover sheet for Signature)	Approved By: (See cover sheet for Signature/Approval)
DANILO C. TRAJANO, Project Director	JOSEFINA M. ALAGAR, Chief, Highways Division	GILBERTO S. REYES, DIC, Director IV	MANUEL M. BONGAN, Undersecretary	SIMEON A. DATUMANONG, Secretary

PROJECT AND LOCATION : THE DETAILED DESIGN STUDY ON UPGRADING INTER-URBAN HIGHWAY SYSTEM ALONG THE PAN-PHILIPPINE HIGHWAY (Plaridel, Cabanatuan and San Jose Bypasses)

PLARIDEL BYPASS - CONTRACT PACKAGE III

SCALE : NOT TO SCALE — FULL SIZE A1

SHEET CONTENTS : GEOMETRIC DESIGN STANDARD - 2 HORIZONTAL AND VERTICAL CURVES

SHEET NO. : RS-02

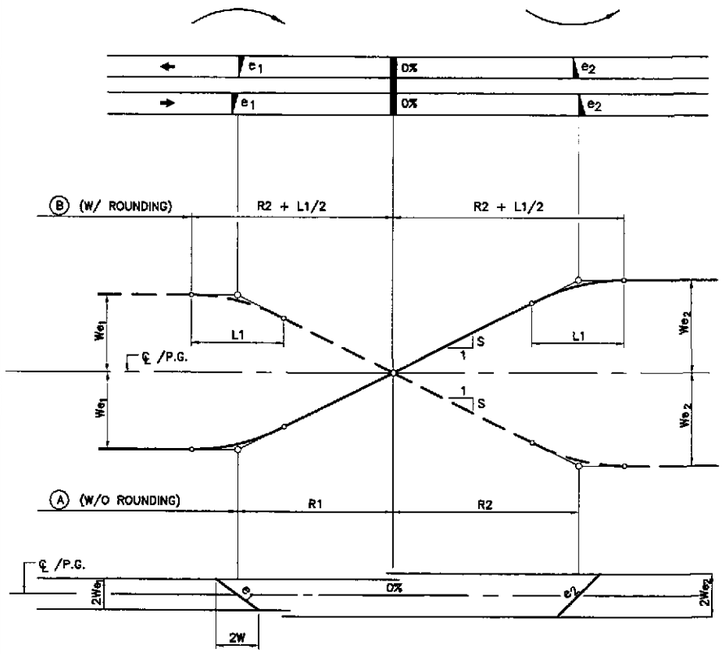

$R1 = \frac{We_1}{S}$

$R2 = \frac{We_2}{S}$

$L1 = \frac{Wnc}{S}$

WHERE :

R1 = LENGTH OF SUPERELEV. RUNOFF (1st CURVE)
R2 = LENGTH OF SUPERELEV. RUNOFF (2nd CURVE)
L1 = LENGTH OF ROUNDING
ALL OTHER NOMENCLATURE THE SAME

2 RS-03 SUPERELEVATION TRANSITION-REVERSE CURVE (MAIN ROAD)

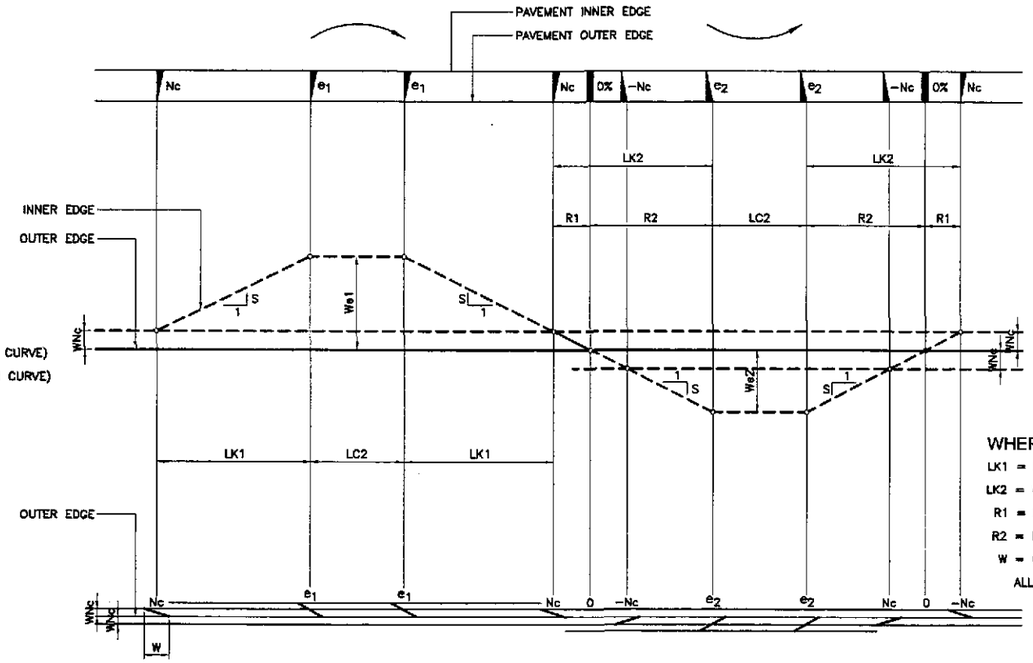

$LK1 = \frac{W}{S}\ (e_1 - NC)$

$R1 = \frac{Wnc}{S}$

$R2 = \frac{We_2}{S}$

$LK2 = R1+R2 = \frac{W}{S}\ (Nc+e_2)$

WHERE :

LK1 = MIN. LENGTH OF EASEMENT/CLOTHOID (1st CURVE)
LK2 = MIN. LENGTH OF EASEMENT/CLOTHOID (2nd CURVE)
R1 = LENGTH OF SUPERELEVATION RUNOUT
R2 = LENGTH OF SUPERELEVATION RUNOFF (2nd CURVE)
W = CARRIAGEWAY (NORMAL)
ALL OTHER NOMENCLATURE THE SAME

3 RS-03 SUPERELEVATION TRANSITION-(RAMPS)

PAVEMENT REVOLVED ABOUT OUTER EDGE

$A^2 = R\ LK$

A = CLOTHOID PARAMETER

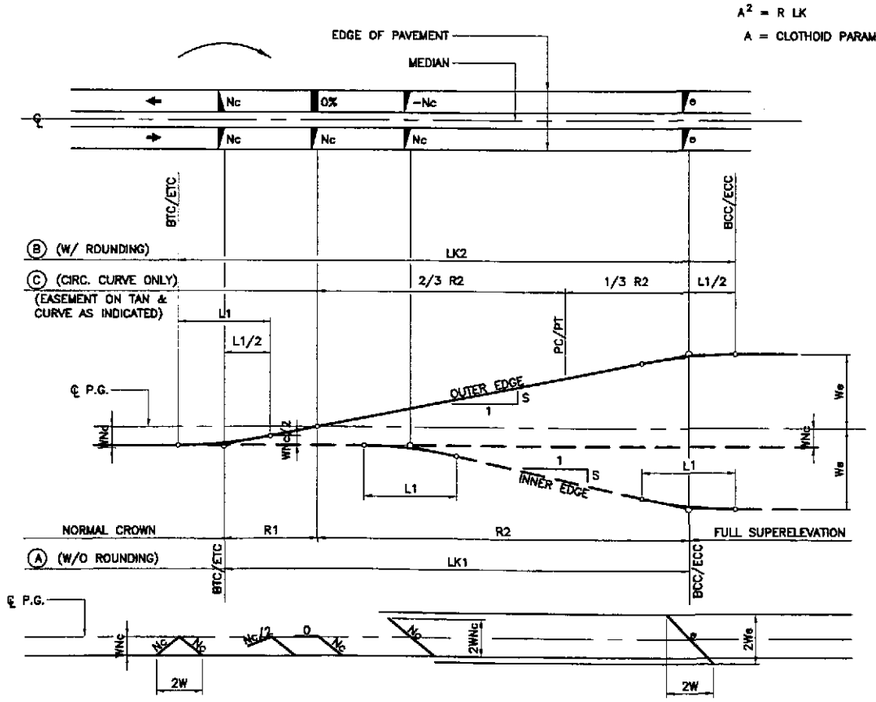

$R1 = \frac{WNc}{S}$

$R2 = \frac{We}{S}$

$L1 = \frac{Wnc}{S}$

$LK1 = R1+R2 = \frac{W}{S}\ (Nc+e)$ (A)

$LK2 = L1+LK1 = \frac{W}{S}\ (2Nc+e)$ (B)

WHERE :

LK1 = MIN. LENGTH OF EASEMENT/CLOTHOID (W/O ROUNDING L1)
LK2 = MIN. LENGTH OF EASEMENT/CLOTHOID (W/ ROUNDING)
R1 = SUPERELEVATION RUNOUT LENGTH (WITHIN CLOTHOID) *
R2 = SUPERELEVATION RUNOFF LENGTH
L1 = LENGTH OF ROUNDING
W = CARRIAGEWAY (ONE DIRECTION)
e = SUPERELEVATION RATE
Nc = NORMAL CROWN SLOPE
S = RELATIVE SLOPE OF EDGES W/ ℄

* OTHER AUTHORITIES PLACE R1 ALONG THE TANGENT

1 RS-03 SUPERELEVATION TRANSITION (MAIN ROAD)

S VALUE

(INTERPOLATED FROM AASHTO)

DESIGN SPEED Km/h	40	50	60	70	80	90	100	110	120
100 S	0.70	0.85	0.60	0.55	0.50	0.48	0.45	0.42	0.40

SUPERELEVATION ``e" RATES

MAIN ROAD

D	R	V=80 KPH e_{max}= 0.060
0'-10'	6,875.36	NC (0.004)
-20	3,437.78	NC (0.008)
-30	2,291.83	NC (0.013)
-40	1,718.87	RC (0.016)
-50	1,375.10	0.021
1'-00'	1,145.92	0.024
-10	982.21	0.027
-20	859.44	0.030
-30	763.94	0.033
-40	687.55	0.036
-50	625.05	0.039
2'-00'	572.96	0.041
-10	528.68	0.044
-20	491.11	0.046
-30	458.37	0.048
-40	429.72	0.050
-50	404.44	0.052
3'-00'	381.97	0.053
-10	361.87	0.055
-20	343.78	0.056
-30	327.40	0.057
-40	312.52	0.058
-50	298.93	0.059
4'-00'	286.48	0.059
-10	275.02	0.060
-20	264.44	0.060
-30	254.65	0.060

RAMPS

D	R	V=40 KPH e_{max}= 0.070
0'-30'	2,291.83	NC (0.003)
1'-00'	1,145.92	NC (0.007)
-30	763.94	NC (0.010)
2'-00'	572.96	RC (0.013)
-30	458.37	RC (0.016)
3'-00'	361.97	RC (0.019)
-30	327.40	(0.022)
4'-00'	286.48	0.024
-30	254.65	0.027
5'-00'	229.18	0.030
6'-00'	190.99	0.035
7'-00'	163.70	0.039
8'-00'	143.24	0.043
9'-00'	127.32	0.047
10'-00'	114.59	0.050
11'-00'	104.17	0.054
12'-00'	104.17	0.057
13'-00'	86.15	0.060
14'-00'	81.85	0.062
15'-00'	76.39	0.065
16'-00'	71.62	0.066
17'-00'	67.42	0.068
18'-00'	63.66	0.069
19'-00'	60.31	0.069
20'-00'	57.30	0.070
-30	55.90	0.070
-50	55.00	0.070

NC = NORMAL CROWN SLOPE (0.020) (WHERE THEORETICAL e ≤ NC/2)
RC = REMOVE ADVERSE CROWN & SUPERELEVATE AT NC (WHERE THEORETICAL e > NC/2)

NOTES:

1. RATE OF SUPERELEVATION "e" AS SHOWN IN TABLE.
2. ROUNDING "L1" IS OPTIONAL AND NECESSARY ONLY IF "S" IS GREATER THAN THAT SHOWN IN TABLE.
3. SIDEWALKS SHALL ALWAYS SLOPE TOWARDS THE TRAVELWAY.
4. SHOULDERS OF THE MAIN ROADS SHALL ALWAYS SLOPE OUTWARD THE TRAVELWAY IRRESPECTIVE OF THE RATE OF "e" NORMAL SHOULDER SLOPE SHALL BE THE SAME AS THE TRAVELWAY.
5. FOR THE INTERCHANGE RAMPS, TREATMENT FOR THE OUTER OR THE RIGHT SIDE SHOULDER SHALL BE THE SAME AS THE ABOVE. THE NARROWER INNER SHOULDER SHALL ALWAYS SLOPE TOWARDS THE LEFT OR THE INSIDE. WHERE "e" IS IN THE OPPOSITE DIRECTION. THE ALGEBRAIC SUM OF THE SLOPES OF THE SHOULDER AND TRAVELWAY SHALL BE EQUAL TO 8.0%.
6. SUPERELEVATION "e" RATES AS SHOWN IN TABLE ARE BASED ON A PARABOLIC FORM OF DISTRIBUTION.

JICA
JAPAN INTERNATIONAL COOPERATION AGENCY
KEI KATAHIRA & ENGINEERS INTERNATIONAL
YEC YACHIYO ENGINEERING CO., LTD.

	DATE	SIGNATURE
DESIGNED	9/21/02	ACACIO
CHECKED	9/23/02	SOSE
SUBMITTED	10/21/02	TEAM LEADER

REPUBLIC OF THE PHILIPPINES
DEPARTMENT OF PUBLIC WORKS AND HIGHWAYS

PJHL – PMO	BUREAU OF DESIGN		OFFICE OF THE SECRETARY	
Submitted By:	Reviewed By:	Recommended By:	Recommended By: (See cover sheet for Signature)	Approved By: (See cover sheet for Signature/Approval)
DANILO C. TRAJANO	JOSEFINA M. ALAGAR	GILBERTO S. REYES	MANUEL M. BONGAN	SIMEON A. DATUMANONG
Project Director	Chief, Highways Division	OIC, Director IV	Undersecretary	Secretary

PROJECT AND LOCATION :
THE DETAILED DESIGN STUDY ON UPGRADING INTER-URBAN HIGHWAY SYSTEM ALONG THE PAN-PHILIPPINE HIGHWAY (Plaridel, Cabanatuan and San Jose Bypasses)
PLARIDEL BYPASS - CONTRACT PACKAGE III

SCALE : NOT TO SCALE
FULL SIZE A1

SHEET CONTENTS :
GEOMETRIC DESIGN STANDARD - 3
SUPERELEVATION ATTAINMENT/ DETAILS
DIAGRAMATIC PROFILES/ SECTIONS

SHEET NO. : RS-03

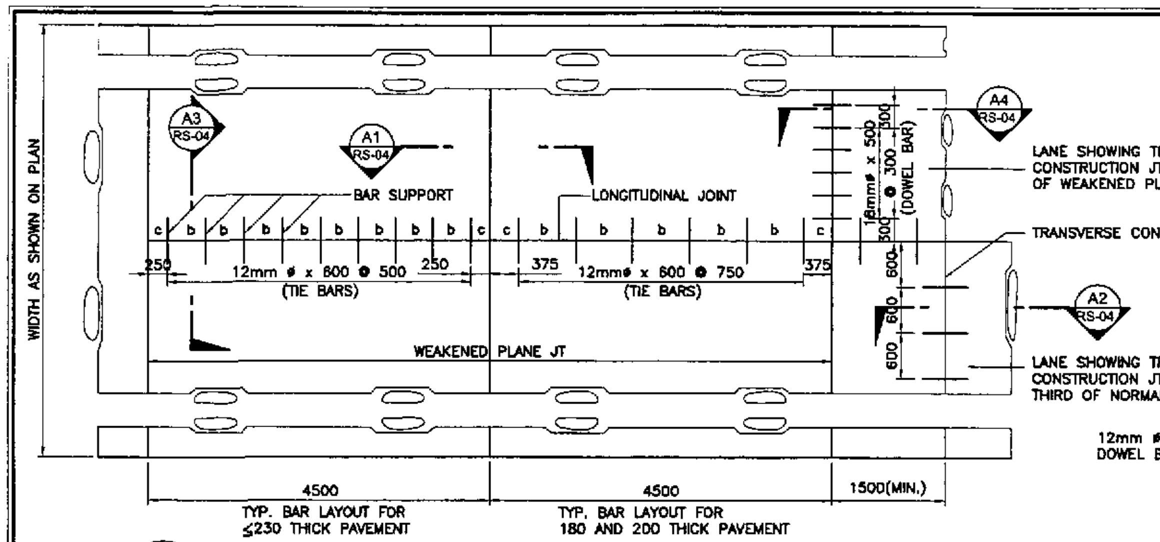

A (RS-04) TYPICAL PLAN OF TWO LANE PAVEMENT
SCALE 1:50

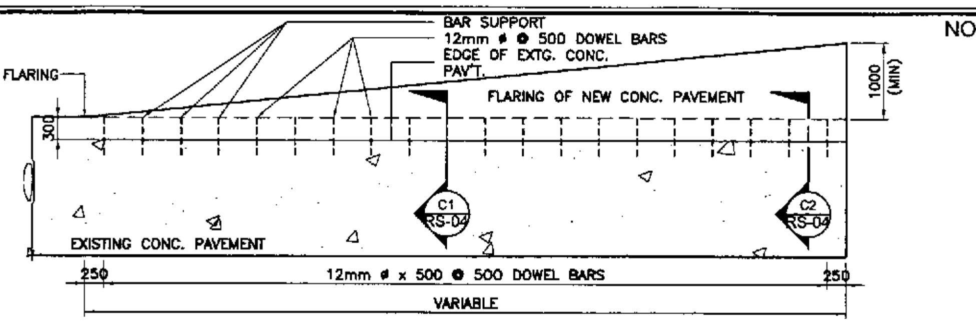

C (RS-04) PLAN (SHOWING FLARING OF EXISTING CONC. PAV'T.)
SCALE 1:50

NOTE: FOR FLARING OF EXTG. CONC. PAVEMENT THE EXISTING CONCRETE PAVEMENT SHALL BE CHIPPED OFF PERPENDICULARLY TO THE EXISTING BASE ABOUT 300mm WIDE TO A DISTANCE WHERE THE FLARE IS LESS THAN 1000mm AND NECESSARY. DOWEL BARS SHALL BE PROVIDED TO CONNECT THE NEW PAVEMENT WITH EXISTING PAVEMENT.

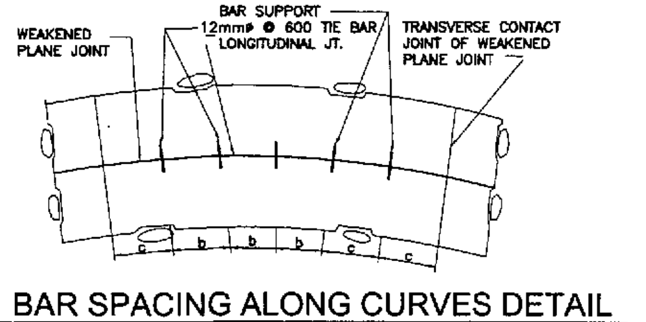

G (RS-04) BAR SPACING ALONG CURVES DETAIL
NOT TO SCALE

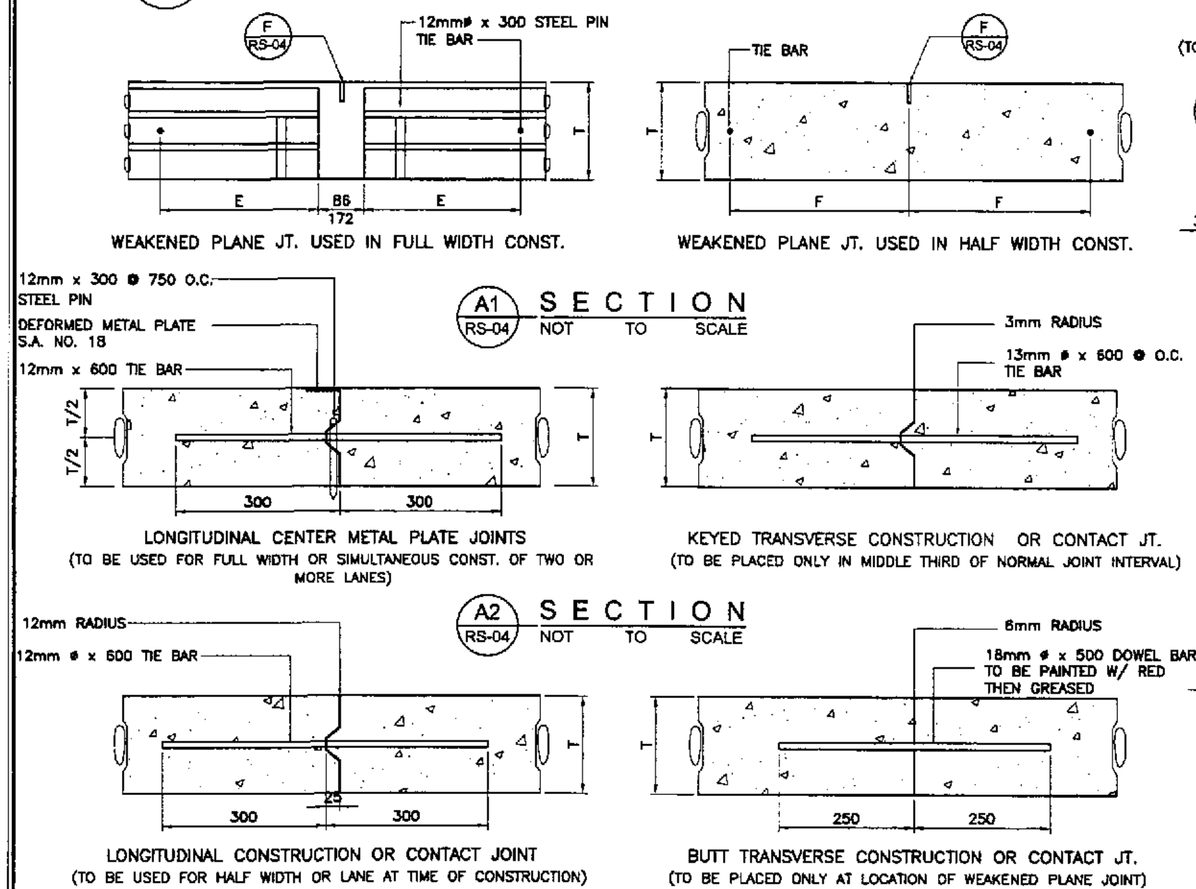

A1 (RS-04) SECTION NOT TO SCALE

A2 (RS-04) SECTION NOT TO SCALE

A3 (RS-04) SECTION NOT TO SCALE

A4 (RS-04) SECTION NOT TO SCALE

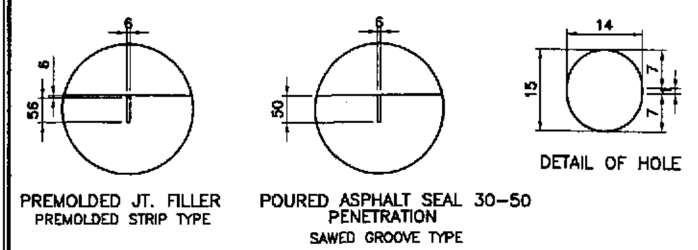

F (RS-04) WEAKENED GROOVE DETAIL
NOT TO SCALE

T	a	b	c	E	F
180	60	750	375 750	289	375
200	70	750	375 750	289	375
230	85	500	250 500	164	250
250	95	500	250 500	164	250
280	110	500	250 500	164	250

TABLE OF DIMENSIONS

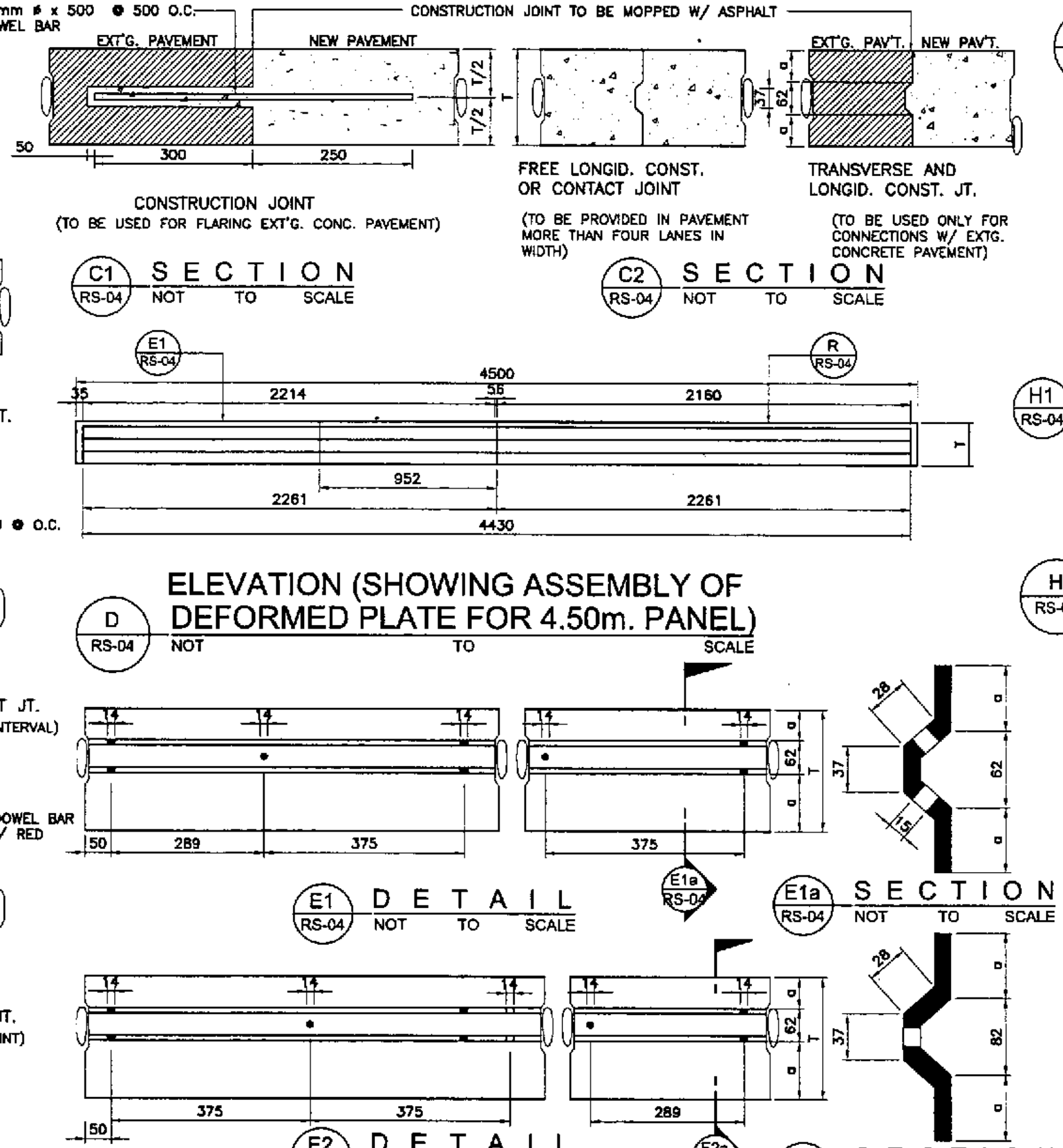

C1 (RS-04) SECTION NOT TO SCALE

C2 (RS-04) SECTION NOT TO SCALE

D (RS-04) ELEVATION (SHOWING ASSEMBLY OF DEFORMED PLATE FOR 4.50m. PANEL)
NOT TO SCALE

E1 (RS-04) DETAIL NOT TO SCALE

E1a (RS-04) SECTION NOT TO SCALE

E2 (RS-04) DETAIL NOT TO SCALE

E2a (RS-04) SECTION NOT TO SCALE

E (RS-04) METAL PLATE FOR WEAKENED JOINT
NOT TO SCALE

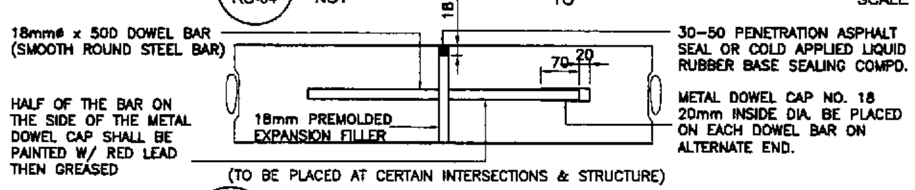

(TO BE PLACED AT CERTAIN INTERSECTIONS & STRUCTURE)

B (RS-04) DOWELLED EXPN. JOINT DETAIL
NOT TO SCALE

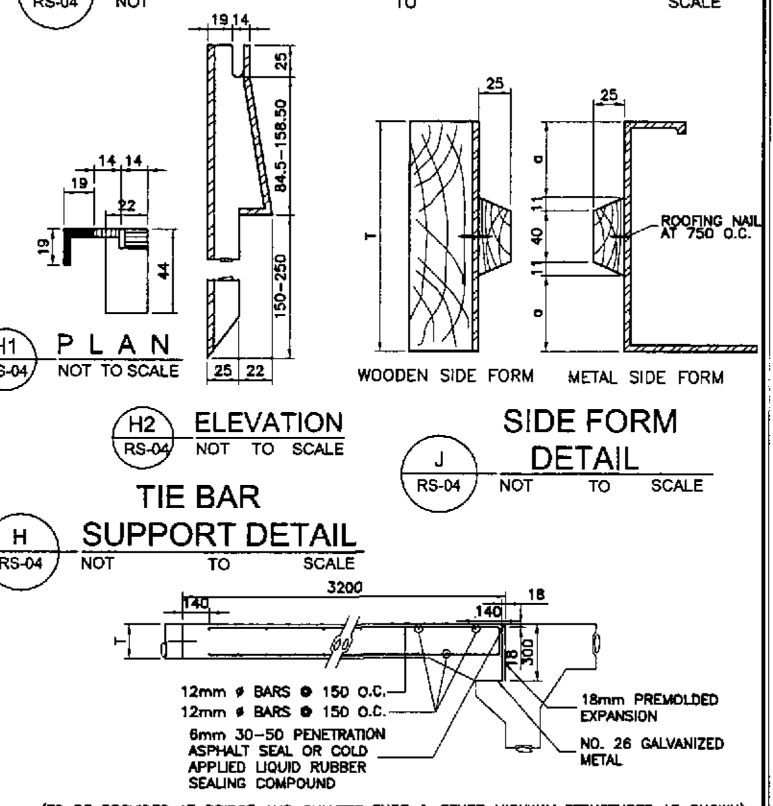

H1 (RS-04) PLAN NOT TO SCALE

H2 (RS-04) ELEVATION NOT TO SCALE

H (RS-04) TIE BAR SUPPORT DETAIL NOT TO SCALE

J (RS-04) SIDE FORM DETAIL NOT TO SCALE

(TO BE PROVIDED AT BRIDGE AND CULVERT ENDS & OTHER HIGHWAY STRUCTURES AS SHOWN)

I (RS-04) TRANSVERSE EXPN. JOINT DETAIL
NOT TO SCALE

NOTES:

1. MATERIALS AND WORKMANSHIP SHALL CONFORM WITH THE "GENERAL SPECIFICATIONS FOR ROADS AND BRIDGES 1995".
2. CONSTRUCTIONS (CONTACT) JOINTS ARE FORMED WHEN CONCRETE ON ONE SIDE OF THE JOINT IS POURED AHEAD AND ALLOWED TO SET BEFORE POURING ON THE OTHER SIDE.
3. AT CONSTRUCTION JOINT, (LONGITUDINAL OR TRANSVERSE) CARE SHOULD BE TAKEN THAT NO CONCRETE FROM THE LAST SLAB PLACED OVERHANGS ANY PORTION OF FIRST SLAB.
4. ALL BARS SHALL BE DEFORMED STEEL BARS.
5. TYPE OF WEAKENED PLANE JOINT TO BE USED SHALL BE AS SPECIFIED IN THE PLANS AND ONLY ONE TYPE SHALL BE USED FOR THE WHOLE PROJECT.
6. MATERIAL FOR THE DEFORMED METAL PLATE SHALL BE BRAND NEW SHEET METAL GAUGE NO. 18 OF IRON FREE FROM RUST AND KINKS.
7. AT LEAST SIX(6) SUCCESSIVE DOWELED BUTT JOINTS AT NORMAL JOINT SPACING, SHALL BE PROVIDED BEFORE OR AFTER AN EXPANSION JOINT.
8. THE GROVE OR CRACK ABOVE JOINT (LONGITUDINAL OR TRAVERSE) SHALL BE SEALED WITH 30-50 PENETRATION ASPHALT SEAL OR COLD APPLIED LIQUID RUBBER COMPOUND AFTER THE CONCRETE HARDENS AND BEFORE OPENING THE PAVEMENT TO TRAFFIC. PENETRATION ASPHALT SEAL ON CONCRETE PAVEMENT JOINTS SHOULD BE POURED IN SUCH MANNER THAT SPILLING WILL BE ELIMINATED/PREVENTED THUS, PROVIDE SMOOTH RIDING/LEVELLING SURFACE.
9. ALL TRANSVERSE JOINTS, EXCEPT CONSTRUCTION JOINTS, SHALL BE CONTINUOUS FROM EDGE TO EDGE.
10. ALL LONGITUDINAL JOINTS SHALL MEET AT INTERSECTIONS WITH NO GAPSOR OFFSETS.
11. WHEN WIDTH OF LANE IS THIRTY SIX(36) METERS OR LESS, SIZE OF THE BAR MAY BE REDUCED TO 12mm DIAMETER.
12. ALL DIMENSIONS ARE IN MILLIMETERS UNLESS OTHERWISE SPECIFIED.

JICA
JAPAN INTERNATIONAL COOPERATION AGENCY
KATAHIRA & ENGINEERS INTERNATIONAL
YACHIYO ENGINEERING CO., LTD.

	DATE	SIGNATURE
DESIGNED	9/21/02	ACACIO
CHECKED	9/23/02	S. JOSE
SUBMITTED	10/14/02	TEAM LEADER

REPUBLIC OF THE PHILIPPINES
DEPARTMENT OF PUBLIC WORKS AND HIGHWAYS

PJHL - PMO	BUREAU OF DESIGN		OFFICE OF THE SECRETARY	
Submitted By:	Reviewed By:	Recommended By:	Recommended By: (See cover sheet for Signature)	Approved By: (See cover sheet for Signature/Approval)
DANILO C. TRAJANO, Project Director	JOSEFINA M. ALAGAR, Chief, Highways Division	GILBERTO S. REYES, OIC, Director IV	MANUEL M. BONOAN, Undersecretary	SIMEON A. DATUMANONG, Secretary

PROJECT AND LOCATION :
THE DETAILED DESIGN STUDY ON UPGRADING INTER-URBAN HIGHWAY SYSTEM ALONG THE PAN-PHILIPPINE HIGHWAY (Plaridel, Cabanatuan and San Jose Bypasses)
PLARIDEL BYPASS - CONTRACT PACKAGE III

SCALE : NOT TO SCALE
FULL SIZE A1

SHEET CONTENTS : STANDARD PORTLAND CEMENT CONCRETE PAVEMENT

SHEET NO. : RS-04

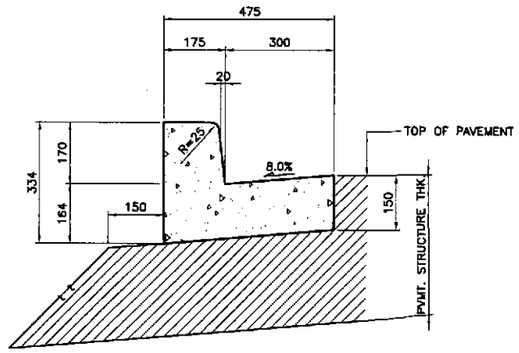

1c RS-05 TYPE "C"

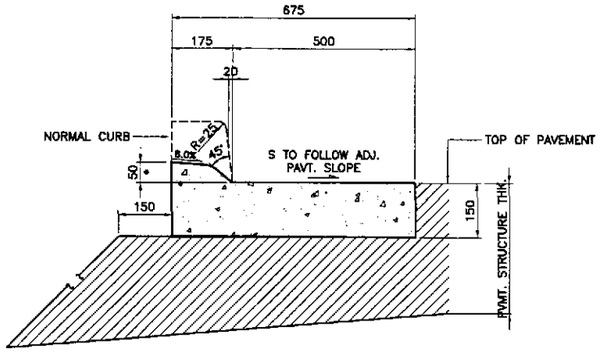

2c RS-05 TYPE "B"

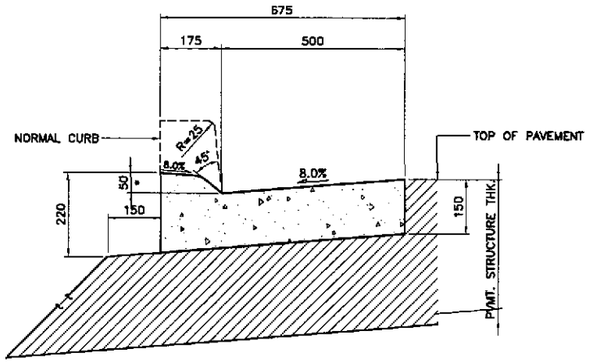

* 30 FOR RAMPS FOR PHYSICALLY HANDICAPPED

3 RS-05 CONCRETE DROP CURB AND GUTTER (MODIFIED)
NOT TO SCALE

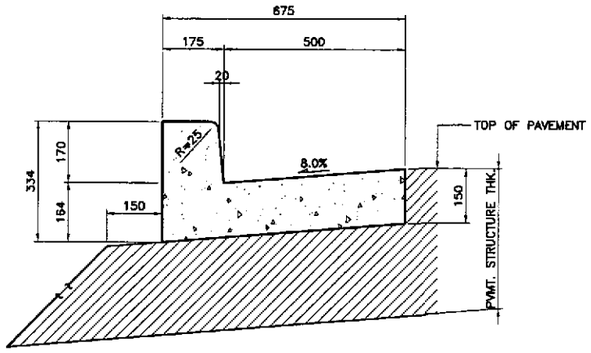

1b RS-05 TYPE "B"

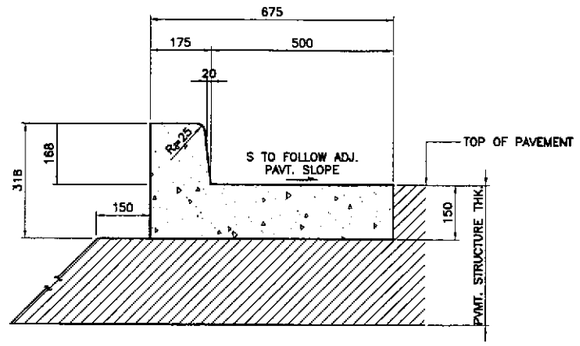

2b RS-05 TYPE "B"

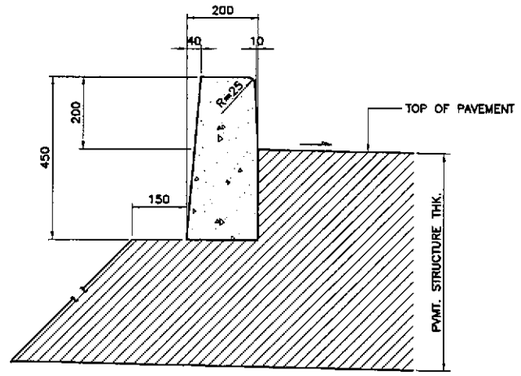

4a RS-05 TYPE "A"

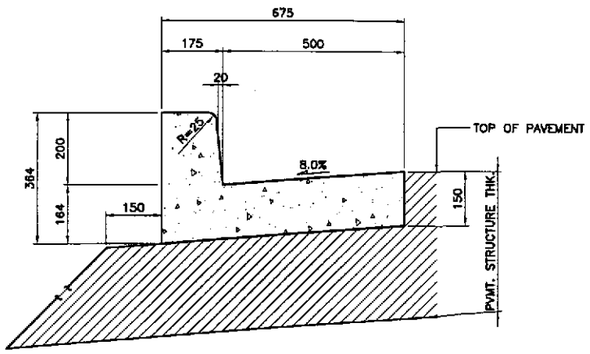

1a RS-05 TYPE "A"

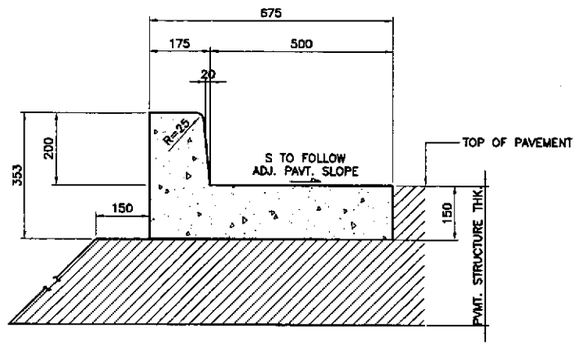

2a RS-05 TYPE "A"

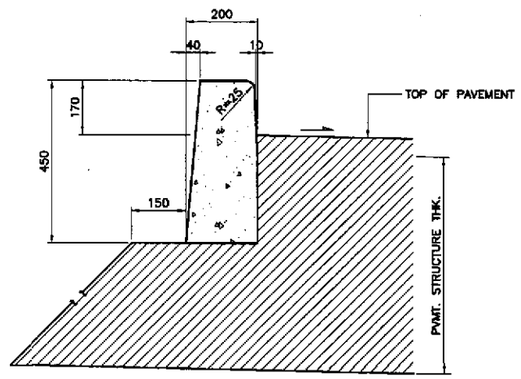

4b RS-05 TYPE "B"

1 RS-05 COMBINATION CONCRETE CURB AND GUTTER
NOT TO SCALE

2 RS-05 COMBINATION CONCRETE CURB AND SIDE STRIP
NOT TO SCALE

4 RS-05 CONCRETE CURB
NOT TO SCALE

JICA
JAPAN INTERNATIONAL COOPERATION AGENCY
KEI KATAHIRA & ENGINEERS INTERNATIONAL
YEC YACHIYO ENGINEERING CO., LTD.

	DATE	SIGNATURE
DESIGNED	9/21/02	A. ACACIO
CHECKED	9/23/02	S. GOSE
SUBMITTED	10/14/02	M. BONDOC, TEAM LEADER

REPUBLIC OF THE PHILIPPINES
DEPARTMENT OF PUBLIC WORKS AND HIGHWAYS

PJHL – PMO	BUREAU OF DESIGN		OFFICE OF THE SECRETARY	
Submitted By:	Reviewed By:	Recommended By:	Recommended By: (See cover sheet for Signature)	Approved By: (See cover sheet for Signature/Approval)
DANILO C. TRAJANO	JOSEFINA M. ALAGAR	GILBERTO S. REYES	MANUEL M. BONOAN	SIMEON A. DATUMANONG
Project Director	Chief, Highways Division	OIC, Director IV	Undersecretary	Secretary

PROJECT AND LOCATION :
THE DETAILED DESIGN STUDY ON UPGRADING INTER-URBAN HIGHWAY SYSTEM ALONG THE PAN-PHILIPPINE HIGHWAY (Plaridel, Cabanatuan and San Jose Bypasses)
PLARIDEL BYPASS - CONTRACT PACKAGE III

SCALE : NOT TO SCALE
FULL SIZE A1

SHEET CONTENTS : CONCRETE CURB AND GUTTER DETAILS

SHEET NO. : RS-05

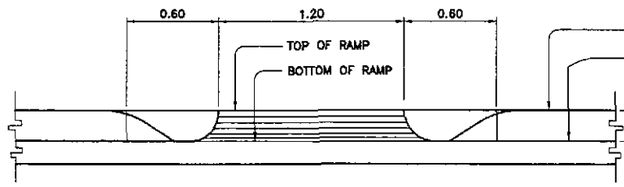

A2 RS-06 ELEVATION
SCALE 1:20

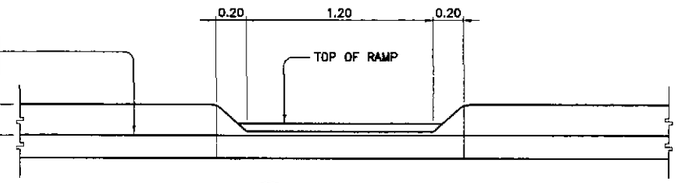

B2 RS-06 ELEVATION
SCALE 1:20

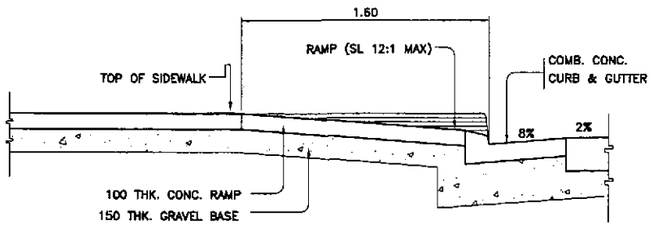

A1 RS-06 SECTION
SCALE 1:20

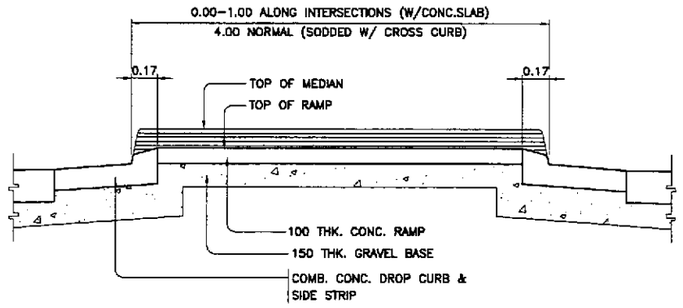

B1 RS-06 SECTION
SCALE 1:20

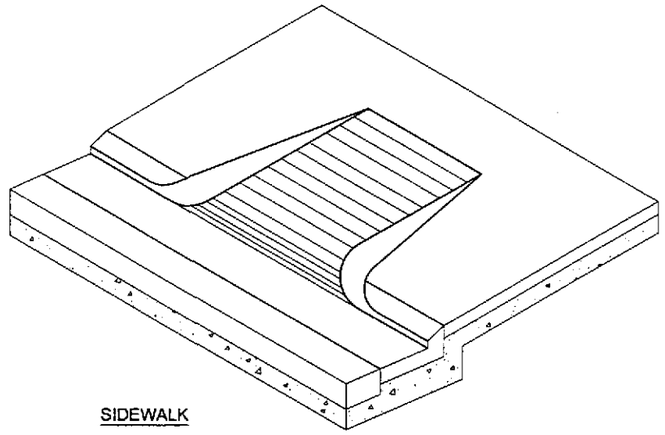

SIDEWALK

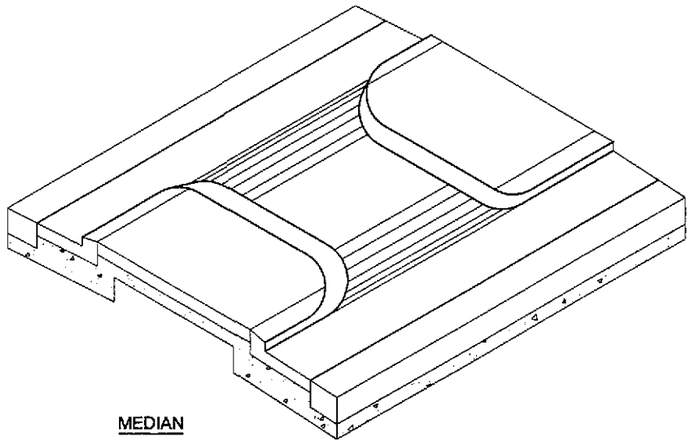

MEDIAN

C RS-06 ISOMETRIC VIEW
NOT TO SCALE

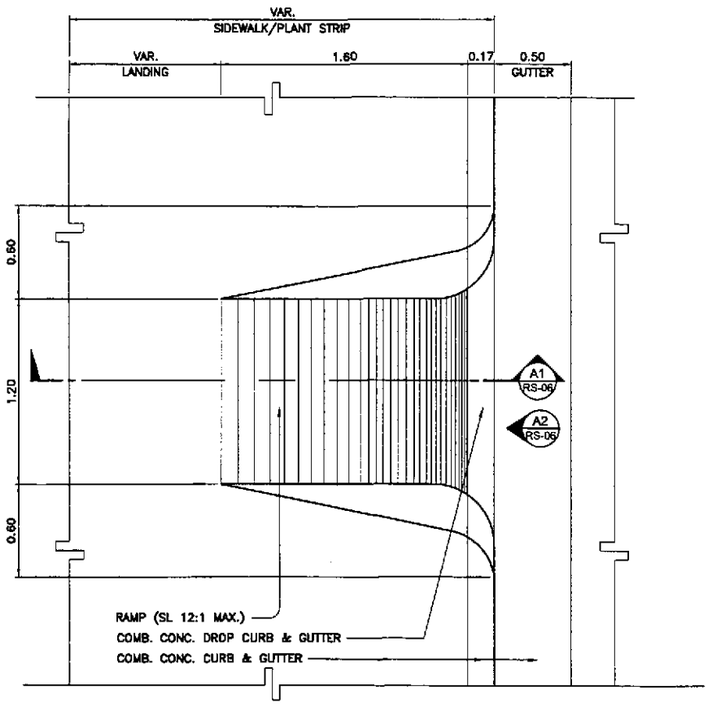

SIDEWALK

A RS-06 PLAN
SCALE 1:20

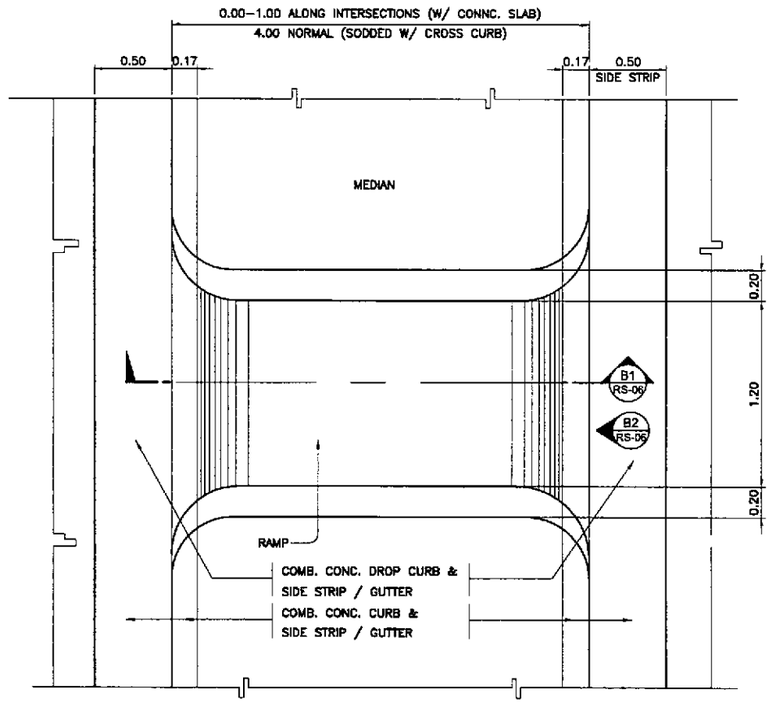

MEDIAN

B RS-06 PLAN
SCALE 1:20

1 RS-06 CURB-CUT RAMP DETAILS
SCALE AS SHOWN

JICA
JAPAN INTERNATIONAL COOPERATION AGENCY
KEI KATAHIRA & ENGINEERS INTERNATIONAL
YEC YACHIYO ENGINEERING CO., LTD.

	DATE	SIGNATURE
DESIGNED	9/21/02	A. ACACIO
CHECKED	9/24/02	S. JOSE
SUBMITTED	10/14/02	M. KAWAI TEAM LEADER

REPUBLIC OF THE PHILIPPINES
DEPARTMENT OF PUBLIC WORKS AND HIGHWAYS

PJHL – PMO	BUREAU OF DESIGN		OFFICE OF THE SECRETARY	
Submitted By:	Reviewed By:	Recommended By:	Recommended By: (See cover sheet for Signature)	Approved By: (See cover sheet for Signature/Approval)
DANILO C. TRAJANO	JOSEFINA M. ALAGAR	GILBERTO S. REYES	MANUEL M. BONGAN	SIMEON A. DATUMANONG
Project Director	Chief, Highways Division	DIC, Director IV	Undersecretary	Secretary

PROJECT AND LOCATION :
THE DETAILED DESIGN STUDY ON UPGRADING INTER-URBAN HIGHWAY SYSTEM ALONG THE PAN-PHILIPPINE HIGHWAY (Plaridel, Cabanatuan and San Jose Bypasses)
PLARIDEL BYPASS - CONTRACT PACKAGE III

SCALE : AS SHOWN
FULL SIZE A1

SHEET CONTENTS :
CURB-CUT RAMP DETAILS
(FOR THE PHYSICALLY HANDICAPPED)

SHEET NO. : RS-06

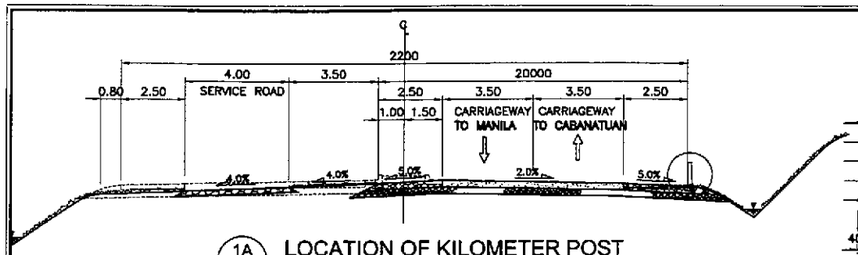

1A RS-07 LOCATION OF KILOMETER POST
SCALE 1:200

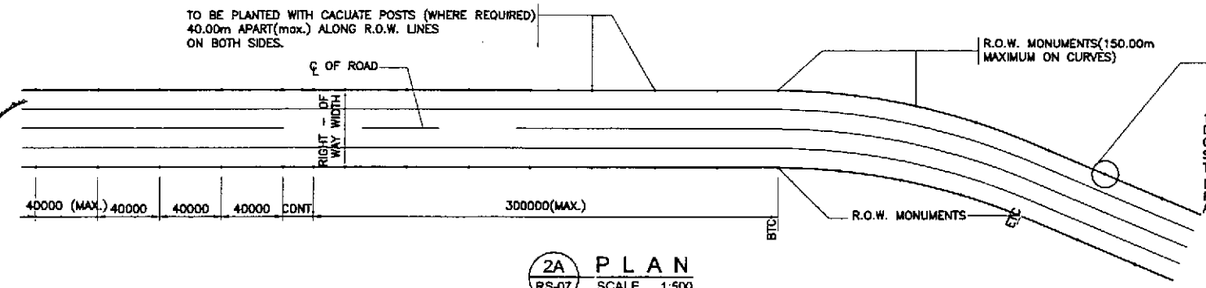

2A RS-07 PLAN
SCALE 1:500

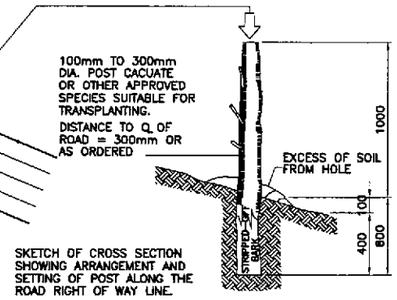

SKETCH OF CROSS SECTION SHOWING ARRANGEMENT AND SETTING OF POST ALONG THE ROAD RIGHT OF WAY LINE.

SECTION THRU STEM OF ENGRAVED FIGURES (ACTUAL SIZE)

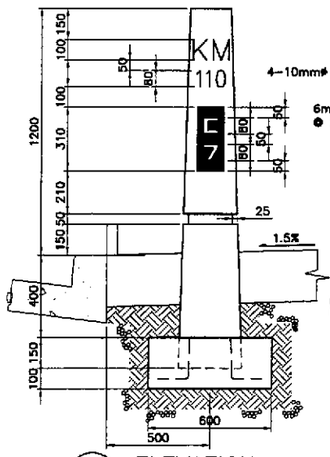

1B RS-07 ELEVATION
SCALE 1:15

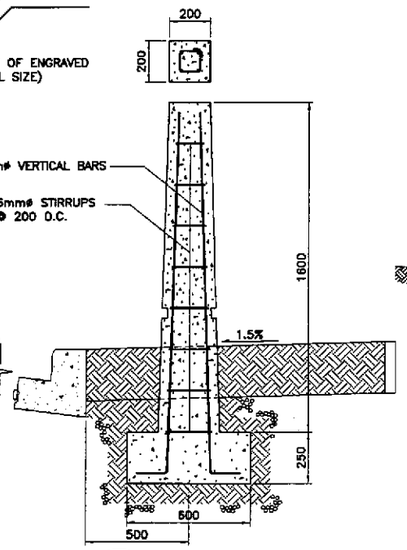

1D RS-07 SECTION
SCALE 1:15

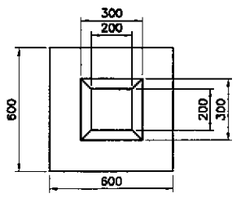

1C RS-07 PLAN
SCALE 1:15

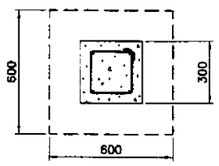

1E RS-07 SECTION
SCALE 1:15

NOTES:

1. CONCRETE MIXTURE TO BE USED SHOULD BE CLASS "A" MIX (1:2:3). ALL CONCRETE SHOULD BE PLAIN CEMENT FINISHED, PAINTED WITH WHITE REFLECTORIZED WHILE LETTERINGS AND NUMERALS SHOULD BE CHROME YELLOW REFLECTORIZED PAINT. BE V-CUT (SEE SECTION DRAWING) POST.
2. ALL DIMENSIONS ARE ALL IN MILLIMETERS UNLESS OTHERWISE STATED.

CONDITIONS :

1. WHERE THE SHOULDER IS LESS THAN 1.00 TO 2.50 METERS, KILOMETER POST SHALL BE LOCATED AS FAR AS PRACTICABLE BUT NOT LESS THAN 0.50 METER AWAY FROM THE GUTTER THAT CLEAR VISIBILITY WITHIN 25.00 TO 50.00 METERS IS FACILITATED.
2. ALL KM. POST TO BE PLACED ON THE RIGHT HAND SIDE OF THE ROAD.

1 RS-07 KILOMETER POST
SCALE AS SHOWN

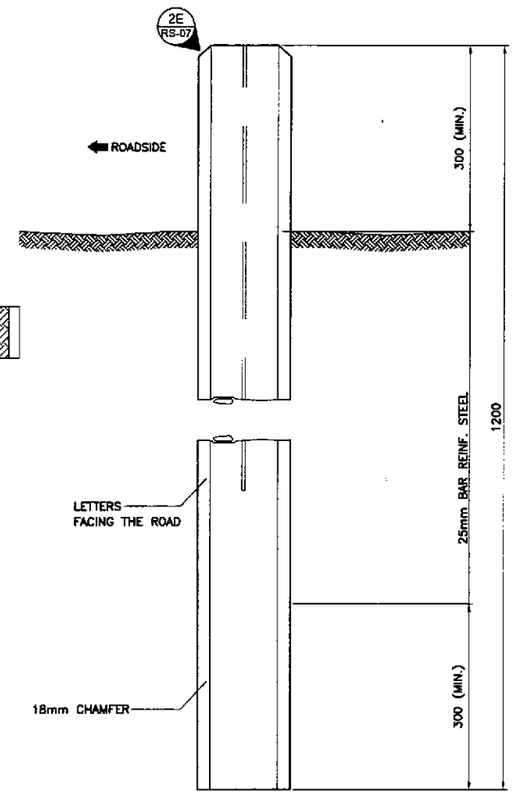

2B RS-07 SIDE ELEVATION
SCALE 1:5

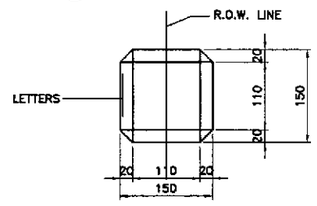

2C RS-07 PLAN
SCALE 1:5

GENERAL NOTES

1. CONCRETE MONUMENTS SHALL BE PLACED OPPOSITE ALL P.I., B.T.C., E.T.C., 150.00m (MAX.) INTERVAL ON FLAT CURVES AND 300.00mm (MAX.) INTERVAL ON TANGENTIAL ALIGNMENTS ALONG THE RIGHT OF WAY LINE.
2. RIGHT-OF-WAY MONUMENTS SHALL BE SET ALONG THE RIGHT OF WAY LINES WITH THE LETTERED FACE, FACING THE CENTERLINE OF THE ROAD.
3. THE LETTERS SHALL BE 0.005m DEEP FROM FACE OF CONCRETE, INDENTED.
4. PHIL. CACUATE OR APPROVED SPECIES SUITABLE TO MAKE ROOTS UPON PLANTING OF 0.10m TO 0.30m DIA. SHALL BE PLANTED OPPOSITE EACH OTHER ALONG THE RIGHT OF WAY LINES TO A MAXIMUM DISTANCE OF 40.00m FROM POST TO POST CONSIDERING ALSO THE CONCRETE MONUMENTS EXPENSES SHALL BE CHARGED ALSO AGAINST CONSTRUCTION ENGINEERING.

NOTE :

ALL CONCRETE TO BE CLASS "A".

CONSTRUCTION NOTES :

ACTUAL LOCATIONS OF RIGHT-OF-WAY MONUMENTS SHALL BE ADJUSTED AS DETERMINED BY THE ENGINEER.

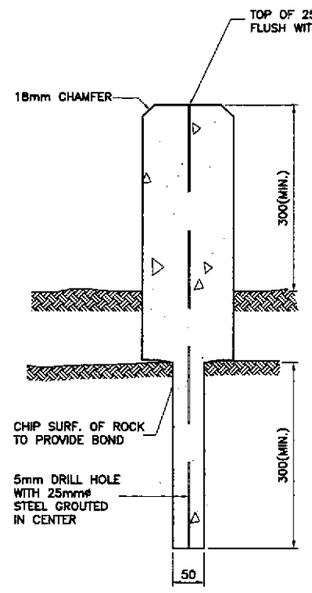

2D RS-07 SECTION
SCALE 1:5

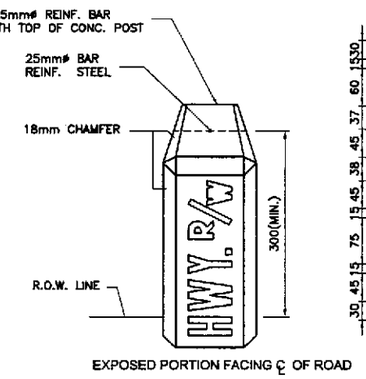

2E RS-07 ELEVATION
SCALE 1:5

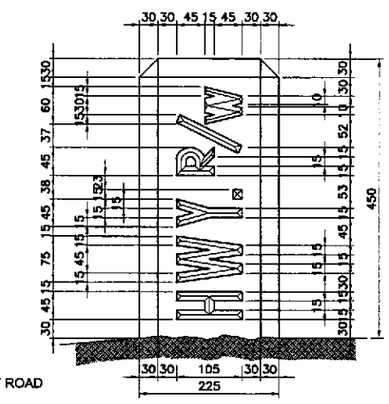

2G RS-07 DETAIL OF LETTERS
SCALE 1:5

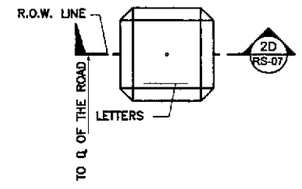

2F RS-07 PLAN
SCALE 1:5

2 RS-07 RIGHT OF WAY MARKER
SCALE AS SHOWN

	DATE	SIGNATURE
DESIGNED	9/21/02	A. ACACIO
CHECKED	9/23/02	S. JOSE
SUBMITTED	10/14/02	TEAM LEADER

JICA
JAPAN INTERNATIONAL COOPERATION AGENCY
KEI KATAHIRA & ENGINEERS INTERNATIONAL
YEO YACHIYO ENGINEERING CO., LTD.

REPUBLIC OF THE PHILIPPINES
DEPARTMENT OF PUBLIC WORKS AND HIGHWAYS

PJHL - PMO	BUREAU OF DESIGN		OFFICE OF THE SECRETARY	
Submitted By:	Reviewed By:	Recommended By:	Recommended By: (See cover sheet for Signature)	Approved By: (See cover sheet for Signature/Approval)
DANILO C. TRAJANO, Project Director	JOSEFINA M. ALAGAR, Chief, Highways Division	GILBERTO S. REYES, OIC, Director IV	MANUEL M. BONOAN, Undersecretary	SIMEON A. DATUMANONG, Secretary

PROJECT AND LOCATION :
THE DETAILED DESIGN STUDY ON UPGRADING INTER-URBAN HIGHWAY SYSTEM ALONG THE PAN-PHILIPPINE HIGHWAY (Plaridel, Cabanatuan and San Jose Bypasses)
PLARIDEL BYPASS - CONTRACT PACKAGE III

SCALE : AS SHOWN
FULL SIZE A1

SHEET CONTENTS :
STANDARD KILOMETER POST AND RIGHT OF WAY MARKERS

SHEET NO. : RS-07

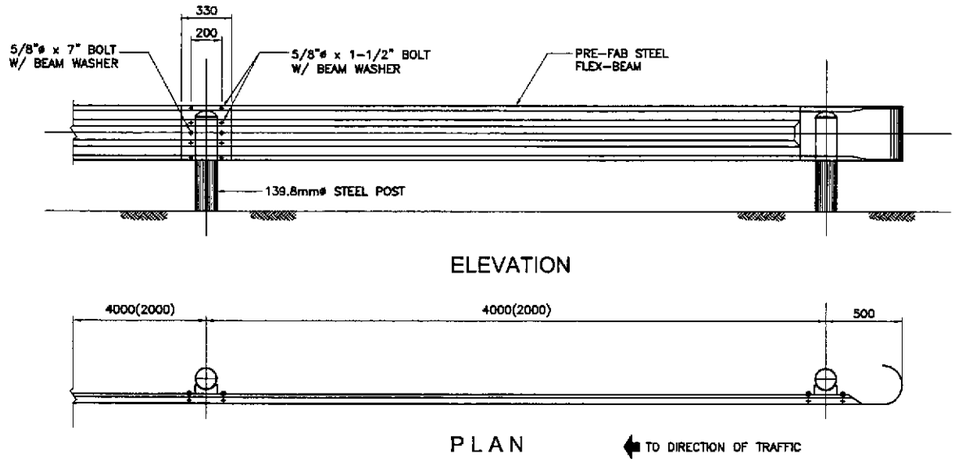

1 RS-08 GUARDRAIL DETAIL
SCALE 1:20

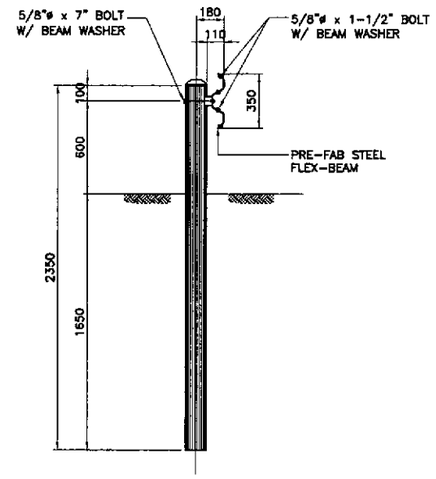

SECTION

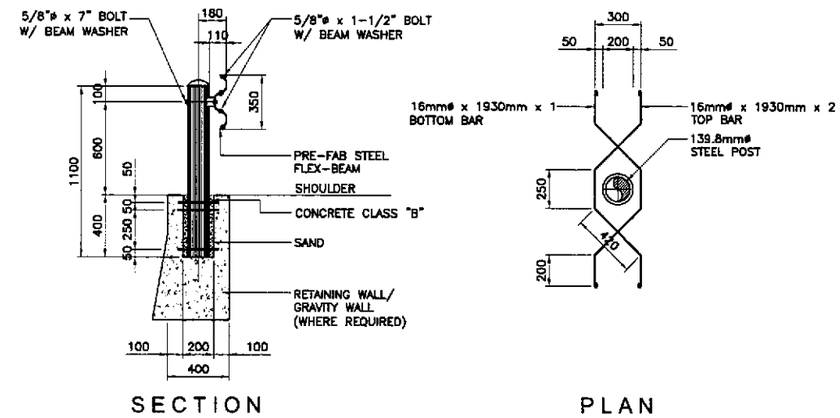

2 RS-08 STEEL POST DETAIL
SCALE 1:20

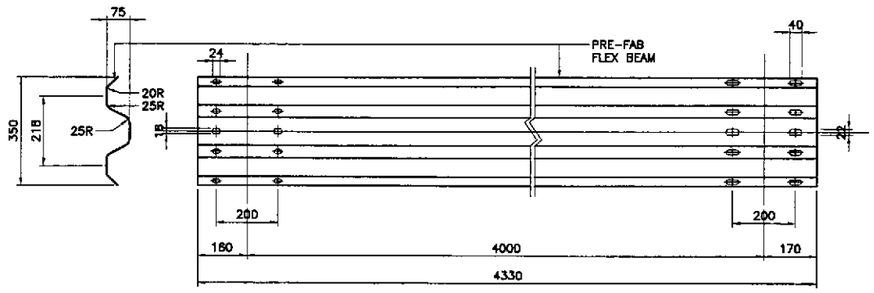

3 RS-08 BEAM TYPE GUARDRAIL (TYPE "GR-A")
SCALE 1:10

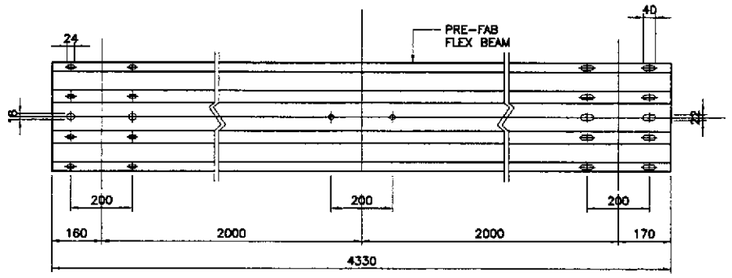

4 RS-08 BEAM TYPE GUARDRAIL ON RETAINING WALL (TYPE "GR-B")
SCALE 1:10

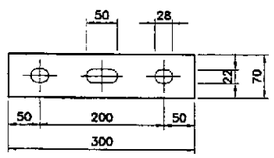

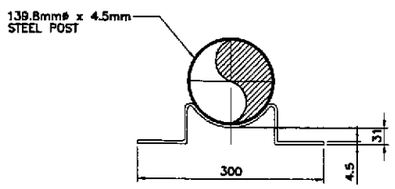

5 RS-08 BRACKET DETAIL
SCALE 1:5

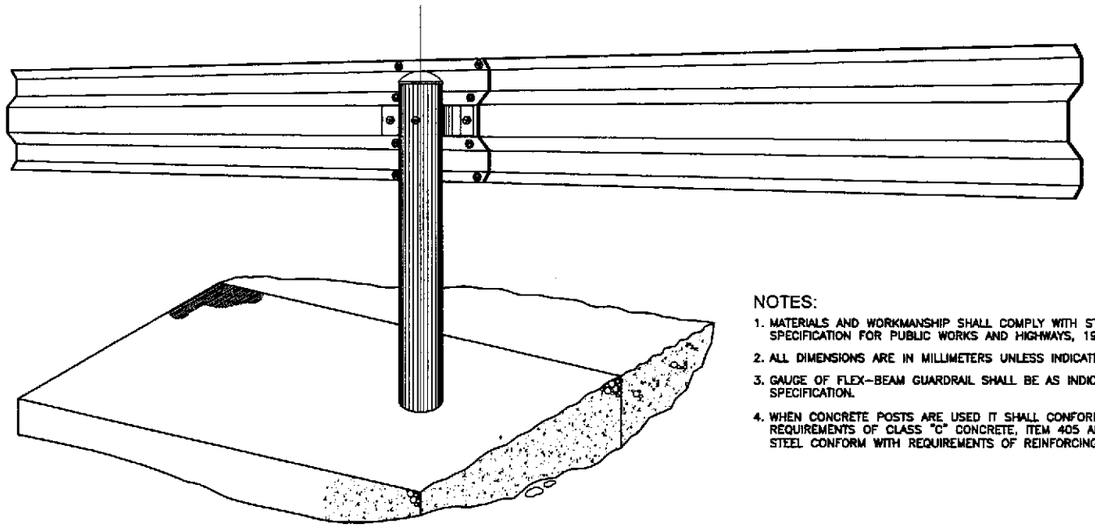

PERSPECTIVE

NOTES:

1. MATERIALS AND WORKMANSHIP SHALL COMPLY WITH STANDARD SPECIFICATION FOR PUBLIC WORKS AND HIGHWAYS, 1995 EDITION.
2. ALL DIMENSIONS ARE IN MILLIMETERS UNLESS INDICATED OTHERWISE.
3. GAUGE OF FLEX-BEAM GUARDRAIL SHALL BE AS INDICATED IN SPECIFICATION.
4. WHEN CONCRETE POSTS ARE USED IT SHALL CONFORM WITH THE REQUIREMENTS OF CLASS "C" CONCRETE, ITEM 405 AND REINFORCING STEEL CONFORM WITH REQUIREMENTS OF REINFORCING STEEL, ITEM 404.

JICA
JAPAN INTERNATIONAL COOPERATION AGENCY
KEI KATAHIRA & ENGINEERS INTERNATIONAL
YEC YACHIYO ENGINEERING CO., LTD.

	DATE	SIGNATURE
DESIGNED	9/21/02	A. ADEBO
CHECKED	9/23/02	S. GOSE
SUBMITTED	10/14/02	TEAM LEADER

REPUBLIC OF THE PHILIPPINES
DEPARTMENT OF PUBLIC WORKS AND HIGHWAYS

PJHL – PMO	BUREAU OF DESIGN		OFFICE OF THE SECRETARY	
Submitted By:	Reviewed By:	Recommended By:	Recommended By: (See cover sheet for Signature)	Approved By: (See cover sheet for Signature/Approval)
DANILO C. TRAJANO	JOSEFINA M. ALAGAR	GILBERTO S. REYES	MANUEL M. BONOAN	SIMEON A. DATUMANONG
Project Director	Chief, Highways Division	OIC, Director IV	Undersecretary	Secretary

PROJECT AND LOCATION :
THE DETAILED DESIGN STUDY ON UPGRADING INTER-URBAN HIGHWAY SYSTEM ALONG THE PAN-PHILIPPINE HIGHWAY (Plaridel, Cabanatuan and San Jose Bypasses)
PLARIDEL BYPASS - CONTRACT PACKAGE III

SCALE : AS SHOWN
FULL SIZE A1

SHEET CONTENTS :
STANDARD STEEL BEAM GUARDRAIL (TYPE GR-A & GR-B)

SHEET NO. : RS-08

NOTE :

DRAIN OR WEEP HOLES SHALL BE PROVIDED IN SLOPE EMBANKMENT AT LOCATIONS SHOWN ON THE PLANS. GRAVEL BACKING NOT LESS THAN 0.057 CUBIC METER SHALL BE PROVIDED AT EACH DRAIN OR WEEP HOLES TO INSURE PROPER OPERATION OF THE DRAIN. ROCK BACKING SHALL EXTEND TO AT LEAST ONE (1) FOOT ABOVE THE DRAIN OR WEEP HOLES.

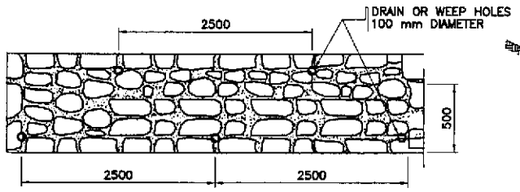

2A RS-09 ELEVATION OF GROUTED RIP-RAP
NOT TO SCALE

NOTE :

WHERE COMMON BORROW CONSIST OF CLAY OR OTHER IMPERVIOUS MATERIALS, SHOULDER DRAINS SHALL BE INSTALLED 20.00 M. APART ON EACH SHOULDER AND ARRANGED IN SUCH A WAY THAT THE DRAINS ON EACH SHOULDERS ARE STAGGERED AND NOT EXACTLY OPPOSITE EACH OTHER. THEY SHOULD BE CONSTRUCTED AT LOWEST POINT OF SAG VERTICALS ON BOTH SHOULDERS.

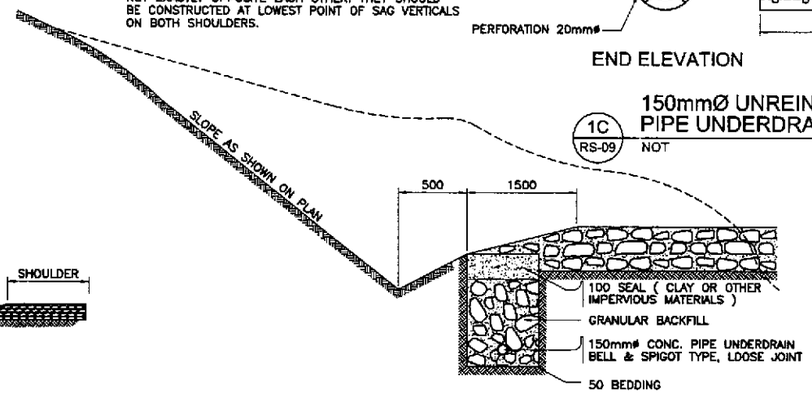

C RS-09 DETAIL OF UNDERDRAIN
NOT TO SCALE

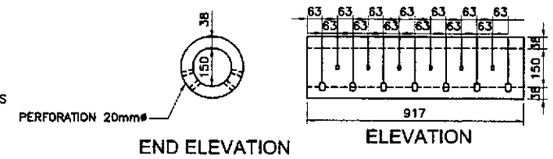

1C RS-09 150mmØ UNREINFORCED CONCRETE PIPE UNDERDRAIN
NOT TO SCALE

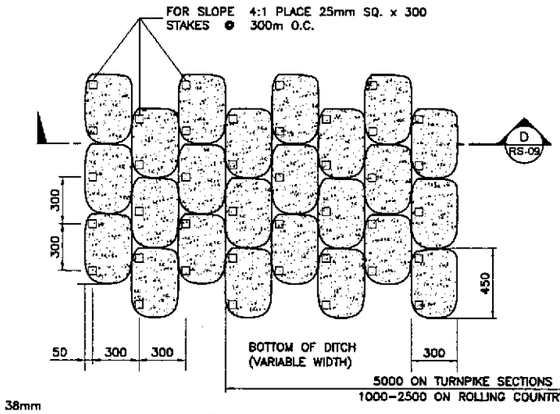

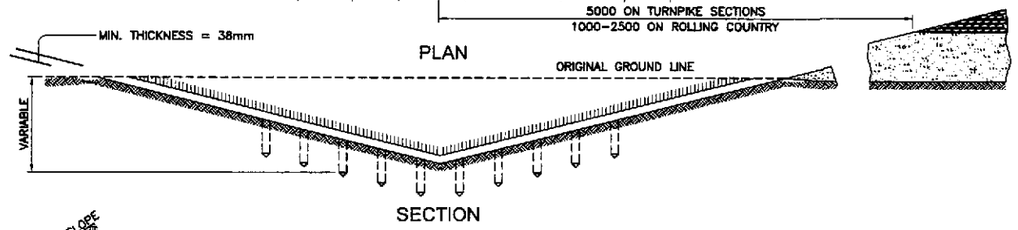

D RS-09 DETAIL OF SODDING
NOT TO SCALE

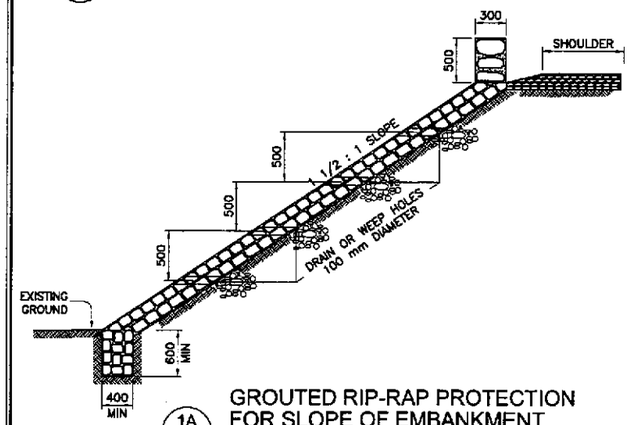

1A RS-09 GROUTED RIP-RAP PROTECTION FOR SLOPE OF EMBANKMENT
NOT TO SCALE

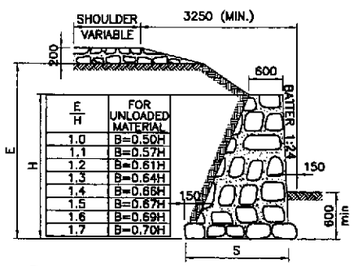

F/H	FOR UNLOADED MATERIAL
1.0	B=0.50H
1.1	B=0.57H
1.2	B=0.61H
1.3	B=0.64H
1.4	B=0.66H
1.5	B=0.67H
1.6	B=0.69H
1.7	B=0.70H

1B RS-09 RUBBLE MASONRY RETAINING WALL
NOT TO SCALE

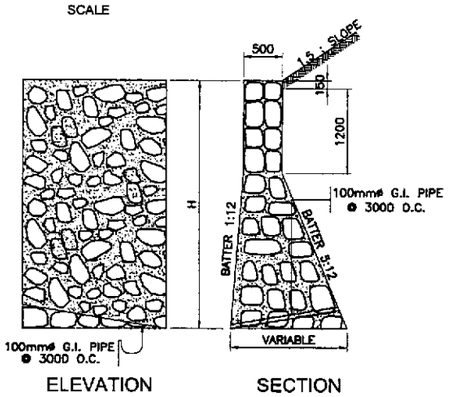

3B RS-09 STONE MASONRY RETAINING WALL
NOT TO SCALE

NOTE :

EMBANKMENT WILL BE CONSTRUCTED ONLY ON A FOUNDATION BED SATISFACTORY TO THE ENGINEER. THE STONES SHALL NOT BE LESS THAN 0.15 CU.M. IN VOLUME WITH 75% OF STONES AT LEAST 0.03 CU.M. IN VOLUME AND LAID OFF TO THE LINES AND DIMENSIONS REQUIRED. THE STONES SHALL BE BONDED TO SAME EXTENT AND SECURELY BEDDED. SPALLS SHALL BE USED TO FILL VOIDS. ANY SPACE BACK TO HAND-LAID ROCK EMBANKMENT SHALL BE FILLED ENTIRELY WITH COMPACTED MATERIAL.

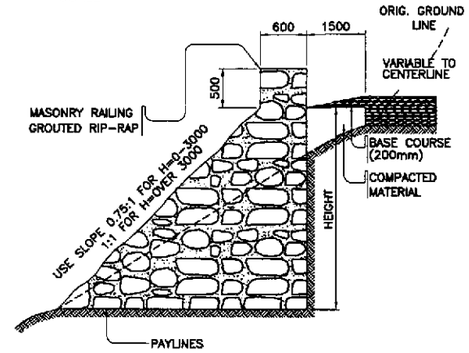

5B RS-09 HAND LAID ROCK EMBANKMENT
NOT TO SCALE

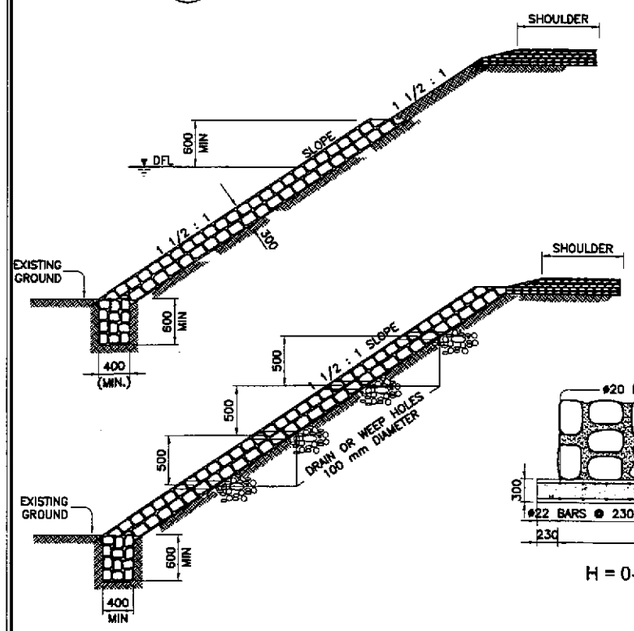

HEIGHT " H " IN METER	QUANTITIES PER LINEAR METER OF WALL	
	CONCRETE CU. M.	STEEL KILOS
3.00	0.153	19
3.60	0.230	30
4.80	0.306	40
6.00	0.383	45

A RS-09 EMBANKMENT PROTECTION WALLS
NOT TO SCALE

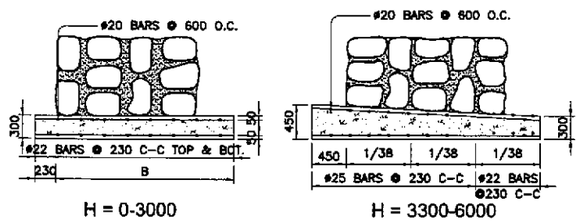

2B RS-09 FOOTING FOR WALL
NOT TO SCALE

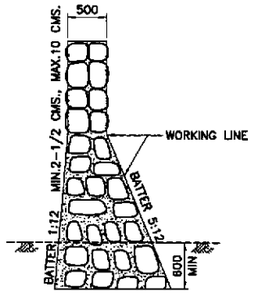

SECTION SHOWING WORKING LINES FOR BULDGE AND PAYMENTS

TABLE

HEIGHT IN METERS	QUANTITIES PER LINEAR M OF WALL IN CU. METER
0.90	0.15
1.20	0.23
1.50	0.31
1.90	0.38
2.10	0.46
2.40	0.54
2.70	0.69
3.00	0.77
3.30	0.92

TABLE

HEIGHT IN METERS	QUANTITIES PER LINEAR M OF WALL IN CU. METER
3.60	1.15
3.90	1.30
4.20	1.45
4.50	1.68
4.80	1.91
5.10	2.14
5.40	2.37
5.60	2.68
6.00	2.91

MIN. BULDGE 2.50 CMS., MAX. BULDGE 10 CMS. FEATHERED TO WORKING LINE AT JOINTS TO BE RAKED TO A DEPTH OF 2.50 TO 5 CMS.

B RS-09 MASONRY RETAINING WALLS
NOT TO SCALE

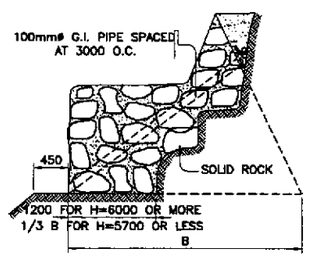

4B RS-09 METHOD OF STEPING FOOTING
NOT TO SCALE

NOTE :

CONCRETE CLASS "A" FOOTING FOR WALL WHEN ORDERED BY THE ENGINEER.
DEPTH OF FOOTING : FOOTING SHALL BE CARRIED DOWN TO A FIRM FOUNDATION AS DIRECTED BY THE ENGINEER.
MORTAR : TO BE ONE (1) PART CEMENT AND THREE (3) PARTS SAND.
MORTAR : JOINTS WITH GENERALLY 2.50 TO 4 CMS., MIN. 2 CMS., MAX. 6.50 CMS.
BULDGE : THE BULDGE OF INDIVIDUAL STONES SHALL VARY BETWEEN 2.50 TO 10 CMS.
SURFACE FINISH : TO BE FREE OF TOOL OR DRILL MARKS.

PAYMENT FOR POROUS TILE DRAIN WITH ROCK BACKFILL AND FOR 150mmø & GALVANIZED IRON PIPES WITH ROCK BACKING PAYMENT WILL NOT BE MADE DIRECT,BUT WILL BE INCLUDED AS PART OF THE PRICE BID FOR MASONRY QUANTITY TO BE PAID FOR SHALL BE WITHIN THE WORKING LINES AS SHOWN IN SECTIONS. ALL WALL MASONRY SHALL BE "STONE MASONRY" ITEM 505 OF GOVERNMENT STANDARD SPECIFICATIONS FOR HIGHWAYS AND BRIDGES.

JICA
JAPAN INTERNATIONAL COOPERATION AGENCY
KEI KATAHIRA & ENGINEERS INTERNATIONAL
YEC YACHIYO ENGINEERING CO., LTD.

	DATE	SIGNATURE
DESIGNED	7/21/02	A. ACACIO
CHECKED	9/23/02	S. DOSE
SUBMITTED	10/14/02	TEAM LEADER

REPUBLIC OF THE PHILIPPINES
DEPARTMENT OF PUBLIC WORKS AND HIGHWAYS

PUHL – PMO	BUREAU OF DESIGN		OFFICE OF THE SECRETARY	
Submitted By:	Reviewed By:	Recommended By:	Recommended By: (See cover sheet for Signature)	Approved By: (See cover sheet for Signature/Approval)
DANILO C. TRAJANO	JOSEFINA M. ALAGAR	GILBERTO S. REYES	MANUEL M. BONDAN	SIMEON A. DATUMANONG
Project Director	Chief, Highways Division	DIC, Director IV	Undersecretary	Secretary

PROJECT AND LOCATION :	SCALE :	SHEET CONTENTS :	SHEET NO. :
THE DETAILED DESIGN STUDY ON UPGRADING INTER-URBAN HIGHWAY SYSTEM ALONG THE PAN-PHILIPPINE HIGHWAY (Plaridel, Cabanatuan and San Jose Bypasses) PLARIDEL BYPASS - CONTRACT PACKAGE III	AS SHOWN FULL SIZE A1	EMBANKMENT PROTECTION WALLS AND MASONRY RETAINING WALLS	RS-09

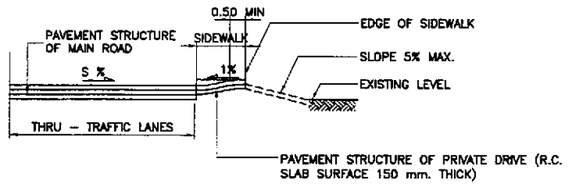

4 RS-10 TYPICAL PRIVATE DRIVEWAY AT SIDE WALK (PROFILE)
NOT TO SCALE

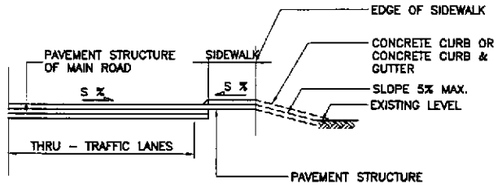

5 RS-10 TYPICAL SIDE ROAD AT SIDE WALK (PROFILE)
NOT TO SCALE

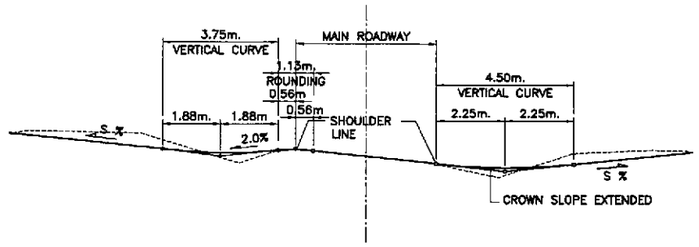

6C RS-10 SUPERELEVATED CUT SECTION
NOT TO SCALE

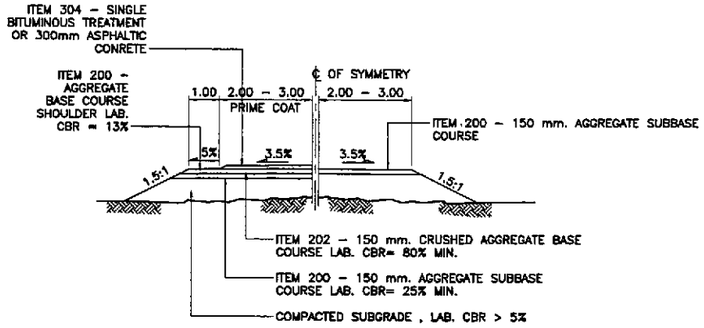

FOR ASPHALTIC SURFACE FOR GRAVEL SURFACE

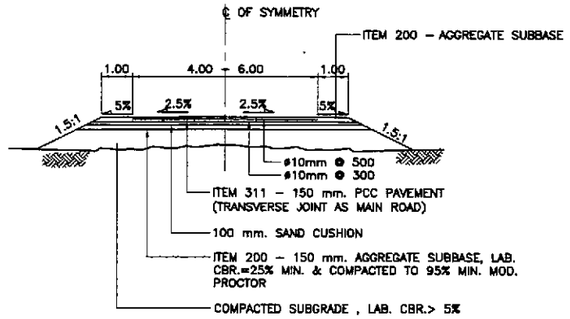

FOR R.C. CONCRETE PAVEMENT
FOR PRIVATE DRIVEWAY

3 RS-10 TYPICAL CROSS - SECTION
NOT TO SCALE

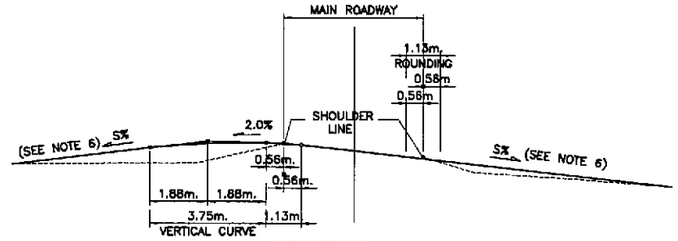

ROUNDING

6B RS-10 SUPERELEVATED FILL SECTION
NOT TO SCALE

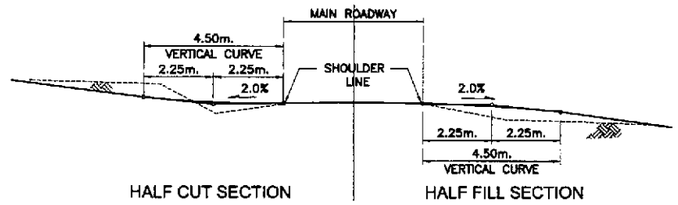

HALF CUT SECTION HALF FILL SECTION

6A RS-10 STANDARD CROWNED SECTION
NOT TO SCALE

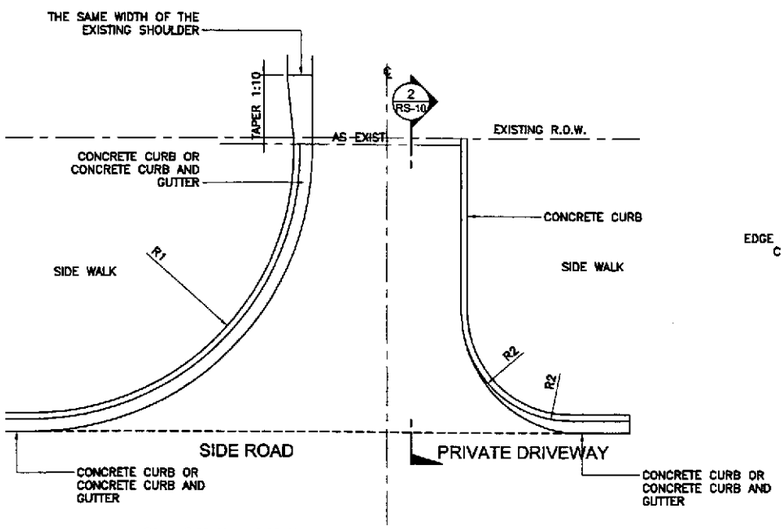

R1 = 5.00 M. – 9.00 M. ACCORDING TO TRAFFIC VOLUME AND AVAILABLE SPACE
R2 = 2.50 M. – 3.50 M. OR AS INDICATED IN THE PLAN & PROFILE DRAWING

1 RS-10 PLAN OF SIDE ROAD & PRIVATE DRIVEWAY AT SIDE WALK
NOT TO SCALE

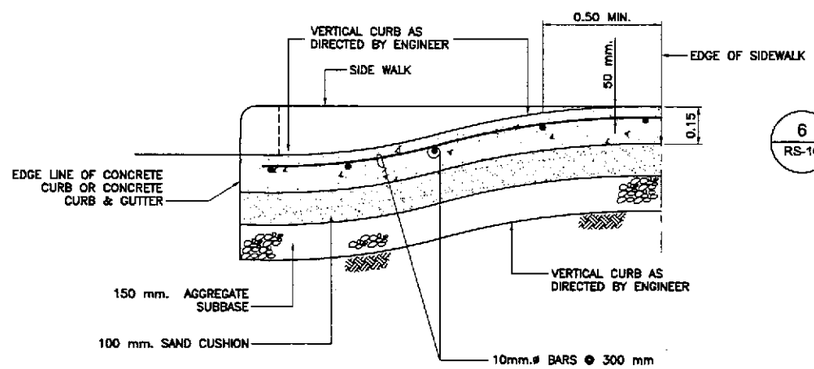

2 RS-10 SECTION OF R.C. CONCRETE PAVEMENT OF SIDE ROAD & PRIVATE DRIVEWAY
NOT TO SCALE

6 RS-10 VERTICAL ALIGNMENT OF ACCESS ROAD APPROACHES TO MINOR INTERSECTION
NOT TO SCALE

NOTES:

1. THE ENGINEER SHALL DIRECT THE LISTING OF CONNECTION SIDE ROAD/ PRIVATE DRIVEWAY APPROACHES, THE ARRANGEMENT OF THE DRAINAGE STRUCTURES (IF ANY), THE LIMIT OF WORK FOR THE CONNECTION ROADS AND THE TYPE AND QUANTITIES OF PAVEMENT STRUCTURE.
2. THE WORD "SIDE ROAD" IN THIS DRAWING REFER TO THE ROAD CONNECTING TO THE HIGHWAY SIDE ROAD LEADS TO THE BARANGAY, PUBLIC PLACE ETC., WHILE "PRIVATE DRIVEWAY" IS THE PRIVATE CONNECTION ROAD FOR PRIVATE HOUSE.
3. SIDE ROAD (PUBLIC) APPROACHES AND PRIVATE DRIVEWAY TO BUILDINGS OR RESIDENCE SHALL BE PAVED 1.5 m OUT FROM EDGE OF SHOULDER OR TO THE RIGHT-OF-WAY LINE, WHICHEVER IS LESS. PAVEMENT THICKNESSES SHALL BE AS SHOWN ON THE PLANS.
4. USE 4:1 OF FLATTER SIDE SLOPE IN THE APPROACH RADII AREA.
5. THE SIDE SLOPES IN THE MAIN ROADWAY AND THE APPROACH ROADWAY IF STEEPER THE 4:1 SHALL BE SMOOTHLY TRANSITIONED INTO THE 4:1 AREA.
6. SIDE CROSS DRAINS SHALL BE LOCATED 10.00m OR AS SHOWN IN THE PLAN.
7. 15m. RADII TO BE USED ON INTERSECTION ROADS, EXCEPT RESIDENTIAL DRIVES, UNLESS OTHERWISE SPECIFIED ON PLANS.
8. RADII MAY BE VARIED TO SUIT FIELD CONDITIONS.
9. TANGENT SLOPE NOT STEEPER THAN 10% BEYOND VERTICAL CURVE, THE SLOPE MAY BE STEEPER, IF REQUIRED, TO MEET EXISTING APPROACH SLOPE.
10. UNLESS OTHERWISE SPECIFIED, ALL DIMENSIONS ARE IN METERS.

JICA
JAPAN INTERNATIONAL COOPERATION AGENCY
KEI KATAHIRA & ENGINEERS INTERNATIONAL
YEC YACHIYO ENGINEERING CO., LTD.

	DATE	SIGNATURE
DESIGNED	9/23/02	A. ACACIO
CHECKED	9/23/02	S. BOSE
SUBMITTED	10/14/02	TEAM LEADER

REPUBLIC OF THE PHILIPPINES
DEPARTMENT OF PUBLIC WORKS AND HIGHWAYS

PJHL – PMO	BUREAU OF DESIGN		OFFICE OF THE SECRETARY	
Submitted By:	Reviewed By:	Recommended By:	Recommended By: (See cover sheet for Signature)	Approved By: (See cover sheet for Signature/Approval)
DANILO C. TRAJANO	JOSEFINA M. ALAGAR	GILBERTO S. REYES	MANUEL M. BONDAN	SIMEON A. DATUMANONG
Project Director	Chief, Highways Division	OIC, Director IV	Undersecretary	Secretary

PROJECT AND LOCATION :	SCALE :	SHEET CONTENTS :	SHEET NO. :
THE DETAILED DESIGN STUDY ON UPGRADING INTER-URBAN HIGHWAY SYSTEM ALONG THE PAN-PHILIPPINE HIGHWAY (Plaridel, Cabanatuan and San Jose Bypasses)	NOT TO SCALE	SIDE ROAD APPROACHES AND PRIVATE DRIVEWAY ACCESS	RS-10
PLARIDEL BYPASS - CONTRACT PACKAGE III	FULL SIZE A1		

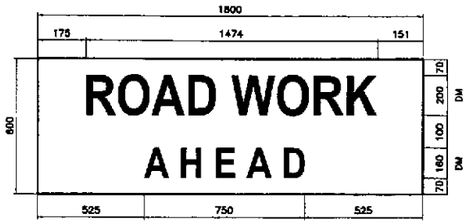

T1 - 1

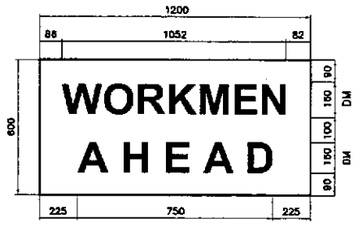

T1 - 5

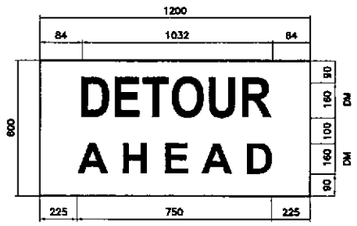

T1 - 6

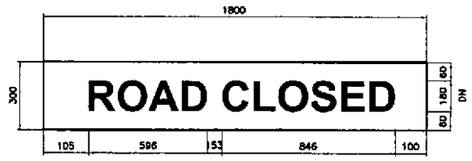

T2 - 2

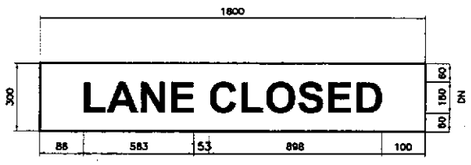

T2 - 4

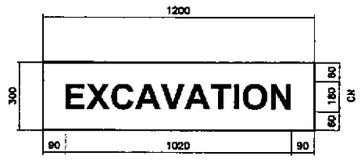

T2 - 6

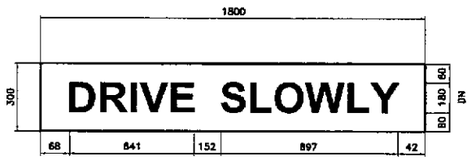

T2 - 7

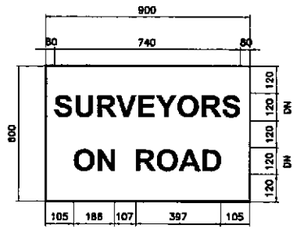

T2 - 8

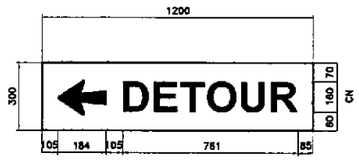

T4 - 1L

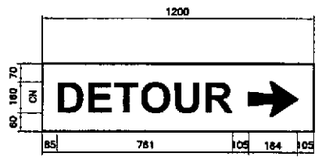

T4 - 1R

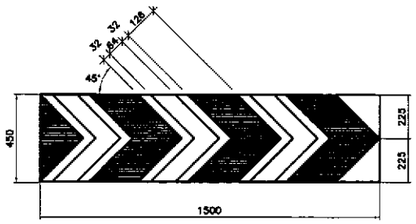

T4 - 2

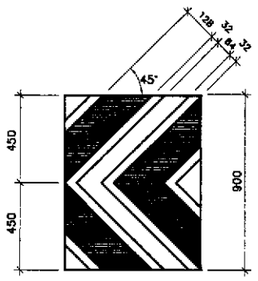

T4 - 3

NOTES :

1. BARRIER SHALL HAVE AN ALTERNATE DIAGONAL BLACK AND YELLOW STRIPES. THE YELLOW BANDS SHALL BE REFLECTORIZED.
2. BARRIER POINTS SHALL BE PRINTED YELLOW.
3. PROVISION SHALL BE MADE FOR THE HANDLING OF SIGNS BELOW THE BARRIER BARS.

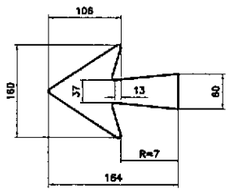

DETAIL OF ARROW

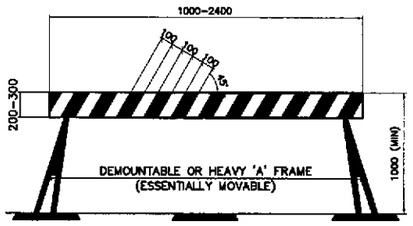

ROAD SIGNS, (LOCATION AND INSTALLATION)

BARRICADES (TYPE I, TYPE II, TYPE III) SHOULD CONFORM WITH SPECIFICATIONS MENTIONED IN PHILIPPINES. ROAD SHOWS MANUAL. (REVISED EDITION MPWH, TRAFFIC ENG'G. AND MANAGEMENT PROJECT SERIES OF 1962.

TYPE 1 BARRICADE

NOTES :

1. ADVANCE SIGNS (T1) AND POSITION SIGNS (T2) SHALL HAVE BLACK LETTERS ON YELLOW REFLECTORIZED BACKGROUND.
2. TRAFFIC DIVERSION SIGNS (T4–1) SHALL HAVE BLACK LETTERS AND ARROW ON YELLOW REFLECTORIZED BACKGROUND.
3. TRAFFIC DIVERSION SIGNS (T4–2) & (T4–3) SHALL HAVE WHITE CHEVRONS ON BLACK BACKGROUND. WHITE REFLECTIVE MATERIAL 64mm. WIDE TO BE CENTRALLY PLACED ON WHITE BANDS.

1 / RS-11 ROAD WORK SIGN DETAILS
NOT TO SCALE

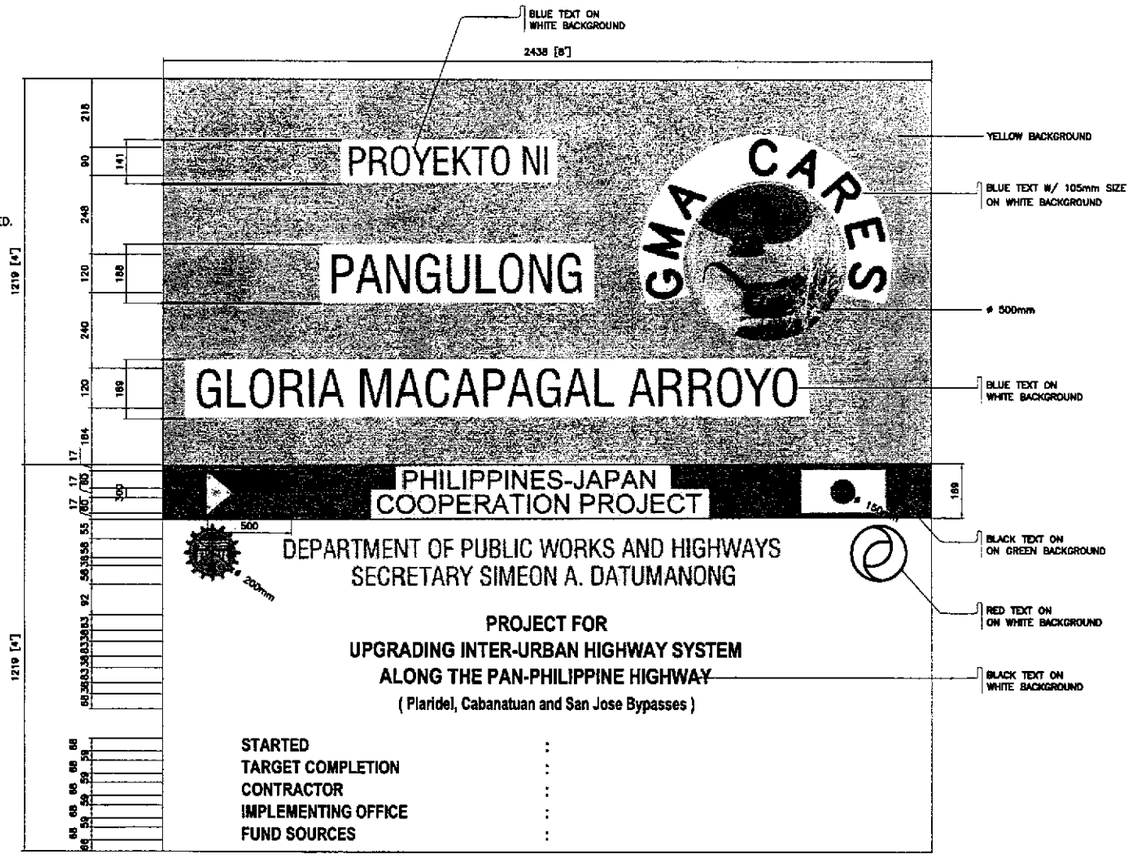

(Two(2) at every Contract Package)

2 / RS-11 PROJECT SIGN BOARD DETAILS
NOT TO SCALE

JICA JAPAN INTERNATIONAL COOPERATION AGENCY			
KEI KATAHIRA & ENGINEERS INTERNATIONAL / YEC YACHIYO ENGINEERING CO., LTD.			
	DATE	SIGNATURE	
DESIGNED	9/21/02	A. ACACIO	REPUBLIC OF THE PHILIPPINES DEPARTMENT OF PUBLIC WORKS AND HIGHWAYS
CHECKED	9/23/02	S. JOSE	PJHL – PMO / BUREAU OF DESIGN / OFFICE OF THE SECRETARY
SUBMITTED	10/14/02	TEAM LEADER	Submitted By: DANILO C. TRAJANO, Project Director; Reviewed By: JOSEFINA M. ALAGAR, Chief, Highways Division; Recommended By: GILBERTO S. REYES, OIC, Director IV; Recommended By: (See cover sheet for Signature) MANUEL M. BONDAN, Undersecretary; Approved By: (See cover sheet for Signature/Approval) SIMEON A. DATUMANONG, Secretary

PROJECT AND LOCATION :	SCALE :	SHEET CONTENTS :	SHEET NO. :
THE DETAILED DESIGN STUDY ON UPGRADING INTER-URBAN HIGHWAY SYSTEM ALONG THE PAN-PHILIPPINE HIGHWAY (Plaridel, Cabanatuan and San Jose Bypasses)	AS SHOWN	STANDARD ROAD WORK SIGN AND PROJECT SIGN BOARD DETAILS	RS-11
PLARIDEL BYPASS - CONTRACT PACKAGE III	FULL SIZE A1		

1
W1-1(L or R)

2
W1-4 (L)

3
W2-1

4
W2-4

5
W2-5

6
W2-6 (L or R)

7
W2-7

8
W2-8

9
W2-9 (R)

10
W2-10 (L or R)

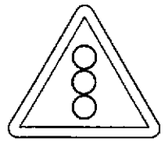
11
W3-1

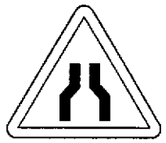
12
W4-2

13
W4-2 (R)

14
W4-3

15
W5-3

16
W5-9

17
W5-10

18
W6-1

19
W6-2

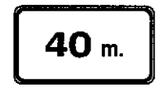

20
W8-3A

21
W8-3B

22
R1-1A

23
R1-2A

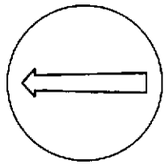
24
R2-2L

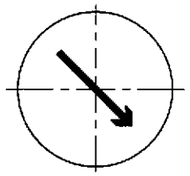
25
R2-3

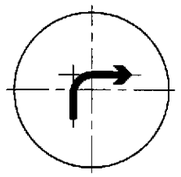
26
R2-4A (R)

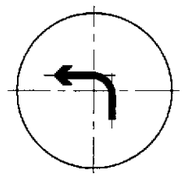
27
R2-4A (L)

28
R2-4P

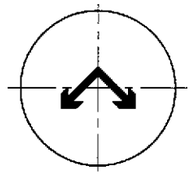
29
R2-5

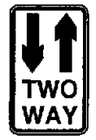

30
R2-6A

31
R2-7A (L)

32
R3-1PA

33
R3-6P

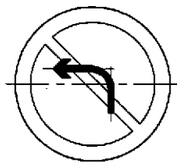
34
R3-13A

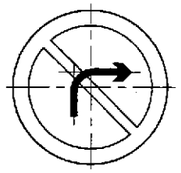
35
R3-14A

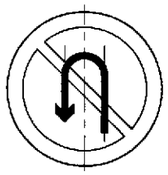
36
R3-15A

37
R3-16

38
R4-1B(80)

39
R4-3B (40)

40
R6-4

41
S2-3

42
S2-6

43
S2-9

44
T4-3 (L OR R)

NOTE:

THE MATERIALS, DIMENSIONS, SIZES OF LETTERS AND NUMERALS, SHAPE, COLOR AND INSTALLATION SHALL BE IN ACCORDANCE WITH THE SPECIFICATIONS OF DPWH's, PHILIPPINE ROAD SIGNS MANUAL, REVISED EDITION, 1982.

LEGEND:

A. WARNING SIGNS
1. SHARP TURN (W1-1)
2. REVERSE CURVE (W1-4) (L)
3. CROSS ROAD (W2-1)
4. T JUNCTION (W2-4)
5. Y JUNCTION (W2-5)
6. SIDE ROAD JUNCTION (W2-6)
7. ROUNDABOUT (W2-7)
8. PRIORITY ROAD (W2-8)
9. PRIORITY ROAD (W2-9) (R)
10. PRIORITY ROAD (W2-10)
11. SIGNALS AHEAD (W3-1)
12. ROAD NARROWS (W4-2)
13. ROAD NARROWED (W4-2) (R)
14. DIVIDED ROAD (W4-3)
15. HUMPS (W5-3)
16. SLIPPERY ROAD (W5-9)
17. CATTLE CROSSING (W5-10)
18. PEDESTRIANS (W6-1)
19. CHILDREN (W6-2)
20. (DISTANCE)...m. (W8-3a)
21. (DISTANCE)...m. (W8-3b)

B. REGULATORY SIGNS
22. STOP (R1-1A)
23. GIVE WAY (R1-2)(A)
24. DIRECTION TO BE FOLLOWED (R2-2)(L)
25. DIRECTION TO BE FOLLOWED (R2-3)
26. DIRECTION TO BE FOLLOWED (R2-4A)(R)
27. DIRECTION TO BE FOLLOWED (R2-4A)(L)
28. DIRECTION TO BE FOLLOWED (R2-4P)
29. DIRECTION TO BE FOLLOWED (R2-5)
30. TWO WAY (R2-6)(A)
31. DIRECTION TO BE FOLLOWED (R2-7A)(L)
32. NO ENTRY (R3-1P)(A)
33. NO ENTRY (R3-6P)
34. TURNING PROHIBITION (R3-13A)
35. TURNING PROHIBITION (R3-14A)
36. TURNING PROHIBITION (R3-15A)
37. PROHIBITION OF OVERTAKING (R3-16)
38. SPEED RESTRICTION (R4-1B)(80)
39. SPEED RESTRICTION (R4-3B)(40)
40. LOAD RESTRICTION (R6-4)
41. TURN RIGHT AT ANY TIME W/ CARE (S2-3)
42. NO RIGHT TURN ON RED SIGNAL (S2-6)
43. ROAD CLOSED (S2-9)
44. HAZARD MARKERS (T4-3)

JICA
JAPAN INTERNATIONAL COOPERATION AGENCY
KEI KATAHIRA & ENGINEERS INTERNATIONAL
YEC YACHIYO ENGINEERING CO., LTD.

	DATE	SIGNATURE
DESIGNED	9/21/02	S. LUNA
CHECKED	9/23/02	S. JOSE
SUBMITTED	10/14/02	TEAM LEADER

REPUBLIC OF THE PHILIPPINES
DEPARTMENT OF PUBLIC WORKS AND HIGHWAYS

PJHL – PMO	BUREAU OF DESIGN		OFFICE OF THE SECRETARY	
Submitted By:	Reviewed By:	Recommended By:	Recommended By: (See cover sheet for Signature)	Approved By: (See cover sheet for Signature/Approval)
DANILO C. TRAJANO	JOSEFINA M. ALAGAR	GILBERTO S. REYES	MANUEL M. BONGAN	SIMEON A. DATUMANONG
Project Director	Chief, Highways Division	OIC, Director IV	Undersecretary	Secretary

PROJECT AND LOCATION :	SCALE :	SHEET CONTENTS :	SHEET NO. :
THE DETAILED DESIGN STUDY ON UPGRADING INTER-URBAN HIGHWAY SYSTEM ALONG THE PAN-PHILIPPINE HIGHWAY (Plaridel, Cabanatuan and San Jose Bypasses)	NOT TO SCALE	STANDARD TRAFFIC SIGNS SIGN INDEX	RS-12
PLARIDEL BYPASS - CONTRACT PACKAGE III	FULL SIZE A1		

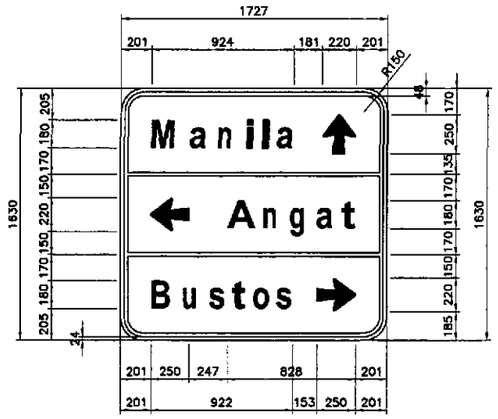

GS-8

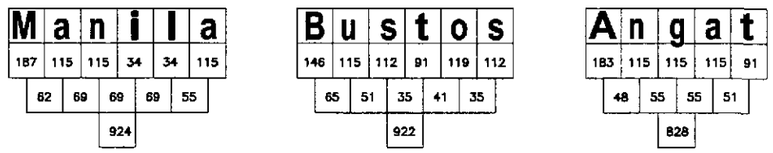

		DATE	SIGNATURE
JICA JAPAN INTERNATIONAL COOPERATION AGENCY	DESIGNED	9/21/02	E. LUNA
KEI KATAHIRA & ENGINEERS INTERNATIONAL / YEC YACHIYO ENGINEERING CO., LTD.	CHECKED	9/23/02	S. GOSE
	SUBMITTED	10/14/02	M. K. KUDO TEAM LEADER

REPUBLIC OF THE PHILIPPINES
DEPARTMENT OF PUBLIC WORKS AND HIGHWAYS

PUHL - PMO	BUREAU OF DESIGN		OFFICE OF THE SECRETARY	
Submitted By:	Reviewed By:	Recommended By:	Recommended By: (See cover sheet for Signature)	Approved By: (See cover sheet for Signature/Approval)
DANILO C. TRAJANO	JOSEFINA M. ALAGAR	GILBERTO S. REYES	MANUEL M. BONDAN	SIMEON A. DATUMANONG
Project Director	Chief, Highways Division	OIC, Director IV	Undersecretary	Secretary

PROJECT AND LOCATION :	SCALE :	SHEET CONTENTS :	SHEET NO. :
THE DETAILED DESIGN STUDY ON UPGRADING INTER-URBAN HIGHWAY SYSTEM ALONG THE PAN-PHILIPPINE HIGHWAY (Plaridel, Cabanatuan and San Jose Bypasses)	AS SHOWN	ADVANCED DIRECTION SIGN DETAILS	RS-13
PLARIDEL BYPASS - CONTRACT PACKAGE III	FULL SIZE A1		

ROADSIDE SIGNS - MOUNTING SELECTION TABLE

SIGN SIZE WIDTH x DEPTH (mm)	NUMBER AND DIAMETER (mm) OF GALVANIZED PIPE POSTS
1200 x 600	2 x 65
1800 x 600	2 x 65
1800 x 1200	2 x 100
2400 x 600	2 x 100
2400 x 1200	2 x 125
2400 x 1800	2 x 125
3000 x 600	2 x 100
3000 x 1200	2 x 125
3000 x 1800	2 x 150
3000 x 2400	2 x 150
3700 x 600	2 x 100
3700 x 1200	2 x 125
3700 x 1800	2 x 150
3700 x 2400	3 x 150
4300 x 600	2 x 100
4300 x 1200	2 x 125
4300 x 1800	3 x 150
4900 x 600	3 x 100
4900 x 1200	3 x 125
4900 x 1800	3 x 150
5500 x 600	3 x 100
5500 x 1200	3 x 125
5500 x 1800	3 x 150
6100 x 600	3 x 100
6100 x 1200	3 x 125
6100 x 1800	3 x 150

FOR INTERMEDIATE SIGN SIZES :

(a.) TAKE DIMENSIONS OF SIGN TO NEAREST 300mm.

(b.) FOR AN ODD DIMENSION TAKE THE NEAREST EVEN HIGHER DIMENSION IN TABLE E.G.:

NOTES:

1. THIS TABLE GIVES NUMBER AND SIZE OF GALVANIZED PIPE POSTS REQUIRED FOR SIGN SIZES SHOWN. ASSUMING UNDERSIDE OF SIGN IS 2.0m CLEAR ABOVE ROAD PAVEMENT. FOR SIGNS WITH CLEARANCES GREATER THAN 2.0m THE WIDTH USED IN THIS TABLE SHOULD BE THE ACTUAL WIDTH INCREASED BY A PERCENTAGE EQUAL TO THE PERCENTAGE INCREASE IN HEIGHT ABOVE 2.0m.
2. 12mm DIAMETER CADIUM – PLATED BOLTS, NUTS AND WASHERS SHALL BE USED FOR ATTACHING SIGN TO POSTS.
3. TOP OF PIPE TO BE SUITABLY CAPPED AND PIPE BASES SHALL BE SEALED AGAINST MOISTURE.
4. ALL DIMENSIONS ARE IN MILLIMETERS UNLESS OTHERWISE INDICATED.

SIGN POST FOUNDATION TABLE

POST PROFILE ø (mm)	FOUNDATION DIAMETER (mm)	FOUNDATION DEPTH (mm)
≤ 100	400	1000
125	425	1200
150	450	1500

CLASSIFICATION FOR INFORMATORY SIGN

	H ≥ 900	H ≤ 1500	H ≤ 2100	H > 2100
W ≤ 2100	A	B	B	–
W ≤ 2700	B	C	C	–
W ≤ 3350	B	C	D	D
W ≤ 4000	B	C	D	G
W ≤ 4600	B	C	G	G
W ≥ 4600	E	F	G	G

NOTE:

LETTERS "A" TO "G" INDICATES THE SIZE CLASSIFICATION FOR INFORMATORY SIGNS SCHEDULE.

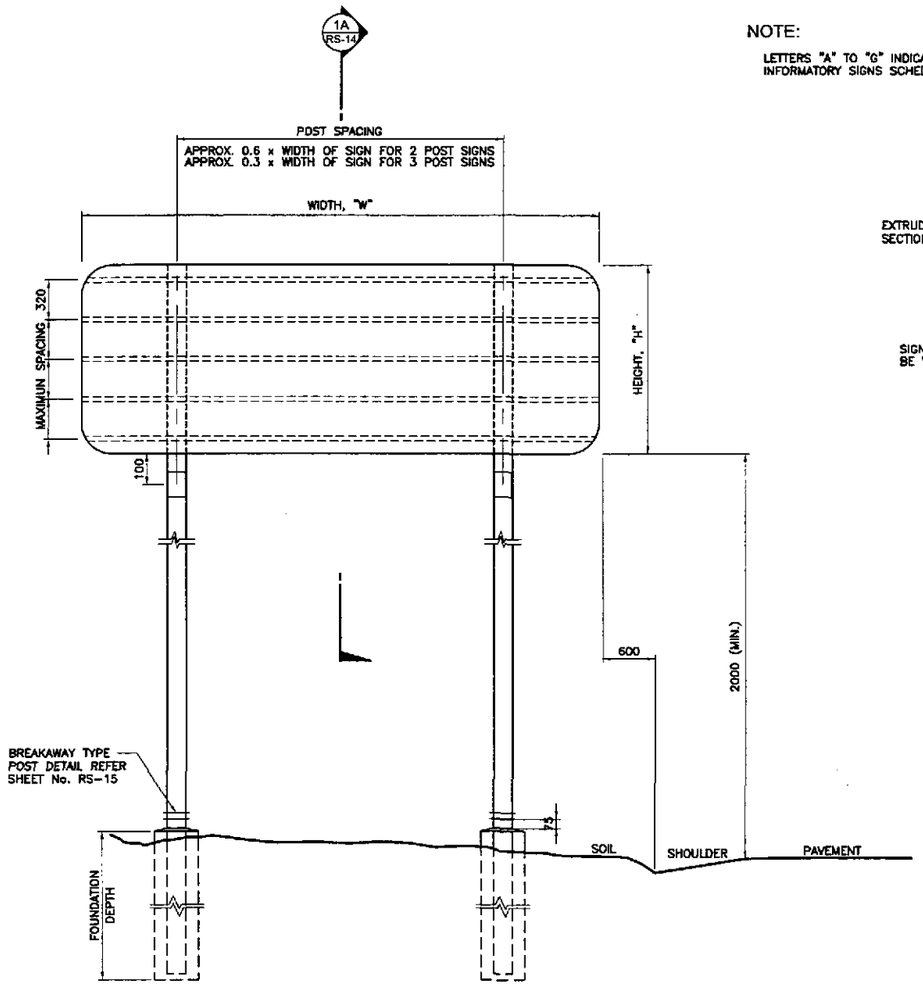

1 / RS-14 TYPICAL SIGN MOUNTING

NOT TO SCALE

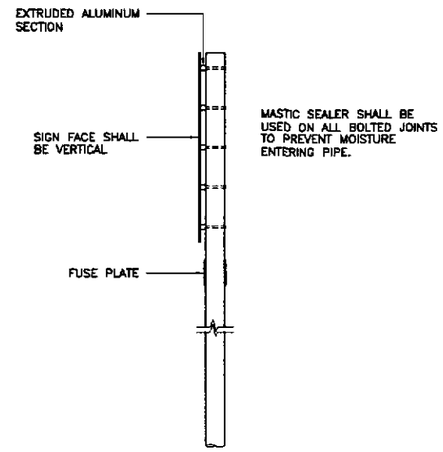

1A / RS-14 SECTION

	DATE	SIGNATURE
DESIGNED	9/21/02	S. LUNA
CHECKED	9/23/02	S. JOSE
SUBMITTED	10/14/02	M. BONOAN TEAM LEADER

JICA JAPAN INTERNATIONAL COOPERATION AGENCY

KEI KATAHIRA & ENGINEERS INTERNATIONAL

YEC YACHIYO ENGINEERING CO., LTD.

REPUBLIC OF THE PHILIPPINES
DEPARTMENT OF PUBLIC WORKS AND HIGHWAYS

PJHL – PMO	BUREAU OF DESIGN		OFFICE OF THE SECRETARY	
Submitted By:	Reviewed By:	Recommended By:	Recommended By: (See cover sheet for Signature)	Approved By: (See cover sheet for Signature/Approval)
DANILO C. TRAJANO Project Director	JOSEFINA M. ALAGAR Chief, Highways Division	GILBERTO S. REYES OIC, Director IV	MANUEL M. BONOAN Undersecretary	SIMEON A. DATUMANONG Secretary

PROJECT AND LOCATION :
THE DETAILED DESIGN STUDY ON UPGRADING INTER-URBAN HIGHWAY SYSTEM ALONG THE PAN-PHILIPPINE HIGHWAY (Plaridel, Cabanatuan and San Jose Bypasses)
PLARIDEL BYPASS - CONTRACT PACKAGE III

SCALE : NOT TO SCALE — FULL SIZE A1

SHEET CONTENTS :
MOUNTING/SUPPORT FOR ROAD SIGN
TYPICAL SIGN MOUNTING DETAILS (1 OF 2)

SHEET NO. : RS-14

NOTE:

SIGN SHALL BE TURNED 3° TO 5° FROM ONCOMING TRAFFIC ON STRAIGHT SECTIONS AND RIGHT HAND CURVES. ON LEFT HAND CURVES THIS ANGLE SHOULD BE SUITABLY INCREASED TO PREVENT GLARE.

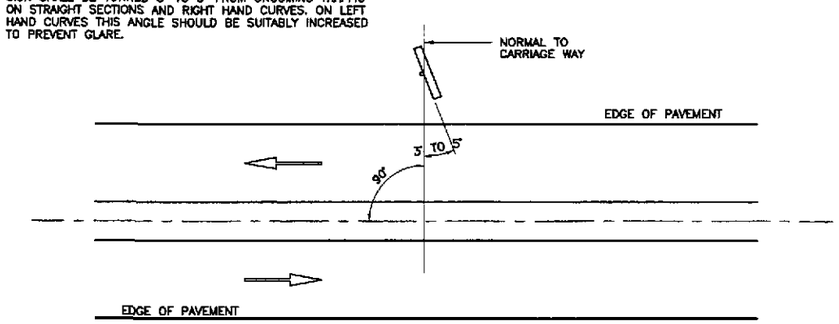

1 RS-15 PLAN VIEW

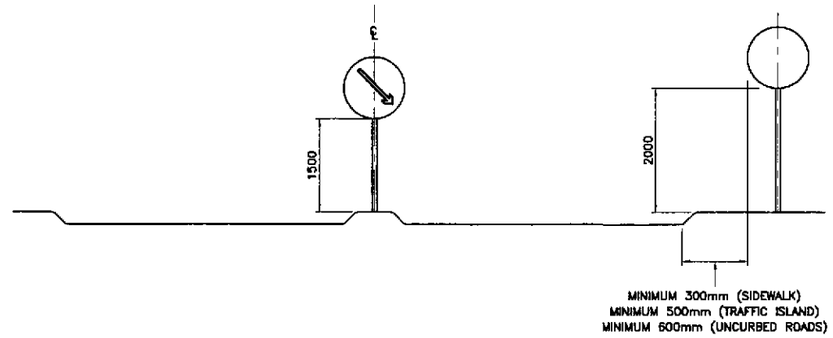

2 RS-15 SIGN POSITIONS

NOT TO SCALE

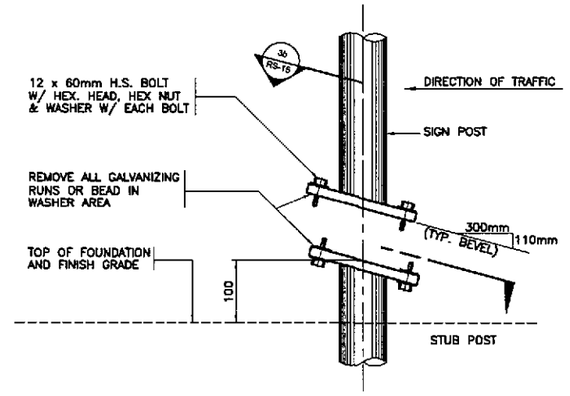

3a RS-15 ELEVATION

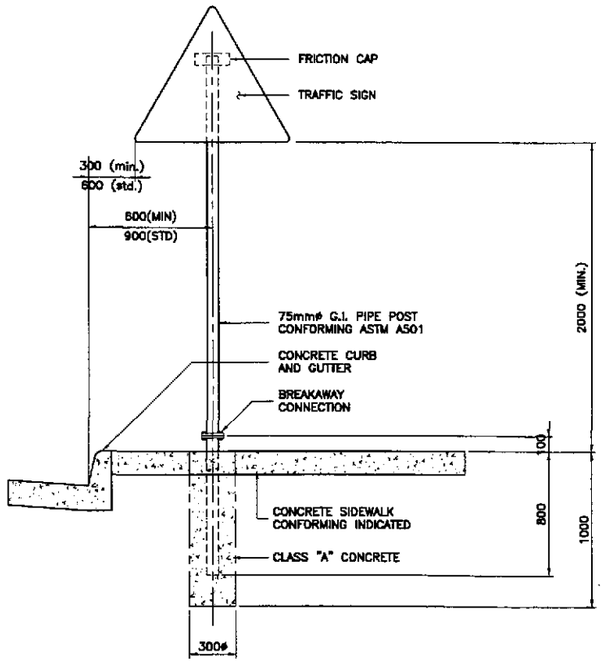

6 RS-15 INSTALLATION DETAILS (TYPE 'A')

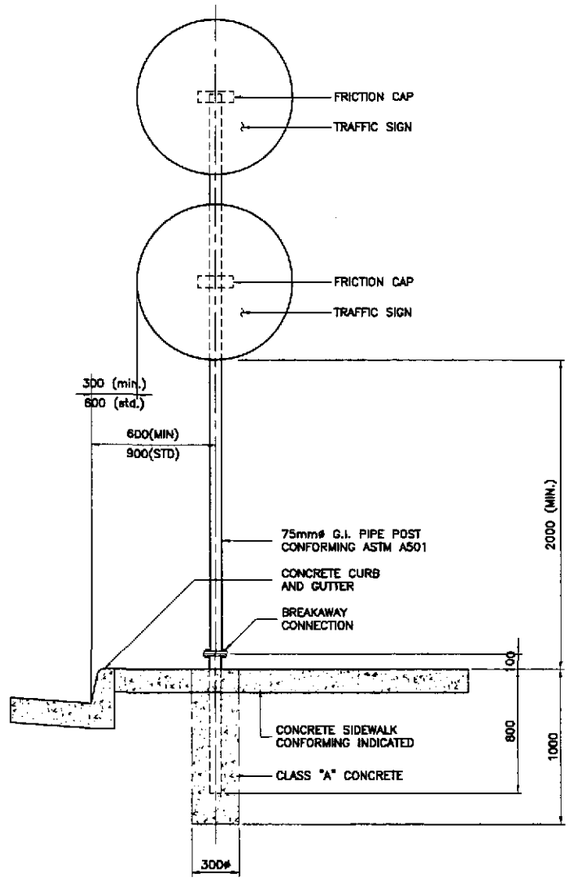

7 RS-15 INSTALLATION DETAILS (TYPE 'B')

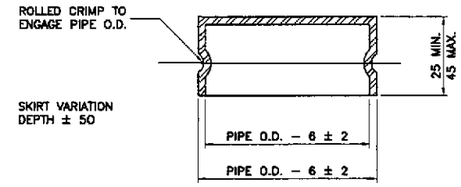

4 RS-15 FRICTION CAP DETAIL

NOTES:

FRICTION CAPS MAY BE MANUFACTURED FROM EITHER HOT ROLLED OR COLD ROLLED STEEL SHEETS MINIMUM SHEET THICKNESS SHALL BE GAUGE 24.

THE RIM EDGE SHALL BE REASONABLY STRAIGHT AND SMOOTH.

CAPS SHALL BE SIZED AND FORMED IN SUCH MANNER AS TO PRODUCE A DRIVE-ON FRICTION FIT AND HAVE NO TENDENCY TO ROCK WHEN SEATED ON THE PIPE. THE DEPTH SHALL BE SUFFICIENT TO GIVE POSITIVE PROTECTION AGAINST THE ENTRANCE OF RAIN WATER. THEY SHALL BE FREE OF SHARP CREASES OR INDENTATION AND SHOW NO EVIDENCE OF METAL FAILURE.

CAPS SHALL HAVE AN ELECTRO DEPOSITED COATING OF ZINC IN ACCORDANCE WITH REQUIREMENTS OF ASTM SPECS. A164, TYPE G.S.

PROCEDURE FOR ASSEMBLY OF BASE CONNECTION:

1. ASSEMBLE POST TO STUB WITH BOLTS AND ONE FLAT WASHER ON EACH BOLT BETWEEN PLATES.
2. SHIM AS REQUIRED TO PLUMB POST.
3. TIGHTEN ALL BOLTS THE MAXIMUM POSSIBLE WITH 300 TO 380mm WRENCH TO BED WASHER AND SHIMS AND CLEAN BOLT TREADS THEN LOOSEN.
4. RETIGHTEN BOLT IN A SYSTEMATIC ORDER TO A TORQUE OF 200in–lb (266.016×10^{-4} KN–M).
5. LOOSEN EACH BOLT AND RETIGHTEN TO THE PRESCRIBED TORQUE IN THE SAME ORDER AS INITIAL TIGHTENING.
6. BURR TREADS AT JUNCTION WITH NUT USING A CENTER PUNCH TO PREVENT NUT LOOSENING.

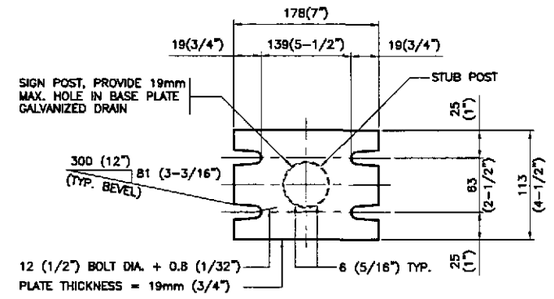

3b RS-15 SECTION

SECTION SHOWN ARE FOR INSTALLATIONS ON RIGHT SHOULDER AND IN GORE. PLATE SLOTS BEVELS ARE OPPOSITE HAND FROM THAT SHOW FOR INSTALLATIONS ON LEFT SHOULDER. PLATES FOR BASE CONNECTION SHALL CONFORM W/ THE REQ'S OF ASTM A 36.

3 RS-15 SIGN POST & STUB POST DETAIL

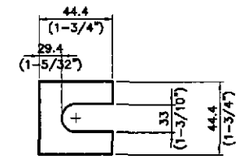

FURNISH 2~012" ± THICK & 2~032" ± THICK SHIMS POST. SHIMS SHALL BE FABRICATED FROM BRASS SHIM STOCK OR STRIP CONFORMING TO ASTM B 36.

5 RS-15 SHIM DETAIL

NOTES:

ALL DIMENSIONS ARE IN MILLIMETERS UNLESS OTHERWISE INDICATED.

MATERIAL AND FABRICATION SHALL CONFORM TO THE REQUIREMENTS OF GENERAL SPECIFICATIONS.

ALL PIPE POST, STRUCTURAL STEEL, BOLTS AND WASHER SHALL BE GALVANIZED AS PER AASHTO M III.

ALL HIGH STRENGTH BOLTS AND WASHER SHALL CONFORM TO ASTM–325 AND ALL HIGH STRENGTH NUTS SHALL BE OF SUCH CAPACITY AS TO DEVELOP THE BOLT STRENGTH.

TIGHTEN THE HIGH STRENGTH BOLTS IN THE BASE CONNECTION BY THE USE OF TORQUE. DO NOT OVERTIGHTEN.

DESIGN TORQUE EQUALS TO 200in–lb(266.016×10^{-4} KN–m)

TYPICAL SIGN MOUNTING DETAILS

NOT TO SCALE

JICA
JAPAN INTERNATIONAL COOPERATION AGENCY
KEI KATAHIRA & ENGINEERS INTERNATIONAL
YEC YACHIYO ENGINEERING CO., LTD.

	DATE	SIGNATURE
DESIGNED	9/21/02	S. LUNA
CHECKED	9/23/02	S. GOSE
SUBMITTED	10/11/02	TEAM LEADER

REPUBLIC OF THE PHILIPPINES
DEPARTMENT OF PUBLIC WORKS AND HIGHWAYS

PJHL – PMO	BUREAU OF DESIGN		OFFICE OF THE SECRETARY	
Submitted By:	Reviewed By:	Recommended By:	Recommended By: (See cover sheet for Signature)	Approved By: (See cover sheet for Signature/Approval)
DANILO C. TRAJANO	JOSEFINA M. ALAGAR	GILBERTO S. REYES	MANUEL M. BONDAN	SIMEON A. DATUMANONG
Project Director	Chief, Highways Division	OIC, Director IV	Undersecretary	Secretary

PROJECT AND LOCATION :	SCALE :	SHEET CONTENTS :	SHEET NO. :
THE DETAILED DESIGN STUDY ON UPGRADING INTER-URBAN HIGHWAY SYSTEM ALONG THE PAN-PHILIPPINE HIGHWAY (Plaridel, Cabanatuan and San Jose Bypasses)	NOT TO SCALE	MOUNTING / SUPPORT FOR ROAD SIGN TYPICAL SIGN MOUNTING DETAILS (2 OF 2)	RS-15
PLARIDEL BYPASS - CONTRACT PACKAGE III	FULL SIZE A1		

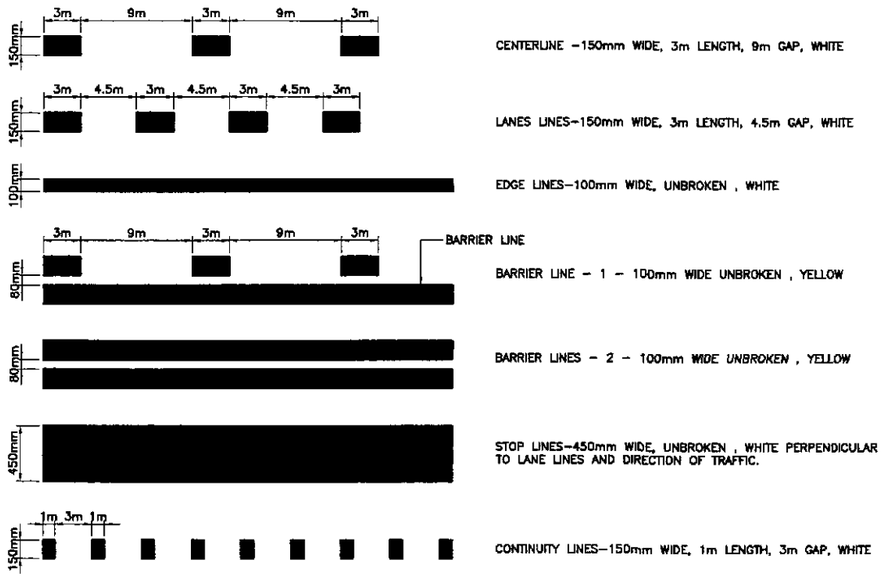

1B RS-16 BYPASS MAIN LINE
NOT TO SCALE

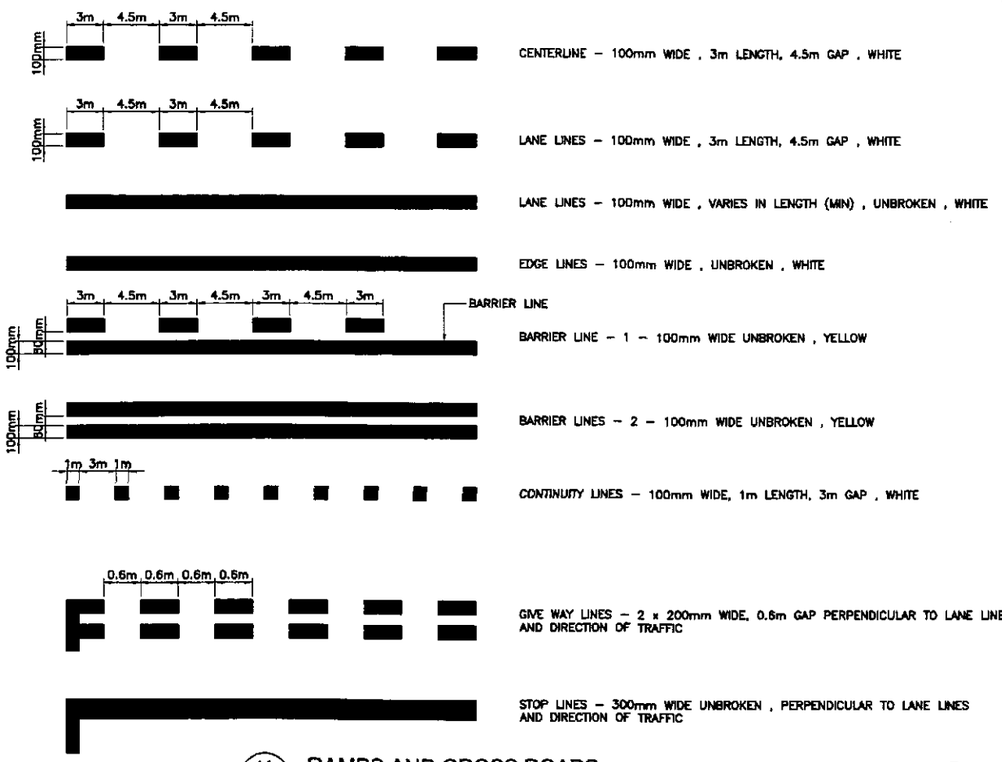

1A RS-16 RAMPS AND CROSS ROADS
NOT TO SCALE

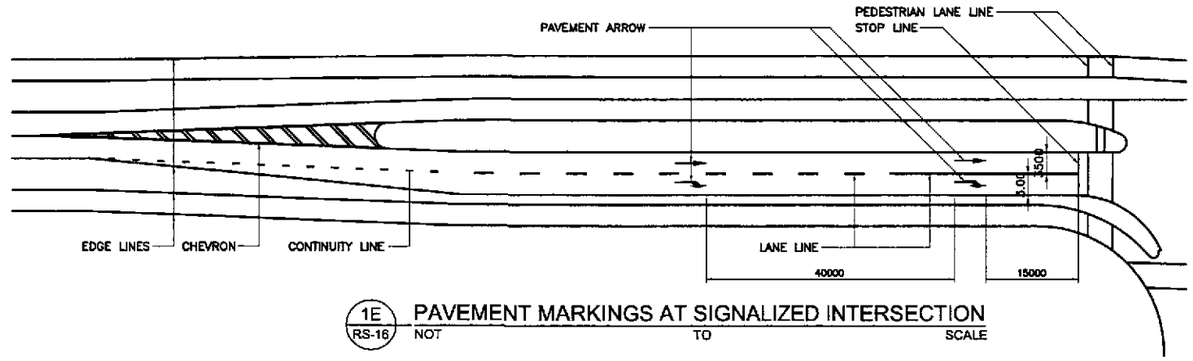

1E RS-16 PAVEMENT MARKINGS AT SIGNALIZED INTERSECTION
NOT TO SCALE

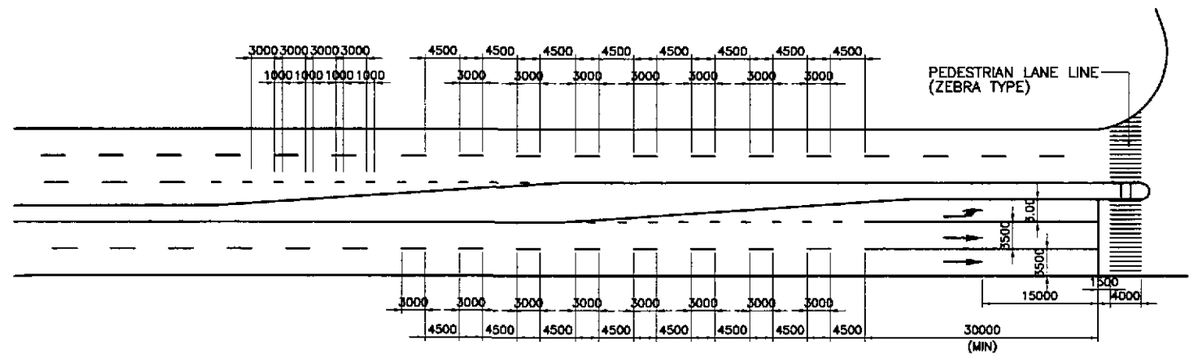

1D RS-16 PAVEMENT MARKINGS AT UNSIGNALIZED INTERSECTION
NOT TO SCALE

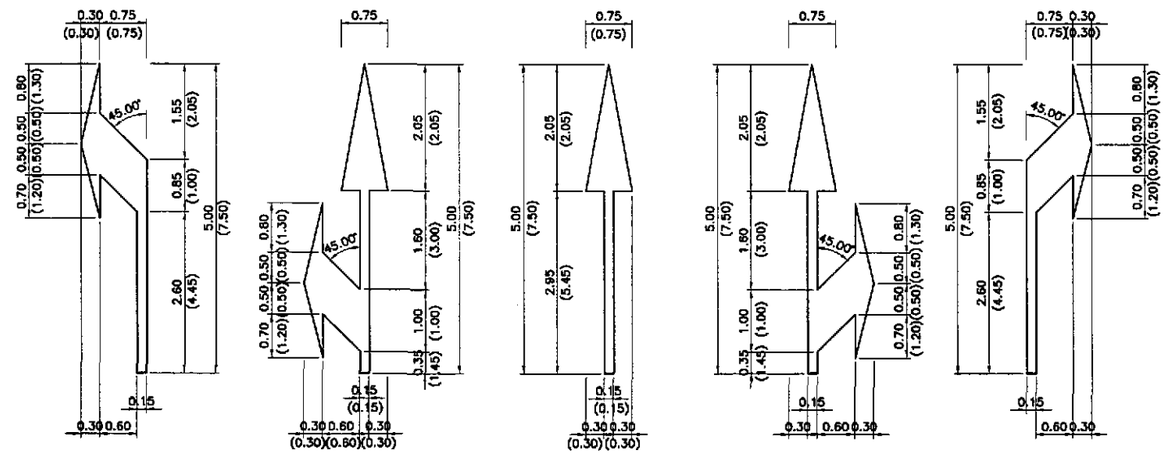

1C RS-16 STANDARD PAVEMENT ARROWS
NOT TO SCALE

NOTE:

VALUES IN PARENTHESIS ( ) ARE FOR SPEED LIMIT OVER 60 KPH.

MATERIALS, DIMENSIONS AND COLOR OF STANDARD PAVEMENT ARROWS SHALL CONFORM IN ACCORDANCE WITH THE SPECIFICATION DEFINED IN THE DPWH MANUAL OF PAVEMENT MARKINGS, 1980 EDITION.

1 RS-16 STANDARD PAVEMENT MARKINGS
NOT TO SCALE

JICA
JAPAN INTERNATIONAL COOPERATION AGENCY
KEI KATAHIRA & ENGINEERS INTERNATIONAL
YEC YACHIYO ENGINEERING CO., LTD.

	DATE	SIGNATURE
DESIGNED	9/21/02	S. LUNA
CHECKED	9/23/02	S. JOSE
SUBMITTED	10/14/02	TEAM LEADER

REPUBLIC OF THE PHILIPPINES
DEPARTMENT OF PUBLIC WORKS AND HIGHWAYS

PJHL – PMO	BUREAU OF DESIGN		OFFICE OF THE SECRETARY	
Submitted By:	Reviewed By:	Recommended By:	Recommended By: (See cover sheet for Signature)	Approved By: (See cover sheet for Signature/Approval)
DANILO C. TRAJANO	JOSEFINA M. ALAGAR	GILBERTO S. REYES	MANUEL M. BONGAN	SIMEON A. DATUMANONG
Project Director	Chief, Highways Division	OIC, Director IV	Undersecretary	Secretary

PROJECT AND LOCATION :	SCALE :	SHEET CONTENTS :	SHEET NO. :
THE DETAILED DESIGN STUDY ON UPGRADING INTER-URBAN HIGHWAY SYSTEM ALONG THE PAN-PHILIPPINE HIGHWAY (Plaridel, Cabanatuan and San Jose Bypasses) PLARIDEL BYPASS - CONTRACT PACKAGE III	NOT TO SCALE FULL SIZE A1	STANDARD PAVEMENT MARKINGS Sheet 1 OF 2	RS-16

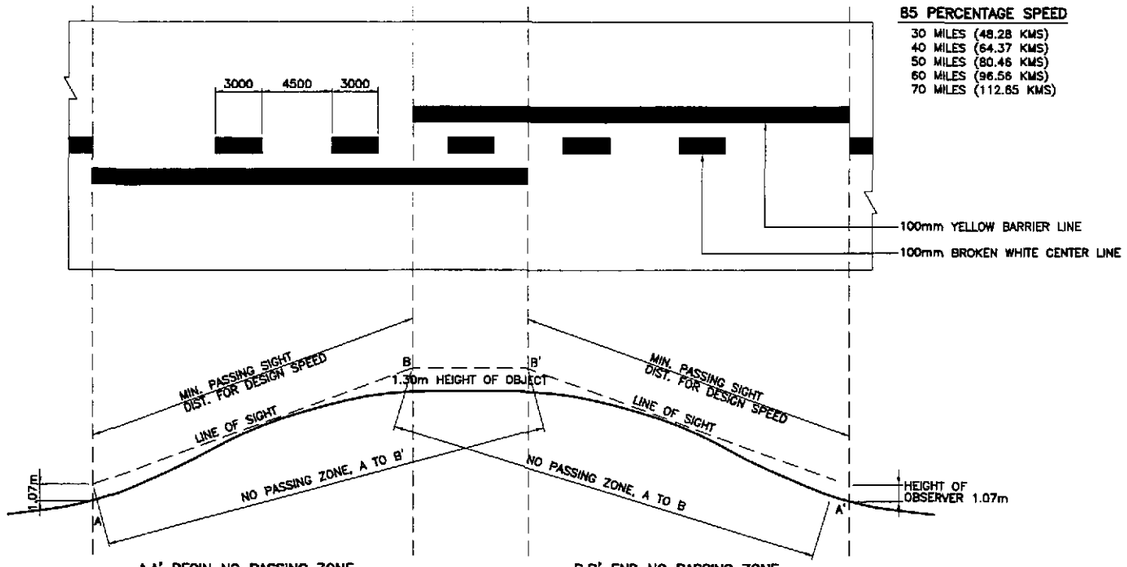

85 PERCENTAGE SPEED

30 MILES (48.28 KMS)
40 MILES (64.37 KMS)
50 MILES (80.46 KMS)
60 MILES (96.56 KMS)
70 MILES (112.65 KMS)

A,A' BEGIN NO PASSING ZONE
SIGHT DISTANCE BECOMES LESS THAN MIN. MEASURED BETWEEN POINTS 1.30 METER ABOVE PAVEMENT.

B,B' END NO PASSING ZONE
SIGHT DISTANCE AGAIN EXCEEDS MINIMUM.

NOTE:
NO PASSING ZONE IN OPPOSITE DIRECTION MAY OR MAY NOT OVERLAP DEPENDING ON VERTICAL ALIGNMENT AND DESIGN SPEED. FOR NO OVERLAPPING TYPE. REFEER TO FIGURE 6 OF DPWH MANUAL ON PAVEMENT MARKINGS (1980). IF REQUIRED.

85 PERCENTILE SPEED (Km/h)	MIN. SIGHT DISTANCE (1.15m to 1.15m) (m)	MIN. LENGTH OR BARRER LINE L (m)	MIN. DISTANCE BETWEEN BARRER LINE (m)
50	150	75	150
60	180	90	175
70	210	105	200

1B RS-17 NO-PASSING LINES ON HORIZONTAL CURVES (OVERLAPPING TYPE)
NOT TO SCALE

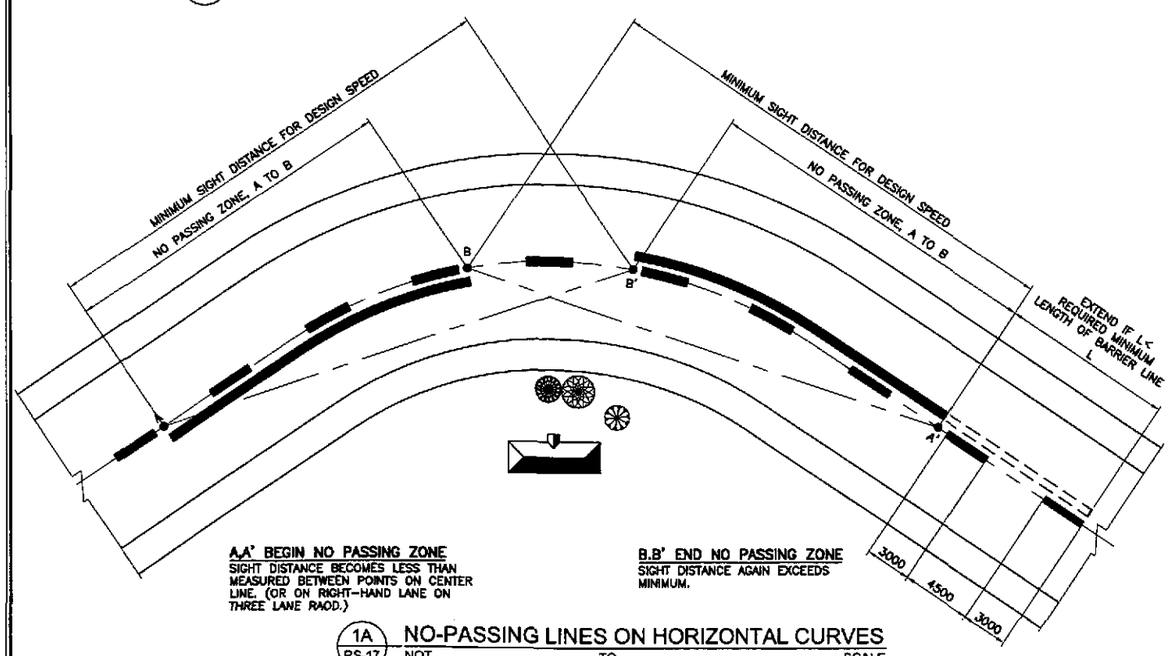

A,A' BEGIN NO PASSING ZONE
SIGHT DISTANCE BECOMES LESS THAN MEASURED BETWEEN POINTS ON CENTER LINE. (OR ON RIGHT-HAND LANE ON THREE LANE RAOD.)

B,B' END NO PASSING ZONE
SIGHT DISTANCE AGAIN EXCEEDS MINIMUM.

1A RS-17 NO-PASSING LINES ON HORIZONTAL CURVES
NOT TO SCALE

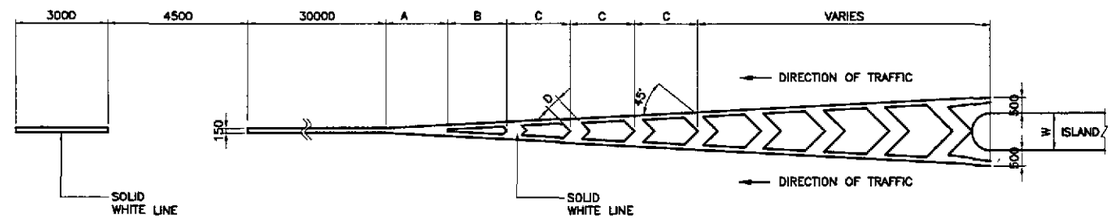

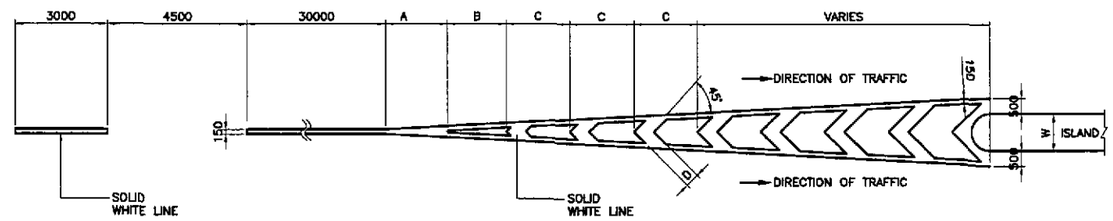

1E RS-17 CHEVRON MARKINGS
NOT TO SCALE

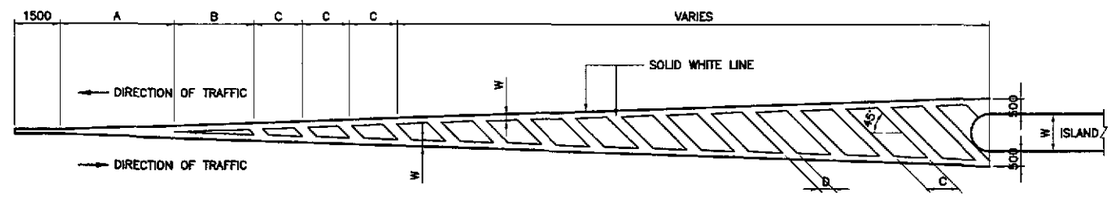

1D RS-17 CHEVRON MARKINGS NEAR OBSTRUCTION
NOT TO SCALE

	RAMPS & OTHER ROADS (60 KPH OR LESS)	BYPASS MAINLINE (GREATER THAN 60 KPH)
W	150mm	150mm
D	500mm	1000mm
A	1.5m	3.0m
B	2.0m	4.0m
C	4.0m	8.0m

NOTE:
PROVIDE CONCRETE CHATTER BARS AT BOTH SIDES OF CHEVRON MARKINGS MIDWAYS BETWEEN DIAGONAL MARKINGS AND PAVEMENT STUDS AT THE END SPACED 5.00 m. ON CENTERS.

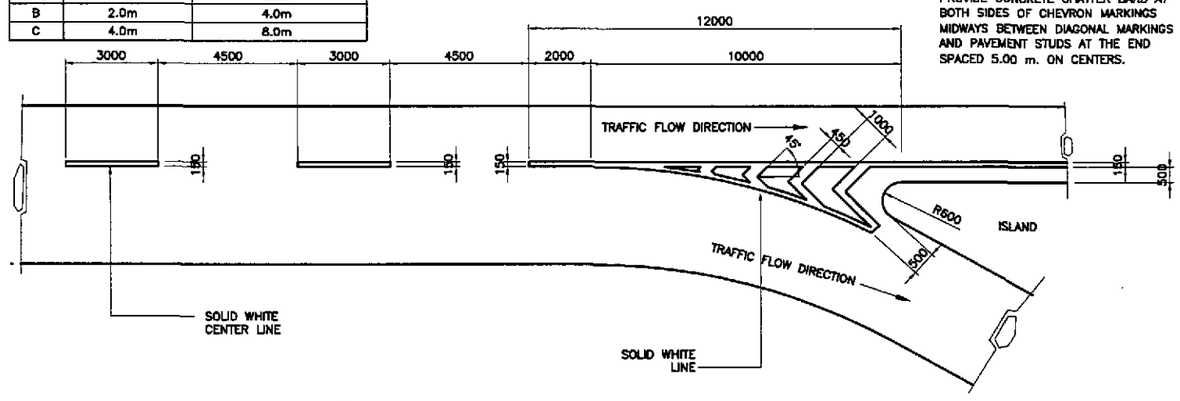

1C RS-17 CHEVRON MARKINGS AT INTERSECTION
NOT TO SCALE

1 RS-17 STANDARD PAVEMENT MARKINGS
NOT TO SCALE

JICA
JAPAN INTERNATIONAL COOPERATION AGENCY
KEI KATAHIRA & ENGINEERS INTERNATIONAL
YEC YACHIYO ENGINEERING CO., LTD.

	DATE	SIGNATURE
DESIGNED	9/21/02	S. LUNA
CHECKED	9/23/02	S. JOSE
SUBMITTED	10/14/02	TEAM LEADER

REPUBLIC OF THE PHILIPPINES
DEPARTMENT OF PUBLIC WORKS AND HIGHWAYS

PJHL – PMO	BUREAU OF DESIGN		OFFICE OF THE SECRETARY	
Submitted By:	Reviewed By:	Recommended By:	Recommended By: (See cover sheet for Signature)	Approved By: (See cover sheet for Signature/Approval)
DANILO C. TRAJANO	JOSEFINA M. ALAGAR	GILBERTO S. REYES	MANUEL M. BONDAN	SIMEON A. DATUMANONG
Project Director	Chief, Highways Division	DIC, Director IV	Undersecretary	Secretary

PROJECT AND LOCATION :
THE DETAILED DESIGN STUDY ON UPGRADING INTER-URBAN HIGHWAY SYSTEM ALONG THE PAN-PHILIPPINE HIGHWAY (Plaridel, Cabanatuan and San Jose Bypasses)
PLARIDEL BYPASS - CONTRACT PACKAGE III

SCALE : NOT TO SCALE
FULL SIZE A1

SHEET CONTENTS : STANDARD PAVEMENT MARKINGS
SHEET 2 OF 2

SHEET NO. : RS-17

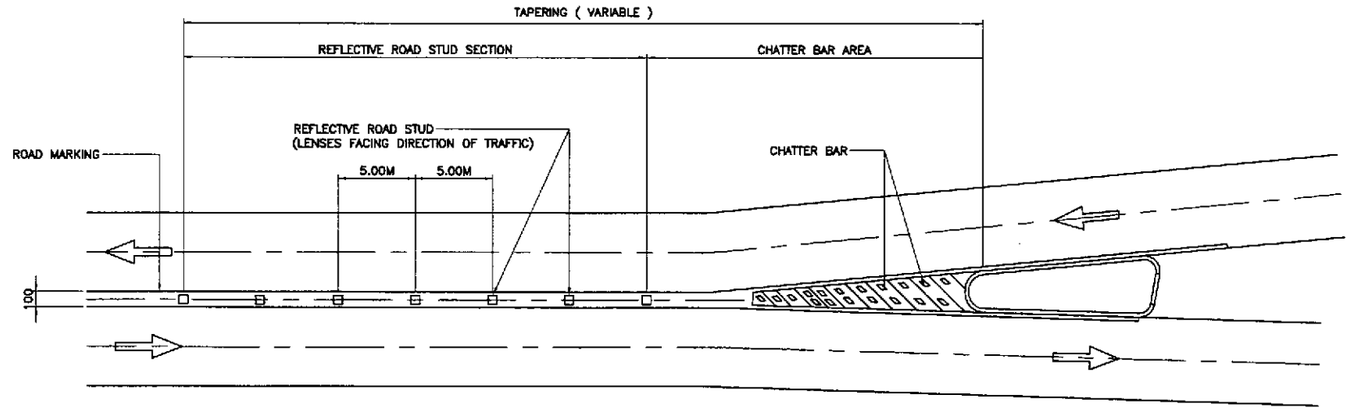

3 / RS-18 LOCATION OF ROAD STUDS AND CHATTER BARS

NOT TO SCALE

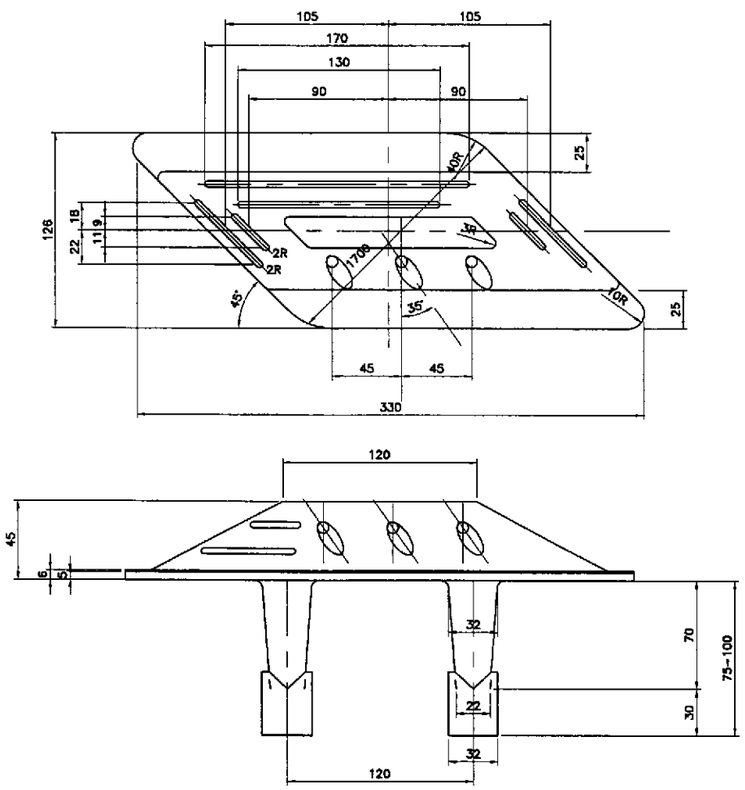

1 / RS-18 CHATTER BAR
(WITH LENSES ON 1 - SIDE)

SCALE 1:20 M

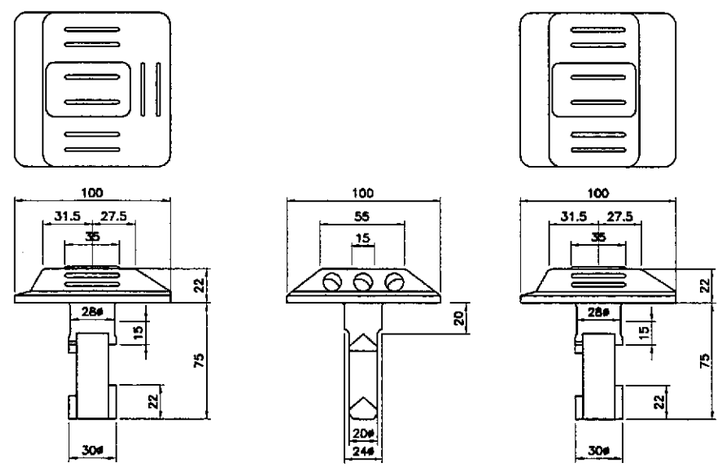

WITH LENS ON ONE SIDE

WITH LENSES ON TWO SIDES

2 / RS-18 REFLECTIVE ROAD STUDS FOR CONCRETE
(WITH LENSES ON ONE - SIDE / TWO SIDES)

SCALE 1:20

JICA
JAPAN INTERNATIONAL COOPERATION AGENCY
KATAHIRA & ENGINEERS INTERNATIONAL
YACHIYO ENGINEERING CO., LTD.

	DATE	SIGNATURE
DESIGNED	9/21/02	S. LUNA
CHECKED	9/23/02	S. COSE
SUBMITTED	10/11/02	TEAM LEADER

REPUBLIC OF THE PHILIPPINES
DEPARTMENT OF PUBLIC WORKS AND HIGHWAYS

PJHL - PMO	BUREAU OF DESIGN		OFFICE OF THE SECRETARY	
Submitted By:	Reviewed By:	Recommended By:	Recommended By: (See cover sheet for Signature)	Approved By: (See cover sheet for Signature/Approval)
DANILO C. TRAJANO	JOSEFINA M. ALAGAR	GILBERTO S. REYES	MANUEL M. BONDAN	SIMEON A. DATUMANONG
Project Director	Chief, Highways Division	OIC, Director IV	Undersecretary	Secretary

PROJECT AND LOCATION :
THE DETAILED DESIGN STUDY ON UPGRADING INTER-URBAN HIGHWAY SYSTEM ALONG THE PAN-PHILIPPINE HIGHWAY (Plaridel, Cabanatuan and San Jose Bypasses)
PLARIDEL BYPASS - CONTRACT PACKAGE III

SCALE : AS SHOWN
FULL SIZE A1

SHEET CONTENTS : REFLECTIVE ROAD STUDS AND CONCRETE CHATTER BAR AND DETAILS

SHEET NO. : RS-18

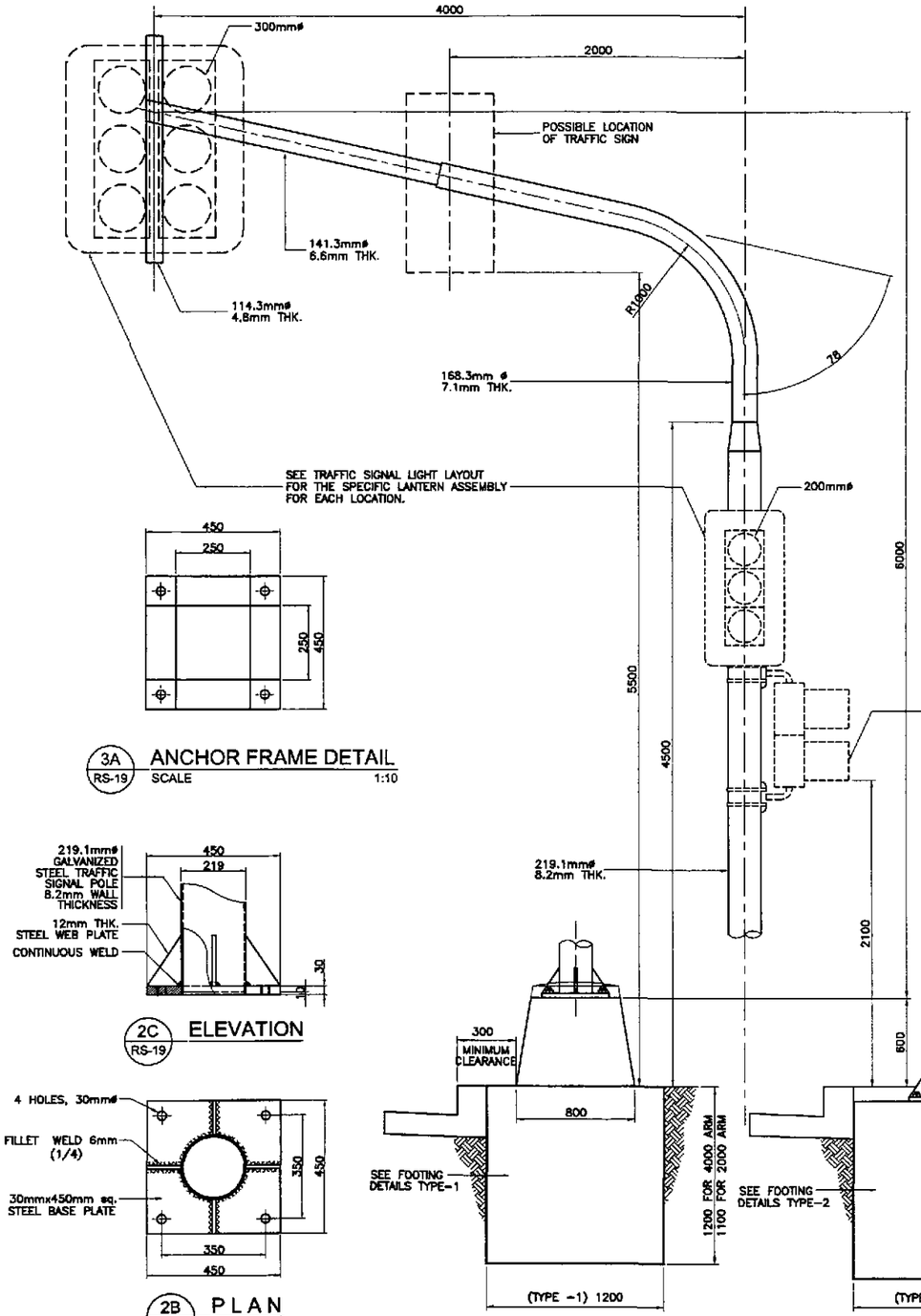

1B RS-19 FRONT VIEW
SCALE 1:20

1C RS-19 SIDE VIEW
SCALE 1:20

1A RS-19 MAST ARM VEHICLE SIGNAL POST
SCALE 1:20

A RS-19 TRAFFIC SIGNAL POST TYPE A
SCALE 1:20

3A RS-19 ANCHOR FRAME DETAIL
SCALE 1:10

2C RS-19 ELEVATION

2B RS-19 PLAN

2A RS-19 BASE PLATE DETAIL
SCALE 1:10

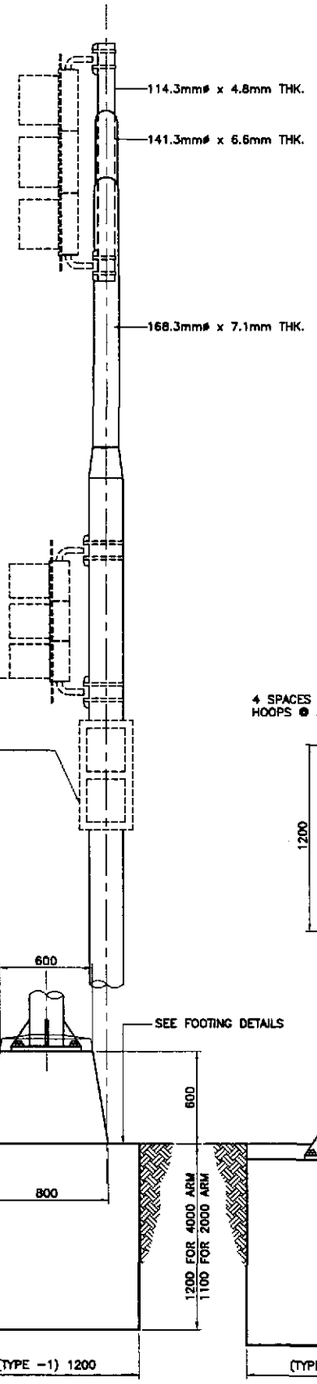

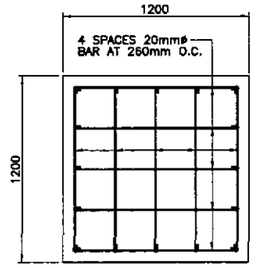

5B RS-19 SECTION

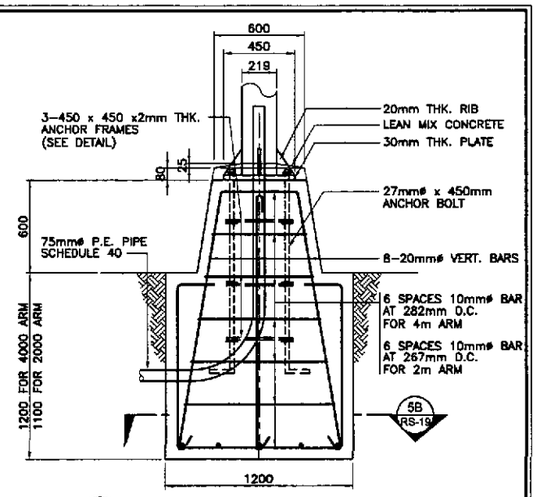

5C RS-19 SECTION THROUGH FOOTING

FOOTING DETAILS
5A RS-19 TYPE-1 (MOUNTING WITH PEDESTAL)
SCALE 1:20

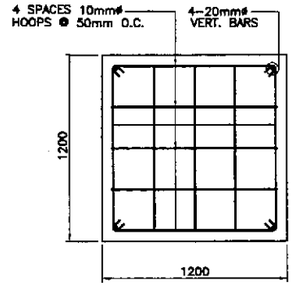

4B RS-19 SECTION

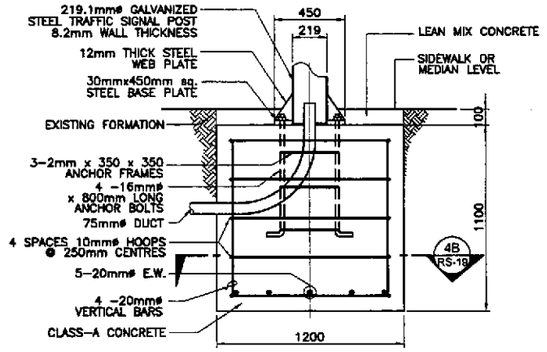

4C RS-19 SECTION THROUGH FOOTING

FOOTING DETAILS
4A RS-19 TYPE-2 (MOUNTING AT SIDEWALK LEVEL)
SCALE 1:20

NOTES:

1. ALL DIMENSIONS ARE IN MILLIMETERS UNLESS OTHERWISE SPECIFIED.
2. TYPE-1 POST SHALL BE USED FOR POSTS LOCATED ON MEDIAN AND CORNER ISLANDS. TYPE-2 POSTS SHALL BE USED FOR POSTS LOCATED ON SIDEWALKS.
3. STANDARD TRAFFIC SIGNAL POST DESIGN (TYPE A, B, C & D) BASED ON MANUAL FOR THE DESIGN AND LAYOUT OF TRAFFIC SIGNALS IN THE PHILIPPINES, TRAFFIC ENGINEERING CENTER, JANUARY 1983.

JICA
JAPAN INTERNATIONAL COOPERATION AGENCY
KEI KATAHIRA & ENGINEERS INTERNATIONAL
YEC YACHIYO ENGINEERING CO., LTD.

	DATE	SIGNATURE
DESIGNED	9/21/02	J. CATBAGAN
CHECKED	9/23/02	S. GOSE
SUBMITTED	10/14/02	TEAM LEADER

REPUBLIC OF THE PHILIPPINES
DEPARTMENT OF PUBLIC WORKS AND HIGHWAYS

PJHL - PMO	BUREAU OF DESIGN		OFFICE OF THE SECRETARY	
Submitted By:	Reviewed By:	Recommended By:	Recommended By: (See cover sheet for Signature)	Approved By: (See cover sheet for Signature/Approval)
DANILO C. TRAJANO	JOSEFINA M. ALAGAR	GILBERTO S. REYES	MANUEL M. BONGAN	SIMEON A. DATUMANONG
Project Director	Chief, Highways Division	OIC, Director IV	Undersecretary	Secretary

PROJECT AND LOCATION :
THE DETAILED DESIGN STUDY ON UPGRADING INTER-URBAN HIGHWAY SYSTEM ALONG THE PAN-PHILIPPINE HIGHWAY (Plaridel, Cabanatuan and San Jose Bypasses)
PLARIDEL BYPASS - CONTRACT PACKAGE III

SCALE : AS SHOWN
FULL SIZE A1

SHEET CONTENTS : TRAFFIC SIGNAL POST TYPE 'A' AND FOUNDATION DETAILS

SHEET NO. : RS-19

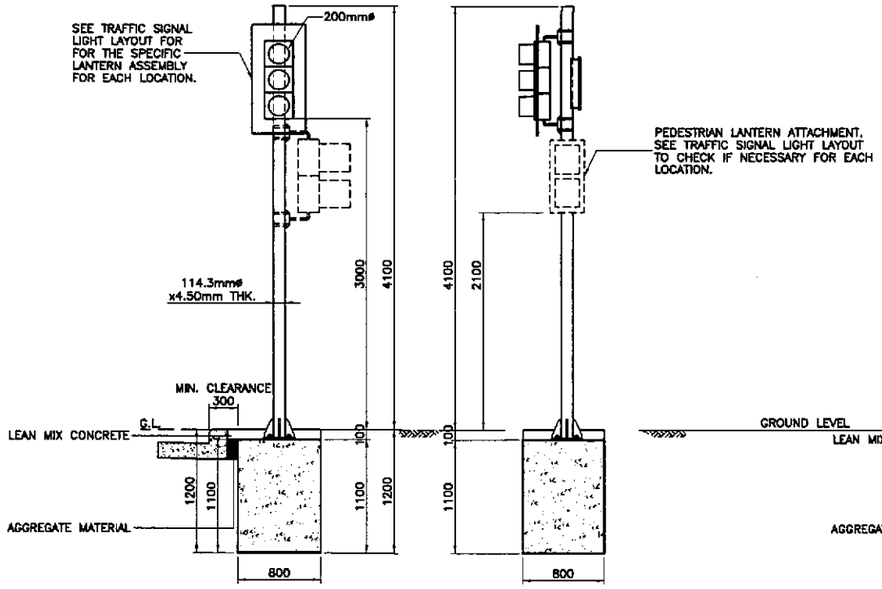

1A RS-20 TYPE B-1
SCALE 1:30

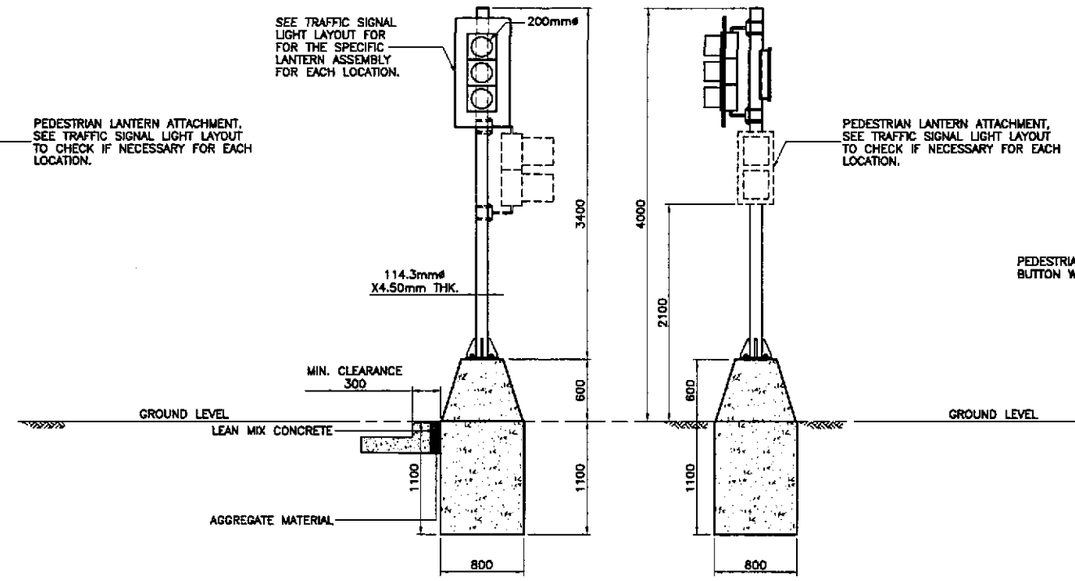

2A RS-20 TYPE C-1
SCALE 1:30

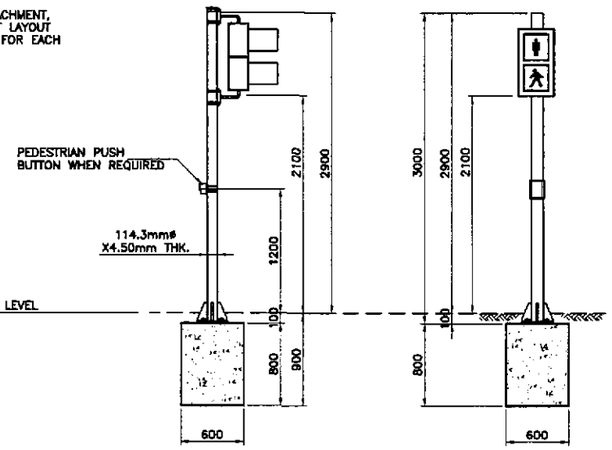

3 RS-20 TRAFFIC SIGNAL POST TYPE D
SCALE 1:30

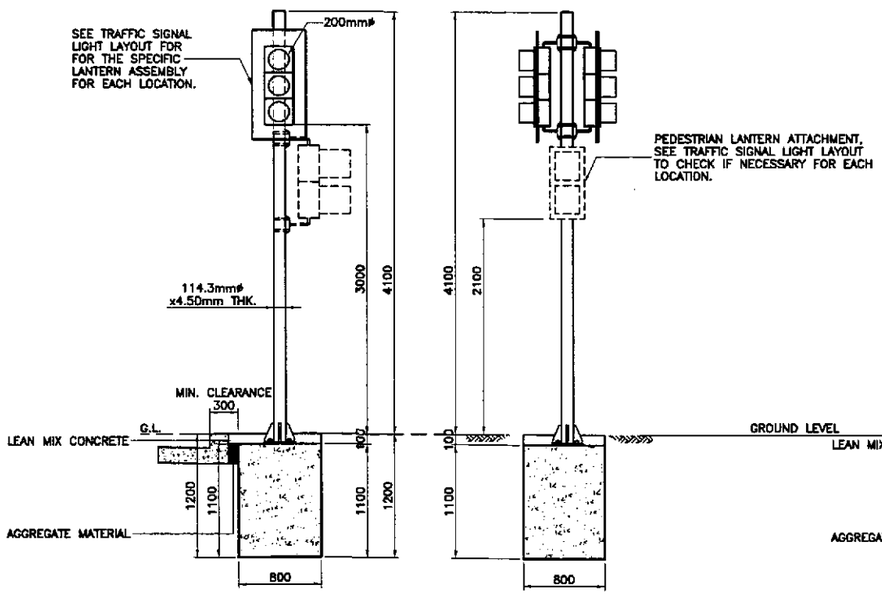

1B RS-20 TYPE B-2
SCALE 1:30

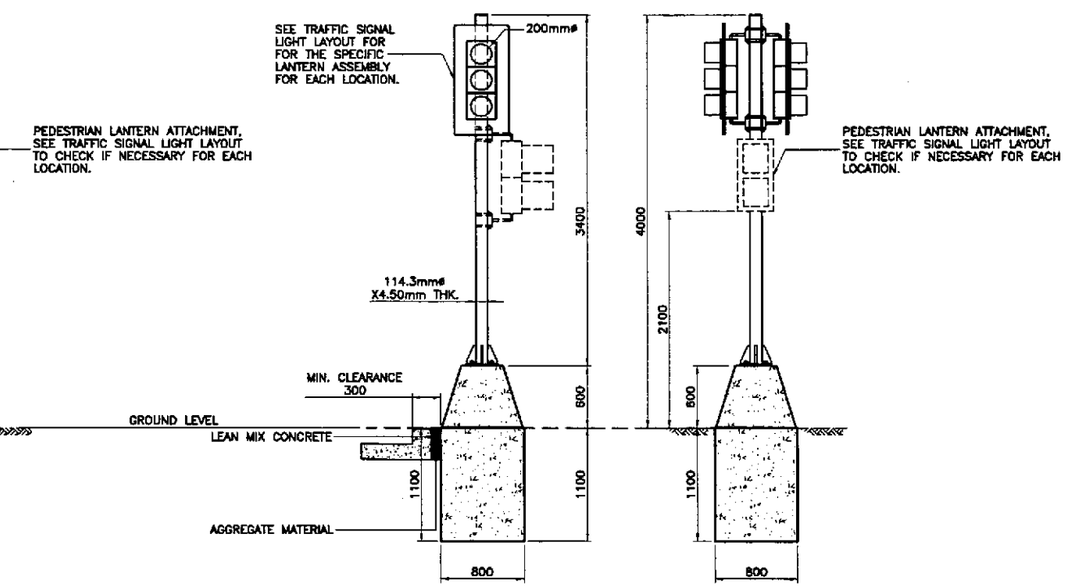

2B RS-20 TYPE C-2
SCALE 1:30

1 RS-20 TRAFFIC SIGNAL POST TYPE B
SCALE 1:30

2 RS-20 TRAFFIC SIGNAL POST TYPE C
SCALE 1:30

NOTES:

1. POST ON SIDEWALKS SHOULD BE LOCATED AT A MINIMUM OF 0.60m (0.75 FOR MAST ARMS) FROM THE FACE OF THE CURB.
2. POST ON MEDIAN ISLANDS MUST BE OFFSET AT LEAST 1.5m FROM THE NOSE OF THE ISLAND AND MOUNTED ON CONCRETE PEDESTALS AT LEAST 0.60m HIGH.
3. POST AND MAST ARMS ON CORNER ISLANDS SHOULD BE AT LEAST 1.0m FROM THE FACE OF THE CURB AND MOUNTED ON CONCRETE PEDESTALS 0.60m HIGH.
4. PEDESTRIAN LANTERN ATTACHMENTS ARE INCLUDED ONLY IF SPECIFIED IN THE TRAFFIC SIGNAL LIGHT LAYOUT.

JICA
JAPAN INTERNATIONAL COOPERATION AGENCY
KEI KATAHIRA & ENGINEERS INTERNATIONAL
YEC YACHIYO ENGINEERING CO., LTD.

	DATE	SIGNATURE
DESIGNED	9/21/02	J. CATBAGAN
CHECKED	9/23/02	S. JOSE
SUBMITTED	10/14/02	TEAM LEADER

REPUBLIC OF THE PHILIPPINES
DEPARTMENT OF PUBLIC WORKS AND HIGHWAYS

PJHL – PMO	BUREAU OF DESIGN		OFFICE OF THE SECRETARY	
Submitted By:	Reviewed By:	Recommended By:	Recommended By: (See cover sheet for Signature)	Approved By: (See cover sheet for Signature/Approval)
DANILO C. TRAJANO	JOSEFINA M. ALAGAR	GILBERTO S. REYES	MANUEL M. BONDAN	SIMEON A. DATUMANONG
Project Director	Chief, Highways Division	OIC, Director IV	Undersecretary	Secretary

PROJECT AND LOCATION :	SCALE :	SHEET CONTENTS :	SHEET NO. :
THE DETAILED DESIGN STUDY ON UPGRADING INTER-URBAN HIGHWAY SYSTEM ALONG THE PAN-PHILIPPINE HIGHWAY (Plaridel, Cabanatuan and San Jose Bypasses)	AS SHOWN	TRAFFIC SIGNAL POST TYPES 'B', 'C' & 'D'	RS-20
PLARIDEL BYPASS - CONTRACT PACKAGE III	FULL SIZE A1		

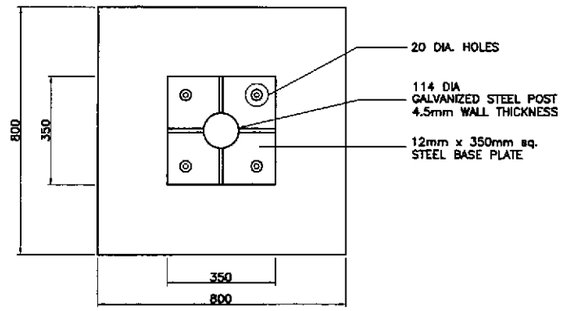

PLAN OF FOOTING

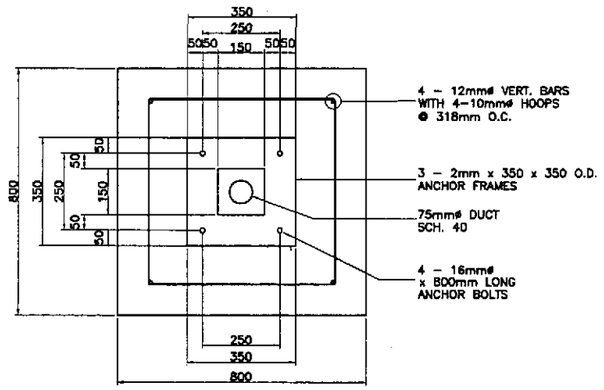

SECTION THRU A OF TYPE B

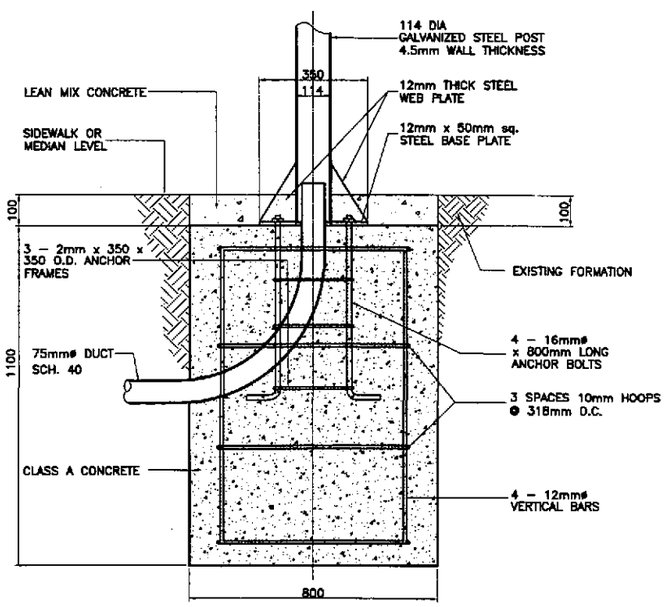

SECTION THROUGH FOUNDATION
(4.1 SIGNAL POST)

VEHICLE SIGNAL POST FOUNDATION (TYPE B)

1 / RS-21 SCALE 1:10

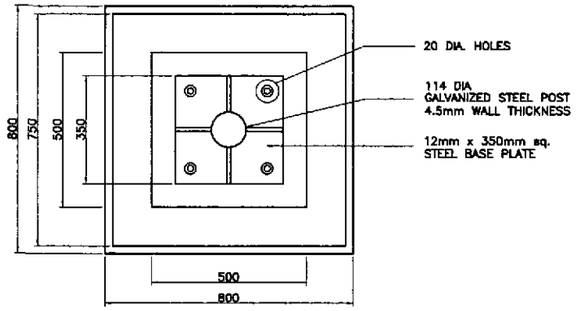

PLAN OF FOOTING

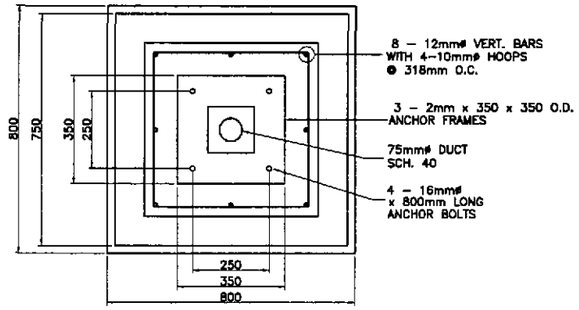

SECTION THRU A OF TYPE C

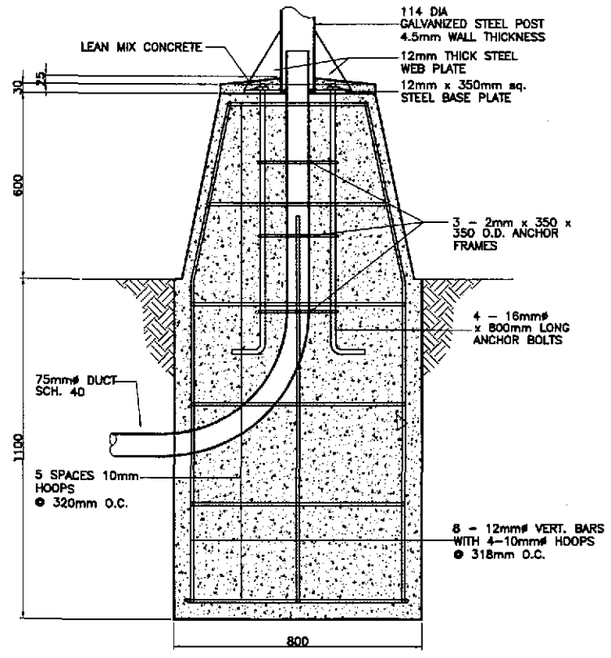

SECTION THROUGH FOUNDATION
(4.1 SIGNAL POST)

VEHICLE SIGNAL POST FOUNDATION (TYPE C)

2 / RS-21 SCALE 1:10

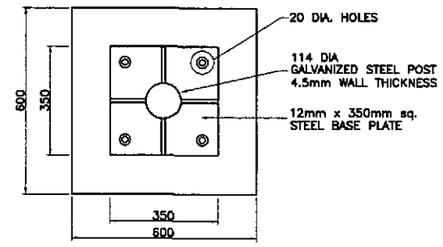

PLAN OF FOOTING

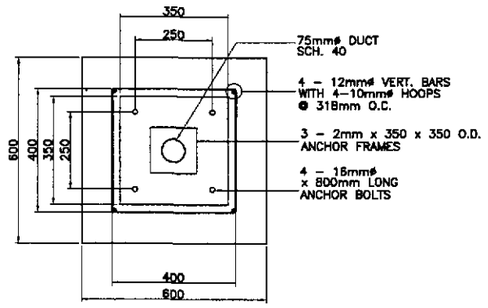

SECTION THRU A OF TYPE D

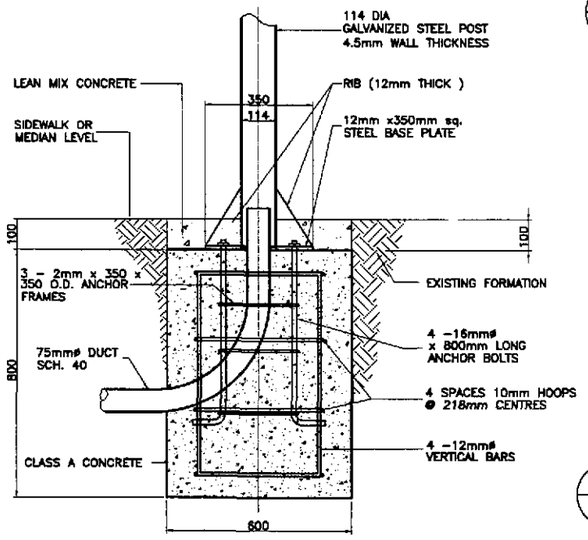

SECTION THROUGH FOUNDATION
(4.1 SIGNAL POST)

PEDESTRIAN SIGNAL POST FOUNDATION (TYPE D)

3 / RS-21 SCALE 1:10

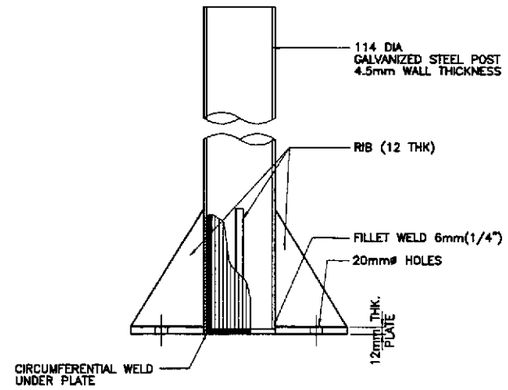

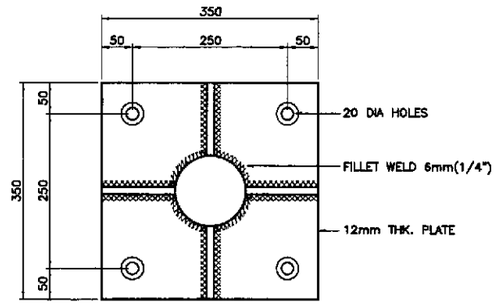

POST AND BASE PLATE

5 / RS-21 SCALE 1:5

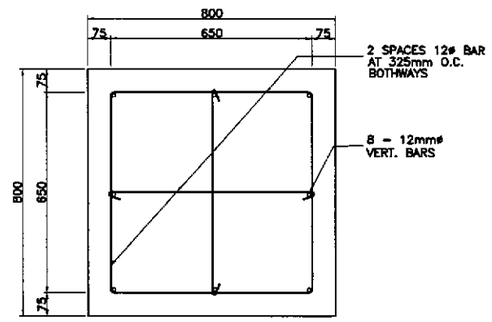

TYPICAL BOTTOM SECTION OF FOOTING - TYPE C

4 / RS-21 SCALE 1:10

NOTES:
1. ALL DIMENSIONS ARE IN MILLIMETERS UNLESS OTHERWISE SPECIFIED.
2. POST AND FOUNDATION DESIGN BASED ON TRAFFIC ENGINEERING CENTER DRAWING NO. 1033.

JICA
JAPAN INTERNATIONAL COOPERATION AGENCY
KATAHIRA & ENGINEERS INTERNATIONAL
YACHIYO ENGINEERING CO., LTD.

	DATE	SIGNATURE
DESIGNED	9/21/02	J. CATBAGAN
CHECKED	9/23/02	S. GOSE
SUBMITTED	10/14/02	TEAM LEADER

REPUBLIC OF THE PHILIPPINES
DEPARTMENT OF PUBLIC WORKS AND HIGHWAYS

PJHL – PMO	BUREAU OF DESIGN		OFFICE OF THE SECRETARY	
Submitted By:	Reviewed By:	Recommended By:	Recommended By: (See cover sheet for Signature)	Approved By: (See cover sheet for Signature/Approval)
DANILO C. TRAJANO	JOSEFINA M. ALAGAR	GILBERTO S. REYES	MANUEL M. BONOAN	SIMEON A. DATUMANONG
Project Director	Chief, Highways Division	OIC, Director IV	Undersecretary	Secretary

PROJECT AND LOCATION :	SCALE :	SHEET CONTENTS :	SHEET NO. :
THE DETAILED DESIGN STUDY ON UPGRADING INTER-URBAN HIGHWAY SYSTEM ALONG THE PAN-PHILIPPINE HIGHWAY (Plaridel, Cabanatuan and San Jose Bypasses) PLARIDEL BYPASS - CONTRACT PACKAGE III	AS SHOWN FULL SIZE A1	TRAFFIC SIGNAL POST TYPE B, C & D FOUNDATION DETAILS	RS-21

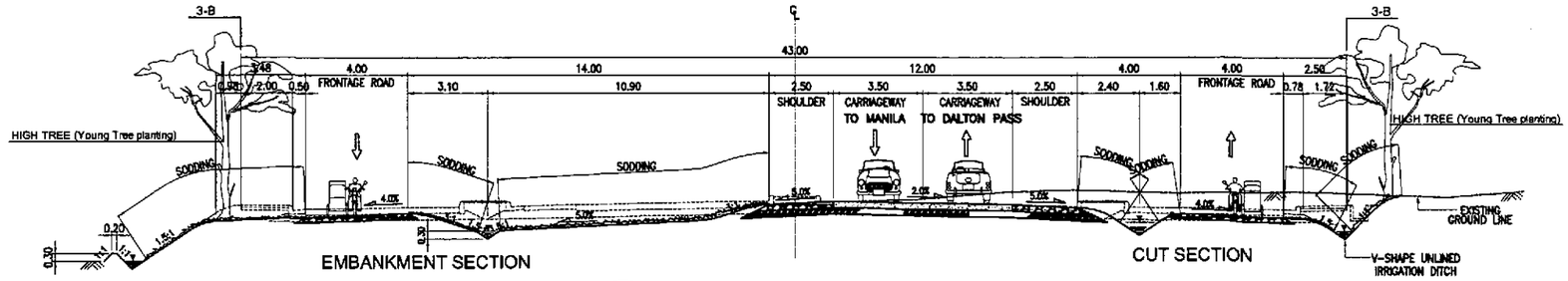

2 RS-22 GENERAL PLANTING LOCATION
SCALE 1:120

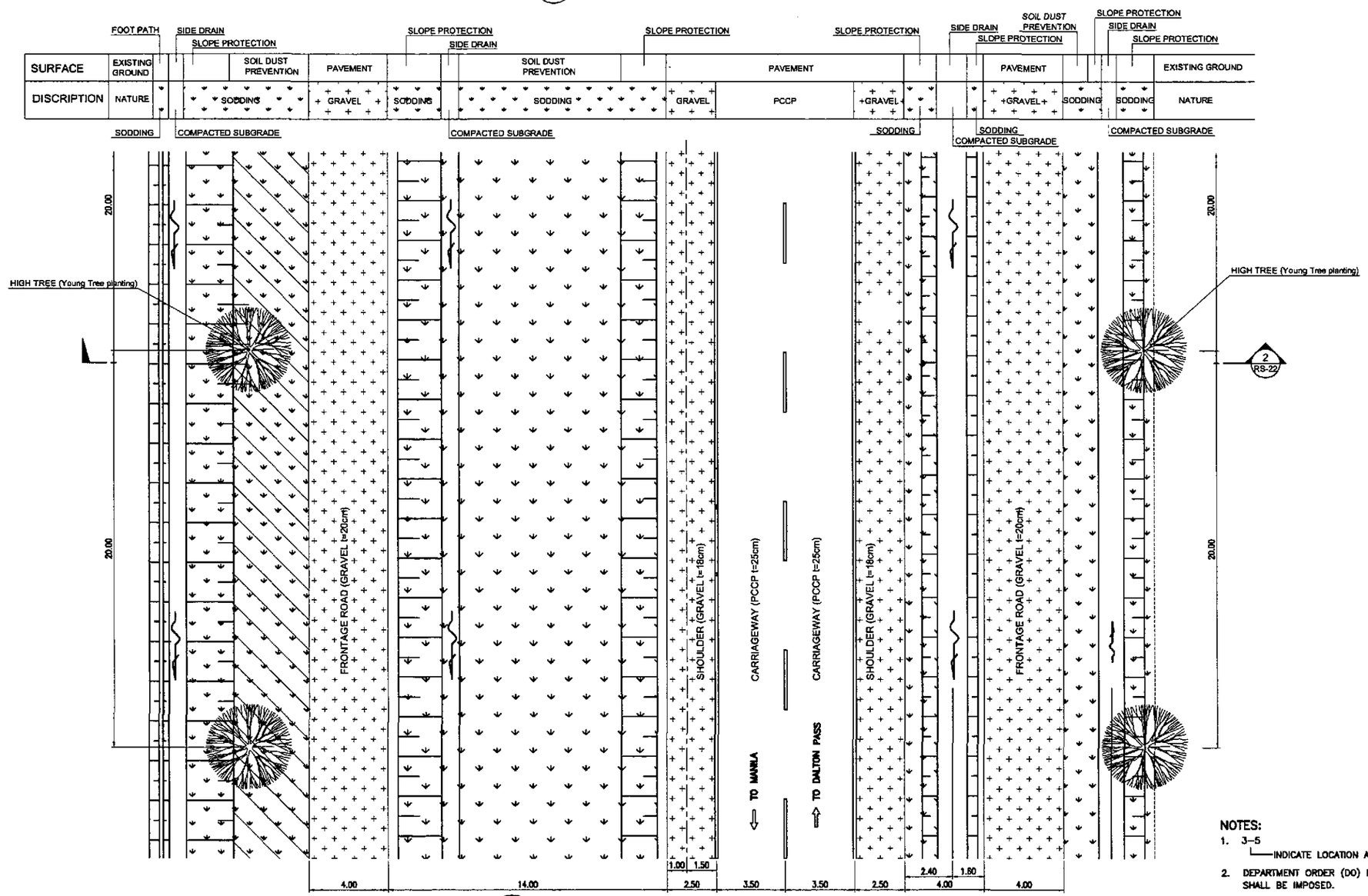

1 RS-22 TYPICAL PLANTING LAYOUT
SCALE 1:120

NOTES:

1. 3–5
   └─INDICATE LOCATION AS SPECIFIED IN THE PLANTING LAYOUT.
2. DEPARTMENT ORDER (DO) NO.15, S 2000 AND ITS REQUIREMENTS SHALL BE IMPOSED.

JICA
JAPAN INTERNATIONAL COOPERATION AGENCY
KEI KATAHIRA & ENGINEERS INTERNATIONAL
YEC YACHIYO ENGINEERING CO., LTD.

	DATE	SIGNATURE
DESIGNED	9/21/02	S. LUNA
CHECKED	9/23/02	S. JOSE
SUBMITTED	10/24/02	M. [illegible] TEAM LEADER

REPUBLIC OF THE PHILIPPINES
DEPARTMENT OF PUBLIC WORKS AND HIGHWAYS

FUHL – PMO	BUREAU OF DESIGN		OFFICE OF THE SECRETARY	
Submitted By:	Reviewed By:	Recommended By:	Recommended By: (See cover sheet for Signature)	Approved By: (See cover sheet for Signature/Approval)
DANILO C. TRAJANO	JOSEFINA M. ALAGAR	GILBERTO S. REYES	MANUEL M. BONOAN	SIMEON A. DATUMANONG
Project Director	Chief, Highways Division	OIC, Director IV	Undersecretary	Secretary

PROJECT AND LOCATION :
THE DETAILED DESIGN STUDY ON UPGRADING INTER-URBAN HIGHWAY SYSTEM ALONG THE PAN-PHILIPPINE HIGHWAY (Plaridel, Cabanatuan and San Jose Bypasses)
PLARIDEL BYPASS - CONTRACT PACKAGE III

SCALE : AS SHOWN
FULL SIZE A1

SHEET CONTENTS :
TYPICAL PLANTING LAYOUT
WITH FRONTAGE ROAD
(INITIAL STAGE)
Sheet 1 of 2

SHEET NO. : RS-22

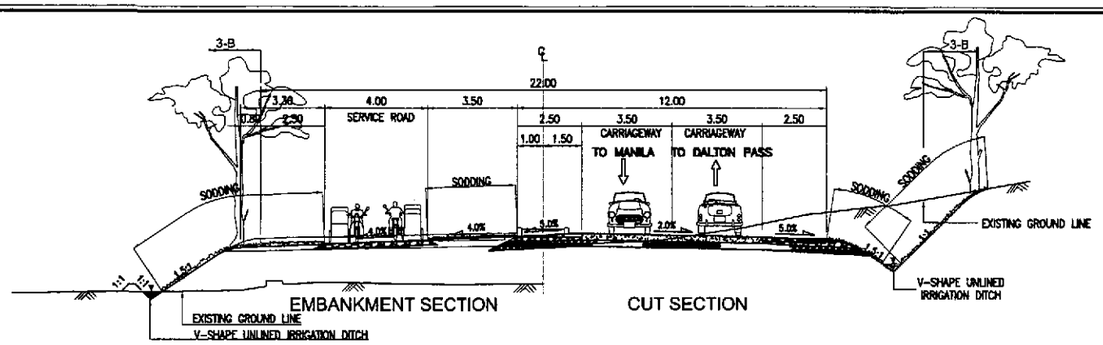

2 RS-23 GENERAL PLANTING LOCATION
SCALE 1:120

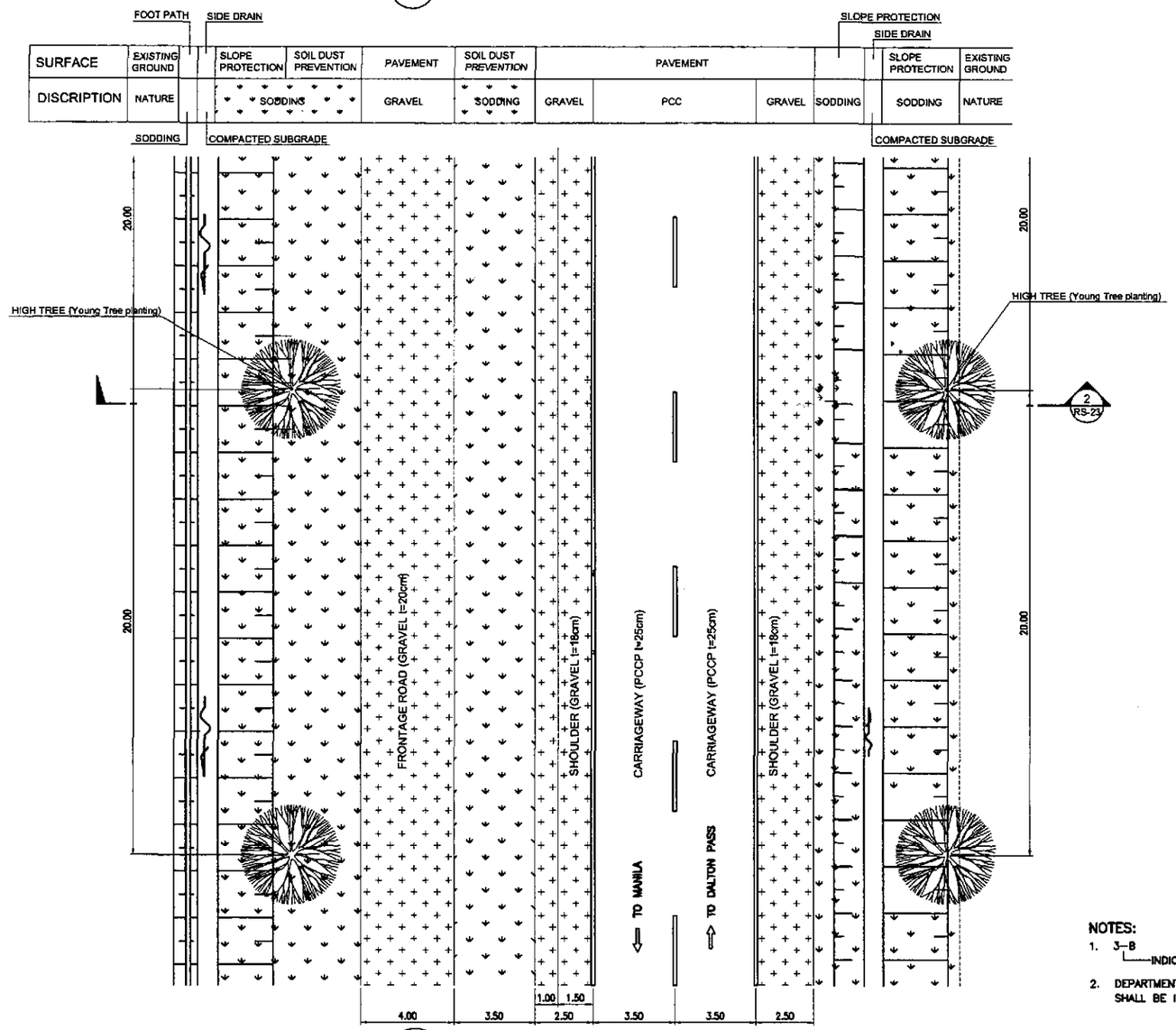

1 RS-23 TYPICAL PLANTING LAYOUT
SCALE 1:120

NOTES:

1. 3-B
   └──INDICATE LOCATION AS SPECIFIED IN THE PLANTING LAYOUT.
2. DEPARTMENT ORDER (DO) NO.15, S 2000 AND ITS REQUIREMENTS SHALL BE IMPOSED.

JICA
JAPAN INTERNATIONAL COOPERATION AGENCY
KEI KATAHIRA & ENGINEERS INTERNATIONAL
YEC YACHIYO ENGINEERING CO., LTD.

	DATE	SIGNATURE
DESIGNED	9/21/02	S. LUNA
CHECKED	9/23/02	E. GOSE
SUBMITTED	10/18/02	TEAM LEADER

REPUBLIC OF THE PHILIPPINES
DEPARTMENT OF PUBLIC WORKS AND HIGHWAYS

PJHL ~ PMO	BUREAU OF DESIGN		OFFICE OF THE SECRETARY	
Submitted By:	Reviewed By:	Recommended By:	Recommended By: (See cover sheet for Signature)	Approved By: (See cover sheet for Signature/Approval)
DANILO C. TRAJANO	JOSEFINA M. ALAGAR	GILBERTO S. REYES	MANUEL M. BONOAN	SIMEON A. DATUMANDNG
Project Director	Chief, Highways Division	DIC, Director IV	Undersecretary	Secretary

PROJECT AND LOCATION :
THE DETAILED DESIGN STUDY ON UPGRADING INTER-URBAN HIGHWAY SYSTEM ALONG THE PAN-PHILIPPINE HIGHWAY (Plaridel, Cabanatuan and San Jose Bypasses)
PLARIDEL BYPASS - CONTRACT PACKAGE III

SCALE : AS SHOWN
FULL SIZE A1

SHEET CONTENTS :
TYPICAL PLANTING LAYOUT
WITHOUT FRONTAGE ROAD
(INITIAL STAGE)

SHEET NO. : RS-23

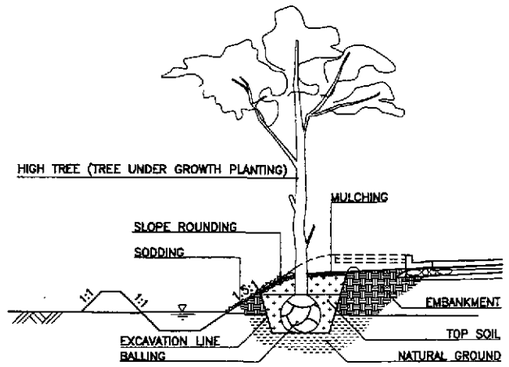

A SECTION

EMBANKMENT SECTION

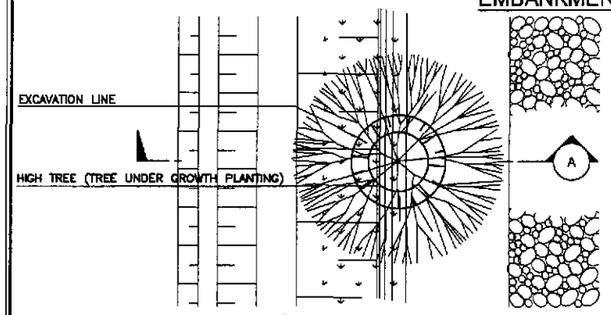

PLAN OF ROAD SIDE PLANTATION (OUTSIDE EMBANKMENT SECTION)

1 RS-24 NOT TO SCALE

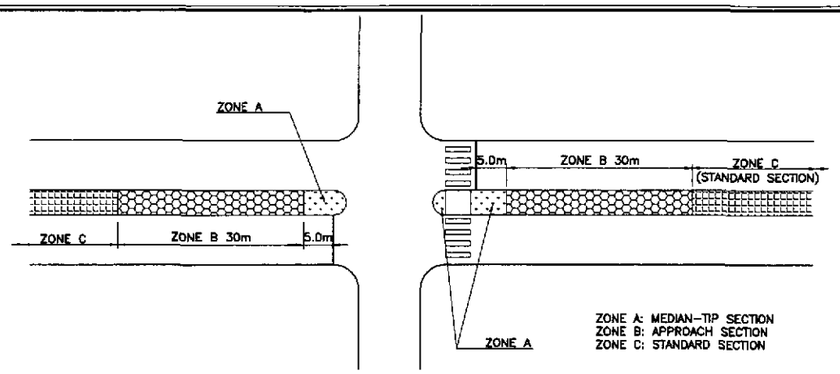

DISTRICT CHART OF PLANTING ARRANGEMENT IN THE MEDIAN

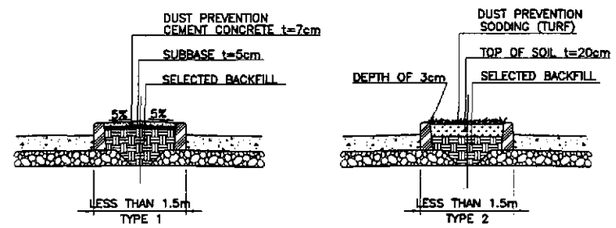

MEDIAN OF LESS THAN 1.5M

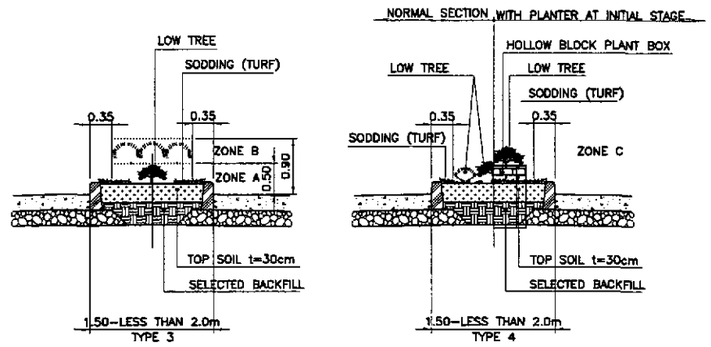

MEDIAN OF 1.5 - LESS THAN 2.0M

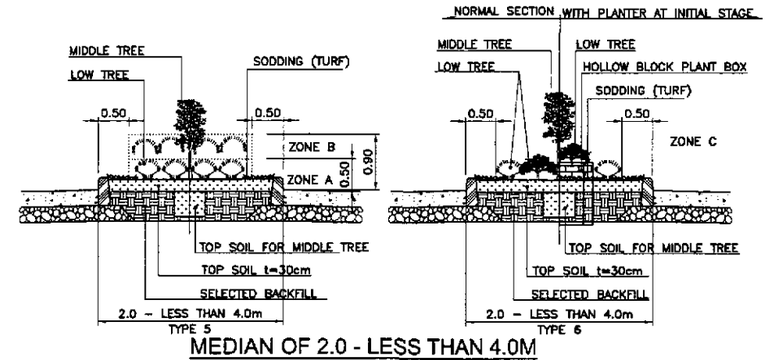

MEDIAN OF 2.0 - LESS THAN 4.0M

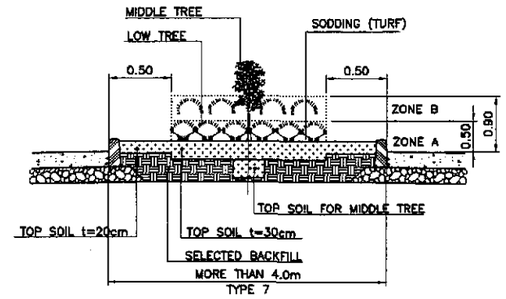

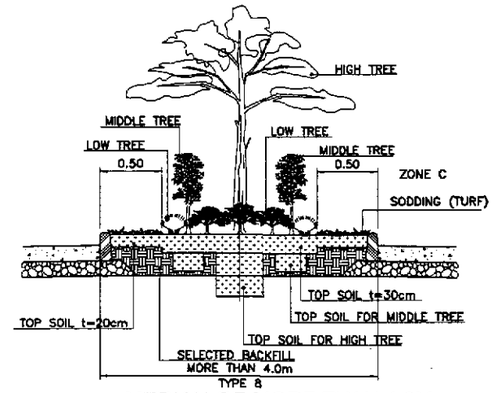

MEDIAN OF MORE THAN 4.0M

TYPES OF PLANTING FORMS ACCORDING TO MEDIAN/OUTER SEPARATION WIDTH

3 RS-24 NOT TO SCALE

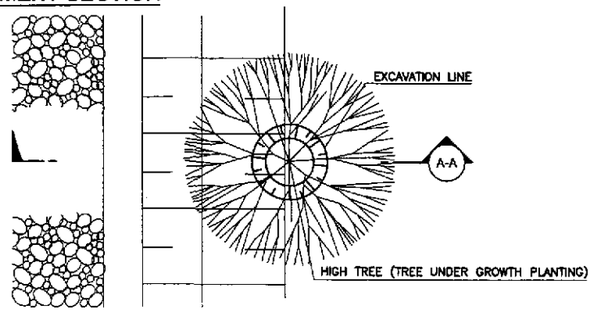

PLAN OF ROAD SIDE PLANTATION (OUTSIDE EMBANKMENT SECTION)

2 RS-24 NOT TO SCALE

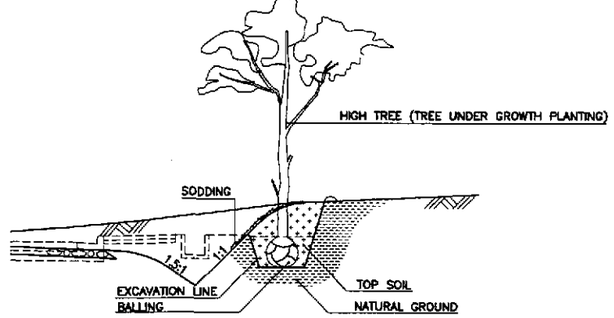

A - A SECTION

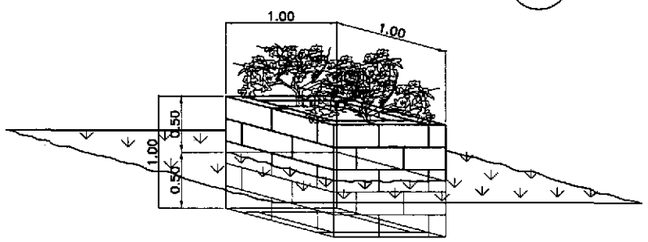

ISOMETRIC VIEW OF HOLLOW BLOCK PLANT BOX

4 RS-24 NOT TO SCALE

JICA
JAPAN INTERNATIONAL COOPERATION AGENCY
KATAHIRA & ENGINEERS INTERNATIONAL
YACHIYO ENGINEERING CO., LTD.

REPUBLIC OF THE PHILIPPINES
DEPARTMENT OF PUBLIC WORKS AND HIGHWAYS

	DATE	SIGNATURE	PJHL – PMO	BUREAU OF DESIGN		OFFICE OF THE SECRETARY	
DESIGNED	9/21/02	E. LUNA					
CHECKED	9/23/02	S. ROSE	Submitted By:	Reviewed By:	Recommended By:	Recommended By: (See cover sheet for Signature)	Approved By: (See cover sheet for Signature/Approval)
SUBMITTED	10/14/02	M. KAWAMURA TEAM LEADER	DANILO C. TRAJANO Project Director	JOSEFINA M. ALAGAR Chief, Highways Division	GILBERTO S. REYES OIC, Director IV	MANUEL M. BONGAN Undersecretary	SIMEON A. DATUMANONG Secretary

PROJECT AND LOCATION :	SCALE :	SHEET CONTENTS :	SHEET NO. :
THE DETAILED DESIGN STUDY ON UPGRADING INTER-URBAN HIGHWAY SYSTEM ALONG THE PAN-PHILIPPINE HIGHWAY (Plaridel, Cabanatuan and San Jose Bypasses)	NOT TO SCALE	TYPES OF PLANTING FORMS AND OTHER DETAILS (INITIAL STAGE)	RS-24
PLARIDEL BYPASS - CONTRACT PACKAGE III	FULL SIZE A1		

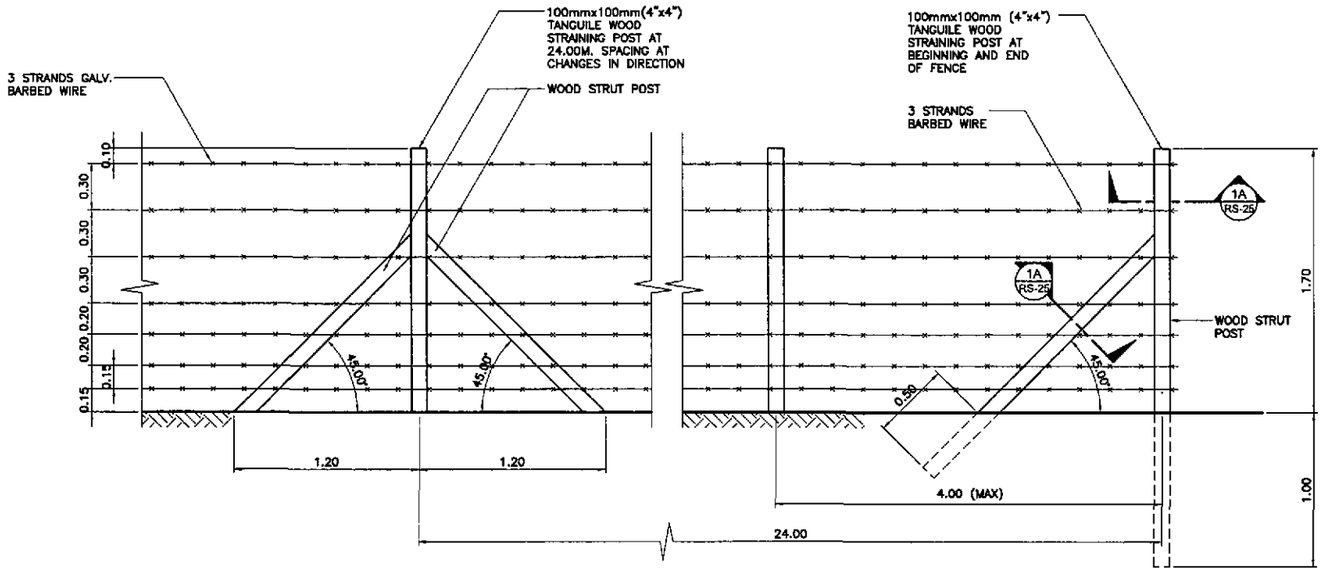

1 RS-25 FENCE TYPE - I (BARBED WIRE FENCE) INSTALLATION FOR WOOD FENCES
SCALE 1:20

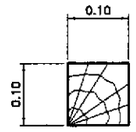

1A RS-25 WOOD SECTION
SCALE 1:5

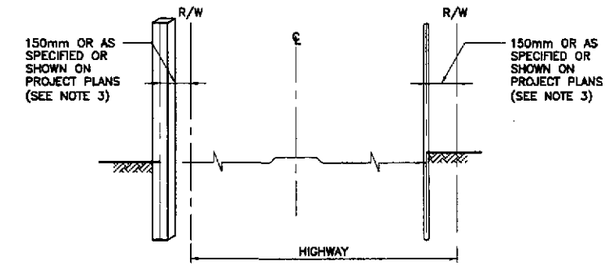

2A RS-25 OTHER HIGHWAYS
SCALE 1:30

2B RS-25 FREEWAYS
SCALE 1:30

2 RS-25 FENCE LOCATION
SCALE 1:30

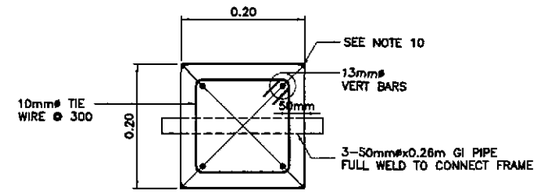

5 RS-25 CONCRETE POST SECTION
SCALE 1:5

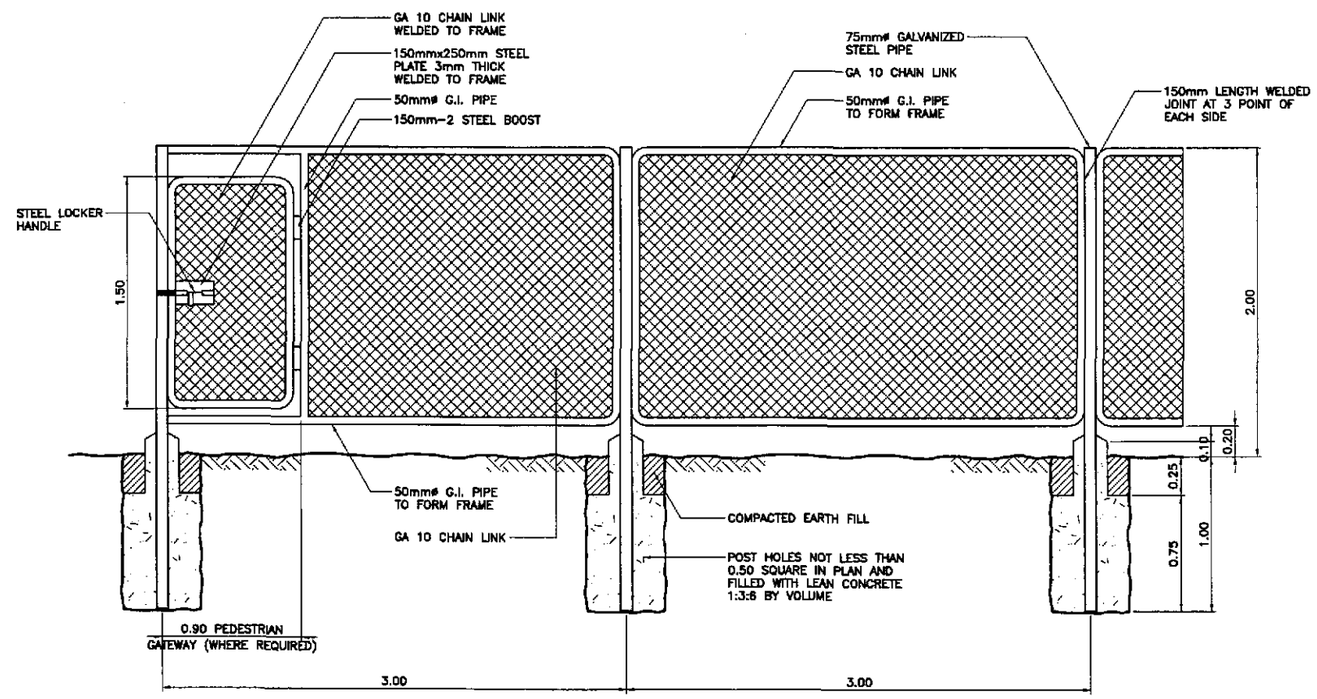

3 RS-25 FENCE TYPE - II (CHAIN LINK FENCE) FOR EITHER STEEL OR CONCRETE POST FENCES
SCALE 1:20

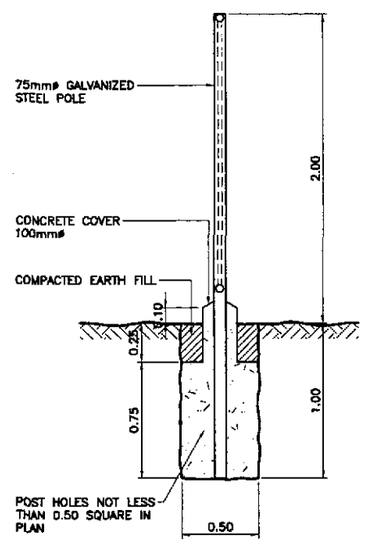

4 RS-25 SIDE VIEW
SCALE 1:20

NOTES:

1. MATERIALS AND WORKMANSHIP SHALL CONFORM TO THE REQUIREMENTS OF THE GENERAL SPECIFICATIONS
2. CONSTRUCTION LOCATION OF FENCES ARE SHOWN ON LAYOUT PLAN OR AS DIRECTED BY THE ENGINEER.
3. OFFSET TO BE 0.5m AT MONUMENT LOCATIONS. MEASURED AT RIGHT ANGLES TO R/W LINES. TAPER TO ACHIEVE OFFSET TO BE AT LEAST 6m LONG.
4. STRAINED BARBED WIRE SHALL BE GALVANIZED AS SPECIFIED BY IN ITEM 711
5. 50mmø AND 75mmø STEEL PIPE SHALL BE GALVANIZED.
6. THE COST OF FENCE TYPE I SHALL INCLUDE THE COST OF WOOD/RC STRUT POST AND ITS FOUNDATION.
7. THE COST OF FENCE TYPE II SHALL INCLUDE THE COST OF 0.90x1.50 EXIT-ENTRANCE OF FENCE GATE, INSTALLATION EQUIPMENT AND ITS FOUNDATION.
8. LOCATION OF EXIT-ENTRANCE OF FENCE GATE TYPE II SHALL BE AS DIRECTED BY THE PROJECT ENGINEER.
9. CONCRETE FOUNDATION OF STEEL POST TO BE CLASS "C".
10. CONCRETE POST SHALL BE CLASS "A" CONCRETE. RUBBER FINISH OR CASTED IN SMOOTH SURFACE FORMS WITH EXPOSED CORNERS ROUNDED OR CHAMPERED 12mm.
11. CONCRETE POST REINFORCING STEEL EXCEPT THE WIRES SHALL BE DEFORMED STEEL BARS OF INTERMEDIATE GRADE.
12. WOOD POSTS FENCES SHALL CONFORM AS SPECIFIED IN ITEM 711 OF STANDARD SPECIFICATIONS FOR HIGHWAY AND BRIDGES.
13. MATERIAL FOR CHAIN LINK FENCE POST ARE SUBJECT TO CHANGE TO SUIT FIELD CONDITIONS. CHANGES SHALL BE PREPARED BY CONTRACTOR AND SHALL BE APPROVED BY THE ENGINEER.
14. ALL DIMENSIONS ARE IN METERS UNLESS OTHERWISE INDICATED.

JICA
JAPAN INTERNATIONAL COOPERATION AGENCY
KATAHIRA & ENGINEERS INTERNATIONAL
YACHIYO ENGINEERING CO., LTD.

	DATE	SIGNATURE
DESIGNED	9/21/02	A. ADACIO
CHECKED	9/23/02	S. CRUZ
SUBMITTED	10/14/02	TEAM LEADER

REPUBLIC OF THE PHILIPPINES
DEPARTMENT OF PUBLIC WORKS AND HIGHWAYS

PJHL - PMO	BUREAU OF DESIGN		OFFICE OF THE SECRETARY	
Submitted By:	Reviewed By:	Recommended By:	Recommended By: (See cover sheet for Signature)	Approved By: (See cover sheet for Signature/Approval)
DANILO C. TRAJANO	JOSEFINA M. ALAGAR	GILBERTO S. REYES	MANUEL M. BONDAN	SIMEON A. DATUMANONG
Project Director	Chief, Highways Division	OIC, Director IV	Undersecretary	Secretary

PROJECT AND LOCATION :
THE DETAILED DESIGN STUDY ON UPGRADING INTER-URBAN HIGHWAY SYSTEM ALONG THE PAN-PHILIPPINE HIGHWAY (Plaridel, Cabanatuan and San Jose Bypasses)
PLARIDEL BYPASS - CONTRACT PACKAGE III

SCALE : AS SHOWN
FULL SIZE A1

SHEET CONTENTS : TYPICAL FENCING DETAILS

SHEET NO. : RS-25