MISCELLANEOUS DRAWINGS

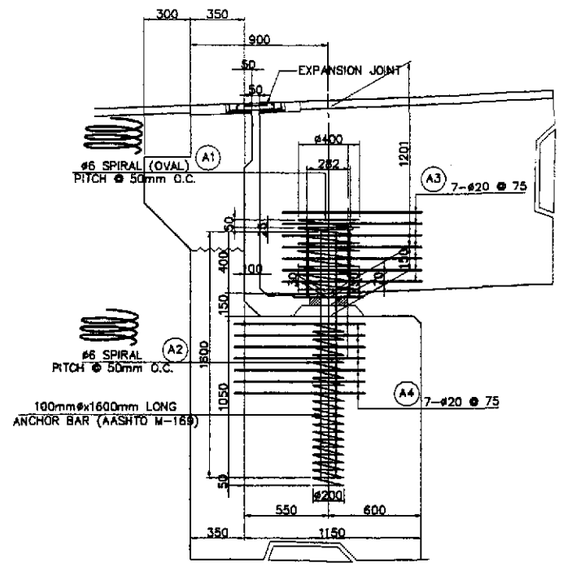

A1 LONG'L ELEVATION
SCALE 1:20

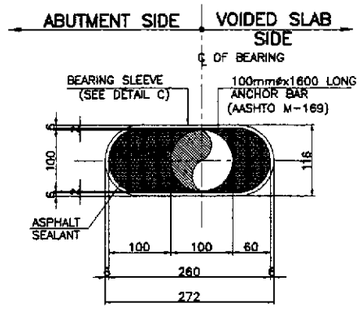

B SECTION
SCALE 1:5

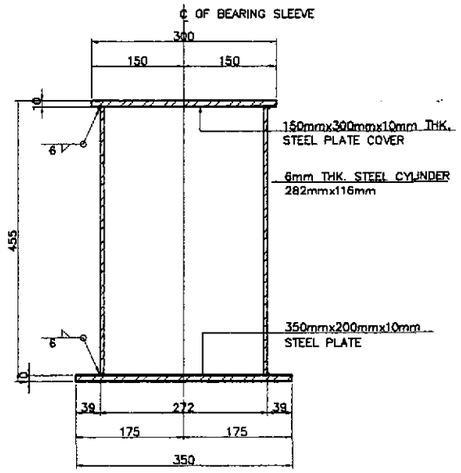

C2 ELEVATION
SCALE 1:5

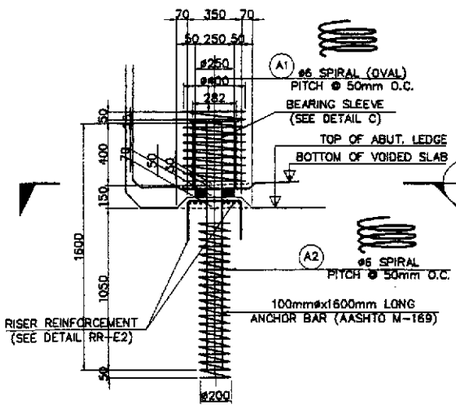

A2 LONG'L ELEVATION
SCALE 1:20

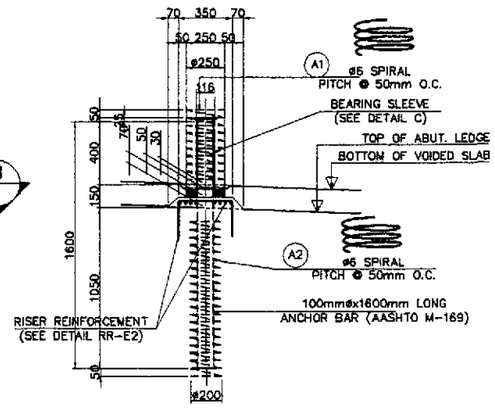

A3 TRAN'L ELEVATION
SCALE 1:20

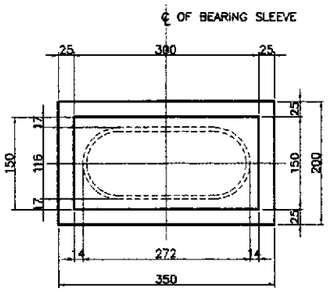

C1 P L A N
SCALE 1:5

C ANCHOR BAR SLEEVE DETAILS
SCALE AS SHOWN

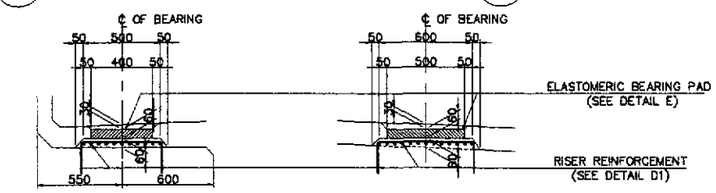

A4 LONG'L SECTION
SCALE 1:20

A5 TRAN'L SECTION
SCALE 1:20

A MISC. DETAILS FOR ABUTMENT
SCALE AS SHOWN

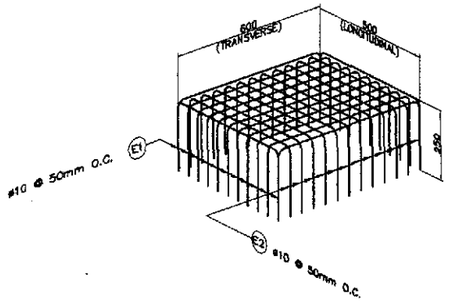

D1 RISER REINF. @ BEARING
SCALE 1:5

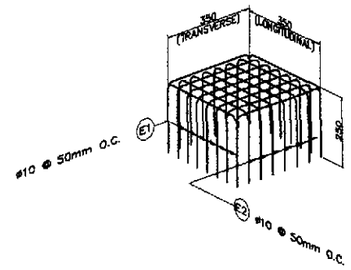

D2 RISER REINF. @ DOWEL
SCALE 1:5

D RISER REINFORCEMENT DETAIL
SCALE TO SCALE

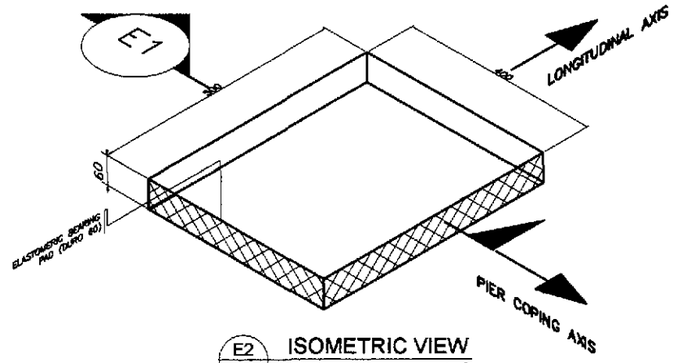

E2 ISOMETRIC VIEW
SCALE 1:5

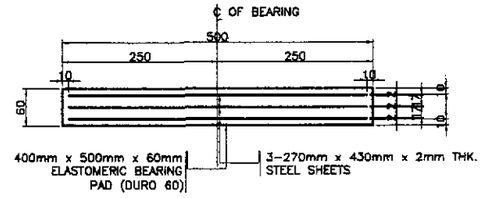

E1 SECTION
SCALE 1:5

E ELASTOMERIC BEARING PAD DETAILS
SCALE AS SHOWN

NOTE : ANCHOR BAR ANDANCHOR SLEEVE SHALL BE HOT-DIPPED GALVANIZED.

BAR BENDING DIAGRAM

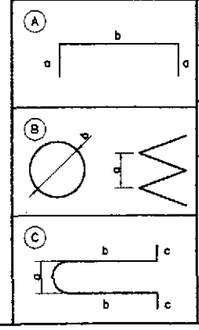

SCHEDULE OF REINFORCEMENT

LOCATION	BAR MARK	SIZE (mm)	BEND TYPE	DIMENSION(mm) OUT TO OUT a	b	c	d	e	LENGTH (mm)	NO. REQ'D.	UNIT WEIGHT (kg/m)	WEIGHT(kgs.) Grade 40
RISER (BEARING PAD)	E1	10	A	250	650				1150	33	0.617	22
	E2	10	A	250	500				1000	39	0.617	24
											SUB TOTAL =	46
RISER (DOWEL BAR)	E1	10	A	250	350				850	32	0.617	17
	E2	10	A	250	350				850	32	0.617	17
											SUB TOTAL =	34
SPIRAL (ANCHOR BAR)	A1	6	B	50	400				11550	4	0.222	10
	A2	6	B	50	200				12806	4	0.222	11
	A3	20	C	300	795				2365	28	2.466	164
	A4	20	C	300	720				2215	28	2.466	153
											SUB TOTAL =	338
											TOTAL/ABUT. =	418
											TOTAL/2 ABUTS. =	836

THE REINFORCEMENT SHOWN ON THIS TABLE IS FOR REFERENCE ONLY. THE CONTRACTOR SHOULD CHECK AND VERIFY ALL DIMENSIONS, SIZES AND QUANTITIES OF REINFORCEMENT.

JICA
JAPAN INTERNATIONAL COOPERATION AGENCY
KATAHIRA & ENGINEERS INTERNATIONAL
YACHIYO ENGINEERING CO., LTD.

	DATE	SIGNATURE
DESIGNED	9/16/02	F. P. DE JESUS
CHECKED	9/18/02	J. C. SANTOS
SUBMITTED	9/20/02	M. MALICDEM TEAM LEADER

REPUBLIC OF THE PHILIPPINES
DEPARTMENT OF PUBLIC WORKS AND HIGHWAYS

FUHL - PMO	BUREAU OF DESIGN		OFFICE OF THE SECRETARY	
Submitted By:	Reviewed By:	Recommended By:	Recommended By: (See cover sheet for Signature)	Approved By: (See cover sheet for Signature/Approval)
DANILO C. TRAJANO	ADRIANO M. DOROY	GILBERTO S. REYES	MANUEL M. BONGAN	SIMEON A. DATUMANONG
Project Director	Chief, Bridges Division	Director IV (OIC)	Undersecretary	Secretary

PROJECT AND LOCATION :
THE DETAILED DESIGN STUDY ON UPGRADING INTER-URBAN HIGHWAY SYSTEM ALONG THE PAN-PHILIPPINE HIGHWAY (Plaridel, Cabanatuan and San Jose Bypasses)
PLARIDEL BYPASS - CONTRACT PACKAGE I

SCALE : AS SHOWN
FULL SIZE A1

SHEET CONTENTS :
INTERCHANGE RAMP
BEARING AND ANCHOR BAR DETAILS

SHEET NO. : RB-71

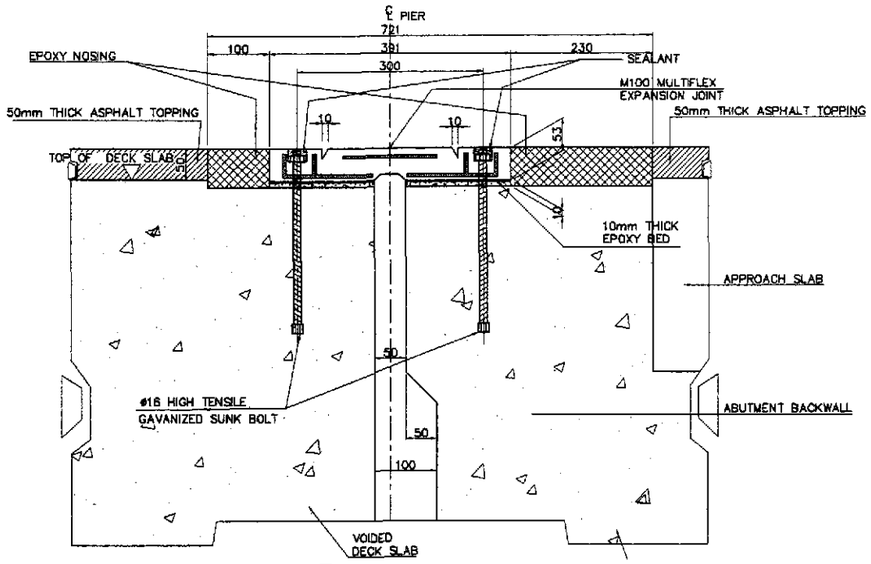

C SECTION
SCALE 1:5

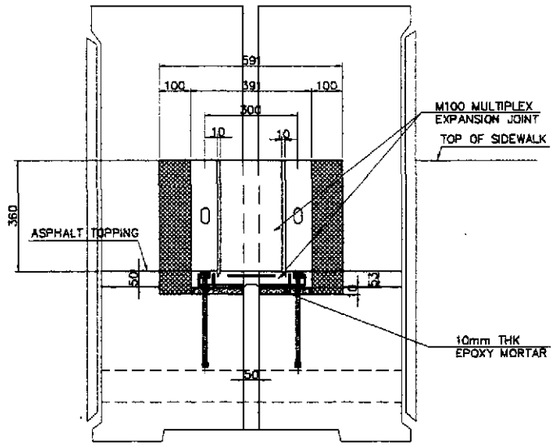

D SECTION
SCALE 1:10

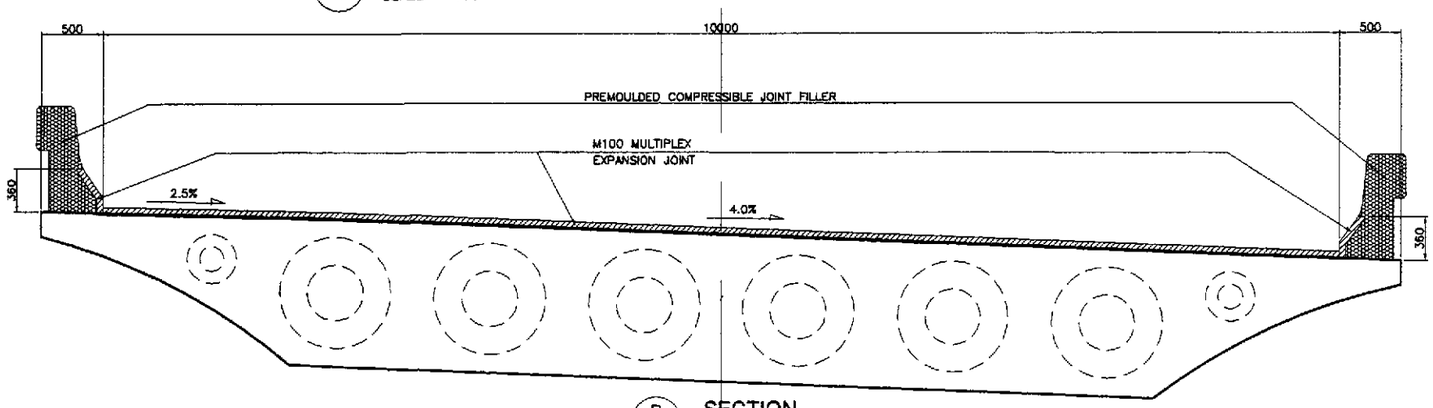

B SECTION
SCALE 1:25

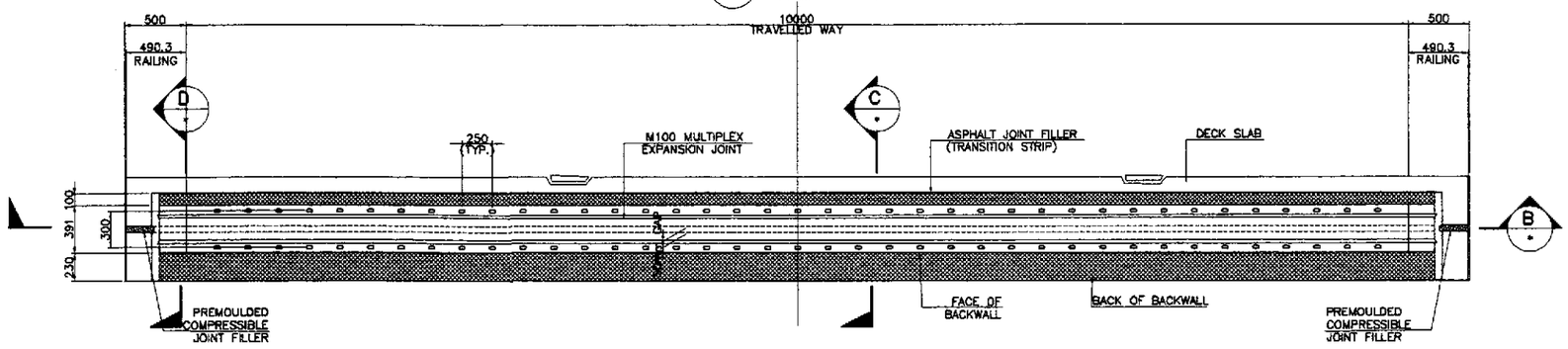

A PLAN
SCALE 1:25

1 EXPANSION JOINT DETAILS
SCALE AS SHOWN

SCHEDULE OF EXPANSION JOINT			
LOCATION	EXPANSION JOINT TYPE	MOVEMENT (mm)	LENGTH (mm)
ABUT. A1	MULTIFLEX M100	± 50, TOTAL=100	11850
ABUT. A2	MULTIFLEX M100	± 50, TOTAL=100	11850

A.) QUALITY TESTING OF RUBBER COMPOUND

PROPERTIES	SPECIFICATION
HARDNESS (SHORE A)	50 ± 5
TENSILE STRENGTH (MPA)	13 MIN
ELONGATION AT BREAK (%)	400 MIN
COMPRESSION SET (AFTER 22h AT 70°C)	20% MAX
OZONE RESISTANCE (AFTER 72h AT 40°C, 20% STRAIN 100 pphm)	NO CRACK
OIL RESISTANCE IN ASTM NO. 3 OIL (168h AT 25°C. VOLUME CHANGE)	15% MAX

B.) DIMENSION CHECK ON METAL PLATES

DIMENSION	SPECIFICATION
LENGTH	± 1
WIDTH	0 TO −1.5 MIN
THICKNESS	± 0.5 MIN

C.) QUALITY CHECK

PROPERTY	SPECIFICATION
DIMENSION	ACCORDING TO PRODUCT DRAWING
SURFACE APPEARANCE	NO VISIBLE CRACK
RUBBER COVER HARDNESS (SHORE A)	50 ± 5

INSTALLATION MATERIALS

1. EPOXY BEDDING
2. EPOXY NOSING
3. BOLT / NUTS
4. SEALANT

NOTES :

1. THE EXPANSION JOINT SHALL BE MULTIPLEX M100 OR EQUIVALENT.
2. THE CONTRACTOR SHALL GUARANTEE WATERTIGHTNESS OF EXPANSION JOINTS INCLUDING SIDEWALK JOINTS.
3. THE EXPANSION JOINT SHALL HAVE A 15-YEAR WARRANTY PERIOD. DAMAGES ON THE JOINTS WITHIN THIS PERIOD SHALL BE REPLACED BY THE CONTRACTOR.
4. VERIFY ACTUAL DIMENSIONS OF EXPANSION JOINT BLOCK-OUT AS PER MANUFACTURER'S RECOMMENDATION.

JICA
JAPAN INTERNATIONAL COOPERATION AGENCY
KEI KATAHIRA & ENGINEERS INTERNATIONAL
YEC YACHIYO ENGINEERING CO., LTD.

	DATE	SIGNATURE
DESIGNED	9/16/02	J. P. DE JESUS
CHECKED	9/18/02	J. T. SANTOS
SUBMITTED	9/20/02	M. KURACHI, TEAM LEADER

REPUBLIC OF THE PHILIPPINES
DEPARTMENT OF PUBLIC WORKS AND HIGHWAYS

PJHL ~ PMO	BUREAU OF DESIGN		OFFICE OF THE SECRETARY	
Submitted By:	Reviewed By:	Recommended By:	Recommended By: (See cover sheet for Signature)	Approved By: (See cover sheet for Signature/Approval)
DANILO C. TRAJANO	ADRIANO N. DOROY	GILBERTO S. REYES	MANUEL M. BONOAN	SIMEON A. DATUMANONG
Project Director	Chief, Bridges Division	Director IV (OIC)	Undersecretary	Secretary

PROJECT AND LOCATION :
THE DETAILED DESIGN STUDY ON UPGRADING INTER-URBAN HIGHWAY SYSTEM ALONG THE PAN-PHILIPPINE HIGHWAY (Plaridel, Cabanatuan and San Jose Bypasses)
PLARIDEL BYPASS - CONTRACT PACKAGE I

SCALE : AS SHOWN
FULL SIZE A1

SHEET CONTENTS :
INTERCHANGE RAMP
EXPANSION JOINT DETAILS

SHEET NO. : RB-72

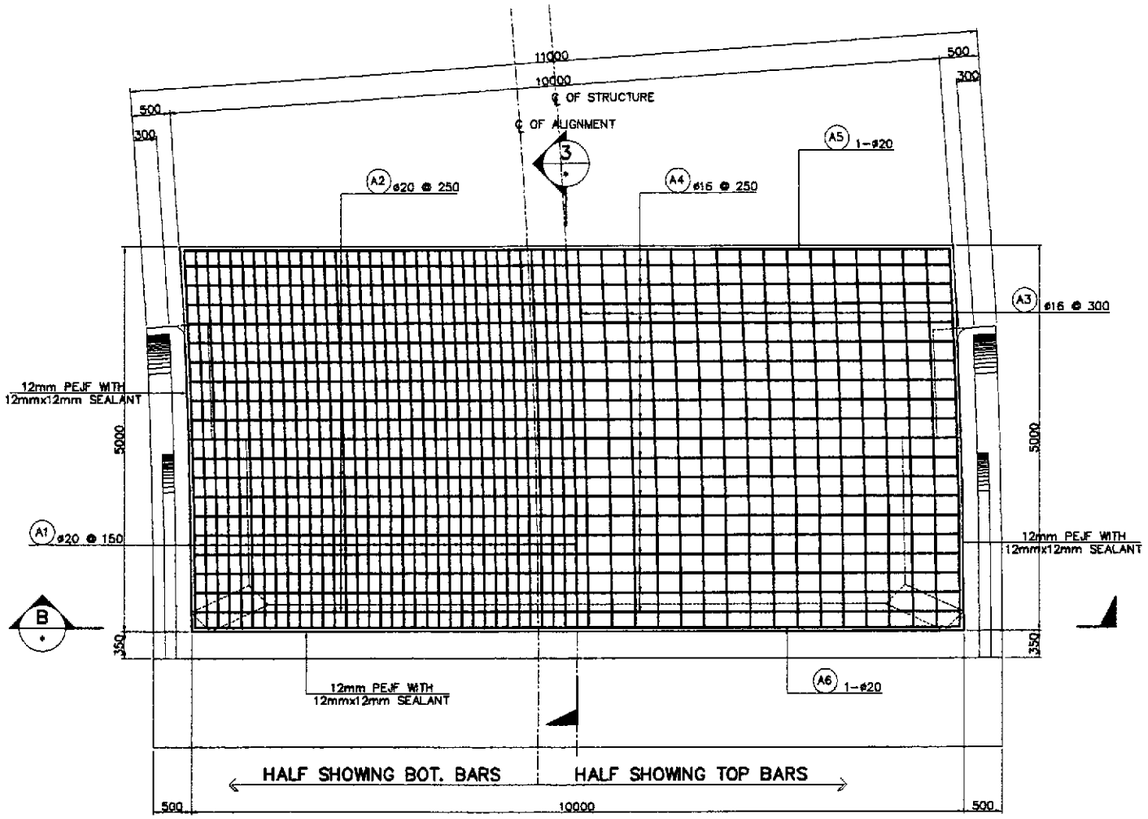

A PLAN
SCALE 1:40

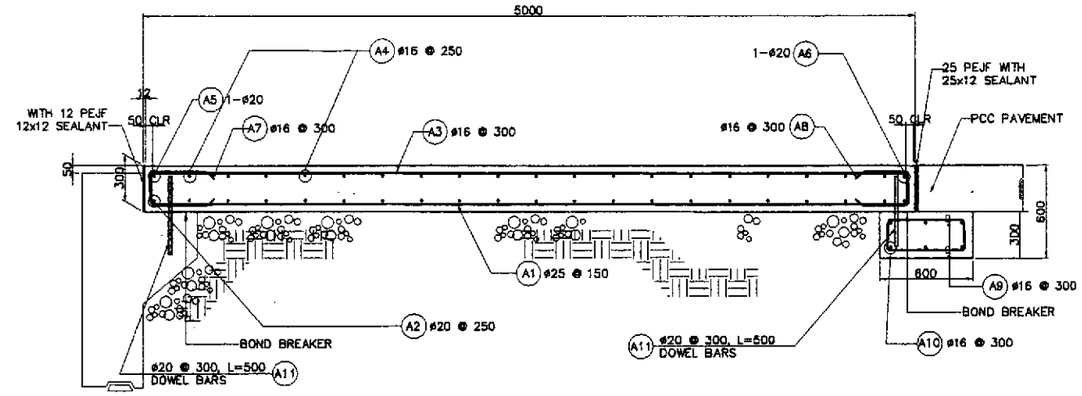

C SECTION
SCALE 1:20

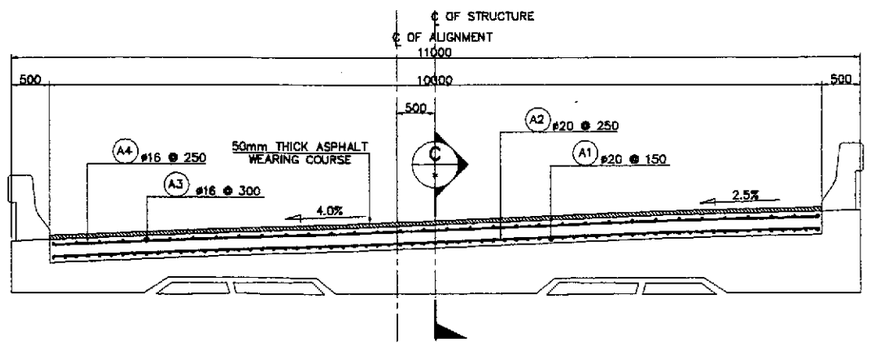

B SECTION
SCALE 1:40

BAR BENDING DIAGRAM

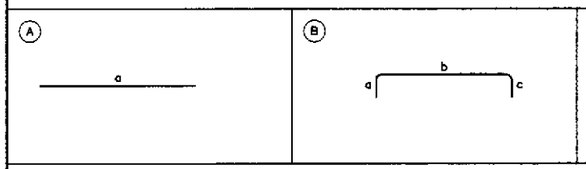

SCHEDULE OF REINFORCEMENT

LOCATION	BAR MARK	SIZE (mm)	BEND TYPE	DIMENSION(mm) OUT TO OUT a	b	c	d	e	f	LENGTH (mm)	NO. REQ'D.	UNIT WEIGHT (kg/m)	WEIGHT (Kgs.) GRADE 40	GRADE 60
APPROACH SLAB (ABUT. A1 & A2)	A1	25	A	4900						4900	67	3.853		1265
	A2	20	A	9900						9900	21	2.466		513
	A3	16	A	4900						4900	34	1.578	263	
	A4	16	A	9900						9900	19	1.578	297	
	A5	20	A	9900						9900	1	2.466		24
	A6	20	A	9900						9900	1	2.466		24
	A7	16	B	300	200	300				800	21	1.578	27	
	A8	16	B	300	200	300				800	21	1.578	27	
	A9	16	B	200	500	200				900	42	1.578	60	
	A10	16	A	9900						9900	6	1.578	94	
	A11	20	A	500						500	42	2.466		52
									TOTAL WEIGHT FOR 1 APPROACH =				768 kg.	1878 kg.
									TOTAL WEIGHT FOR 2 APPROACHES =				1,536 kg.	3,756 kg.

THE REINFORCEMENT SHOWN ON THIS TABLE IS FOR REFERENCE ONLY. THE CONTRACTOR SHOULD CHECK AND VERIFY ALL DIMENSIONS, SIZES AND QUANTITIES OF REINFORCEMENT.

1 APPROACH SLAB REINF. DETAILS (ABUT. A1 & A2)
SCALE AS SHOWN

JICA
JAPAN INTERNATIONAL COOPERATION AGENCY
KEI KATAHIRA & ENGINEERS INTERNATIONAL
YEC YACHIYO ENGINEERING CO., LTD.

	DATE	SIGNATURE
DESIGNED	9/16/02	F. P. DE JESUS
CHECKED	9/18/02	J. E. SANTOS
SUBMITTED	9/20/02	TEAM LEADER

REPUBLIC OF THE PHILIPPINES
DEPARTMENT OF PUBLIC WORKS AND HIGHWAYS

PJHL – PMO	BUREAU OF DESIGN		OFFICE OF THE SECRETARY	
Submitted By:	Reviewed By:	Recommended By:	Recommended By: (See cover sheet for Signature)	Approved By: (See cover sheet for Signature/Approval)
DANILO C. TRAJANO	ADRIANO M. DOROY	GILBERTO S. REYES	MANUEL M. BONDAN	SIMEON A. DATUMANONG
Project Director	Chief, Bridges Division	Director IV (OIC)	Undersecretary	Secretary

PROJECT AND LOCATION :
THE DETAILED DESIGN STUDY ON UPGRADING INTER-URBAN HIGHWAY SYSTEM ALONG THE PAN-PHILIPPINE HIGHWAY (Plaridel, Cabanatuan and San Jose Bypasses)
PLARIDEL BYPASS - CONTRACT PACKAGE I

SCALE : AS SHOWN
FULL SIZE A1

SHEET CONTENTS :
INTERCHANGE RAMP
APPROACH SLAB REINF. DETAILS (ABUTMENT A1 & A2)

SHEET NO. : RB-73

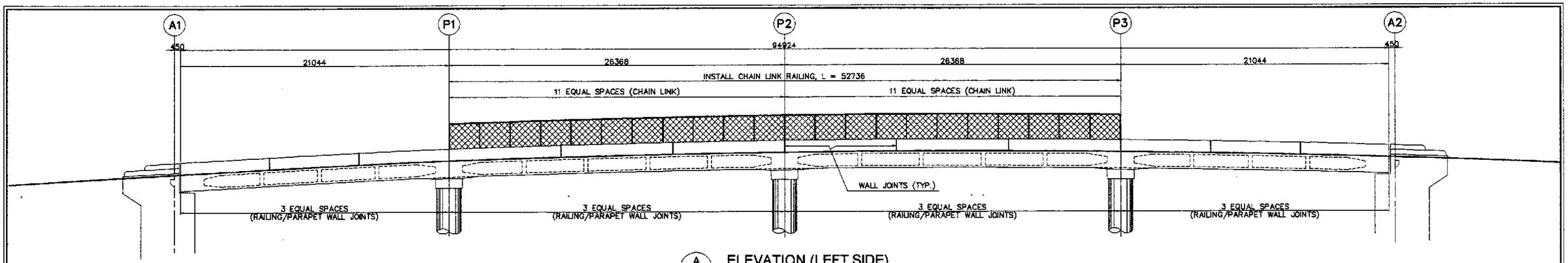

A ELEVATION (LEFT SIDE)
SCALE 1 : 150

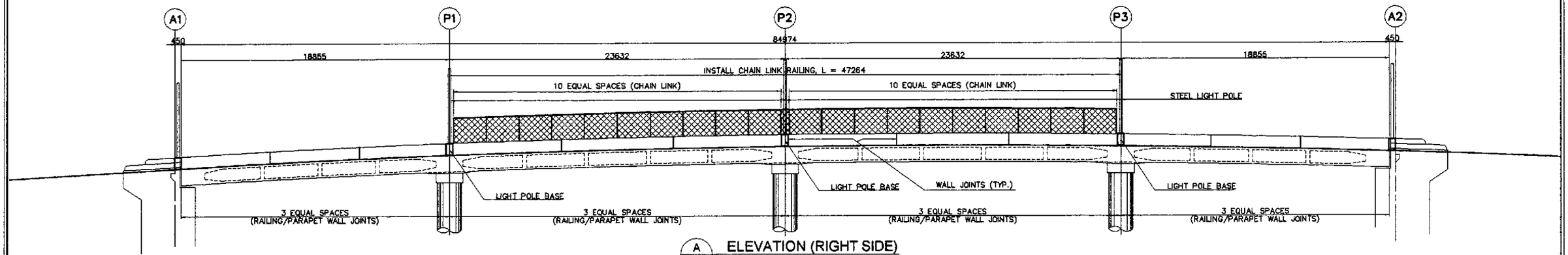

A ELEVATION (RIGHT SIDE)
SCALE 1 : 150

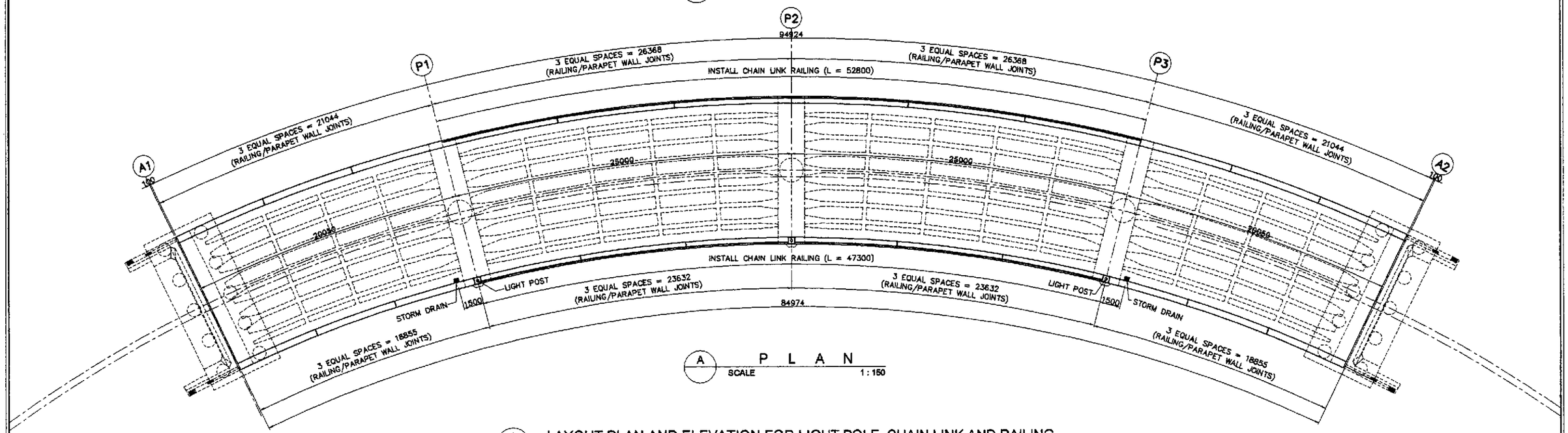

A P L A N
SCALE 1 : 150

* LAYOUT PLAN AND ELEVATION FOR LIGHT POLE, CHAIN LINK AND RAILING
SCALE AS SHOWN

		DATE	SIGNATURE
JICA JAPAN INTERNATIONAL COOPERATION AGENCY	DESIGNED	9/16/02	F. P. DE JESUS
KATAHIRA & ENGINEERS INTERNATIONAL / YACHIYO ENGINEERING CO., LTD.	CHECKED	9/18/02	J. C. SANTOS
	SUBMITTED	9/20/02	TEAM LEADER

REPUBLIC OF THE PHILIPPINES
DEPARTMENT OF PUBLIC WORKS AND HIGHWAYS

PJHL – PMO	BUREAU OF DESIGN		OFFICE OF THE SECRETARY	
Submitted By:	Reviewed By:	Recommended By:	Recommended By: (See cover sheet for Signature)	Approved By: (See cover sheet for Signature/Approval)
DANILO C. TRAJANO	ADRIANO M. DOROY	GILBERTO S. REYES	MANUEL M. BONOAN	SIMEON A. DATUMANONG
Project Director	Chief, Bridges Division	Director IV (OIC)	Undersecretary	Secretary

PROJECT AND LOCATION :	SCALE :	SHEET CONTENTS :	SHEET NO. :
THE DETAILED DESIGN STUDY ON UPGRADING INTER-URBAN HIGHWAY SYSTEM ALONG THE PAN-PHILIPPINE HIGHWAY (Plaridel, Cabanatuan and San Jose Bypasses)	AS SHOWN	INTERCHANGE RAMP LAYOUT PLAN & ELEV. FOR LIGHT POLE, CHAIN LINK AND RAILING	RB-74
PLARIDEL BYPASS - CONTRACT PACKAGE I	FULL SIZE A1		

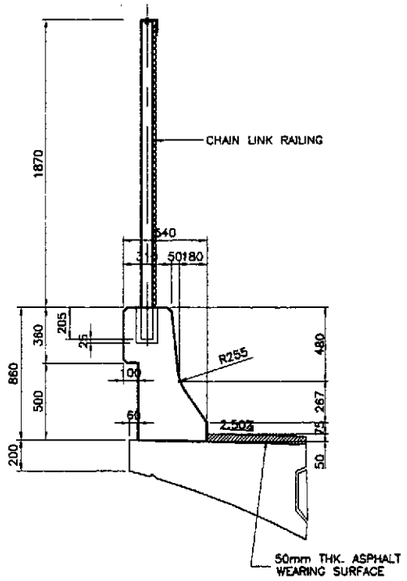

A ELEVATION
SCALE 1:20

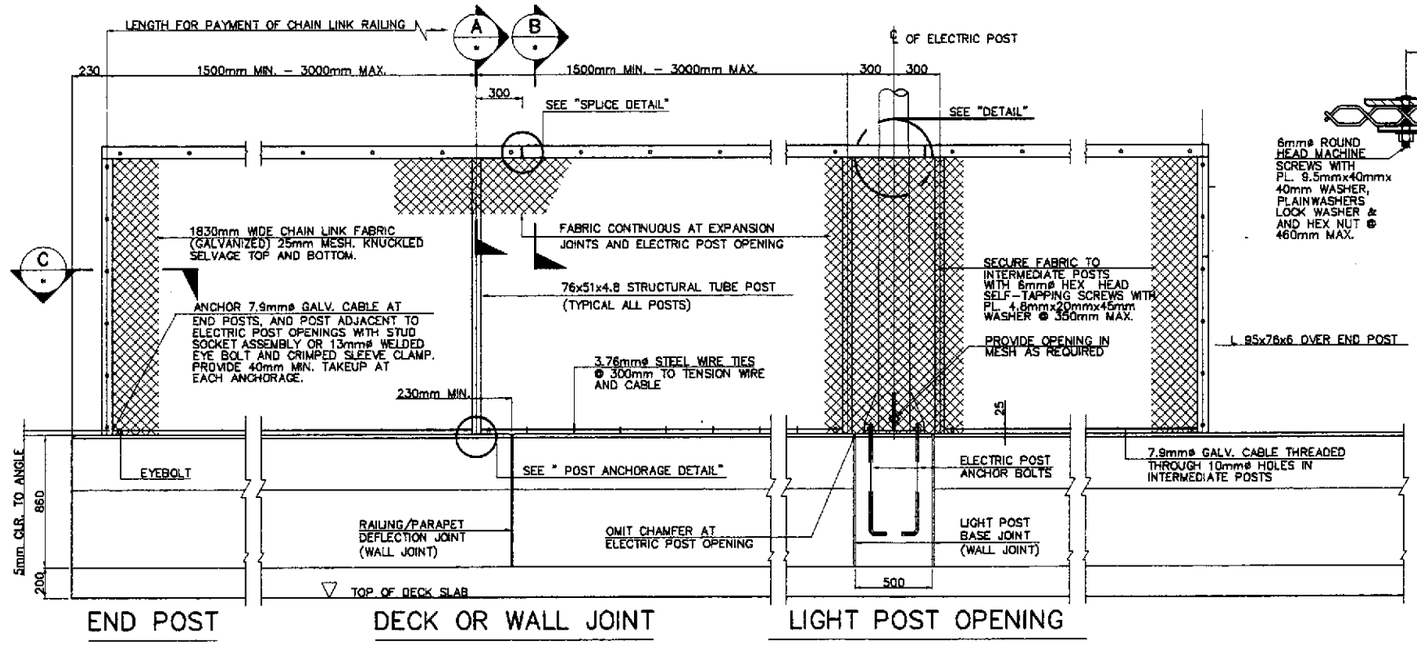

C ELEVATION

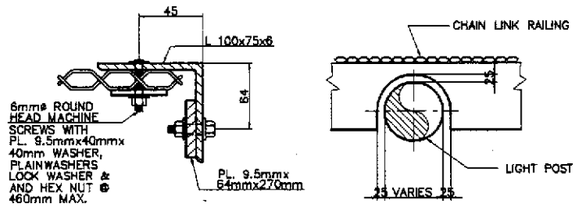

I DETAIL
SCALE NTS

NOTES:

1. RAILING ASSEMBLY EXCEPT CHAIN LINK FABRIC TO BE GALVANIZED AFTER FABRICATION.
2. POSTS SHALL BE VERTICAL.
3. RAILING SHALL CONFORM TO HORIZONTAL AND VERTICAL ALIGNMENT. WHEN RAILING IS PLACED ON A CURVED HORIZONTAL ALIGNMENT WITH RADIUS OF 45m OR LESS, THREAD THE 7.9mmø CABLE THOUGH 10mmø WELDED EYE RODS EMBEDDED 100mm INTO THE TOP OF THE CONCRETE PARAPET AND EQUALLY SPACED TO LIMIT THE MIDORDINATE DISTANCE BETWEEN THE 7.9mmø CABLE AND THE CURVE TO 25mm MAXIMUM. HORIZONTAL ANGLE SHALL BE BENT TO CONFORM TO HORIZONTAL ALIGNMENT IF RADIUS IS 45m OR LESS AND MAY BE ON 3m CHORDS IF RADIUS IS OVER 45m.
4. HORIZONTAL ANGLE SHALL BE CONTINUOUS OVER NOT LESS THAN TWO INTERMEDIATE POSTS, EXCEPT THAT A SHORTER LENGTH IS PERMITTED AT EXPANSION JOINTS, ELECTRIC POST OPENING AND OTHER RAIL DISCONTINUITIES.
5. WHEN RAIL IS ON SLOPE, PLACE FABRIC PARALLEL TO SLOPE.
6. ALTERNATIVE DETAILS MAY BE SUBMITTED BY CONTRACTOR FOR ENGINEERS APPROVAL.
7. FOR DETAILS AND REINFORCEMENT NOT SHOWN SEE STANDARD PLAN BM-76.
8. SEE GENERAL PLANS DWG. NO. BM-74 FOR LIMITS OF CHAIN LINK RAILING.
9. PROVIDE THIMBLES AT ALL CABLE LOOPS.

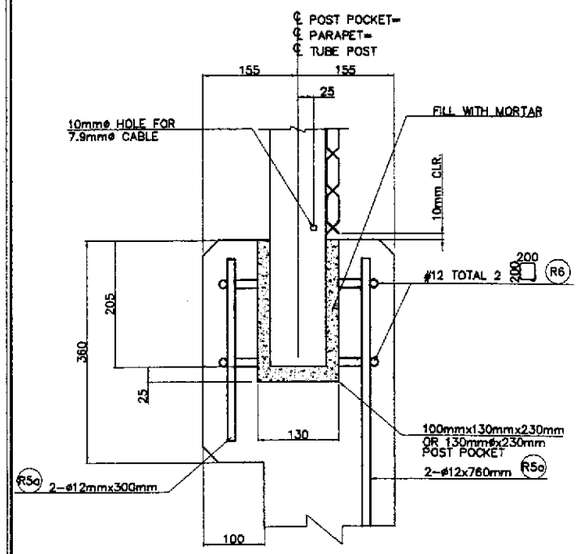

B POST ANCHORAGE DETAIL
SCALE 1:5

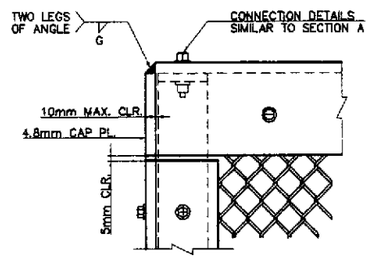

D END POST ELEVATION
SCALE NTS

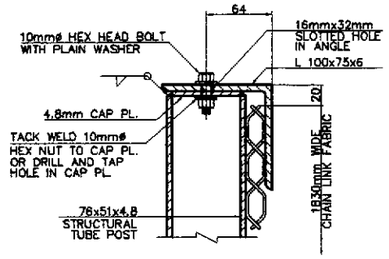

E SECTION A
SCALE NTS

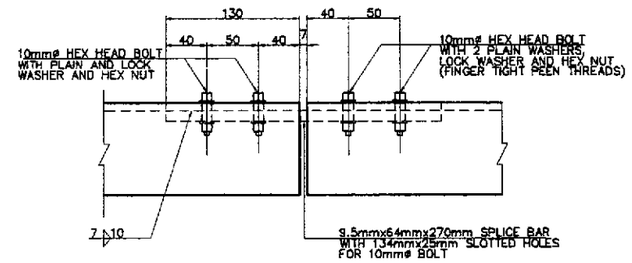

H SPLICE JOINT DETAIL
SCALE NTS

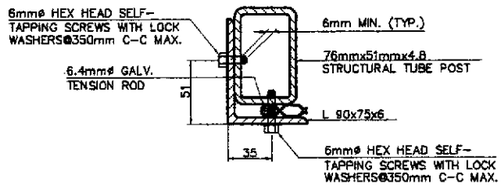

F SECTION
SCALE NTS

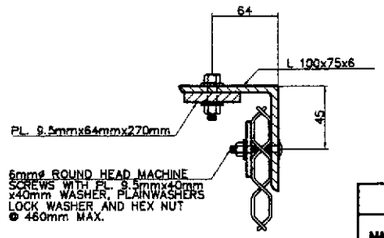

G SECTION B
SCALE NTS

A CHAIN LINK RAILING DETAILS
SCALE AS SHOWN

MATERIAL LIST OF CHAIN LINK

MATERIAL NAME	SIZE	LENGTH (m)	NO. (pcs)	UNIT	UNIT WT. (kg/m)	WEIGHT (kgs)	REMARKS
STRUCTURAL TUBE POST	LR 76x51x4.8	2.075	22	kg.	51.61	2,356.17	
ANGLE BAR (INTERMEDIATE POST)	L 100x75x6	47.264	1	kg.	8.04	380.00	
ANGLE BAR (END POST)	L 90x75x6	1.830	2	kg.	7.55	27.63	
CAP PLATE	76x51x4.8	–	22	kg.	0.15	3.21	
STEEL PLATE (SPLICE PLATE)	9.5x64x270	–	22	kg.	1.29	28.35	
CHAIN LINK FABRIC	1830x47264x25	–	–	sq. m.	–	86.49	
TENSION ROD (GALVANIZED)	ø6.4	1.830	22	kg.	0.25	40.26	
CABLE (GALVANIZED)	ø7.9	47.264	1	kg.	0.25	47.26	

JICA
JAPAN INTERNATIONAL COOPERATION AGENCY
KEI KATAHIRA & ENGINEERS INTERNATIONAL
YEO YACHIYO ENGINEERING CO., LTD.

	DATE	SIGNATURE
DESIGNED	9/14/02	F. P. DE JESUS
CHECKED	9/18/02	J. E. SANTOS
SUBMITTED	9/20/02	TEAM LEADER

REPUBLIC OF THE PHILIPPINES
DEPARTMENT OF PUBLIC WORKS AND HIGHWAYS

PUHL – PMO	BUREAU OF DESIGN		OFFICE OF THE SECRETARY	
Submitted By:	Reviewed By:	Recommended By:	Recommended By: (See cover sheet for Signature)	Approved By: (See cover sheet for Signature/Approval)
DANILO C. TRAJANO	ADRIANO M. DOROY	GILBERTO S. REYES	MANUEL M. BONOAN	SIMEON A. DATUMANONG
Project Director	Chief, Bridges Division	Director IV (OIC)	Undersecretary	Secretary

PROJECT AND LOCATION :
THE DETAILED DESIGN STUDY ON UPGRADING INTER-URBAN HIGHWAY SYSTEM ALONG THE PAN-PHILIPPINE HIGHWAY (Plaridel, Cabanatuan and San Jose Bypasses)
PLARIDEL BYPASS - CONTRACT PACKAGE I

SCALE : AS SHOWN
FULL SIZE A1

SHEET CONTENTS :
INTERCHANGE RAMP
CHAIN LINK RAIILING DETAILS

SHEET NO. : RB-75

NOTE :
SIDEWALK SHALL BE PLACED AFTER THE SHORING UNDER THE SUPERSTRUCTURE HAS BEEN RELEASED SUFFICIENTLY TO PERMIT THE SPANS TO ATTAIN FULL DEAD LOAD DEFLECTION.

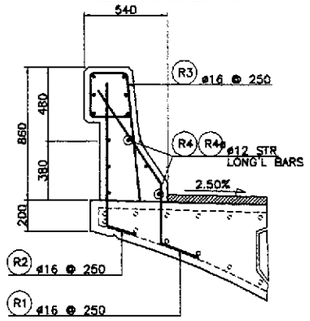

C1 TYPICAL RAILING DETAIL
SCALE 1:20

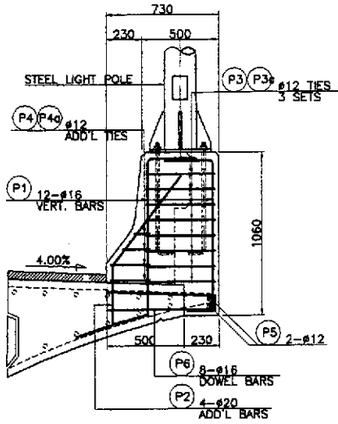

C2 ELEVATION
SCALE 1:20

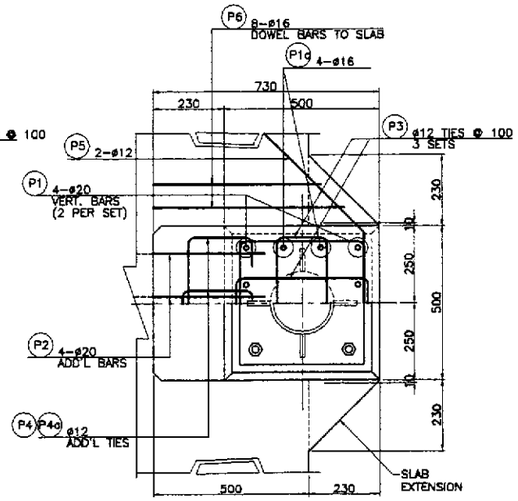

C3 PLAN
SCALE 1:10

D DETAILS OF DEFLECTION JOINTS
SCALE AS SHOWN

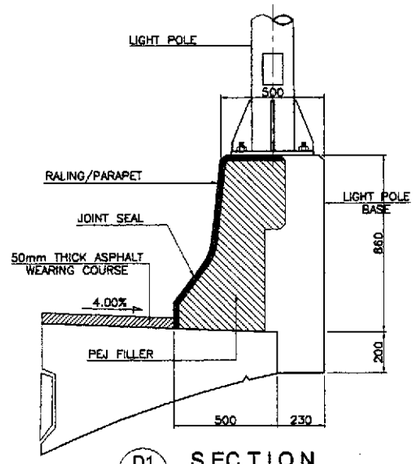

D1 SECTION
SCALE 1:15

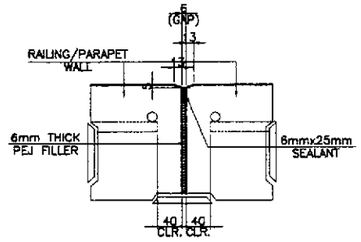

NOTE : PROVIDE WALL JOINTS AT CONTINOUOS PIER POSITIONS AND AT SPANS AS SHOWN IN DWG. NO. BM-74

D2 DETAILS @ WALL JOINT
SCALE 1:5

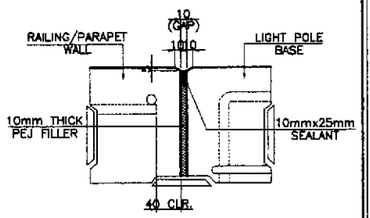

D2 DETAILS @ LIGHT POLE BASE/WALL JOINT
SCALE 1:5

D DETAILS OF DEFLECTION JOINTS
SCALE AS SHOWN

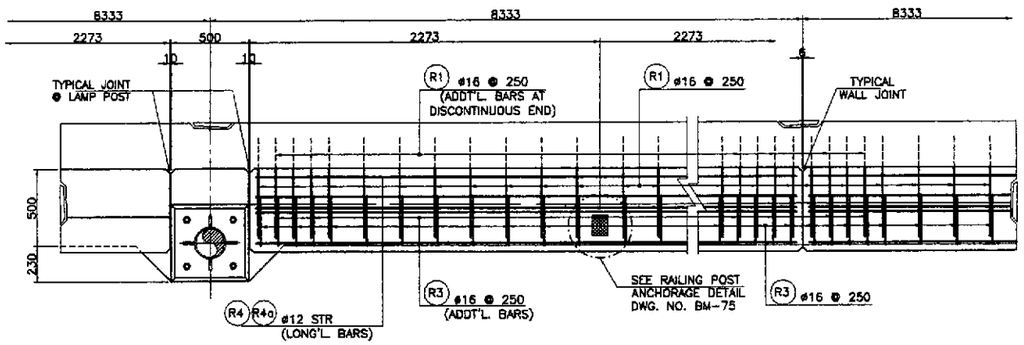

B PLAN
SCALE 1:20

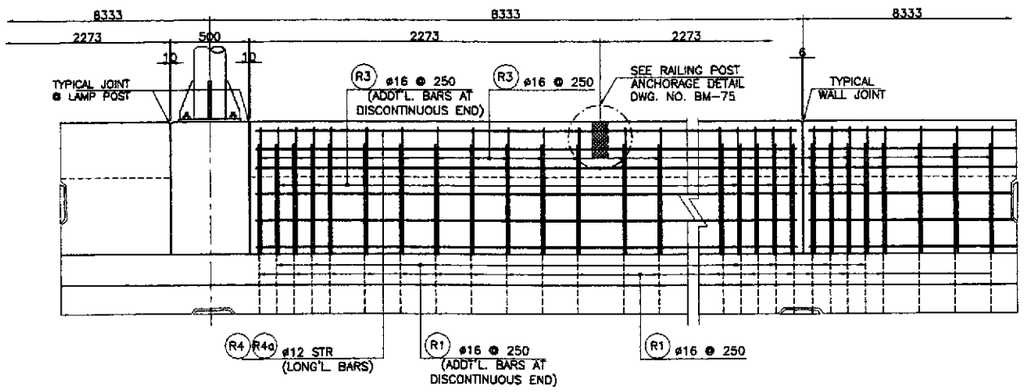

A ELEVATION
SCALE 1:20

1 RAILING/PARAPET REINFORCEMENT DETAILS
SCALE AS SHOWN

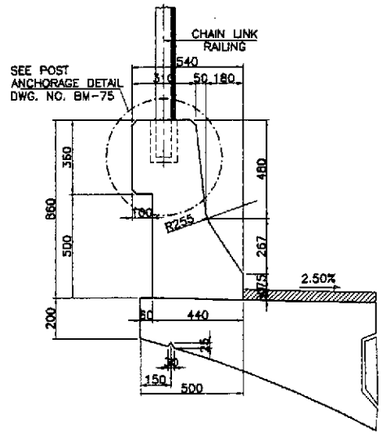

E TYPICAL RAILING DETAIL
SCALE 1:15

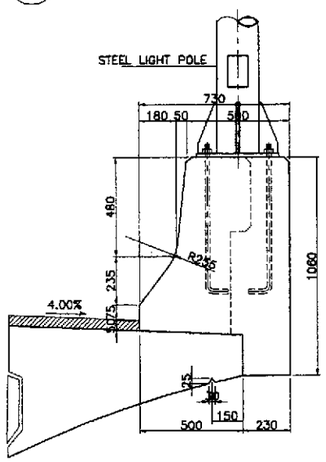

F TYPICAL LIGHT POST DETAIL
SCALE 1:15

BAR BENDING DIAGRAM

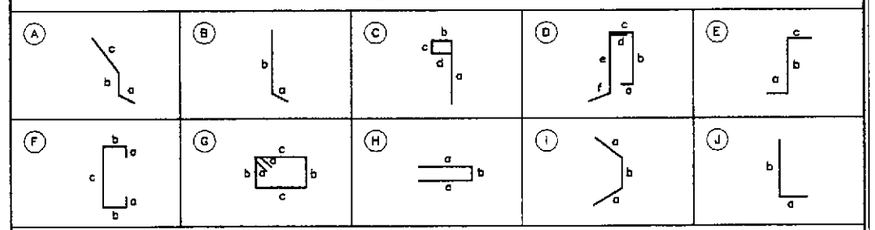

SCHEDULE OF REINFORCEMENT

LOCATION	BAR MARK	SIZE (mm)	BEND TYPE	DIMENSION(mm) OUT TO OUT a	b	c	d	e	f	LENGTH (mm)	NO. REQ'D.	UNIT WEIGHT (kg/m)	WEIGHT (kg) GRADE 40	GRADE 60
RAILING/PARAPET	R1	16	A	150	350	750				1250	760	1.578	1499	
	R2	16	B	150	950					1100	760	1.578	1319	
	R3	16	C	820	230	280	230			1560	760	1.578	1871	
	R4	12	Str	12000						12000	192	0.888	2046	
	R4a	12	Str	4000						4000	24	0.888	85	
	R5	12	J	200	760					960	44	0.888	38	
	R5a	12	J	200	300					500	44	0.888	20	
	R6	12	G	50	200	200				900	44	0.888	35	
										Total (180 meters)Both Sides =			6913	
LAMP POST	P1	20	D	130	960	400	200	1000	300	2990	4	2.466	29	
	P1a	16	E	150	960	300				1410	4	1.578	9	
	P2	20	A	150	350	750				1250	4	2.466	12	
	P3	12	G	110	400	400				1820	8	0.888	13	
	P3a	12	G	110	135	400				1290	16	0.888	18	
	P4	12	F	110	300	400				1140	4	0.888	4	
					220									
	P4a	12	F	110	300	135				875	4	0.888	3	
					220									
	P5	12	I	1000	500					1500	2	0.888	3	
	P6	16	H	700	100					1500	8	1.578	19	
											Total / Post =		110	
											Total (3) =		330	

THE REINFORCEMENT SHOWN ON THIS TABLE IS FOR REFERENCE ONLY. THE CONTRACTOR SHOULD CHECK AND VERIFY ALL DIMENSIONS, SIZES AND QUANTITIES OF REINFORCEMENT.

JICA
JAPAN INTERNATIONAL COOPERATION AGENCY
KEI KATAHIRA & ENGINEERS INTERNATIONAL
YBO YACHIYO ENGINEERING CO., LTD.

	DATE	SIGNATURE
DESIGNED	9/16/02	F. P. DE JESUS
CHECKED	9/18/02	J. SANTOS
SUBMITTED	9/20/02	M. KAGEYAMA TEAM LEADER

REPUBLIC OF THE PHILIPPINES
DEPARTMENT OF PUBLIC WORKS AND HIGHWAYS

PJHL – PMO	BUREAU OF DESIGN		OFFICE OF THE SECRETARY	
Submitted By:	Reviewed By:	Recommended By:	Recommended By: (See cover sheet for Signature)	Approved By: (See cover sheet for Signature/Approval)
DANILO C. TRAJANO	ADRIANO M. DOROY	GILBERTO S. REYES	MANUEL M. BONDAN	SIMEON A. DATUMANONG
Project Director	Chief, Bridges Division	Director IV (OIC)	Undersecretary	Secretary

PROJECT AND LOCATION :
THE DETAILED DESIGN STUDY ON UPGRADING INTER-URBAN HIGHWAY SYSTEM ALONG THE PAN-PHILIPPINE HIGHWAY (Plaridel, Cabanatuan and San Jose Bypasses)
PLARIDEL BYPASS - CONTRACT PACKAGE I

SCALE : AS SHOWN
FULL SIZE A1

SHEET CONTENTS :
INTERCHANGE RAMP
RAILING/PARAPET REINFORCEMENT DETAILS

SHEET NO. : RB-76

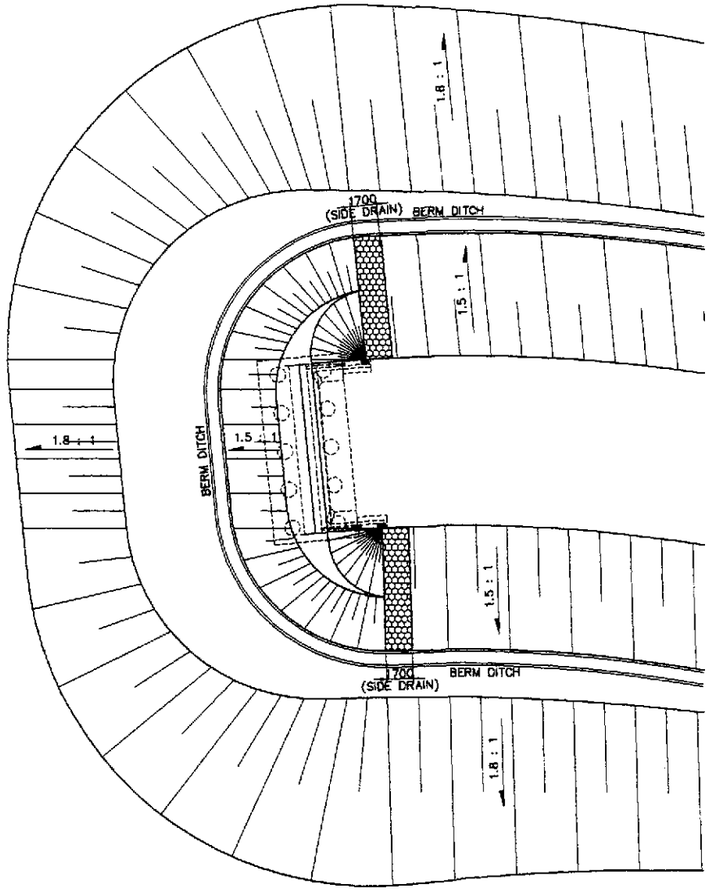

A PLAN
SCALE 1:200

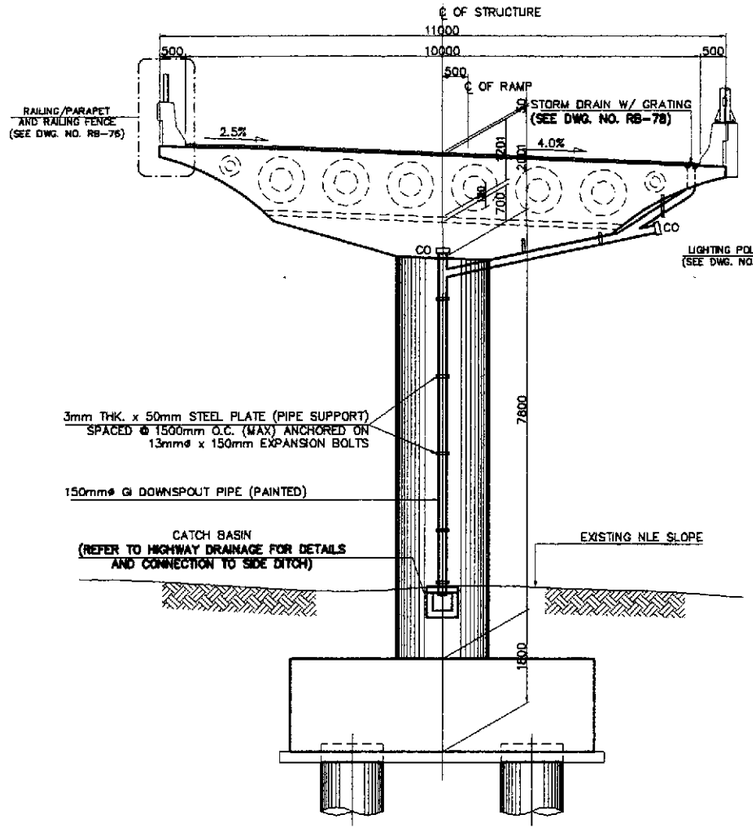

C DRAINAGE-SECTION (PIER 1 FACING PIER 2)
SCALE 1:60

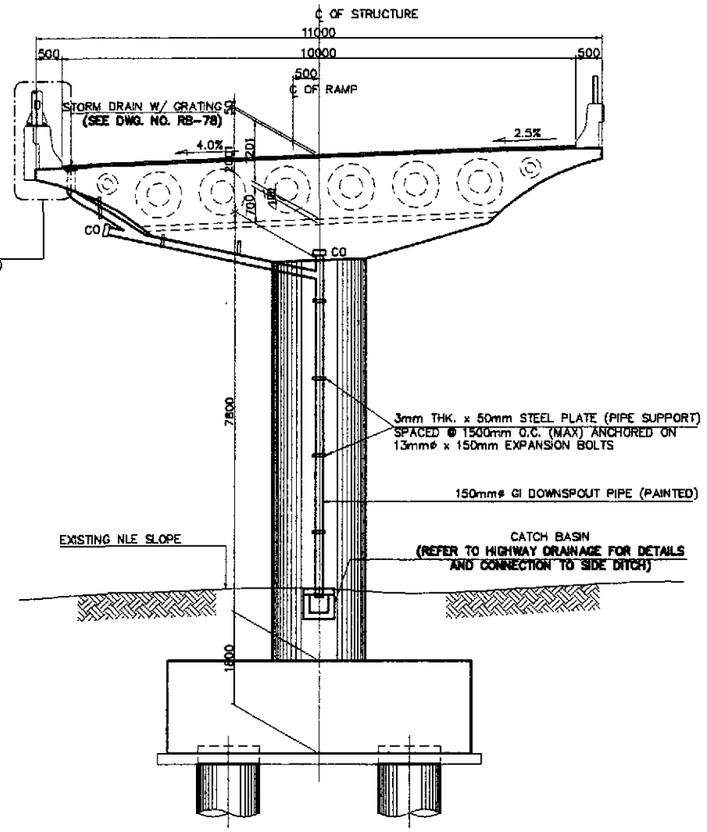

D DRAINAGE-SECTION (PIER 3 FACING PIER 2)
SCALE 1:60

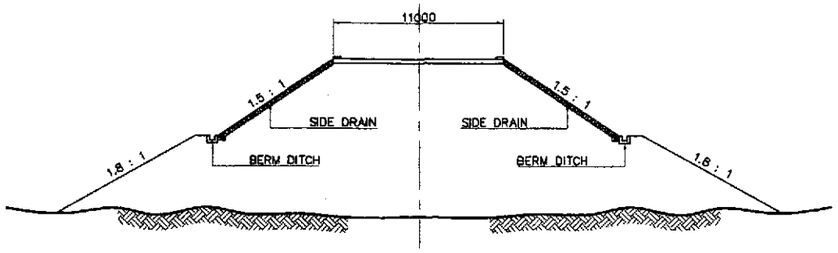

B SECTION @ SIDE DRAIN
SCALE 1:200

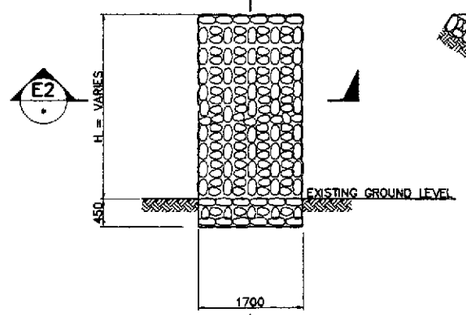

E1 ELEVATION
SCALE- 1:50

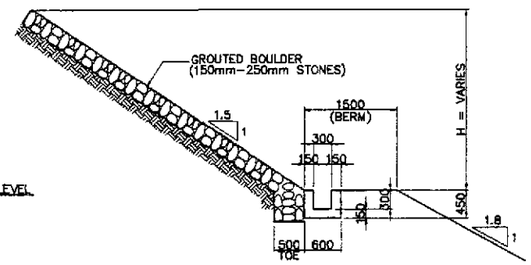

E3 SECTION
SCALE- 1:50

NOTE :
1. FOR BRIDGE DRAINAGE LAYOUT, SEE DRAWING NO. RB-74.
2. FOR BERM DITCH DETAILS, SEE HIGHWAY DRAINAGE PLAN.

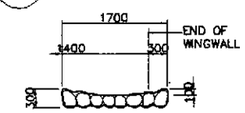

E2 SECTION
SCALE 1:50

E SIDE DRAIN DETAILS
SCALE AS SHOWN

JICA JAPAN INTERNATIONAL COOPERATION AGENCY		DATE	SIGNATURE
KATAHIRA & ENGINEERS INTERNATIONAL / YACHIYO ENGINEERING CO., LTD.	DESIGNED	9/16/02	P. DE JESUS
	CHECKED	9/18/02	J. C. SANTOS
	SUBMITTED	9/20/02	TEAM LEADER

REPUBLIC OF THE PHILIPPINES
DEPARTMENT OF PUBLIC WORKS AND HIGHWAYS

PJHL – PMO	BUREAU OF DESIGN		OFFICE OF THE SECRETARY	
Submitted By:	Reviewed By:	Recommended By:	Recommended By: (See cover sheet for Signature)	Approved By: (See cover sheet for Signature/Approval)
DANILO C. TRAJANO	ADRIANO M. DOROY	GILBERTO S. REYES	MANUEL M. BONGAN	SIMEON A. DATUMANONG
Project Director	Chief, Bridges Division	Director IV (OIC)	Undersecretary	Secretary

PROJECT AND LOCATION :
THE DETAILED DESIGN STUDY ON UPGRADING INTER-URBAN HIGHWAY SYSTEM ALONG THE PAN-PHILIPPINE HIGHWAY (Plaridel, Cabanatuan and San Jose Bypasses)
PLARIDEL BYPASS - CONTRACT PACKAGE I

SCALE : AS SHOWN
FULL SIZE A1

SHEET CONTENTS :
INTERCHANGE RAMP
ABUTMENT AND PIER DRAINAGE

SHEET NO. : RB-77

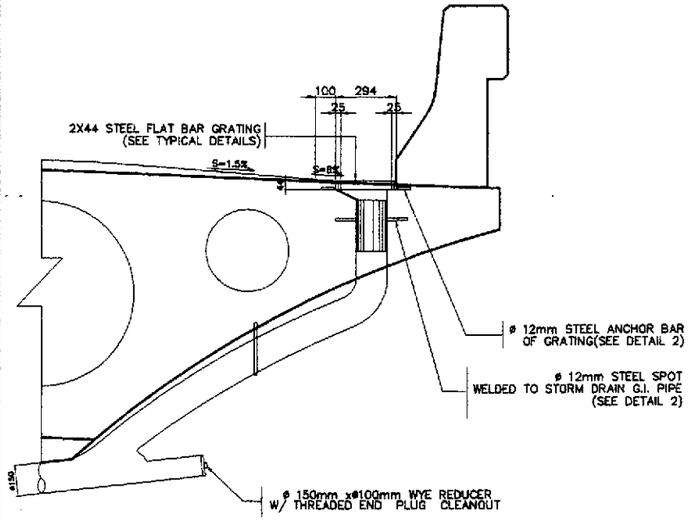

B SECTION 1-1 (TYPICAL FOR HOLLOW SLAB)
SCALE 1 : 150

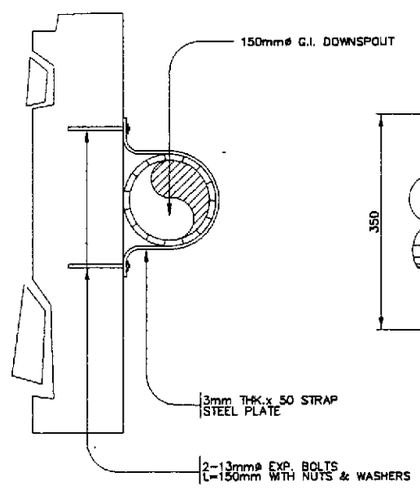

D1 SECTION "D"
SCALE 1 : 50

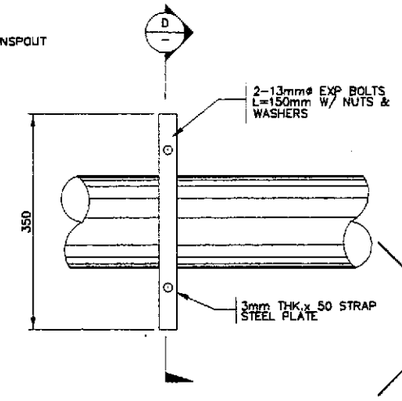

D2 P L A N
SCALE 1 : 50

D TYPICAL DETAILS OF STRAP FOR DOWNSPOUT PIPE
SCALE AS SHOWN

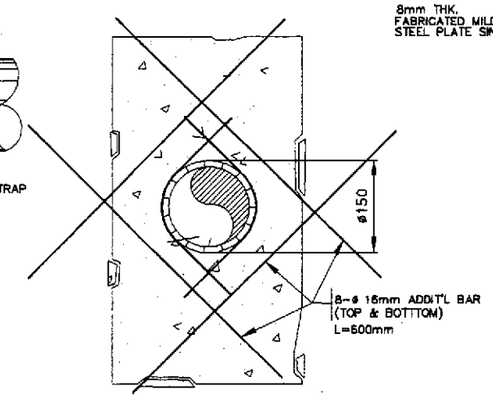

F DETAIL "1"
SCALE 1 : 50

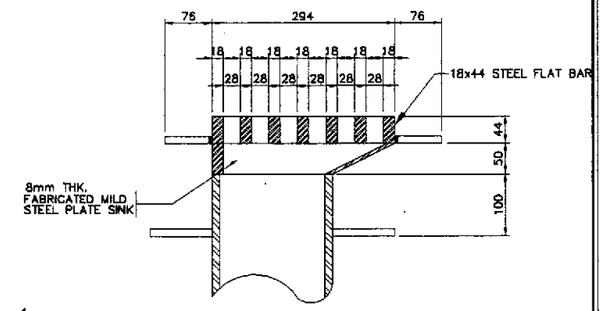

I SECTION "C"
SCALE 1 : 50

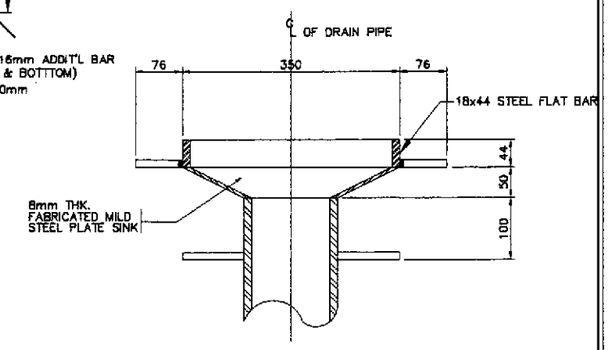

H SECTION "B"
SCALE 1 : 50

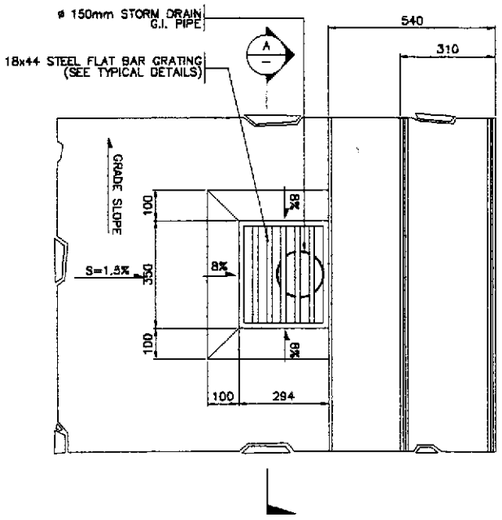

A WITH GRATING (TYPICAL FOR HOLLOW SLAB)
SCALE 1 : 100

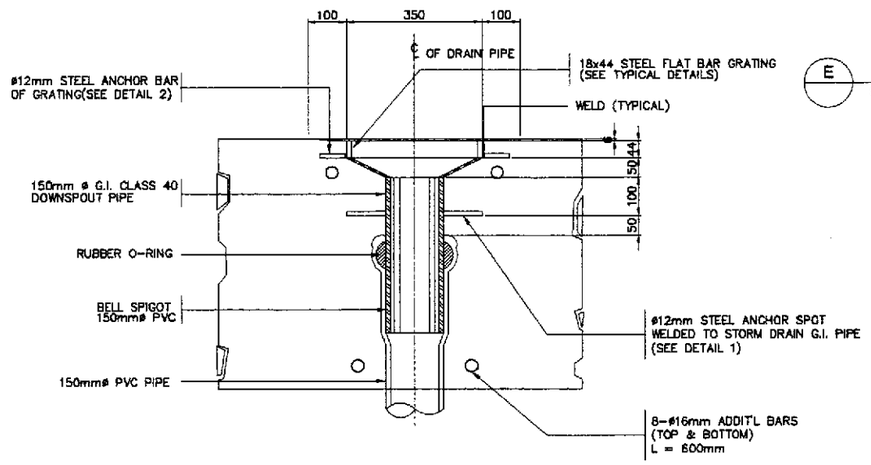

C SECTIO "A"
SCALE 1 : 80

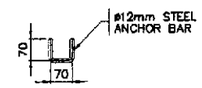

E DETAIL "1"
SCALE 1 : 50

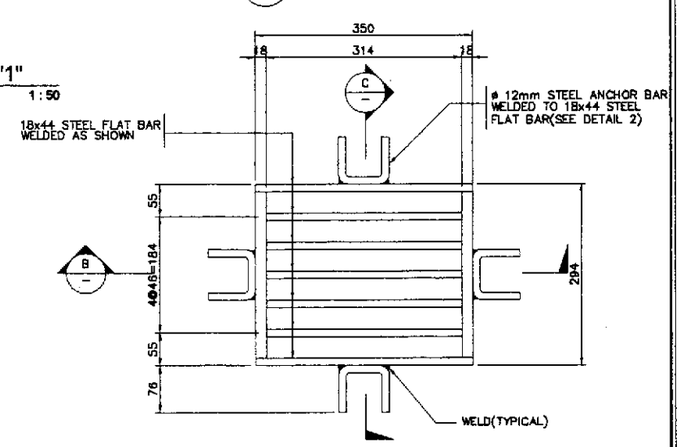

G P L A N
SCALE 1 : 50

1 TYPICAL DETAILS OF STORM DRAIN WITH GRATING
SCALE AS SHOWN

		DATE	SIGNATURE
JICA JAPAN INTERNATIONAL COOPERATION AGENCY	DESIGNED	9/16/02	F. P. DE JESUS
KATAHIRA & ENGINEERS INTERNATIONAL / YACHIYO ENGINEERING CO., LTD.	CHECKED	9/18/02	J. C. SANTOS
	SUBMITTED	9/20/02	M. KOCHI TEAM LEADER

REPUBLIC OF THE PHILIPPINES
DEPARTMENT OF PUBLIC WORKS AND HIGHWAYS

PJHL – PMO	BUREAU OF DESIGN		OFFICE OF THE SECRETARY	
Submitted By:	Reviewed By:	Recommended By:	Recommended By: (See cover sheet for Signature)	Approved By: (See cover sheet for Signature/Approval)
DANILO C. TRAJANO	ADRIANO M. DOROY	GILBERTO S. REYES	MANUEL M. BONOAN	SIMEON A. DATUMANONG
Project Director	Chief, Bridges Division	Director IV (OIC)	Undersecretary	Secretary

PROJECT AND LOCATION :	SCALE :	SHEET CONTENTS :	SHEET NO. :
THE DETAILED DESIGN STUDY ON UPGRADING INTER-URBAN HIGHWAY SYSTEM ALONG THE PAN-PHILIPPINE HIGHWAY (Plaridel, Cabanatuan and San Jose Bypasses)	AS SHOWN	INTERCHANGE RAMP TYPICAL STORM DRAIN DETAIL WITH GRATING	RB-78
PLARIDEL BYPASS - CONTRACT PACKAGE I	FULL SIZE A1		

CONSTRUCTION WORKS

STAGE 1 – PREPARE SITE, PRE-LOAD EMBANKMENT

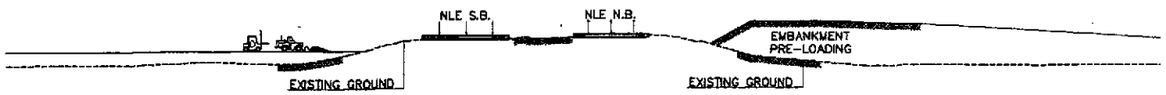

STAGE 2 – CONSTRUCT BORED PILE AND PILE CAP
(EXCAVATE, REBAR, CONCRETING BORED PILE AND PILE CAP)

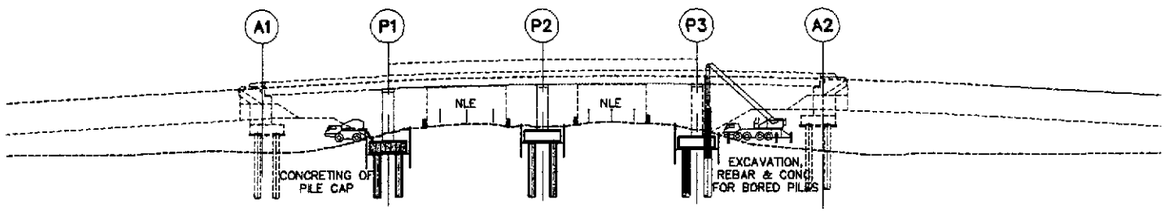

STAGE 3 – BUILD COLUMNS, COPING AND CONSTRUCT ABUTMENTS.

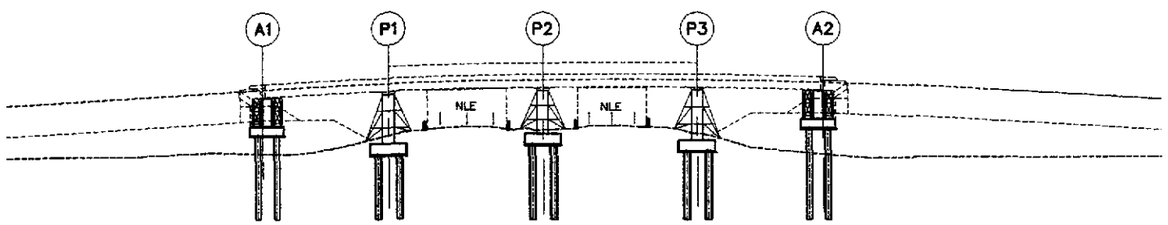

STAGE 4 – ERECT SHORING/SCAFFOLDING/FORMWORKS.

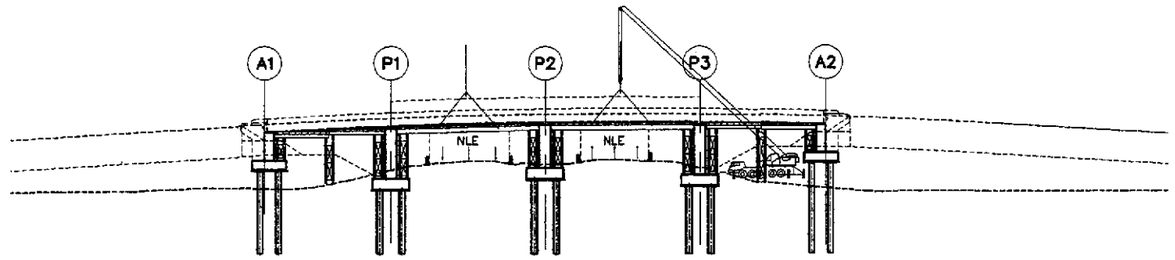

STAGE 5 – CONSTRUCT VOIDED SLAB (REBAR WORKS, POURING CONCRETE & STRESSING) AND REMOVE SHORING/SCAFFOLDING.

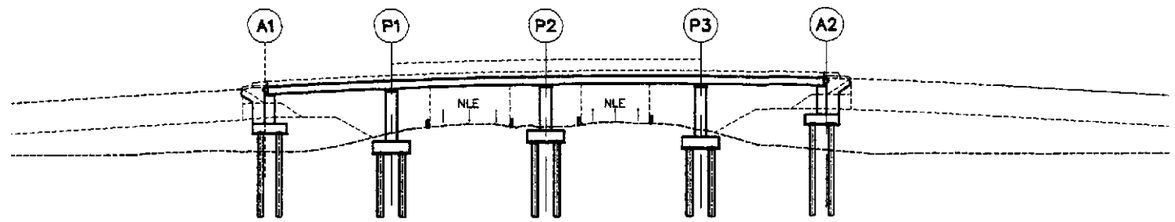

STAGE 6 – FINISHING WORKS (RAILINGS, ASPALT WEARING COURSE, OTHERS)

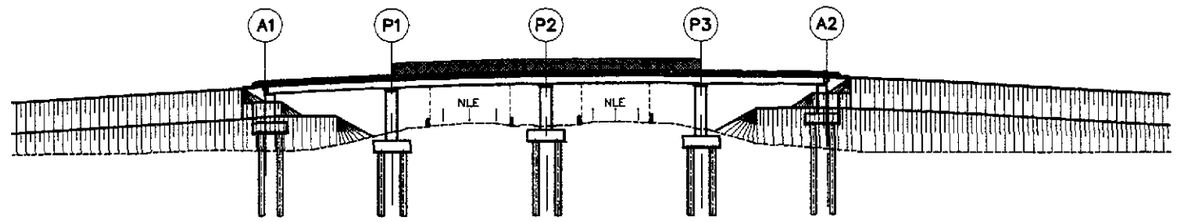

A CONSTRUCTION SEQUENCE
SCALE 1 : 500

NOTES :

1. THE CONTRACTOR SHALL SECURE ALL NECESSARY PERMITS, SAFETY REQUIREMENTS, WORK/CONSTRUCTION REQUIREMENTS TO MANILA NORTH TOLLWAY CORP. (MNTC) PRIOR TO ANY CONSTRUCTION WORK.
2. A WORK PLAN INCLUDING SCHEDULE, TRAFFIC MANAGEMENT, CONSTRUCTION PROCEDURE, DETAILS OF TEMPORARY WORKS, SHORING/SCAFFOLDING, ETC. SHALL BE PREPARED BY THE CONTRACTOR FOR THE APPROVAL OF THE ENGINEER/MNTC PRIOR TO CONSTRUCTION.
3. PRELOADING OF EMBANKMENT IS NECESSARY FOR AT LEAST 6 MONTHS PRIOR TO CONSTRUCTION OF ABUTMENTS. THE WORK PROGRAM FOR PRELOADING AND EMBANKMENT WORKS SHALL BE PREPARED BY THE CONTRACTOR FOR THE APPROVAL OF THE ENGINEER PRIOR TO START OF WORK ACTIVITIES.
4. DAMAGES TO EXISTING STRUCTURES, PAVEMENTS, ETC. SHALL BE PREPARED/REPLACED BY THE CONTRACTOR AT HIS OWN EXPENSE.
5. THE CONTRACTOR SHALL BE RESPONSIBLE FOR THE SAFETY OF ALL VEHICLES AND COMMUTERS USING THE EXPRESSWAY.

JICA JAPAN INTERNATIONAL COOPERATION AGENCY		DATE	SIGNATURE	REPUBLIC OF THE PHILIPPINES DEPARTMENT OF PUBLIC WORKS AND HIGHWAYS				PROJECT AND LOCATION :	SCALE :	SHEET CONTENTS :	SHEET NO. :
KATAHIRA & ENGINEERS INTERNATIONAL / YACHIYO ENGINEERING CO., LTD.	DESIGNED	9/16/02	P. P. DE JESUS	PJHL – PMO	BUREAU OF DESIGN		OFFICE OF THE SECRETARY	THE DETAILED DESIGN STUDY ON UPGRADING INTER-URBAN HIGHWAY SYSTEM ALONG THE PAN-PHILIPPINE HIGHWAY (Plaridel, Cabanatuan and San Jose Bypasses)	AS SHOWN	INTERCHANGE RAMP CONSTRUCTION SEQUENCE	RB-81
	CHECKED	9/18/02	J. C. SANTOS	Submitted By:	Reviewed By:	Recommended By:	Recommended By: (See cover sheet for Signature) / Approved By: (See cover sheet for Signature/Approval)				
	SUBMITTED	9/20/02	TEAM LEADER	DANILO C. TRAJANO, Project Director	ADRIANO M. DOROY, Chief, Bridges Division	GILBERTO S. REYES, Director IV (OIC)	MANUEL M. BONOAN, Undersecretary / SIMEON A. DATUMANONG, Secretary	PLARIDEL BYPASS - CONTRACT PACKAGE I	FULL SIZE A1		

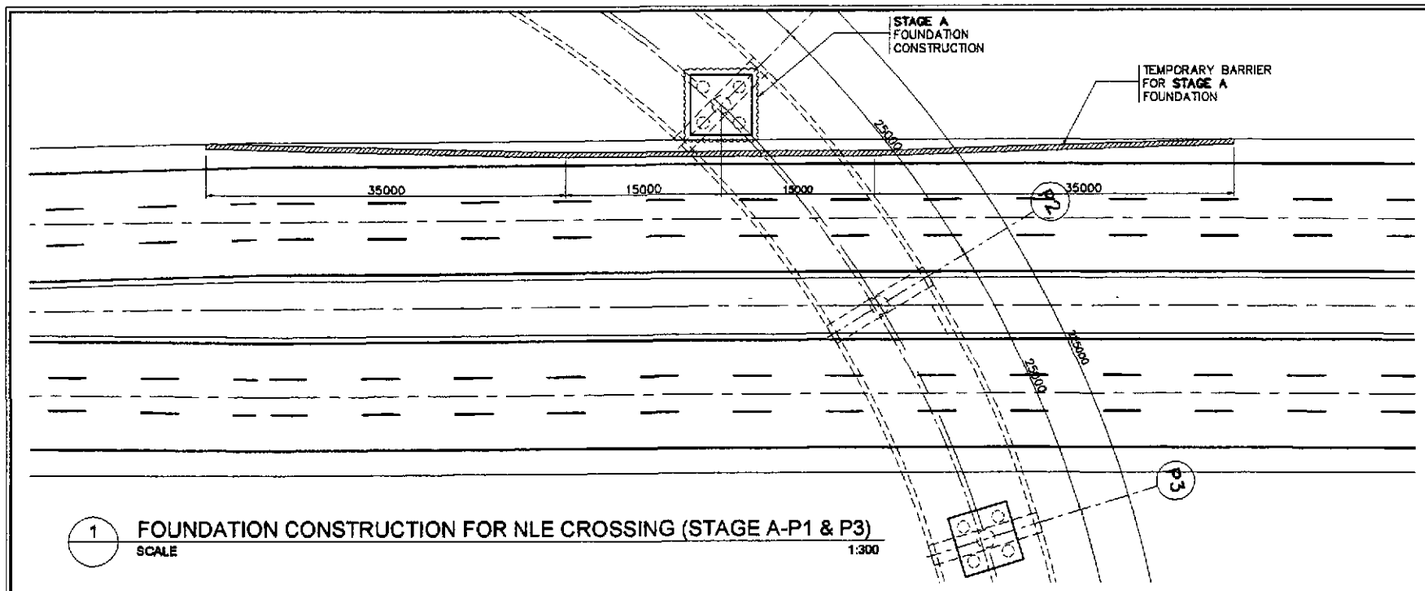

1 FOUNDATION CONSTRUCTION FOR NLE CROSSING (STAGE A-P1 & P3)
SCALE 1:300

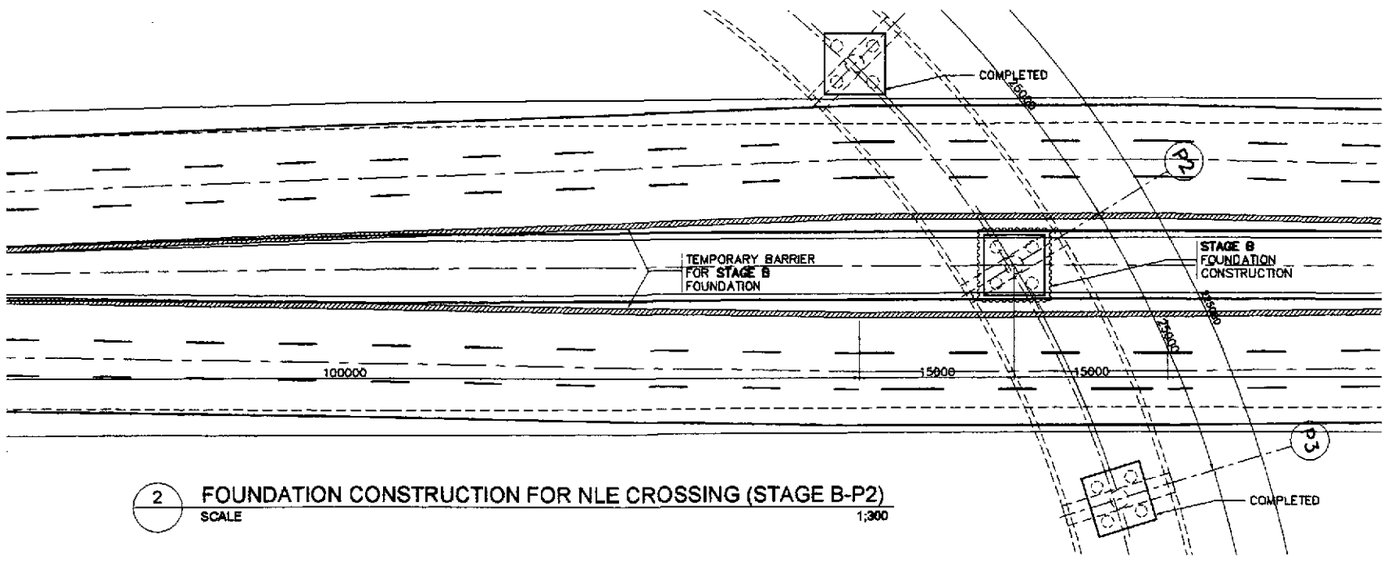

2 FOUNDATION CONSTRUCTION FOR NLE CROSSING (STAGE B-P2)
SCALE 1:300

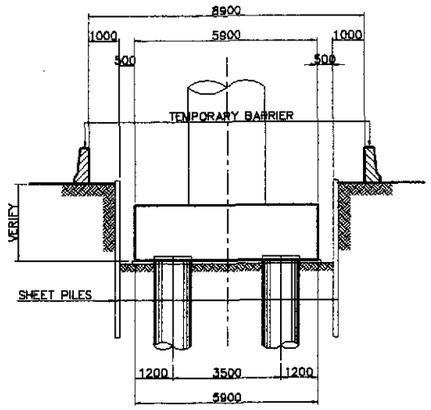

A ELEVATION (STAGE B)
SCALE 1 : 100

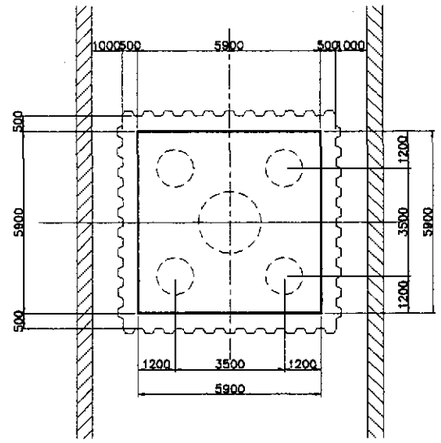

B PLAN (STAGE B)
SCALE 1 : 100

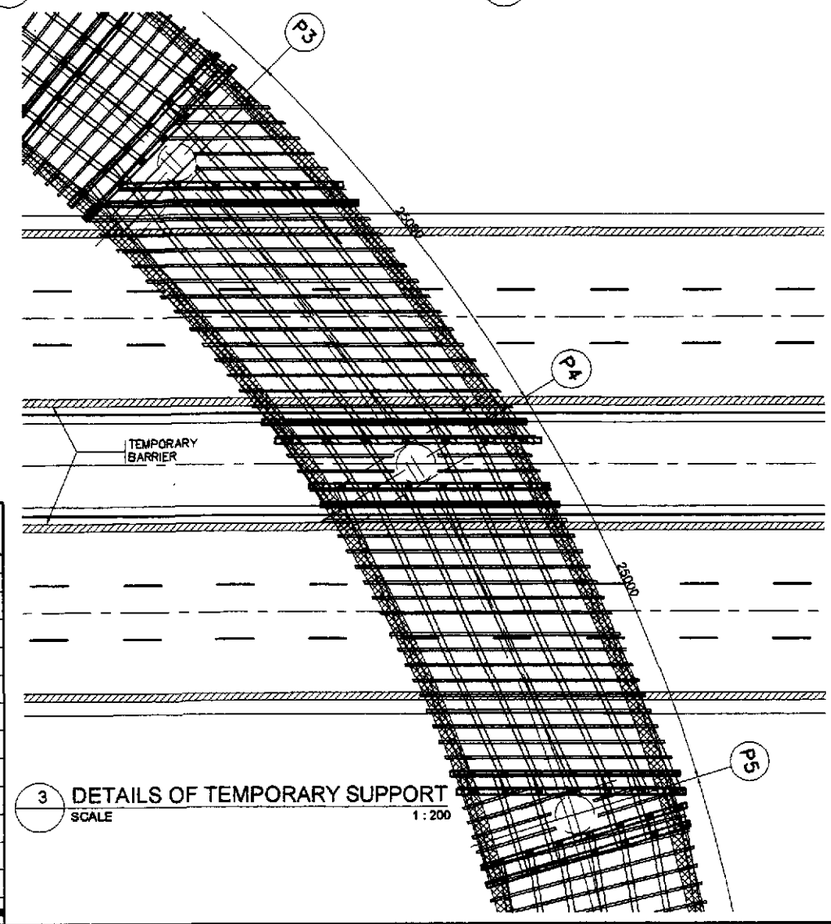

3 DETAILS OF TEMPORARY SUPPORT
SCALE 1 : 200

CONSTRUCTION SCHEDULE OF INTERCHANGE © RAMP BRIDGE
BRIDGE LENGTH = 90m (20 + 2@25 + 20)

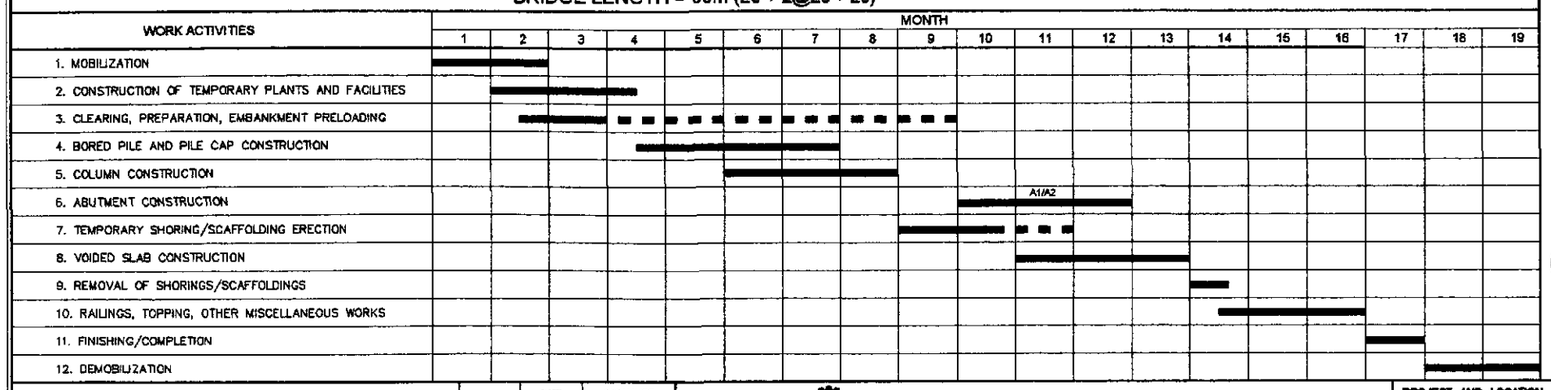

JICA
JAPAN INTERNATIONAL COOPERATION AGENCY
KEI KATAHIRA & ENGINEERS INTERNATIONAL
YEC YACHIYO ENGINEERING CO., LTD.

	DATE	SIGNATURE
DESIGNED	9/16/02	F. P. DE JESUS
CHECKED	9/18/02	J. C. SANTOS
SUBMITTED	9/20/02	M. OHSHI, TEAM LEADER

REPUBLIC OF THE PHILIPPINES
DEPARTMENT OF PUBLIC WORKS AND HIGHWAYS

PJHL – PMO	BUREAU OF DESIGN		OFFICE OF THE SECRETARY	
Submitted By:	Reviewed By:	Recommended By:	Recommended By: (See cover sheet for Signature)	Approved By: (See cover sheet for Signature/Approval)
DANILO C. TRAJANO	ADRIANO M. DOROY	GILBERTO S. REYES	MANUEL M. BONOAN	SIMEON A. DATUMANONG
Project Director	Chief, Bridges Division	Director IV (OIC)	Undersecretary	Secretary

PROJECT AND LOCATION :
THE DETAILED DESIGN STUDY ON UPGRADING INTER-URBAN HIGHWAY SYSTEM ALONG THE PAN-PHILIPPINE HIGHWAY (Plaridel, Cabanatuan and San Jose Bypasses)
PLARIDEL BYPASS - CONTRACT PACKAGE I

SCALE : AS SHOWN
FULL SIZE A1

SHEET CONTENTS :
INTERCHANGE RAMP
FOUNDATION CONSTRUCTION DETAIL AND CONSTRUCTION SCHEDULE

SHEET NO. : RB-82

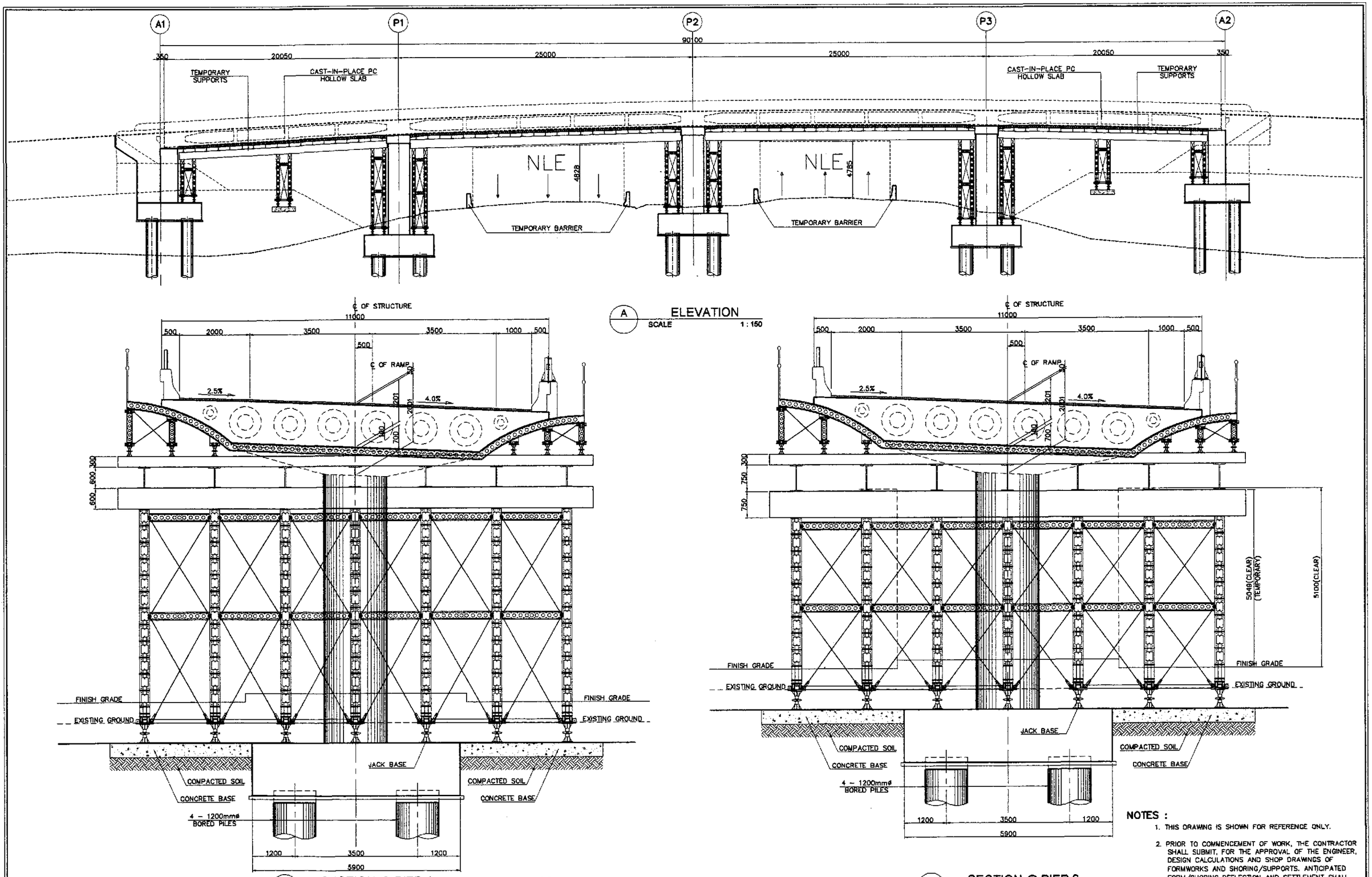

A ELEVATION
SCALE 1 : 150

B SECTION @ PIER 1
SCALE 1 : 50

1 SHORING DETAILS (SECTIONS AND ELEVATIONS)
SCALE AS SHOWN

C SECTION @ PIER 2
SCALE 1 : 50

NOTES :

1. THIS DRAWING IS SHOWN FOR REFERENCE ONLY.
2. PRIOR TO COMMENCEMENT OF WORK, THE CONTRACTOR SHALL SUBMIT, FOR THE APPROVAL OF THE ENGINEER, DESIGN CALCULATIONS AND SHOP DRAWINGS OF FORMWORKS AND SHORING/SUPPORTS. ANTICIPATED FORM/SHORING DEFLECTION AND SETTLEMENT SHALL BE INDICATED ON THE SUBMITTAL.

JICA
JAPAN INTERNATIONAL COOPERATION AGENCY
KATAHIRA & ENGINEERS INTERNATIONAL
YACHIYO ENGINEERING CO., LTD.

	DATE	SIGNATURE
DESIGNED	9/16/02	R. P. DE JESUS
CHECKED	9/18/02	J. Z. SUNTOS
SUBMITTED	9/20/02	M. KAWAGUCHI TEAM LEADER

REPUBLIC OF THE PHILIPPINES
DEPARTMENT OF PUBLIC WORKS AND HIGHWAYS

PJHL – PMO	BUREAU OF DESIGN		OFFICE OF THE SECRETARY	
Submitted By:	Reviewed By:	Recommended By:	Recommended By: (See cover sheet for Signature)	Approved By: (See cover sheet for Signature/Approval)
DANILO C. TRAJANO	ADRIANO M. DOROY	GILBERTO S. REYES	MANUEL M. BONOAN	SIMEON A. DATUMANONG
Project Director	Chief, Bridges Division	Director IV (OIC)	Undersecretary	Secretary

PROJECT AND LOCATION :
THE DETAILED DESIGN STUDY ON UPGRADING INTER-URBAN HIGHWAY SYSTEM ALONG THE PAN-PHILIPPINE HIGHWAY (Plaridel, Cabanatuan and San Jose Bypasses)
PLARIDEL BYPASS - CONTRACT PACKAGE I

SCALE : AS SHOWN
FULL SIZE A1

SHEET CONTENTS :
INTERCHANGE RAMP
SHORING DETAILS (SECTIONS AND ELEVATIONS)

SHEET NO. : RB-83

ELECTRICAL

LEGEND AND SYMBOLS:

- STREET LIGHTING POLE WITH 1 x 250 WATTS, 240 VOLTS HIGH PRESSURE SODIUM LUMINAIRE SINGLE BRACKET / SINGLE ARM, LOCATED AT 180° ON CENTER IES TYPE III MEDIUM SEMI CUT-OFF, SIMILAR TO GE M250A2
- –DITTO– DOUBLE ARM LIGHT POLE WITH 2 x 250 WATTS HPS LAMP
- SERVICE ENTRANCE AND METERING PEDESTAL WITH LIGHTING CONTACTOR PANEL AS SHOWN IN THE DRAWINGS.
- CIRCUIT BREAKER, RATING AS SHOWN
- UNDERGROUND CONDUIT WITH CONCRETE ENVELOPE
- UNDERGROUND CONDUIT WITH STEEL REINFORCED CONCRETE ENVELOPE
- (M) KILOWATT HOUR METER, SINGLE-PHASE, 240V, 60 Hz
- CIRCUIT HOMERUN

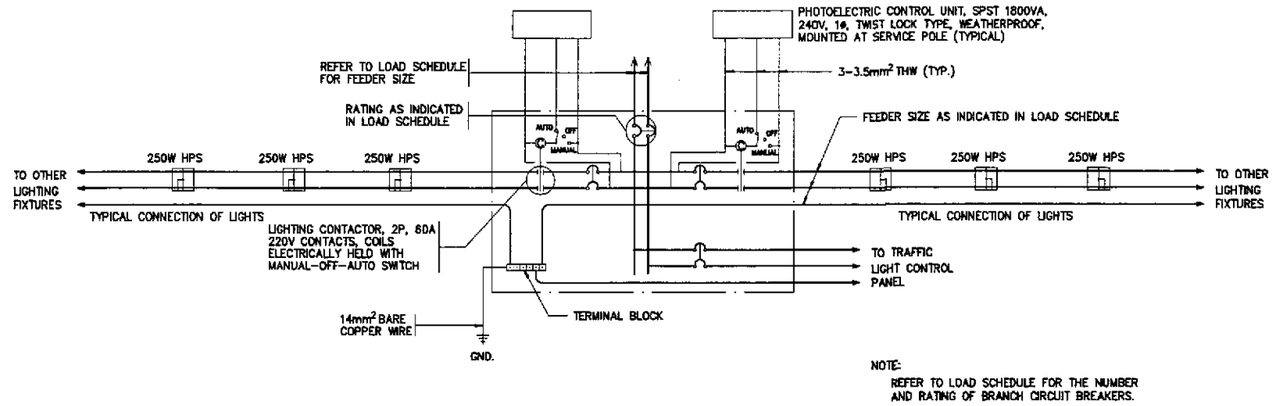

NOTE:
REFER TO LOAD SCHEDULE FOR THE NUMBER AND RATING OF BRANCH CIRCUIT BREAKERS.

2 / ES-01 **SCHEMATIC CONTROL DIAGRAM**
SCALE 1-20

GENERAL NOTES:

1. ALL ELECTRICAL WORKS SHALL BE DONE IN ACCORDANCE WITH THE PROVISIONS OF THE LATEST EDITION OF THE PHILIPPINE ELECTRICAL CODE, THE LAWS AND ORDINANCES OF THE LOCAL CODE, ENFORCING AUTHORITIES AND THE REQUIREMENTS OF THE LOCAL POWER COMPANY. THE ELECTRICAL WORK SHALL BE DONE UNDER THE DIRECT SUPERVISION OF A DULY REGISTERED ELECTRICAL ENGINEER.
2. THE CONTRACTOR SHALL SECURE ALL PERMITS AND PAY ALL FEES REQUIRED FOR THE WORK AND FURNISH THE OWNER, THROUGH THE ENGINEERS FINAL CERTIFICATES OF ELECTRICAL INSPECTION AND APPROVAL FROM PROPER GOVERNMENT AUTHORITIES FOR COMPLETED WORK.
3. THE POWER SERVICE VOLTAGE SHALL BE 240V, 1ø, 2W, 60 Hz. ALL MATERIALS TO BE USED AND EQUIPMENT TO BE INSTALLED SHALL BE BRAND NEW AND MUST BE OF THE APPROVED TYPES FOR THE PARTICULAR LOCATION AND PURPOSE INTENDED.
4. ALL WIRES SHALL BE COPPER, THERMOPLASTIC INSULATED TYPE THW, 600V, UNLESS OTHERWISE INDICATED. BRAND SHALL BE PHELPS DODGE, DURAFLEX OR APPROVED EQUAL.
5. UNLESS OTHERWISE INDICATED, THE MINIMUM SIZE OF CIRCUIT CONDUCTORS FROM STEEL POLE JUNCTION BOX/HANDHOLE TO EACH LUMINAIRE SHALL BE 2–3.5mm² THW & 1–3.5mm² TW(GND) INSIDE STEEL POLE.
6. UNLESS OTHERWISE INDICATED ALL CONDUIT PIPES SHALL BE UNPLASTICIZED POLYVINYL CHLORIDE CONDUIT SCHEDULE 40 OR POLYTHELENE PIPE AS MANUFACTURED BY MOLDEX, NELTEX OR APPROVED EQUAL. THE CONDUIT SIZE INDICATED IS THE INSIDE DIAMETER OF CONDUIT.
7. THE CONTRACTOR SHALL VERIFY AND COORDINATE TO LOCAL UTILITY COMPANY THE ACTUAL LOCATION OF THE SERVICE ENTRANCE FOR CONNECTION TO THE POWER SUPPLY. LIKEWISE, THE CONCRETE PEDESTAL SHALL BE PROVIDED BY THE CONTRACTOR.
8. ALL NON-CURRENT CARRYING PARTS OF EVERY ELECTRICAL EQUIPMENT/FIXTURE SHALL BE GROUNDED EFFECTIVELY.
9. UNDERGROUND CONDUIT RUN SHALL BE BURIED A MINIMUM OF 460mm BELOW GROUND LEVEL. UNLESS OTHERWISE INDICATED, CONDUIT RUN CROSSING STREET SHALL BE ENCASED IN STEEL REINFORCED 2500 PSI CONCRETE WITH MINIMUM OF 75mm (3 INCHES) THICKNESS COVERED ALL AROUND.
10. UNPROTECTED CONDUIT RISERS AND EXPOSED CONDUIT RUNS SHALL BE RIGID STEEL CONDUIT.
11. ALL PANELBOARD ENCLOSURES SHALL BE RAINTIGHT, NEMA 4X ENCLOSURE (1.5mm THICK MINIMUM GAUGE 14 FOR BOX AND COVER) WITH CONCEALED HINGE AND FLUSH LOCK KEY.
12. ALL STREET LUMINAIRE ASSEMBLY INCLUDING POLE AND FOUNDATION SHALL WITHSTAND WINDS UP TO 250 KPH PER HOUR GUSTING WITHOUT PERMANENT DEFORMATION.
13. DO NOT INSTALL POLE WITHOUT COMPLETE INSTALLATION/CONNECTION OF THE LUMINAIRE ASSEMBLY.
14. ALL CIRCUIT BREAKERS SHALL BE UL LISTED AS SWD (SWITCHING DUTY) SUITABLE FOR HIGH INITIAL INRUSH CURRENT FOR SWITCHING THE PRESSURE SODIUM LUMINAIRES. SIEMENS-ITE, SQUARE D, WESTINGHOUSE BRANDS SHALL BE USED OR APPROVED EQUIVALENT.
15. CONCRETE HANDHOLES OR OUTDOOR TYPE PULLBOXES OF CODE 1.61mm (GAGE 16) MINIMUM SHALL BE PROVIDED BY THE CONTRACTOR, WHENEVER NECESSARY, TO FACILITATE WIRE PULLING EVEN IF THESE ITEMS ARE NOT SHOWN IN THE PLANS.

NOTES:

1. UNLESS OTHERWISE SPECIFIED, TOP OF CONCRETE ENVELOPE SHALL NOT BE LESS THAN 460mm BELOW FINISHED GRADE LINE EXCEPT, THAT UNDER ROAD AND PAVEMENT, IT SHALL BE NOT LESS THAN 600mm.
2. PROVIDE STEEL REBAR REINFORCEMENT ON PAVED AREA.
3. ULTIMATE COMPRESSIVE STRENGTH OF CONCRETE F'c SHALL BE 13.8MPa (2000PSI)
4. REINFORCING BARS SHALL CONFORM TO PS GRADE 227, FY=227MPa (33,000PSI)
5. MAXIMUN SPACING OF PRECAST SPACER SHALL BE 1.5 METERS.
6. ALL DIMENSIONS ARE IN MILLIMETER, UNLESS OTHERWISE SPECIFIED.

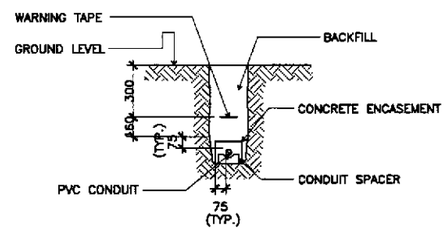

1 / ES-01 **TYPICAL DUCT SECTION**
NOT TO SCALE

ERNESTO M. ANTIOQUIA
ENGINEER
PTR. NO. 7403684 P.E.E. NO. 2813
ISSUED ON 01/03/2002 ISSUED AT CABUYAO, LAGUNA
T.I.N. 108-362-379

JICA
JAPAN INTERNATIONAL COOPERATION AGENCY
KATAHIRA & ENGINEERS INTERNATIONAL
YACHIYO ENGINEERING CO., LTD.

	DATE	SIGNATURE
DESIGNED	9/12/02	E. M. ANTIOQUIA
CHECKED	9/12/02	E. M. ANTIOQUIA
SUBMITTED	9/20/02	M. BOCHI TEAM LEADER

REPUBLIC OF THE PHILIPPINES
DEPARTMENT OF PUBLIC WORKS AND HIGHWAYS

PJHL – PMO	BUREAU OF DESIGN		OFFICE OF THE SECRETARY	
Submitted By:	Reviewed By:	Recommended By:	Recommended By: (See cover sheet for Signature)	Approved By: (See cover sheet for Signature/Approval)
DANILO C. TRAJANO	FE M. BARRIENTOS	GILBERTO S. REYES	MANUEL M. BONOAN	SIMEON A. DATUMANONG
Project Director	Chief, Mechanical–Elect'l Div.	OIC, Director IV	Undersecretary	Secretary

PROJECT AND LOCATION :
THE DETAILED DESIGN STUDY ON UPGRADING INTER-URBAN HIGHWAY SYSTEM ALONG THE PAN-PHILIPPINE HIGHWAY (Plaridel, Cabanatuan and San Jose Bypasses)
PLARIDEL BYPASS - CONTRACT PACKAGE I

SCALE : AS SHOWN FULL SIZE A1

SHEET CONTENTS : NOTES & LEGENDS, SCHEMATIC CONTROL DIAG. & DUCT SECTION (INITIAL STAGE)

SHEET NO. : ES-01

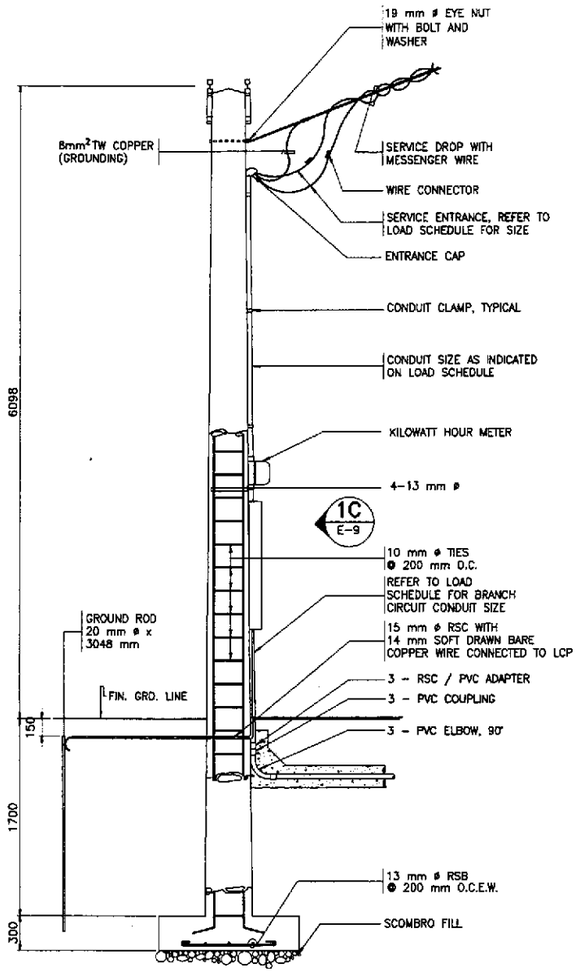

1A E-9 SECTION

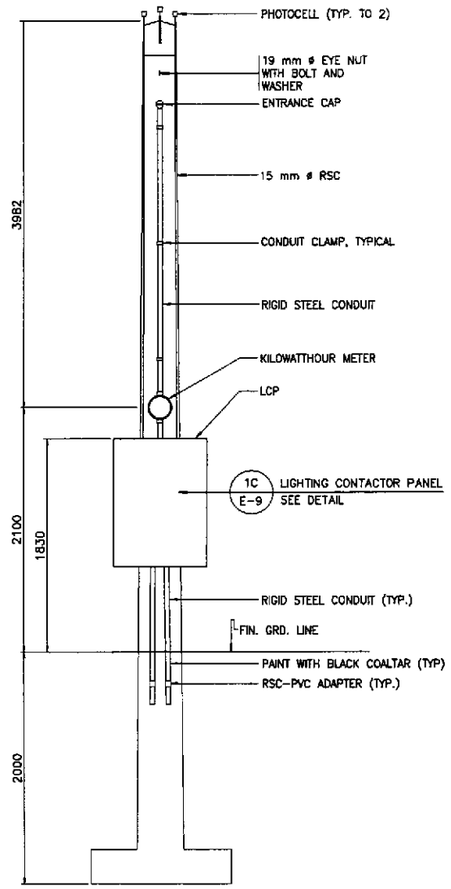

1B E-9 ELEVATION

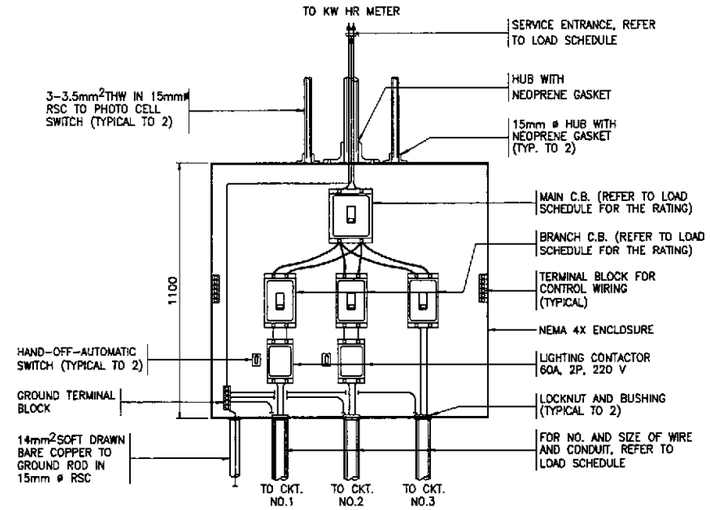

1C E-9 DETAIL
SCALE 1:20

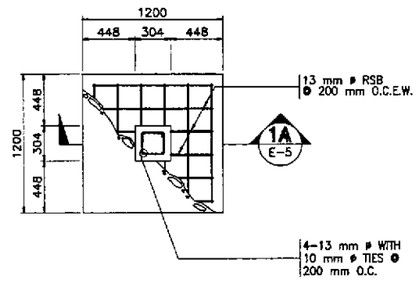

1D E-9 FOOTING PLAN

1 E-9 SERVICE POLE DETAILS
SCALE 1:20

ERNESTO M. ANTIOQUIA
ENGINEER
PTR. NO. 7403664 P.C.E. NO. 3813
ISSUED ON 01/02/2002 ISSUED AT CABUYAO, LAGUNA
T.I.N. 109-382-379

	DATE	SIGNATURE
DESIGNED	9/16/02	E. M. ANTIOQUIA
CHECKED	9/18/02	E. M. ANTIOQUIA
SUBMITTED	9/20/02	TEAM LEADER

JICA
JAPAN INTERNATIONAL COOPERATION AGENCY
KEI KATAHIRA & ENGINEERS INTERNATIONAL
YEC YACHIYO ENGINEERING CO., LTD.

REPUBLIC OF THE PHILIPPINES
DEPARTMENT OF PUBLIC WORKS AND HIGHWAYS

PJHL - PMO	BUREAU OF DESIGN		OFFICE OF THE SECRETARY	
Submitted By:	Reviewed By:	Recommended By:	Recommended By: (See cover sheet for Signature)	Aprroved By: (See cover sheet for Signature/Approval)
DANILO C. TRAJANO	FE M. BARRIENTOS	GILBERTO S. REYES	MANUEL M. BONDAN	SIMEON A. DATUMANONG
Project Director	Chief, Mechanical-Elect'l Div.	OIC, Director IV	Undersecretary	Secretary

PROJECT AND LOCATION :
THE DETAILED DESIGN STUDY ON UPGRADING INTER-URBAN HIGHWAY SYSTEM ALONG THE PAN-PHILIPPINE HIGHWAY (Plaridel, Cabanatuan and San Jose Bypasses)
PLARIDEL BYPASS - CONTRACT PACKAGE I

SCALE : AS SHOWN
FULL SIZE A1

SHEET CONTENTS : SERVICE POLE DETAILS
ALL INTERSECTIONS

SHEET NO. : ES-02

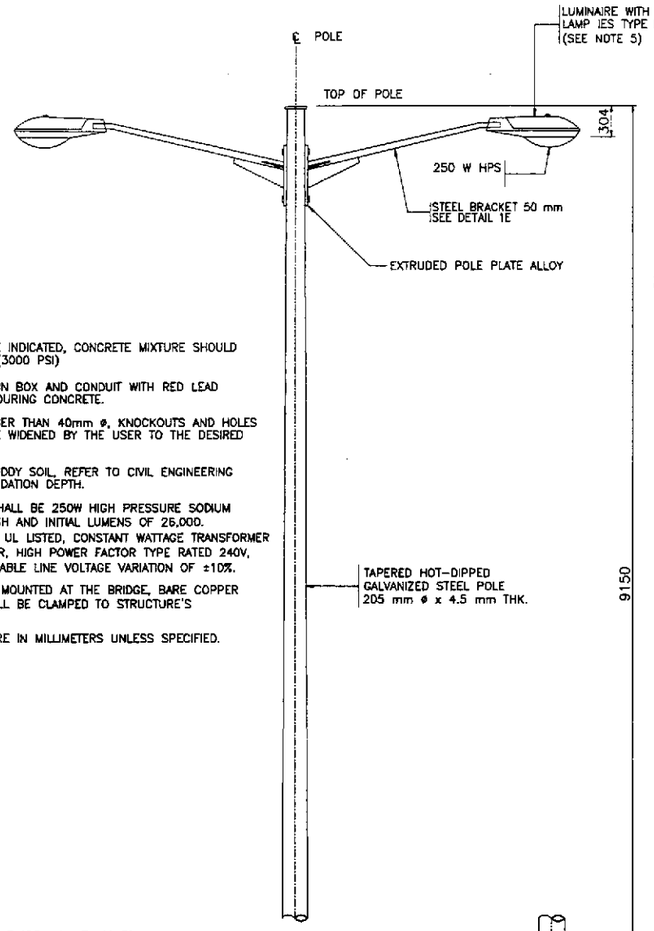

NOTES:

1. UNLESS OTHERWISE INDICATED, CONCRETE MIXTURE SHOULD BE 211 kg./cm (3000 PSI)
2. PAINT ALL JOINTS IN BOX AND CONDUIT WITH RED LEAD PRIMER BEFORE POURING CONCRETE.
3. FOR CONDUIT LARGER THAN 40mm ø, KNOCKOUTS AND HOLES SHALL HAVE TO BE WIDENED BY THE USER TO THE DESIRED DIAMETER.
4. FOR LOAM AND MUDDY SOIL, REFER TO CIVIL ENGINEERING FOR PROPER FOUNDATION DEPTH.
5. LUMINAIRE LAMP SHALL BE 250W HIGH PRESSURE SODIUM WITH DIFFUSE FINISH AND INITIAL LUMENS OF 26,000. BALLAST SHALL BE UL LISTED, CONSTANT WATTAGE TRANSFORMER CWA OR REGULATOR, HIGH POWER FACTOR TYPE RATED 240V, 60 Hz WITH ALLOWABLE LINE VOLTAGE VARIATION OF ±10%.
6. FOR STEEL POLES MOUNTED AT THE BRIDGE, BARE COPPER GROUND WIRE SHALL BE CLAMPED TO STRUCTURE'S REINFORCING BAR.
7. ALL DIMENSIONS ARE IN MILLIMETERS UNLESS SPECIFIED.

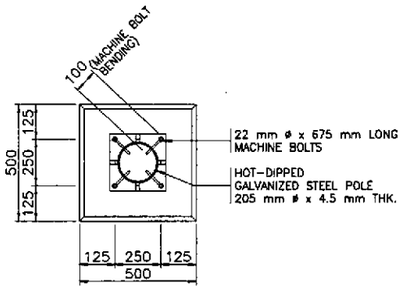

PLAN

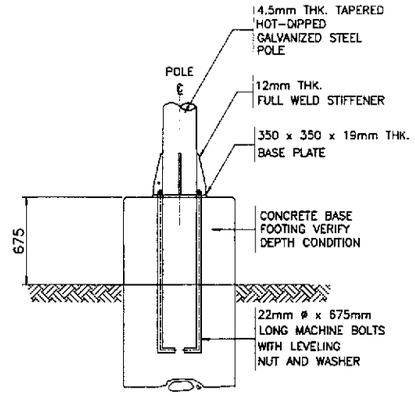

ELEVATION

1B ES-03 BASE PLATE DETAIL

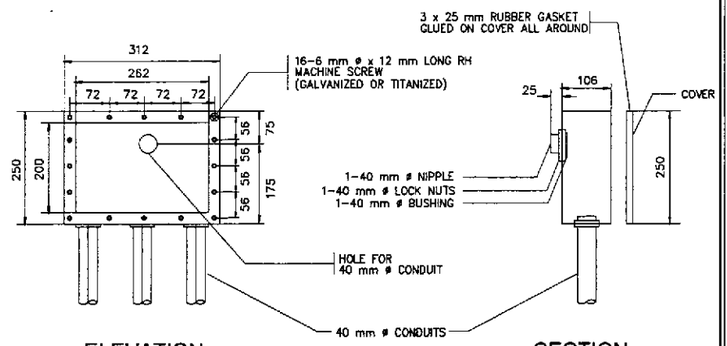

ELEVATION SECTION

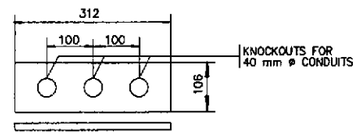

SECTION

MATERIAL:

JUNCTION BOX - 50 mm THICK CAST ALUMINUM FOR BOX AND COVER

ANCHOR BOLT - ASTM A-36

FINISH:

ANCHOR BOLT - ASTM A-153

1D ES-03 JUNCTION BOX DETAILS

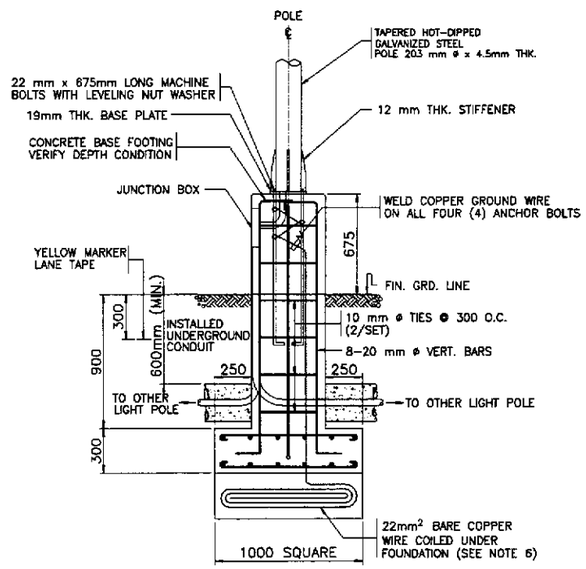

ELEVATION

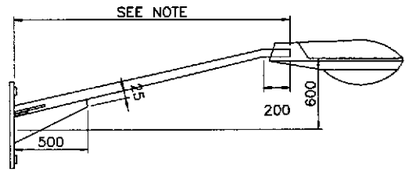

NOTE:

ARM LENGTH SHALL BE 3000mm UNLESS OTHERWISE INDICATED IN THE PLAN.

MATERIAL:

MAST ARM- B.I. PIPE AS PER PNS 26: 1984 (MEDIUM SERIES)
POLE SHAFT AS PER ASTM A-53 MOUNTING PLATE AND STIFFENERS

MACHINE BOLT- ANSI-C135.

FINISH:

HOT-DIP GALVANIZED PER LATEST EDITION OF ASTM A-123
MACHINE BOLT-ASTM A-153

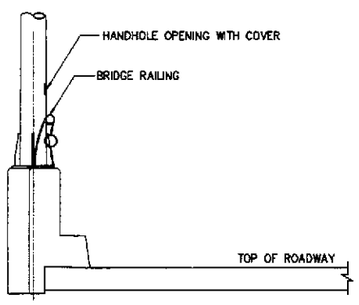

BRIDGE LEVEL

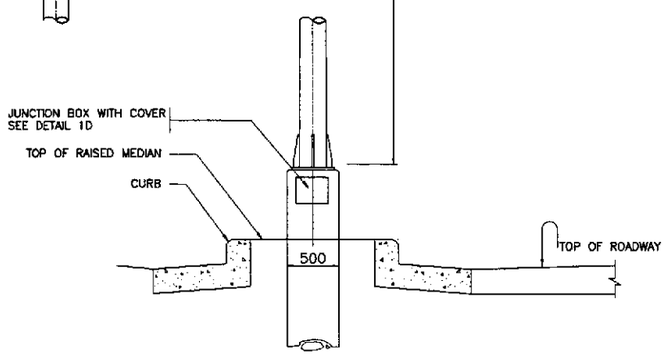

GROUND LEVEL

POLE SHAFT

LENGTH	BASE DIA.	POLE TOP DIA.
9000	205	115

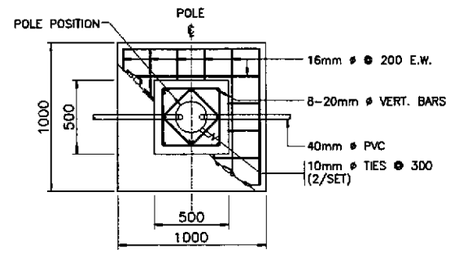

PLAN

1A ES-03 ELEVATION

1C ES-03 STANDARD FOOTING DETAIL

1E ES-03 MAST ARM DETAILS

1 ES-03 STREET LIGHT POLE DETAILS I

NOT TO SCALE

ERNESTO M. ANTIOQUIA
ENGINEER

PTR. NO. 7403664 P.E.E. NO. 2913
ISSUED ON 01/02/2002 ISSUED AT CABUYAO, LAGUNA
T.I.N. 109-382-379

JICA
JAPAN INTERNATIONAL COOPERATION AGENCY

KATAHIRA & ENGINEERS INTERNATIONAL
YACHIYO ENGINEERING CO., LTD.

	DATE	SIGNATURE
DESIGNED	9/16/02	E. M. ANTIOQUIA
CHECKED	9/18/02	E. M. ANTIOQUIA
SUBMITTED	9/20/02	N. MIGINO TEAM LEADER

REPUBLIC OF THE PHILIPPINES
DEPARTMENT OF PUBLIC WORKS AND HIGHWAYS

P.J.H.L. - PMO	BUREAU OF DESIGN		OFFICE OF THE SECRETARY	
Submitted By:	Reviewed By:	Recommended By:	Recommended By: (See cover sheet for Signature)	Approved By: (See cover sheet for Signature/Approval)
DANILO C. TRAJANO	FE M. BARRIENTOS	GILBERTO S. REYES	MANUEL M. BONDAN	SIMEON A. DATUMANONG
Project Director	Chief, Mechanical-Elect'l Div.	OIC, Director IV	Undersecretary	Secretary

PROJECT AND LOCATION :	SCALE :	SHEET CONTENTS :	SHEET NO. :
THE DETAILED DESIGN STUDY ON UPGRADING INTER-URBAN HIGHWAY SYSTEM ALONG THE PAN-PHILIPPINE HIGHWAY (Plaridel, Cabanatuan and San Jose Bypasses)	AS SHOWN	STREET LIGHT POLE DETAILS (INITIAL STAGE)	ES-03
PLARIDEL BYPASS - CONTRACT PACKAGE I	FULL SIZE A1		

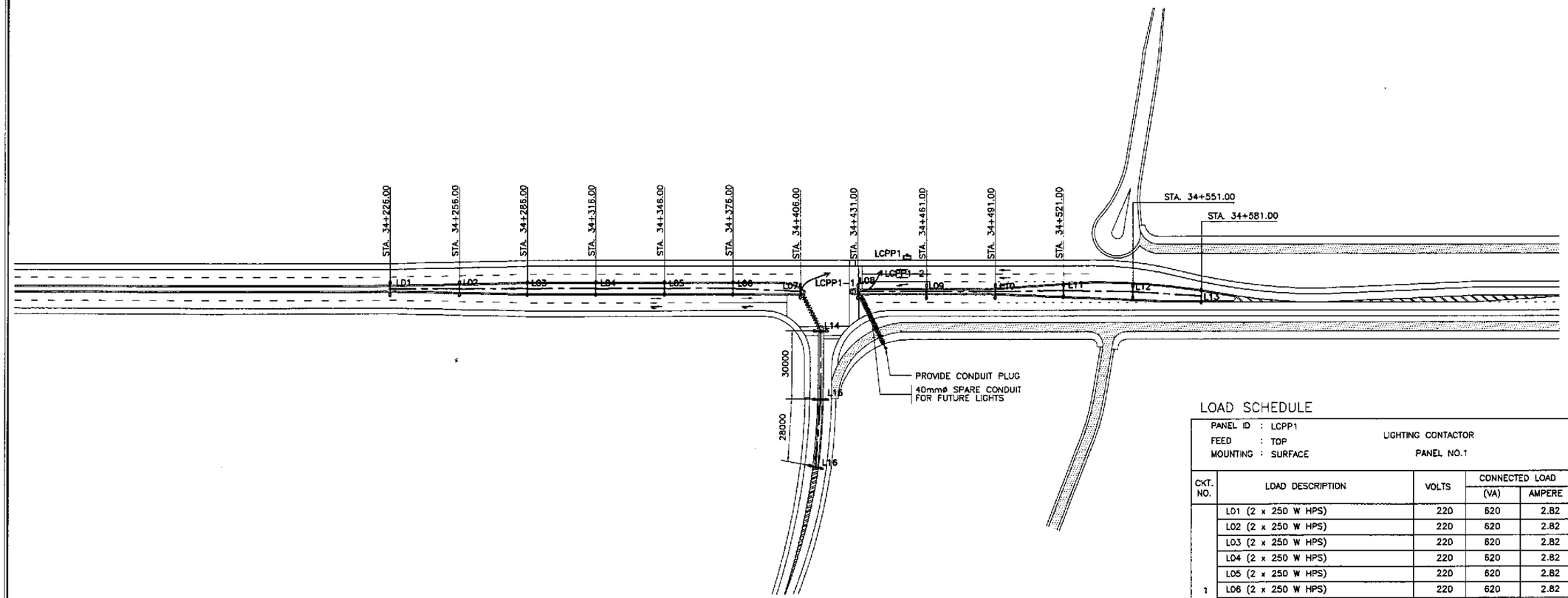

1 / EI-01 ROADWAY LIGHTING PLAN
SCALE 1:1000

LOAD SCHEDULE

PANEL ID : LCPP1
FEED : TOP
MOUNTING : SURFACE

LIGHTING CONTACTOR
PANEL NO.1

ENCLOSURE : NEMA 4X
MIN. KAIC : 10
MAIN CB : 100 AT, 100 AF, 2P

CKT. NO.	LOAD DESCRIPTION	VOLTS	CONNECTED LOAD (VA)	CONNECTED LOAD AMPERE	NO. & SIZE OF WIRES & CONDUIT	PROTECTION AT	PROTECTION AF	PROTECTION P
1	L01 (2 x 250 W HPS)	220	620	2.82	SEE NOTE 1			
	L02 (2 x 250 W HPS)	220	620	2.82	SEE NOTE 1			
	L03 (2 x 250 W HPS)	220	620	2.82	SEE NOTE 1			
	L04 (2 x 250 W HPS)	220	620	2.82	SEE NOTE 1			
	L05 (2 x 250 W HPS)	220	620	2.82	SEE NOTE 1			
	L06 (2 x 250 W HPS)	220	620	2.82	SEE NOTE 1			
	L07 (2 x 250 W HPS)	220	620	2.82	SEE NOTE 1			
	L14 (2 x 250 W HPS)	220	620	2.82	SEE NOTE 1			
	L15 (2 x 250 W HPS)	220	620	2.82	SEE NOTE 1			
	L16 (2 x 250 W HPS)	220	620	2.82	SEE NOTE 1			
	SUB-TOTAL		6200	28.20	2-30 mm^2 THW & 1-8.0 mm^2 TW(G) IN 40 mmø CONDUIT	40	100	2
2	L08 (2 x 250 W HPS)	220	620	2.82	SEE NOTE 1			
	L09 (2 x 250 W HPS)	220	620	2.82	SEE NOTE 1			
	L10 (2 x 250 W HPS)	220	620	2.82	SEE NOTE 1			
	L11 (2 x 250 W HPS)	220	620	2.82	SEE NOTE 1			
	L12 (2 x 250 W HPS)	220	620	2.82	SEE NOTE 1			
	L13 (2 x 250 W HPS)	220	620	2.82	SEE NOTE 1			
	L17 (1 x 250 W HPS) (FUTURE)	220	310	1.41	SEE NOTE 1			
	L18 (1 x 250 W HPS) (FUTURE)	220	310	1.41	SEE NOTE 1			
	L19 (1 x 250 W HPS) (FUTURE)	220	310	1.41	SEE NOTE 1			
	L20 (1 x 250 W HPS) (FUTURE)	220	310	1.41	SEE NOTE 1			
	L21 (1 x 250 W HPS) (FUTURE)	220	310	1.41	SEE NOTE 1			
	L22 (1 x 250 W HPS) (FUTURE)	220	310	1.41	SEE NOTE 1			
	L23 (1 x 250 W HPS) (FUTURE)	220	310	1.41	SEE NOTE 1			
	L24 (1 x 250 W HPS) (FUTURE)	220	310	1.41	SEE NOTE 1			
	L25 (1 x 250 W HPS) (FUTURE)	220	310	1.41	SEE NOTE 1			
	SUB-TOTAL		6510	29.61	2-30 mm^2 THW & 1-8.0 mm^2 TW(G) IN 40 mmø CONDUIT	40	100	2
3	TRAFFIC LIGHTS	220	3450	15	WIRES AND CONDUIT (BY OTHERS)	30	100	2
	TOTAL		16160	72.81	2-38 mm^2 THW IN 40 mmø CONDUIT	100	100	2

NOTE:

1. UNLESS OTHERWISE INDICATED, THE MINIMUM SIZE OF CIRCUIT CONDUCTORS FROM STEEL POLE JUNCTION BOX/HANDHOLE TO EACH LUMINAIRE SHALL BE 2-3.5mm^2 THW & 1-3.5mm^2 TW(GND) INSIDE STEEL POLE.
2. ARM LENGTH OF LIGHTING POLES SHALL BE 3000mm EXCEPT FOR LIGHTING POLES NO. L15 & L16 WHICH SHALL BE 1800mm.

ERNESTO M. ANTIOQUIA
ENGINEER
PTR. NO. 7403884 P.E.E. NO. 2813
ISSUED ON 01/02/2002 ISSUED AT CABUYAO, LAGUNA
T.I.N. 109-382-379

JICA
JAPAN INTERNATIONAL COOPERATION AGENCY
KEI KATAHIRA & ENGINEERS INTERNATIONAL
YEC YACHIYO ENGINEERING CO., LTD.

REPUBLIC OF THE PHILIPPINES
DEPARTMENT OF PUBLIC WORKS AND HIGHWAYS

	DATE	SIGNATURE	PJHL – PMO	BUREAU OF DESIGN		OFFICE OF THE SECRETARY	
DESIGNED	9/16/02	E. M. ANTIOQUIA	Submitted By:	Reviewed By:	Recommended By:	Recommended By: (See cover sheet for Signature)	Approved By: (See cover sheet for Signature/Approval)
CHECKED	9/18/02	E. M. ANTIOQUIA					
SUBMITTED	9/20/02	M. SINGH TEAM LEADER	DANILO C. TRAJANO Project Director	FE M. BARRIENTOS Chief, Mechanical-Elect'l Div.	GILBERTO S. REYES OIC, Director IV	MANUEL M. BONOAN Undersecretary	SIMEON A. DATUMANONG Secretary

PROJECT AND LOCATION :
THE DETAILED DESIGN STUDY ON UPGRADING INTER-URBAN HIGHWAY SYSTEM ALONG THE PAN-PHILIPPINE HIGHWAY (Plaridel, Cabanatuan and San Jose Bypasses)
PLARIDEL BYPASS - CONTRACT PACKAGE I

SCALE : 1:1000 FULL SIZE A1

SHEET CONTENTS :
ROADWAY LIGHTING PLAN AND LOAD SCHEDULE
INTERSECTION A-1 & C-1L (INITIAL STAGE)

SHEET NO. : EI-01

LOAD SCHEDULE

PANEL ID : LCPP2
FEED : TOP
MOUNTING : SURFACE

LIGHTING CONTACTOR
PANEL NO.2

ENCLOSURE : NEMA 4X
MIN. KAIC : 10
MAIN CB : 80 AT, 100 AF, 2P

CKT. NO.	LOAD DESCRIPTION	VOLTS	CONNECTED LOAD (VA)	CONNECTED LOAD AMPERE	NO. & SIZE OF WIRES & CONDUIT	PROTECTION AT	PROTECTION AF	PROTECTION P
1	L32 (2 x 250 W HPS)	220	620	2.82	SEE NOTE 1			
	L39 (2 x 250 W HPS)	220	620	2.82	SEE NOTE 1			
	L40 (1 x 250 W HPS)	220	310	1.41	SEE NOTE 1			
	L41 (1 x 250 W HPS)	220	310	1.41	SEE NOTE 1			
	L31 (2 x 250 W HPS)	220	620	2.82	SEE NOTE 1			
	L30 (2 x 250 W HPS)	220	620	2.82	SEE NOTE 1			
	L29 (2 x 250 W HPS)	220	620	2.82	SEE NOTE 1			
	L28 (2 x 250 W HPS)	220	620	2.82	SEE NOTE 1			
	L27 (2 x 250 W HPS)	220	620	2.82	SEE NOTE 1			
	L26 (2 x 250 W HPS)	220	620	2.82	SEE NOTE 1			
	SUB-TOTAL		5580	25.38	2-30 mm^2 THW & 1-8.0 mm^2 TW(G) IN 40 mmø CONDUIT	40	100	2
2	L44 (1 x 250 W HPS)	220	310	1.41	SEE NOTE 1			
	L43 (1 x 250 W HPS)	220	310	1.41	SEE NOTE 1			
	L42 (2 x 250 W HPS)	220	620	2.82	SEE NOTE 1			
	L33 (2 x 250 W HPS)	220	620	2.82	SEE NOTE 1			
	L34 (2 x 250 W HPS)	220	620	2.82	SEE NOTE 1			
	L35 (2 x 250 W HPS)	220	620	2.82	SEE NOTE 1			
	L36 (2 x 250 W HPS)	220	620	2.82	SEE NOTE 1			
	L37 (2 x 250 W HPS)	220	620	2.82	SEE NOTE 1			
	L38 (2 x 250 W HPS)	220	620	2.82	SEE NOTE 1			
	SUB-TOTAL		4960	22.56	2-30 mm^2 THW & 1-8.0 mm^2 TW(G) IN 40 mmø CONDUIT	30	100	2
3	TRAFFIC LIGHTS	220	3450	15	WIRES AND CONDUIT (BY OTHERS)	30	100	2
	TOTAL		13990	62.94	2-38 mm^2 THW IN 40 mmø CONDUIT	80	100	2

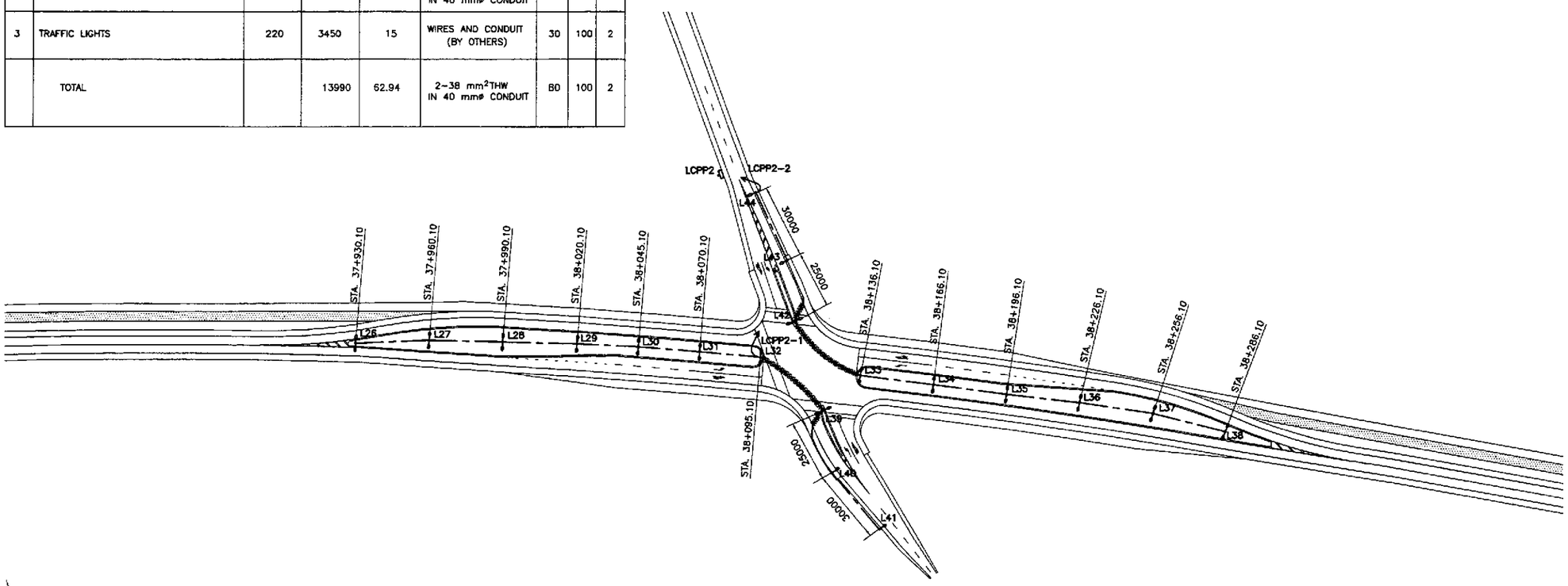

1 / EI-02 ROADWAY LIGHTING PLAN
SCALE 1:1000

NOTE:

1. UNLESS OTHERWISE INDICATED, THE MINIMUM SIZE OF CIRCUIT CONDUCTORS FROM STEEL POLE JUNCTION BOX/HANDHOLE TO EACH LUMINAIRE SHALL BE 2-3.5mm^2THW & 1-3.5mm^2TW(GND) INSIDE STEEL POLE.

ERNESTO M. ANTIOQUIA
ENGINEER
PTR. NO. 7403684 P.E.E. NO. 2813
ISSUED ON 01/03/2002 ISSUED AT CABUYAO, LAGUNA
T.I.N. 109-382-379

JICA
JAPAN INTERNATIONAL COOPERATION AGENCY
KEI KATAHIRA & ENGINEERS INTERNATIONAL
YEC YACHIYO ENGINEERING CO., LTD.

	DATE	SIGNATURE
DESIGNED	9/12/02	E. M. ANTIOQUIA
CHECKED	9/18/02	E. M. ANTIOQUIA
SUBMITTED	9/20/02	M. KIUCHI TEAM LEADER

REPUBLIC OF THE PHILIPPINES
DEPARTMENT OF PUBLIC WORKS AND HIGHWAYS

PJHL – PMO	BUREAU OF DESIGN		OFFICE OF THE SECRETARY	
Submitted By:	Reviewed By:	Recommended By:	Recommended By: (See cover sheet for Signature)	Approved By: (See cover sheet for Signature/Approval)
DANILO C. TRAJANO	FE M. BARRIENTOS	GILBERTO S. REYES	MANUEL M. BONOAN	SIMEON A. DATUMANONG
Project Director	Chief, Mechanical-Elect'l Div.	OIC, Director IV	Undersecretary	Secretary

PROJECT AND LOCATION :
THE DETAILED DESIGN STUDY ON UPGRADING INTER-URBAN HIGHWAY SYSTEM ALONG THE PAN-PHILIPPINE HIGHWAY (Plaridel, Cabanatuan and San Jose Bypasses)
PLARIDEL BYPASS - CONTRACT PACKAGE I

SCALE : 1:1000 FULL SIZE A1

SHEET CONTENTS :
ROADWAY LIGHTING PLAN AND LOAD SCHEDULE
INTERSECTION A-5 (INITIAL STAGE)

SHEET NO. : EI-02

LOAD SCHEDULE

PANEL ID : LCPP3
FEED : TOP
MOUNTING : SURFACE

LIGHTING CONTACTOR
PANEL NO.3

ENCLOSURE : NEMA 4X
MIN. KAIC : 10
MAIN CB : 100 AT, 100 AF, 2P

CKT. NO.	LOAD DESCRIPTION	VOLTS	CONNECTED LOAD (VA)	CONNECTED LOAD AMPERE	NO. & SIZE OF WIRES & CONDUIT	PROTECTION AT	PROTECTION AF	PROTECTION P
1	L60 (1 x 250 W HPS)	220	310	1.41	SEE NOTE 1			
	L59 (2 x 250 W HPS)	220	620	2.82	SEE NOTE 1			
	L58 (2 x 250 W HPS)	220	620	2.82	SEE NOTE 1			
	L57 (2 x 250 W HPS)	220	620	2.82	SEE NOTE 1			
	L50 (2 x 250 W HPS)	220	620	2.82	SEE NOTE 1			
	L49 (2 x 250 W HPS)	220	620	2.82	SEE NOTE 1			
	L48 (2 x 250 W HPS)	220	620	2.82	SEE NOTE 1			
	L47 (2 x 250 W HPS)	220	620	2.82	SEE NOTE 1			
	L46 (2 x 250 W HPS)	220	620	2.82	SEE NOTE 1			
	L45 (2 x 250 W HPS)	220	620	2.82	SEE NOTE 1			
	SUB-TOTAL		5890	26.79	2-30 mm^2 THW & 1-8.0 mm^2 TW(G) IN 40 mmø CONDUIT	40	100	2
	L51 (2 x 250 W HPS)	220	620	2.82	SEE NOTE 1			
2	L61 (2 x 250 W HPS)	220	620	2.82	SEE NOTE 1			
	L62 (2 x 250 W HPS)	220	620	2.82	SEE NOTE 1			
	L63 (1 x 250 W HPS)	220	310	1.41	SEE NOTE 1			
	L64 (1 x 250 W HPS)	220	310	1.41	SEE NOTE 1			
	L52 (2 x 250 W HPS)	220	620	2.82	SEE NOTE 1			
	L53 (2 x 250 W HPS)	220	620	2.82	SEE NOTE 1			
	L54 (2 x 250 W HPS)	220	620	2.82	SEE NOTE 1			
	L55 (2 x 250 W HPS)	220	620	2.82	SEE NOTE 1			
	L56 (2 x 250 W HPS)	220	620	2.82	SEE NOTE 1			
	L65 (1 x 250 W HPS)	220	310	1.41	SEE NOTE 1			
	L66 (1 x 250 W HPS)	220	310	1.41	SEE NOTE 1			
	L67 (1 x 250 W HPS)	220	310	1.41	SEE NOTE 1			
	L68 (1 x 250 W HPS)	220	310	1.41	SEE NOTE 1			
	SUB-TOTAL		6820	31.02	2-30 mm^2 THW & 1-8.0 mm^2 TW(G) IN 40 mmø CONDUIT	40	100	2
3	TRAFFIC LIGHTS	220	3450	15	WIRES AND CONDUIT (BY OTHERS)	30	100	2
	TOTAL		16160	72.81	2-38 mm^2 THW IN 40 mmø CONDUIT	100	100	2

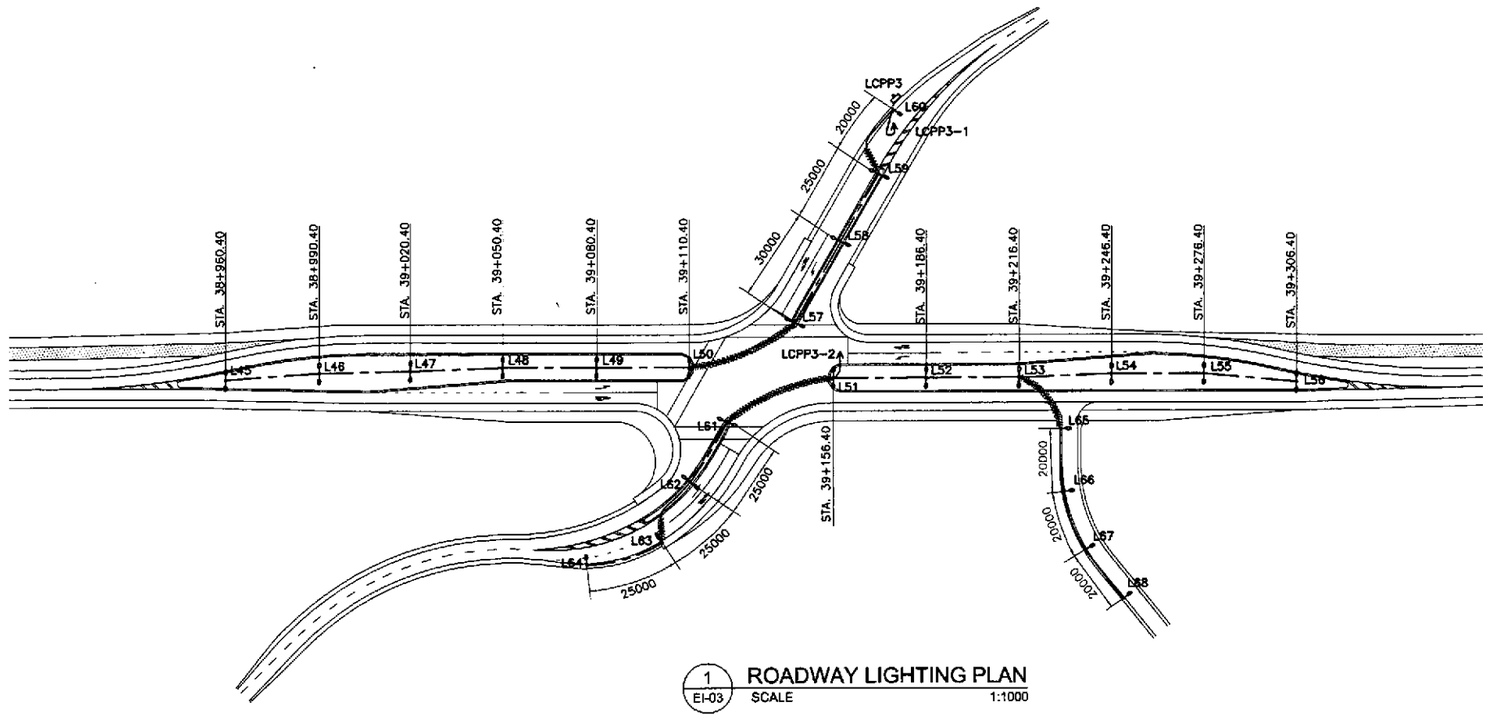

1 / EI-03 ROADWAY LIGHTING PLAN
SCALE 1:1000

NOTE:

1. UNLESS OTHERWISE INDICATED, THE MINIMUM SIZE OF CIRCUIT CONDUCTORS FROM STEEL POLE JUNCTION BOX/HANDHOLE TO EACH LUMINAIRE SHALL BE 2-3.5mm^2 THW & 1-3.5mm^2 TW(GND) INSIDE STEEL POLE.
2. ARM LENGTH OF LIGHTING POLES SHALL BE 3000mm EXCEPT FOR LIGHTING POLES NO. L65 TO L68 WHICH SHALL BE 1800mm.

ERNESTO M. ANTIOQUIA
ENGINEER
PTR. NO. 7403884 P.E.E. NO. 2913
ISSUED ON 01/02/2002 ISSUED AT CABUYAO, LAGUNA
T.I.N. 106-382-379

JICA
JAPAN INTERNATIONAL COOPERATION AGENCY
KATAHIRA & ENGINEERS INTERNATIONAL
YACHIYO ENGINEERING CO., LTD.

	DATE	SIGNATURE
DESIGNED	9/16/02	E. M. ANTIOQUIA
CHECKED	9/18/02	E. M. ANTIOQUIA
SUBMITTED	9/20/02	TEAM LEADER

REPUBLIC OF THE PHILIPPINES
DEPARTMENT OF PUBLIC WORKS AND HIGHWAYS

PJHL – PMO	BUREAU OF DESIGN		OFFICE OF THE SECRETARY	
Submitted By:	Reviewed By:	Recommended By:	Recommended By: (See cover sheet for Signature)	Approved By: (See cover sheet for Signature/Approval)
DANILO C. TRAJANO	FE M. BARRIENTOS	GILBERTO S. REYES	MANUEL M. BONDAN	SIMEON A. DATUMANONG
Project Director	Chief, Mechanical-Elect'l Div.	OIC, Director IV	Undersecretary	Secretary

PROJECT AND LOCATION :
THE DETAILED DESIGN STUDY ON UPGRADING INTER-URBAN HIGHWAY SYSTEM ALONG THE PAN-PHILIPPINE HIGHWAY (Plaridel, Cabanatuan and San Jose Bypasses)
PLARIDEL BYPASS - CONTRACT PACKAGE I

SCALE : 1:1000 FULL SIZE A1

SHEET CONTENTS :
ROADWAY LIGHTING PLAN AND LOAD SCHEDULE
INTERSECTION A-7 (INITIAL STAGE)

SHEET NO. : EI-03

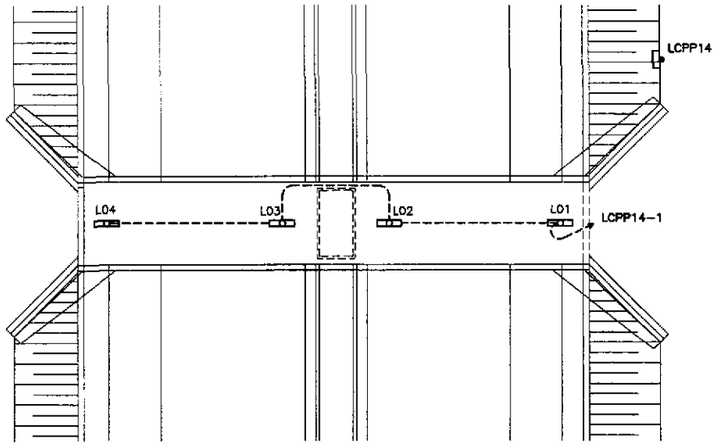

LIGHTING LAYOUT
1 / EI-04 B-0 (STA. 33+740.000)
NOT TO SCALE

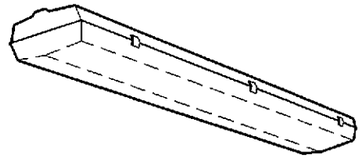

CEILING LUMINAIRE, SURFACE MOUNTED, IP56 (MINIMUM). HOUSING SHALL BE MADE FROM GLASS FIBRE REINFORCED POLYESTER RESIN. PATTERNED COVER SHALL BE MADE FROM POLYCARBONATE DIFFUSER. BALLAST SHALL BE UL LISTED, RAPID START HIGH POWER FACTOR TYPE.

	220	1 x 40W FLUORESCENT	SURFACE
SYMBOL	VOLT	LAMP	MOUNTING

2 / EI-04 LIGHTING FIXTURE SCHEDULE
NOT TO SCALE

LOAD SCHEDULE

PANEL ID : LCPP14
FEED : TOP
MOUNTING : SURFACE

LIGHTING CONTACTOR
PANEL NO.14

ENCLOSURE : NEMA 4X
MIN. KAIC : 10
MAIN CB : 20 AT, 100 AF, 2P

CKT. NO.	LOAD DESCRIPTION	VOLTS	CONNECTED LOAD (VA)	CONNECTED LOAD AMPERE	NO. & SIZE OF WIRES & CONDUIT	PROTECTION AT	PROTECTION AF	PROTECTION P
1	L01 (1 x 40 W FLUORESCENT LAMP)	220	50	0.23				
	L02 (1 x 40 W FLUORESCENT LAMP)	220	50	0.23				
	L03 (1 x 40 W FLUORESCENT LAMP) – FUTURE	220	50	0.23				
	L04 (1 x 40 W FLUORESCENT LAMP) – FUTURE	220	50	0.23				
	SUB-TOTAL		200	0.92	2-5.5 mm² THW & 1-3.5 mm² TW(G) IN 20 mmø CONDUIT			
	TOTAL		200	0.92	2-5.5 mm² THW IN 20 mmø CONDUIT	20	100	2

ERNESTO M. ANTIOQUIA
ENGINEER
PTR. NO. 7403684 P.E.E. NO. 2913
ISSUED ON 01/03/2002 ISSUED AT CABUYAO, LAGUNA
T.I.N. 109-382-272

JICA
JAPAN INTERNATIONAL COOPERATION AGENCY
KEI KATAHIRA & ENGINEERS INTERNATIONAL
YEC YACHIYO ENGINEERING CO., LTD.

	DATE	SIGNATURE
DESIGNED	9/16/02	E. M. ANTIOQUIA
CHECKED	9/18/02	E. M. ANTIOQUIA
SUBMITTED	9/20/02	G. KIKUCHI TEAM LEADER

REPUBLIC OF THE PHILIPPINES
DEPARTMENT OF PUBLIC WORKS AND HIGHWAYS

PJHL – PMO	BUREAU OF DESIGN		OFFICE OF THE SECRETARY	
Submitted By:	Reviewed By:	Recommended By:	Recommended By: (See cover sheet for Signature)	Approved By: (See cover sheet for Signature/Approval)
DANILO C. TRAJANO	FE M. BARRIENTOS	GILBERTO S. REYES	MANUEL M. BONOAN	SIMEON A. DATUMANONG
Project Director	Chief, Mechanical-Elect'l Div.	OIC, Director IV	Undersecretary	Secretary

PROJECT AND LOCATION :
THE DETAILED DESIGN STUDY ON UPGRADING INTER-URBAN HIGHWAY SYSTEM ALONG THE PAN-PHILIPPINE HIGHWAY (Plaridel, Cabanatuan and San Jose Bypasses)
PLARIDEL BYPASS - CONTRACT PACKAGE I

SCALE : NOT TO SCALE
FULL SIZE A1

SHEET CONTENTS :
LIGHTING LAYOUT, LOAD SCHEDULE & LIGHTING FIXTURE SCHEDULE
BOX CULVERT (B - 0)
(INITIAL STAGE)

SHEET NO. : EI-04

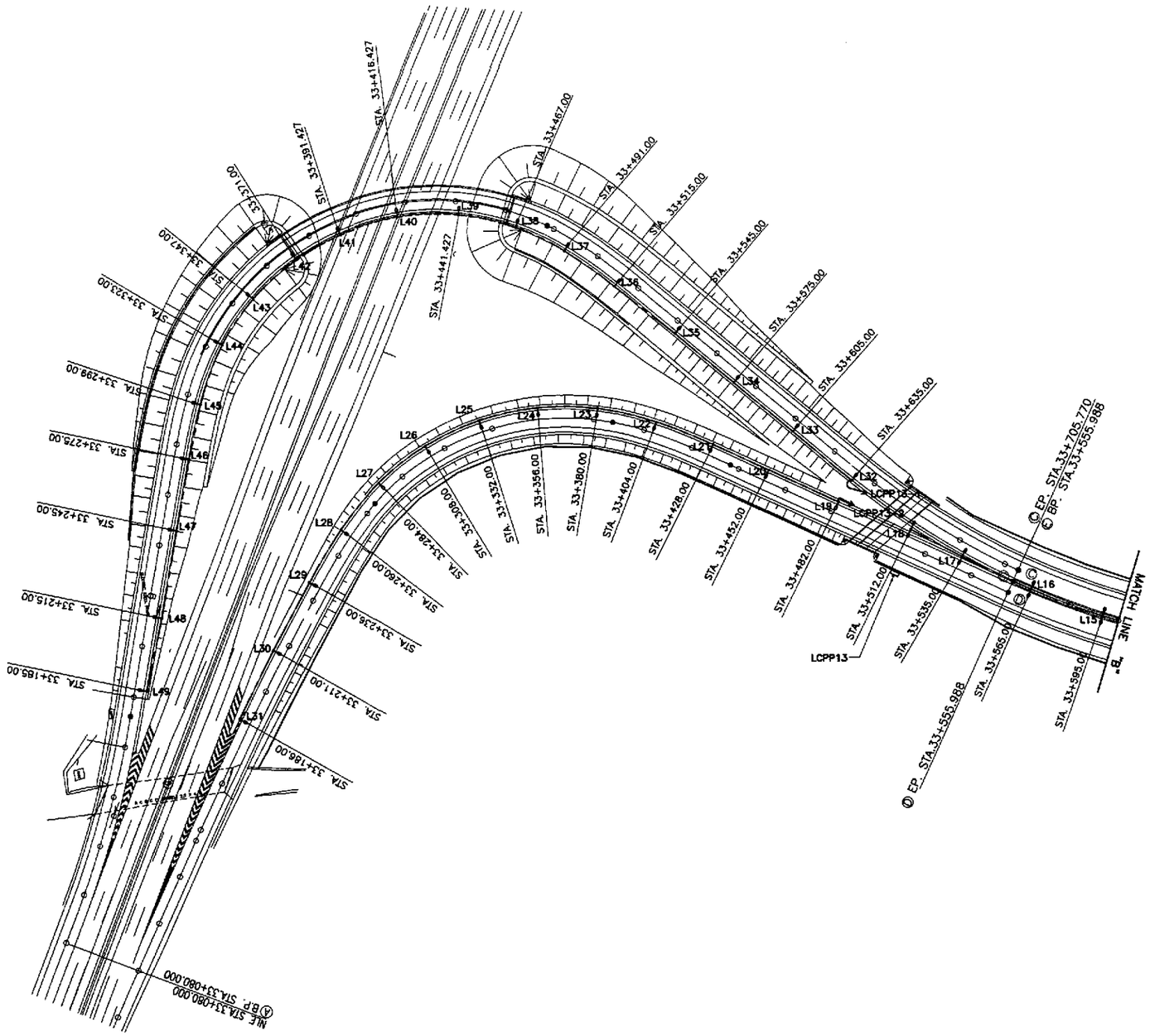

LOAD SCHEDULE

PANEL ID : LCPP13
FEED : TOP
MOUNTING : SURFACE

LIGHTING CONTACTOR PANEL NO.13

ENCLOSURE : NEMA 4X
MIN. KAIC : 10
MAIN CB : 60 AT, 100 AF, 2P

CKT. NO.	LOAD DESCRIPTION	VOLTS	CONNECTED LOAD (VA)	CONNECTED LOAD AMPERE	NO. & SIZE OF WIRES & CONDUIT	PROTECTION AT	PROTECTION AF	PROTECTION P
1	L32 (1 x 250 W HPS)	220	310	1.41	SEE NOTE 1			
	L33 (1 x 250 W HPS)	220	310	1.41	SEE NOTE 1			
	L34 (1 x 250 W HPS)	220	310	1.41	SEE NOTE 1			
	L35 (1 x 250 W HPS)	220	310	1.41	SEE NOTE 1			
	L36 (1 x 250 W HPS)	220	310	1.41	SEE NOTE 1			
	L37 (1 x 250 W HPS)	220	310	1.41	SEE NOTE 1			
	L38 (1 x 250 W HPS)	220	310	1.41	SEE NOTE 1			
	L39 (1 x 250 W HPS)	220	310	1.41	SEE NOTE 1			
	L40 (1 x 250 W HPS)	220	310	1.41	SEE NOTE 1			
	L41 (1 x 250 W HPS)	220	310	1.41	SEE NOTE 1			
	L42 (1 x 250 W HPS)	220	310	1.41	SEE NOTE 1			
	L43 (1 x 250 W HPS)	220	310	1.41	SEE NOTE 1			
	L44 (1 x 250 W HPS)	220	310	1.41	SEE NOTE 1			
	L45 (1 x 250 W HPS)	220	310	1.41	SEE NOTE 1			
	L46 (1 x 250 W HPS)	220	310	1.41	SEE NOTE 1			
	L47 (1 x 250 W HPS)	220	310	1.41	SEE NOTE 1			
	L48 (1 x 250 W HPS)	220	310	1.41	SEE NOTE 1			
	L49 (1 x 250 W HPS)	220	310	1.41	SEE NOTE 1			
	SUB-TOTAL		5580	25.38	2-50 mm THW & 1-8.0 mm TW(G) IN 40 mmø CONDUIT	40	100	2
	L19 (1 x 250 W HPS)	220	310	1.41	SEE NOTE 1			
2	L20 (1 x 250 W HPS)	220	310	1.41	SEE NOTE 1			
	L21 (1 x 250 W HPS)	220	310	1.41	SEE NOTE 1			
	L22 (1 x 250 W HPS)	220	310	1.41	SEE NOTE 1			
	L23 (1 x 250 W HPS)	220	310	1.41	SEE NOTE 1			
	L24 (1 x 250 W HPS)	220	310	1.41	SEE NOTE 1			
	L25 (1 x 250 W HPS)	220	310	1.41	SEE NOTE 1			
	L26 (1 x 250 W HPS)	220	310	1.41	SEE NOTE 1			
	L27 (1 x 250 W HPS)	220	310	1.41	SEE NOTE 1			
	L28 (1 x 250 W HPS)	220	310	1.41	SEE NOTE 1			
	L29 (1 x 250 W HPS)	220	310	1.41	SEE NOTE 1			
	L30 (1 x 250 W HPS)	220	310	1.41	SEE NOTE 1			
	L31 (1 x 250 W HPS)	220	310	1.41	SEE NOTE 1			
	SUB-TOTAL		4030	18.33	2-30 mm² THW & 1-8.0 mm² TW(G) IN 40mmø CONDUIT	30	100	2
	TOTAL		9610	43.71	2-50 mm² THW IN 40mmø CONDUIT	60	100	2

1 / EB-01 **ROADWAY LIGHTING PLAN**
SCALE 1:1000

NOTE:

1. UNLESS OTHERWISE INDICATED, THE MINIMUM SIZE OF CIRCUIT CONDUCTORS FROM STEEL POLE JUNCTION BOX/HANDHOLE TO EACH LUMINAIRE SHALL BE 2-3.5mm² THW AND 1-3.5mm² TW(GND) INSIDE STEEL POLE.

ERNESTO M. ANTIOQUIA
ENGINEER
PTR. NO. 7403684 P.E.E. NO. 2913
ISSUED ON 01/03/2002 ISSUED AT CABUYAO, LAGUNA
T.I.N. 108-382-379

JICA
JAPAN INTERNATIONAL COOPERATION AGENCY
KATAHIRA & ENGINEERS INTERNATIONAL
YACHIYO ENGINEERING CO., LTD.

	DATE	SIGNATURE
DESIGNED	9/16/02	E. M. ANTIOQUIA
CHECKED	9/18/02	E. M. ANTIOQUIA
SUBMITTED	9/20/02	TEAM LEADER

REPUBLIC OF THE PHILIPPINES
DEPARTMENT OF PUBLIC WORKS AND HIGHWAYS

PJHL - PMO	BUREAU OF DESIGN		OFFICE OF THE SECRETARY	
Submitted By:	Reviewed By:	Recommended By:	Recommended By: (See cover sheet for Signature)	Approved By: (See cover sheet for Signature/Approval)
DANILO C. TRAJANO	FE M. BARRIENTOS	GILBERTO S. REYES	MANUEL M. BONDAN	SIMEON A. DATUMANONG
Project Director	Chief, Mechanical-Elect'l Div.	OIC, Director IV	Undersecretary	Secretary

PROJECT AND LOCATION :
THE DETAILED DESIGN STUDY ON UPGRADING INTER-URBAN HIGHWAY SYSTEM ALONG THE PAN-PHILIPPINE HIGHWAY (Plaridel, Cabanatuan and San Jose Bypasses)
PLARIDEL BYPASS - CONTRACT PACKAGE I

SCALE : AS SHOWN
FULL SIZE A1

SHEET CONTENTS :
INTERCHANGE RAMP
ROADWAY LIGHTING PLAN AND LOAD SCHEDULE
(RAMP C)

SHEET NO. : EB-01

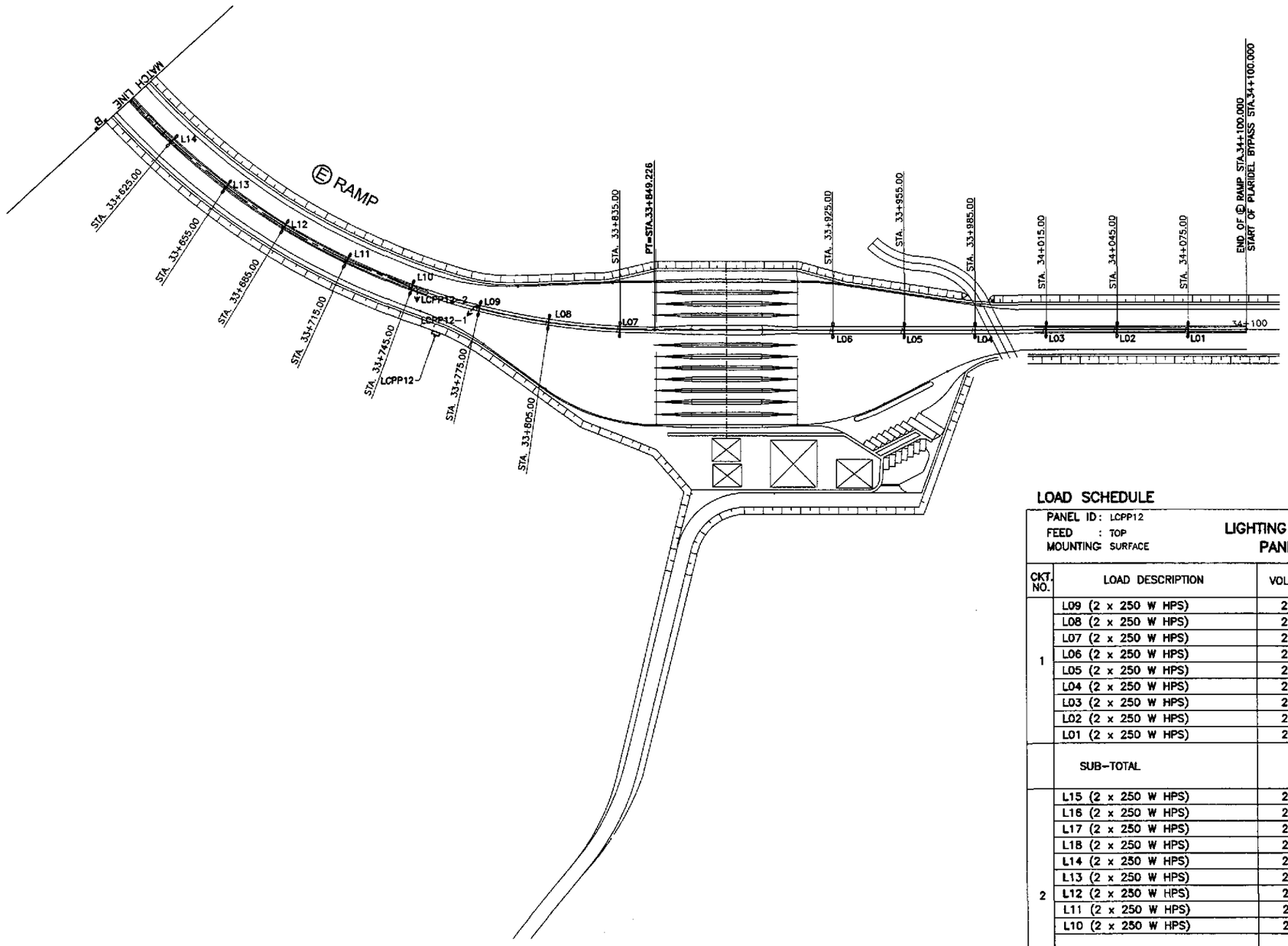

1 / EB-02 ROADWAY LIGHTING PLAN

SCALE 1:1000

LOAD SCHEDULE

PANEL ID : LCPP12
FEED : TOP
MOUNTING : SURFACE

LIGHTING CONTACTOR PANEL NO.12

ENCLOSURE : NEMA 4X
MIN. KAIC : 10
MAIN CB : 70 AT, 100 AF, 2P

CKT. NO.	LOAD DESCRIPTION	VOLTS	CONNECTED LOAD (VA)	CONNECTED LOAD AMPERE	NO. & SIZE OF WIRES & CONDUIT	PROTECTION AT	PROTECTION AF	PROTECTION P
1	L09 (2 x 250 W HPS)	220	620	2.82	SEE NOTE 1			
	L08 (2 x 250 W HPS)	220	620	2.82	SEE NOTE 1			
	L07 (2 x 250 W HPS)	220	620	2.82	SEE NOTE 1			
	L06 (2 x 250 W HPS)	220	620	2.82	SEE NOTE 1			
	L05 (2 x 250 W HPS)	220	620	2.82	SEE NOTE 1			
	L04 (2 x 250 W HPS)	220	620	2.82	SEE NOTE 1			
	L03 (2 x 250 W HPS)	220	620	2.82	SEE NOTE 1			
	L02 (2 x 250 W HPS)	220	620	2.82	SEE NOTE 1			
	L01 (2 x 250 W HPS)	220	620	2.82	SEE NOTE 1			
	SUB-TOTAL		5580	25.38	2-30 mm² THW & 1-8.0 mm² TW(G) IN 40 mmø CONDUIT	40	100	2
2	L15 (2 x 250 W HPS)	220	620	2.82	SEE NOTE 1			
	L16 (2 x 250 W HPS)	220	620	2.82	SEE NOTE 1			
	L17 (2 x 250 W HPS)	220	620	2.82	SEE NOTE 1			
	L18 (2 x 250 W HPS)	220	620	2.82	SEE NOTE 1			
	L14 (2 x 250 W HPS)	220	620	2.82	SEE NOTE 1			
	L13 (2 x 250 W HPS)	220	620	2.82	SEE NOTE 1			
	L12 (2 x 250 W HPS)	220	620	2.82	SEE NOTE 1			
	L11 (2 x 250 W HPS)	220	620	2.82	SEE NOTE 1			
	L10 (2 x 250 W HPS)	220	620	2.82	SEE NOTE 1			
	SUB-TOTAL		5580	25.38	2-30 mm² THW & 1-8.0 mm² TW(G) IN 40 mmø CONDUIT	40	100	2
	TOTAL		11160	50.76	2-38 mm² THW IN 40 mmø CONDUIT	70	100	2

NOTE:

1. UNLESS OTHERWISE INDICATED, THE MINIMUM SIZE OF CIRCUIT CONDUCTORS FROM STEEL POLE JUNCTION BOX/HANDHOLE TO EACH LUMINAIRE SHALL BE 2-3.5mm² THW AND 1-3.5mm² TW(GND) INSIDE STEEL POLE.

ERNESTO M. ANTIOQUIA
ENGINEER

PTR. NO. 7463664 P.E.E. NO. 2213
ISSUED ON 01/02/2002 ISSUED AT CABUYAO, LAGUNA
T.I.N. 109-352-379

JICA
JAPAN INTERNATIONAL COOPERATION AGENCY

KEI KATAHIRA & ENGINEERS INTERNATIONAL
YEC YACHIYO ENGINEERING CO., LTD.

	DATE	SIGNATURE
DESIGNED	9/16/02	E. M. ANTIOQUIA
CHECKED	9/20/02	E. M. ANTIOQUIA
SUBMITTED	9/20/02	TEAM LEADER

REPUBLIC OF THE PHILIPPINES
DEPARTMENT OF PUBLIC WORKS AND HIGHWAYS

PJHL - PMO	BUREAU OF DESIGN		OFFICE OF THE SECRETARY	
Submitted By:	Reviewed By:	Recommended By:	Recommended By: (See cover sheet for Signature)	Approved By: (See cover sheet for Signature/Approved)
DANILO C. TRAJANO	FE M. BARRIENTOS	GILBERTO S. REYES	MANUEL M. BONOAN	SIMEON A. DATUMANONG
Project Director	Chief, Mechanical-Elect'l Div.	OIC, Director IV	Undersecretary	Secretary

PROJECT AND LOCATION :
THE DETAILED DESIGN STUDY ON UPGRADING INTER-URBAN HIGHWAY SYSTEM ALONG THE PAN-PHILIPPINE HIGHWAY (Plaridel, Cabanatuan and San Jose Bypasses)
PLARIDEL BYPASS - CONTRACT PACKAGE I

SCALE : AS SHOWN
FULL SIZE A1

SHEET CONTENTS :
INTERCHANGE RAMP
ROADWAY LIGHTING PLAN AND LOAD SCHEDULE
(RAMP E)

SHEET NO. : EB-02