DRAINAGE

SCHEDULE OF DRAINAGE STRUCTURES

WATERSHED NO.	WATERSHED Q (cms)	STATION (kms)	SKEW	FINISHED GRADE ELEV. (m)	CULVERT CHARACTERISTICS: INVERT ELEVATION (m) LEFT	INVERT ELEVATION (m) CENTER	INVERT ELEVATION (m) RIGHT	SLOPE	RCPC (mm dia.)	RCBC (SxH) (mxm)	LENGTH (m) LEFT	LENGTH (m) RIGHT	LENGTH (m) TOTAL	STRUCTURES: INLET	STRUCTURES: OUTLET	CULVERT FLOW CAPACITY (cms)	REMARKS	RECOMMENDATION
		INTERCHANGE RAMP C																
1	3.45	33+260		9.70	2.56	2.67	2.76	0.00625	1-910		12.00	11.00	23.00	F	F	1.47	STORM WATER DRAINAGE	INSTALL, PROVIDE FLARED TYPE HEADWALLS
		INTERCHANGE RAMP D																
		33+156		4.11	0.002	0.205	0.39	0.005		2-4.00x2.50	30.70	31.00	61.70	W	W	84.28	EXISTING RCBC FOR EXTENSION	EXT. RCBC 8.5m. @ RTSD. 6.7 LTSD. PROV. W.WALLS.
		33+320		4.57	2.45	2.39	2.32	0.00765	2-910		8.50	8.50	17.00	F	F	1.63	STORM WATER DRAINAGE	INSTALL, PROVIDE FLARED TYPE HEADWALLS
2	39.12	33+500	15° LF	5.10	1.80	1.75	1.70	0.00321		3-3.00x2.40	15.90	15.30	31.20	W	W	64.35	EXISTING WATERWAY	CONSTRUCT RCBC, PROVIDE WINGWALLS
		INTERCHANGE RAMP E																
3	20.72	34+000	23° RF	7.05	2.85	2.90	2.95	0.00362		2-3.00x210	14.00	13.80	27.80	W	W	45.63	EXISTING WATERWAY	CONSTRUCT RCBC, PROVIDE WINGWALLS
		MAIN BYPASS																
4	0.96	34+200		5.60	3.40	3.35	3.30	0.00370	1-910		13.50	13.50	27.00	F	F	1.13	IRRIGATION STRUCTURE	INSTALL, PROVIDE FLARED TYPE HEADWALLS
		34+286		6.03	3.75	3.68	3.60	0.00469	1-910		14.50	17.50	32.00	F	F	1.28	IRRIGATION STRUCTURE	INSTALL, PROVIDE FLARED TYPE HEADWALLS
		34+450		6.85	4.25	4.21	4.15	0.00244	1-910		15.50	25.50	41.00	F	F	0.92	IRRIGATION STRUCTURE	INSTALL, PROVIDE FLARED TYPE HEADWALLS
5	8.83	34+555	10° LF	7.20	4.40	4.50	4.60	0.00392	1-910		26.00	25.00	51.00	F	F	1.17	STORM WATER DRAINAGE	INSTALL, PROVIDE FLARED TYPE HEADWALLS
		34+635		6.92	4.65	4.79	4.93	0.00583	1-910		24.50	23.50	48.00	F	F	1.42	STORM WATER DRAINAGE	INSTALL, PROVIDE FLARED TYPE HEADWALLS
		34+715		6.54	4.18	4.22	4.25	0.00149	1-1070		23.50	23.50	47.00	F	F	1.11	IRRIGATION STRUCTURE	INSTALL, PROVIDE FLARED TYPE HEADWALLS
		34+775		6.58	3.50	3.55	3.60	0.00212		2-2.40x1.80	23.60	23.50	47.10	W	W	21.30	IRRIGATION STRUCTURE	CONSTRUCT RCBC, PROVIDE WINGWALLS
6	2.86	34+900	9° LF	5.75	3.65	3.73	3.80	0.00300	1-910		25.00	25.00	50.00	F	F	1.02	STORM WATER DRAINAGE	INSTALL, PROVIDE FLARED TYPE HEADWALLS
		35+135		6.18	3.95	4.08	4.20	0.00532	1-910		23.50	23.50	47.00	F	F	1.36	STORM WATER DRAINAGE	INSTALL, PROVIDE FLARED TYPE HEADWALLS
		35+380	24° LF	5.80	3.30	3.43	3.56	0.00500	1-910		26.00	26.00	52.00	F	F	1.32	IRRIGATION STRUCTURE	INSTALL, PROVIDE FLARED TYPE HEADWALLS
7	2.17	35+535		5.48	3.15	3.20.	3.25	0.00208	1-910		24.00	24.00	48.00	F	F	0.85	STORM WATER DRAINAGE	INSTALL, PROVIDE FLARED TYPE HEADWALLS
		35+670	10° LF	5.62	2.50	2.55	2.60	0.00200	2-910		25.00	25.00	50.00	F	F	1.67	IRRIGATION STRUCTURE	INSTALL, PROVIDE FLARED TYPE HEADWALLS
8	3.15	35+825	25° LF	4.82	2.54	2.75	2.64	0.00192	1-1070		26.50	25.50	52.00	F	F	1.34	IRRIGATION STRUCTURE	INSTALL, PROVIDE FLARED TYPE HEADWALLS
		35+965		5.48	2.90	2.98	3.05	0.00306	1-910		25.00	24.00	49.00	F	F	1.16	IRRIGATION STRUCTURE	INSTALL, PROVIDE FLARED TYPE HEADWALLS
		36+055	15° RF	5.51	3.05	3.10	3.15	0.00192	1-910		27.00	25.00	52.00	F	F	0.88	IRRIGATION STRUCTURE	INSTALL, PROVIDE FLARED TYPE HEADWALLS
9	9.56	36+075	15° RF	5.47	3.05	3.13	3.20	0.00300	1-910		25.50	24.50	50.00	F	F	1.02	IRRIGATION STRUCTURE	INSTALL, PROVIDE FLARED TYPE HEADWALLS
		36+125	12° RF	5.28	1.10	1.15	1.20	0.00205		2-3.00x2.75	24.70	24.10	48.80	W	W	48.82	IRRIGATION STRUCTURE	CONSTRUCT RCBC, PROVIDE WINGWALLS
		36+255	15° RF	5.47	3.40	3.45	3.50	0.00200	1-910		26.00	24.00	50.00	F	F	0.83	IRRIGATION STRUCTURE	INSTALL, PROVIDE FLARED TYPE HEADWALLS
10	2.18	36+285	15° RF	5.61	3.35	3.40	3.45	0.00313	1-910		15.50	16.50	32.00	F	F	1.04	IRRIGATION STRUCTURE	INSTALL, PROVIDE FLARED TYPE HEADWALLS
		36+365		5.85	3.35	3.40	3.45	0.00323	1-910		16.00	15.00	31.00	F	F	1.08	IRRIGATION STRUCTURE	INSTALL, PROVIDE FLARED TYPE HEADWALLS
		36+445		5.68	3.45	3.50	3.55	0.00370	1-910		14.00	13.00	27.00	F	F	1.13	IRRIGATION STRUCTURE	INSTALL, PROVIDE FLARED TYPE HEADWALLS
		36+525		5.61	3.58	3.62	3.65	0.00259	1-910		14.00	13.00	27.00	F	F	0.95	IRRIGATION STRUCTURE	INSTALL, PROVIDE FLARED TYPE HEADWALLS
		36+565		6.01	3.50	3.55	3.60	0.00357	1-910		14.50	13.50	28.00	F	F	1.11	IRRIGATION STRUCTURE	INSTALL, PROVIDE FLARED TYPE HEADWALLS
11	1.78	36+660		7.23	4.00	4.05	4.10	0.00333	1-910		15.50	14.50	30.00	F	F	1.08	IRRIGATION STRUCTURE	INSTALL, PROVIDE FLARED TYPE HEADWALLS
		36+890		6.51	4.25	4.30	4.35	0.00370	1-910		14.00	13.00	27.00	F	F	1.13	IRRIGATION STRUCTURE	INSTALL, PROVIDE FLARED TYPE HEADWALLS
12	1.54	37+040		7.01	5.00	5.05	5.10	0.00370	1-910		14.00	13.00	27.00	F	F	1.13	STORM WATER DRAINAGE	INSTALL, PROVIDE FLARED TYPE HEADWALLS
		37+223	22° RF	7.15	5.10	5.15	5.20	0.00263	1-910		20.50	17.50	38.00	F	F	0.96	STORM WATER DRAINAGE	INSTALL, PROVIDE FLARED TYPE HEADWALLS
13	2.76	37+244	22° RF	7.25	5.35	5.36	5.38	0.00086	1-910		17.00	18.00	35.00	F	F	0.55	STORM WATER DRAINAGE	INSTALL, PROVIDE FLARED TYPE HEADWALLS
		37+335	10° LF	7.71	5.70	5.75	5.80	0.00312	1-910		16.50	15.50	32.00	F	F	1.04	IRRIGATION STRUCTURE	INSTALL, PROVIDE FLARED TYPE HEADWALLS
		37+465		8.00	5.75	5.80	5.85	0.00370	1-910		13.50	13.50	27.00	F	F	1.13	IRRIGATION STRUCTURE	INSTALL, PROVIDE FLARED TYPE HEADWALLS
		37+530	25° RF	8.54	5.80	5.85	5.90	0.00323	1-910		16.00	15.00	31.00	F	F	1.06	IRRIGATION STRUCTURE	INSTALL, PROVIDE FLARED TYPE HEADWALLS
14	3.28	37+728	28° RF	9.27	5.65	5.70	5.75	0.00294	1-910		17.50	16.50	34.00	F	F	1.14	IRRIGATION STRUCTURE	INSTALL, PROVIDE FLARED TYPE HEADWALLS
		37+852	30° RF	8.05	5.65	5.70	5.75	0.00323	1-910		16.00	15.00	31.00	F	F	1.20	IRRIGATION STRUCTURE	INSTALL, PROVIDE FLARED TYPE HEADWALLS
		38+090	26° RF	8.65	6.15	6.20	6.25	0.00233	1-910		22.50	20.50	43.00	F	F	1.02	STORM WATER DRAINAGE	INSTALL, PROVIDE FLARED TYPE HEADWALLS
15	1.19	38+140	26° RF	8.70	6.00	6.05	6.10	0.00238	1-910		21.50	20.50	42.00	F	F	0.91	IRRIGATION STRUCTURE	INSTALL, PROVIDE FLARED TYPE HEADWALLS
		38+195		8.57	5.90	5.95	6.00	0.00270	1-910		19.00	18.00	37.00	F	F	0.97	IRRIGATION STRUCTURE	INSTALL, PROVIDE FLARED TYPE HEADWALLS
16	0.79	38+414	10° RF	8.72	6.30	6.35	6.40	0.00357	1-910		14.00	14.00	28.00	F	F	1.11	IRRIGATION STRUCTURE	INSTALL, PROVIDE FLARED TYPE HEADWALLS
		38+590	15° LF	9.11	6.65	6.70	6.75	0.00370	1-910		13.50	13.50	27.00	F	F	1.13	IRRIGATION STRUCTURE	INSTALL, PROVIDE FLARED TYPE HEADWALLS
		38+690	10° LF	8.71	6.55	6.60	6.65	0.00370	1-910		13.50	13.50	27.00	F	F	1.13	STORM WATER DRAINAGE	INSTALL, PROVIDE FLARED TYPE HEADWALLS
17	7.34	38+720	7° LF	8.69	5.85	5.80	5.75	0.00403		2-3.00x2.10	12.30	12.50	24.80	W	W	47.74	IRRIGATION STRUCTURE	CONSTRUCT RCBC, PROVIDE WINGWALLS
		38+862	28° LF	9.31	7.05	7.00	6.95	0.00333	1-910		15.00	15.00	30.00	F	F	1.08	IRRIGATION STRUCTURE	INSTALL, PROVIDE FLARED TYPE HEADWALLS
		38+988	45° LF	9.09	6.95	6.90	6.85	0.00244	1-910		22.50	18.50	41.00	F	F	0.92	IRRIGATION STRUCTURE	INSTALL, PROVIDE FLARED TYPE HEADWALLS
		39+045		8.77	7.05	6.98	6.90	0.00454	1-910		16.50	16.50	33.00	F	F	1.26	STORM WATER DRAINAGE	INSTALL, PROVIDE FLARED TYPE HEADWALLS
		39+190	37° RF	8.95	7.15	7.10	7.05	0.00244	1-910		20.50	20.50	41.00	F	F	0.92	STORM WATER DRAINAGE	INSTALL, PROVIDE FLARED TYPE HEADWALLS
18	0.80	39+365		9.86	7.50	7.45	7.40	0.00370	1-910		13.50	13.50	27.00	F	F	1.13	STORM WATER DRAINAGE	INSTALL, PROVIDE FLARED TYPE HEADWALLS
19	2.07	39+595		9.69	7.50	7.45	7.40	0.00370	1-910		13.50	13.50	27.00	F	F	1.13	IRRIGATION STRUCTURE	INSTALL, PROVIDE FLARED TYPE HEADWALLS
		ACCESS ROAD																
		ROAD INTERSECTION A-1 (STA. 34+413.681)																
		0+050		5.75	4.05	3.99	3.95	0.00500	1-910		13.00	7.00	20.00	F	F	1.32	STORM WATER DRAINAGE	INSTALL, PROVIDE FLARED TYPE HEADWALLS
		0+280		5.77	4.10	4.05	4.00	0.00714	1-910		7.00	7.00	14.00	F	F	1.58	IRRIGATION STRUCTURE	INSTALL, PROVIDE FLARED TYPE HEADWALLS
		0+430		5.47	2.85	2.88	2.90	0.00397		2-3.0x2.10	6.30	6.30	12.60	W	W	40.35	EXISTING WATERWAY	CONSTRUCT RCBC, PROVIDE WINGWALLS
		0+580		5.32	3.90	3.88	3.85	0.00385	1-910		6.50	6.50	13.00	F	F	1.16	IRRIGATION STRUCTURE	INSTALL, PROVIDE FLARED TYPE HEADWALLS
		0+770		5.85	4.40	4.45	4.30	0.00769	1-910		6.50	6.50	13.00	F	F	1.64	IRRIGATION STRUCTURE	INSTALL, PROVIDE FLARED TYPE HEADWALLS
		ROAD INTERSECTION A-2 (STA. 34+804.257)																
		0+970		6.06	4.35	4.40	4.25	0.00909	1-910		5.50	5.50	11.00	F	F	1.78	LATERAL PIPE	INSTALL, PROVIDE FLARED TYPE HEADWALLS
		1+030		6.04	4.30	4.35	4.20	0.00909	1-910		5.50	5.50	11.00	F	F	1.78	LATERAL PIPE	INSTALL, PROVIDE FLARED TYPE HEADWALLS
		ROAD INTERSECTION A-4 (STA. 37+233.648)																
		0+980		7.51	5.35	5.38	5.30	0.00385	1-910		6.50	6.50	13.00	F	F	1.16	LATERAL PIPE	INSTALL, PROVIDE FLARED TYPE HEADWALLS
		ROAD INTERSECTION A-5 (STA. 38+115.240)																
		1+100		8.60	6.05	6.08	6.10	0.00312	1-910		8.00	8.00	16.00	F	F	1.04	LATERAL PIPE	INSTALL, PROVIDE FLARED TYPE HEADWALLS
		1+204		7.74	6.00	6.03	6.05	0.00357	1-910		7.00	7.00	14.00	F	F	1.11	IRRIGATION STRUCTURE	INSTALL, PROVIDE FLARED TYPE HEADWALLS
		1+490	45° LF	6.31	4.55	4.58	4.60	0.00278	2-910		9.00	9.00	18.00	F	F	1.97	IRRIGATION STRUCTURE	CONSTRUCT RCBC, PROVIDE WINGWALLS
		1+776	10° LF	7.21	3.20	3.15	3.10	0.00500	2-910		10.00	10.00	20.00	F	F	2.64	IRRIGATION STRUCTURE	INSTALL, PROVIDE FLARED TYPE HEADWALLS
		1+940	20° RF	6.64	4.85	4.88	4.90	0.00333	1-910		7.50	7.50	15.00	F	F	1.08	LATERAL PIPE	INSTALL, PROVIDE FLARED TYPE HEADWALLS
		2+080	30° LF	7.16	5.40	5.43	4.45	0.00312	1-910		8.00	8.00	16.00	F	F	1.04	LATERAL PIPE	INSTALL, PROVIDE FLARED TYPE HEADWALLS
		2+218	10° LF	7.85	4.75	4.78	4.80	0.00403		2-2.40x2.40	6.30	6.10	12.40	W	W	35.01	IRRIGATION STRUCTURE	CONSTRUCT RCBC, PROVIDE WINGWALLS
		2+363	45° RF	8.57	5.55	5.60	5.65	0.00526	1-910		9.50	9.50	19.00	F	F	1.35	IRRIGATION STRUCTURE	INSTALL, PROVIDE FLARED TYPE HEADWALLS
		2+500	30° RF	8.66	5.80	5.83	5.85	0.00312	1-910		8.00	8.00	16.00	F	F	1.04	LATERAL PIPE	INSTALL, PROVIDE FLARED TYPE HEADWALLS
		2+760	30° LF	7.36	5.45	5.48	5.50	0.00312	1-910		8.00	8.00	16.00	F	F	1.04	LATERAL PIPE	INSTALL, PROVIDE FLARED TYPE HEADWALLS
		2+869	52° LF	7.01	4.80	4.85	4.90	0.00455	2-910		11.00	11.00	22.00	F	F	2.51	IRRIGATION STRUCTURE	INSTALL, PROVIDE FLARED TYPE HEADWALLS
		2+968	40° RF	7.40	5.30	5.35	5.40	0.00556	1-910		9.00	9.00	18.00	F	F	1.39	IRRIGATION STRUCTURE	CONSTRUCT RCBC, PROVIDE WINGWALLS
		2+980	40° RF	7.46	5.30	5.35	5.40	0.00556	1-910		9.00	9.00	18.00	F	F	1.39	LATERAL PIPE	INSTALL, PROVIDE FLARED TYPE HEADWALLS
		3+200		8.56	6.25	6.30	6.35	0.00625	1-910		8.50	7.50	16.00	F	F	1.47	LATERAL PIPE	INSTALL, PROVIDE FLARED TYPE HEADWALLS
		ROAD INTERSECTION A-6 (STA. 38+710.214)																
		0+960		7.87	6.40	6.47	6.54	0.02000	1-610		3.50	3.50	7.00	F	F	0.91	LATERAL PIPE	INSTALL, PROVIDE FLARED TYPE HEADWALLS
		1+020		8.32	6.60	6.67	6.74	0.01750	1-610		4.00	4.00	8.00	F	F	0.85	LATERAL PIPE	INSTALL, PROVIDE FLARED TYPE HEADWALLS
		ROAD INTERSECTION A-7 (STA. 39+133.681)																
		1+080		7.92	6.15	6.18	6.20	0.00294	1-910		8.50	8.50	17.00	F	F	1.01	LATERAL PIPE	INSTALL, PROVIDE FLARED TYPE HEADWALLS
		ROAD INTERSECTION A-7a (STA. 39+233.681)																
		0+010		8.81	7.20	7.25	7.30	0.01429	1-910		3.50	3.50	7.00	F	F	2.23	LATERAL PIPE	INSTALL, PROVIDE FLARED TYPE HEADWALLS

LEGEND:
S – STRAIGHT W – WINGWALL
F – FLARED

JICA
JAPAN INTERNATIONAL COOPERATION AGENCY
KEI KATAHIRA & ENGINEERS INTERNATIONAL
YEC YACHIYO ENGINEERING CO., LTD.

	DATE	SIGNATURE
DESIGNED	9/16/02	F. STA. MARIA
CHECKED	9/18/02	A. HAKIM
SUBMITTED	9/20/02	TEAM LEADER

REPUBLIC OF THE PHILIPPINES
DEPARTMENT OF PUBLIC WORKS AND HIGHWAYS

PJHL – PMO	BUREAU OF DESIGN		OFFICE OF THE SECRETARY	
Submitted By:	Reviewed By:	Recommended By:	Recommended By: (See cover sheet for Signature)	Approved By: (See cover sheet for Signature/Approval)
DANILO C. TRAJANO	JOSEFINA M. ALAGAR	GILBERTO S. REYES	MANUEL M. BONOAN	SIMEON A. DATUMANONG
Project Director	Chief, Highways Division	OIC, Director IV	Undersecretary	Secretary

PROJECT AND LOCATION :
THE DETAILED DESIGN STUDY ON UPGRADING INTER-URBAN HIGHWAY SYSTEM ALONG THE PAN-PHILIPPINE HIGHWAY (Plaridel, Cabanatuan and San Jose Bypasses)
PLARIDEL BYPASS - CONTRACT PACKAGE I

SCALE : FULL SIZE A1

SHEET CONTENTS : SCHEDULE OF DRAINAGE STRUCTURES

SHEET NO. : DG-01

SCHEDULE OF SIDE DITCH AND OUTER SEPARATOR DITCHES

STATION FROM	STATION TO	LENGTH (m)	TYPE	LOCATION	REMARKS
SIDE DITCH (MAIN BYPASS)					
34+200	34+450	250.00	E-4	LEFT SIDE	UNLINED
34+200	34+400	200.00	E-3	RIGHT SIDE	UNLINED
34+580	34+715	135.00	E-3	LEFT SIDE	UNLINED
34+580	34+635	55.00	C-2	RIGHT SIDE	LINED
34+635	34+715	80.00	E-4	RIGHT SIDE	UNLINED
34+775	35+390	615.00	U	LEFT SIDE	UNLINED
34+775	34+900	125.00	U	RIGHT SIDE	UNLINED
35+135	35+380	245.00	E-4	RIGHT SIDE	UNLINED
35+535	35+830	295.00	E-3	LEFT SIDE	UNLINED
35+535	35+820	285.00	E-4	RIGHT SIDE	UNLINED
36+890	37+220	330.00	E-3	LEFT SIDE	UNLINED
37+845	38+080	235.00	E-3	LEFT SIDE	UNLINED
38+640	38+690	50.00	E-3	LEFT SIDE	UNLINED
38+640	38+690	50.00	E-3	RIGHT SIDE	UNLINED
39+000	39+130	130.00	E-4	LEFT SIDE	UNLINED
38+970	39+090	120.00	E-3	RIGHT SIDE	UNLINED
39+150	39+365	215.00	E-3	RIGHT SIDE	UNLINED
SIDE DITCH (ACCESS ROAD)					
ROAD INTERSECTION A-1					
0+000	0+740	740.00	E-4	LEFT SIDE	UNLINED
0+000	0+740	740.00	E-4	RIGHT SIDE	UNLINED
0+770	0+900	130.00	E-4	LEFT SIDE	UNLINED
0+770	0+900	130.00	E-4	RIGHT SIDE	UNLINED
ROAD INTERSECTION A-4					
1+020	1+100	80.00	E-4	LEFT SIDE	UNLINED
1+020	1+100	80.00	E-4	RIGHT SIDE	UNLINED
ROAD INTERSECTION A-6					
0+960	0+988.71	28.71	E-4	RIGHT SIDE	UNLINED
ROAD INTERSECTION A-7					
0+860	1+010	150.00	E-4	LEFT SIDE	UNLINED
0+860	1+010	150.00	E-4	RIGHT SIDE	UNLINED
1+020	1+210	190.00	E-4	RIGHT SIDE	UNLINED
1+080	1+210	130.00	E-4	LEFT SIDE	UNLINED

STATION FROM	STATION TO	LENGTH (m)	TYPE	LOCATION	REMARKS
SIDE DITCH (INTERCHANGE)					
RAMP A					
0+050	0+150	90.00	U	LEFT SIDE	LINED
0+100	0+210	110.00	U	RIGHT SIDE	LINED
RAMP C					
33+150	33+380	230.00	U	LEFT SIDE	LINED
33+160	33+380	220.00	U	RIGHT SIDE	LINED
33+270	33+370	100.00	BU	LEFT SIDE	LINED
33+270	33+370	100.00	BU	RIGHT SIDE	LINED
33+460	33+705	245.00	U	LEFT SIDE	LINED
33+460	33+620	160.00	U	RIGHT SIDE	LINED
33+460	33+600	140.00	BU	LEFT SIDE	LINED
33+460	33+600	140.00	BU	RIGHT SIDE	LINED
RAMP D					
33+025	33+556	531.00	U	RIGHT SIDE	LINED
33+180	33+480	300.00	U	LEFT SIDE	LINED
RAMP E					
33+556	34+100	544.00	U	LEFT SIDE	LINED
33+556	34+100	544.00	U	RIGHT SIDE	LINED
OUTER SEPARATOR DITCH (MAIN BYPASS)					
34+440	34+900	460.00	E-2a	RIGHT SIDE	LINED
34+900	35+220	320.00	U	RIGHT SIDE	LINED
34+940	35+220	280.00	U	LEFT SIDE	LINED
35+135	36+000	865.00	E-2a	LEFT SIDE	LINED
35+135	36+000	865.00	E-2a	RIGHT SIDE	LINED
36+000	36+120	120.00	U	LEFT SIDE	LINED
36+000	36+255	255.00	U	RIGHT SIDE	LINED

QUANTITIES FOR RCBC

STATION	SIZE	Item 103(1) Structural Excavation (m^3)	Item 103(3)a Gravel Foundation Fill (m^3)		Item 404(1) Reinforcing Bar (Grade 40) (kg)		Item 405(1)a Structural Conc. Class "A" (m^3)		Item 405(6) Lean Concrete (m^3)	
		RCBC & WW	RCBC	WW	RCBC	WW	RCBC	WW	RCBC	WW
33+156	2-4.00 x 2.50	234.55	13.74	15.52	12,542.74	1,342.00	115.37	34.02	6.87	7.88
33+500	3-3.00 x 2.40	467.38	31.82	11.05	28,691.52	1,880.00	280.80	34.38	15.91	5.53
34+775	2-2.40 x 1.80	345.24	26.85	5.21	20,337.78	1,000.00	237.38	18.28	13.42	2.60
36+125	2-3.00 x 2.75	570.47	33.67	10.05	34,433.28	1,980.00	323.05	35.88	16.84	5.03
34+000	2-3.00 x 2.10	378.08	28.36	7.15	17,672.46	1,360.00	167.63	24.76	9.59	3.58
38+720	2-3.00 x 2.10	249.34	17.94	7.15	16,528.20	1,360.00	156.78	24.76	8.97	3.58
TOTAL		2,245.06	152.38	56.13	130,205.98	8,922.00	1,281.02	172.08	71.60	27.99
ACCESS ROAD										
ROAD INTERSECTION A-1 (STA. 34+413.681)										
0+430	2-3.00 x 2.10	120.83	8.69	7.15	8,009.82	1,360.00	75.98	24.76	4.35	3.58
ROAD INTERSECTION A-5 (STA. 38+115.240)										
2+218	2-2.40 x 2.40	110.48	7.07	7.50	5,726.32	1,540.00	69.19	27.96	3.53	3.75
TOTAL		231.31	15.76	14.65	13,736.14	2,900.00	145.17	52.72	7.88	7.33

JICA
JAPAN INTERNATIONAL COOPERATION AGENCY

KEI KATAHIRA & ENGINEERS INTERNATIONAL
YEC YACHIYO ENGINEERING CO., LTD.

	DATE	SIGNATURE
DESIGNED	9/16/02	V. STA. MARIA
CHECKED	9/18/02	H. TAKIMI
SUBMITTED	9/20/02	M. KOMATSU TEAM LEADER

REPUBLIC OF THE PHILIPPINES
DEPARTMENT OF PUBLIC WORKS AND HIGHWAYS

PJHL – PMO	BUREAU OF DESIGN		OFFICE OF THE SECRETARY	
Submitted By:	Reviewed By:	Recommended By:	Recommended By: (See cover sheet for Signature)	Approved By: (See cover sheet for Signature/Approval)
DANILO C. TRAJANO	JOSEFINA M. ALAGAR	GILBERTO S. REYES	MANUEL M. BONOAN	SIMEON A. DATUMANONG
Project Director	Chief, Highways Division	OIC, Director IV	Undersecretary	Secretary

PROJECT AND LOCATION :
THE DETAILED DESIGN STUDY ON UPGRADING INTER-URBAN HIGHWAY SYSTEM ALONG THE PAN-PHILIPPINE HIGHWAY (Plaridel, Cabanatuan and San Jose Bypasses)
PLARIDEL BYPASS - CONTRACT PACKAGE I

SCALE : FULL SIZE A1

SHEET CONTENTS : SCHEDULE OF SIDE DITCH AND QUANTITIES FOR RCBC

SHEET NO. : DG-02

34+555

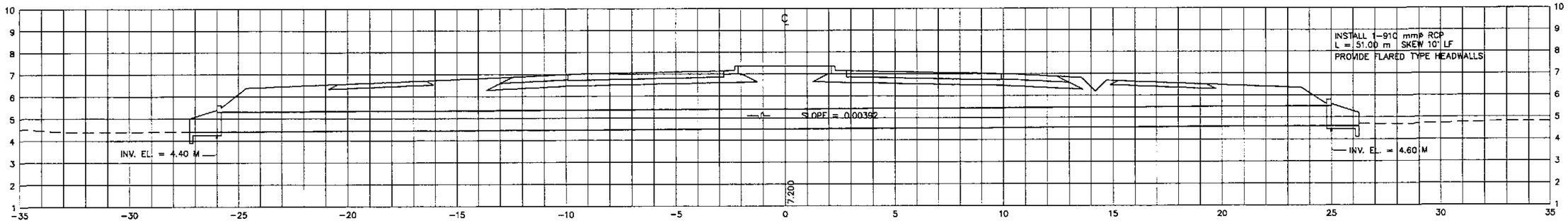

34+450

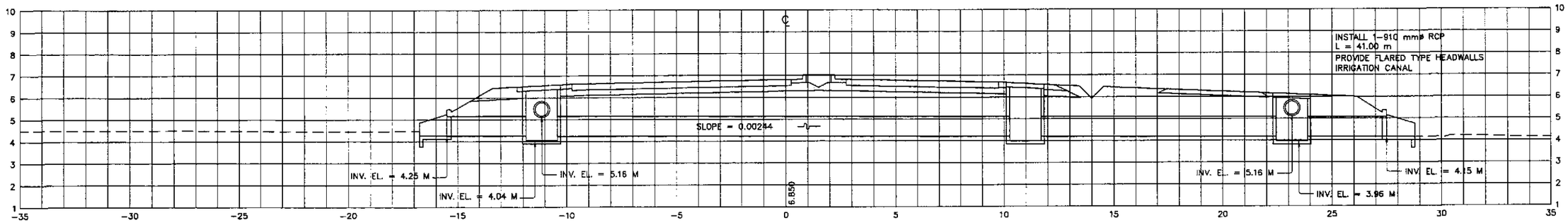

34+286

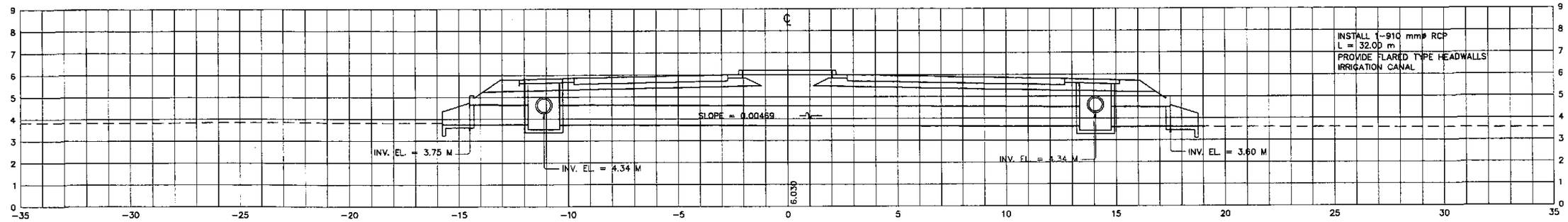

34+200

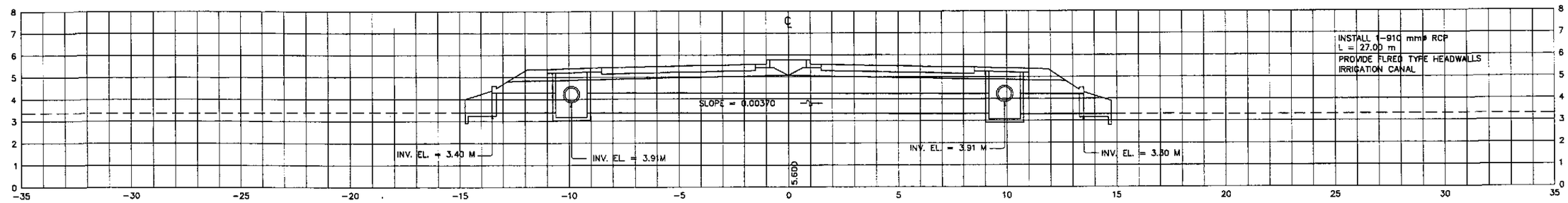

JICA JAPAN INTERNATIONAL COOPERATION AGENCY KEI KATAHIRA & ENGINEERS INTERNATIONAL YEC YACHIYO ENGINEERING CO., LTD.	DATE	SIGNATURE	REPUBLIC OF THE PHILIPPINES DEPARTMENT OF PUBLIC WORKS AND HIGHWAYS				PROJECT AND LOCATION :
	DESIGNED	9/16/02 F. STA. MARIA	PJHL - PMO	BUREAU OF DESIGN		OFFICE OF THE SECRETARY	THE DETAILED DESIGN STUDY ON UPGRADING INTER-URBAN HIGHWAY SYSTEM ALONG THE PAN-PHILIPPINE HIGHWAY (Plaridel, Cabanatuan and San Jose Bypasses)
	CHECKED	9/18/02 A. HAKIN	Submitted By:	Reviewed By:	Recommended By:	Recommended By: (See cover sheet for Signature) / Approved By: (See cover sheet for Signature/Approval)	
	SUBMITTED	9/20/02 M.R. KIKUCHI TEAM LEADER	DANILO C. TRAJANO Project Director	JOSEFINA M. ALAGAR Chief, Highways Division	GILBERTO S. REYES OIC, Director IV	MANUEL M. BONGAN Undersecretary	SIMEON A. DATUMANONG Secretary

SCALE :	SHEET CONTENTS :	SHEET NO. :
1:100 FULL SIZE A1	**DRAINAGE CROSS-SECTION** ALONG BYPASS (INITIAL STAGE) STA. 34+200 - STA. 34+555	**DC-01**

PLARIDEL BYPASS - CONTRACT PACKAGE I

34+900

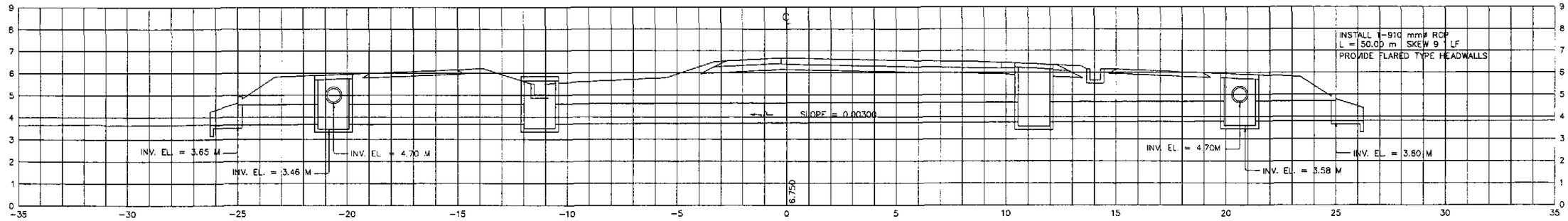

34+775

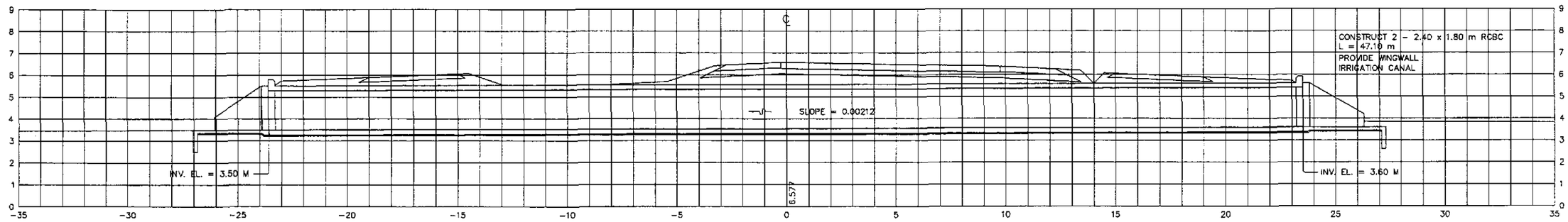

34+715

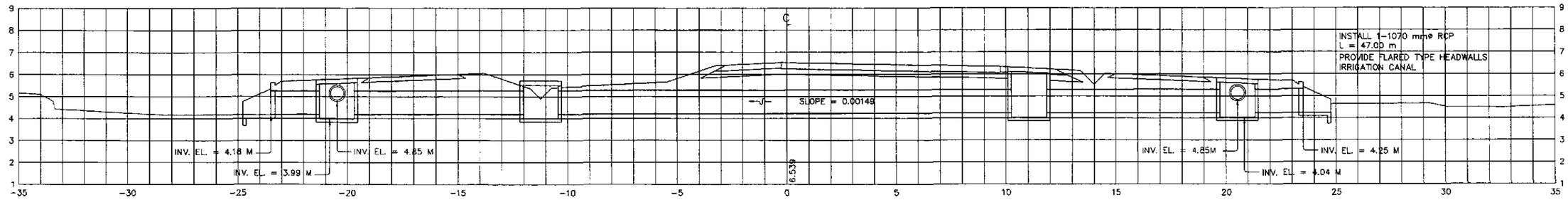

34+635

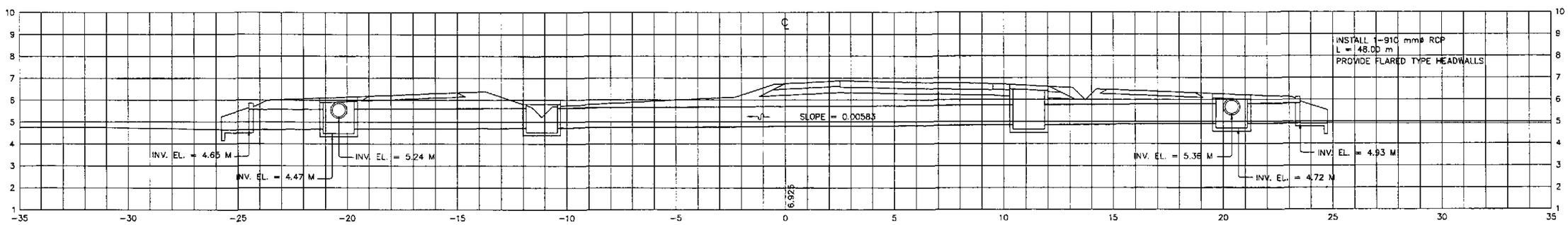

JICA
JAPAN INTERNATIONAL COOPERATION AGENCY

KATAHIRA & ENGINEERS INTERNATIONAL
YACHIYO ENGINEERING CO., LTD.

	DATE	SIGNATURE
DESIGNED	9/16/02	
CHECKED	9/18/02	H. A. HAKIM
SUBMITTED	9/20/02	A. KIKUCHI TEAM LEADER

REPUBLIC OF THE PHILIPPINES
DEPARTMENT OF PUBLIC WORKS AND HIGHWAYS

PJHL - PMO	BUREAU OF DESIGN		OFFICE OF THE SECRETARY	
Submitted By:	Reviewed By:	Recommended By:	Recommended By: (See cover sheet for Signature)	Approved By: (See cover sheet for Signature/Approval)
DANILO C. TRAJANO	JOSEFINA M. ALAGAR	GILBERTO S. REYES	MANUEL M. BONDAN	SIMEON A. DATUMANONG
Project Director	Chief, Highways Division	OIC, Director IV	Undersecretary	Secretary

PROJECT AND LOCATION :
THE DETAILED DESIGN STUDY ON UPGRADING INTER-URBAN HIGHWAY SYSTEM ALONG THE PAN-PHILIPPINE HIGHWAY (Plaridel, Cabanatuan and San Jose Bypasses)
PLARIDEL BYPASS - CONTRACT PACKAGE I

SCALE : 1:100 FULL SIZE A1

SHEET CONTENTS :
DRAINAGE CROSS-SECTION
ALONG BYPASS (INITIAL STAGE)
STA. 34+635 - STA. 34+900

SHEET NO. : DC-02

35+670

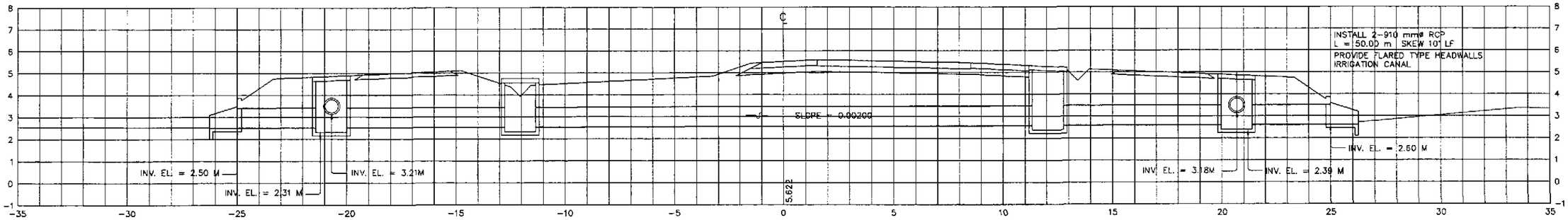

35+535

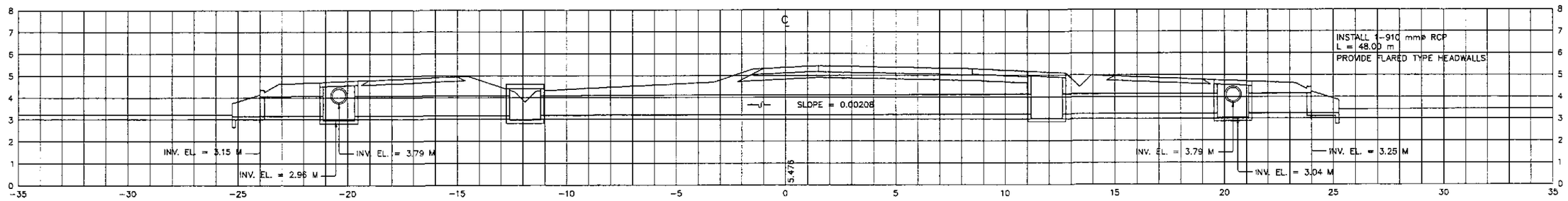

35+380

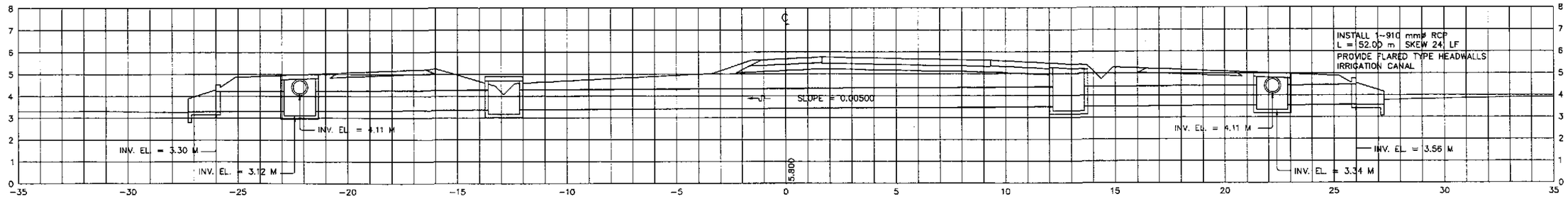

35+135

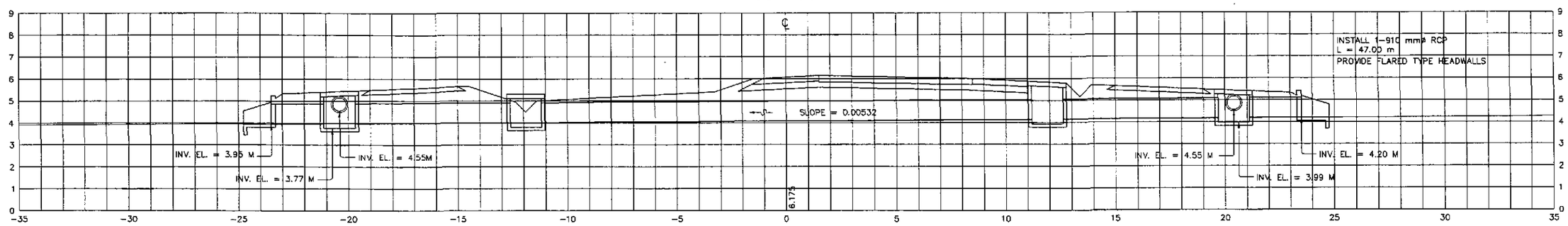

JICA JAPAN INTERNATIONAL COOPERATION AGENCY	DATE	SIGNATURE	REPUBLIC OF THE PHILIPPINES DEPARTMENT OF PUBLIC WORKS AND HIGHWAYS			
KEI KATAHIRA & ENGINEERS INTERNATIONAL / YEO YACHIYO ENGINEERING CO., LTD.	DESIGNED 9/16/02	F. STA. MARIA	PJHL – PMO	BUREAU OF DESIGN	OFFICE OF THE SECRETARY	
	CHECKED 9/18/02	A. CAKIN	Submitted By:	Reviewed By:	Recommended By:	Recommended By: (See cover sheet for Signature) / Approved By: (See cover sheet for Signature/Approval)
	SUBMITTED 9/20/02	TEAM LEADER	DANILO C. TRAJANO, Project Director	JOSEFINA M. ALAGAR, Chief, Highways Division	GILBERTO S. REYES, OIC, Director IV	MANUEL M. BONOAN, Undersecretary / SIMEON A. DATUMANONG, Secretary

PROJECT AND LOCATION :	SCALE :	SHEET CONTENTS :	SHEET NO. :
THE DETAILED DESIGN STUDY ON UPGRADING INTER-URBAN HIGHWAY SYSTEM ALONG THE PAN-PHILIPPINE HIGHWAY (Plaridel, Cabanatuan and San Jose Bypasses) PLARIDEL BYPASS - CONTRACT PACKAGE I	1:100 FULL SIZE A1	DRAINAGE CROSS-SECTION ALONG BYPASS (INITIAL STAGE) STA. 35+135 - STA. 35+670	DC-03

36+075

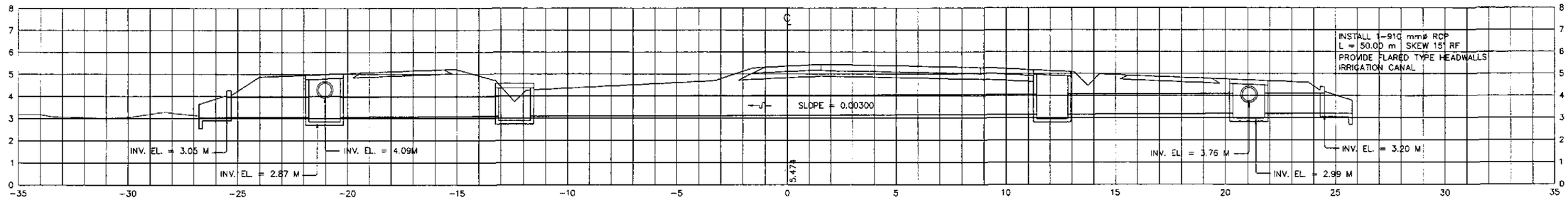

36+055

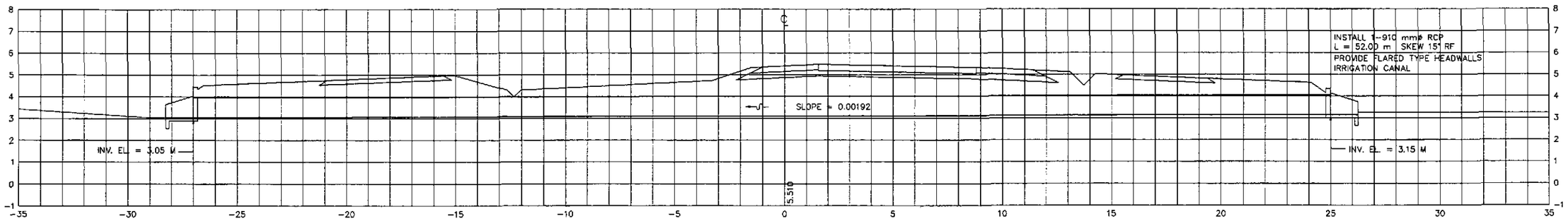

35+965

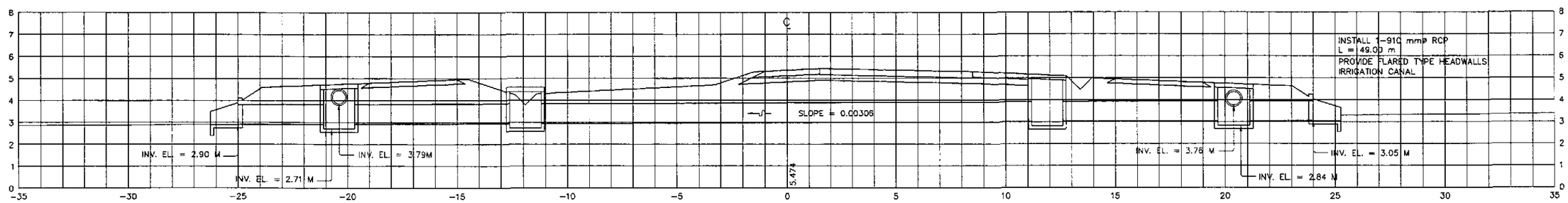

35+825

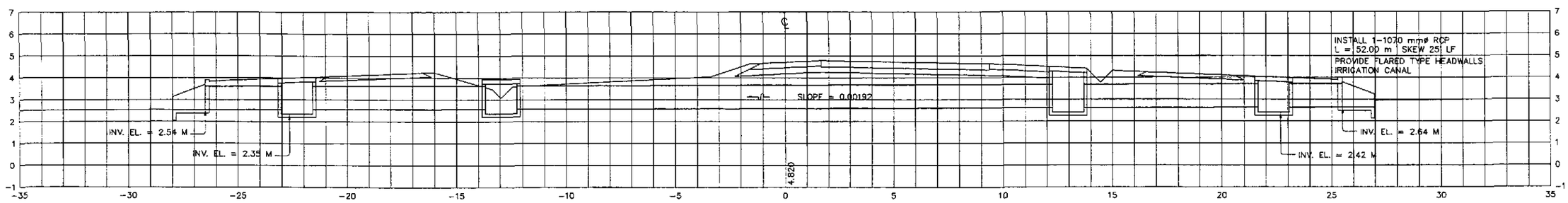

JICA JAPAN INTERNATIONAL COOPERATION AGENCY	DATE	SIGNATURE	REPUBLIC OF THE PHILIPPINES DEPARTMENT OF PUBLIC WORKS AND HIGHWAYS				
			PJHL – PMO	BUREAU OF DESIGN		OFFICE OF THE SECRETARY	
KATAHIRA & ENGINEERS INTERNATIONAL / YACHIYO ENGINEERING CO., LTD.	DESIGNED 9/16/02	F. STA. MARIA	Submitted By:	Reviewed By:	Recommended By:	Recommended By: (See cover sheet for Signature)	Approved By: (See cover sheet for Signature/Approval)
	CHECKED 9/18/02						
	SUBMITTED 9/20/02	TEAM LEADER	DANILO C. TRAJANO	JOSEFINA M. ALAGAR	GILBERTO S. REYES	MANUEL M. BONDAN	SIMEON A. DATUMANONG
			Project Director	Chief, Highways Division	OIC, Director IV	Undersecretary	Secretary

PROJECT AND LOCATION :	SCALE :	SHEET CONTENTS :	SHEET NO. :
THE DETAILED DESIGN STUDY ON UPGRADING INTER-URBAN HIGHWAY SYSTEM ALONG THE PAN-PHILIPPINE HIGHWAY (Plaridel, Cabanatuan and San Jose Bypasses)	1:100	DRAINAGE CROSS-SECTION ALONG BYPASS (INITIAL STAGE) STA. 35+825 - STA. 36+075	DC-04
PLARIDEL BYPASS - CONTRACT PACKAGE I	FULL SIZE A1		

36+365

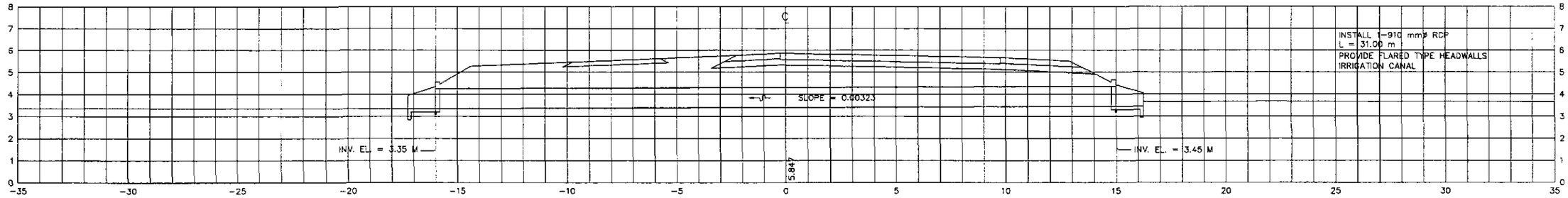

36+285

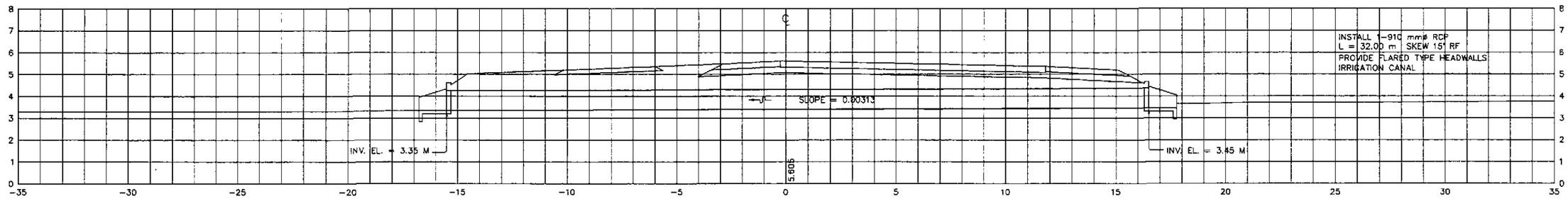

36+255

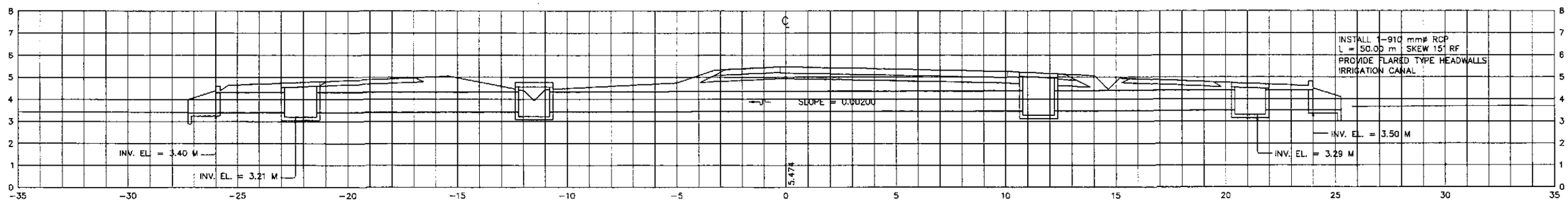

36+125

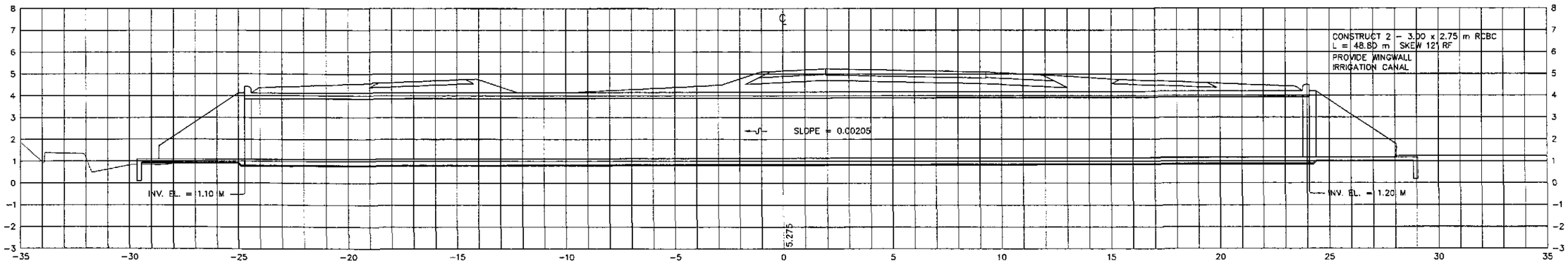

JICA JAPAN INTERNATIONAL COOPERATION AGENCY	DATE	SIGNATURE	REPUBLIC OF THE PHILIPPINES DEPARTMENT OF PUBLIC WORKS AND HIGHWAYS	PROJECT AND LOCATION :	SCALE :	SHEET CONTENTS :
KEI KATAHIRA & ENGINEERS INTERNATIONAL / YEC YACHIYO ENGINEERING CO., LTD.	DESIGNED 9/12/02	F. STA. MARIA	PJHL - PMO / BUREAU OF DESIGN / OFFICE OF THE SECRETARY	THE DETAILED DESIGN STUDY ON UPGRADING INTER-URBAN HIGHWAY SYSTEM ALONG THE PAN-PHILIPPINE HIGHWAY (Plaridel, Cabanatuan and San Jose Bypasses)	1:100	DRAINAGE CROSS-SECTION ALONG BYPASS (INITIAL STAGE) STA. 36+125 - STA. 36+365
	CHECKED 9/12/02	A. HAKIM	Submitted By: DANILO C. TRAJANO, Project Director	Reviewed By: JOSEFINA M. ALAGAR, Chief, Highways Division	Recommended By: GILBERTO S. REYES, OIC, Director IV	Recommended By: (See cover sheet for Signature) MANUEL M. BONDAN, Undersecretary
	SUBMITTED 9/20/02	TEAM LEADER				Approved By: (See cover sheet for Signature/Approval) SIMEON A. DATUMANONG, Secretary
				PLARIDEL BYPASS - CONTRACT PACKAGE I	FULL SIZE A1	

SHEET NO. : **DC-05**

36+660

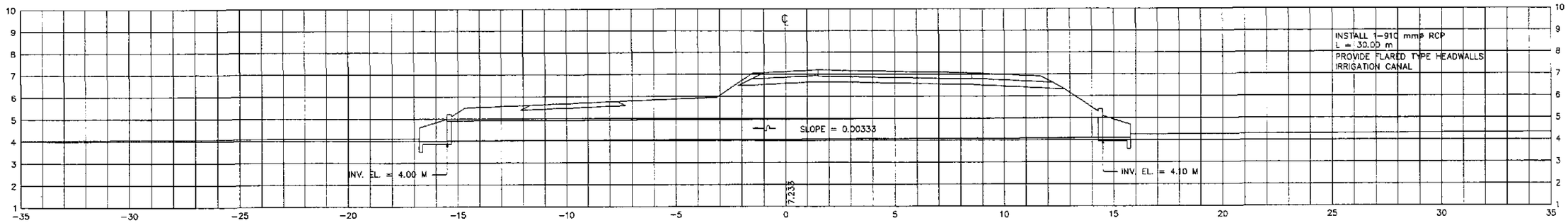

36+565

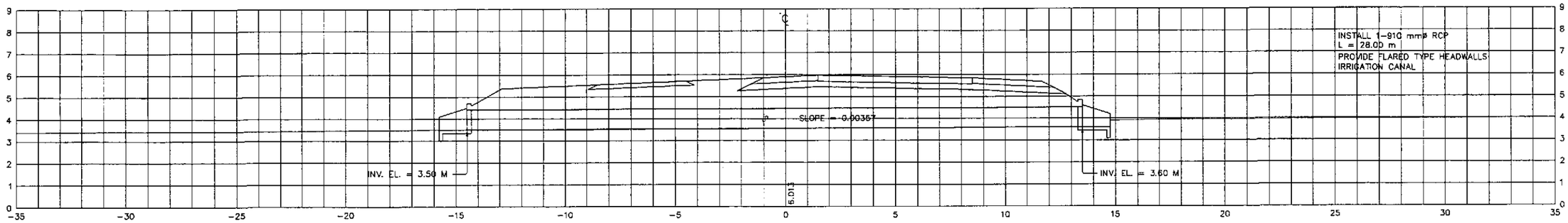

36+525

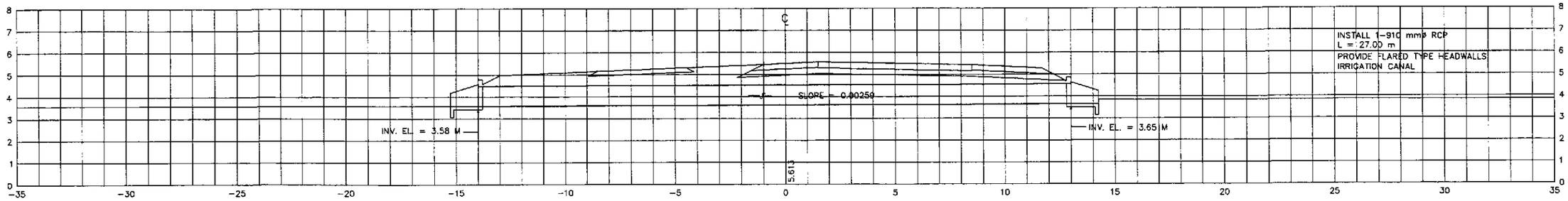

36+445

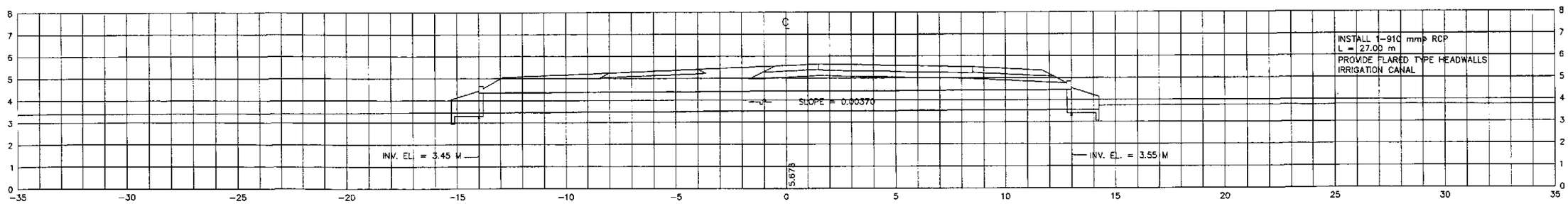

JICA
JAPAN INTERNATIONAL COOPERATION AGENCY

KEI KATAHIRA & ENGINEERS INTERNATIONAL
YEC YACHIYO ENGINEERING CO., LTD.

	DATE	SIGNATURE*
DESIGNED	9/16/02	
CHECKED	9/18/02	A. HAKIM
SUBMITTED	9/20/02	TEAM LEADER

REPUBLIC OF THE PHILIPPINES
DEPARTMENT OF PUBLIC WORKS AND HIGHWAYS

PJHL - PMO	BUREAU OF DESIGN		OFFICE OF THE SECRETARY	
Submitted By:	Reviewed By:	Recommended By:	Recommended By: (See cover sheet for Signature)	Approved By: (See cover sheet for Signature/Approval)
DANILO C. TRAJANO	JOSEFINA M. ALAGAR	GILBERTO S. REYES	MANUEL M. BONDAN	SIMEON A. DATUMANONG
Project Director	Chief, Highways Division	OIC, Director IV	Undersecretary	Secretary

PROJECT AND LOCATION :
THE DETAILED DESIGN STUDY ON UPGRADING INTER-URBAN HIGHWAY SYSTEM ALONG THE PAN-PHILIPPINE HIGHWAY (Plaridel, Cabanatuan and San Jose Bypasses)
PLARIDEL BYPASS - CONTRACT PACKAGE I

SCALE : 1:100 FULL SIZE A1

SHEET CONTENTS :
DRAINAGE CROSS-SECTION
ALONG BYPASS (INITIAL STAGE)
STA. 36+445 - STA. 36+660

SHEET NO. : DC-06

37+244

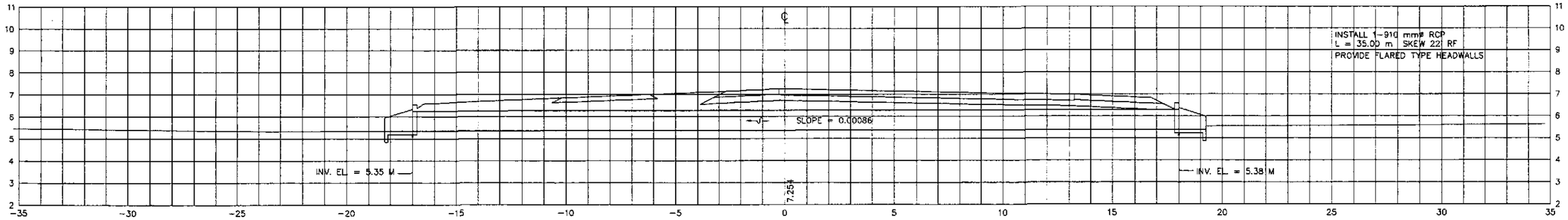

37+223

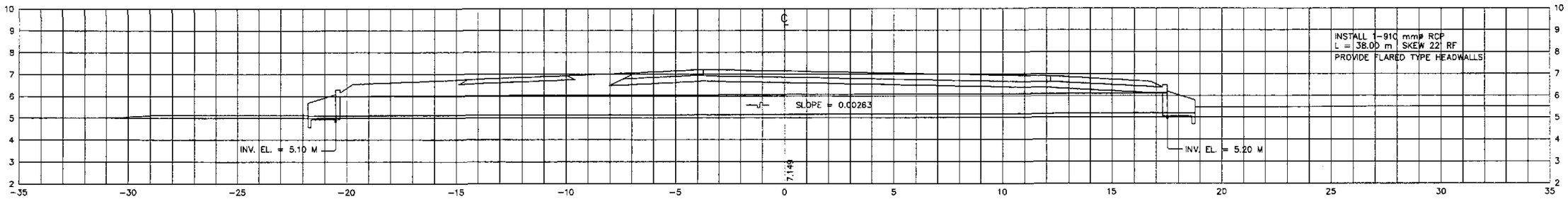

37+040

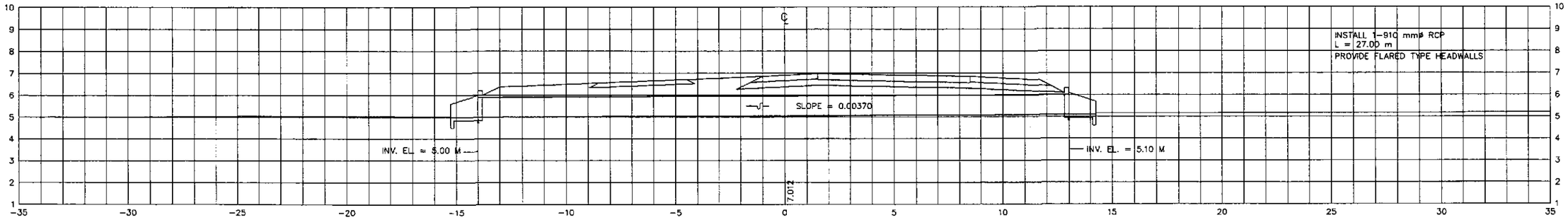

36+890

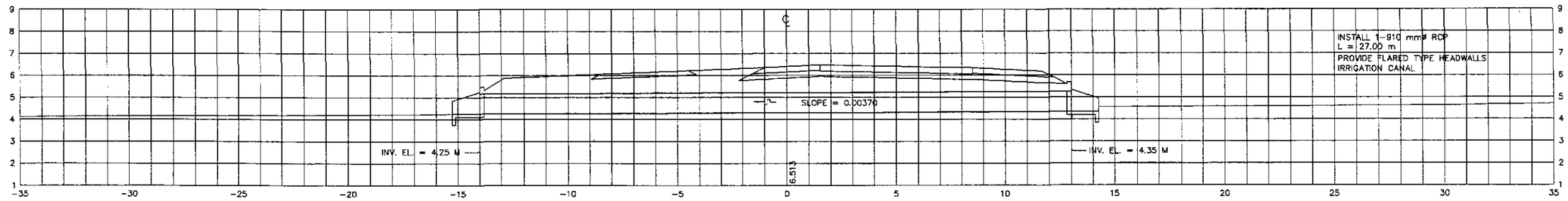

JICA
JAPAN INTERNATIONAL COOPERATION AGENCY

KEI KATAHIRA & ENGINEERS INTERNATIONAL
YEC YACHIYO ENGINEERING CO., LTD.

	DATE	SIGNATURE
DESIGNED	9/16/02	F. STA. MARIA
CHECKED	9/18/02	A. HAKIM
SUBMITTED	9/20/02	TEAM LEADER

REPUBLIC OF THE PHILIPPINES
DEPARTMENT OF PUBLIC WORKS AND HIGHWAYS

PUHL – PMO	BUREAU OF DESIGN		OFFICE OF THE SECRETARY	
Submitted By:	Reviewed By:	Recommended By:	Recommended By: (See cover sheet for Signature)	Approved By: (See cover sheet for Signature/Approval)
DANILO C. TRAJANO	JOSEFINA M. ALAGAR	GILBERTO S. REYES	MANUEL M. BONOAN	SIMEON A. DATUMANONG
Project Director	Chief, Highways Division	OIC, Director IV	Undersecretary	Secretary

PROJECT AND LOCATION :
THE DETAILED DESIGN STUDY ON UPGRADING INTER-URBAN HIGHWAY SYSTEM ALONG THE PAN-PHILIPPINE HIGHWAY (Plaridel, Cabanatuan and San Jose Bypasses)
PLARIDEL BYPASS - CONTRACT PACKAGE I

SCALE : 1:100 FULL SIZE A1

SHEET CONTENTS :
DRAINAGE CROSS-SECTION
ALONG BYPASS (INITIAL STAGE)
STA. 36+890 - STA. 37+244

SHEET NO. : DC-07

37+728

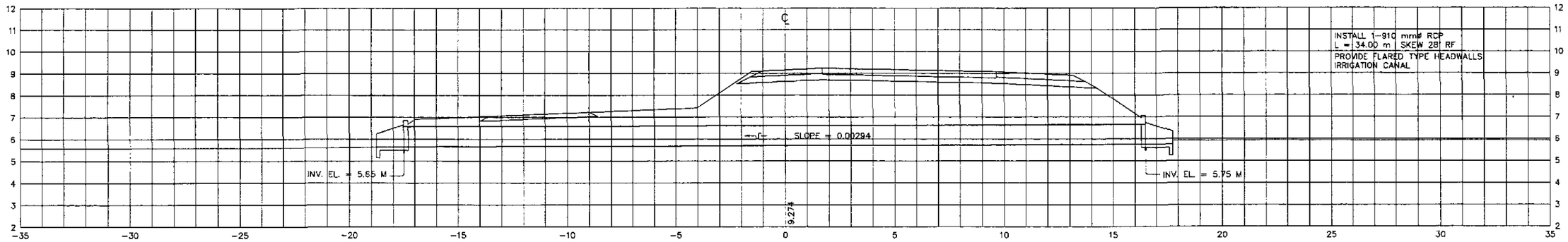

37+630

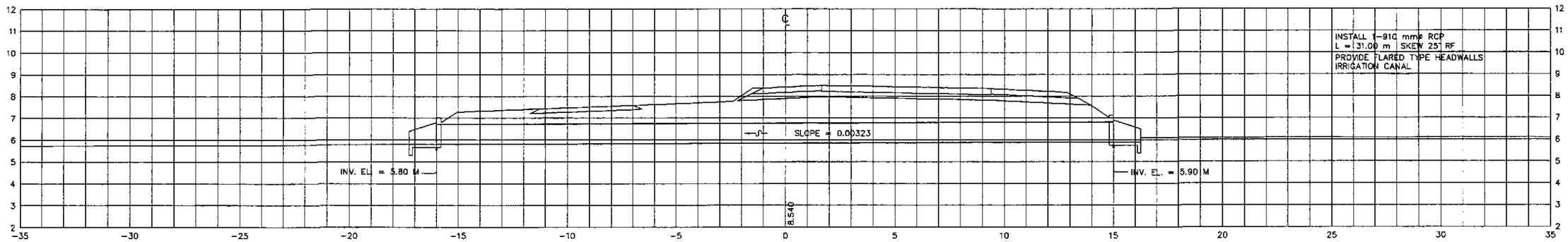

37+465

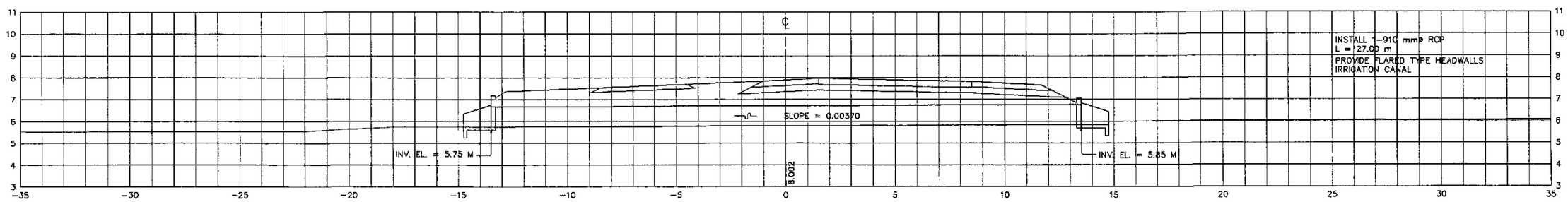

37+335

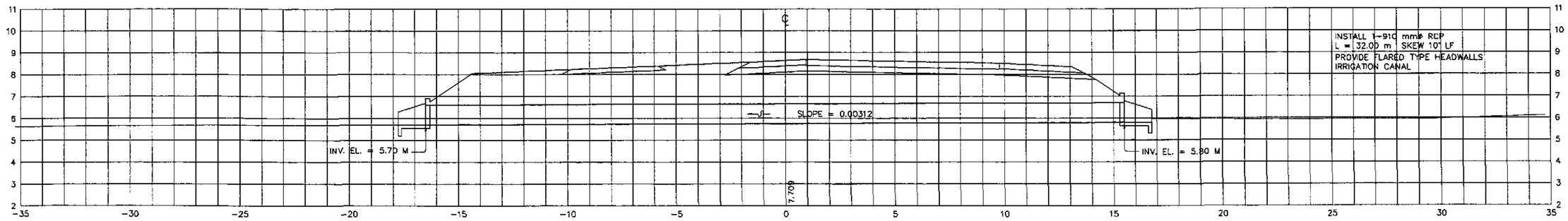

JICA
JAPAN INTERNATIONAL COOPERATION AGENCY

KEI KATAHIRA & ENGINEERS INTERNATIONAL
YEC YACHIYO ENGINEERING CO., LTD.

	DATE	SIGNATURE	PUHL – PMO	BUREAU OF DESIGN		OFFICE OF THE SECRETARY	
DESIGNED	9/16/02	W. STA. MARIA					
CHECKED	9/18/02	A. TAKIM	Submitted By:	Reviewed By:	Recommended By:	Recommended By: (See cover sheet for Signature)	Approved By: (See cover sheet for Signature/Approval)
SUBMITTED	9/20/02		DANILO C. TRAJANO	JOSEFINA M. ALAGAR	GILBERTO S. REYES	MANUEL M. BONOAN	SIMEON A. DATUMANONG
		TEAM LEADER	Project Director	Chief, Highways Division	OIC, Director IV	Undersecretary	Secretary

REPUBLIC OF THE PHILIPPINES
DEPARTMENT OF PUBLIC WORKS AND HIGHWAYS

PROJECT AND LOCATION :
THE DETAILED DESIGN STUDY ON UPGRADING INTER-URBAN HIGHWAY SYSTEM ALONG THE PAN-PHILIPPINE HIGHWAY (Plaridel, Cabanatuan and San Jose Bypasses)
PLARIDEL BYPASS - CONTRACT PACKAGE I

SCALE : 1:100 FULL SIZE A1

SHEET CONTENTS :
DRAINAGE CROSS-SECTION
ALONG BYPASS (INITIAL STAGE)
STA. 37+335 - STA. 37+728

SHEET NO. : DC-08

38+195

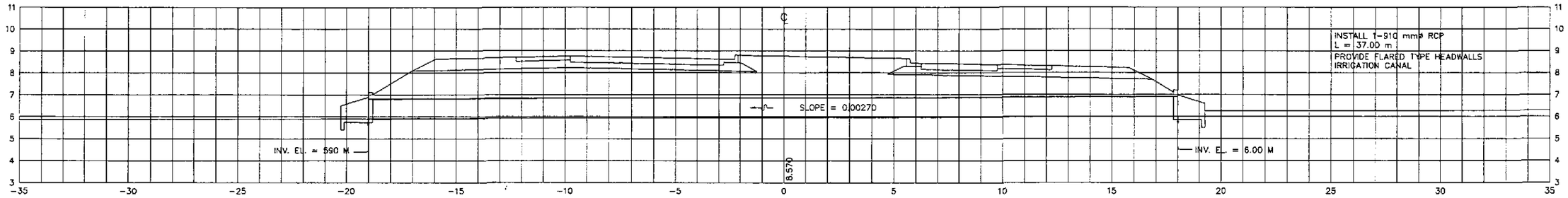

38+140

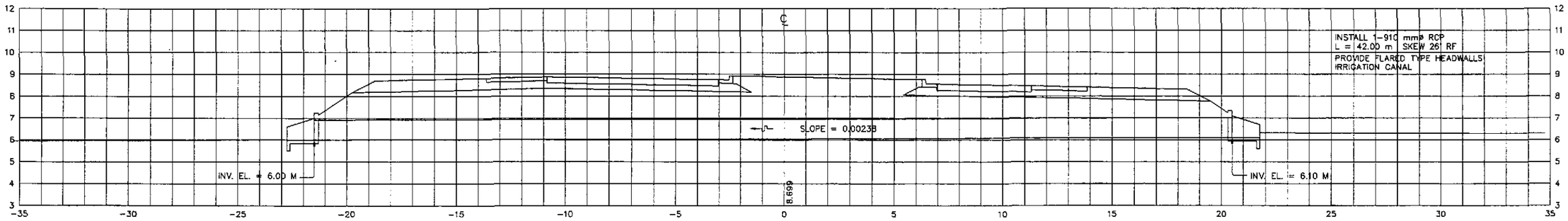

38+090

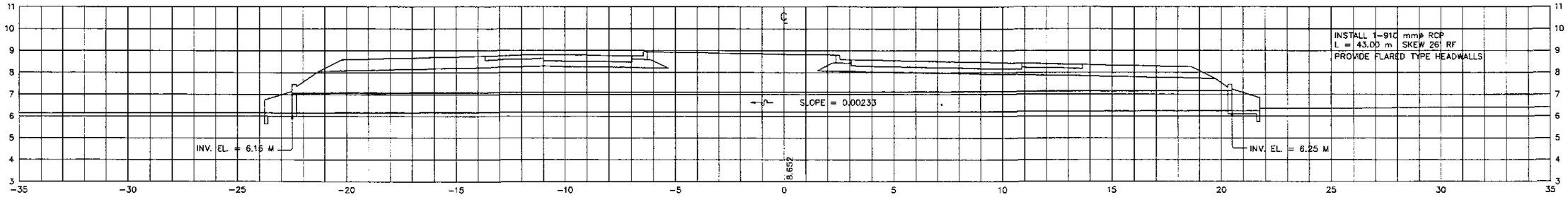

37+852

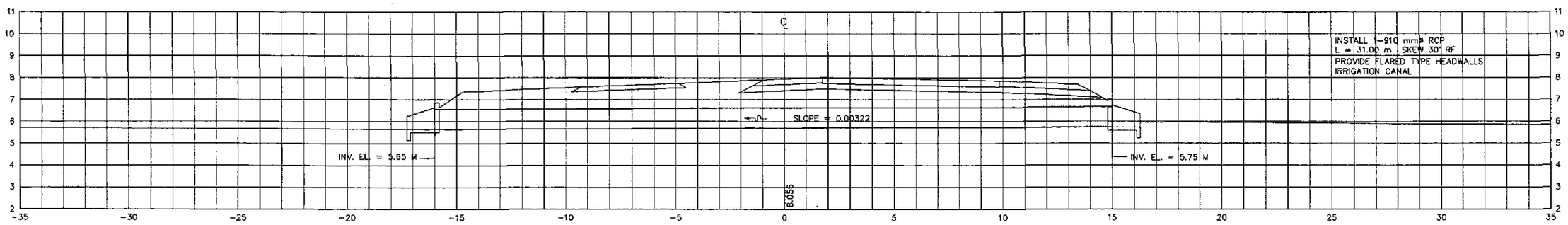

JICA
JAPAN INTERNATIONAL COOPERATION AGENCY

KEI KATAHIRA & ENGINEERS INTERNATIONAL
YEC YACHIYO ENGINEERING CO., LTD.

	DATE	SIGNATURE
DESIGNED	9/6/02	F. STA. MARIA
CHECKED	9/12/02	A. HAKIM
SUBMITTED	9/20/02	TEAM LEADER

REPUBLIC OF THE PHILIPPINES
DEPARTMENT OF PUBLIC WORKS AND HIGHWAYS

PJHL – PMO	BUREAU OF DESIGN		OFFICE OF THE SECRETARY	
Submitted By:	Reviewed By:	Recommended By:	Recommended By: (See cover sheet for Signature)	Approved By: (See cover sheet for Signature/Approval)
DANILO C. TRAJANO	JOSEFINA M. ALAGAR	GILBERTO S. REYES	MANUEL M. BONDAN	SIMEON A. DATUMANONG
Project Director	Chief, Highways Division	OIC, Director IV	Undersecretary	Secretary

PROJECT AND LOCATION :
THE DETAILED DESIGN STUDY ON UPGRADING INTER-URBAN HIGHWAY SYSTEM ALONG THE PAN-PHILIPPINE HIGHWAY (Plaridel, Cabanatuan and San Jose Bypasses)
PLARIDEL BYPASS - CONTRACT PACKAGE I

SCALE : 1:100 FULL SIZE A1

SHEET CONTENTS :
DRAINAGE CROSS-SECTION
ALONG BYPASS (INITIAL STAGE)
STA. 37+852 - STA. 38+195

SHEET NO. : DC-09

38+720

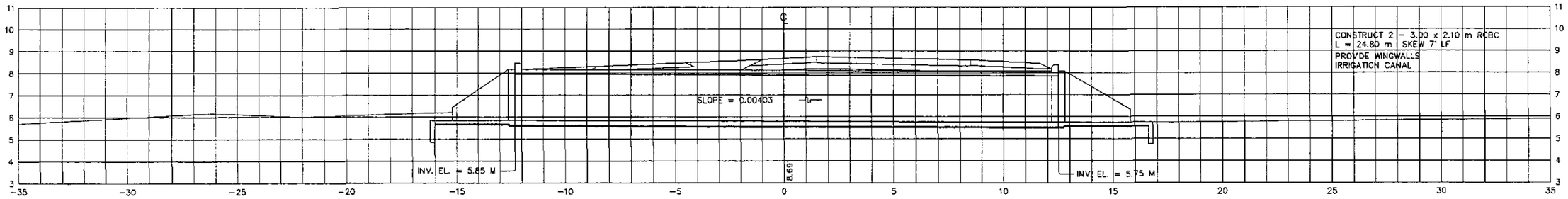

38+690

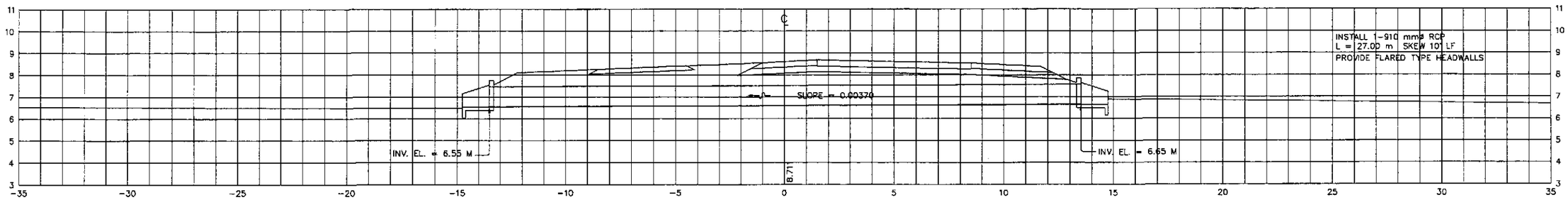

38+590

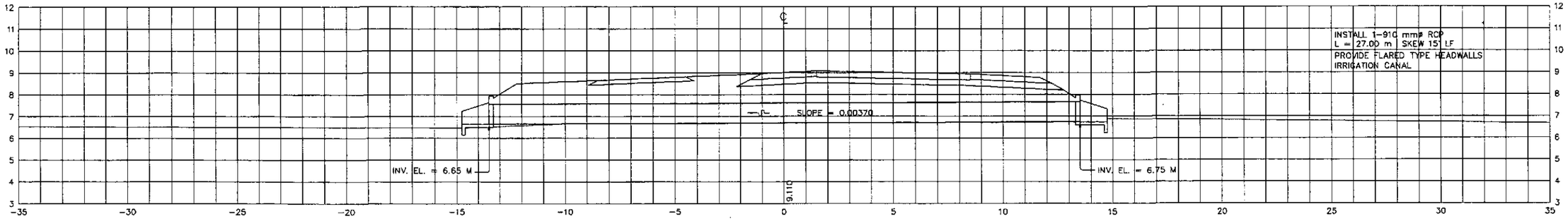

38+414

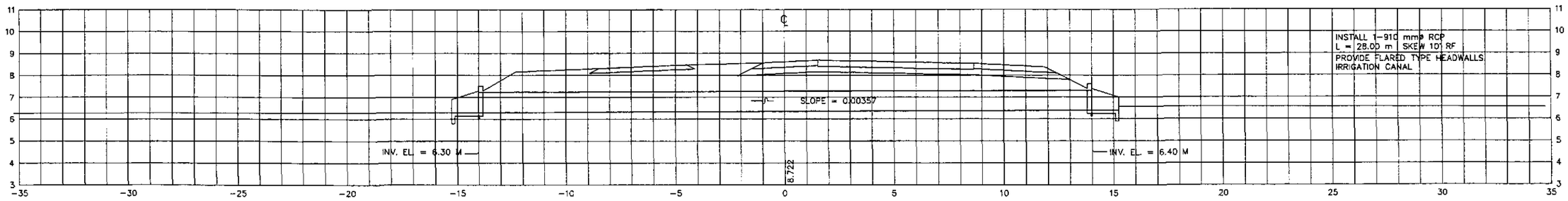

JICA
JAPAN INTERNATIONAL COOPERATION AGENCY

KEI KATAHIRA & ENGINEERS INTERNATIONAL
YEC YACHIYO ENGINEERING CO., LTD.

	DATE	SIGNATURE
DESIGNED	9/16/02	
CHECKED	9/18/02	
SUBMITTED	9/20/02	TEAM LEADER

REPUBLIC OF THE PHILIPPINES
DEPARTMENT OF PUBLIC WORKS AND HIGHWAYS

PJHL – PMO	BUREAU OF DESIGN		OFFICE OF THE SECRETARY	
Submitted By:	Reviewed By:	Recommended By:	Recommended By: (See cover sheet for Signature)	Approved By: (See cover sheet for Signature/Approval)
DANILO C. TRAJANO	JOSEFINA M. ALAGAR	GILBERTO S. REYES	MANUEL M. BONOAN	SIMEON A. DATUMANONG
Project Director	Chief, Highways Division	OIC, Director IV	Undersecretary	Secretary

PROJECT AND LOCATION :
THE DETAILED DESIGN STUDY ON UPGRADING INTER-URBAN HIGHWAY SYSTEM ALONG THE PAN-PHILIPPINE HIGHWAY (Plaridel, Cabanatuan and San Jose Bypasses)
PLARIDEL BYPASS - CONTRACT PACKAGE I

SCALE : 1:100 FULL SIZE A1

SHEET CONTENTS :
DRAINAGE CROSS-SECTION
ALONG BYPASS (INITIAL STAGE)
STA. 38+414 - STA. 38+720

SHEET NO. : DC-10

39+190

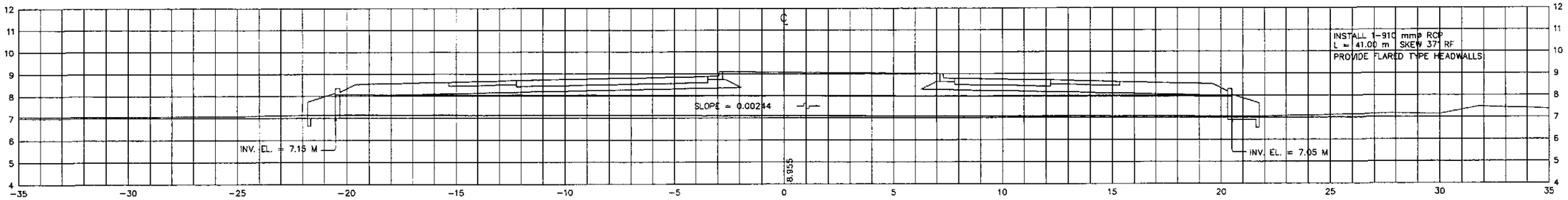

39+045

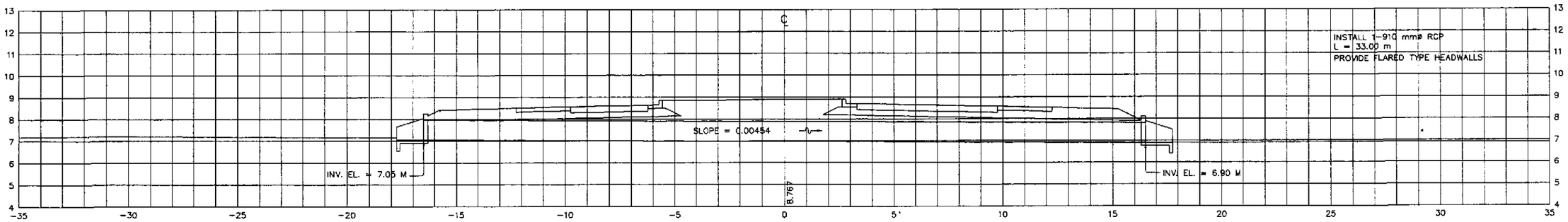

38+988

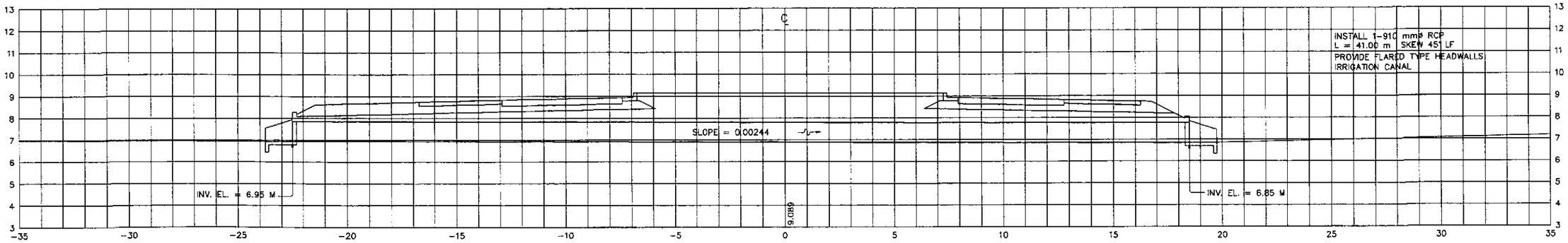

38+862

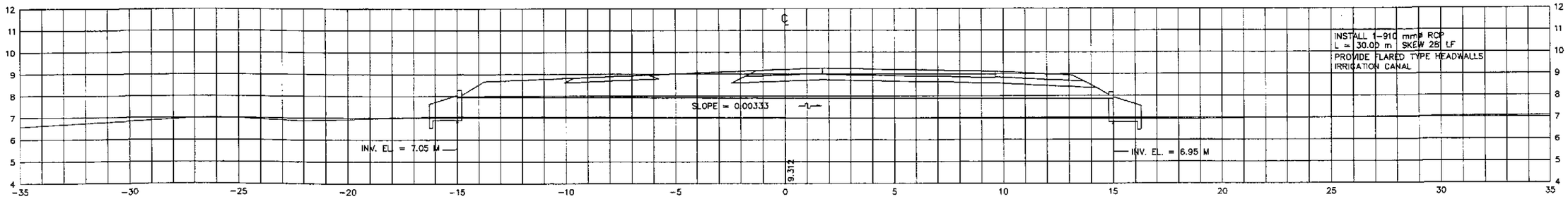

JICA
JAPAN INTERNATIONAL COOPERATION AGENCY

KATAHIRA & ENGINEERS INTERNATIONAL
YACHIYO ENGINEERING CO., LTD.

REPUBLIC OF THE PHILIPPINES
DEPARTMENT OF PUBLIC WORKS AND HIGHWAYS

	DATE	SIGNATURE	PJHL – PMO	BUREAU OF DESIGN		OFFICE OF THE SECRETARY	
DESIGNED	9/26/02	E. STA. MARIA					
CHECKED	9/26/02	H. MAGATANI	Submitted By:	Reviewed By:	Recommended By:	Recommended By: (See cover sheet for Signature)	Approved By: (See cover sheet for Signature/Approval)
SUBMITTED	9/20/02		DANILO C. TRAJANO	JOSEFINA M. ALAGAR	GILBERTO S. REYES	MANUEL M. BONDAN	SIMEON A. DATUMANONG
		TEAM LEADER	Project Director	Chief, Highways Division	OIC, Director IV	Undersecretary	Secretary

PROJECT AND LOCATION :
THE DETAILED DESIGN STUDY ON UPGRADING INTER-URBAN HIGHWAY SYSTEM ALONG THE PAN-PHILIPPINE HIGHWAY (Plaridel, Cabanatuan and San Jose Bypasses)
PLARIDEL BYPASS - CONTRACT PACKAGE I

SCALE : 1:100 FULL SIZE A1

SHEET CONTENTS :
DRAINAGE CROSS-SECTION
ALONG BYPASS (INITIAL STAGE)
STA. 38+862 - STA. 39+190

SHEET NO. : DC-11

39+595

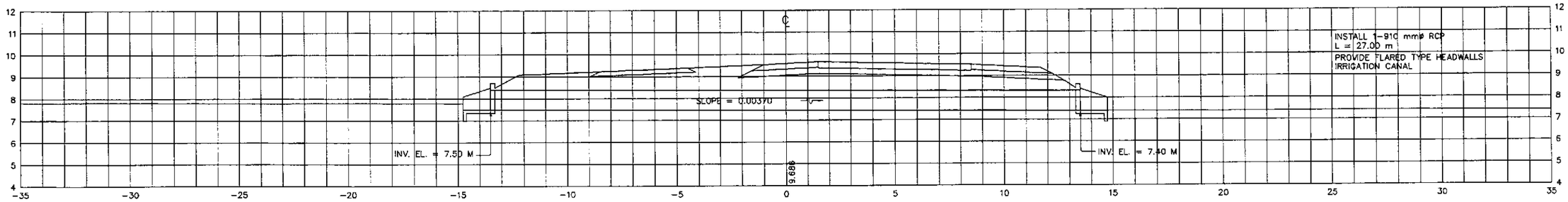

39+365

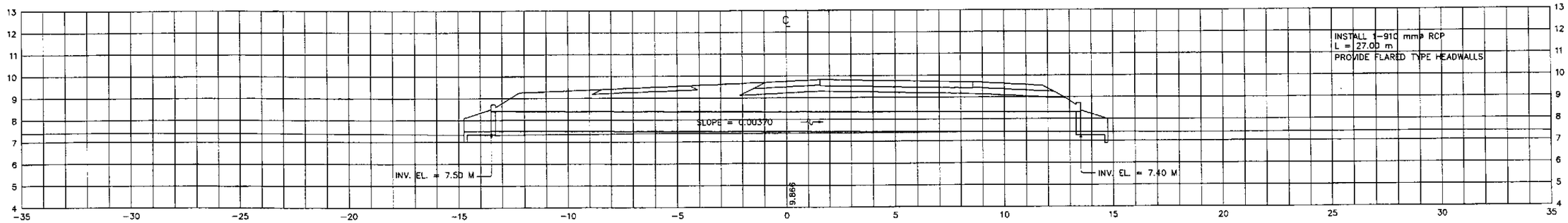

JICA
JAPAN INTERNATIONAL COOPERATION AGENCY

KATAHIRA & ENGINEERS INTERNATIONAL
YACHIYO ENGINEERING CO., LTD.

	DATE	SIGNATURE
DESIGNED	9/16/02	T. SHIGEMURA
CHECKED	9/18/02	A. HAKIM
SUBMITTED	9/20/02	TEAM LEADER

REPUBLIC OF THE PHILIPPINES
DEPARTMENT OF PUBLIC WORKS AND HIGHWAYS

PJHL – PMO	BUREAU OF DESIGN		OFFICE OF THE SECRETARY	
Submitted By:	Reviewed By:	Recommended By:	Recommended By: (See cover sheet for Signature)	Approved By: (See cover sheet for Signature/Approval)
DANILO C. TRAJANO	JOSEFINA M. ALAGAR	GILBERTO S. REYES	MANUEL M. BONOAN	SIMEON A. DATUMANONG
Project Director	Chief, Highways Division	OIC, Director IV	Undersecretary	Secretary

PROJECT AND LOCATION :
THE DETAILED DESIGN STUDY ON UPGRADING INTER-URBAN HIGHWAY SYSTEM ALONG THE PAN-PHILIPPINE HIGHWAY (Plaridel, Cabanatuan and San Jose Bypasses)
PLARIDEL BYPASS - CONTRACT PACKAGE I

SCALE : 1:100 FULL SIZE A1

SHEET CONTENTS :
DRAINAGE CROSS-SECTION
ALONG BYPASS (INITIAL STAGE)
STA. 39+365 - STA. 39+595

SHEET NO. : DC-12

0+770

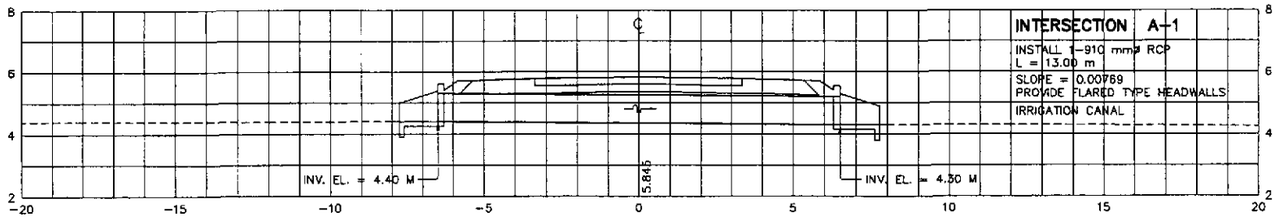

0+580

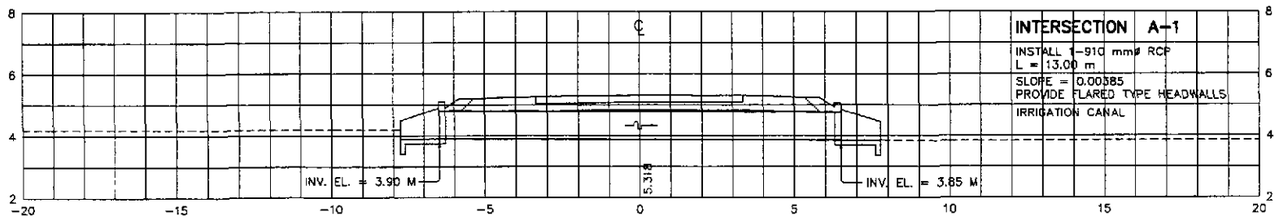

0+430

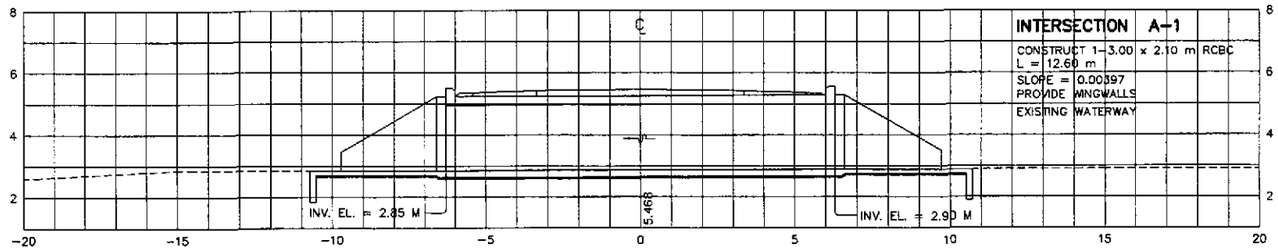

0+280

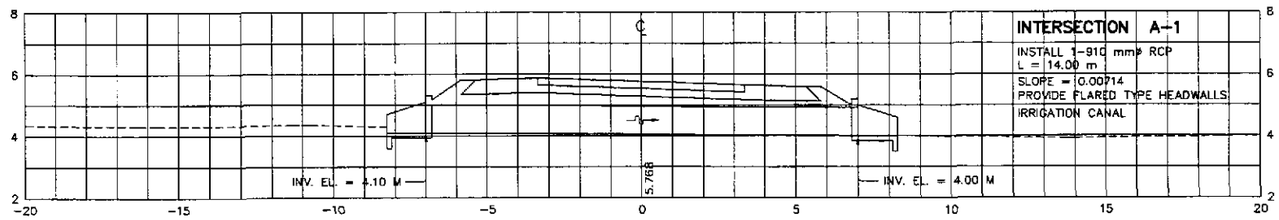

0+050

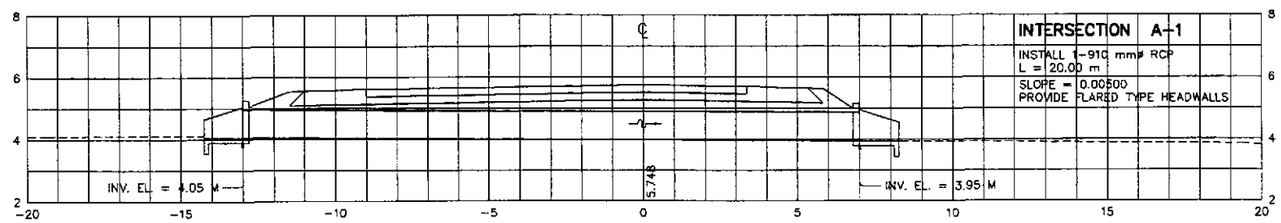

JICA
JAPAN INTERNATIONAL COOPERATION AGENCY

KEI KATAHIRA & ENGINEERS INTERNATIONAL
YEC YACHIYO ENGINEERING CO., LTD.

	DATE	SIGNATURE
DESIGNED	9/18/02	
CHECKED	9/18/02	
SUBMITTED	9/20/02	

REPUBLIC OF THE PHILIPPINES
DEPARTMENT OF PUBLIC WORKS AND HIGHWAYS

PJHL - PMO	BUREAU OF DESIGN		OFFICE OF THE SECRETARY	
Submitted By:	Reviewed By:	Recommended By:	Recommended By: (See cover sheet for Signature)	Approved By: (See cover sheet for Signature/Approval)
DANILO C. TRAJANO	JOSEFINA M. ALAGAR	GILBERTO S. REYES	MANUEL M. BONOAN	SIMEON A. DATUMANONG
Project Director	Chief, Highways Division	OIC, Director IV	Undersecretary	Secretary

PROJECT AND LOCATION :
THE DETAILED DESIGN STUDY ON UPGRADING INTER-URBAN HIGHWAY SYSTEM ALONG THE PAN-PHILIPPINE HIGHWAY (Plaridel, Cabanatuan and San Jose Bypasses)
PLARIDEL BYPASS - CONTRACT PACKAGE I

SCALE : 1:100 FULL SIZE A1

SHEET CONTENTS :
DRAINAGE CROSS-SECTION
ALONG ACCESS ROAD
INTERSECTION A-1

SHEET NO. : DC-13

1+204

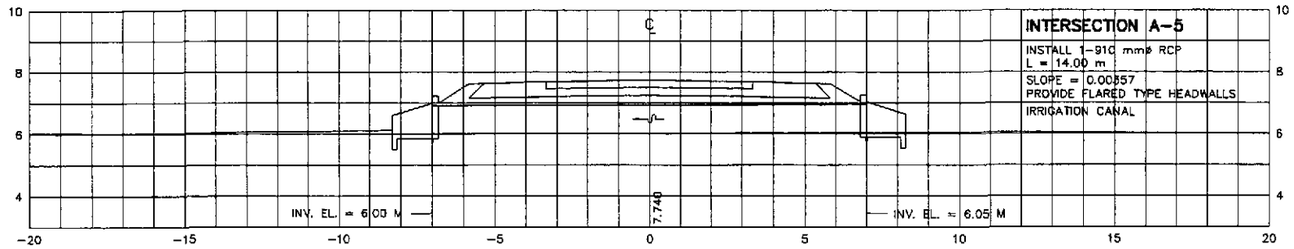

1+100

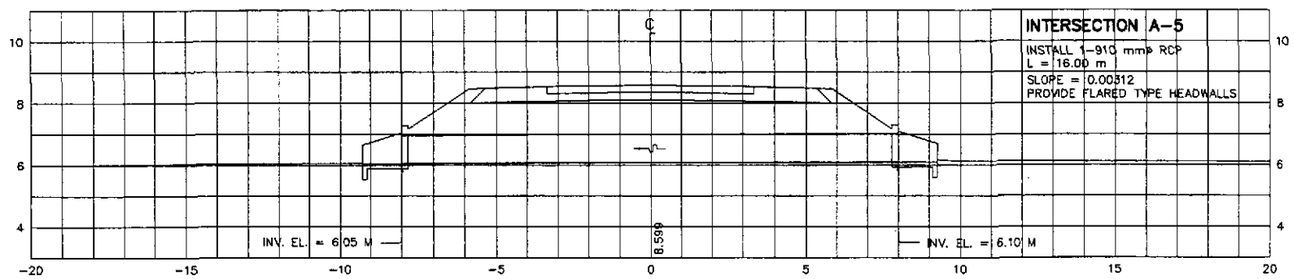

0+980

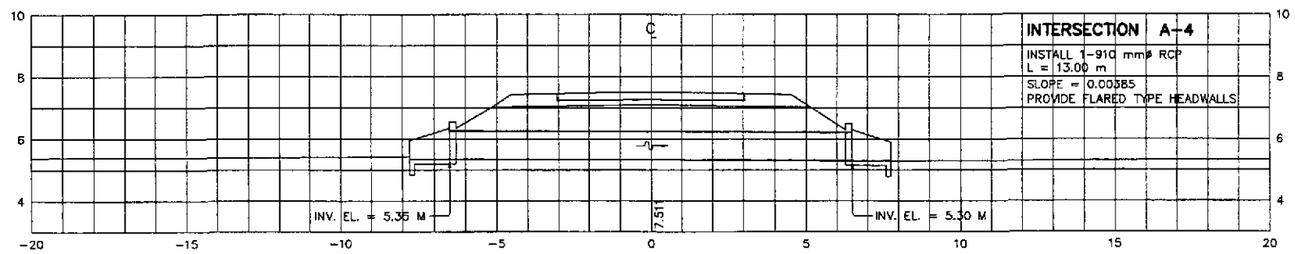

1+030

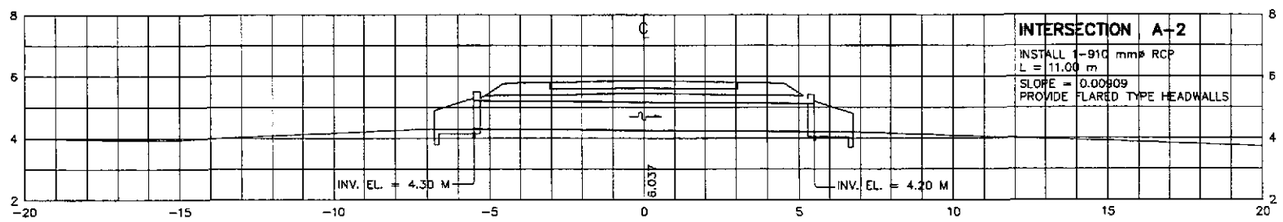

0+970

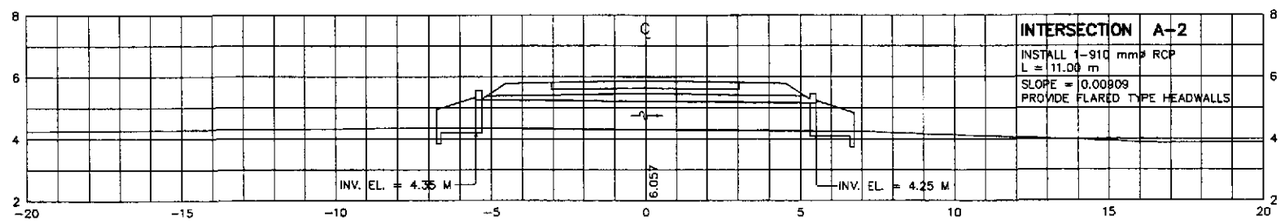

JICA
JAPAN INTERNATIONAL COOPERATION AGENCY
KEI KATAHIRA & ENGINEERS INTERNATIONAL
YEC YACHIYO ENGINEERING CO., LTD.

	DATE	SIGNATURE *	PJHL – PMO	BUREAU OF DESIGN		OFFICE OF THE SECRETARY	
DESIGNED	9/16/02	F. STA. MARIA					
CHECKED	9/18/02	A. HAKIM	Submitted By:	Reviewed By:	Recommended By:	Recommended By: (See cover sheet for Signature)	Approved By: (See cover sheet for Signature/Approval)
SUBMITTED	9/20/02	TEAM LEADER	DANILO C. TRAJANO Project Director	JOSEFINA M. ALAGAR Chief, Highways Division	GILBERTO S. REYES DIC, Director IV	MANUEL M. BONOAN Undersecretary	SIMEON A. DATUMANONG Secretary

REPUBLIC OF THE PHILIPPINES
DEPARTMENT OF PUBLIC WORKS AND HIGHWAYS

PROJECT AND LOCATION :
THE DETAILED DESIGN STUDY ON UPGRADING INTER-URBAN HIGHWAY SYSTEM ALONG THE PAN-PHILIPPINE HIGHWAY (Plaridel, Cabanatuan and San Jose Bypasses)
PLARIDEL BYPASS - CONTRACT PACKAGE I

SCALE : 1:100 FULL SIZE A1

SHEET CONTENTS :
DRAINAGE CROSS-SECTION
ALONG ACCESS ROAD
INTERSECTION A-2, A-4, A-5

SHEET NO. : DC-14

2+218

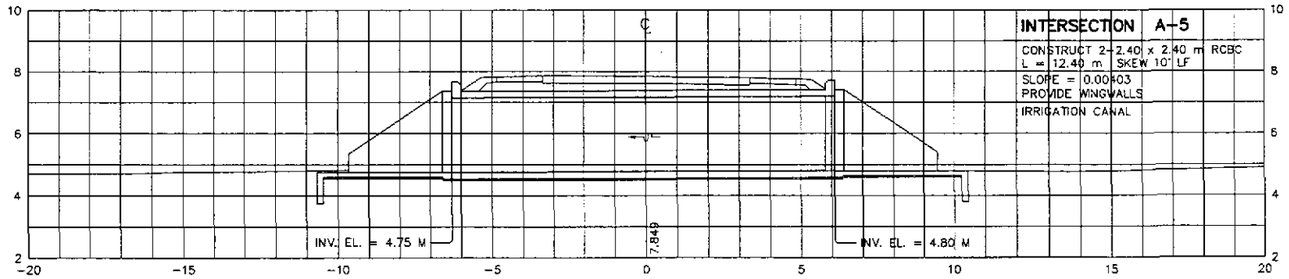

2+080

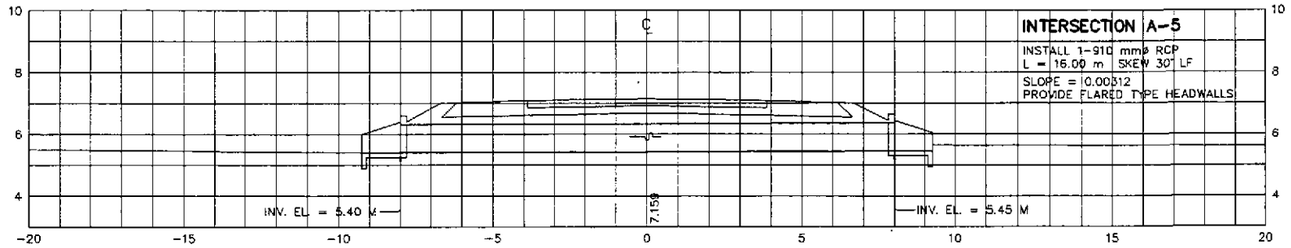

1+940

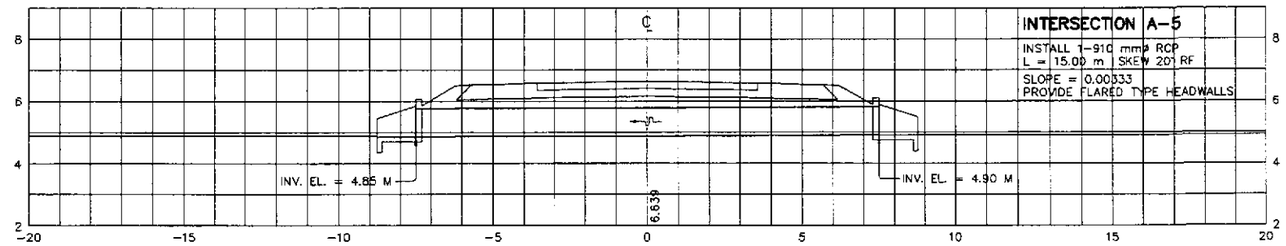

1+776

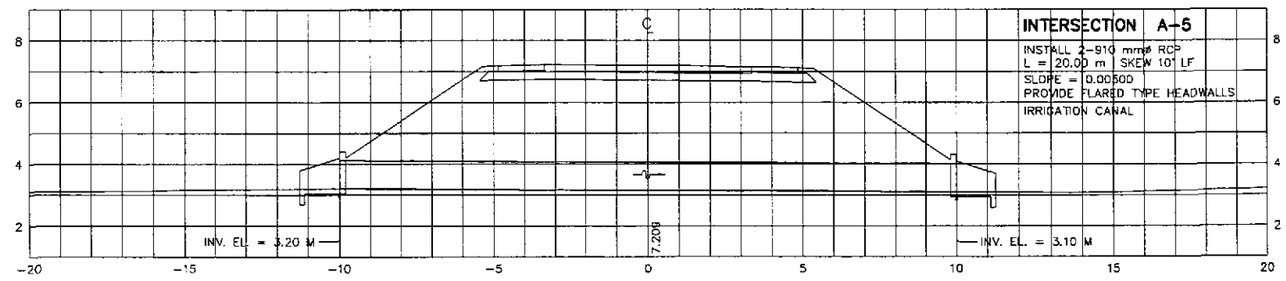

1+490

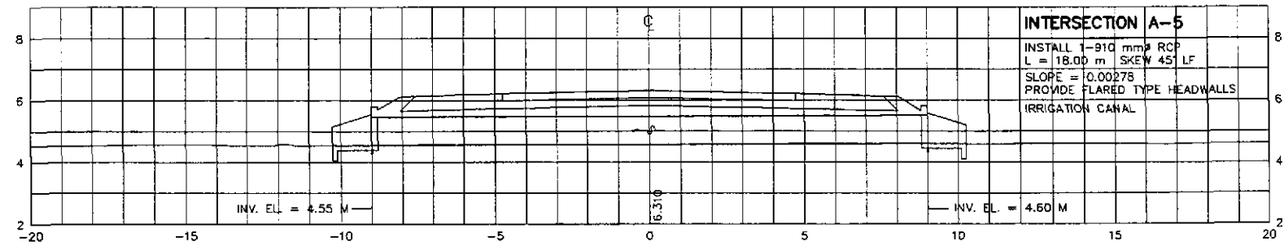

JICA
JAPAN INTERNATIONAL COOPERATION AGENCY

KEI KATAHIRA & ENGINEERS INTERNATIONAL
YEC YACHIYO ENGINEERING CO., LTD.

	DATE	SIGNATURE
DESIGNED	9/16/02	P. STA. CLARA
CHECKED	9/20/02	
SUBMITTED	9/20/02	TEAM LEADER

REPUBLIC OF THE PHILIPPINES
DEPARTMENT OF PUBLIC WORKS AND HIGHWAYS

PJHL - PMO	BUREAU OF DESIGN		OFFICE OF THE SECRETARY	
Submitted By:	Reviewed By:	Recommended By:	Recommended By: (See cover sheet for Signature)	Approved By: (See cover sheet for Signature/Approval)
DANILO C. TRAJANO	JOSEFINA M. ALAGAR	GILBERTO S. REYES	MANUEL M. BONOAN	SIMEON A. DATUMANONG
Project Director	Chief, Highways Division	OIC, Director IV	Undersecretary	Secretary

PROJECT AND LOCATION :
THE DETAILED DESIGN STUDY ON UPGRADING INTER-URBAN HIGHWAY SYSTEM ALONG THE PAN-PHILIPPINE HIGHWAY (Plaridel, Cabanatuan and San Jose Bypasses)
PLARIDEL BYPASS - CONTRACT PACKAGE I

SCALE : 1:100 FULL SIZE A1

SHEET CONTENTS :
DRAINAGE CROSS-SECTION
ALONG ACCESS ROAD
INTERSECTION A-5

SHEET NO. : DC-15

2+968

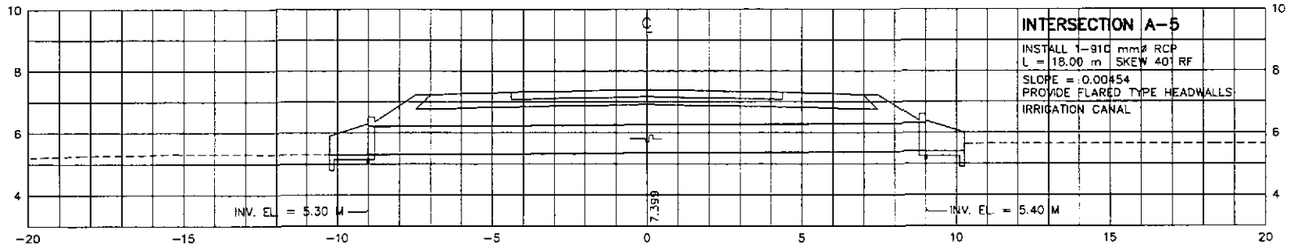

2+869

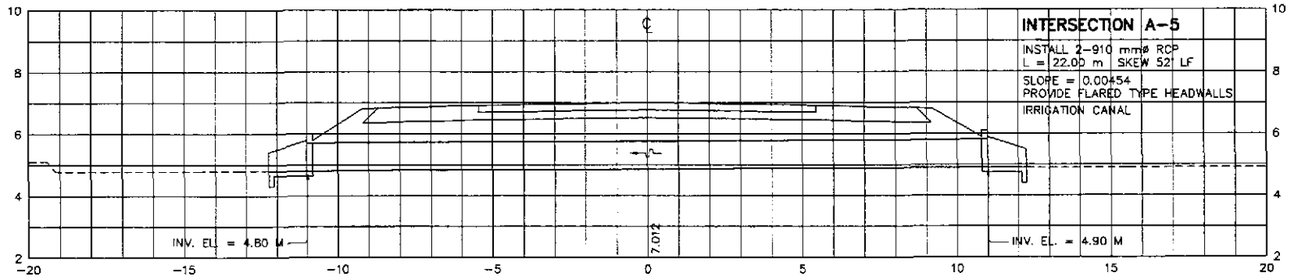

2+760

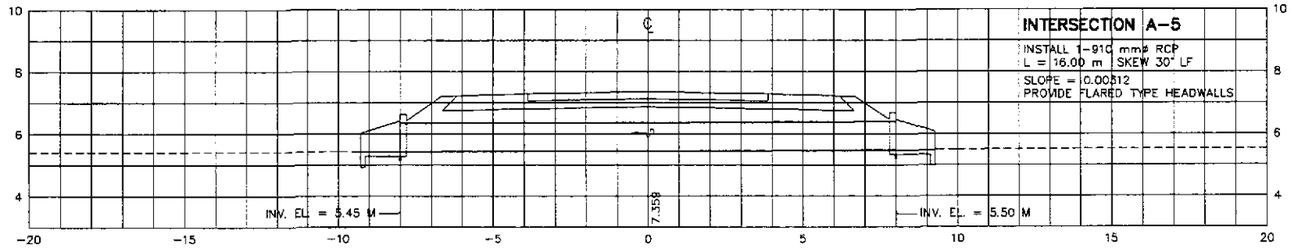

2+500

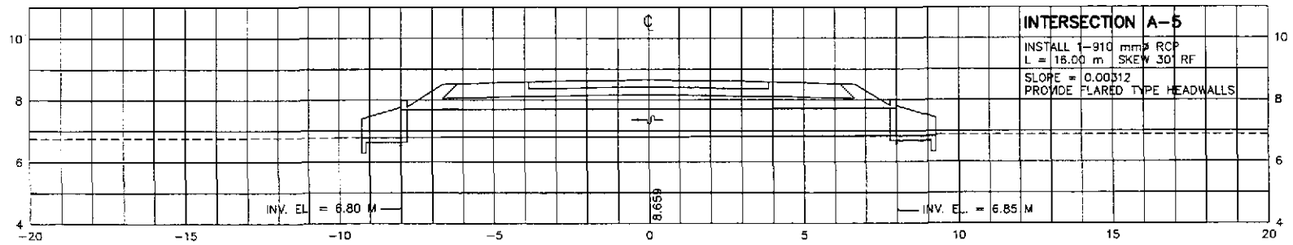

2+363

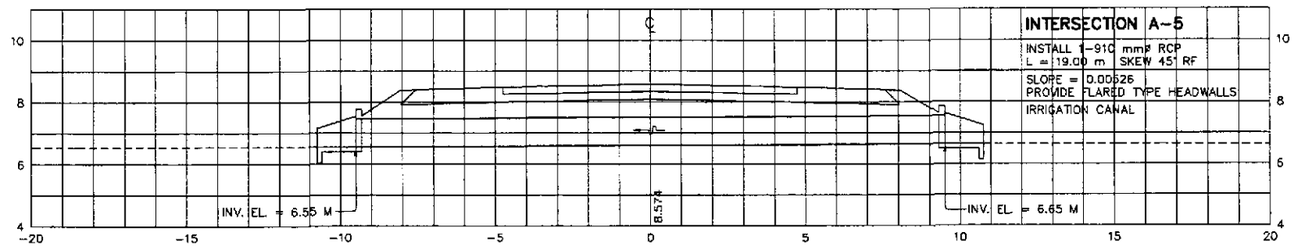

		DATE	SIGNATURE	REPUBLIC OF THE PHILIPPINES DEPARTMENT OF PUBLIC WORKS AND HIGHWAYS					PROJECT AND LOCATION :	SCALE :	SHEET CONTENTS :	SHEET NO. :
JICA JAPAN INTERNATIONAL COOPERATION AGENCY	DESIGNED	9/10/02	F. STO. TOMAS	PJHL – PMO	BUREAU OF DESIGN		OFFICE OF THE SECRETARY		THE DETAILED DESIGN STUDY ON UPGRADING INTER-URBAN HIGHWAY SYSTEM ALONG THE PAN-PHILIPPINE HIGHWAY (Plaridel, Cabanatuan and San Jose Bypasses)	1:100	DRAINAGE CROSS-SECTION ALONG ACCESS ROAD INTERSECTION A-5	DC-16
KEI KATAHIRA & ENGINEERS INTERNATIONAL / YEC YACHIYO ENGINEERING CO., LTD.	CHECKED	9/18/02		Submitted By:	Reviewed By:	Recommended By:	Recommended By: (See cover sheet for Signature)	Approved By: (See cover sheet for Signature/Approval)	PLARIDEL BYPASS - CONTRACT PACKAGE I	FULL SIZE A1		
	SUBMITTED	9/20/02	TEAM LEADER	DANILO C. TRAJANO Project Director	JOSEFINA M. ALAGAR Chief, Highways Division	GILBERTO S. REYES OIC, Director IV	MANUEL M. BONDAN Undersecretary	SIMEON A. DATUMANONG Secretary				

1+020

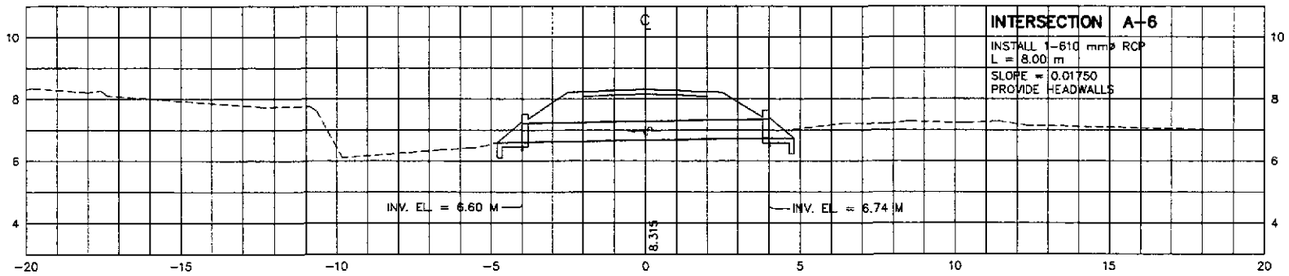

0+960

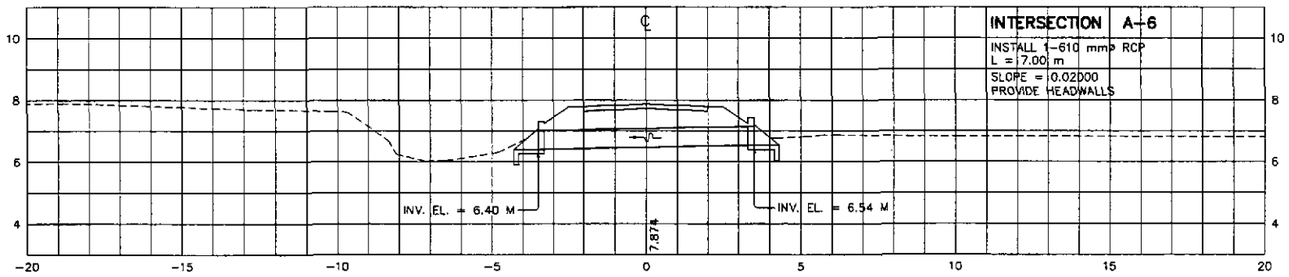

3+200

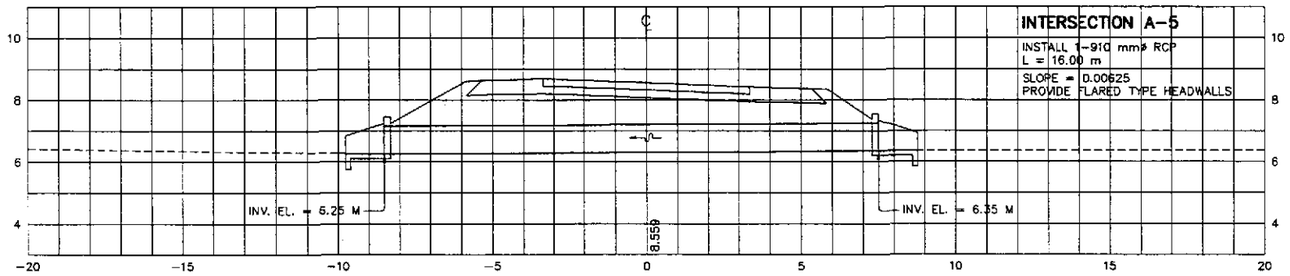

2+980

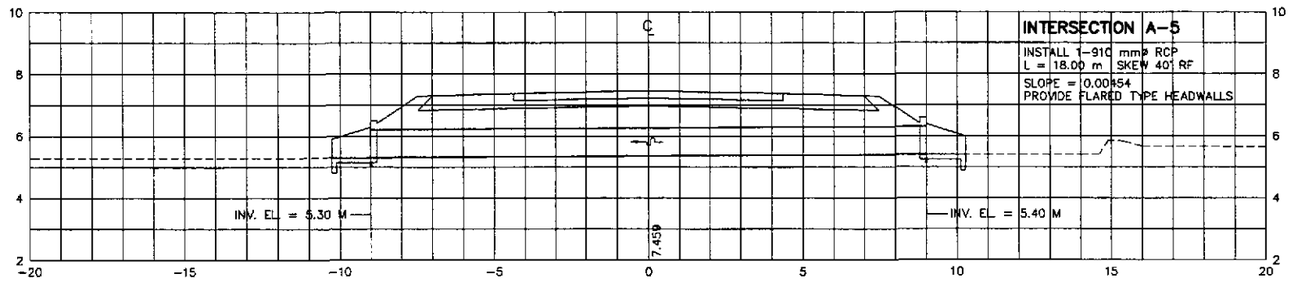

JICA JAPAN INTERNATIONAL COOPERATION AGENCY	DATE	SIGNATURE	REPUBLIC OF THE PHILIPPINES DEPARTMENT OF PUBLIC WORKS AND HIGHWAYS				
KEI KATAHIRA & ENGINEERS INTERNATIONAL / YEC YACHIYO ENGINEERING CO., LTD.	DESIGNED 9/18/02	K. STA. MARIA	PUHL – PMO	BUREAU OF DESIGN		OFFICE OF THE SECRETARY	
	CHECKED 9/18/02	H. HAKIM	Submitted By:	Reviewed By:	Recommended By:	Recommended By: (See cover sheet for Signature)	Approved By: (See cover sheet for Signature/Approval)
	SUBMITTED 9/20/02	M. KAWAI TEAM LEADER	DANILO C. TRAJANO Project Director	JOSEFINA M. ALAGAR Chief, Highways Division	GILBERTO S. REYES OIC, Director IV	MANUEL M. BONDAN Undersecretary	SIMEON A. DATUMANONG Secretary

PROJECT AND LOCATION :	SCALE :	SHEET CONTENTS :	SHEET NO. :
THE DETAILED DESIGN STUDY ON UPGRADING INTER-URBAN HIGHWAY SYSTEM ALONG THE PAN-PHILIPPINE HIGHWAY (Plaridel, Cabanatuan and San Jose Bypasses)	1:100	DRAINAGE CROSS-SECTION ALONG ACCESS ROAD INTERSECTION A-5, A-6	DC-17
PLARIDEL BYPASS - CONTRACT PACKAGE I	FULL SIZE A1		

0+020

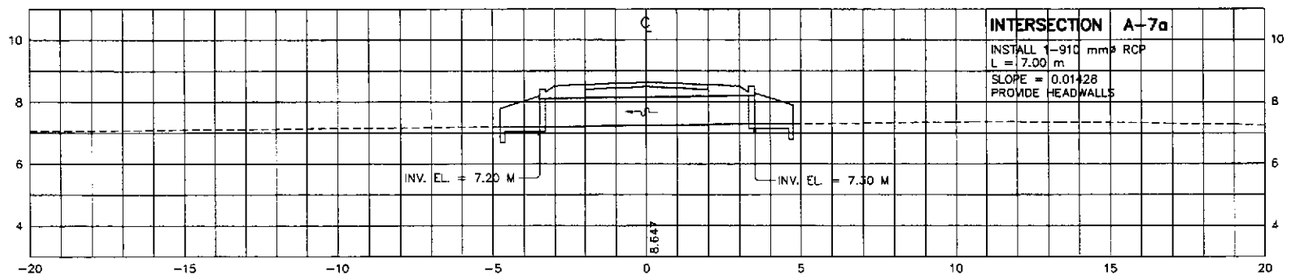

1+080

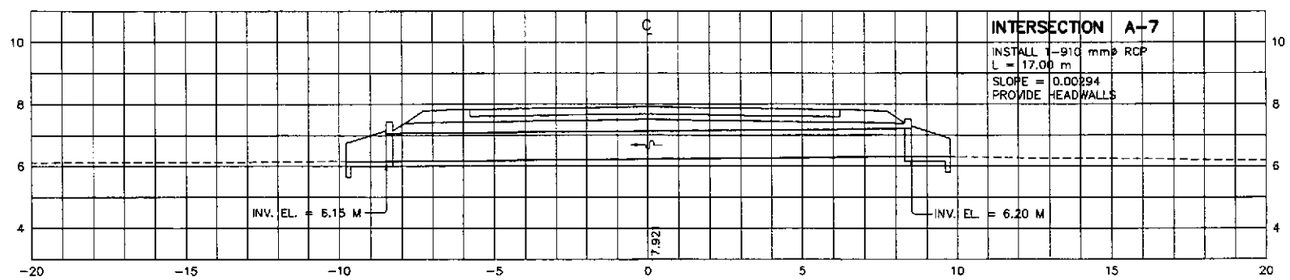

JICA
JAPAN INTERNATIONAL COOPERATION AGENCY

KATAHIRA & ENGINEERS INTERNATIONAL
YACHIYO ENGINEERING CO., LTD.

	DATE	SIGNATURE
DESIGNED	9/16/02	F. STA. MARIA
CHECKED	9/18/02	A. HAKIM
SUBMITTED	9/20/02	TEAM LEADER

REPUBLIC OF THE PHILIPPINES
DEPARTMENT OF PUBLIC WORKS AND HIGHWAYS

PJHL - PMO	BUREAU OF DESIGN		OFFICE OF THE SECRETARY	
Submitted By:	Reviewed By:	Recommended By:	Recommended By: (See cover sheet for Signature)	Approved By: (See cover sheet for Signature/Approval)
DANILO C. TRAJANO	JOSEFINA M. ALAGAR	GILBERTO S. REYES	MANUEL M. BONDAN	SIMEON A. DATUMANONG
Project Director	Chief, Highways Division	OIC, Director IV	Undersecretary	Secretary

PROJECT AND LOCATION :
THE DETAILED DESIGN STUDY ON UPGRADING INTER-URBAN HIGHWAY SYSTEM ALONG THE PAN-PHILIPPINE HIGHWAY (Plaridel, Cabanatuan and San Jose Bypasses)
PLARIDEL BYPASS - CONTRACT PACKAGE I

SCALE : 1:100 FULL SIZE A1

SHEET CONTENTS :
DRAINAGE CROSS-SECTION
ALONG ACCESS ROAD
INTERSECTION A-7, A-7a

SHEET NO. : DC-18

33+320

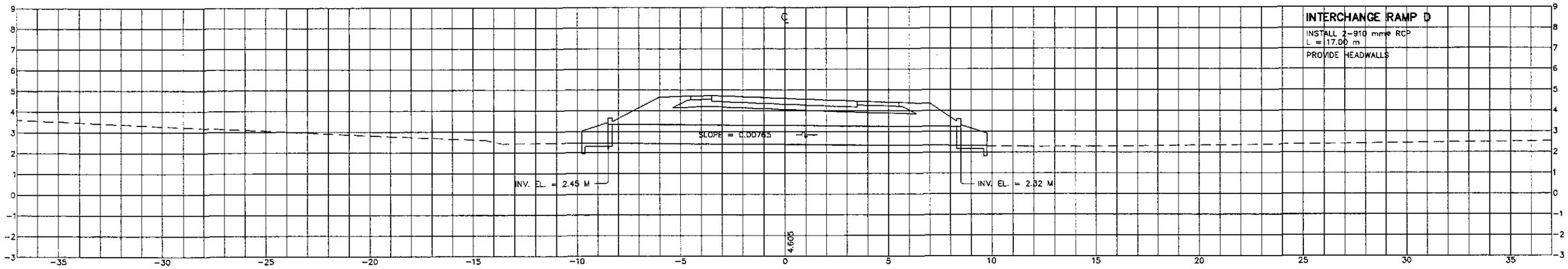

33+155.90

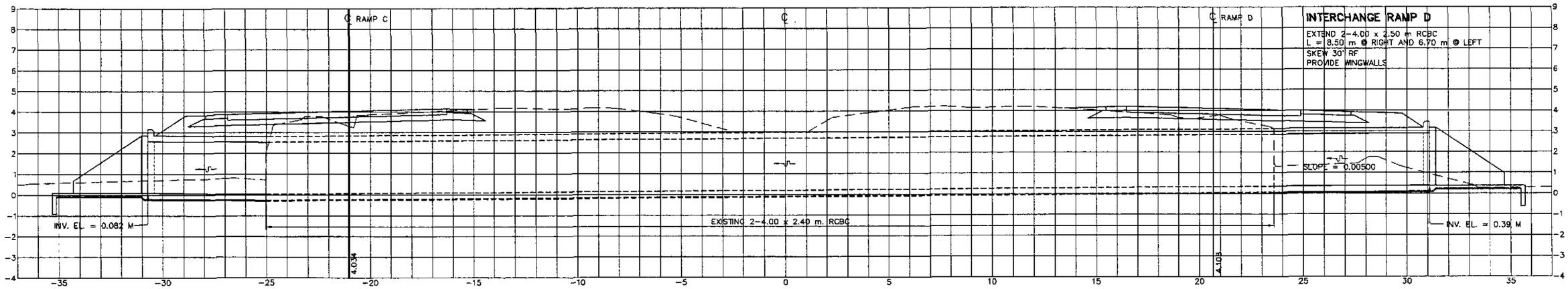

33+300

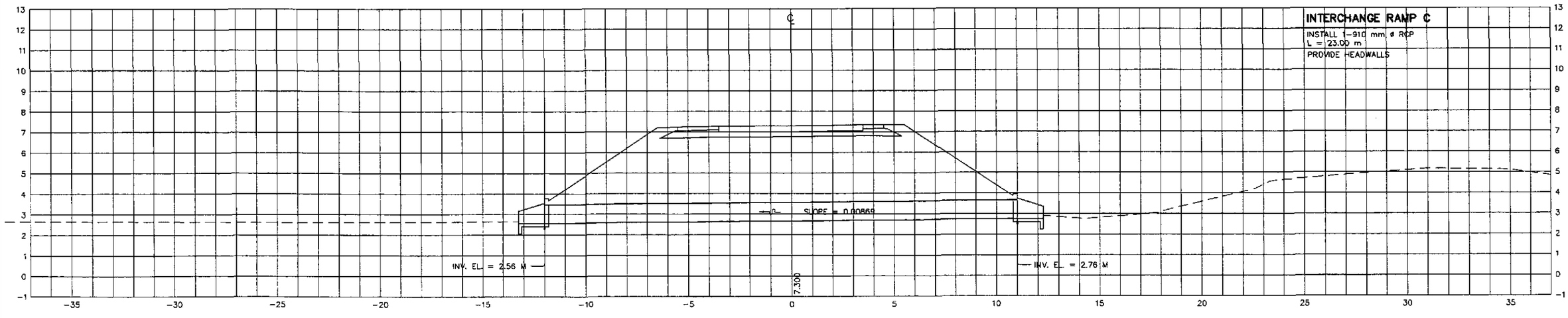

JICA
JAPAN INTERNATIONAL COOPERATION AGENCY

KATAHIRA & ENGINEERS INTERNATIONAL
YACHIYO ENGINEERING CO., LTD.

	DATE	SIGNATURE
DESIGNED	9/10/02	F. SIN MARK
CHECKED	9/10/02	
SUBMITTED	9/10/02	TEAM LEADER

REPUBLIC OF THE PHILIPPINES
DEPARTMENT OF PUBLIC WORKS AND HIGHWAYS

PJHL – PMO	BUREAU OF DESIGN		OFFICE OF THE SECRETARY	
Submitted By:	Reviewed By:	Recommended By:	Recommended By: (See cover sheet for Signature)	Approved By: (See cover sheet for Signature/Approval)
DANILO C. TRAJANO	JOSEFINA M. ALAGAR	GILBERTO S. REYES	MANUEL M. BONOAN	SIMEON A. DATUMANONG
Project Director	Chief, Highways Division	OIC, Director IV	Undersecretary	Secretary

PROJECT AND LOCATION :
THE DETAILED DESIGN STUDY ON UPGRADING INTER-URBAN HIGHWAY SYSTEM ALONG THE PAN-PHILIPPINE HIGHWAY (Plaridel, Cabanatuan and San Jose Bypasses)
PLARIDEL BYPASS - CONTRACT PACKAGE I

SCALE : 1:100 FULL SIZE A1

SHEET CONTENTS :
DRAINAGE CROSS-SECTIONS
ALONG BUROL INTERCHANGE
RAMP C and D

SHEET NO. : DC-19

34+000

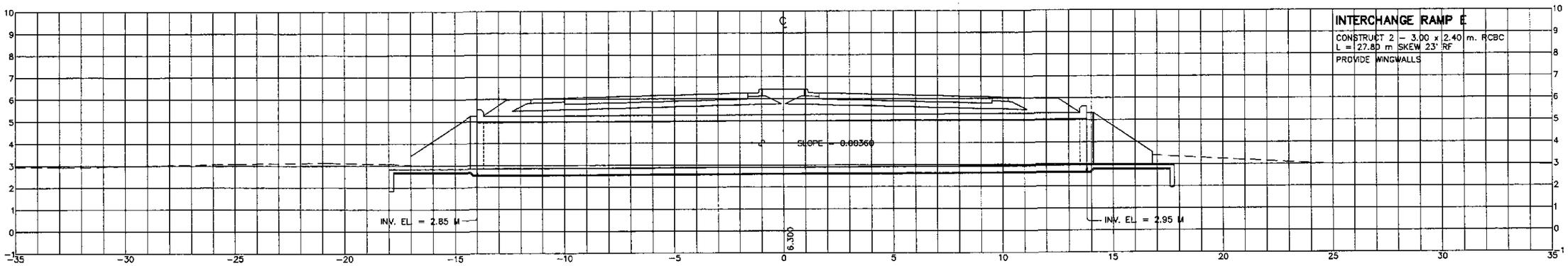

33+500

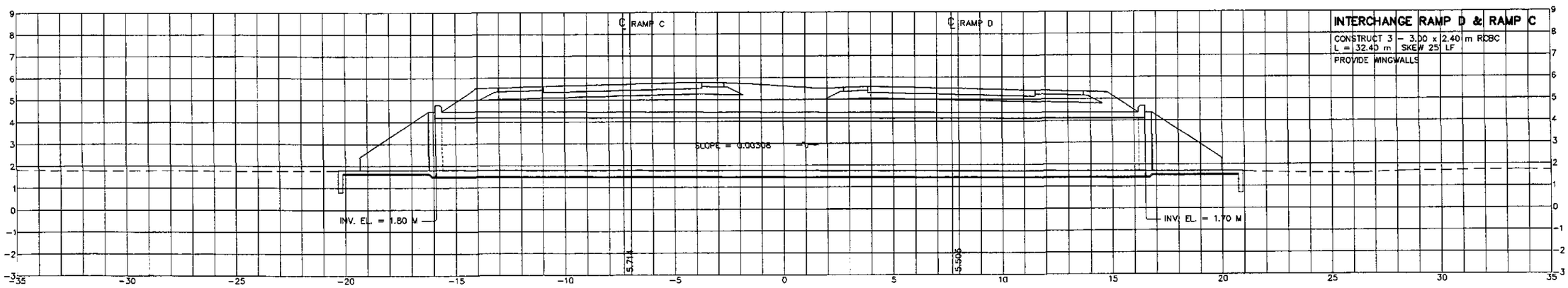

JICA JAPAN INTERNATIONAL COOPERATION AGENCY		DATE	SIGNATURE	REPUBLIC OF THE PHILIPPINES DEPARTMENT OF PUBLIC WORKS AND HIGHWAYS		
KATAHIRA & ENGINEERS INTERNATIONAL / YACHIYO ENGINEERING CO., LTD.	DESIGNED	9/20/02	F. STA. MARIA	PJHL – PMO	BUREAU OF DESIGN	OFFICE OF THE SECRETARY
	CHECKED	9/20/02	A. HAKIM	Submitted By:	Reviewed By: / Recommended By:	Recommended By: (See cover sheet for Signature) / Approved By: (See cover sheet for Signature/Approval)
	SUBMITTED	9/20/02	TEAM LEADER	DANILO C. TRAJANO, Project Director	JOSEFINA M. ALAGAR, Chief, Highways Division / GILBERTO S. REYES, OIC, Director V	MANUEL M. BONOAN, Undersecretary / SIMEON A. DATUMANONG, Secretary

PROJECT AND LOCATION :	SCALE :	SHEET CONTENTS :	SHEET NO. :
THE DETAILED DESIGN STUDY ON UPGRADING INTER-URBAN HIGHWAY SYSTEM ALONG THE PAN-PHILIPPINE HIGHWAY (Plaridel, Cabanatuan and San Jose Bypasses) PLARIDEL BYPASS - CONTRACT PACKAGE I	1:100 FULL SIZE A1	DRAINAGE CROSS-SECTIONS ALONG BUROL INTERCHANGE RAMP D and E	DC-20

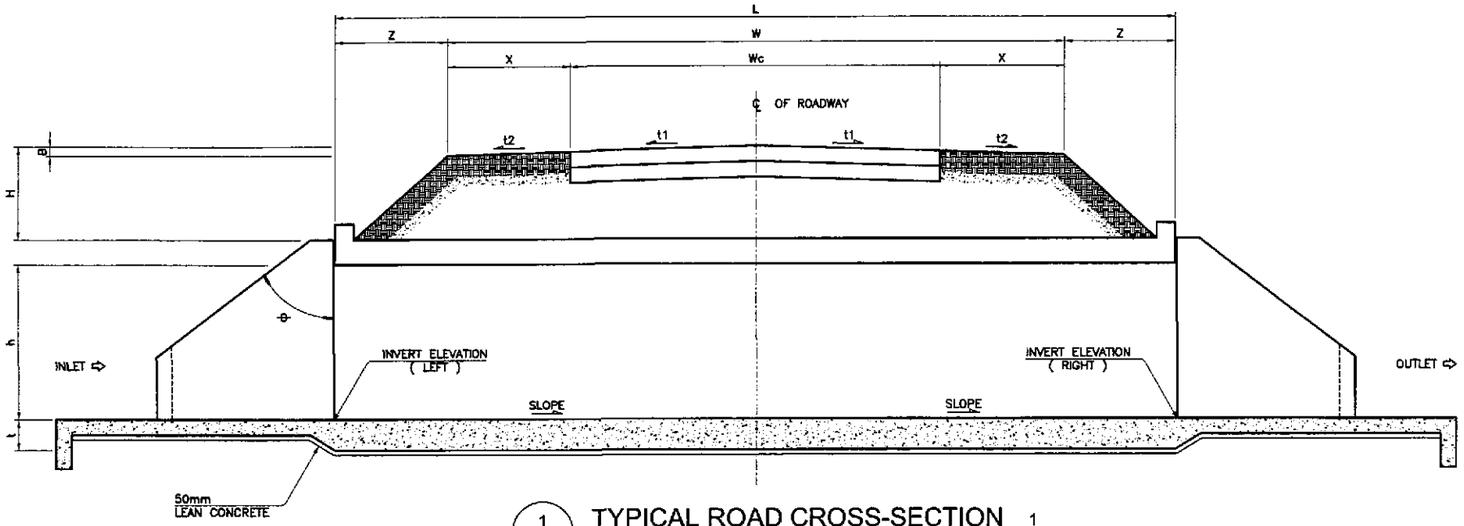

1 DS-01 TYPICAL ROAD CROSS-SECTION 1
NOT TO SCALE

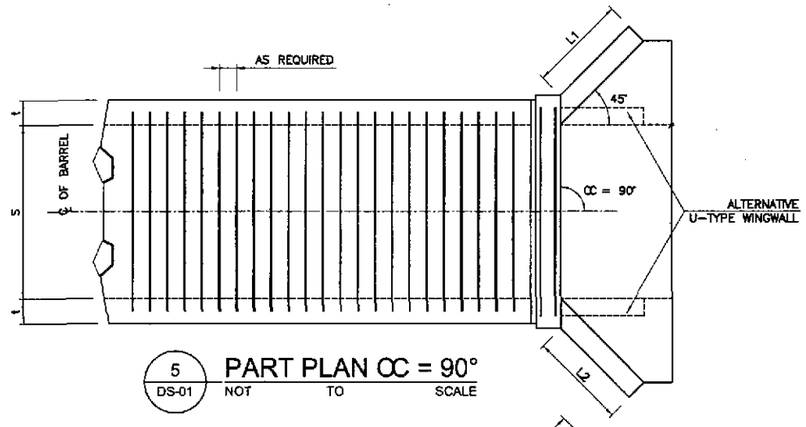

5 DS-01 PART PLAN CC = 90°
NOT TO SCALE

LEGEND :

- W — WIDTH OF ROADWAY FORMATION
- X — WIDTH OF SHOULDER
- Wc — WIDTH OF CARRIAGEWAY
- H — COVER ABOVE THE CULVERT
- L — TOTAL LENGTH OF BARREL
- t1 — SLOPE OF CARRIAGEWAY
- t2 — SLOPE OF SHOULDER
- Z — [(H+t) − (B+200)] tan θ
- B — $xt_2+0.5t_1Wc$
- h — HEIGHT OF CULVERT OPENING
- t — THICKNESS OF CULVERT WALL OR SLAB
- θ — SLOPE OF EMBANKMENT
- CC — ANGLE OF SKEW

HORIZONTAL SKEW ANGLE CC	L (mm)
90°	W+2tan θ [(H+t) − (B+200)]
60°	1.1547 (W+2tan θ [(H+t)−(B+200)])
45°	1.4142 (W+2tan θ [(H+t)−(B+200)])

NOTES:

1. ALL DIMENSIONS ARE IN MILLIMETERS UNLESS OTHERWISE SPECIFIED.
3. MINIMUM CONCRETE COVER SHALL BE 40 CLEAR. WHEN HEIGHT OF FILL H=0 INCREASE COVER BY 30.

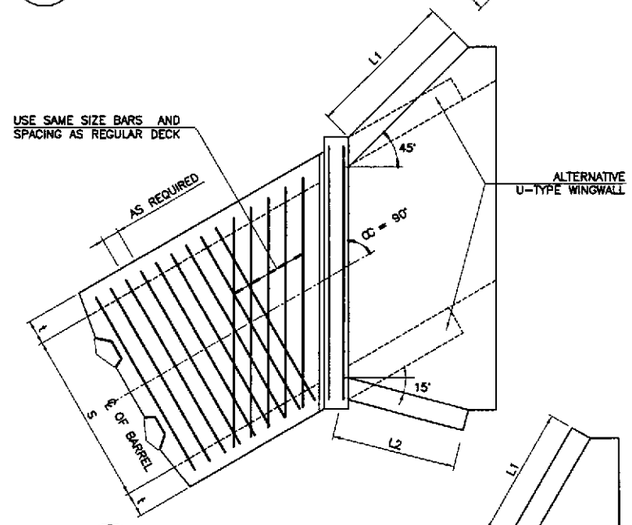

6 DS-01 PART PLAN CC = 60°
NOT TO SCALE

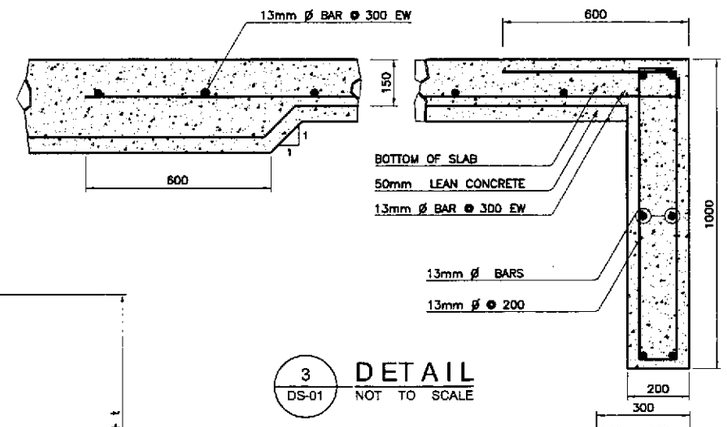

3 DS-01 DETAIL
NOT TO SCALE

4 DS-01 DETAIL
NOT TO SCALE

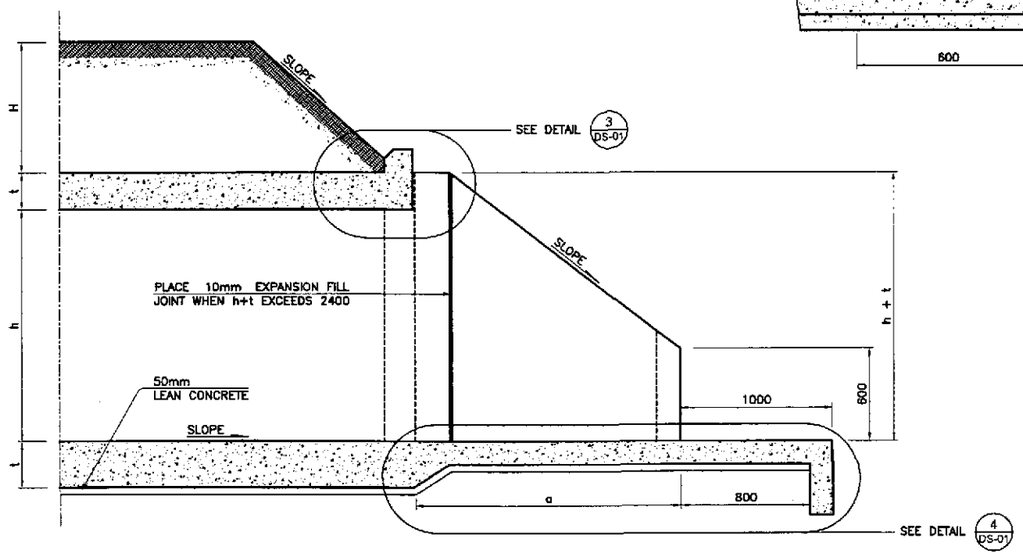

2 DS-01 PART SECTION ALONG ℄ OF CULVERT
NOT TO SCALE

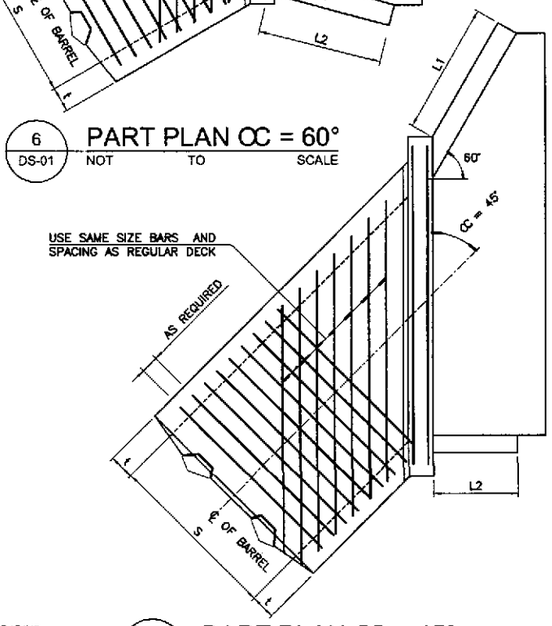

7 DS-01 PART PLAN CC = 45°
NOT TO SCALE

STANDARD DETAILS OF REINFORCED CONCRETE BOX CULVERT (RCBC)

JICA
JAPAN INTERNATIONAL COOPERATION AGENCY
KEI KATAHIRA & ENGINEERS INTERNATIONAL
YEC YACHIYO ENGINEERING CO., LTD.

	DATE	SIGNATURE
DESIGNED	9/16/02	
CHECKED	9/18/02	
SUBMITTED	9/20/02	TEAM LEADER

REPUBLIC OF THE PHILIPPINES
DEPARTMENT OF PUBLIC WORKS AND HIGHWAYS

PJHL – PMO	BUREAU OF DESIGN		OFFICE OF THE SECRETARY	
Submitted By:	Reviewed By:	Recommended By:	Recommended By: (See cover sheet for Signature)	Approved By: (See cover sheet for Signature/Approval)
DANILO C. TRAJANO	JOSEFINA M. ALAGAR	GILBERTO S. REYES	MANUEL M. BONDAN	SIMEON A. DATUMANONG
Project Director	Chief, Highways Division	OIC, Director IV	Undersecretary	Secretary

PROJECT AND LOCATION :
THE DETAILED DESIGN STUDY ON UPGRADING INTER-URBAN HIGHWAY SYSTEM ALONG THE PAN-PHILIPPINE HIGHWAY (Plaridel, Cabanatuan and San Jose Bypasses)
PLARIDEL BYPASS - CONTRACT PACKAGE I

SCALE : 1:100 FULL SIZE A1

SHEET CONTENTS : STANDARD DETAILS OF REINFORCED CONCRETE BOX CULVERT (RCBC)

SHEET NO. : DS-01

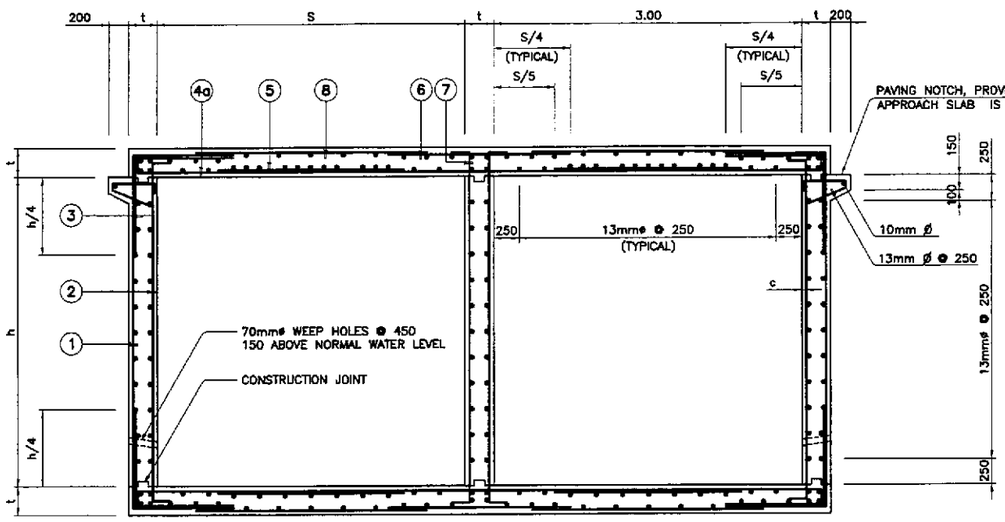

2 DS-02 DOUBLE BARREL SECTION
SCALE 1:30

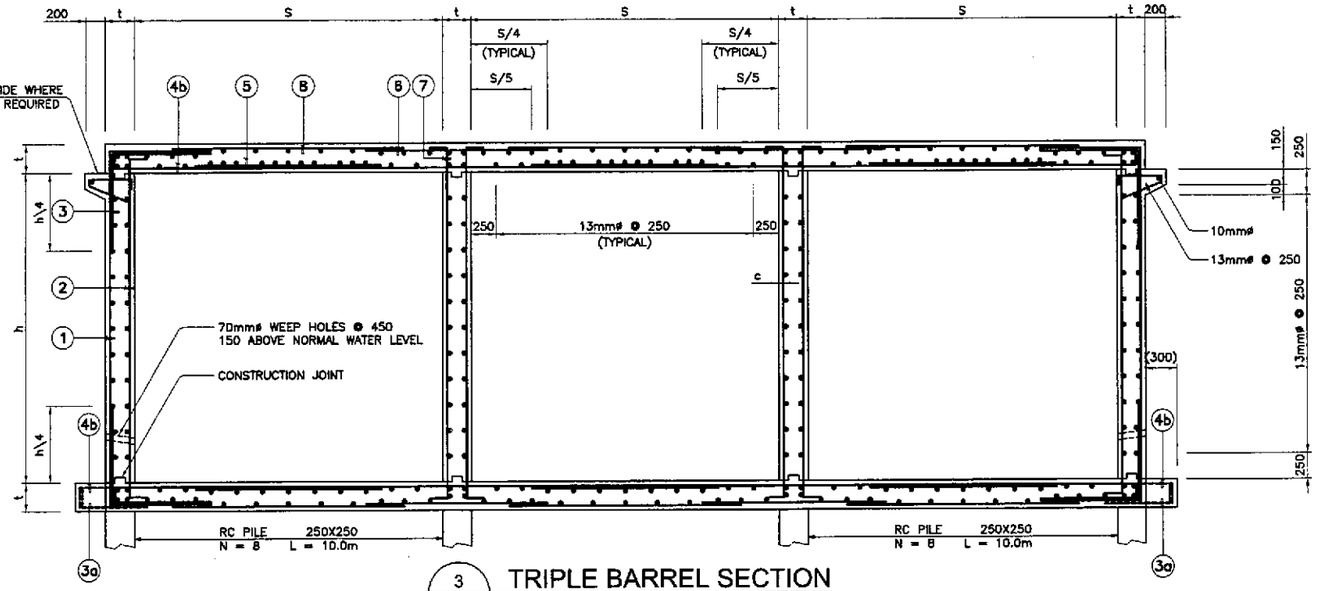

3 DS-02 TRIPLE BARREL SECTION
SCALE 1:30

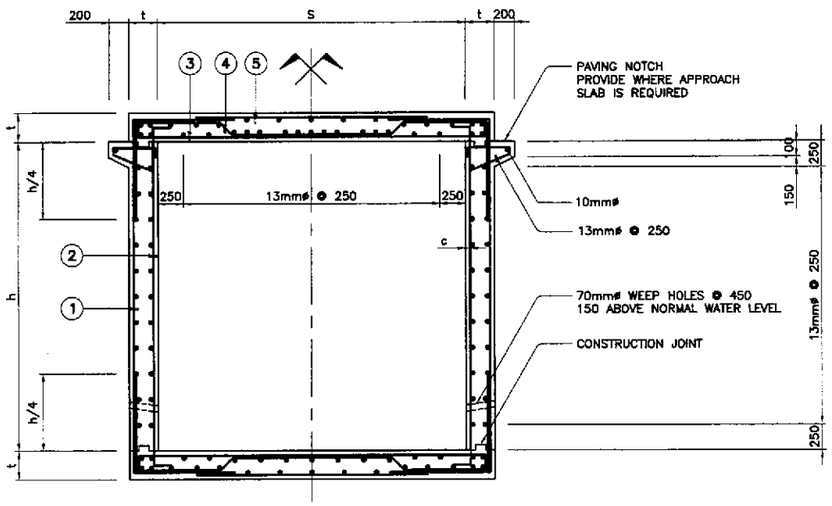

1 DS-02 SINGLE BARREL SECTION
SCALE 1:30

NOTE:

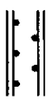

FOR WALL THICKNESS LESS THAN 240, STAGGER HORIZONTAL REINFORCEMENT AS SHOWN.

LEGEND:

c = CONCRETE CLEAR COVER (50mm)

ADDITIONAL REBARS IF FILL IS LESS THAN 600mm

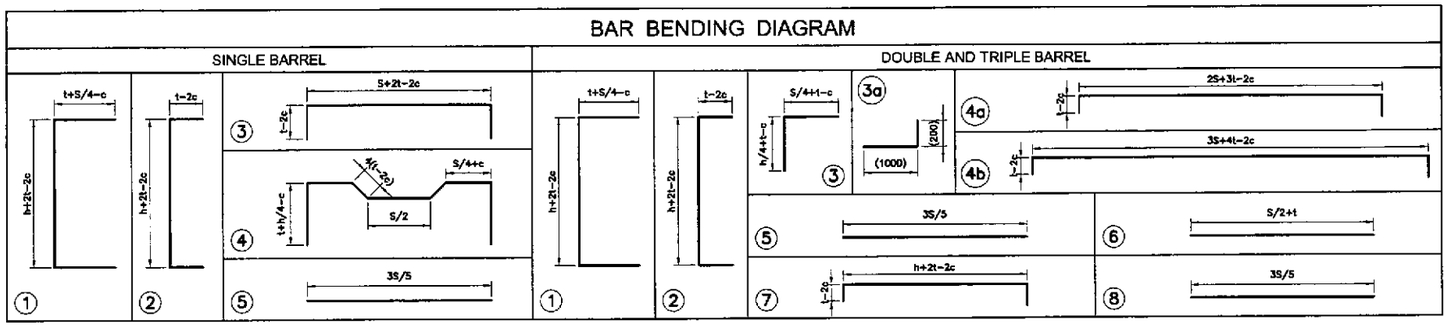

CLEAR		SINGLE BARREL BOX CULVERT												DOUBLE AND TRIPLE BARREL BOX CULVERT															
SPAN S	HEIGHT h	t	BAR 1		BAR 2		BAR 3		BAR 4		BAR 5		t	BAR 1		BAR 2		BAR 3		BAR 4		BAR 5		BAR 6		BAR 7		BAR 8	
			ø	SPACING	ø	SPACING	ø	SPACING	ø	SPACING	ø	SPACING		ø	SPACING	ø	SPACING	ø	SPACING	ø	SPACING	ø	SPACING	ø	SPACING	ø	SPACING	ø	SPACING
1250	1000	180	13	300	13	300	13	300	13	300	13	300	180	13	300	13	300	13	300	13	300	13	300	20	200	13	300	13	300
	1250	180	13	300	13	300	13	300	13	300	13	300	180	13	300	16	300	13	300	13	300	13	300	20	200	13	300	13	300
	1500	180	13	300	13	280	13	300	13	300	13	300	180	13	300	16	280	13	300	13	300	13	300	20	200	13	300	13	300
	1800	180	13	300	13	260	13	300	13	300	13	300	180	13	300	16	260	13	300	13	300	13	300	20	200	13	300	13	300
1500	1000	180	16	240	16	300	16	240	16	240	13	300	200	16	300	16	300	16	300	16	300	16	300	20	200	13	300	13	280
	1250	180	16	240	16	300	16	240	16	240	13	300	200	16	300	16	300	16	300	16	300	16	300	20	200	13	300	13	280
	1500	180	16	240	16	280	16	240	16	240	13	300	200	16	300	16	280	16	300	16	300	16	300	20	200	13	300	13	280
	1800	180	16	240	16	280	16	240	16	240	13	300	200	16	300	16	260	16	300	16	300	16	300	20	200	13	300	13	280
1800	1250	200	16	260	16	300	16	260	16	260	13	280	250	16	300	16	300	16	300	16	300	16	300	20	190	13	300	13	220
	1500	200	16	260	16	300	16	260	16	260	13	280	250	16	300	16	280	16	300	16	300	16	300	20	190	13	300	13	220
	1800	200	16	260	16	280	16	260	16	260	13	280	250	16	300	16	280	16	300	16	300	16	300	20	190	13	300	13	220
	2100	200	16	260	16	260	16	260	16	260	13	280	250	16	300	16	260	16	300	16	300	16	300	20	190	13	300	13	220
2400	1800	220	16	220	16	280	16	220	16	220	13	240	300	16	300	16	280	16	300	16	300	16	300	20	120	13	300	13	200
	2100	220	16	220	16	260	16	220	16	220	13	240	300	16	300	16	280	16	300	16	300	16	300	20	120	13	300	13	200
	2400	220	16	220	16	200	16	220	16	220	13	240	300	16	300	16	280	16	300	16	300	16	300	20	120	13	300	13	200
	2750	220	16	200	16	180	16	200	16	200	13	240	300	16	300	16	280	16	300	16	300	16	300	20	120	13	300	13	200
3000	2100	280	16	260	16	260	16	260	16	260	13	200	300	20	300	16	280	20	300	20	300	20	300	25	170	13	300	13	200
	2400	280	16	260	16	260	16	260	16	260	13	200	300	20	300	16	280	20	300	20	300	20	300	25	170	13	300	13	200
	2750	280	16	200	16	240	16	220	16	200	13	200	300	20	300	16	200	20	300	20	300	20	300	25	170	16	300	13	200
	3000	280	16	200	16	220	16	200	16	200	13	200	300	20	300	16	200	20	300	20	300	20	300	25	170	16	300	13	200
4000	2500												300	20	300	16	200	20	300	20	300	20	300	25	170	16	300	13	200

STANDARD DETAILS OF REINFORCED CONCRETE BOX CULVERT (RCBC) BARRELS

JICA
JAPAN INTERNATIONAL COOPERATION AGENCY
KATAHIRA & ENGINEERS INTERNATIONAL
YACHIYO ENGINEERING CO., LTD.

	DATE	SIGNATURE
DESIGNED	9/16/02	
CHECKED	9/18/02	
SUBMITTED	9/20/02	TEAM LEADER

REPUBLIC OF THE PHILIPPINES
DEPARTMENT OF PUBLIC WORKS AND HIGHWAYS

PJHL – PMO	BUREAU OF DESIGN		OFFICE OF THE SECRETARY	
Submitted By:	Reviewed By:	Recommended By:	Recommended By: (See cover sheet for Signature)	Approved By: (See cover sheet for Signature/Approval)
DANILO C. TRAJANO	JOSEFINA M. ALAGAR	GILBERTO S. REYES	MANUEL M. BONDAN	SIMEON A. DATUMANONG
Project Director	Chief, Highways Division	OIC, Director IV	Undersecretary	Secretary

PROJECT AND LOCATION :
THE DETAILED DESIGN STUDY ON UPGRADING INTER-URBAN HIGHWAY SYSTEM ALONG THE PAN-PHILIPPINE HIGHWAY (Plaridel, Cabanatuan and San Jose Bypasses)
PLARIDEL BYPASS - CONTRACT PACKAGE I

SCALE : 1:30 FULL SIZE A1

SHEET CONTENTS : STANDARD DETAILS OF RCBC BARRELS

SHEET NO. : DS-02

QUANTITIES FOR STANDARD BOX CULVERTS

CLEAR SPAN S	CLEAR HEIGHT h	SINGLE CONCRETE (m3)	SINGLE REINFORCEMENT (kg)	DOUBLE CONCRETE (m3)	DOUBLE REINFORCEMENT (kg)	TRIPLE CONCRETE (m3)	TRIPLE REINFORCEMENT (kg)
1250	1000	0.94	113.32	1.63	209.22	2.33	296.18
	1250	1.03	121.63	1.77	216.22	2.51	312.39
	1500	1.12	130.98	1.90	232.07	2.69	330.39
	1800	1.23	141.71	2.07	249.50	2.91	352.09
1500	1000	1.03	165.90	2.04	253.90	2.92	354.80
	1250	1.12	177.10	2.19	256.00	3.12	370.20
	1500	1.21	189.60	2.34	279.60	3.32	387.10
	1800	1.32	202.50	2.52	296.20	3.56	407.10
1800	1250	1.38	189.20	3.11	312.30	4.45	437.00
	1500	1.48	199.90	3.30	328.10	4.70	454.00
	1800	1.60	214.80	3.53	342.80	5.00	475.20
	2100	1.72	239.60	3.75	357.50	5.30	494.40
2400	1800	2.04	272.70	5.04	431.80	7.20	619.10
	2100	2.17	288.50	5.31	447.30	7.56	637.10
	2400	2.31	314.10	5.58	461.80	7.92	656.40
	2750	2.46	356.70	5.90	478.60	8.34	677.70
3000	2100	3.17	308.70	6.03	635.70	8.64	899.70
	2400	3.34	321.30	6.30	652.00	9.00	919.60
	2750	3.53	374.40	6.62	705.60	9.42	895.00
	3000	3.67	413.50	6.84	721.60	9.72	1015.40
4000	2500	–	–	7.59	825.18	–	–

QUANTITIES FOR STANDARD WINGWALLS

m (meter)	h+t (meter)	L (meter)	SINGLE CONCRETE (m3)	SINGLE REINFORCEMENT (kg)	DOUBLE CONCRETE (m3)	DOUBLE REINFORCEMENT (kg)	TRIPLE CONCRETE (m3)	TRIPLE REINFORCEMENT (kg)
1.37	1.18	1.23	2.41	150	2.94	180	3.48	220
1.75	1.43	1.76	3.48	220	4.08	265	4.72	300
2.12	1.68	2.29	4.66	300	5.36	350	6.06	395
2.57	1.98	2.93	6.22	405	7.01	450	7.80	500
1.37	1.18	1.23	2.50	140	3.26	180	3.88	220
1.75	1.43	1.76	3.69	210	4.42	250	5.16	290
2.12	1.68	2.29	4.78	270	5.73	320	6.56	360
2.57	1.98	2.93	6.35	350	7.42	410	8.37	460
1.78	1.45	1.80	3.81	210	4.98	280	5.90	330
2.15	1.70	2.33	5.03	280	6.33	350	7.36	400
2.60	2.00	2.97	6.48	360	8.09	450	9.26	510
3.05	2.30	3.61	8.37	460	10.00	550	11.31	620
2.63	2.02	3.01	7.08	390	9.14	500	10.71	590
3.08	2.32	3.65	9.28	510	11.61	640	13.37	740
3.53	2.62	4.28	11.42	630	13.98	770	15.92	880
4.06	2.97	5.03	14.17	780	17.90	990	19.15	1050
3.17	2.38	3.78	10.08	560	12.38	680	14.53	800
3.62	2.68	4.41	12.30	680	14.83	820	17.19	940
4.15	3.03	5.15	15.15	840	17.94	990	20.57	1130
4.52	3.28	5.68	17.34	960	20.33	1120	23.15	1270
3.80	2.80	4.67	–	–	17.01	671	–	–

GENERAL NOTES :

SPECIFICATION :

AASHTO STANDARD SPECIFICATION FOR HIGHWAY BRIDGES, 16th EDITION 1996.

DESIGN LOAD :

LIVE LOAD MS-18 (HS 20-44)

CONCRETE :

ALL CONCRETE SHALL HAVE A MINIMUM COMPRESSION STRENGTH IN 28 DAYS OF f'c = 20.7 MPa (3000psi). ALL EXPOSED CORNERS TO BE CHAMFERED 20 MINIMUM. NO CONSTRUCTION JOINT ARE TO BE MADE EXCEPT WHERE SHOWN. WHEN BOTTOM SLAB IS SUBJECT TO ABRASION ADD 25mm TO BOTTOM SLAB TO INCREASE COVERAGE ON STEEL.

STEEL REINFORCEMENT :

ALL REINFORCING STEEL TO BE INTERMEDIATE (GRADE 40) ASTM A-615 WITH DEFORMATIONS CONFORMING TO ASTM A-305.

GENERAL :

IN STATING CULVERT SIZE, GIVE SPAN BY HEIGHT (SPAN FIRST) WHEN HEIGHT OF FILL, H=0 THE TOP OF SURFACE OF THE UPPER SLAB SHALL FOLLOW THE CROWN OF THE FINISHED ROADWAY. THE BOX CULVERT SHALL BE CONSTRUCTED ON A LAYER OF LEAN CONCRETE 50mm MINIMUM THICKNESS.

LIVE LOAD DISTRIBUTION REINFORCEMENT :

WHEN THERE IS LESS THAN 600mm OF FILL ABOVE TOP SLAB OF CULVERT ADDITIONAL REINFORCEMENT TRANSVERSE TO THE MAIN REINFORCEMENT IS ADDED TO THE BOTTOM OF THE TOP SLAB IN ACCORDANCE WITH AASHTO 1.3.2.E.

HEIGHT OF FILL :

MAXIMUM HEIGHT OF FILL IS 3000mm ABOVE TOP SLAB, FOR HEIGHT OF FILL GREATER THAN 3000mm SPECIAL DESIGN OF BOX CULVERT SHOULD BE DONE.

HORIZONTAL SKEW ANGLE ∝	LENGTH OF WINGWALLS
90°	L1 = L2 = 1.414a
60°	L1 = 1.414a L2 = 1.035a
45°	L1 = 2.000a L2 = a

WHERE :

a = 1.5 (h+t-600) FOR SLOPE 1.5:1

a = 2.0 (h+t-600) FOR SLOPE 2:1

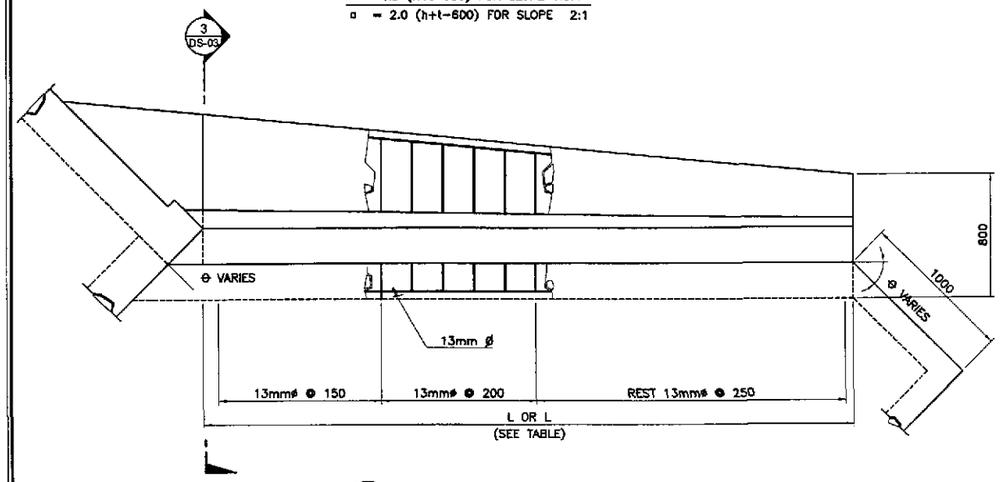

1 DS-03 WINGWALL PLAN
SCALE 1:40

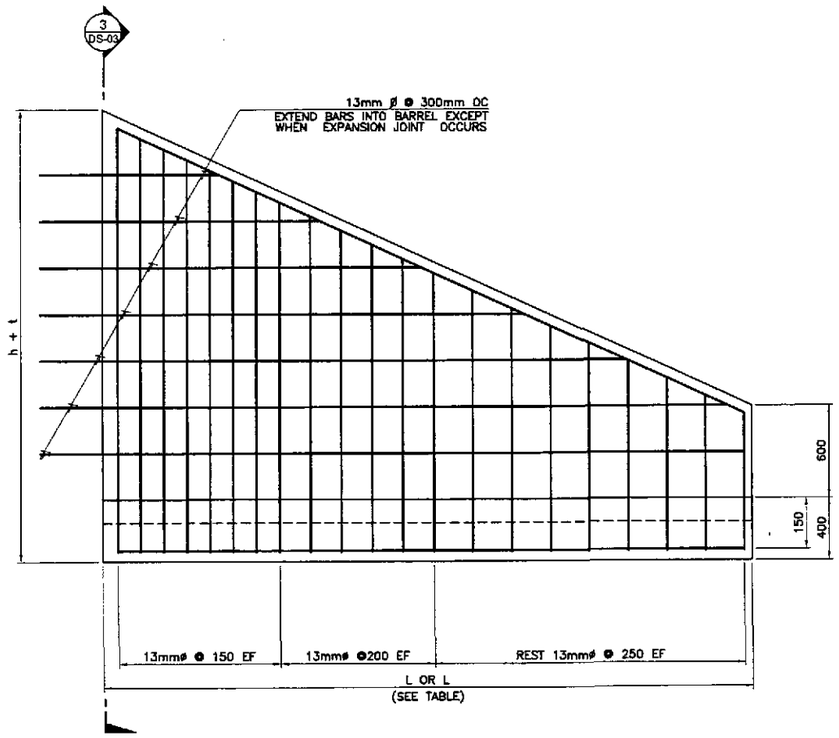

2 DS-03 WINGWALL ELEVATION
SCALE 1:40

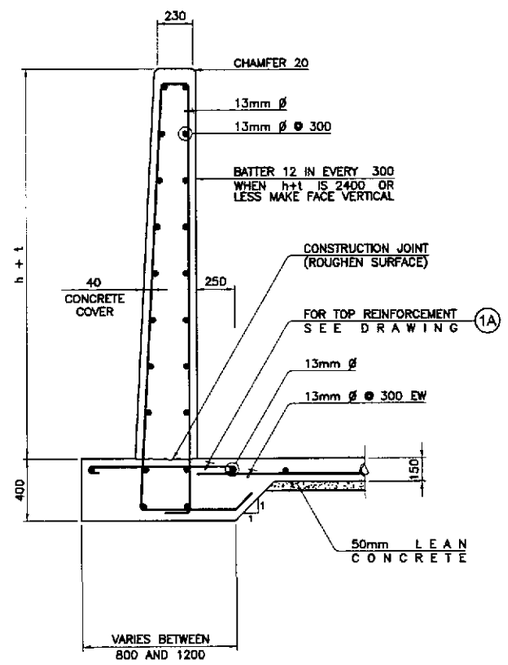

3 DS-03 SECTION
SCALE 1:40

RCBC WINGWALL DETAILS

JICA
JAPAN INTERNATIONAL COOPERATION AGENCY
KEI KATAHIRA & ENGINEERS INTERNATIONAL
YEC YACHIYO ENGINEERING CO., LTD.

	DATE	SIGNATURE
DESIGNED	9/16/02	F. SOLIDARIA
CHECKED	9/18/02	H. KATAYAMA
SUBMITTED	9/20/02	M. KUSUNOKI TEAM LEADER

REPUBLIC OF THE PHILIPPINES
DEPARTMENT OF PUBLIC WORKS AND HIGHWAYS

PJHL - PMO	BUREAU OF DESIGN		OFFICE OF THE SECRETARY	
Submitted By:	Reviewed By:	Recommended By:	Recommended By: (See cover sheet for Signature)	Approved By: (See cover sheet for Signature/Approval)
DANILO C. TRAJANO	JOSEFINA M. ALAGAR	GILBERTO S. REYES	MANUEL M. BONOAN	SIMEON A. DATUMANONG
Project Director	Chief, Highways Division	OIC, Director IV	Undersecretary	Secretary

PROJECT AND LOCATION :
THE DETAILED DESIGN STUDY ON UPGRADING INTER-URBAN HIGHWAY SYSTEM ALONG THE PAN-PHILIPPINE HIGHWAY (Plaridel, Cabanatuan and San Jose Bypasses)
PLARIDEL BYPASS - CONTRACT PACKAGE I

SCALE : 1:40 FULL SIZE A1

SHEET CONTENTS : STANDARD DETAILS OF RCBC WINGWALLS

SHEET NO. : DS-03

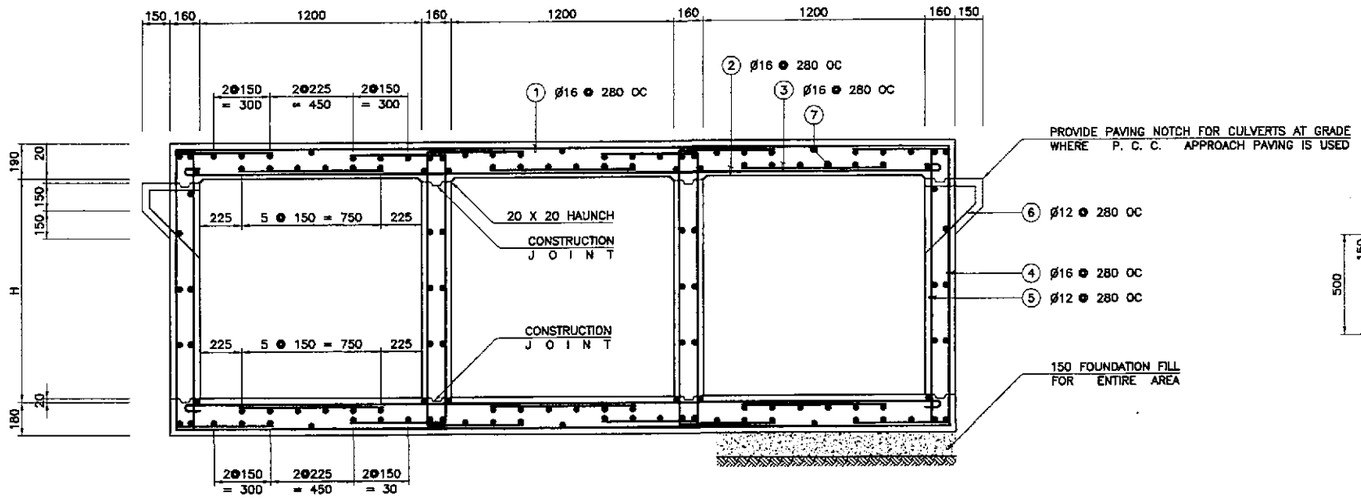

1A / DS-04 SECTION ALONG ℄ OF ROADWAY
NOT TO SCALE

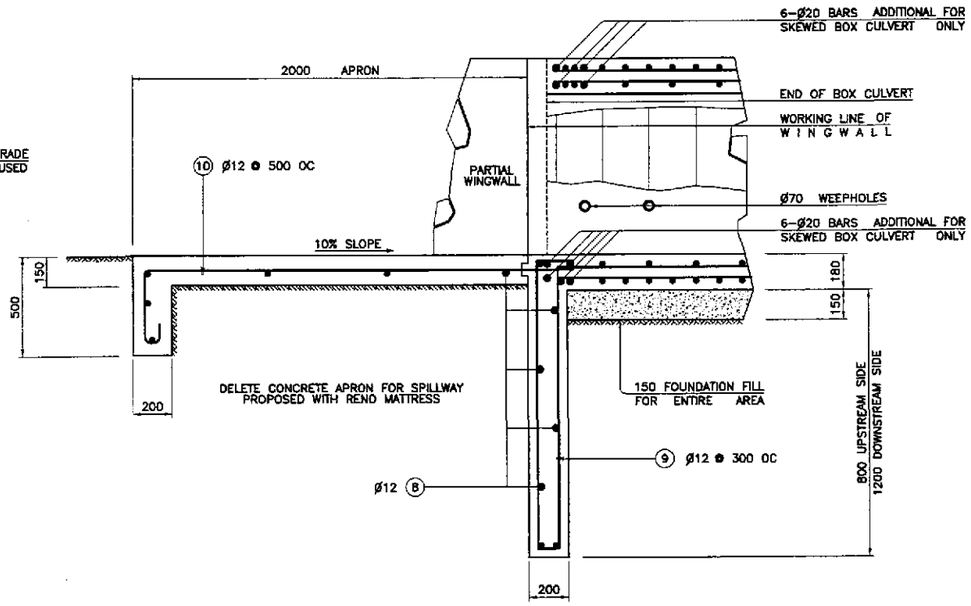

1B / DS-04 PARTIAL SECTION A
NOT TO SCALE

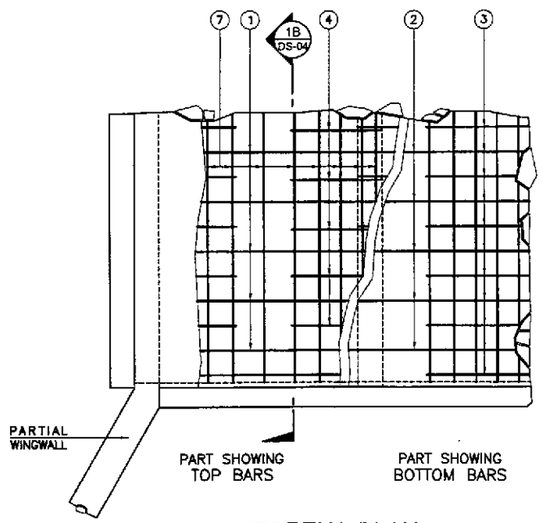

PARTIAL PLAN
NOT TO SCALE

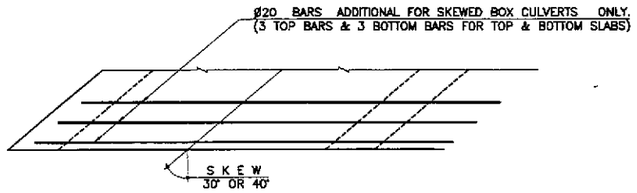

NOTE:
ALL OTHER REINFORCING BARS SHALL BE PERPENDICULAR OR PARALLEL, AS THE CASE MAYBE, TO BOX AXIS.

BAR BENDING DIAGRAM

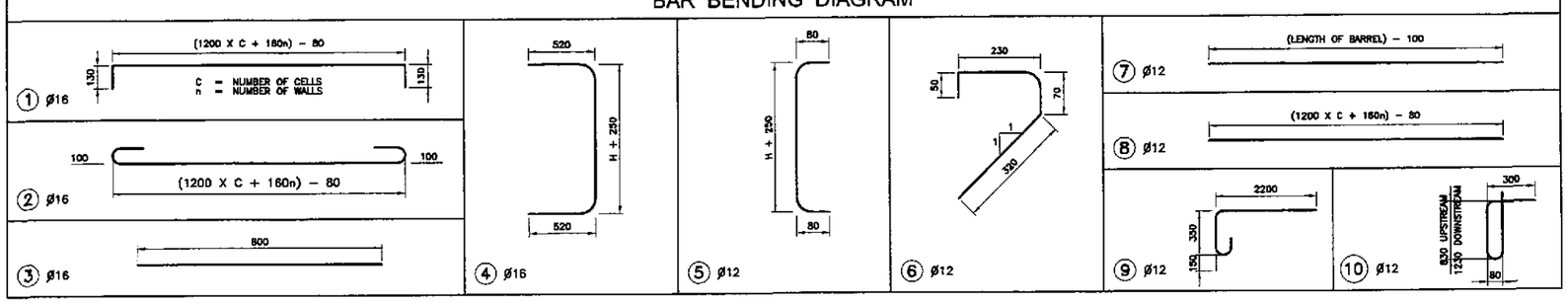

ESTIMATE OF QUANTITIES (PER LINEAR METER OF LENGTH)

	SINGLE BARREL				DOUBLE BARREL				TRIPLE BARREL			
HEIGHT OF CELL "H" (METER)	CONCRETE CLASS "A" (m^3)	REINFORCING STEEL (kg)	EXCAVATION (m^3)	FOUNDATION FILL (m^3)	CONCRETE CLASS "A" (m^3)	REINFORCING STEEL (kg)	EXCAVATION (m^3)	FOUNDATION FILL (m^3)	CONCRETE CLASS "A" (m^3)	REINFORCING STEEL (kg)	EXCAVATION (m^3)	FOUNDATION FILL (m^3)
1.20	0.95	132.59	0.67	0.27	1.64	217.00	1.12	0.48	2.34	299.62	1.56	0.68
0.90	0.85	127.30	0.67	0.27	1.50	209.08	1.12	0.48	2.14	289.04	1.56	0.68
0.60	0.75	122.01	0.67	0.27	1.35	201.15	1.12	0.48	1.95	278.48	1.56	0.68

ADDITIONAL WEIGHT OF REINFORCEMENT PER END OF BOX CULVERT
30° SKEW = 98.5 kgs. 30° SKEW = 46.5 kgs.
45° SKEW = 120.5 kgs. 45° SKEW = 57.0 kgs.

APRON AND END TOE FOR BOTH ENDS

	SINGLE BARREL			DOUBLE BARREL			TRIPLE BARREL		
COMMON TO ALL HEIGHT OF CELL	CONCRETE CLASS "A" (m^3)	REINFORCING STEEL (kg)	EXCAVATION (m^3)	CONCRETE CLASS "A" (m^3)	REINFORCING STEEL (kg)	EXCAVATION (m^3)	CONCRETE CLASS "A" (m^3)	REINFORCING STEEL (kg)	EXCAVATION (m^3)
	1.73	57.94	3.64	3.28	111.34	6.08	4.83	164.70	8.53

1 / DS-04 LOW DEPTH TYPE BOX CULVERT
NOT TO SCALE

JICA
JAPAN INTERNATIONAL COOPERATION AGENCY
KEI KATAHIRA & ENGINEERS INTERNATIONAL
YEC YACHIYO ENGINEERING CO., LTD.

	DATE	SIGNATURE
DESIGNED	9/16/02	
CHECKED	9/18/02	
SUBMITTED	9/20/02	TEAM LEADER

REPUBLIC OF THE PHILIPPINES
DEPARTMENT OF PUBLIC WORKS AND HIGHWAYS

PJHL – PMO	BUREAU OF DESIGN		OFFICE OF THE SECRETARY	
Submitted By:	Reviewed By:	Recommended By:	Recommended By: (See cover sheet for Signature)	Approved By: (See cover sheet for Signature/Approval)
DANILO C. TRAJANO	JOSEFINA M. ALAGAR	GILBERTO S. REYES	MANUEL M. BONOAN	SIMEON A. DATUMANONG
Project Director	Chief, Highways Division	OIC, Director IV	Undersecretary	Secretary

PROJECT AND LOCATION :
THE DETAILED DESIGN STUDY ON UPGRADING INTER-URBAN HIGHWAY SYSTEM ALONG THE PAN-PHILIPPINE HIGHWAY (Plaridel, Cabanatuan and San Jose Bypasses)
PLARIDEL BYPASS - CONTRACT PACKAGE I

SCALE : NOT TO SCALE
FULL SIZE A1

SHEET CONTENTS :
STANDARD LOW DEPTH TYPE BOX CULVERT
(1 of 2)

SHEET NO. : DS-04

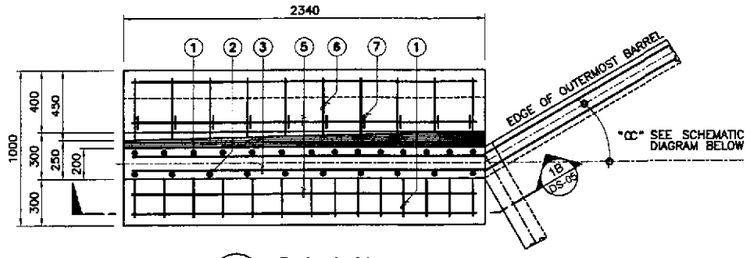

1A DS-05 PLAN SCALE 1:40

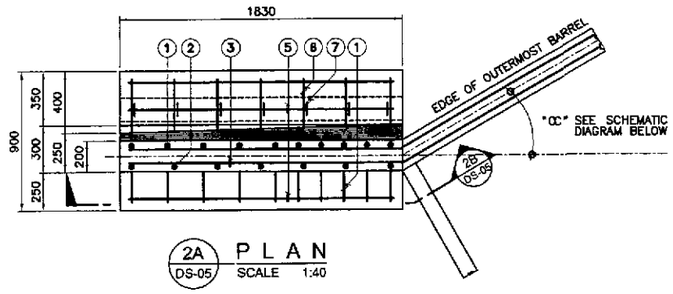

2A DS-05 PLAN SCALE 1:40

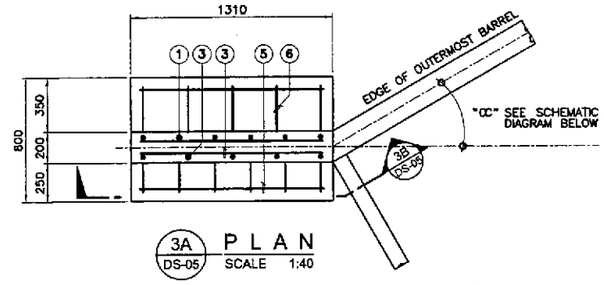

3A DS-05 PLAN SCALE 1:40

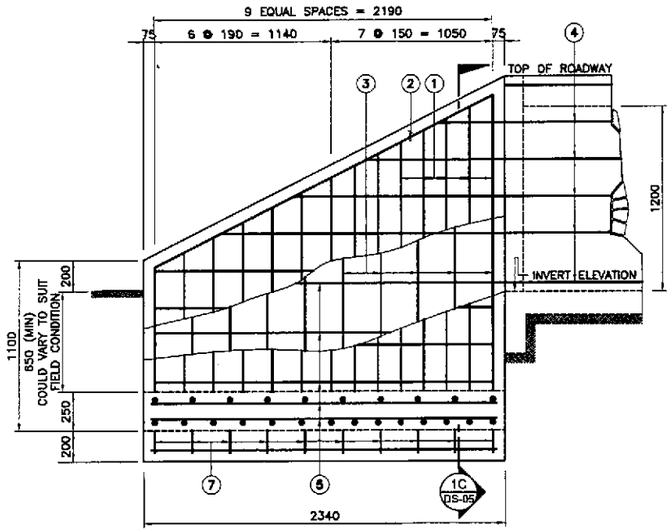

1A DS-05 ELEVATION SCALE 1:40

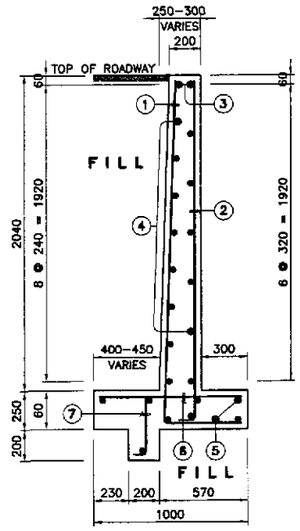

1C DS-05 SECTION SCALE 1:40

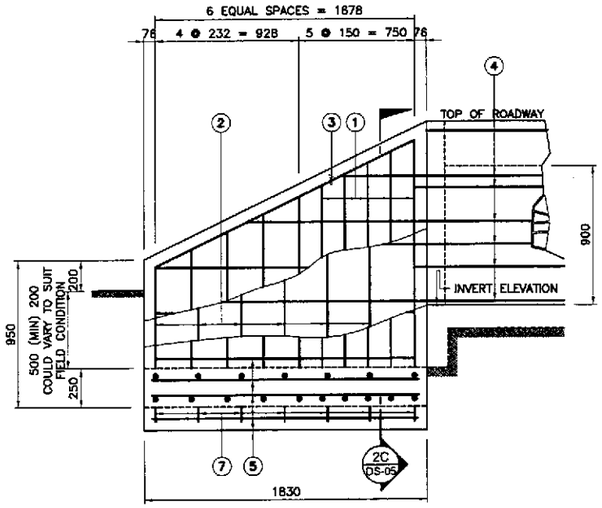

2B DS-05 ELEVATION SCALE 1:40

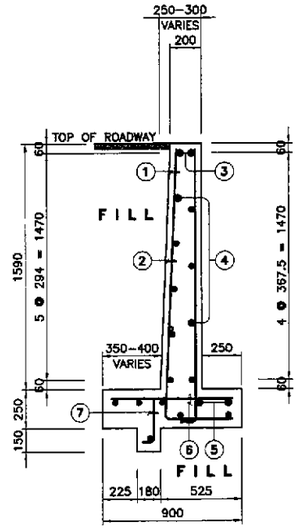

2C DS-05 SECTION SCALE 1:40

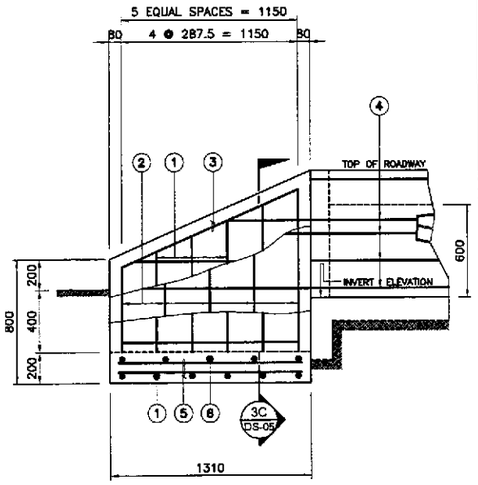

3B DS-05 ELEVATION SCALE 1:40

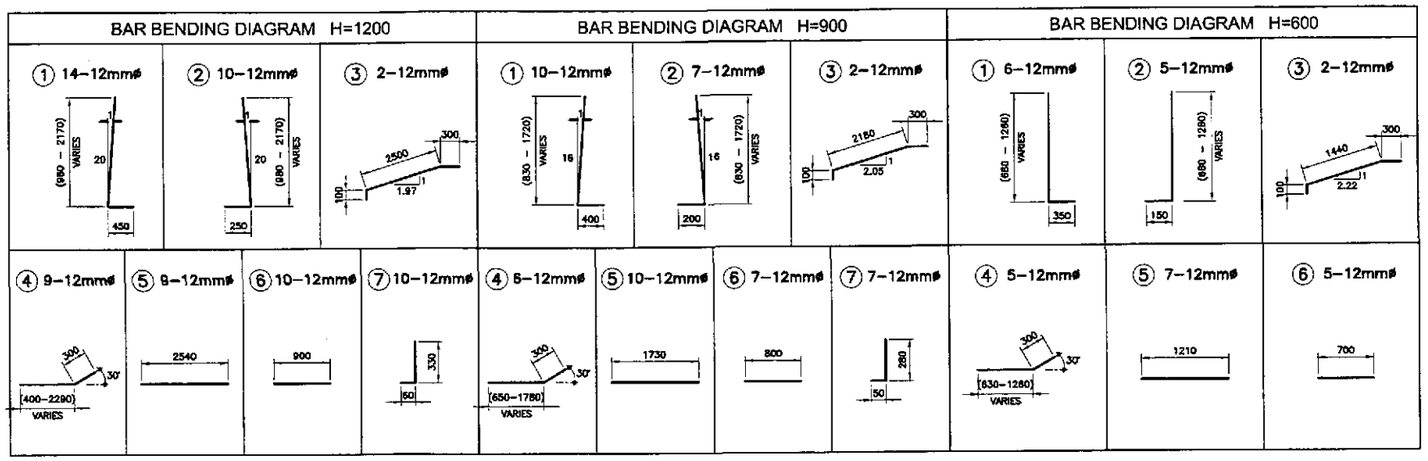

ESTIMATE OF QUANTITIES PER WINGWALL				
HEIGHT (m)	CONCRETE CLASS "A" (m^3)	REINFORCEMENT (kg)	EXCAVATION (m^3)	FOUNDATION FILL (m^3)
1.20	2.96	102.89	5.78	0.30
0.90	1.90	57.68	3.53	0.22
0.60	0.88	31.43	1.97	0.15

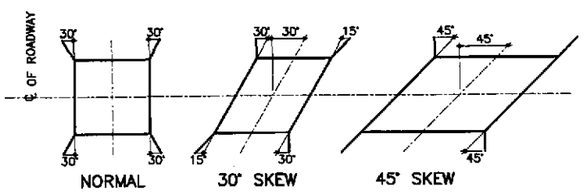

4 DS-05 SCHEMATIC DIAGRAM SHOWING FLARE OF WINGWALL NOT TO SCALE

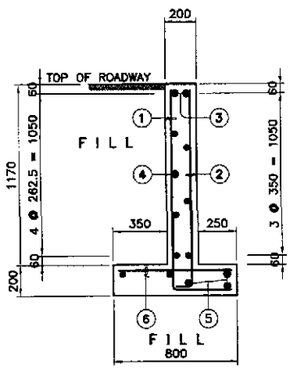

3C DS-05 SECTION SCALE 1:40

LOW DEPTH TYPE BOX CULVERT

JICA
JAPAN INTERNATIONAL COOPERATION AGENCY
KEI KATAHIRA & ENGINEERS INTERNATIONAL
YEC YACHIYO ENGINEERING CO., LTD.

	DATE	SIGNATURE
DESIGNED	9/16/02	F. STA. MARIA
CHECKED	9/18/02	
SUBMITTED	9/20/02	TEAM LEADER

REPUBLIC OF THE PHILIPPINES
DEPARTMENT OF PUBLIC WORKS AND HIGHWAYS

PUHL – PMO	BUREAU OF DESIGN		OFFICE OF THE SECRETARY	
Submitted By:	Reviewed By:	Recommended By:	Recommended By: (See cover sheet for Signature)	Approved By: (See cover sheet for Signature/Approval)
DANILO C. TRAJANO	JOSEFINA M. ALAGAR	GILBERTO S. REYES	MANUEL M. BONOAN	SIMEON A. DATUMANONG
Project Director	Chief, Highways Division	DIC, Director IV	Undersecretary	Secretary

PROJECT AND LOCATION :	SCALE :	SHEET CONTENTS :	SHEET NO. :
THE DETAILED DESIGN STUDY ON UPGRADING INTER-URBAN HIGHWAY SYSTEM ALONG THE PAN-PHILIPPINE HIGHWAY (Plaridel, Cabanatuan and San Jose Bypasses)	AS SHOWN	STANDARD LOW DEPTH TYPE BOX CULVERT (2 of 2)	DS-05
PLARIDEL BYPASS - CONTRACT PACKAGE I	FULL SIZE A1		

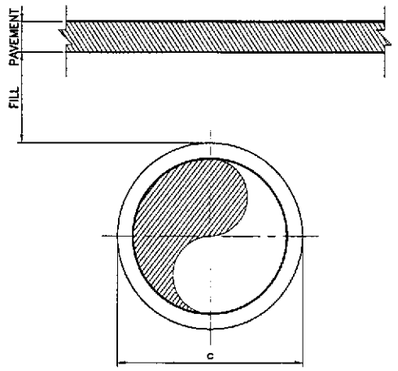

STANDARD STRENGTH PIPES:
FILL 1/2 E.D. FOR FLEXIBLE PAVEMENT OR MIN. OF 0.60 m
0.30 m FOR RIGID PAVEMENT
EXTRA STRENGTH PIPES:
FILL: 0.30 m FOR RIGID AND FLEXIBLE PAVEMENTS

MINIMUM PIPE COVERING

DESIGN REQUIREMENT OF REINFORCED CONCRETE PIPE CULVERT

SIZE OF PIPE (mm)	STANDARD STRENGTH REINFORCED CONCRETE PIPE CULVERTS — CONCRETE 247 kg/cm² (3,500 lb/in²)								CONCRETE 317 kg/cm² (4,500 lb/in²)								STRENGTH TEST REQUIREMENTS kg/m OF PIPE		EXTRA STRENGTH REINFORCED CONCRETE PIPE CULVERTS — CONCRETE 317 kg/cm² (4,500 lb/in²)								STRENGTH TEST REQUIREMENTS kg/m OF PIPE	
	WALL THICKNESS (mm)	TONGUE (mm)		GROOVE (mm)		DEPTH (mm)	MINIMUM REINFORCEMENT cm²/m OF PIPE		WALL THICKNESS (mm)	TONGUE (mm)		GROOVE (mm)		DEPTH (mm)	MINIMUM REINFORCEMENT cm²/m OF PIPE ⊛		THREE-EDGE-BEARING METHOD ✳		WALL THICKNESS (mm)	TONGUE (mm)		GROOVE (mm)		DEPTH (mm)	MINIMUM REINFORCEMENT cm²/m OF PIPE ○		THREE-EDGE-BEARING METHOD	
I.D.	t	A	B	C	E	P	CIRCULAR REINFORCEMENT	ELLIPTICAL REINFORCEMENT	t	A	B	C	E	P	CIRCULAR REINFORCEMENT	ELLIPTICAL REINFORCEMENT	0.00025mCRACK LOAD	ULTIMATE LOAD	t	A	B	C	E	P	CIRCULAR REINFORCEMENT	ELLIPTICAL REINFORCEMENT	0.00025mCRACK LOAD	LOAD ULTIMATE
300	57	344	363	351	370	44	1 LINE 1.48		51	495	514	502	521	44	1 LINE 1.69		3.355	5.218	—	—	—	—	—					
380	57	344	363	351	370	44	1 LINE 1.90		51	495	514	502	521	44	1 LINE 2.33		3.914	6.060	—	—	—	—	—					
460	64	508	527	514	534	44	1 LINE 2.54	1 LINE 2.12	51	495	514	502	521	44	1 LINE 2.96		4.473	6.709	—	—	—	—	—					
610	76	673	692	680	699	44	1 LINE 3.60	1 LINE 2.75	64	660	680	667	686	44	1 LINE 4.23	1 LINE 3.60	4.473	7.454	76	673	692	680	699	44	1 LINE 5.50	1 LINE 4.23	5.964	8.945
760	89	858	857	845	864	51	1 LINE 4.66	1 LINE 3.60	76	825	845	832	851	51	1 LINE 5.92	1 LINE 4.44	5.032	8.573	89	838	857	845	864	51	1 LINE 6.56	1 LINE 5.08	7.454	11.182
910	102	1003	1022	1010	1029	64	2 LINES EACH 3.81	1 LINE 3.81	86	988	1007	994	1013	64	2 LINES EACH 4.66	1 LINE 4.66	6.038	9.840	102	1003	1022	1010	1029	64	2 LINES EACH 5.92	1 LINE 5.92	8.945	13.418
1070	114	1168	1187	1175	1194	64	2 LINES EACH 4.44	1 LINE 4.44	95	1150	1185	1156	1175	64	2 LINES EACH 5.29	1 LINE 5.29	7.045	10.958	114	1168	1187	1175	1194	64	2 LINES EACH 6.98	1 LINE 6.98	10.436	15.655
1220	127	1334	1353	1340	1359	64	2 LINES EACH 5.29	1 LINE 5.29	108	1315	1334	1321	1340	64	2 LINES EACH 6.56	1 LINE 6.56	8.051	11.927	127	1334	1353	1340	1359	64	2 LINES EACH 8.04	1 LINE 8.04	11.927	17.891
1520	152	1664	1683	1670	1690	64	2 LINES EACH 6.98	1 LINE 6.98	127	1639	1658	1645	1664	64	2 LINES EACH 8.68	1 LINE 8.68	8.945	14.909	152	1664	1683	1670	1690	64	2 LINES EACH 10.58	1 LINE 10.58	13.418	22.364

⊛ THE DISTANCE FROM CENTERLINE OF THE REINFORCEMENT TO THE NEAREST SURFACE OF THE CONCRETE HAS BEEN ASSUMED AS 32mm FOR PIPES WITH A SHELL THICKNESS OF 64mm OR MORE.
✳ TEST LOADS FOR SAND-BEARING TEST SHALL BE ONE AND ONE – HALF TIMES THOSE SPECIFIED IN THIS TABLE FOR THE THREE – EDGE BEARING TEST.

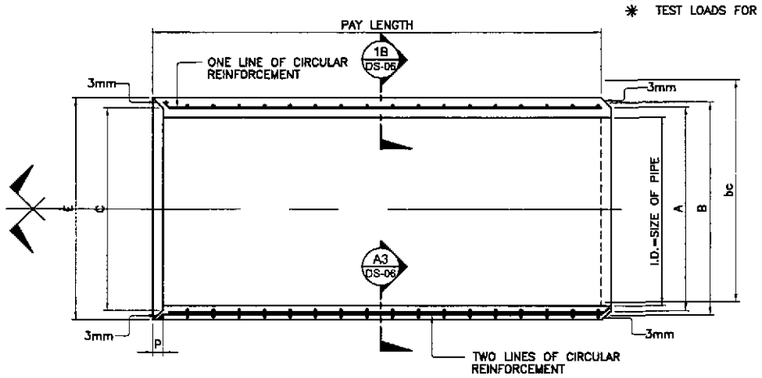

1A DS-06 LONGITUDINAL SECTION NOT TO SCALE

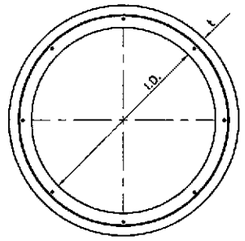

ONE LINE OF CIRCULAR REINFORCEMENT

1B DS-06 SECTION

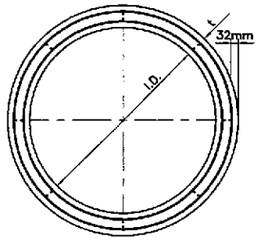

TWO LINES OF CIRCULAR REINFORCEMENT

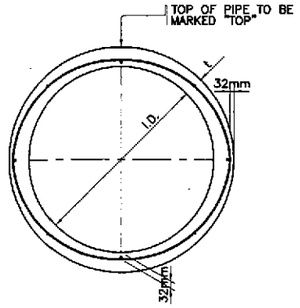

ONE LINE OF ELLIPTICAL REINFORCEMENT

1C DS-06 SECTION

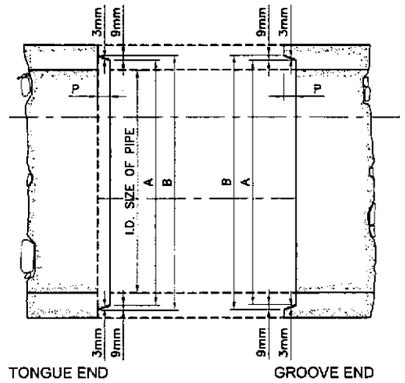

TONGUE END GROOVE END

1D DS-06 SECTION

1 DS-06 STANDARD REINFORCED CONCRETE PIPE CULVERTS SCALE AS SHOWN

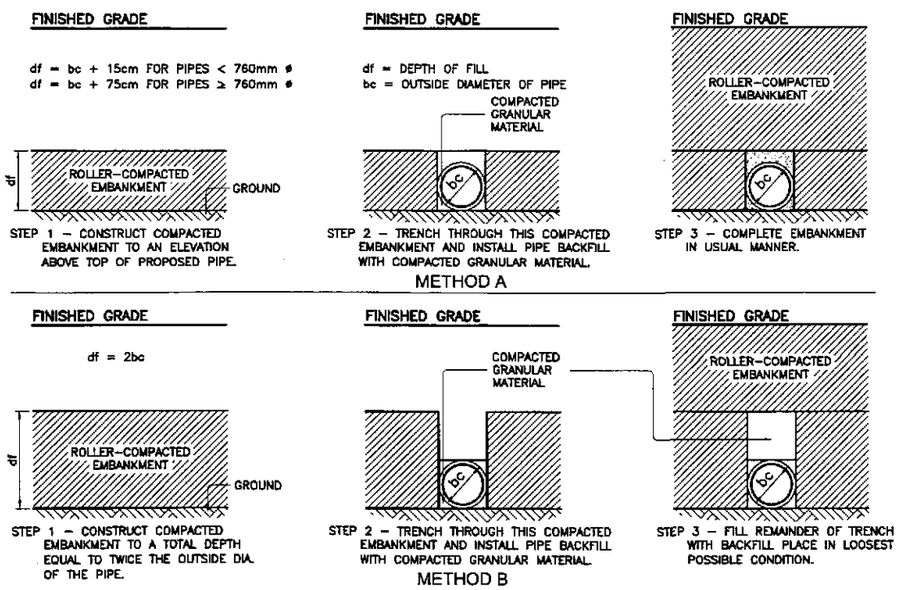

2 DS-06 METHODS OF PIPE INSTALLATION NOT TO SCALE

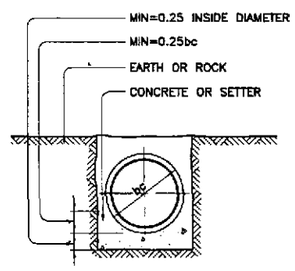

CONCRETE CRADLE BEDDING

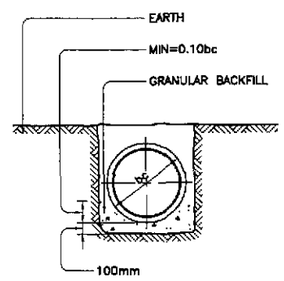

ORDINARY BEDDINGS

3 DS-06 TYPICAL BEDDING FOR CONDUITS NOT TO SCALE

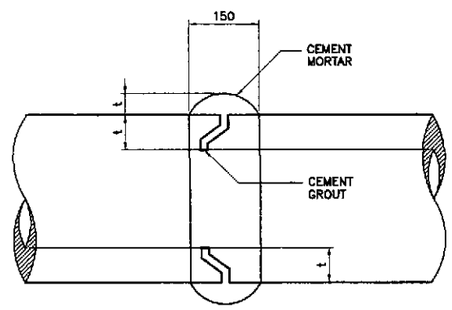

4 DS-06 DETAIL OF PIPE COLLAR NOT TO SCALE

JICA
JAPAN INTERNATIONAL COOPERATION AGENCY
KEI KATAHIRA & ENGINEERS INTERNATIONAL
YEC YACHIYO ENGINEERING CO., LTD.

	DATE	SIGNATURE
DESIGNED	9/16/02	F. STA. MARIA
CHECKED	9/18/02	
SUBMITTED	9/20/02	TEAM LEADER

REPUBLIC OF THE PHILIPPINES
DEPARTMENT OF PUBLIC WORKS AND HIGHWAYS

PJHL – PMO	BUREAU OF DESIGN		OFFICE OF THE SECRETARY	
Submitted By:	Reviewed By:	Recommended By:	Recommended By: (See cover sheet for Signature)	Approved By: (See cover sheet for Signature/Approval)
DANILO C. TRAJANO	JOSEFINA M. ALAGAR	GILBERTO S. REYES	MANUEL M. BONDAN	SIMEON A. DATUMANONG
Project Director	Chief, Highways Division	OIC, Director IV	Undersecretary	Secretary

PROJECT AND LOCATION :
THE DETAILED DESIGN STUDY ON UPGRADING INTER-URBAN HIGHWAY SYSTEM ALONG THE PAN-PHILIPPINE HIGHWAY (Plaridel, Cabanatuan and San Jose Bypasses)
PLARIDEL BYPASS - CONTRACT PACKAGE I

SCALE : AS SHOWN FULL SIZE A1

SHEET CONTENTS :
STANDARD RCPC, METHOD OF PIPE INSTALLATION AND TYPICAL BEDDING FOR CONDUITS

SHEET NO. : DS-06

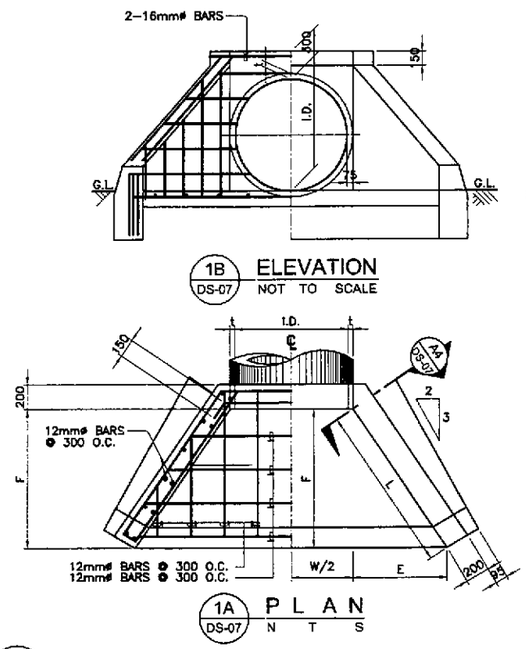

1B DS-07 ELEVATION NOT TO SCALE

1A DS-07 PLAN N T S

1 DS-07 FLARED TYPE HEADWALL (SINGLE PIPE) SCALE AS SHOWN

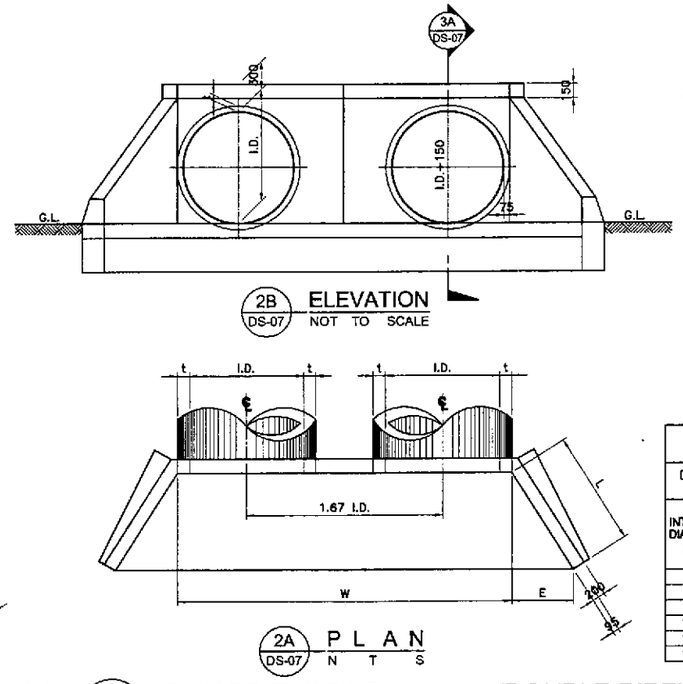

2B DS-07 ELEVATION NOT TO SCALE

2A DS-07 PLAN N T S

2 DS-07 FLARED TYPE HEADWALL (DOUBLE PIPE) SCALE AS SHOWN

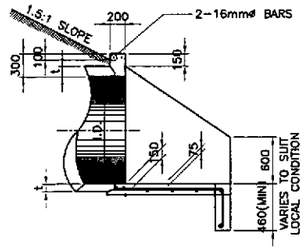

3A DS-07 SECTION NOT TO SCALE

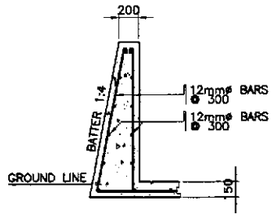

3B DS-07 SECTION NOT TO SCALE

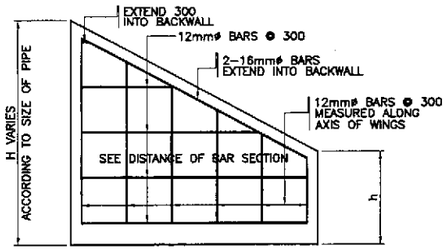

3C DS-07 SECTION NOT TO SCALE

TABLE A (ONE FLARED TYPE HEADWALL 1.5:1)

DIAMETER & THICKNESS (mm)		DIMENSIONS (mm)				SINGLE PIPE				DOUBLE PIPE				TRIPLE PIPE			
INTERNAL DIAMETER (I.D.)	MIN. THICKNESS SHELL (t)	L	E	F	h	AREA OF WATERWAY m^2	W (mm)	EST. OF QUANTITIES CONC. m^3	EST. OF QUANTITIES REINF. STEEL kg.	AREA OF WATERWAY m^2	W (mm)	EST. OF QUANTITIES CONC. m^3	EST. OF QUANTITIES REINF. STEEL kg.	AREA OF WATERWAY m^2	W (mm)	EST. OF QUANTITIES CONC. m^3	EST. OF QUANTITIES REINF. STEEL kg.
460	51	710	390	590	0	0.17	610	0.57	25.65	0.32	1380	0.83	37.35	0.51	2150	1.27	57.15
610	64	960	530	800	0	0.29	760	0.82	36.46	0.58	1780	1.16	48.39	0.87	2800	1.75	78.75
910	86	1510	840	1260	600	0.65	1070	1.55	68.92	1.30	2590	2.22	92.61	1.95	4100	3.36	150.98
1070	95	1770	980	1470	600	0.90	1230	2.38	107.10	1.80	3020	3.05	137.25	2.70	4800	3.96	178.20
1220	108	2040	1130	1690	600	1.17	1370	2.66	110.27	2.34	3400	3.71	154.77	3.51	5360	5.36	241.34
1520	127	2540	1410	2110	600	1.81	1680	3.93	174.74	3.63	4229	5.47	228.18	5.43	6760	6.76	304.20

TABLE C (ONE L-TYPE HEADWALL)

DIA. & THICKNESS (mm)		DIMENSIONS (mm)						SINGLE PIPE	
INTERNAL DIAMETER (I.D.)	MIN. THK. SHELL (t)	A	B	B'	H	W	L	CONCRETE m^3 mm	REINF. STEEL kg.
460	51	310	350	200	1070	1070	1070	0.66	6
610	64	410	430	200	1320	1220	1220	1.06	8
910	86	610	610	200	1820	1820	1820	2.76	11
1070	95	710	780	300	2080	1970	VARIES	–	–
1220	108	810	870	300	2330	2120	VARIES	–	–
1520	127	1010	980	300	3030	2420	VARIES	–	–

TABLE C (ONE STRAIGHT TYPE HEADWALL)

DIAMETER & THICKNESS (mm)		DIMENSIONS (mm)			SINGLE PIPE				DOUBLE PIPE				TRIPLE PIPE			
INTERNAL DIAMETER (I.D.)	MIN. THK. SHELL (t)	A	B	H	W (mm)	AREA OF WATERWAY m^2	CONCRETE m^3 mm	REINF. STEEL kg.	W (mm)	AREA OF WATERWAY m^2	CONCRETE m^3 mm	REINF. STEEL kg.	W (mm)	AREA OF WATERWAY m^2	CONCRETE m^3 mm	REINF. STEEL kg.
460	51	310	350	1070	1500	0.15	0.46	3.48	2600	0.33	0.63	4.90	3400	0.45	0.80	5.97
610	64	410	430	1320	2400	0.29	0.87	4.55	3500	0.58	1.20	6.50	4600	0.87	1.51	8.45
910	86	610	600	1820	3800	0.65	2.28	6.68	5200	1.30	3.16	9.52	6800	1.95	3.85	12.36
1070	95	710	780	2080	4300	0.90	3.84	7.57	6050	1.80	5.09	10.67	7900	2.70	6.43	13.96
1220	108	810	870	2330	4800	1.17	4.43	8.81	6900	2.34	6.70	12.54	9000	3.51	7.97	16.14
1520	127	1010	980	2830	6000	1.81	8.80	10.94	8600	3.63	11.93	15.56	11200	5.43	15.05	19.82

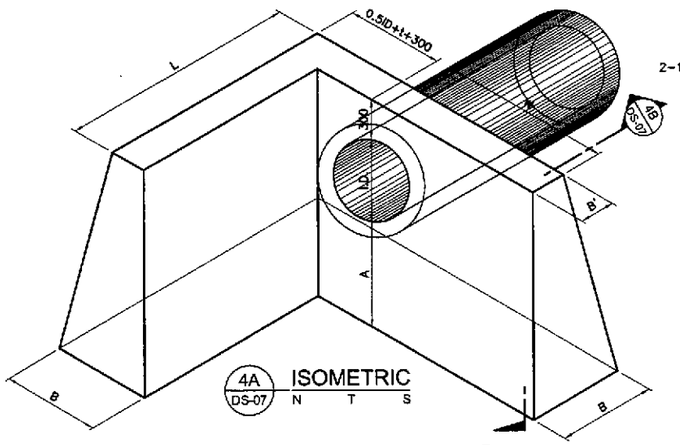

4A DS-07 ISOMETRIC N T S

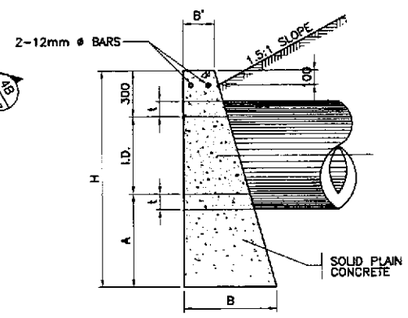

4B DS-07 SECTION NOT TO SCALE

4 DS-07 L-TYPE HEADWALL NOT AS SHOWN

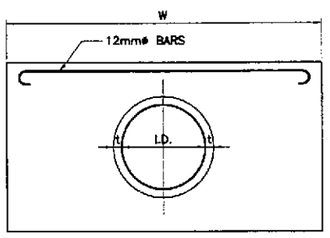

5A DS-07 SINGLE PIPE NOT TO SCALE

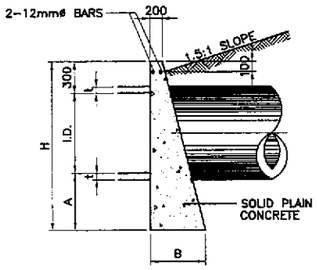

5B DS-07 SECTION NOT TO SCALE

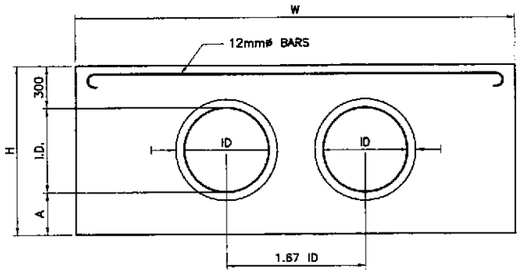

5C DS-07 DOUBLE PIPE NOT TO SCALE 1–2/3 I.D.

5 DS-07 STRAIGHT TYPE HEADWALL NOT AS SHOWN

STANDARD REINFORCED CONCRETE HEADWALL FOR RCPC

JICA JAPAN INTERNATIONAL COOPERATION AGENCY

KEI KATAHIRA & ENGINEERS INTERNATIONAL — YEC YACHIYO ENGINEERING CO., LTD.

	DATE	SIGNATURE
DESIGNED	9/14/02	F. STA. MARIA
CHECKED	9/18/02	
SUBMITTED	9/20/02	TEAM LEADER

REPUBLIC OF THE PHILIPPINES
DEPARTMENT OF PUBLIC WORKS AND HIGHWAYS

PJHL – PMO	BUREAU OF DESIGN		OFFICE OF THE SECRETARY	
Submitted By:	Reviewed By:	Recommended By:	Recommended By: (See cover sheet for Signature)	Approved By: (See cover sheet for Signature/Approval)
DANILO C. TRAJANO	JOSEFINA M. ALAGAR	GILBERTO S. REYES	MANUEL M. BONOAN	SIMEON A. DATUMANONG
Project Director	Chief, Highways Division	DIC, Director IV	Undersecretary	Secretary

PROJECT AND LOCATION :	SCALE :	SHEET CONTENTS :	SHEET NO. :
THE DETAILED DESIGN STUDY ON UPGRADING INTER-URBAN HIGHWAY SYSTEM ALONG THE PAN-PHILIPPINE HIGHWAY (Plaridel, Cabanatuan and San Jose Bypasses)	NOT TO SCALE	STANDARD REINFORCED CONCRETE HEADWALL FOR RCPC	DS-07
PLARIDEL BYPASS - CONTRACT PACKAGE I	FULL SIZE A1		

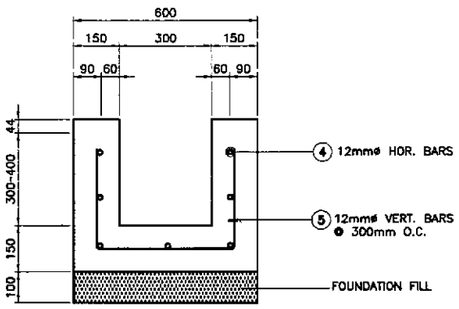

REINFORCED CONCRETE DITCH

1 / DS-08 TYPE BU
SCALE: 1:10

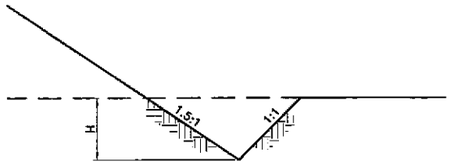

V-SHAPED UNLINED DITCH

TYPE E-4

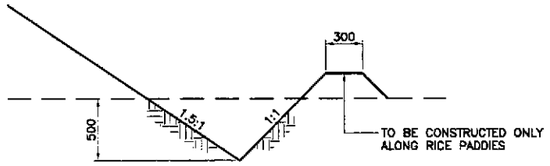

V-SHAPED UNLINED DITCH

TYPE E-3

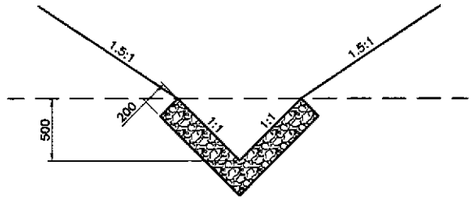

V-SHAPED LINED DITCH
(OUTER SEPARATOR DITCH)

TYPE E-2a

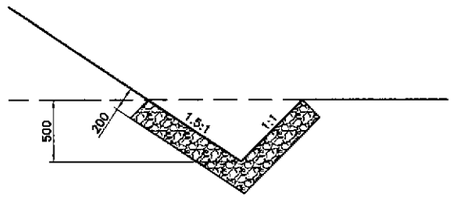

V-SHAPED LINED DITCH

TYPE E-2

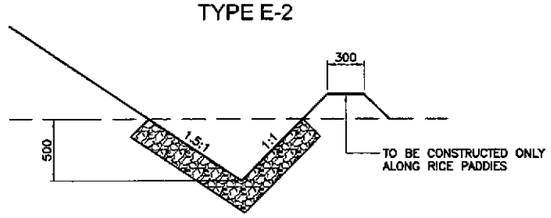

V-SHAPED LINED DITCH

TYPE E-1

3 / DS-08 TYPE E
SCALE: 1:25

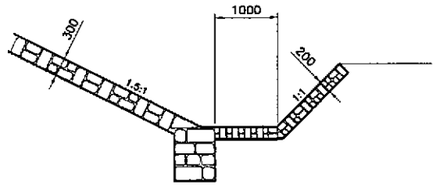

TYPE C-4

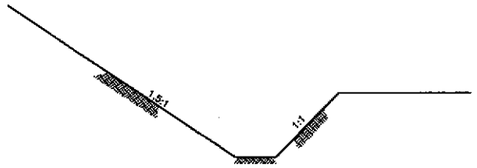

TYPE C-8

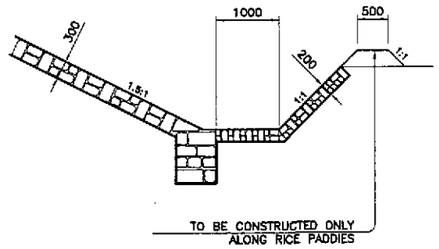

TYPE C-3

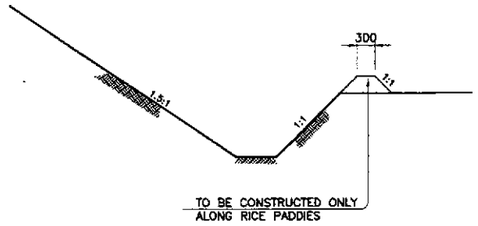

TYPE C-7

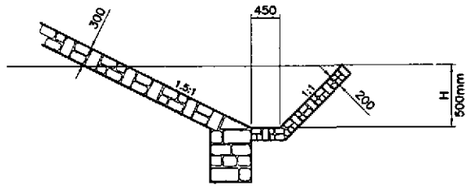

TYPE C-2

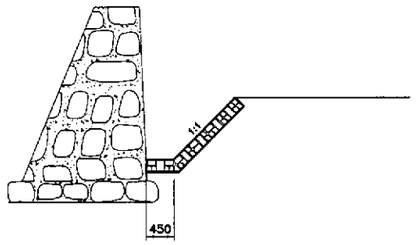

TYPE C-6

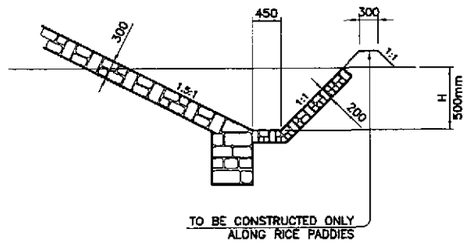

TYPE C-1

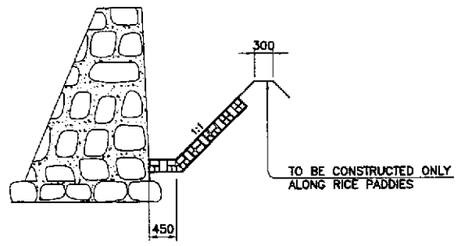

TYPE C-5

4 / DS-08 TYPE C
NOT TO SCALE

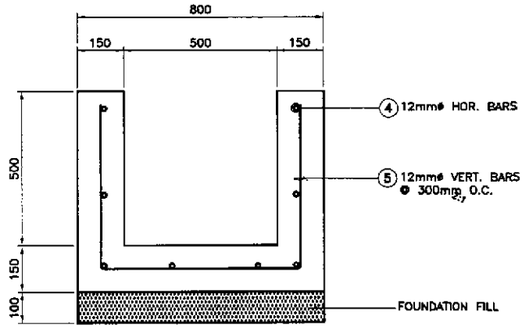

REINFORCED CONCRETE DITCH

2 / DS-08 TYPE U
SCALE: 1:10

STANDARD DRAINAGE DITCHES

JICA JAPAN INTERNATIONAL COOPERATION AGENCY; KATAHIRA & ENGINEERS INTERNATIONAL; YACHIYO ENGINEERING CO., LTD.	DATE / SIGNATURE	REPUBLIC OF THE PHILIPPINES DEPARTMENT OF PUBLIC WORKS AND HIGHWAYS	PROJECT AND LOCATION : THE DETAILED DESIGN STUDY ON UPGRADING INTER-URBAN HIGHWAY SYSTEM ALONG THE PAN-PHILIPPINE HIGHWAY (Plaridel, Cabanatuan and San Jose Bypasses)	SCALE :	SHEET CONTENTS :	SHEET NO. :
DESIGNED	7/12/02	PJHL – PMO				
CHECKED	07/12/02	BUREAU OF DESIGN	PLARIDEL BYPASS - CONTRACT PACKAGE I	NOT TO SCALE	STANDARD DRAINAGE DITCHES	DS-08
SUBMITTED	07/20/02	OFFICE OF THE SECRETARY		FULL SIZE A1		

Submitted By:	Reviewed By:	Recommended By:	Recommended By: (See cover sheet for Signature)	Approved By: (See cover sheet for Signature/Approved)
DANILO C. TRAJANO	JOSEFINA M. ALAGAR	GILBERTO S. REYES	MANUEL M. BONOAN	SIMEON A. DATUMANONG
Project Director	Chief, Highways Division	OIC, Director IV	Undersecretary	Secretary

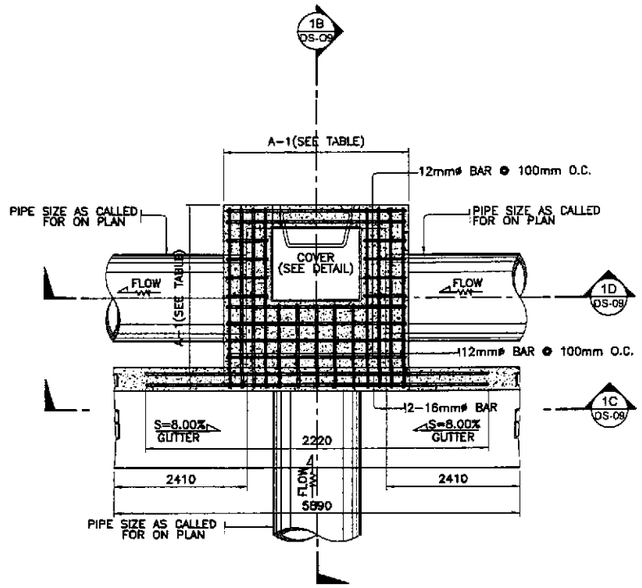

1A DS-09 PLAN

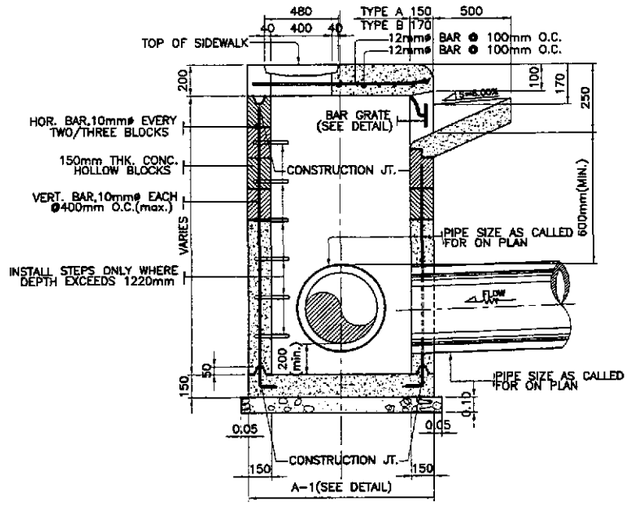

1B DS-09 SECTION

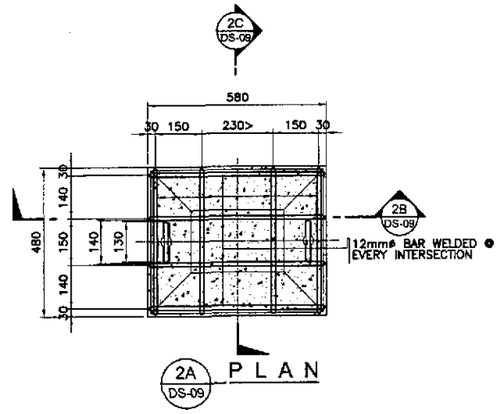

2A DS-09 PLAN

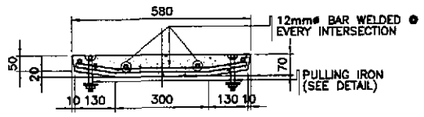

2B DS-09 SECTION

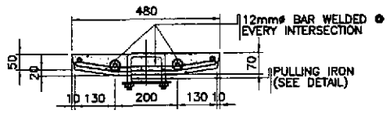

2C DS-09 SECTION

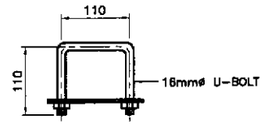

3A DS-09 PLAN

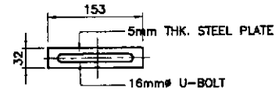

3B DS-09 ELEVATION

3 DS-09 PULLING IRON DETAIL
SCALE 1:5

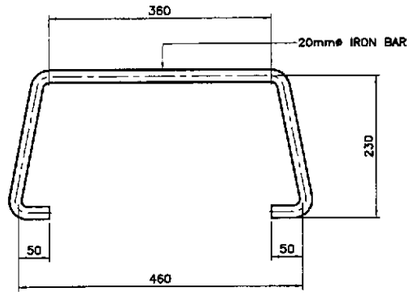

4 DS-09 STEP
SCALE 1:5

2 DS-09 CONCRETE COVER DETAIL
SCALE 1:10

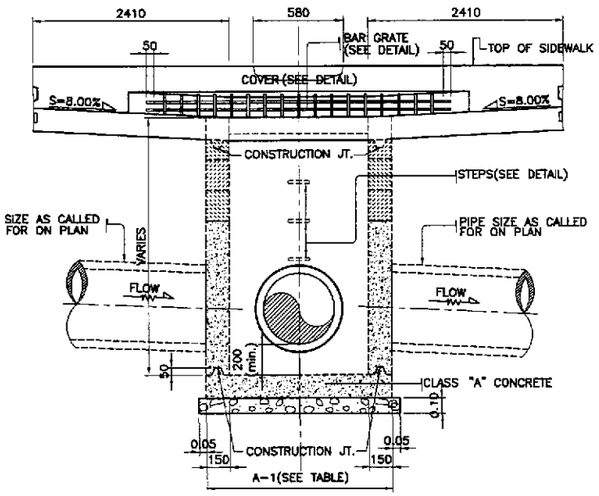

1C DS-09 SECTION
1:20

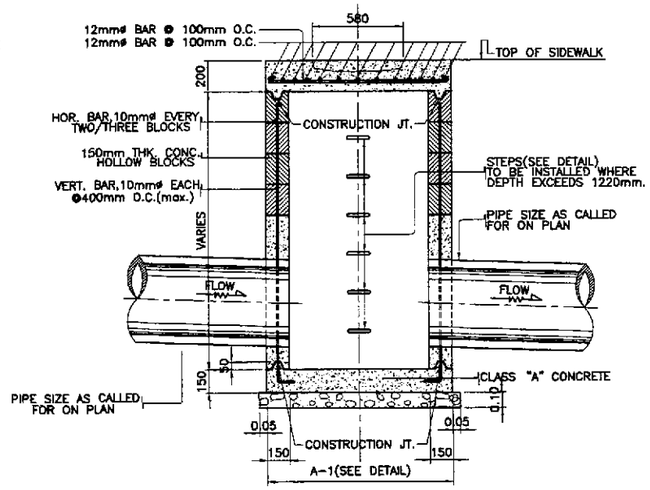

1D DS-09 SECTION

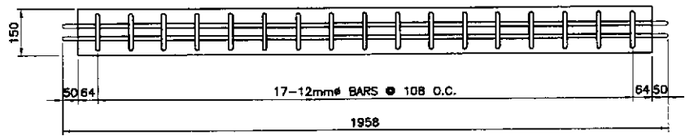

5 DS-09 DETAIL OF BAR GRATE FOR OPENING OF CURB INLET
SCALE 1:20

1 DS-09 CURB INLET MANHOLE
SCALE 1:20

TABLE OF DIMENSION		
TYPE OF CIM	SIZE OF PIPE (mm)	A-1
T-1	300	1.12 M.
T-2	460	1.19 M.
T-3	610	1.37 M.
T-4	760	1.54 M.
T-5	910	1.73 M.
T-6	1070	1.90 M.
T-7	1220	2.08 M.
T-8	1520	2.43 M.

NOTES:

1. ALL CONCRETE SHALL BE CLASS "A". EXPOSED EDGES SHALL BE FINISHED WITH SUITABLE EDGER.
2. PULLING IRON, STEPS AND BAR GRATE SHALL BE PAINTED WITH ONE COAT OF ZINC CHROMATE.
3. CONSTRUCTION JOINTS SHALL CONFORM WITH THE GROOVES OF CONCRETE HOLLOW BLOCKS.
4. CONCRETE HOLLOW BLOCKS OR DRESSED ADOBE BLOCKS SHALL HAVE AN AVERAGE COMPRESSIVE STRENGTH OF 6.865MPa.
5. IN CONCRETE HOLLOW BLOCKS STRUCTURE, ALL HOLES SHALL BE FILLED WITH CEMENT MORTAR.
6. WHERE CONCRETE HOLLOW BLOCKS STRUCTURES ATTAIN A HEIGHT OF 1.20 METER, IT SHALL BE REINFORCED STEEL BARS SPACE AT NOT MORE THAN 0.60 M. O.C. BOTHWAYS.
7. INSTALL STEPS ONLY WHERE DEPTH EXCEEDS 1.22 METERS.

DETAILS OF COMBINATION CURB INLET MANHOLE

JICA
JAPAN INTERNATIONAL COOPERATION AGENCY
KEI KATAHIRA & ENGINEERS INTERNATIONAL
YEC YACHIYO ENGINEERING CO., LTD.

	DATE	SIGNATURE
DESIGNED	9/10/02	F. STA. MARIA
CHECKED	9/10/02	F. STA. MARIA
SUBMITTED	9/10/02	M. KUCHI TEAM LEADER

REPUBLIC OF THE PHILIPPINES
DEPARTMENT OF PUBLIC WORKS AND HIGHWAYS

PJHL – PMO	BUREAU OF DESIGN		OFFICE OF THE SECRETARY	
Submitted By:	Reviewed By:	Recommended By:	Recommended By: (See cover sheet for Signature)	Approved By: (See cover sheet for Signature/Approval)
DANILO C. TRAJANO Project Director	JOSEFINA M. ALAGAR Chief, Highways Division	GILBERTO S. REYES OIC, Director IV	MANUEL M. BONOAN Undersecretary	SIMEON A. DATUMANONG Secretary

PROJECT AND LOCATION :	SCALE :	SHEET CONTENTS :	SHEET NO. :
THE DETAILED DESIGN STUDY ON UPGRADING INTER-URBAN HIGHWAY SYSTEM ALONG THE PAN-PHILIPPINE HIGHWAY (Plaridel, Cabanatuan and San Jose Bypasses)	AS SHOWN	STANDARD COMBINATION CURB INLET MANHOLE	DS-09
PLARIDEL BYPASS - CONTRACT PACKAGE I	FULL SIZE A1		

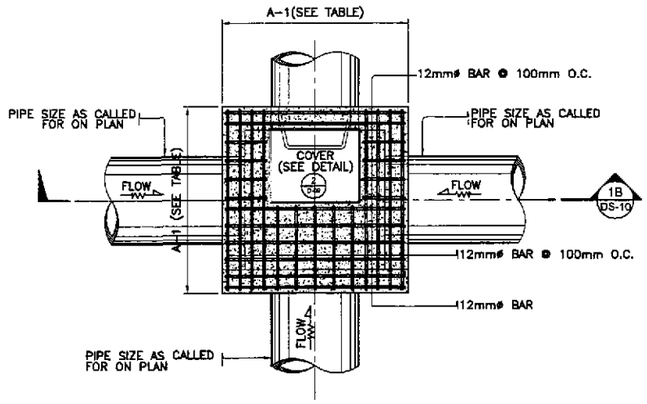

1A DS-10 PLAN BOX-TYPE MANHOLE (SINGLE PIPE)

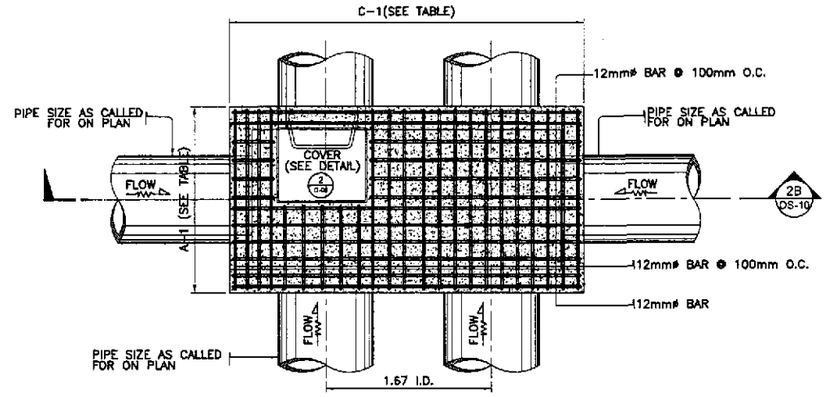

2A DS-10 PLAN BOX-TYPE MANHOLE (DOUBLE PIPE)

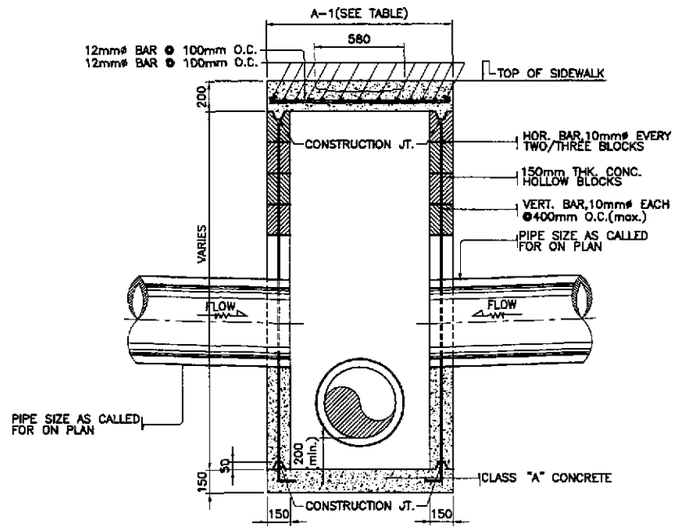

1B DS-10 SECTION

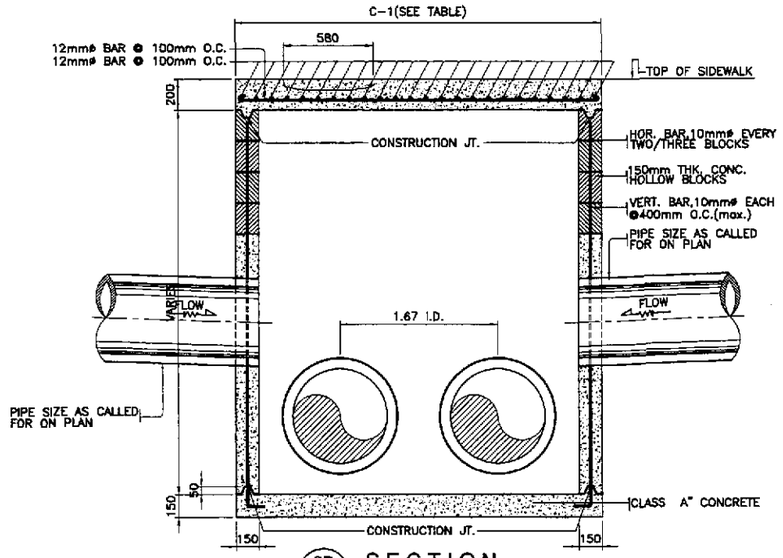

2B DS-10 SECTION

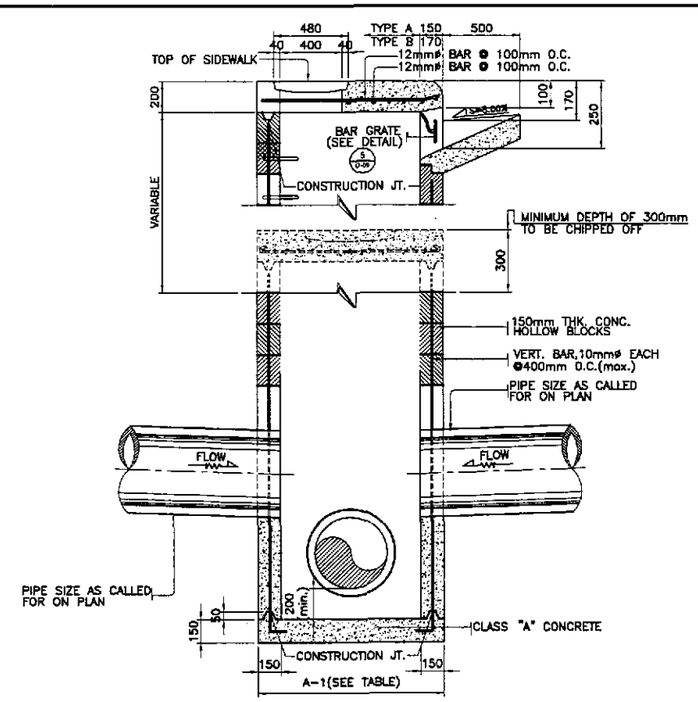

3 DS-10 BOX-TYPE CONVERTED TO CURB INLET MANHOLE

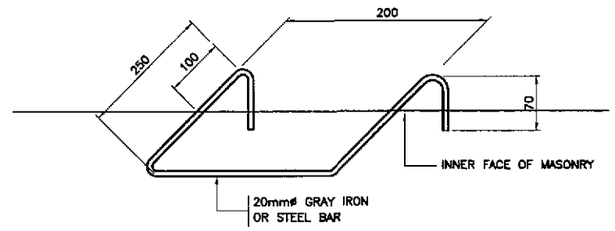

4 DS-10 STD. STEP OR RUNG

TABLE OF MANHOLE					
(H) HEIGHT mm.	(T) THICKNESS OF WALL (mm)	VERTICAL BARS			HORIZONTAL BARS
		INSIDE EDGE	CENTER	OUTSIDE EDGE	
1000	150mm CHB	–	10mmø @ 200	–	10mmø @ 400
2000	150mm CHB	–	12mmø @ 200	–	10mmø @ 400
3000	180mm CONC.	20mmø @ 300	–	32mmø @ 300	10mmø @ 400
4000	230mm CONC.	20mmø @ 250	–	32mmø @ 250	10mmø @ 400
5000	280mm CONC.	20mmø @ 225	–	32mmø @ 225	10mmø @ 400
6000	330mm CONC.	20mmø @ 200	–	32mmø @ 200	10mmø @ 400
7000	380mm CONC.	20mmø @ 175	–	32mmø @ 175	10mmø @ 400
8000	410mm CONC.	20mmø @ 150	–	32mmø @ 150	10mmø @ 400

TABLE OF DIMENSION			
TYPE OF CIM	SIZE OF PIPE (mm)	A-1 (m)	C-1 (m)
T-1	300	1.12	1.92
T-2	460	1.19	2.26
T-3	610	1.37	2.69
T-4	760	1.54	3.11
T-5	910	1.73	3.55
T-6	1070	1.90	3.98
T-7	1220	2.08	4.42
T-8	1520	2.43	5.27

NOTES:

1. ALL CONCRETE SHALL BE CLASS "A". EXPOSED EDGES SHALL BE FINISHED WITH SUITABLE EDGER.
2. PULLING IRON, STEPS AND BAR GRATE SHALL BE PAINTED WITH ONE COAT OF ZINC CHROMATE.
3. CONSTRUCTION JOINTS SHALL CONFORM WITH THE GROOVES OF CONCRETE HOLLOW BLOCKS.
4. CONCRETE HOLLOW BLOCKS OR DRESSED ADOBE BLOCKS SHALL HAVE AN AVERAGE COMPRESSIVE STRENGTH OF 8.865MPa.
5. IN CONCRETE HOLLOW BLOCKS STRUCTURE, ALL HOLES SHALL BE FILLED WITH CEMENT MORTAR.
6. WHERE CONCRETE HOLLOW BLOCKS STRUCTURES ATTAIN A HEIGHT OF 1.20 METER, IT SHALL BE REINFORCED STEEL BARS SPACE AT NOT MORE THAN 0.60 M. O.C. BOTHWAYS.
7. INSTALL STEPS ONLY WHERE DEPTH EXCEEDS 1.22 METERS.
8. 150 mm BOTTOM SLAB THICKNESS FOR HEIGHT OF 1000 TO 4000mm. AND 200mm. FOR 5000 TO 8000mm IN HIEGHT.
9. FROM THE HEIGHT OF 3000 TO 8000mm. THE FIRST 2000mm, FROM THE TOP IS CHB WITH DETAILS FOR 2000mm HEIGHT.
10. REINFORCEMENT FOR BOTTOM SLAB ARE ALL 10mmø @ 400 B.W.
11. VERTICAL BARS ARE CUT AT HALF POINT FOR EVERY OTHER BAR AT SOLID WALL.
12. INSIDE SURFACES AND OUTSIDE SURFACES OF ALL MASONRY SHALL HAVE A PLASTER COAT 1/2" THICK.
13. BOX TYPE MANHOLE SHAL NOT BE CONSTRUCTED WITHIN THE RIDING SURFACE.

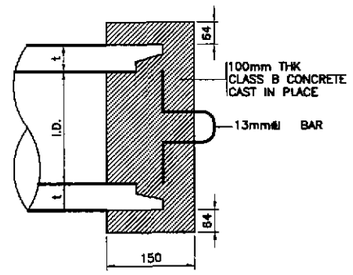

5 DS-10 CONCRETE BLOCK PLUG @ SUBSURFACE PIPE

SPECIAL JUNCTION BOX MANHOLE

JICA
JAPAN INTERNATIONAL COOPERATION AGENCY

KATAHIRA & ENGINEERS INTERNATIONAL
YACHIYO ENGINEERING CO., LTD.

	DATE	SIGNATURE
DESIGNED	9/16/02	
CHECKED	9/18/02	
SUBMITTED	9/20/02	

REPUBLIC OF THE PHILIPPINES
DEPARTMENT OF PUBLIC WORKS AND HIGHWAYS

PJHL – PMO	BUREAU OF DESIGN		OFFICE OF THE SECRETARY	
Submitted By:	Reviewed By:	Recommended By:	Recommended By: (See cover sheet for Signature)	Approved By: (See cover sheet for Signature/Approval)
DANILO C. TRAJANO	JOSEFINA M. ALAGAR	GILBERTO S. REYES	MANUEL M. BONOAN	SIMEON A. DATUMANONG
Project Director	Chief, Highways Division	OIC, Director IV	Undersecretary	Secretary

PROJECT AND LOCATION :	SCALE :	SHEET CONTENTS :	SHEET NO. :
THE DETAILED DESIGN STUDY ON UPGRADING INTER-URBAN HIGHWAY SYSTEM ALONG THE PAN-PHILIPPINE HIGHWAY (Plaridel, Cabanatuan and San Jose Bypasses)	AS SHOWN	SPECIAL JUNCTION BOX MANHOLE	DS-10
PLARIDEL BYPASS - CONTRACT PACKAGE I	FULL SIZE A1		

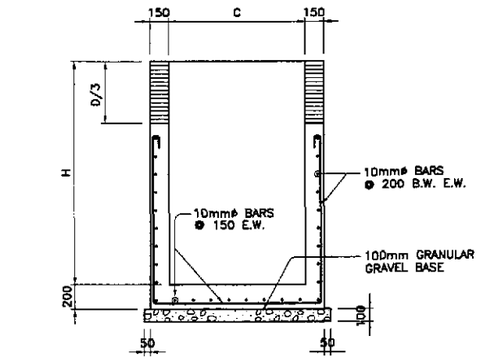

1C DS-11 SECTION

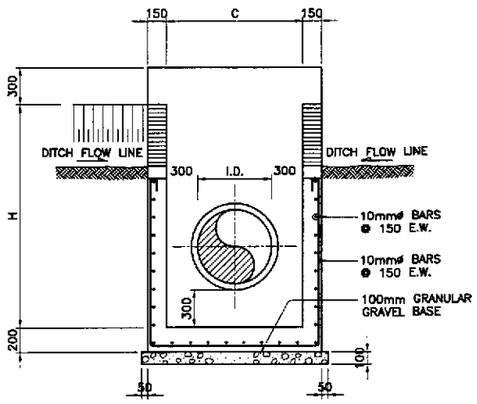

1B DS-11 SECTION

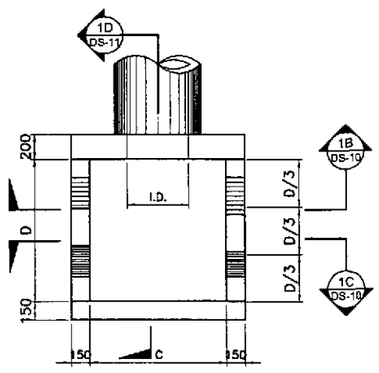

1A DS-11 PLAN

1 DS-11 CONCRETE CATCH BASIN (SINGLE PIPE)
SCALE 1:25

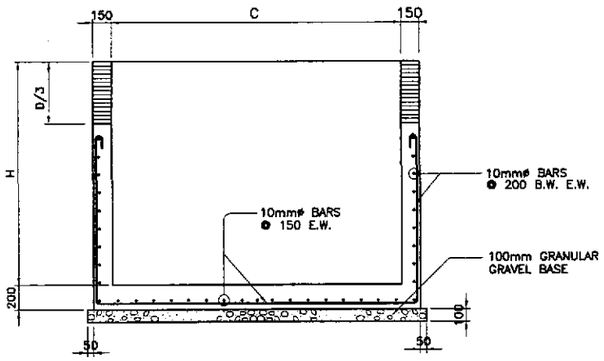

2C DS-11 SECTION

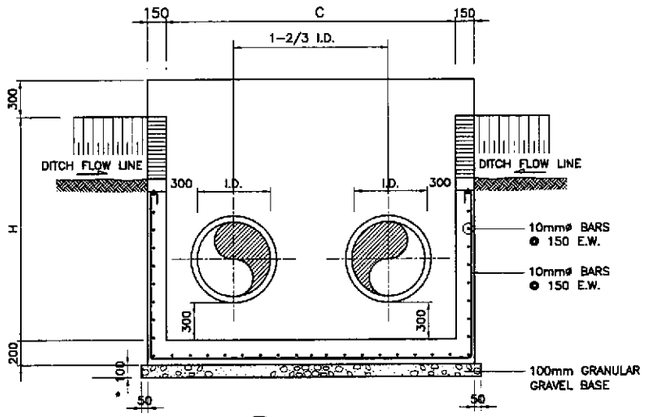

2B DS-11 SECTION

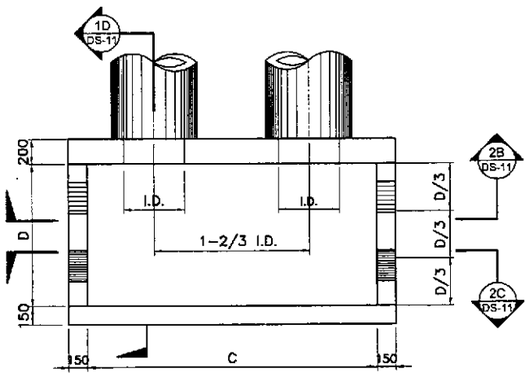

2A DS-11 PLAN

2 DS-11 CONCRETE CATCH BASIN (DOUBLE PIPE)
SCALE 1:25

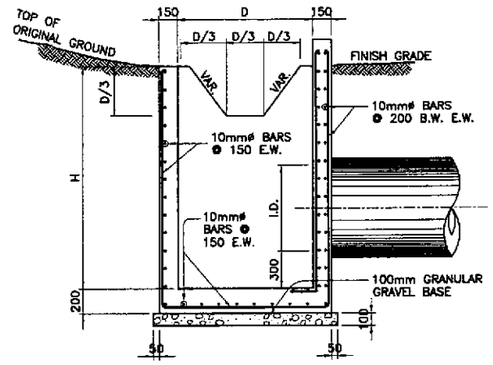

1C DS-11 SECTION

REINFORCED CONCRETE CATCH BASIN DIMENSION FOR RCPC

PIPE DIAMETER (mm)		610	910	1070	1220	1520
COMMON TO ALL NUMBER OF BARRELS	H	1.910	2.210	2.370	2.520	2.820
	D	1.200	1.500	1.650	1.800	2.100
SINGLE	C	1.210	1.510	1.670	1.820	2.120
DOUBLE	C	2.230	3.030	3.460	3.860	4.660
TRIPLE	C	3.250	4.550	5.240	5.890	7.120

DETAILS OF REINFORCED CONCRETE CATCH BASIN FOR RCPC

JICA
JAPAN INTERNATIONAL COOPERATION AGENCY
KATAHIRA & ENGINEERS INTERNATIONAL
YACHIYO ENGINEERING CO., LTD.

	DATE	SIGNATURE
DESIGNED	9/16/02	
CHECKED	9/18/02	
SUBMITTED	9/20/02	

REPUBLIC OF THE PHILIPPINES
DEPARTMENT OF PUBLIC WORKS AND HIGHWAYS

PJHL – PMO	BUREAU OF DESIGN		OFFICE OF THE SECRETARY	
Submitted By:	Reviewed By:	Recommended By:	Recommended By: (See cover sheet for Signature)	Approved By: (See cover sheet for Signature/Approval)
DANILO C. TRAJANO	JOSEFINA M. ALAGAR	GILBERTO S. REYES	MANUEL M. BONGAN	SIMEON A. DATUMANONG
Project Director	Chief, Highways Division	OIC, Director IV	Undersecretary	Secretary

PROJECT AND LOCATION :
THE DETAILED DESIGN STUDY ON UPGRADING INTER-URBAN HIGHWAY SYSTEM ALONG THE PAN-PHILIPPINE HIGHWAY (Plaridel, Cabanatuan and San Jose Bypasses)
PLARIDEL BYPASS - CONTRACT PACKAGE I

SCALE : 1:25 FULL SIZE A1

SHEET CONTENTS : STANDARD REINFORCED CONCRETE CATCH BASIN FOR RCPC

SHEET NO. : DS-11

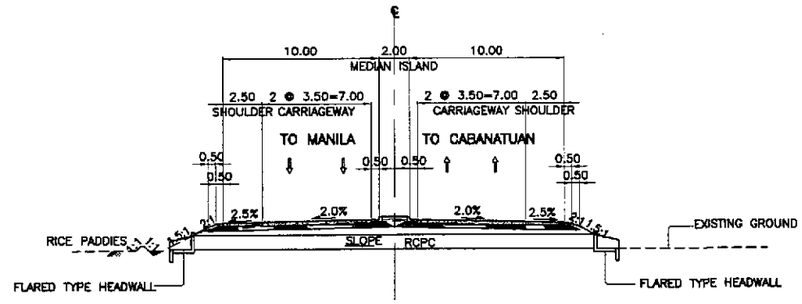

1 DS-12 TYPICAL DRAINAGE SECTION (ULTIMATE STAGE)

SCALE 1:200

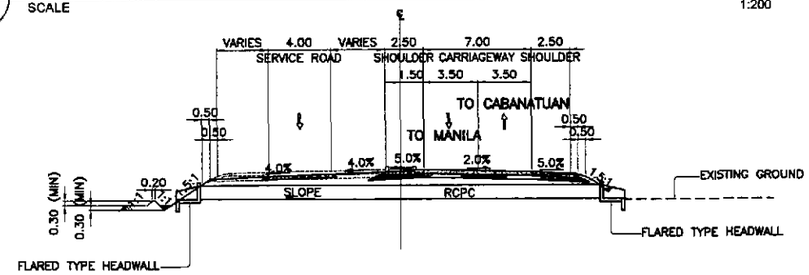

2 DS-12 TYPICAL DRAINAGE SECTION (INITIAL STAGE)

SCALE 1:200

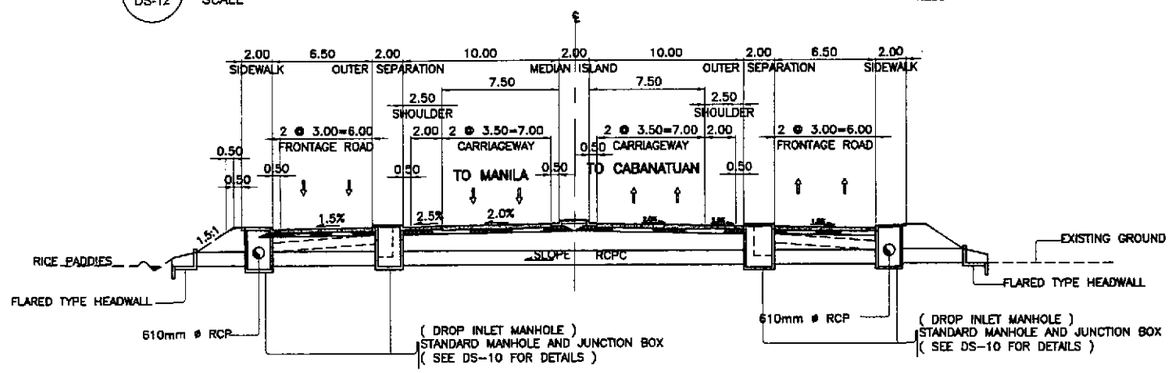

TYPICAL DRAINAGE SECTION WITH CURB INLET MANHOLE
(ULTIMATE STAGE)

3 DS-12 SCALE 1:200

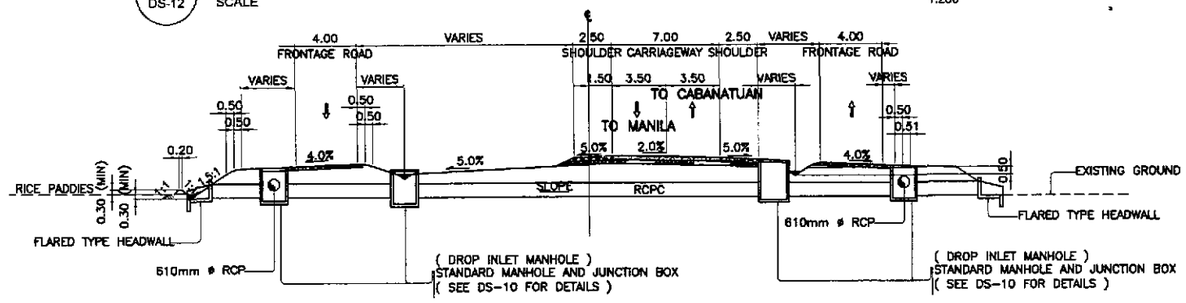

TYPICAL DRAINAGE SECTION WITH DROP INLET MANHOLE
(INITIAL STAGE)

4 DS-12 SCALE 1:200

JICA
JAPAN INTERNATIONAL COOPERATION AGENCY

KEI KATAHIRA & ENGINEERS INTERNATIONAL
YEC YACHIYO ENGINEERING CO., LTD.

	DATE	SIGNATURE
DESIGNED	9/16/02	
CHECKED	9/18/02	
SUBMITTED	9/20/02	TEAM LEADER

REPUBLIC OF THE PHILIPPINES
DEPARTMENT OF PUBLIC WORKS AND HIGHWAYS

PMH. – PMO	BUREAU OF DESIGN		OFFICE OF THE SECRETARY	
Submitted By:	Reviewed By:	Recommended By:	Recommended By: (See cover sheet for Signature)	Approved By: (See cover sheet for Signature/Approval)
DANILO C. TRAJANO	JOSEFINA M. ALAGAR	GILBERTO S. REYES	MANUEL M. BONOAN	SIMEON A. DATUMANONG
Project Director	Chief, Highways Division	OIC, Director IV	Undersecretary	Secretary

PROJECT AND LOCATION :	SCALE :	SHEET CONTENTS :	SHEET NO. :
THE DETAILED DESIGN STUDY ON UPGRADING INTER-URBAN HIGHWAY SYSTEM ALONG THE PAN-PHILIPPINE HIGHWAY (Plaridel, Cabanatuan and San Jose Bypasses)	NOT TO SCALE	TYPICAL DRAINAGE SECTIONS WITH MANHOLE (INITIAL and ULTIMATE STAGE)	DS-12
PLARIDEL BYPASS - CONTRACT PACKAGE I	FULL SIZE A1		

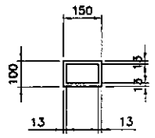

PLAN (POST)

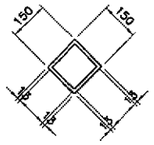

PLAN (POST)

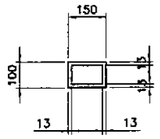

PLAN (POST)

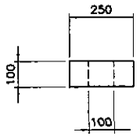

PLAN (POST)

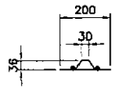

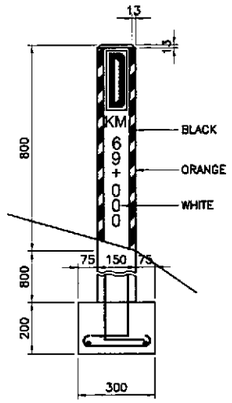

ELEVATION
CONCRETE MARKER
TYPE I-a

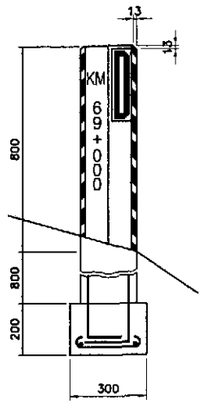

ELEVATION
CONCRETE MARKER
TYPE I-b

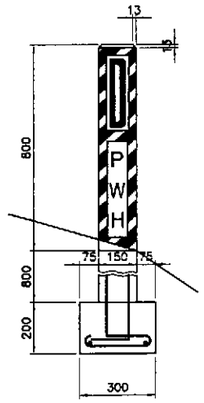

ELEVATION
CONCRETE MARKER
TYPE I-c

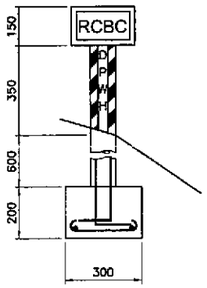

ELEVATION
CONCRETE MARKER
TYPE I-d

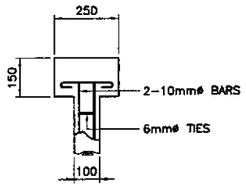

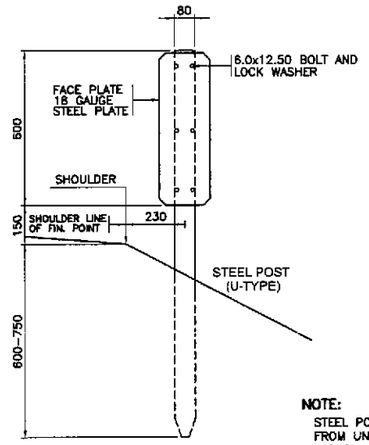

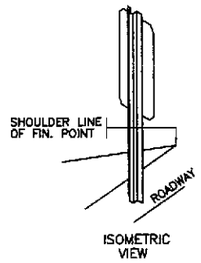

ISOMETRIC
VIEW

NOTE:
STEEL POST MAY BE CHANNEL TAKEN FROM UNUSED BAILEY PANNELS MARKINGS AND PAINTINGS SAME AS FOR TYPE I AND TYPE II AS SHOWN.

ELEVATION
STEEL MARKER
TYPE II

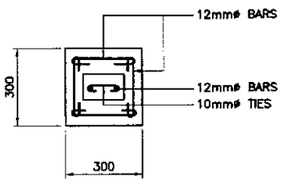

TYPICAL FOOTING DETAIL
CONCRETE MARKER
(TYPE I-a,b,c,d)

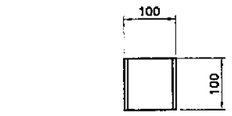

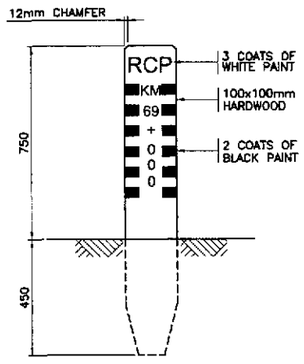

ELEVATION
WOODEN MARKER
TYPE III-a

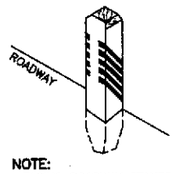

NOTE:
FACING ROADWAY STAKED AT CENTER LINE OF DRAINAGE 254mm AWAY FROM SHOULDER LINE OF FINAL POINT.

ISOMETRIC
VIEW

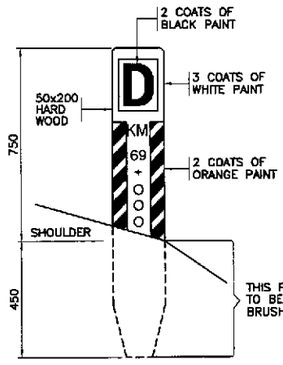

ELEVATION
WOODEN MARKER
TYPE III-b

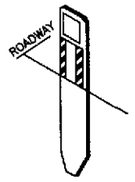

ISOMETRIC
VIEW

GENERAL NOTES

CONCRETE:
ALL CONCRETE TO BE CLASS "A" AND EXPOSED TOP TO BE CHAMFERED 13.0mm. ALL CONCRETE SHALL POURED IN THE DRY.

REINFORCING STEEL:
UNLESS OTHERWISE SHOWN ALL BAR SPACINGS ARE TO THE CENTER OF BARS AND THE MINIMUM COVERING OF BARS MEASURED FROM THE SURFACE OF THE CONCRETE TO THE FACE OF ANY BARS SHALL BE 50.0mm.

MARKINGS:
ALL RECESSED LETTERS SHALL BE CAST INTO CONCRETE AND ALL NUMBERS SHALL BE PAINTED AS SHOWN USING LETTER AND NUMBER FORM.

PAINTINGS:
ALL CONCRETE POSTS, TWO COATS OF WHITE PAINT. ALL RECESSED LETTERS ONE (1) COAT OF BLACK PAINT AND ALL BACKGOUND STRIPE SHALL BE ONE (1) COAT OF BLACK/ORANGE GLOSSED PAINT. ALL STRUCTURAL PLATES TWO COATS WHITE SHARP PAINT.

LOCATION:
DRAINAGE CULVERT MARKER TO BE SET AT SHOULDER LINE AND AT CENTER LINE OF CULVERT FACING TRAFFIC/ROADWAY AS SHOWN AND AS STAKED BY ENGINEERS.

DIMENSION:
ALL DIMENSIONS ARE IN MILLIMETERS UNLESS OTHERWISE STATED.

A / DS-13 — STANDARD MAINTENANCE MARKERS
NOT TO SCALE

JICA — JAPAN INTERNATIONAL COOPERATION AGENCY; KATAHIRA & ENGINEERS INTERNATIONAL; YACHIYO ENGINEERING CO., LTD.	DATE	SIGNATURE	REPUBLIC OF THE PHILIPPINES — DEPARTMENT OF PUBLIC WORKS AND HIGHWAYS	PROJECT AND LOCATION :	SCALE :	SHEET CONTENTS :	SHEET NO. :
DESIGNED	9/16/02		PJHL – PMO: Submitted By: DANILO C. TRAJANO, Project Director	THE DETAILED DESIGN STUDY ON UPGRADING INTER-URBAN HIGHWAY SYSTEM ALONG THE PAN-PHILIPPINE HIGHWAY (Plaridel, Cabanatuan and San Jose Bypasses)	NOT TO SCALE	STANDARD MAINTENANCE MARKERS	DS-13
CHECKED	9/18/02		BUREAU OF DESIGN: Reviewed By: JOSEFINA M. ALAGAR, Chief, Highways Division; Recommended By: GILBERTO S. REYES, OIC, Director IV	PLARIDEL BYPASS - CONTRACT PACKAGE I	FULL SIZE A1		
SUBMITTED	9/20/02	TEAM LEADER	OFFICE OF THE SECRETARY: Recommended By: (See cover sheet for Signature) MANUEL M. BONGAN, Undersecretary; Approved By: (See cover sheet for Signature/Approval) SIMEON A. DATUMANONG, Secretary				

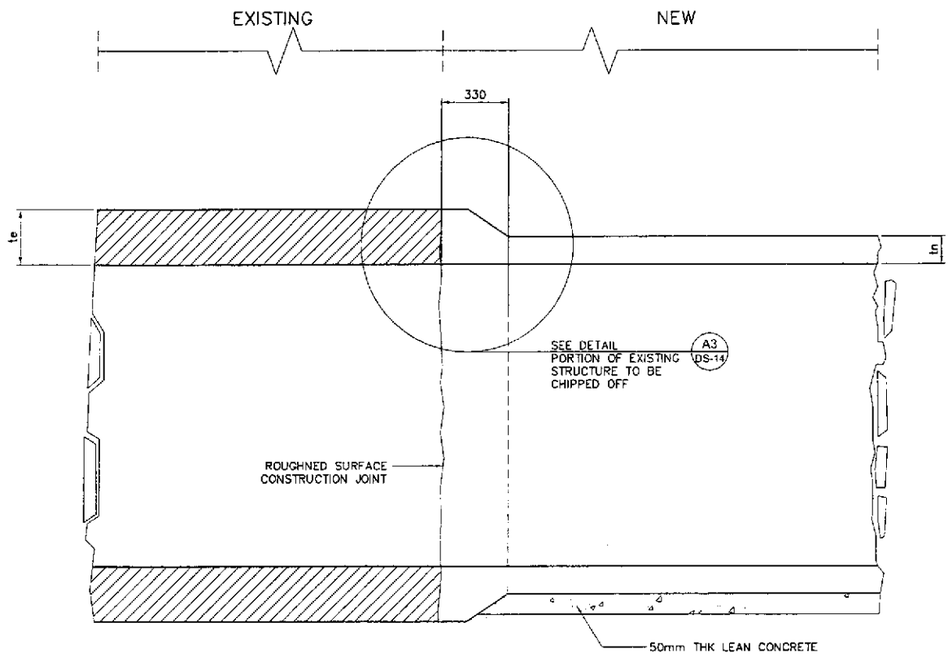

A1 / DS-14 CASE 1 : tn < te
NOT TO SCALE

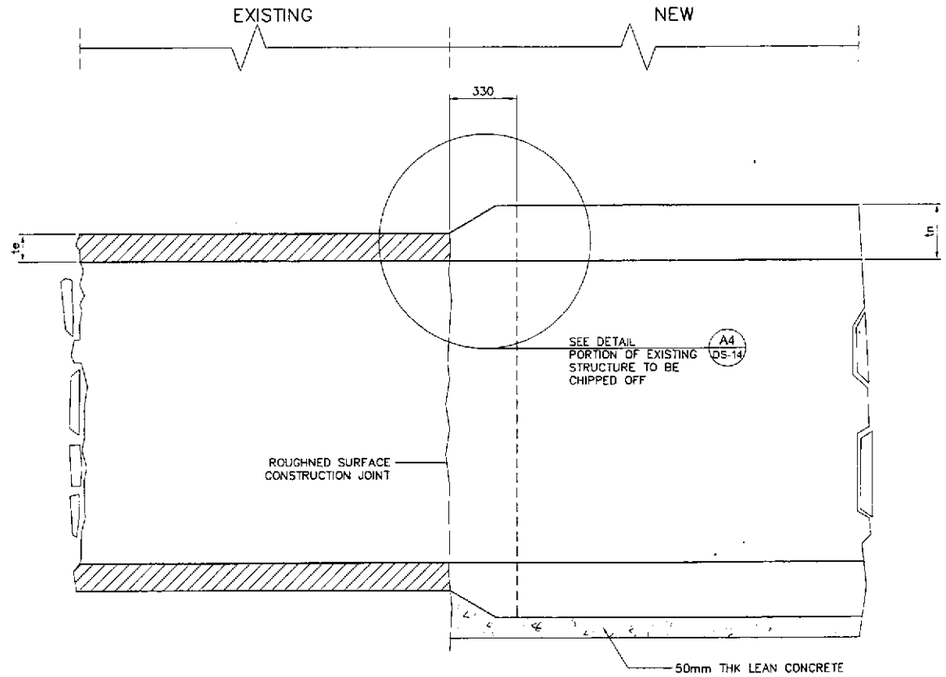

A2 / DS-14 CASE 2 : tn < te
NOT TO SCALE

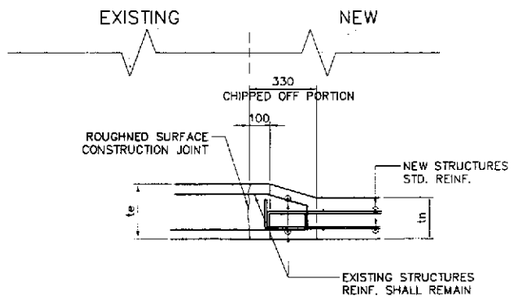

A3 / DS-14 DETAIL
NOT TO SCALE

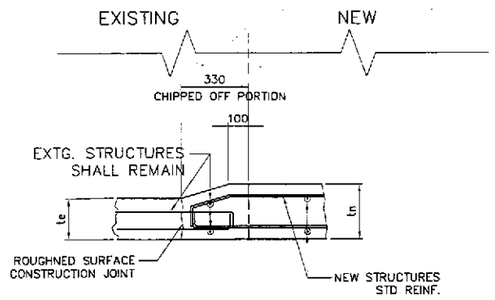

A4 / DS-14 DETAIL
NOT TO SCALE

A / DS-14 TYPICAL RCBC EXTENSION
SCALE AS SHOWN

JICA
JAPAN INTERNATIONAL COOPERATION AGENCY
KEI KATAHIRA & ENGINEERS INTERNATIONAL
YEC YACHIYO ENGINEERING CO., LTD.

REPUBLIC OF THE PHILIPPINES
DEPARTMENT OF PUBLIC WORKS AND HIGHWAYS

	DATE	SIGNATURE	PJHL – PMC	BUREAU OF DESIGN		OFFICE OF THE SECRETARY	
DESIGNED	9/12/02						
CHECKED	9/12/02		Submitted By:	Reviewed By:	Recommended By:	Recommended By: (See cover sheet for Signature)	Approved By: (See cover sheet for Signature/Approval)
SUBMITTED	9/20/02	TEAM LEADER	DANILO C. TRAJANO, Project Director	JOSEFINA M. ALAGAR, Chief, Highways Division	GILBERTO S. REYES, OIC, Director IV	MANUEL M. BONOAN, Undersecretary	SIMEON A. DATUMANONG, Secretary

PROJECT AND LOCATION :	SCALE :	SHEET CONTENTS :	SHEET NO. :
THE DETAILED DESIGN STUDY ON UPGRADING INTER-URBAN HIGHWAY SYSTEM ALONG THE PAN-PHILIPPINE HIGHWAY (Plaridel, Cabanatuan and San Jose Bypasses)	NOT TO SCALE	TYPICAL RCBC EXTENSION	DS-14
PLARIDEL BYPASS - CONTRACT PACKAGE I	FULL SIZE A1		