DRAWINGS

CONTENTS

COMPONENT A

CENTRAL SULAWESI

B-7 KOKOBUKA II

B-8 KOKOBUKA III

B-10 KOKOBUKA V

B-17 TAYADUN II

B-18 TAYADUN III

B-19 BONOBOGU I

COMPONENT B

CENTRAL SULAWESI

B-4 PUJIMULYO I

B-6 KOKOBUKA I

B-11 KOKOBUKA VI

B-12 KOKOBUKA VII

B-13 BONGKUDO I

B-21 MATINAN

S-26 PATUKUKI I

S-27 PATUKUKI II

NORTH SULAWESI

No.3 POIGAR

No.4 MEGAWATI

SECTION	SCALE	DRAWING NO.	SHEET NO.
			1 OF 29
DRAWING TITLE	BR.NO.B7,8 KOKOBUKA II,III GENERAL VIEW OF THE SITE		

BR.NO.B7,8 KOKOBUKA II,III
GENERAL VIEW OF THE SITE

	X	Y	Z
BM BO7A	307437.595	112780.329	26.353
BM BO8A	307413.997	112907.585	27.915
BM BO8B	307420.867	112835.658	26.508

PLAN
SCALE 1:1000

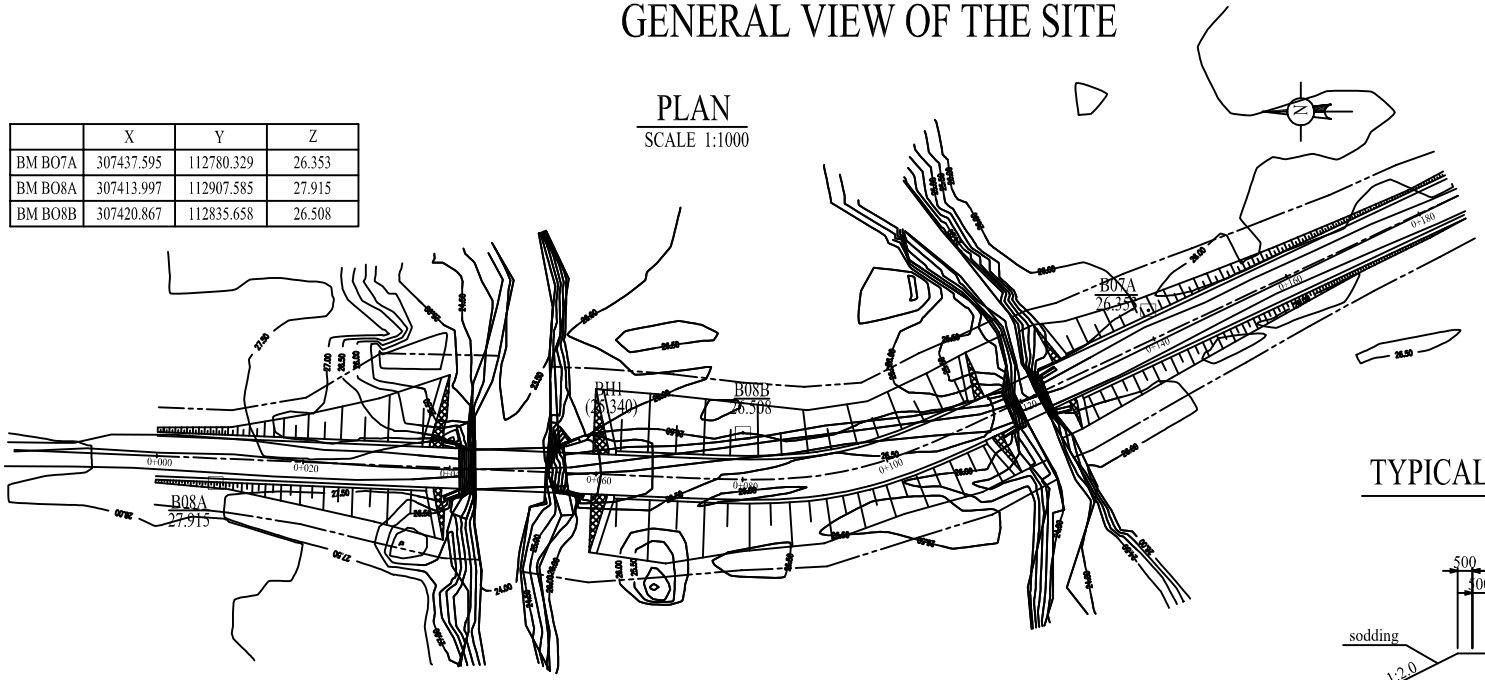

TYPICAL CROSS SECTION
SCALE 1:250

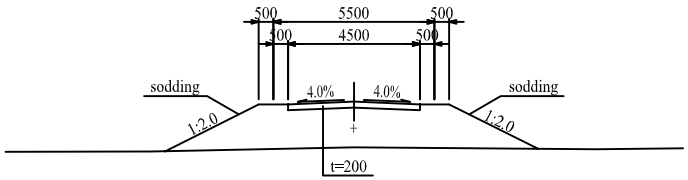

PROFILE
SCALE V=1:500
H=1:1000

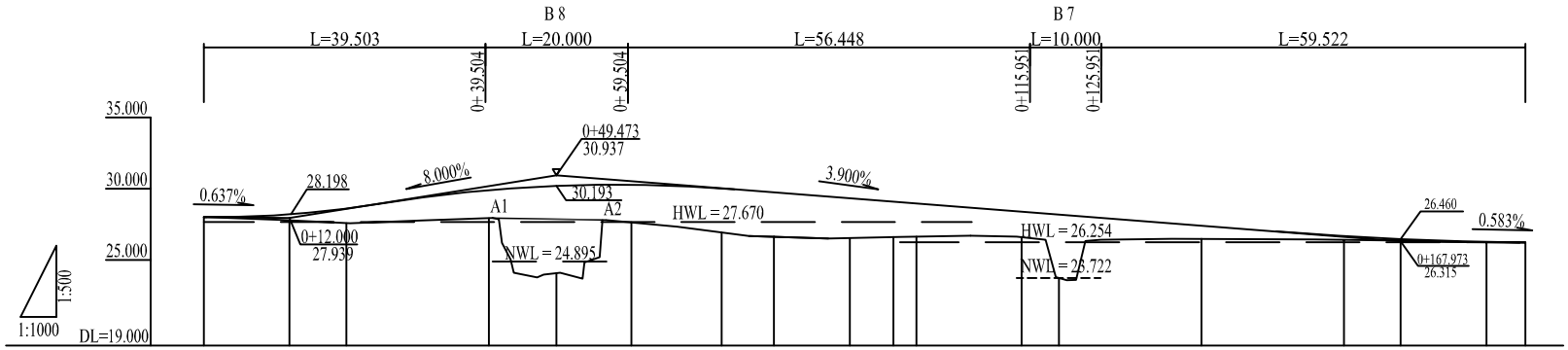

GROUND HEIGHT	28.015	27.776	27.581	27.931	24.080	27.634	26.930	26.627	26.534	26.610	26.638	26.602	23.737	26.478	26.404	26.344	26.245	26.213
STATION	NO. 0	+12.000	+20.000	+40.000	+49.473	+60.000	+72.672	+80.000	+90.672	+96.751	+100.000	+114.751	+120.000	+140.000	+160.000	+167.973	+180.000	+185.473

SECTION	SCALE	DRAWING NO.	SHEET NO.
	1/100 ,1/400		2 OF 29
DRAWING TITLE	BR.NO.B7 KOKOBUKA II GENERAL VIEW OF THE BRIDGE		

BR.NO.B7 KOKOBUKA II
GENERAL VIEW OF THE BRIDGE

PROFILE
SCALE 1:400

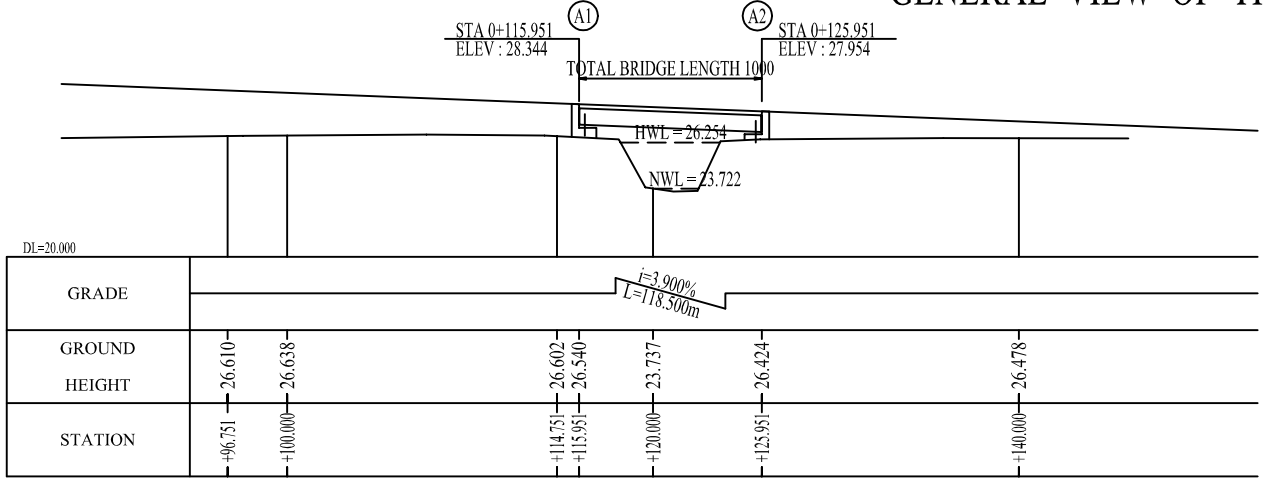

PLAN
SCALE 1:400

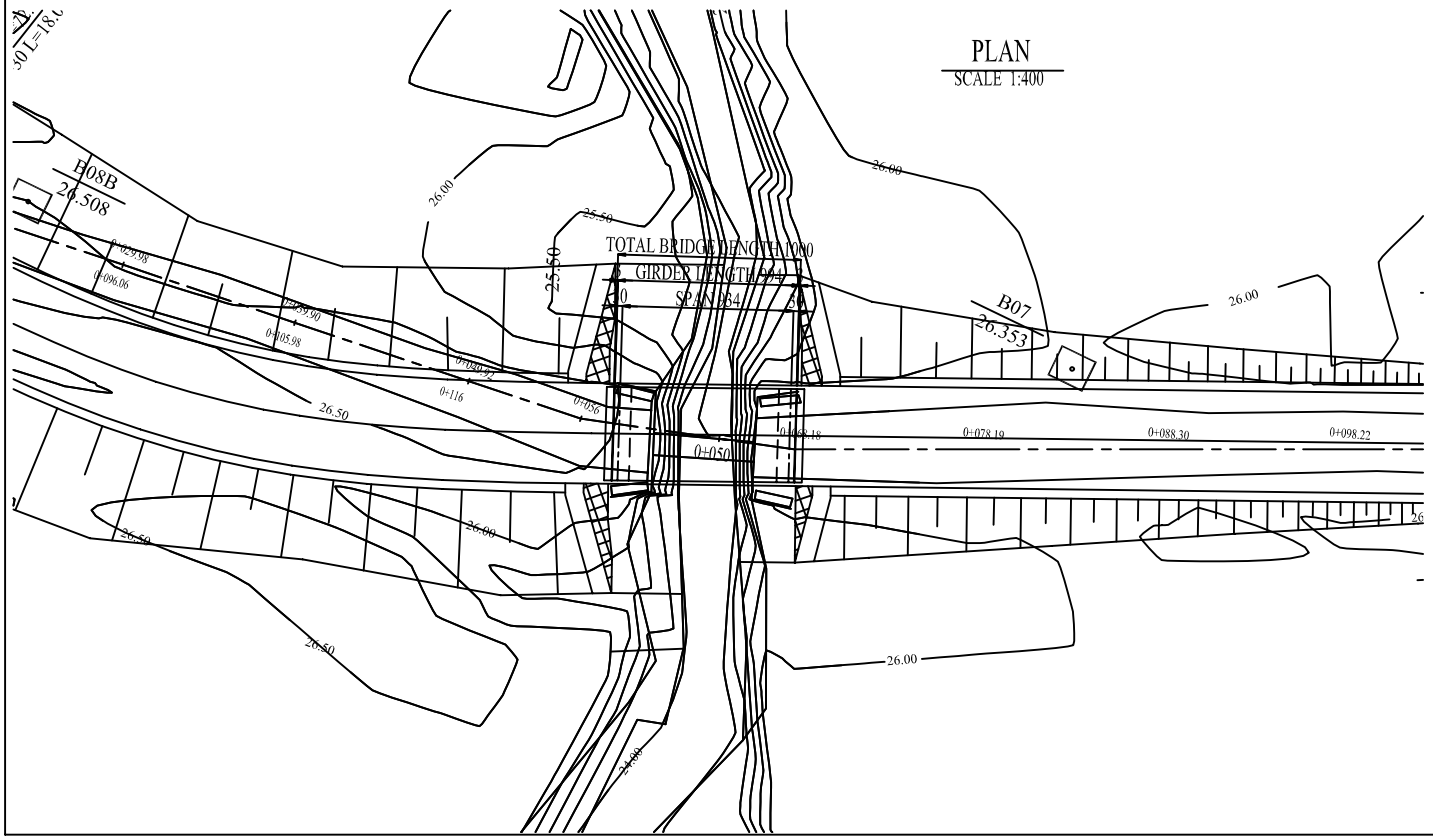

CROSS SECTION FOR METAL GIRDER
SCALE 1:100

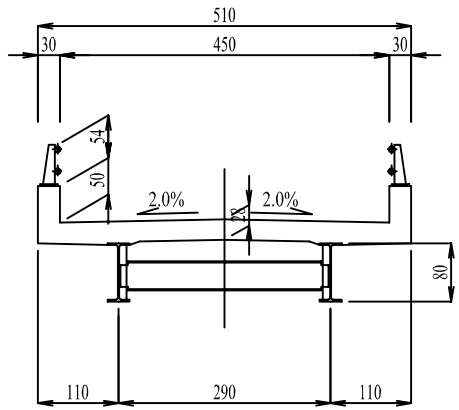

CROSS SECTION FOR GIRDER
SCALE 1:50

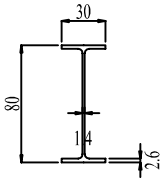

DESIGN CRITERIA

General Condition	
Design Live Load	"D" Lane Load
Design Speed	V=40km/h
Bridge Length(Span Length)	10.00m(9.34m)
Longitudinal Gradient	-3.900%
Cross-fall of Carriage way	2.00%
Super Structure Type	H Beam

SECTION	SCALE	DRAWING NO.	SHEET NO.
	1/100 ,1/400		3 OF 29
DRAWING TITLE	BR.NO.B8 KOKOBUKA III GENERAL VIEW OF THE BRIDGE		

BR.NO.B8 KOKOBUKA III
GENERAL VIEW OF THE BRIDGE

PROFILE
SCALE 1:400

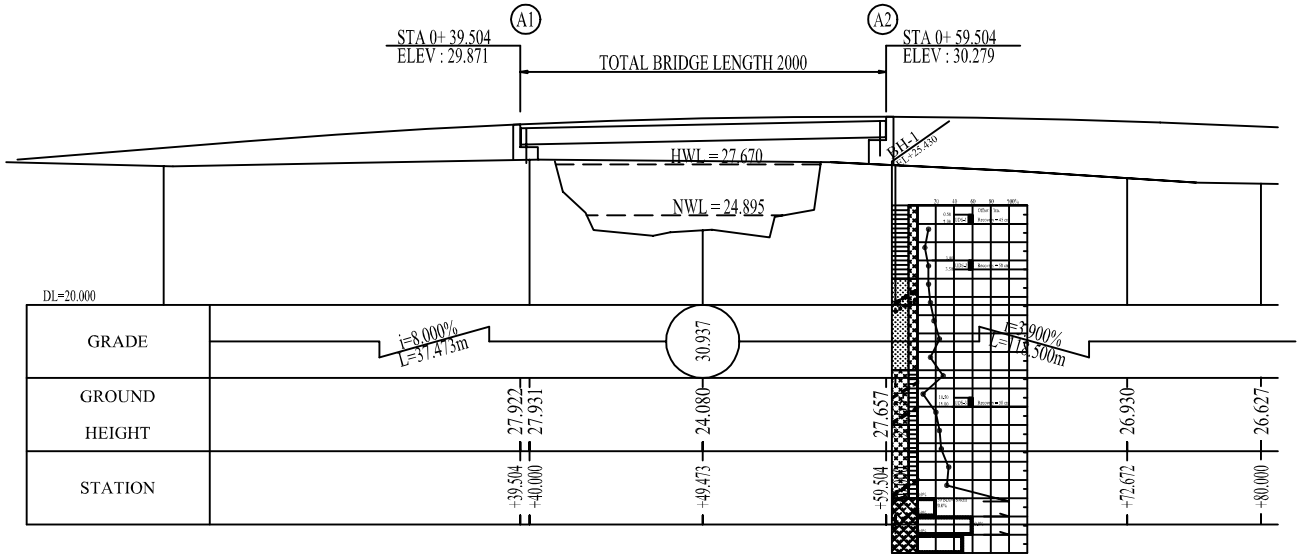

PLAN
SCALE 1:400

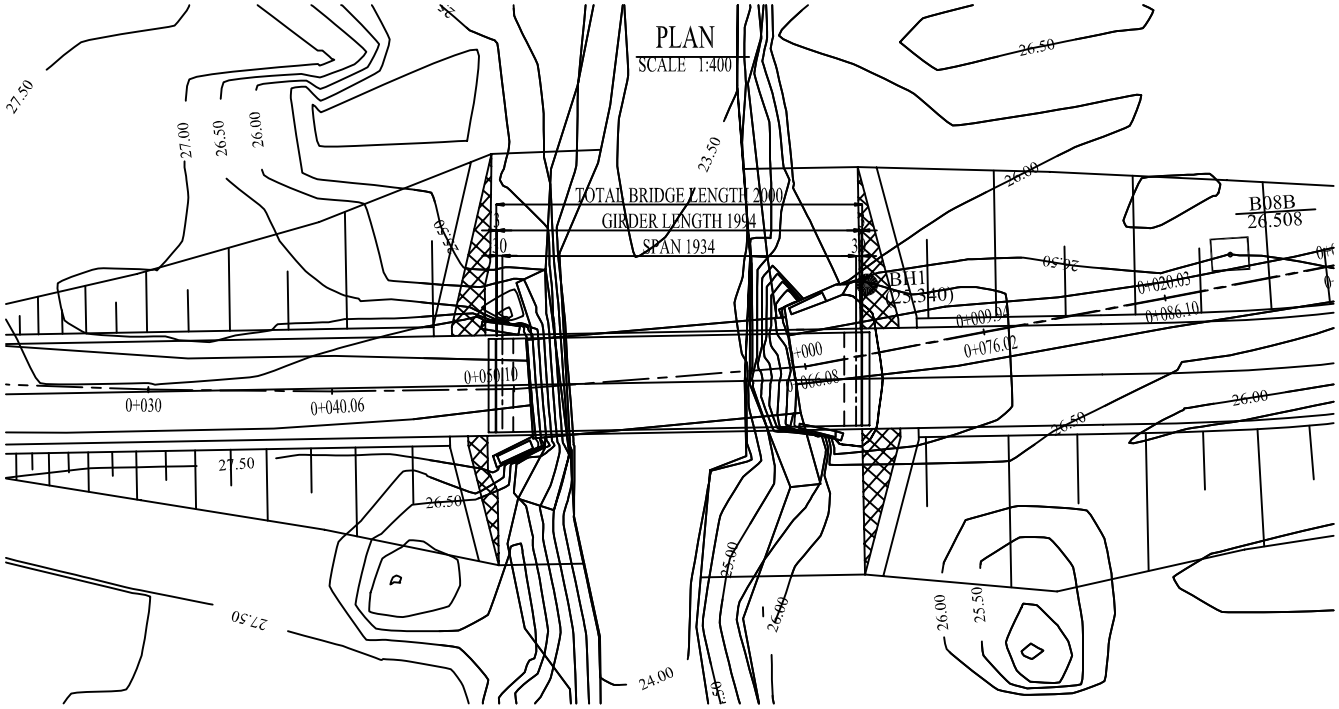

CROSS SECTION FOR METAL GIRDER
SCALE 1:100

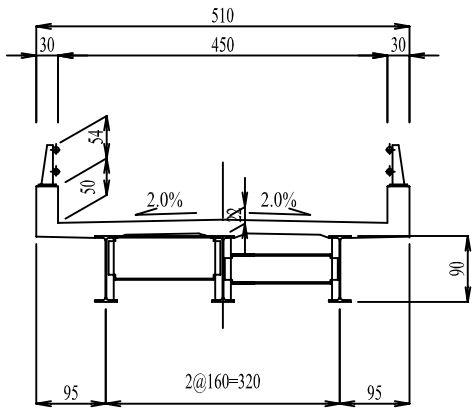

CROSS SECTION FOR GIRDER
SCALE 1:50

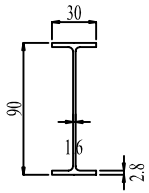

DESIGN CRITERIA

General Condition	
Design Live Load	"D" Lane Load
Design Speed	V=40km/h
Bridge Length(Span Length)	20.00m(19.34m)
Longitudinal Gradient	8.00% , -3.90%
Cross-fall of Carriage way	2.00%
Super Structure Type	H Beam

SECTION	SCALE	DRAWING NO.	SHEET NO.
			4 OF 29
DRAWING TITLE	BR.NO.B10 KOKOBUKA V GENERAL VIEW OF THE SITE		

BR.NO.B10 KOKOBUKA V
GENERAL VIEW OF THE SITE

PLAN

SCALE 1:1000

	X	Y	Z
BM B10A	307207.461	113118.101	32.966
BM B10B	307141.955	133071.349	32.970

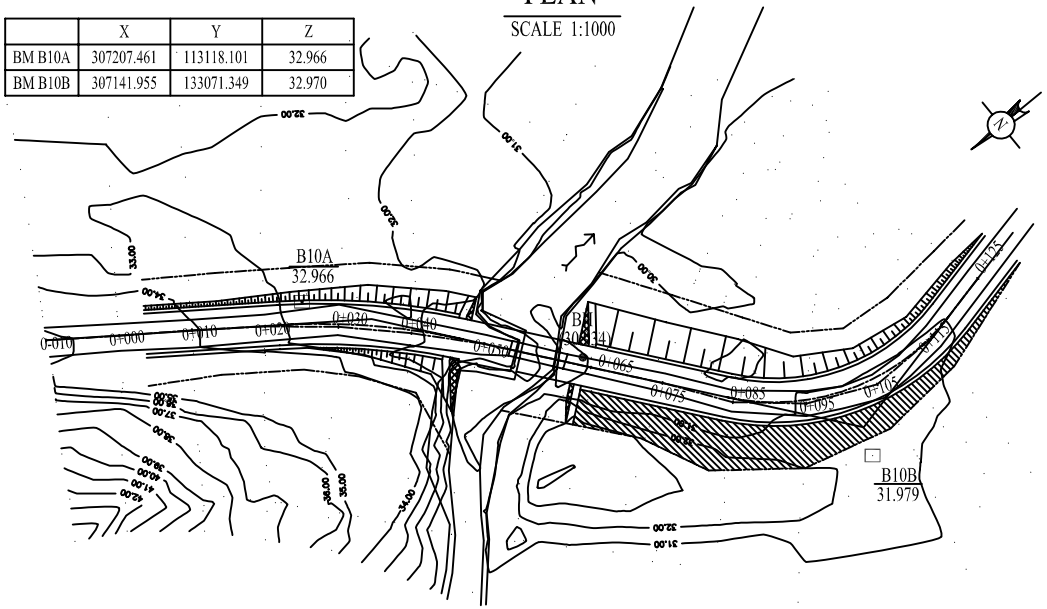

PROFILE

SCALE V=1:500
H=1:1000

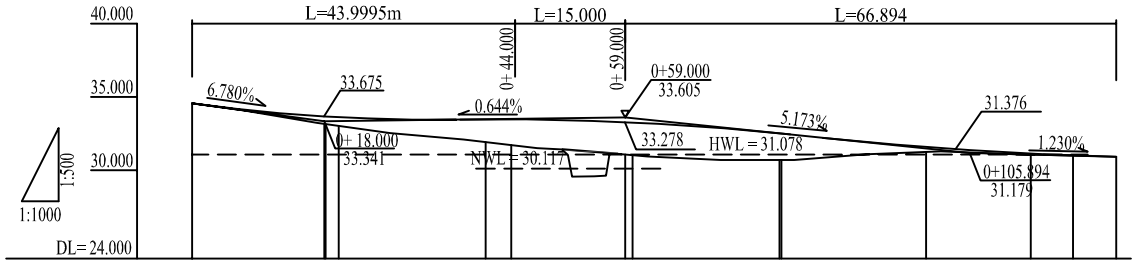

GROUND HEIGHT	34.561	33.156 33.144 33.020	31.926	31.726	31.082 31.034	30.705 30.705	31.256	31.076	31.006	30.933
STATION	NO. 0	+18.000 +18.184 +20.000	+40.000	+43.488	+59.000 +60.000	+80.000 +80.270	+100.000	+114.257	+120.000	+125.894

TYPICAL CROSS SECTION

SCALE 1:250

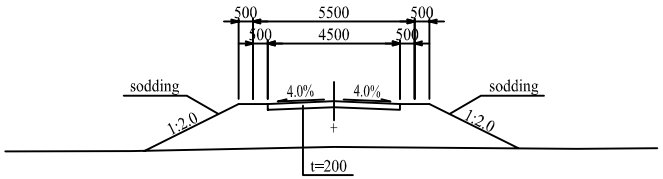

SECTION	SCALE	DRAWING NO.	SHEET NO.
	1/100 ,1/400		5 OF 29
DRAWING TITLE	BR.NO.B10 KOKOBUKA V GENERAL VIEW OF THE BRIDGE		

BR.NO.B10 KOKOBUKA V
GENERAL VIEW OF THE BRIDGE

PROFILE
SCALE 1:400

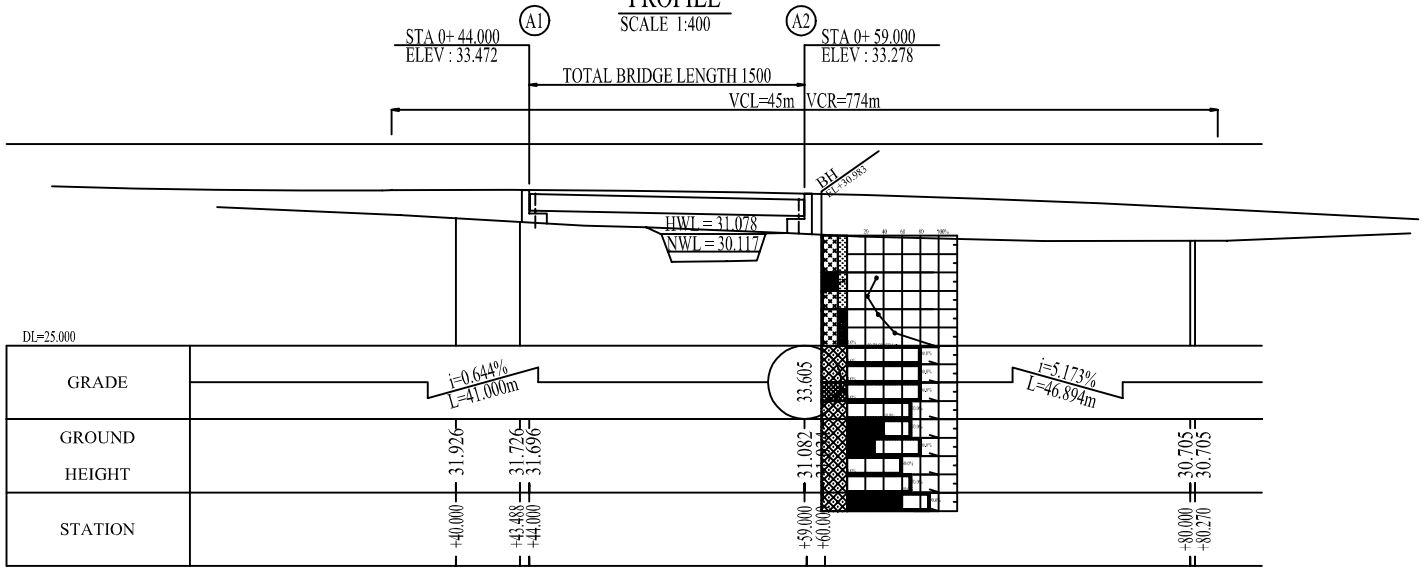

PLAN
SCALE 1:400

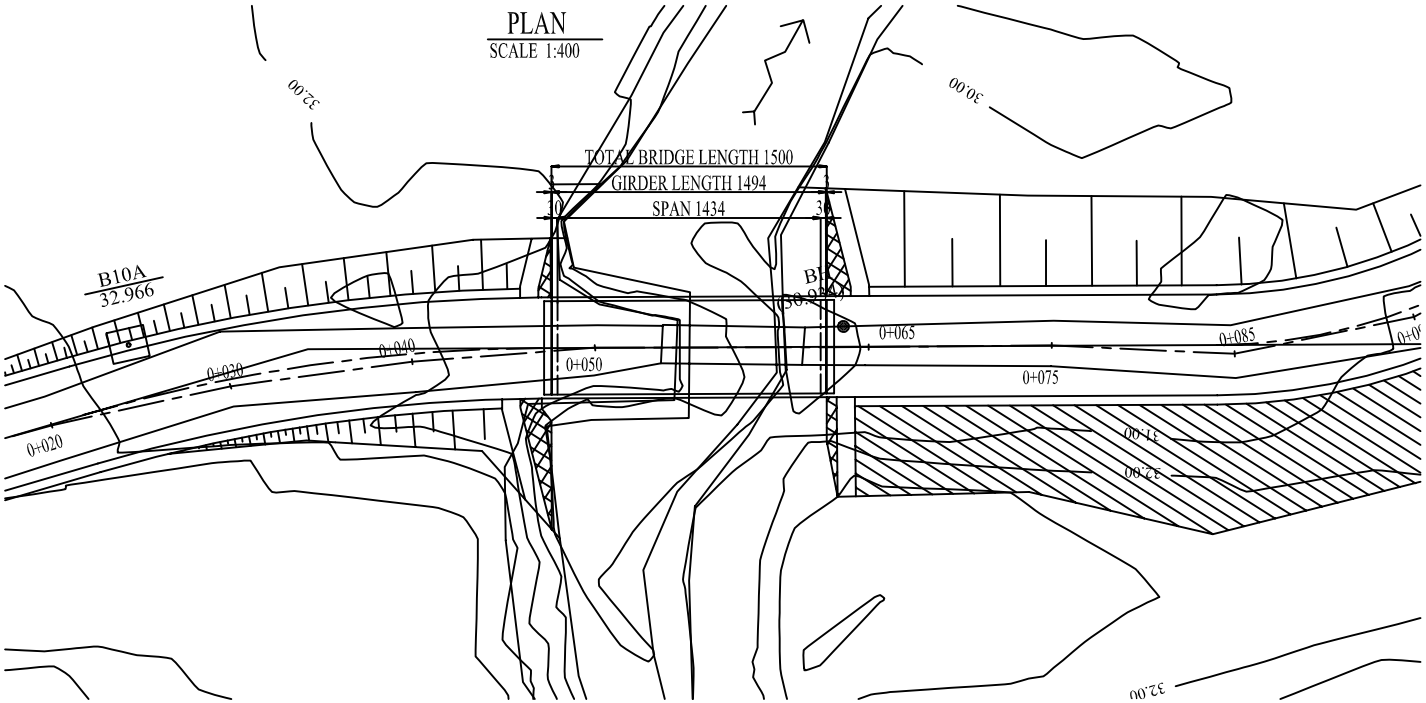

CROSS SECTION FOR METAL GIRDER
SCALE 1:100

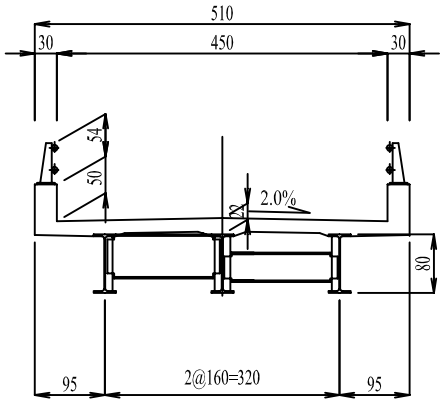

CROSS SECTION FOR GIRDER
SCALE 1:50

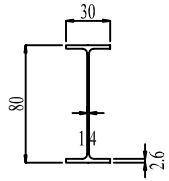

DESIGN CRITERIA

General Condition	
Design Live Load	"D" Lane Load
Design Speed	V=40km/h
Bridge Length(Span Length)	15.00m(14.34m)
Longitudinal Gradient	0.644% , -5.173%
Cross-fall of Carriage way	2.00%
Super Structure Type	H Beam

SECTION	SCALE	DRAWING NO.	SHEET NO.
			6 OF 29
DRAWING TITLE	BR.NO.B17 TAYADUN I GENERAL VIEW OF THE SITE		

BR.NO.B17 TAYADUN II

GENERAL VIEW OF THE SITE

PLAN

SCALE 1:1000

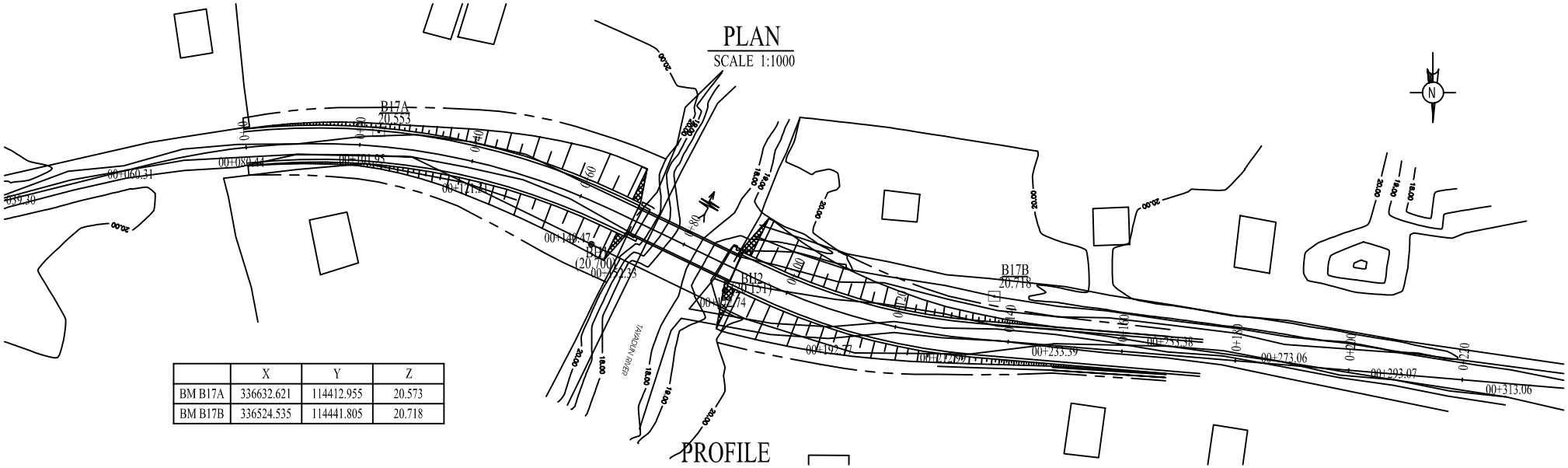

	X	Y	Z
BM B17A	336632.621	114412.955	20.573
BM B17B	336524.535	114441.805	20.718

PROFILE

SCALE V=1:500
H=1:1000

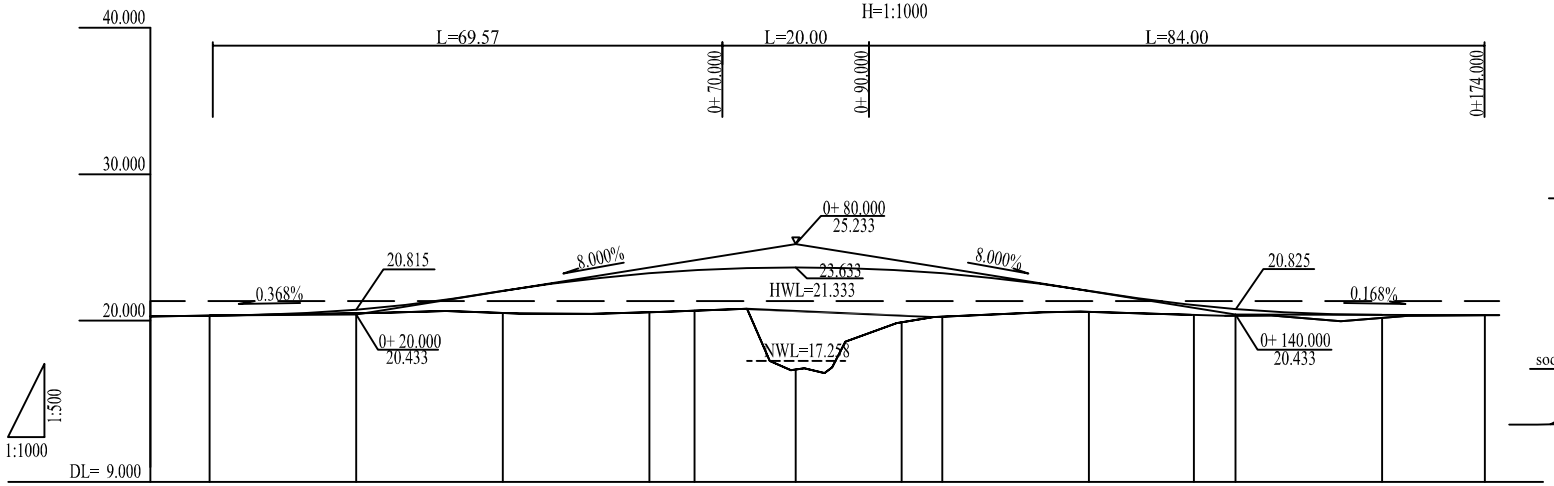

TYPICAL CROSS SECTION

SCALE 1:250

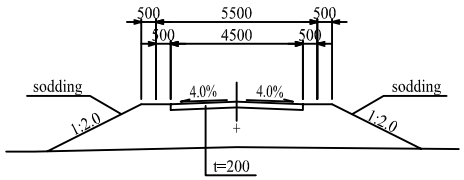

GROUND HEIGHT	20.359	20.511	20.525	20.573	20.677	16.676	19.903	20.279	20.610	20.408	20.351	20.195	20.376
STATION	NO.0	+020.000	+040.000	+060.000	+066.17	+080.000	+094.44	+100.000	+120.000	+134.297	+140.000	+160.000	+174.000

SECTION	SCALE	DRAWING NO.	SHEET NO.
	1/100 ,1/400		7 OF 29
DRAWING TITLE	BR.NO.B17 TAYADUN II GENERAL VIEW OF THE BRIDGE		

BR.NO.B17 TAYADUN II
GENERAL VIEW OF THE BRIDGE

PROFILE
SCALE 1:400

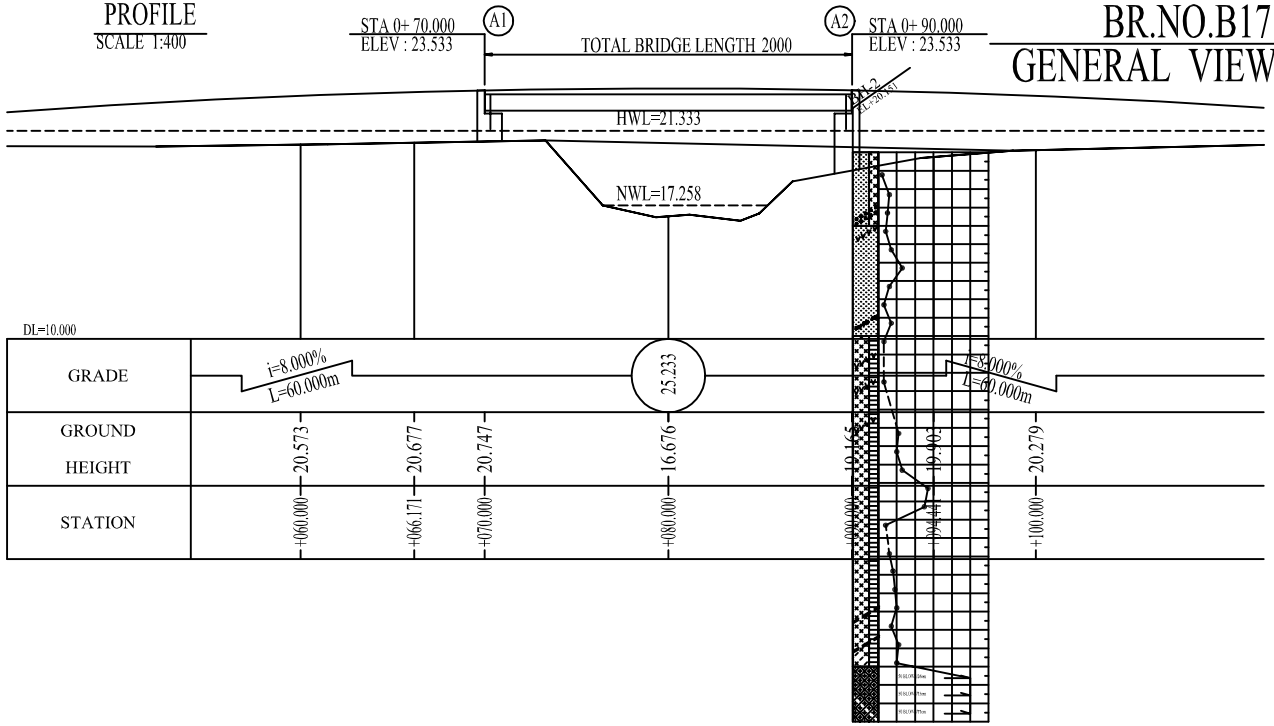

PLAN
SCALE 1:400

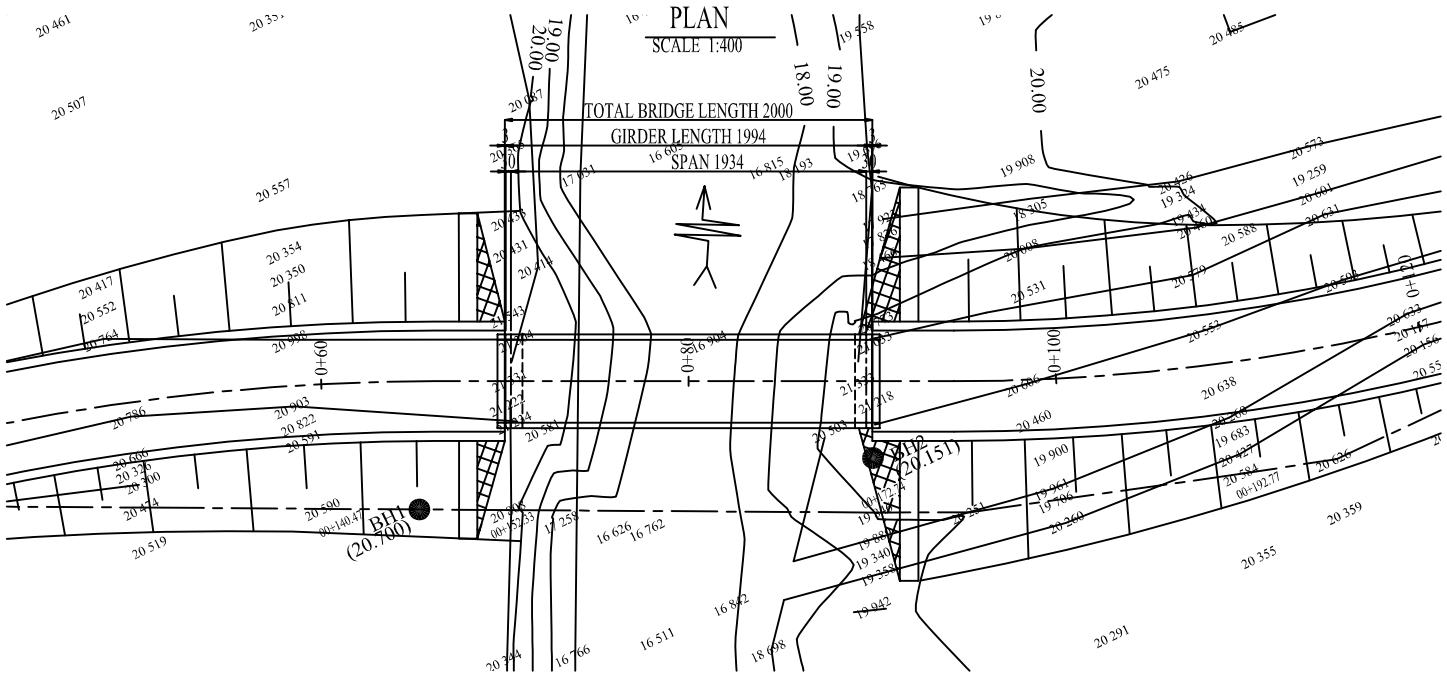

CROSS SECTION FOR METAL GIRDER
SCALE 1:100

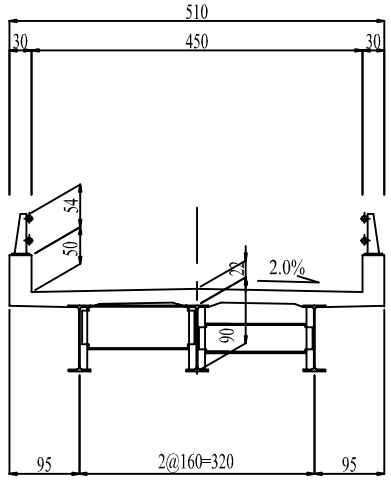

CROSS SECTION FOR GIRDER
SCALE 1:50

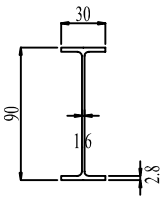

DESIGN CRITERIA

General Condition	
Design Live Load	"D" Lane Load
Design Speed	V=40km/h
Bridge Length(Span Length)	20.00m(19.34m)
Longitudinal Gradient	8.0%,-8.0%
Cross-fall of Carriage way	2.00%
Super Structure Type	H Beam

SECTION	SCALE	DRAWING NO.	SHEET NO.
			8 OF 29
DRAWING TITLE	BR.NO.B18 TAYADUN III GENERAL VIEW OF THE SITE		

BR.NO.B18 TAYADUN III
GENERAL VIEW OF THE SITE

PLAN
SCALE 1:1000

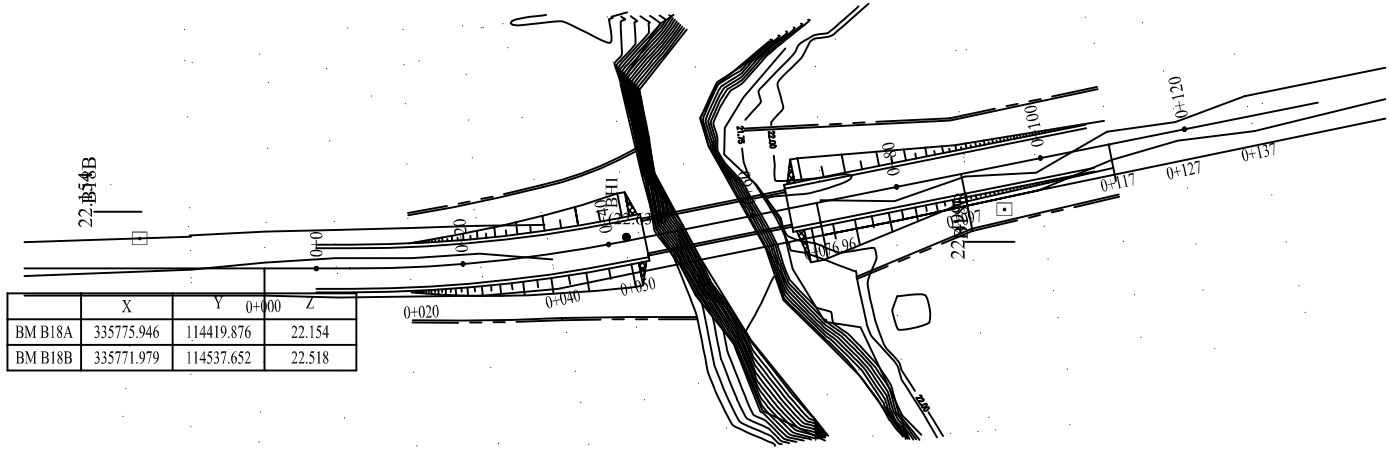

	X	Y	Z
BM B18A	335775.946	114419.876	22.154
BM B18B	335771.979	114537.652	22.518

TYPICAL CROSS SECTION
SCALE 1:250

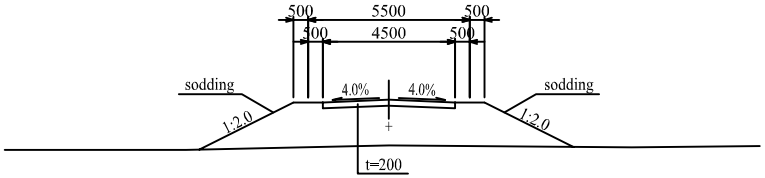

PROFILE
SCALE V=1:500

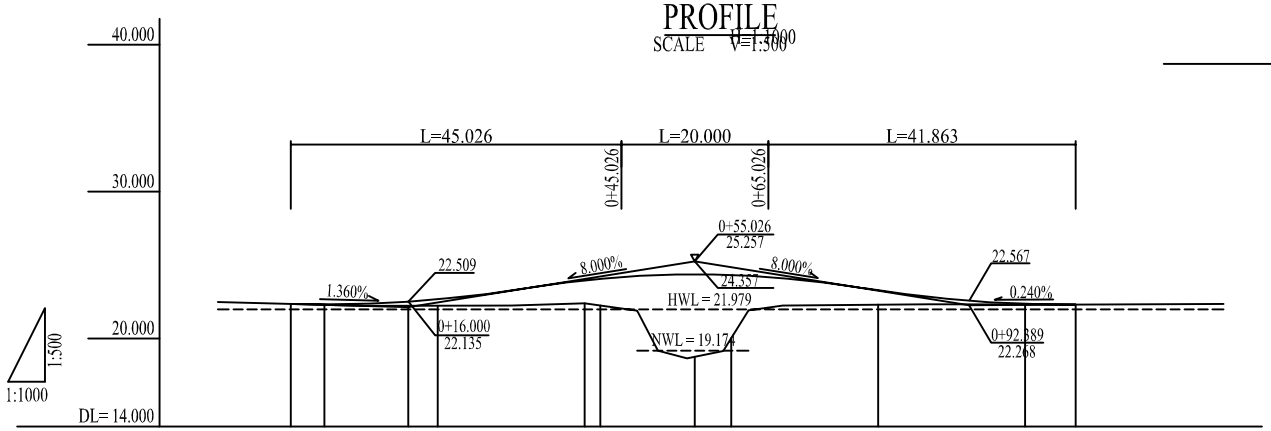

GROUND HEIGHT	22.353	22.290	22.221	22.224	22.400	22.247	18.743	20.040	22.295	22.310	22.303
STATION	No. 0	+004.563	+016.000	+020.000	+040.000	+042.148	+055.026	+060.000	+080.000	+100.000	+106.889

SECTION	SCALE	DRAWING NO.	SHEET NO.
	1/100 ,1/400		9 OF 29
DRAWING TITLE	BR.NO.B18 TAYADUN III GENERAL VIEW OF THE BRIDGE		

BR.NO.B18 TAYADUN III
GENERAL VIEW OF THE BRIDGE

PROFILE
SCALE 1:400

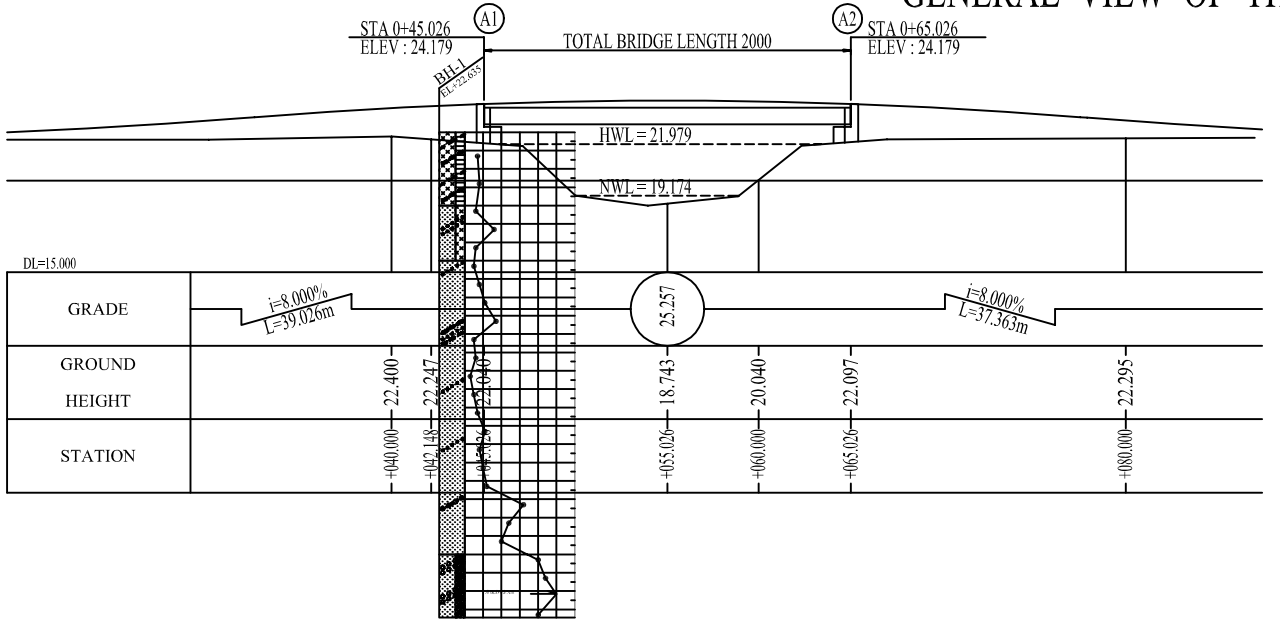

PLAN
SCALE 1:400

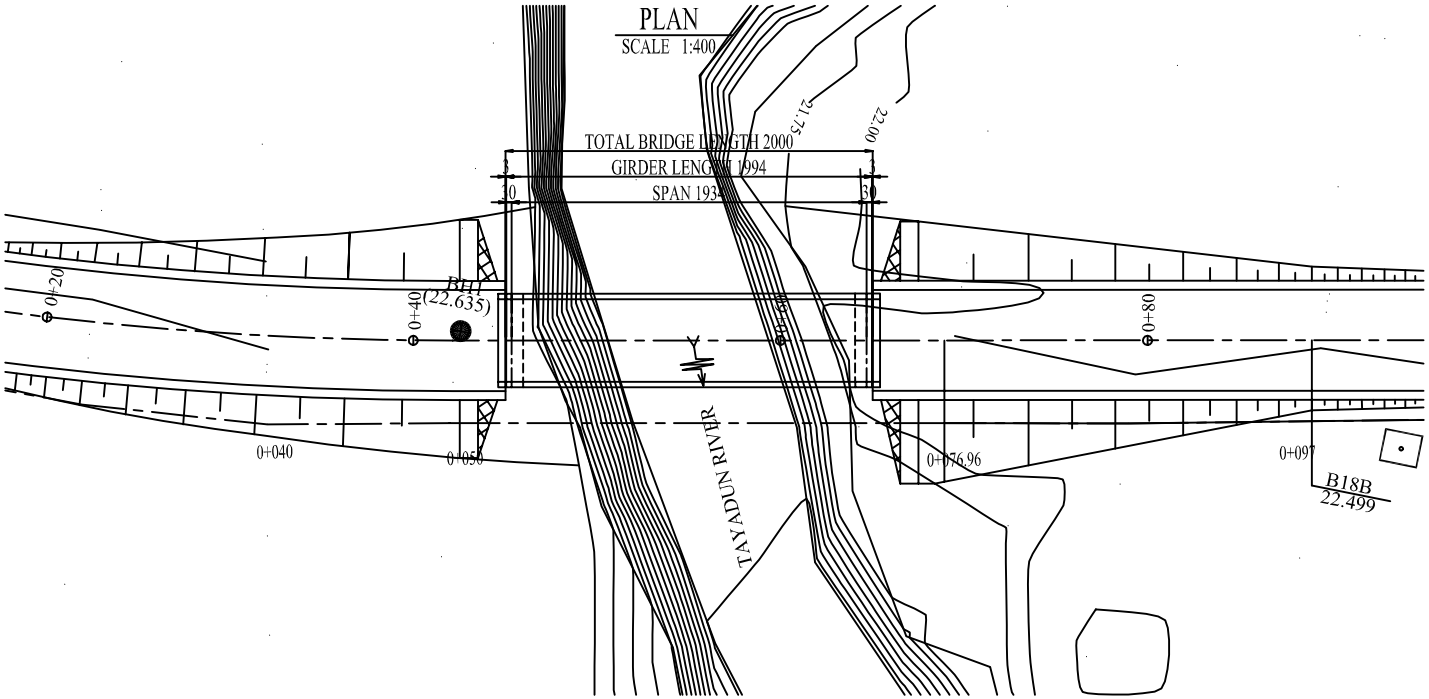

CROSS SECTION FOR METAL GIRDER
SCALE 1:100

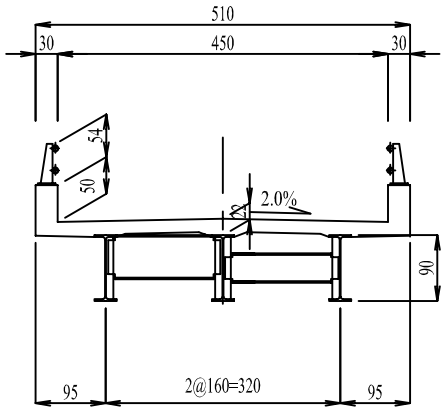

CROSS SECTION FOR GIRDER
SCALE 1:50

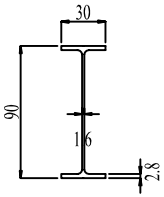

DESIGN CRITERIA

General Condition	
Design Live Load	"D" Lane Load
Design Speed	V=40km/h
Bridge Length(Span Length)	20.00m(19.34m)
Longitudinal Gradient	8.0% , -8.0%
Cross-fall of Carriage way	2.00%
Super Structure Type	H Beam

SECTION	SCALE	DRAWING NO.	SHEET NO.
			10 OF 29
DRAWING TITLE	BR.NO.B19 BONOBOGU I GENERAL VIEW OF THE SITE		

BR.NO.B19 BONOBOGU I

GENERAL VIEW OF THE SITE

PLAN

SCALE 1:1000

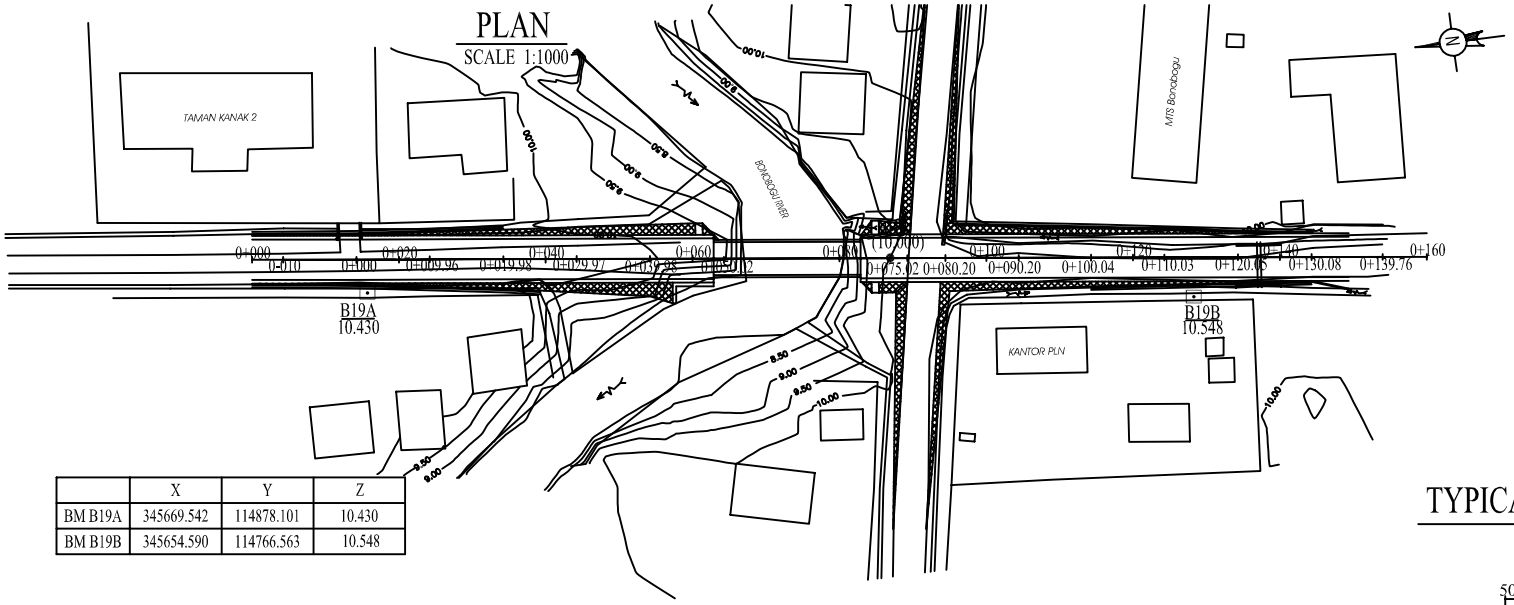

	X	Y	Z
BM B19A	345669.542	114878.101	10.430
BM B19B	345654.590	114766.563	10.548

TYPICAL CROSS SECTION

SCALE 1:250

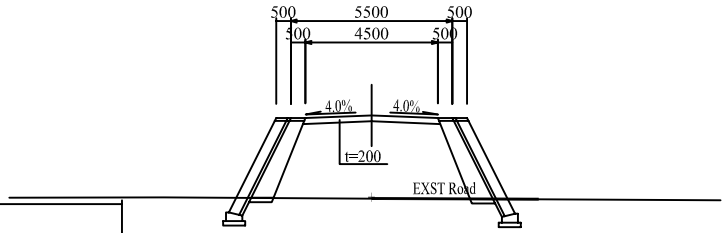

PROFILE

SCALE V=1:500
H=1:1000

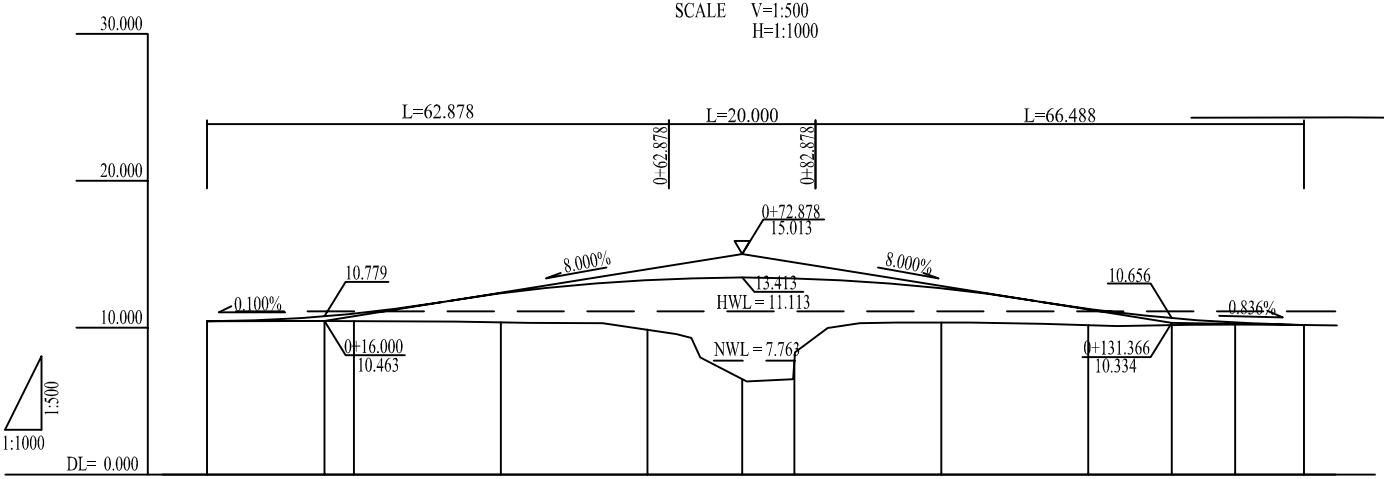

GROUND HEIGHT	10.460	10.456	10.450	10.362	9.861	6.493	7.770	10.347	10.172	10.175	10.215	10.183
STATION	NO.0	+016.000	+020.000	+040.000	+060.000	+072.878	+080.000	+100.000	+120.000	+131.366	+140.000	+149.366

SECTION	SCALE	DRAWING NO.	SHEET NO.
	1/100 ,1/400		11 OF 29
DRAWING TITLE	BR.NO.B19 BONOBOGU I GENERAL VIEW OF THE BRIDGE		

BR.NO.B19 BONOBOGU I
GENERAL VIEW OF THE BRIDGE

PROFILE
SCALE 1:400

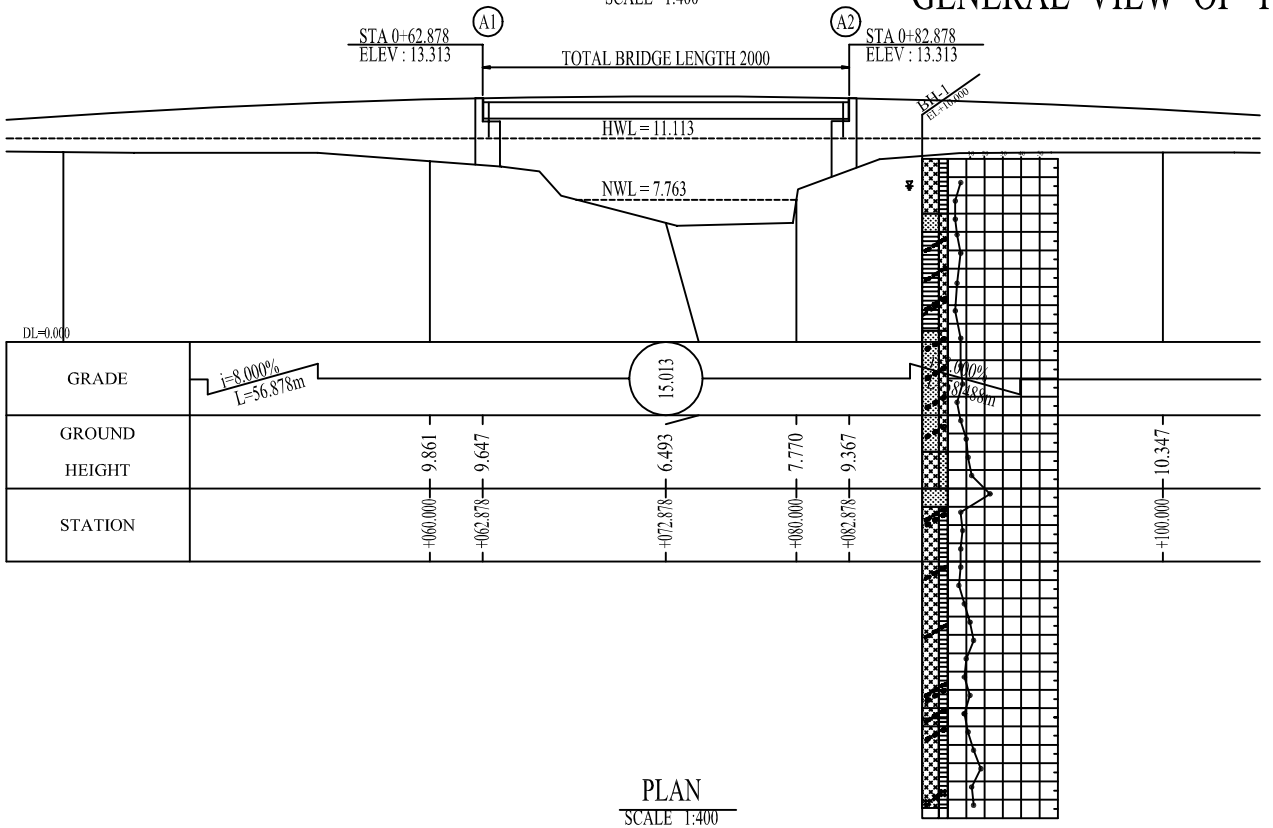

CROSS SECTION FOR METAL GIRDER
SCALE 1:100

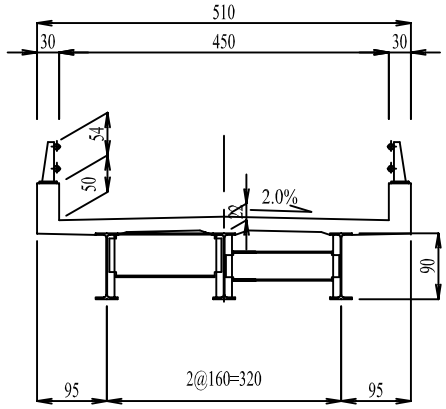

CROSS SECTION FOR GIRDER
SCALE 1:50

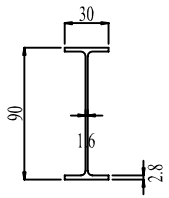

PLAN
SCALE 1:400

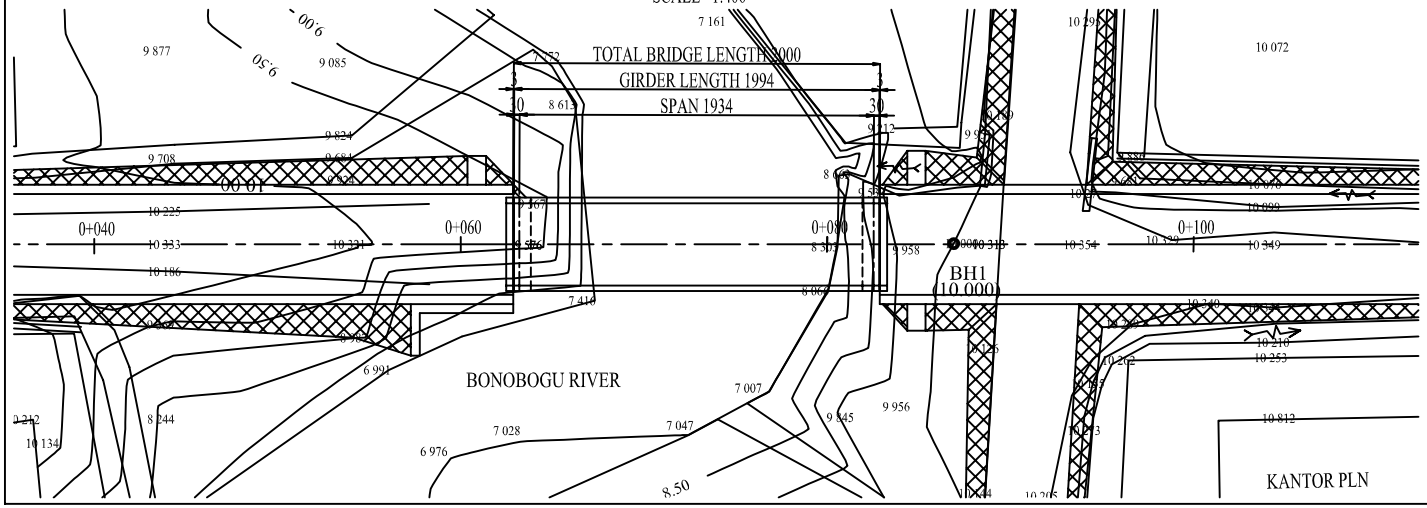

DESIGN CRITERIA

General Condition	
Design Live Load	"D" Lane Load
Design Speed	V=40km/h
Bridge Length(Span Length)	20.00m(19.34m)
Longitudinal Gradient	8.0% , -8.0%
Cross-fall of Carriage way	2.00%
Super Structure Type	H Beam

SECTION	SCALE	DRAWING NO.	SHEET NO.
			12 OF 29
DRAWING TITLE	BR.NO.B4 PUJIMULYO I GENERAL VIEW OF THE SITE		

BR.NO.B4 PUJIMULYO I

GENERAL VIEW OF THE SITE

PLAN

SCALE 1:1000

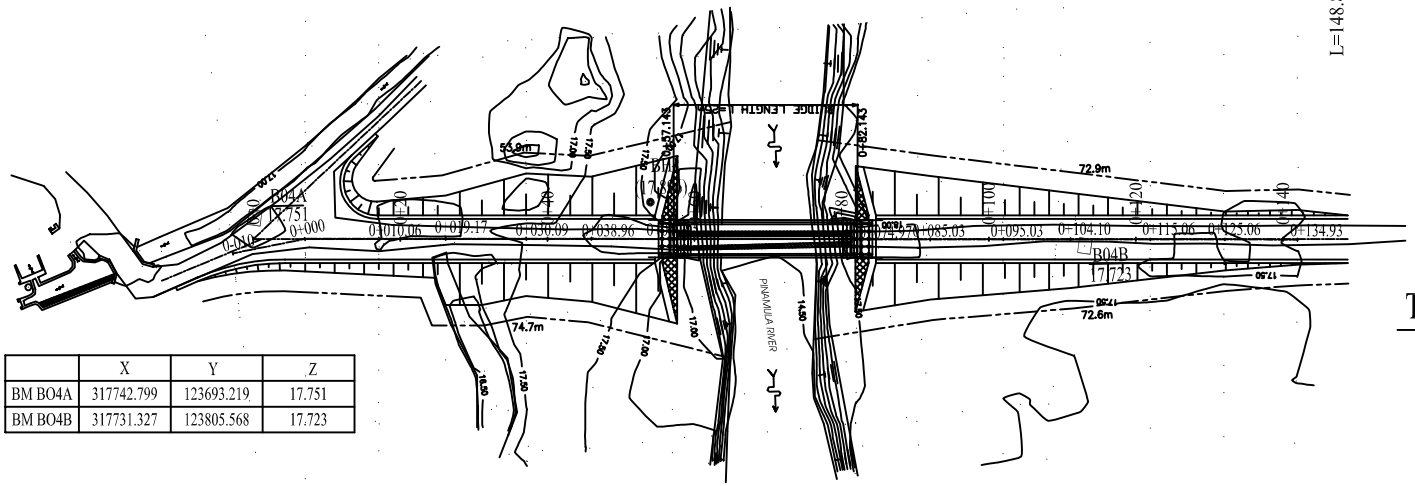

	X	Y	Z
BM BO4A	317742.799	123693.219	17.751
BM BO4B	317731.327	123805.568	17.723

TYPICAL CROSS SECTION

SCALE 1:250

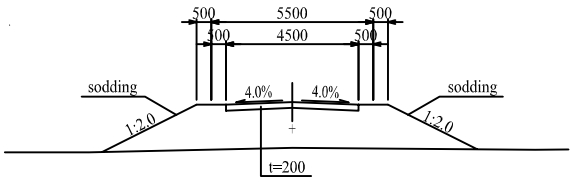

PROFILE

SCALE V=1:500
H=1:1000

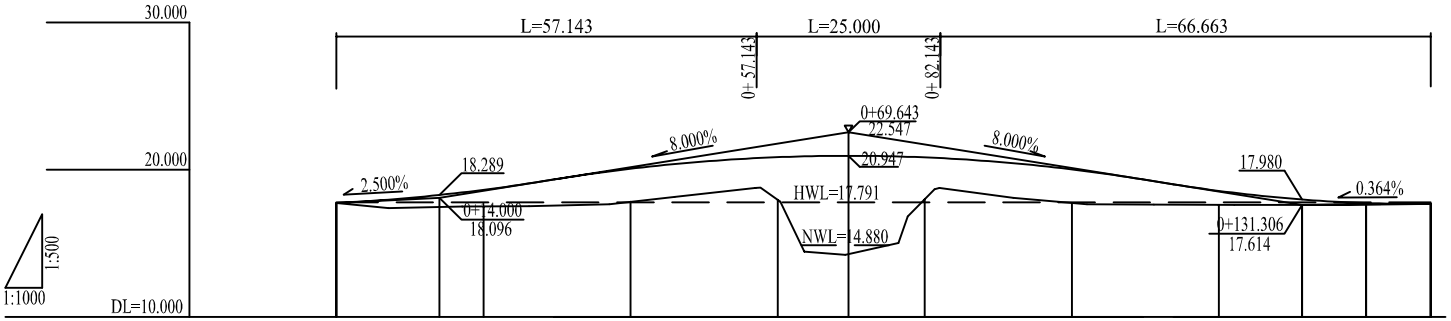

GROUND HEIGHT	17.746	17.470	17.512	17.822	17.963	14.258	17.995	17.750	17.616	17.613	17.645	17.677
STATION	NO.0	+014.000	+020.000	+040.000	+060.000	+069.643	+080.000	+100.000	+120.000	+131.306	+140.000	+148.806

BR.NO.B4 PUJIMULYO I
GENERAL VIEW OF THE BRIDGE

SECTION	SCALE	DRAWING NO.	SHEET NO.
	1/100 ,1/200 ,1/400		13 OF 29
DRAWING TITLE	BR.NO.B4 PUJIMULYO I GENERAL VIEW OF THE BRIDGE		

PROFILE
SCALE 1:400

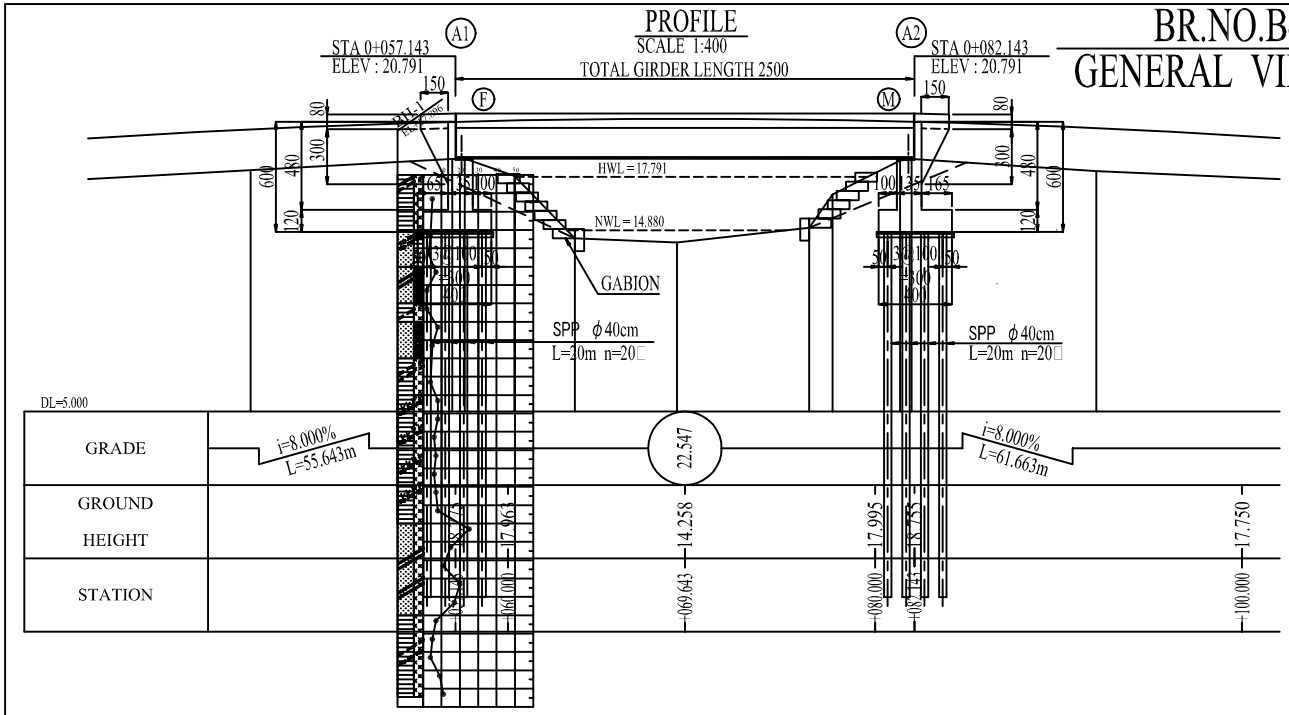

CROSS SECTION FOR PC GIRDER
SCALE 1:100

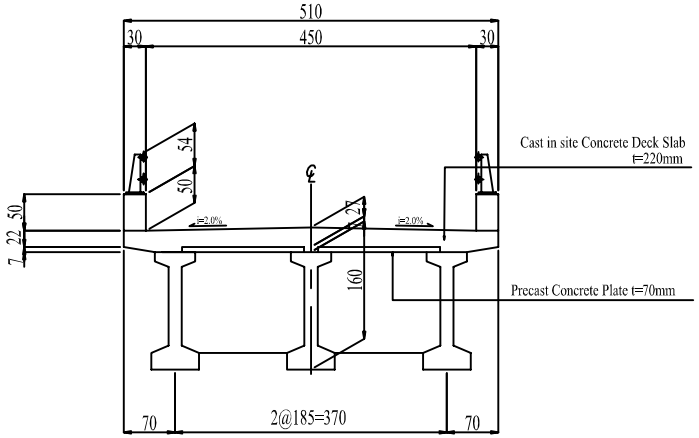

PLAN
SCALE 1:400

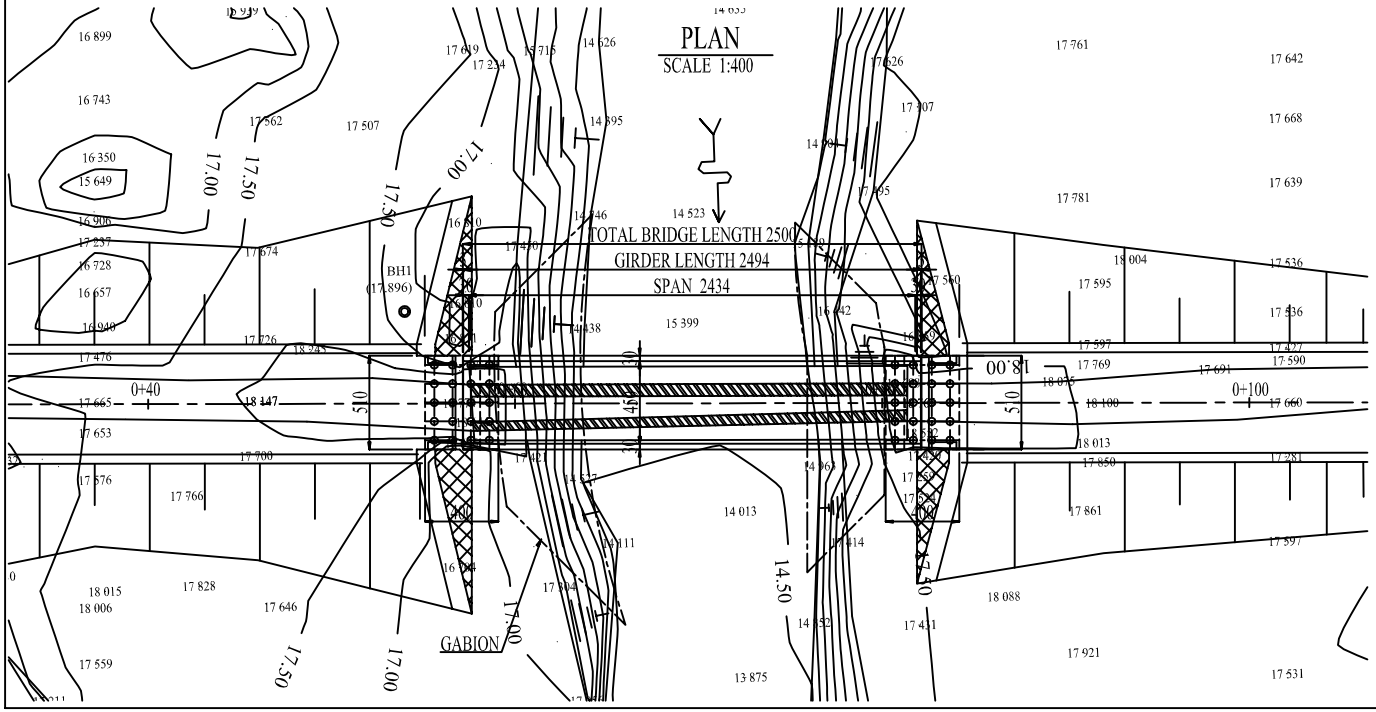

DESIGN CRITERIA

General Condition		
Design Live Load		"D" Lane Load
Design Speed		V=40km/h
Bridge Length(Span Length)		25.00m(24.34m)
Longitudinal Gradient		8.0%, -8.0%
Cross-fall of Carriage way		2.00%
Super Structure Type		Prestressed Concrete
Sub Structure Type		Reinforced Concrete
Foundation Type		Steel Pipe Pile φ40cm
Material Strength		
Super Structure Type	Girder	$\sigma 28=34.6N/mm^2$
	Cross Beam	$\sigma 28=29N/mm^2$
	Slab	$\sigma 28=29N/mm^2$
Surface	Curb,Handrail	$\sigma 28=21N/mm^2$
Sub Structure Type		$\sigma 28=21N/mm^2$
Reinforcing Steel		SD235(py=235N/mm²)

SECTION	SCALE	DRAWING NO.	SHEET NO.
			14 OF 29
DRAWING TITLE	BR.NO.B6 KOKOBUKA I GENERAL VIEW OF THE SITE		

BR.NO.B6 KOKOBUKA I
GENERAL VIEW OF THE SITE

PLAN
SCALE 1:1000

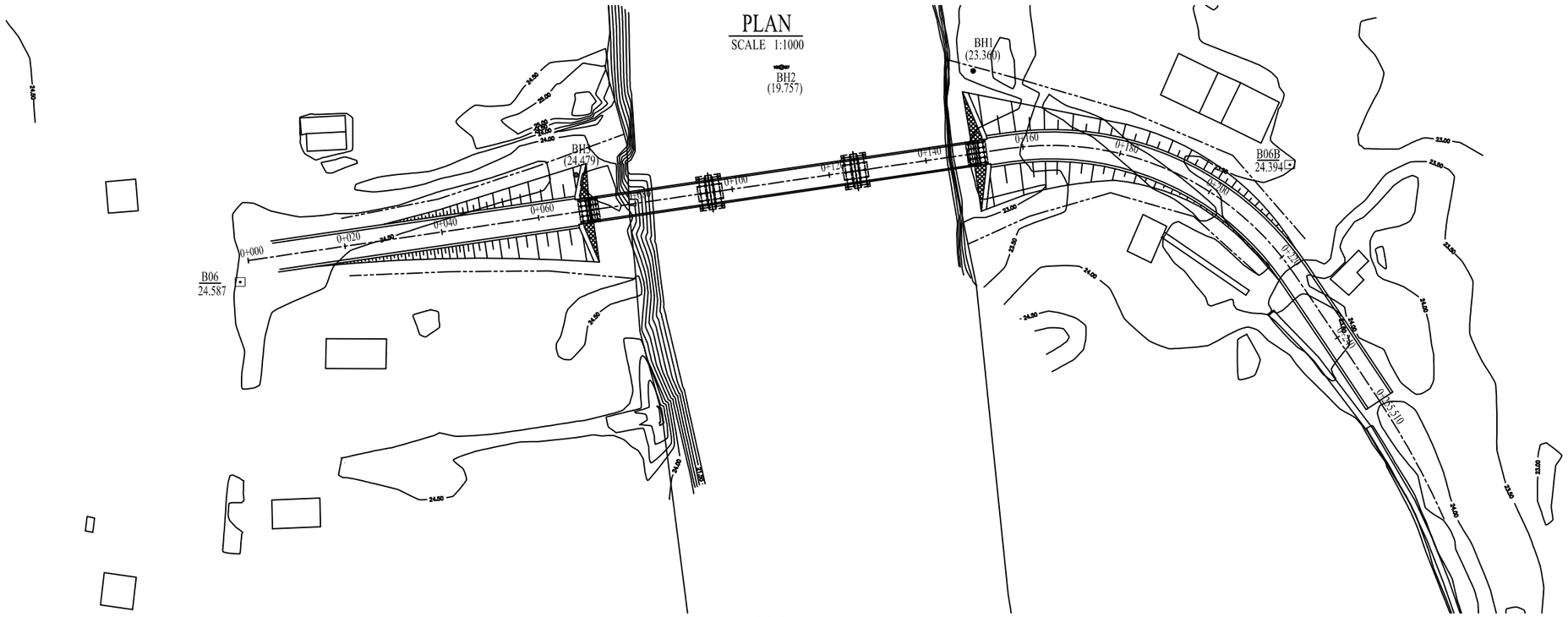

	X	Y	Z
BM BO6	307801.585	113996.547	24.587
BM B06A	307789.772	114056.772	24.387
BM B06B	308016.077	114020.507	24.366

PROFILE
SCALE V=1:500
H=1:1000

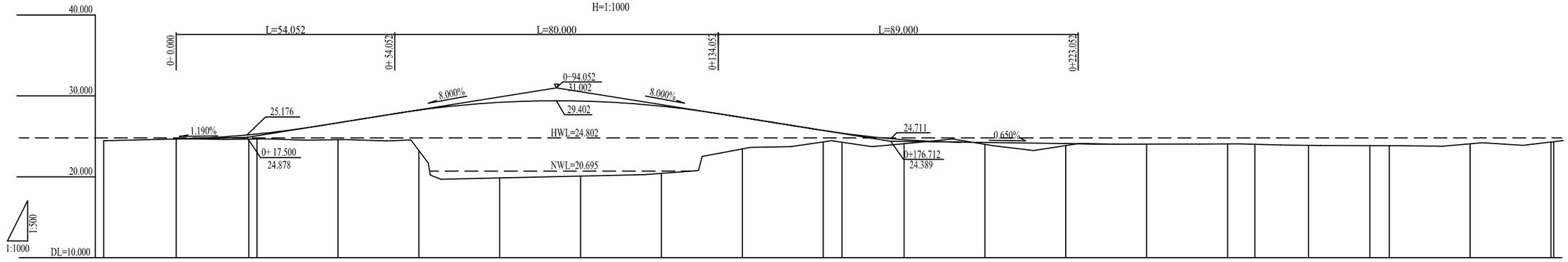

STATION	GROUND HEIGHT
017.948	24.457
NO.0	24.670
+017.500	24.661
+020.000	24.675
+040.000	24.595
+060.000	23.256
+080.000	19.856
+094.052	20.017
+100.000	20.084
+120.000	20.423
+140.000	23.452
+160.000	24.309
+164.654	24.268
+176.712	23.940
+180.000	24.095
+194.212	24.488
+200.000	24.018
+220.000	23.853
+240.000	24.038
+260.000	24.063
+266.765	24.023
+280.000	23.891
+295.167	23.860
+300.000	23.856
+320.000	24.075
+340.000 +340.678	24.311 24.353

TYPICAL CROSS SECTION
SCALE 1:250

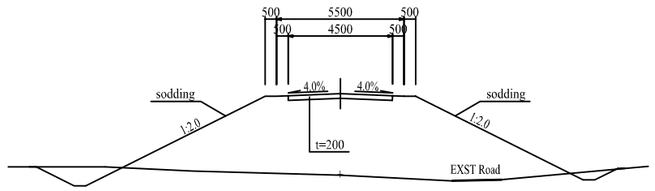

SECTION	SCALE	DRAWING NO.	SHEET NO.
	1/100 ,1/400		15 OF 29
DRAWING TITLE	BR.NO.B6 KOKOBUKA I GENERAL VIEW OF THE BRIDGE		

BR.NO.B6 KOKOBUKA I
GENERAL VIEW OF THE BRIDGE

PROFILE
SCALE□1:400

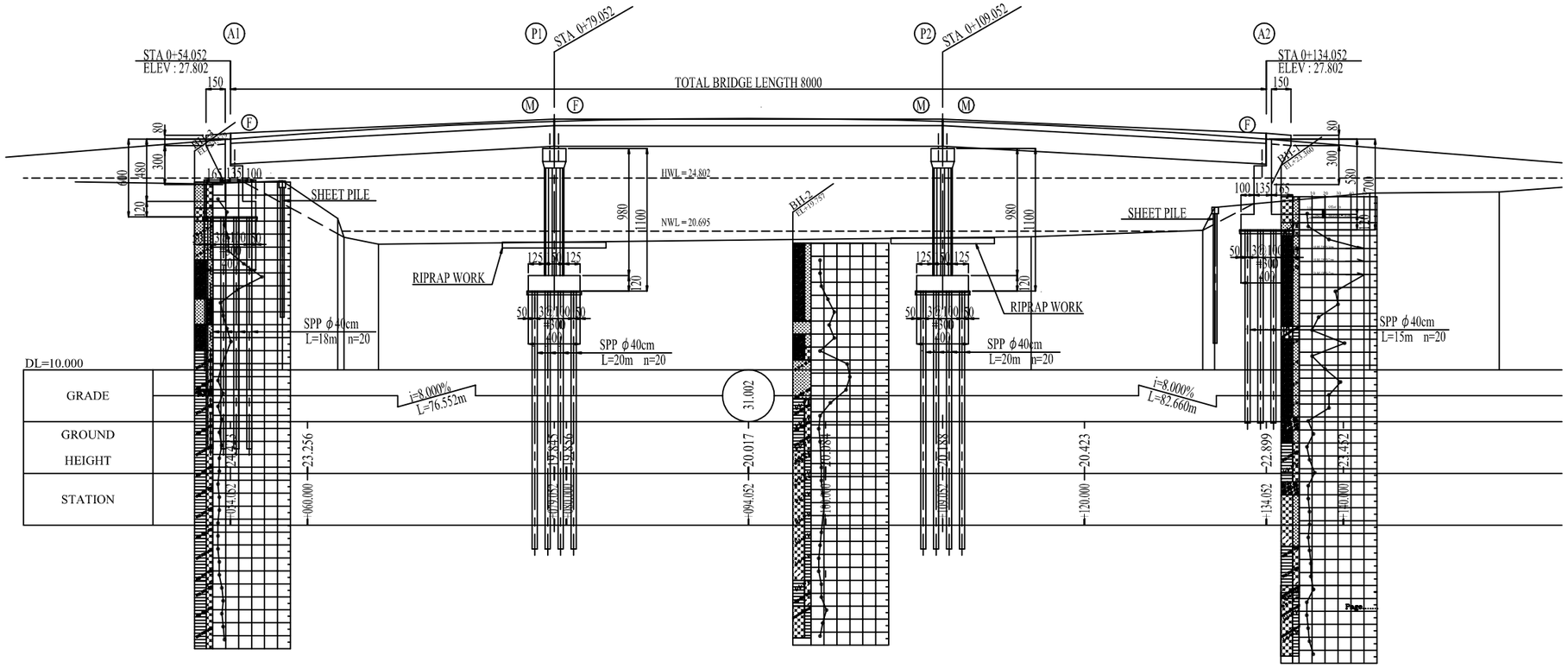

CROSS SECTION FOR PC GIRDER
SCALE□1:100

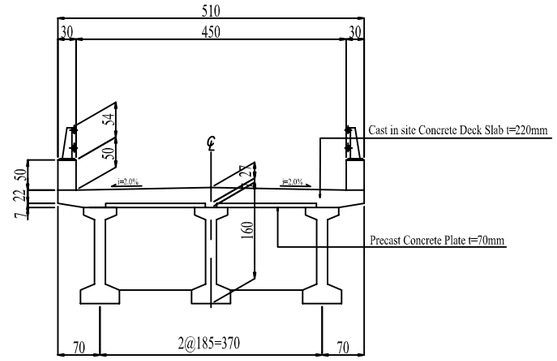

PLAN
SCALE□1:400

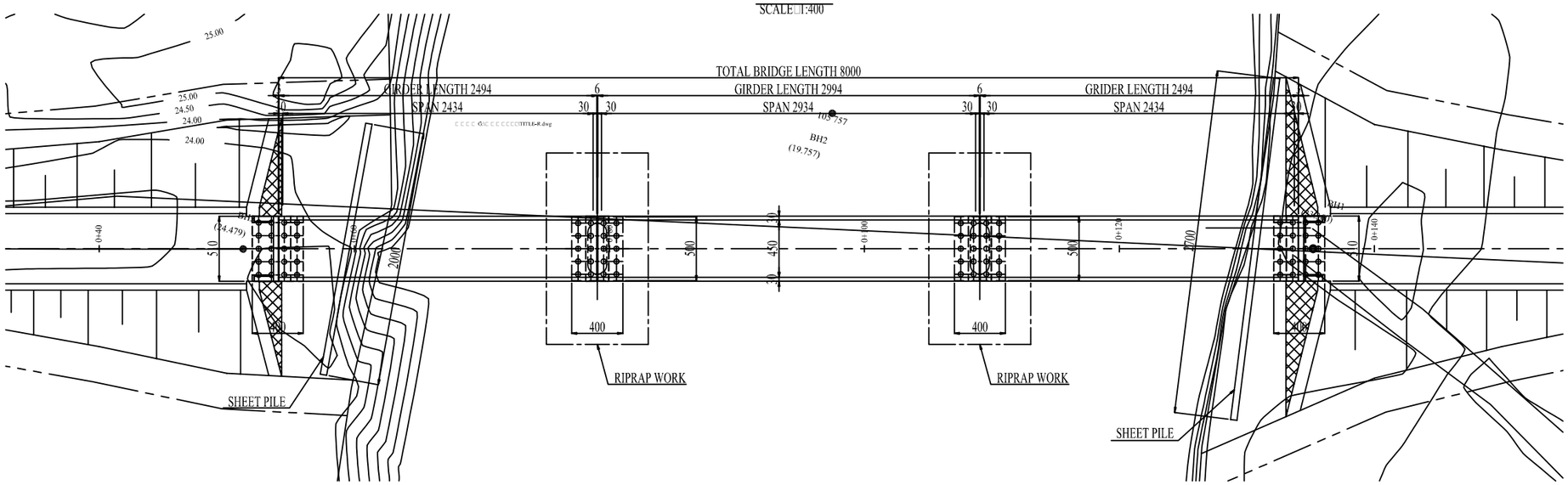

DESIGN CRITERIA

General Condition		
Design Live Load	"D" Lane Load	
Design Speed	V=40km/h	
Bridge Length(Span Length)	80.00m(24.34m+29.34m+24.34m)	
Longitudinal Gradient	8.0%, -8.0%	
Cross-fall of Carriage way	2.00%	
Super Structure Type	Prestressed Concrete	
Sub Structure Type	Reinforced Concrete	
Foundation Type	Steel Pipe Pile φ40cm	
Material Strength		
Super Structure Type	Girder	σ28=34.6N/mm²
	Cross Beam	σ28=29N/mm²
	Slab	σ28=29N/mm²
Surface	Curb,Handrail	σ28=21N/mm²
Sub Structure Type		σ28=21N/mm²
Reinforcing Steel		SD235(py=235N/mm²)

SECTION	SCALE	DRAWING NO.	SHEET NO.
			16 OF 29
DRAWING TITLE	BR.NO.B11 KOKOBUKA VI GENERAL VIEW OF THE SITE		

BR.NO.B11 KOKOBUKA VI

GENERAL VIEW OF THE SITE

	X	Y	Z
BM B11A	307294.312	114848.576	26.049
BM B11B	307348.538	114813.303	25.608

PLAN

SCALE 1:1000

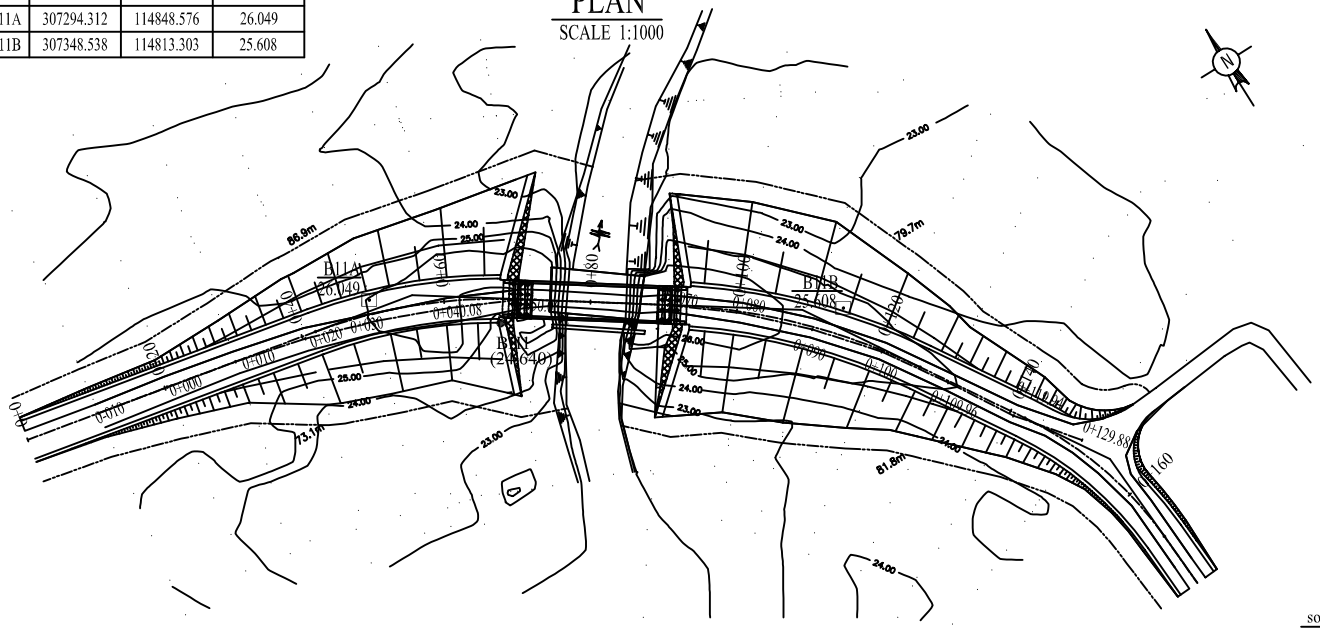

TYPICAL CROSS SECTION

SCALE 1:250

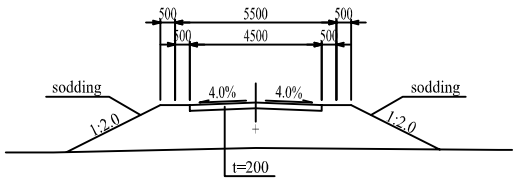

PROFILE

SCALE V=1:500
H=1:1000

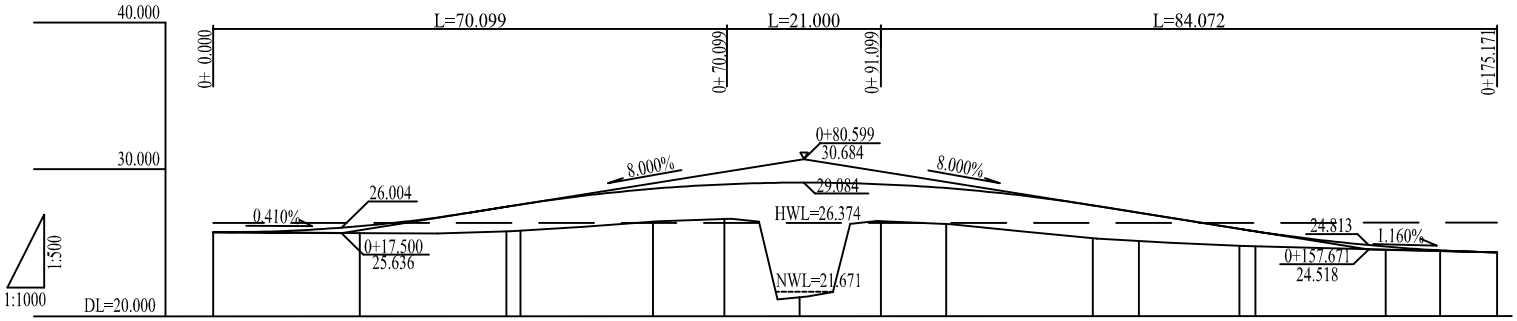

GROUND HEIGHT	25.708	25.655	25.644	25.762	25.812	26.409	26.602	21.249	21.277	26.444	26.265	25.295	25.104	24.766	24.733	24.537	24.507	24.413	24.315
STATION	NO.0	+017.500	+020.000	+040.000	+041.929	+060.000	+069.765	+080.000	+080.599	+091.118	+100.000	+120.000	+126.289	+140.000	+142.183	+157.671	+160.000	+167.402	+175.171

SECTION	SCALE	DRAWING NO.	SHEET NO.
	1/100 ,1/400		17 OF 29
DRAWING TITLE	BR.NO.B11 KOKOBUKA VI GENERAL VIEW OF THE BRIDGE		

BR.NO.B11 KOKOBUKA VI
GENERAL VIEW OF THE BRIDGE

PROFILE
SCALE 1:400

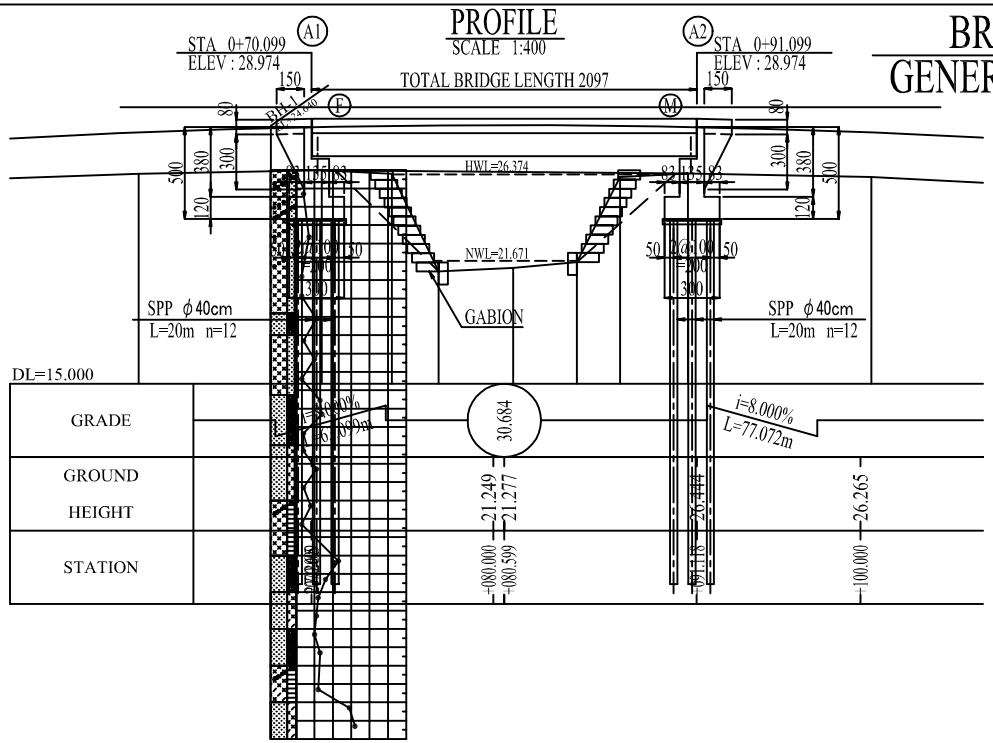

PLAN
SCALE 1:400

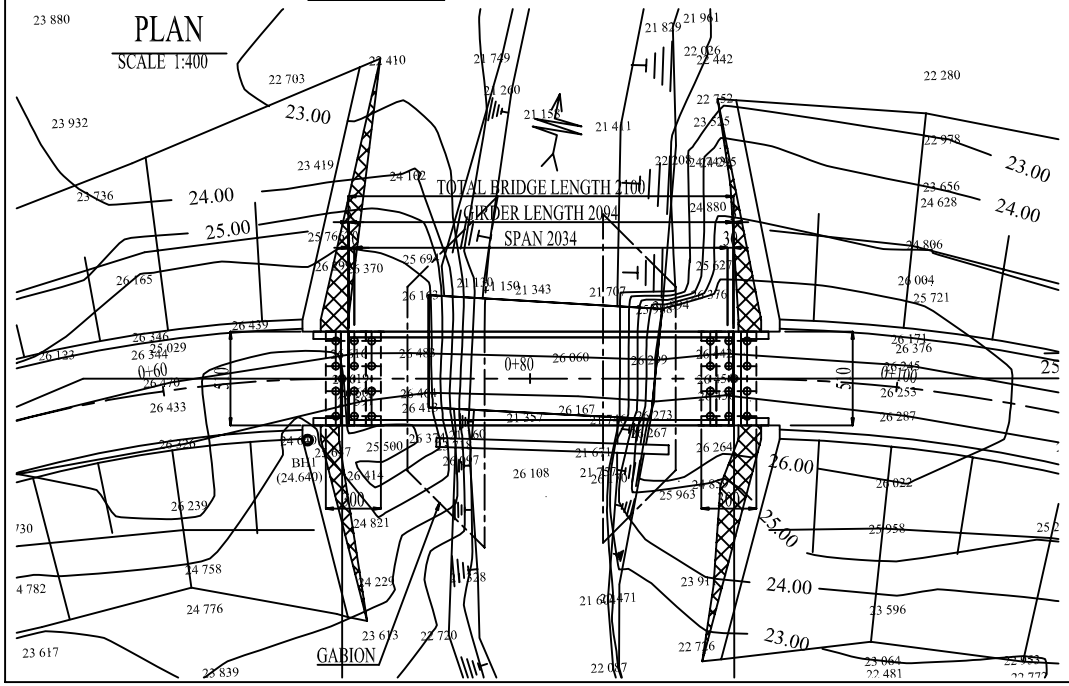

CROSS SECTION FOR RC GIRDER
SCALE 1:100

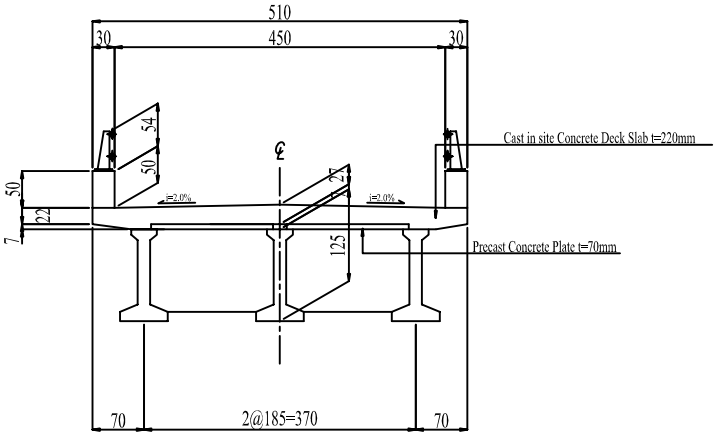

DESIGN CRITERIA

General Condition		
Design Live Load	"D" Lane Load	
Design Speed	V=40km/h	
Bridge Length(Span Length)	21.00m(20.34m)	
Longitudinal Gradient	8.0%, -8.0%	
Cross-fall of Carriage way	2.00%	
Super Structure Type	Prestressed Concrete	
Sub Structure Type	Abutment	Reinforced Concrete
Foundation Type	Abutment	Steel Pipe Pile ϕ40cm
Material Strength		
Super Structure Type	Girder	$\sigma 28=34.6N/mm^2$
	Cross Beam	$\sigma 28=29N/mm^2$
	Slab	$\sigma 28=29N/mm^2$
Surface	Curb,Handrail	$\sigma 28=21N/mm^2$
Sub Structure Type		$\sigma 28=21N/mm^2$
Reinforcing Steel		SD235(py=235N/mm²)

BRIDGE	SCALE	DRAWING NO	BRIDGE NO
			BOF 70
DRAWING TITLE :	BR.NO.B12 KOKOBUKA VII GENERAL VIEW OF THE SITE		

BR.NO.B12 KOKOBUKA VII
GENERAL VIEW OF THE SITE

PLAN
SCALE 1:1000

	X	Y	Z
BM B12	307820.743	317735.303	21.445
BM B12A	307887.550	317810.960	21.929
BM B12B	307867.103	317886.397	21.958

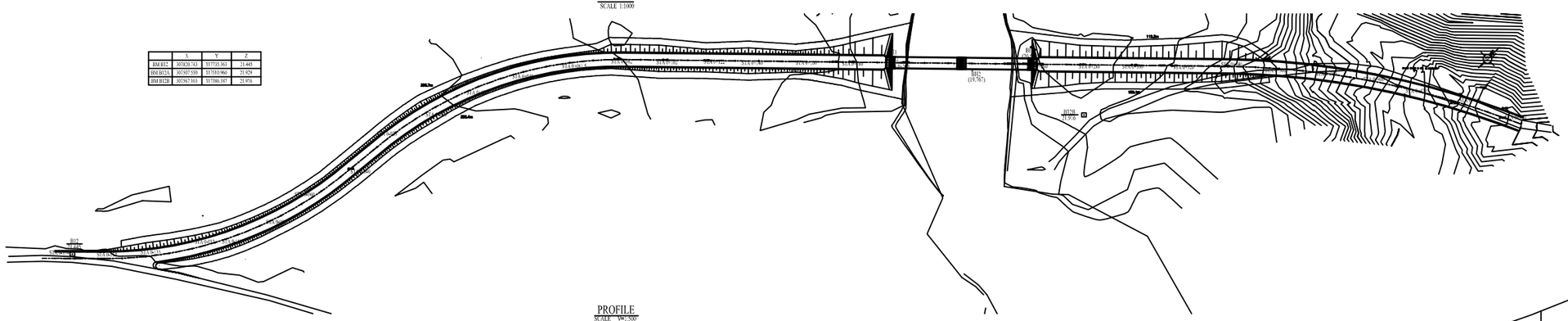

SECTION	SCALE	DRAWING NO.	SHEET NO.
	1/100 ,1/400		19 OF 29
DRAWING TITLE	BR.NO.B12 KOKOBUKA VII GENERAL VIEW OF THE BRIDGE		

BR.NO.B12 KOKOBUKA VII
GENERAL VIEW OF THE BRIDGE

PROFILE
SCALE 1:400

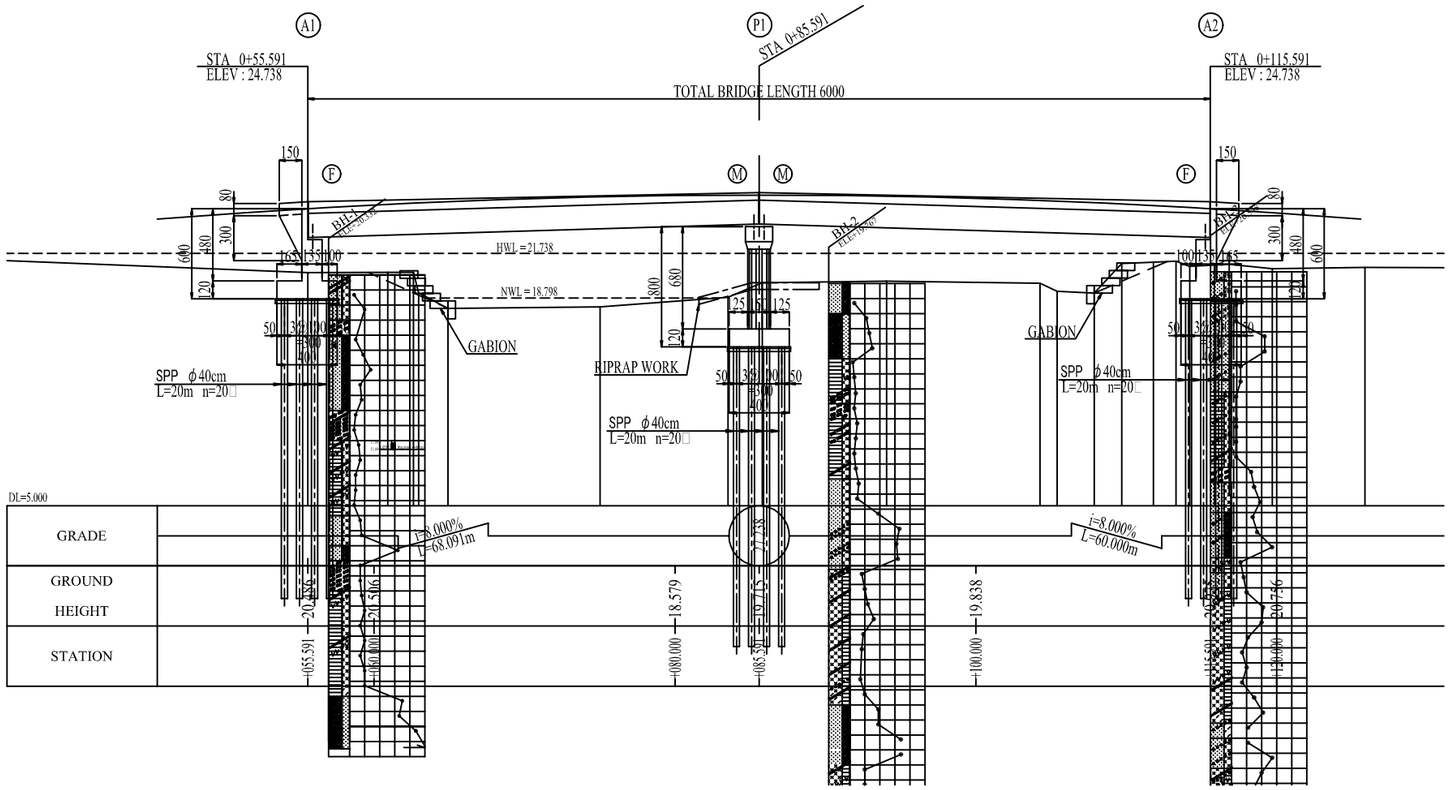

CROSS SECTION FOR PC GIRDER
SCALE 1:100

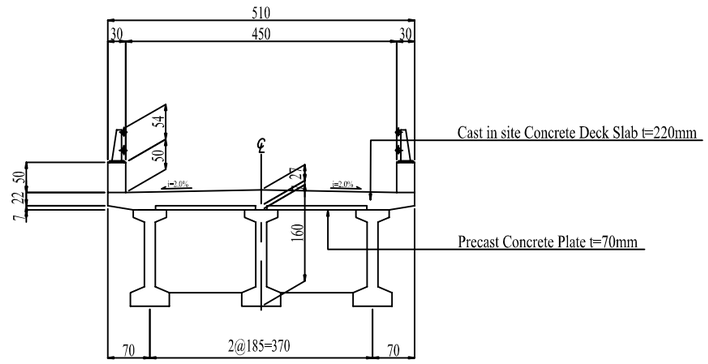

PLAN
SCALE 1:400

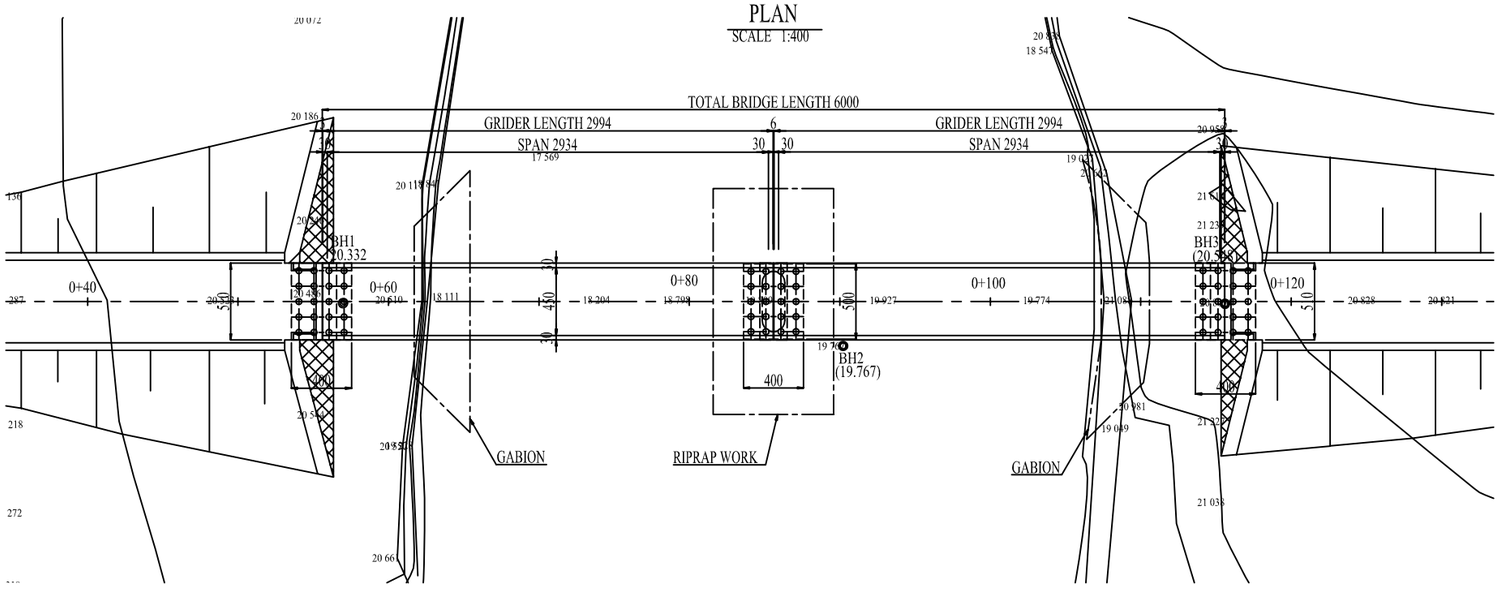

DESIGN CRITERIA

General Condition		
Design Live Load	"D" Lane Load	
Design Speed	V=40km/h	
Bridge Length(Span Length)	60.00m(2@29.34m)	
Longitudinal Gradient	8.0%, -8.0%	
Cross-fall of Carriage way	2.00%	
Super Structure Type	Prestressed Concrete	
Sub Structure Type	Reinforced Concrete	
Foundation Type	Steel Pipe Pile φ40cm	
Material Strength		
Super Structure Type	Girder	$\sigma 28=34.6N/mm^2$
	Cross Beam	$\sigma 28=29N/mm^2$
	Slab	$\sigma 28=29N/mm^2$
Surface	Curb,Handrail	$\sigma 28=21N/mm^2$
Sub Structure Type		$\sigma 28=21N/mm^2$
Reinforcing Steel		SD235(py=235N/mm²)

SECTION	SCALE	DRAWING NO.	SHEET NO.
			20 OF 29
DRAWING TITLE	BR.NO.B13 BUNGKUDO I GENERAL VIEW OF THE SITE		

BR.NO.B13 BUNGKUDO I
GENERAL VIEW OF THE SITE

	X	Y	Z
BM B13A	328509.052	120986.489	8.249
BM B13B	328594.022	120912.403	8.143

PLAN
SCALE 1:1000

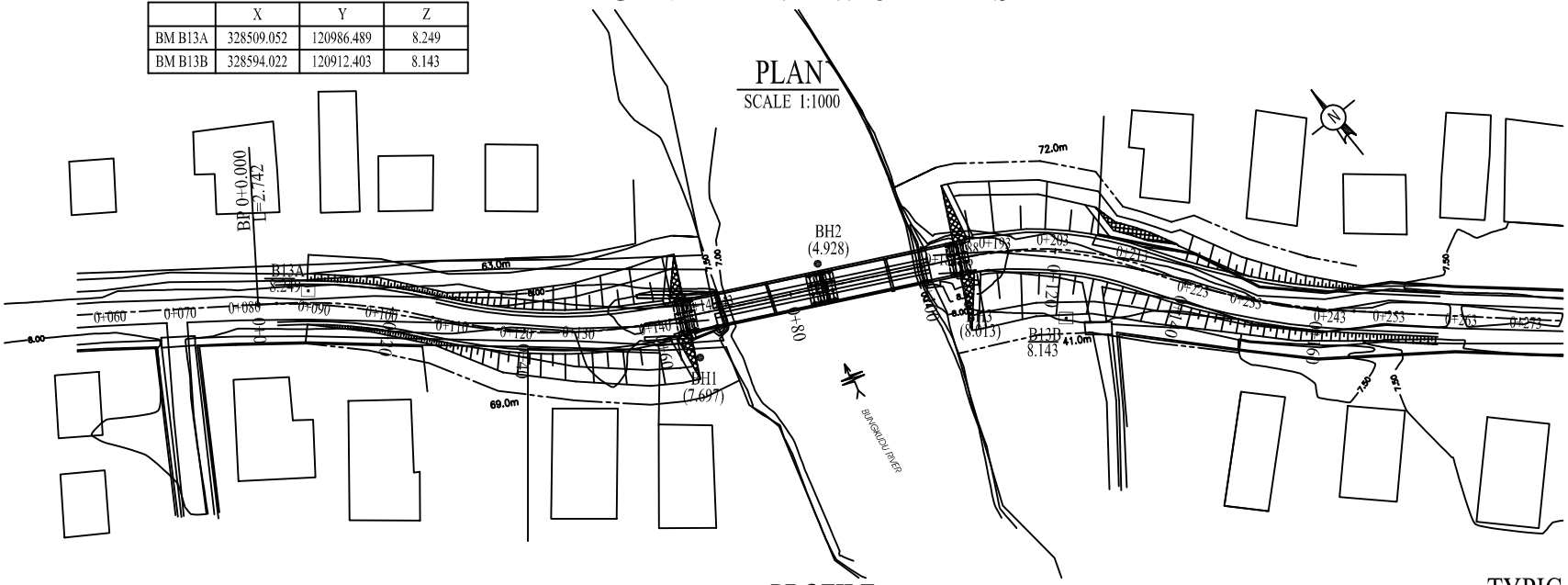

PROFILE
SCALE V=1:500
H=1:1000

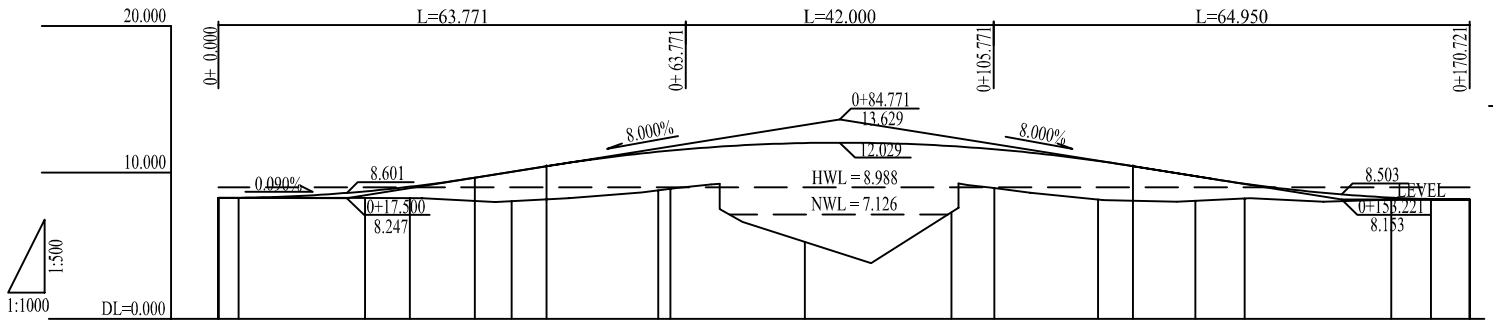

TYPICAL CROSS SECTION
SCALE 1:250

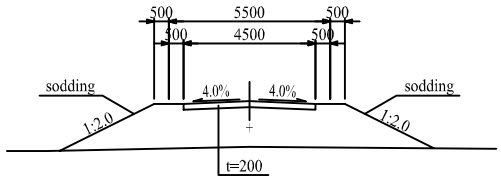

GROUND HEIGHT	8.263	8.260	8.260	8.256	8.247	8.032	8.775	8.882	5.259	4.496	7.274	8.927	8.150	8.061	8.219	8.038	8.139	8.151	8.153
STATION	NO.0	+002.742	+017.500	+020.000	+026.117	+040.000	+060.000	+061.668	+080.000	+084.771	+100.000	+105.850	+120.000	+133.298	+140.000	+153.221	+160.000	+165.442	+170.721

SECTION	SCALE	DRAWING NO.	SHEET NO.
	1/100 ,1/400		21 OF 29
DRAWING TITLE	BR.NO.B13 BUNGKUDO I GENERAL VIEW OF THE BRIDGE		

BR.NO.B13 BUNGKUDO I
GENERAL VIEW OF THE BRIDGE

PROFILE
SCALE 1:400

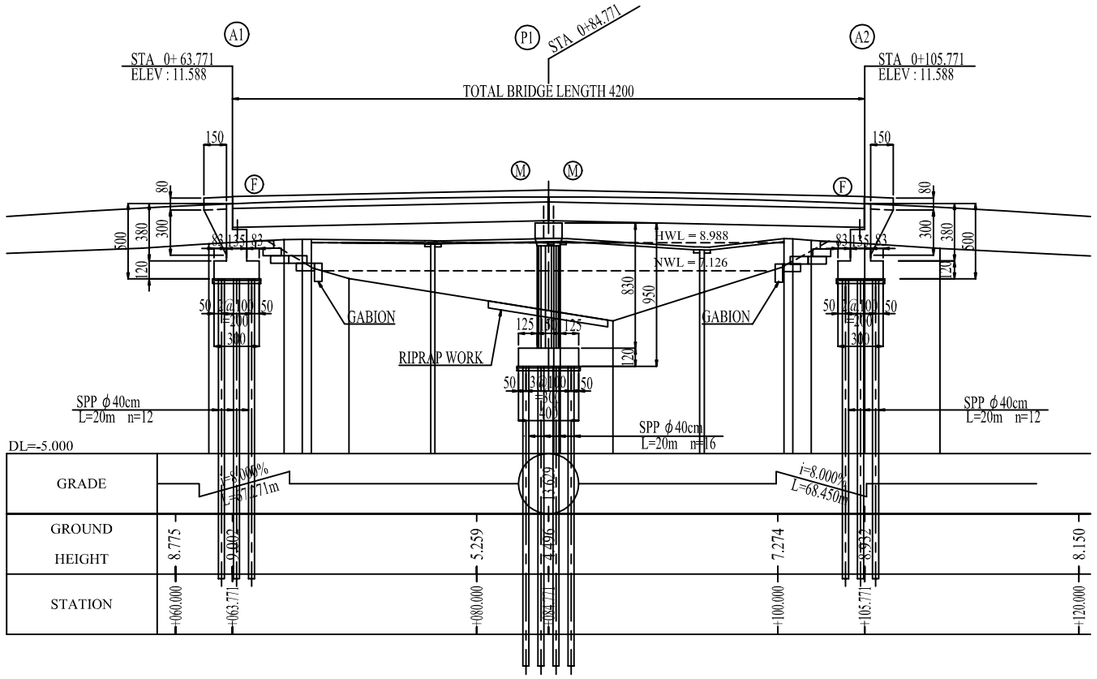

CROSS SECTION FOR RC GIRDER
SCALE 1:100

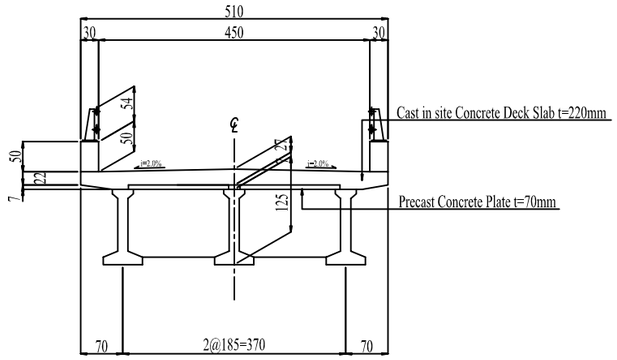

PLAN
SCALE 1:400

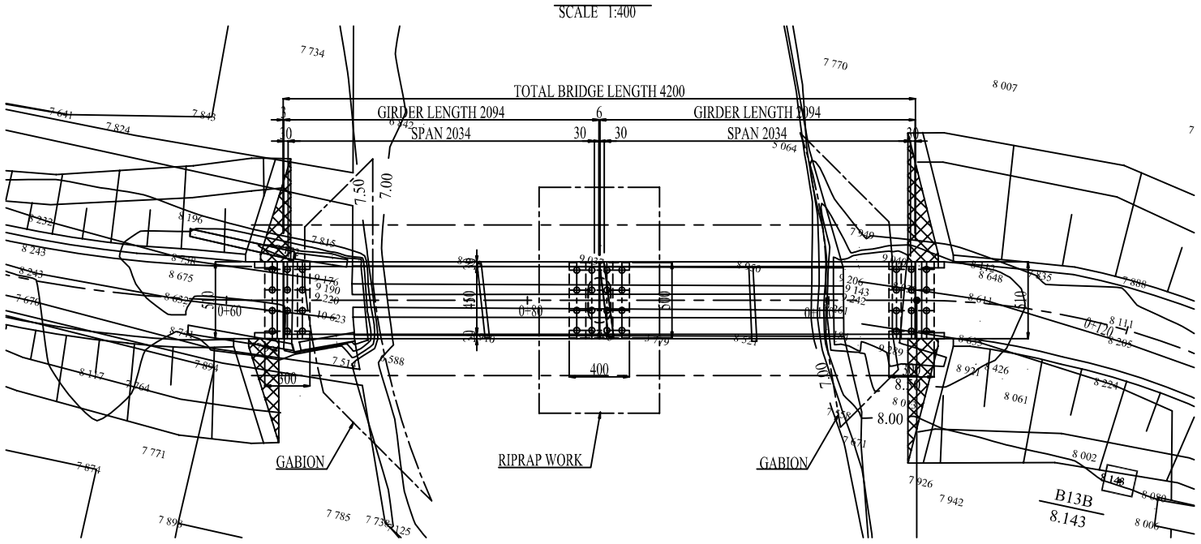

DESIGN CRITERIA

General Condition		
Design Live Load	"D" Lane Load	
Design Speed	V=40km/h	
Bridge Length(Span Length)	42.00m(2@20.34m)	
Longitudinal Gradient	8.0%, -8.0%	
Cross-fall of Carriage way	2.00%	
Super Structure Type	Prestressed Concrete	
Sub Structure Type	Reinforced Concrete	
Foundation Type	Steel Pipe Pile ϕ40cm	
Material Strength		
Super Structure Type	Girder	$\sigma 28=34.6N/mm^2$
	Cross Beam	$\sigma 28=29N/mm^2$
	Slab	$\sigma 28=29N/mm^2$
Surface	Curb,Handrail	$\sigma 28=21N/mm^2$
Sub Structure Type		$\sigma 28=21N/mm^2$
Reinforcing Steel		SD235(py=235N/mm²)

SECTION	SCALE	DRAWING NO.	SHEET NO.
			22 OF 29
DRAWING TITLE	BR.NO.B21 MATINAN GENERAL VIEW OF THE SITE		

BR.NO.B21 MATINAN

GENERAL VIEW OF THE SITE

PLAN

SCALE 1:1000

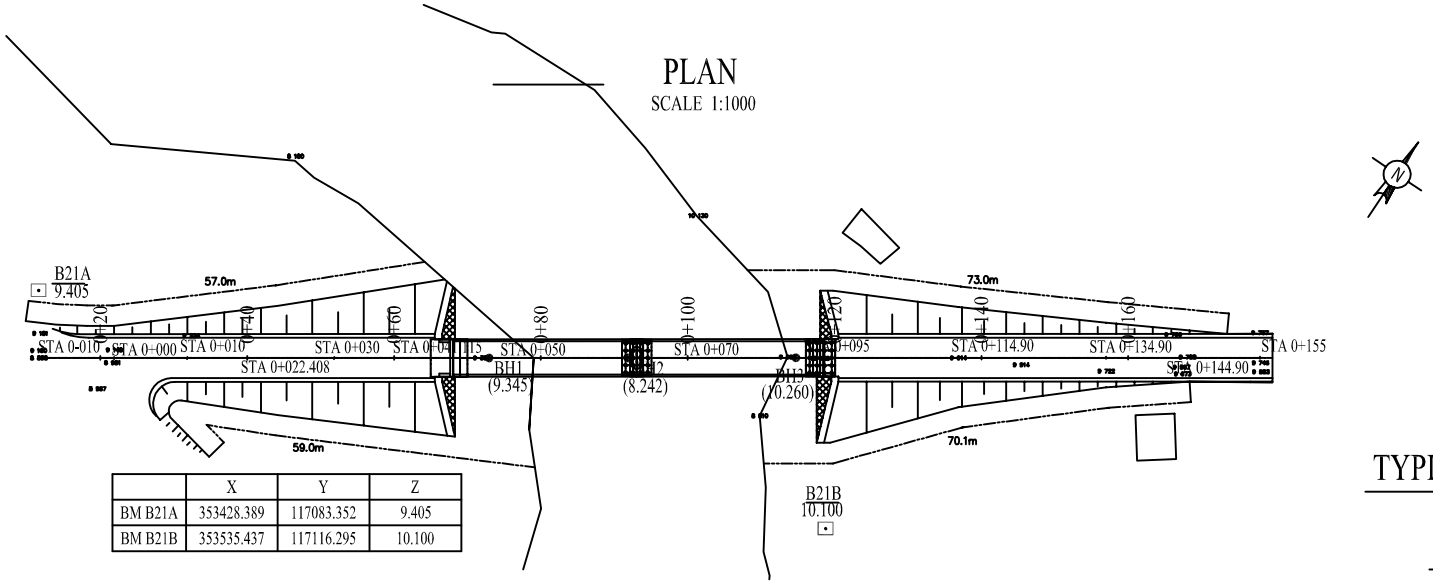

	X	Y	Z
BM B21A	353428.389	117083.352	9.405
BM B21B	353535.437	117116.295	10.100

TYPICAL CROSS SECTION

SCALE 1:250

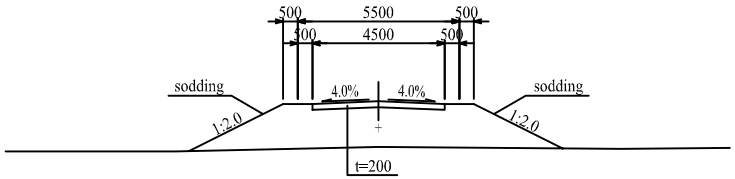

PROFILE

SCALE V=1:500
H=1:1000

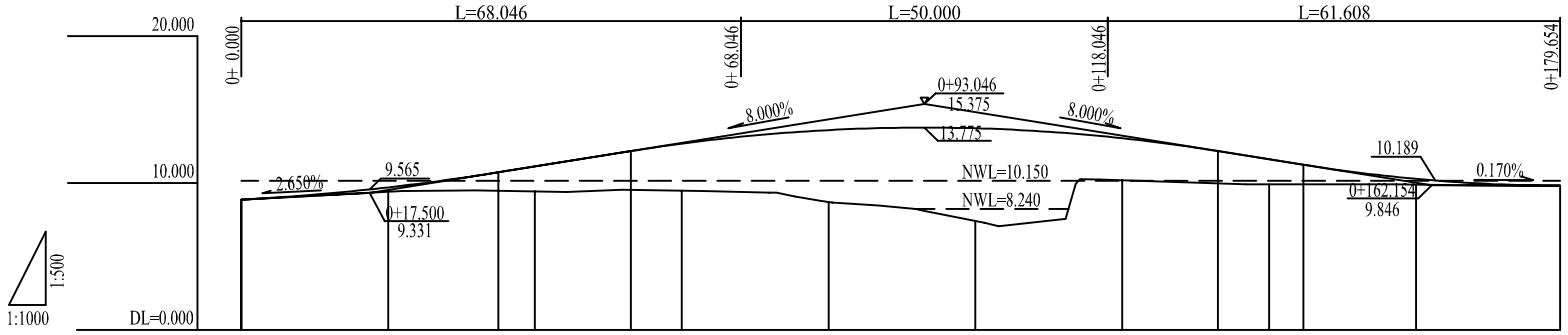

GROUND HEIGHT	8.867	9.329	9.396	9.423	9.478	8.708	8.109	7.409	10.185	9.913	9.886	9.870	9.816
STATION	NO.0	+017.500	+020.000	+040.000	+060.000	+080.000	+093.046	+100.000	+120.000	+140.000	+160.000	+162.154	+179.654

SECTION	SCALE	DRAWING NO.	SHEET NO.
	1/100 ,1/400		23 OF 29
DRAWING TITLE	BR.NO.B21 MATINAN GENERAL VIEW OF THE BRIDGE		

BR.NO.B21 MATINAN
GENERAL VIEW OF THE BRIDGE

PROFILE
SCALE 1:400

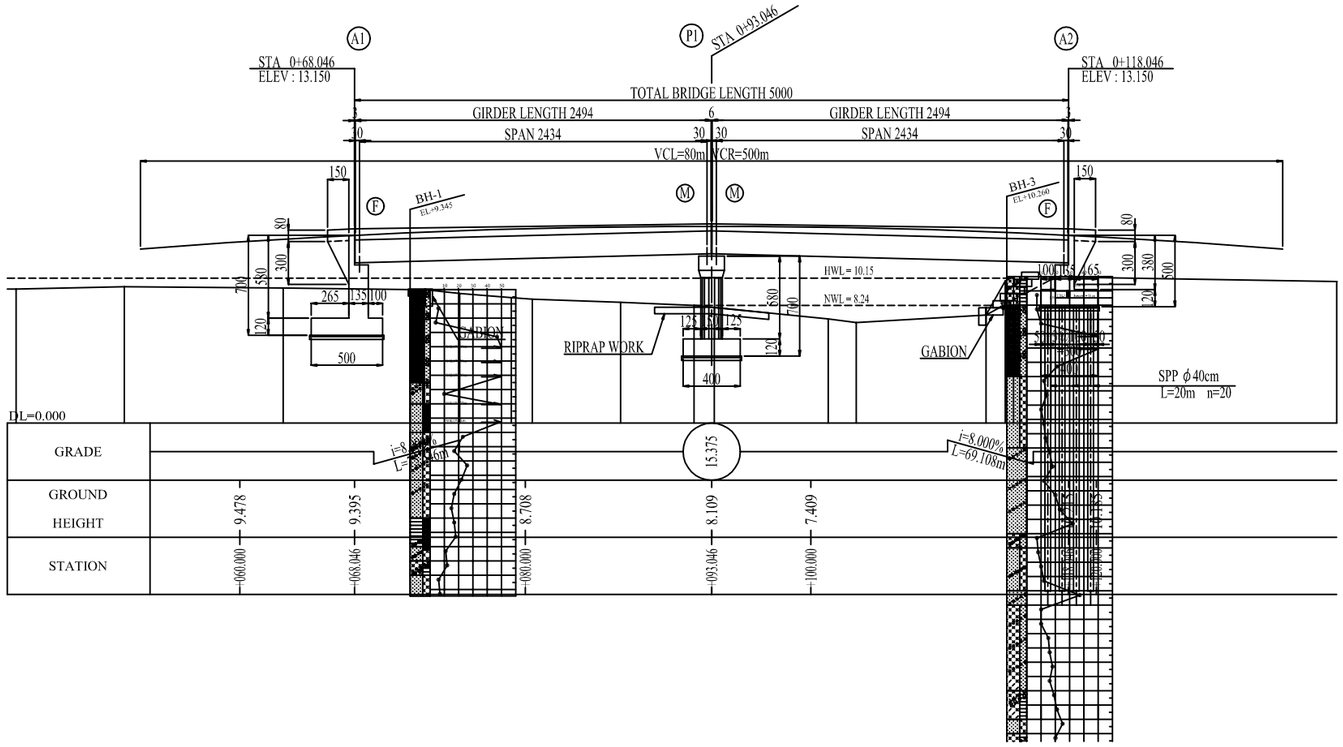

CROSS SECTION FOR PC GIRDER
SCALE 1:100

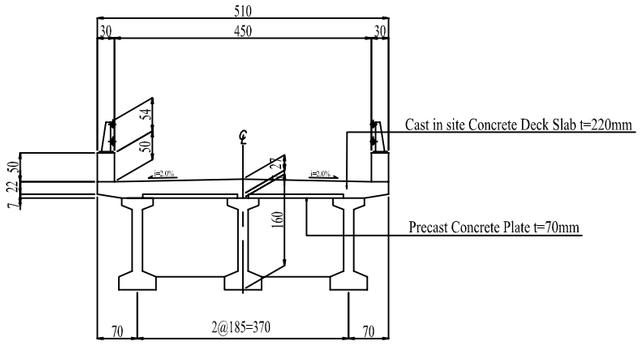

PLAN
SCALE 1:400

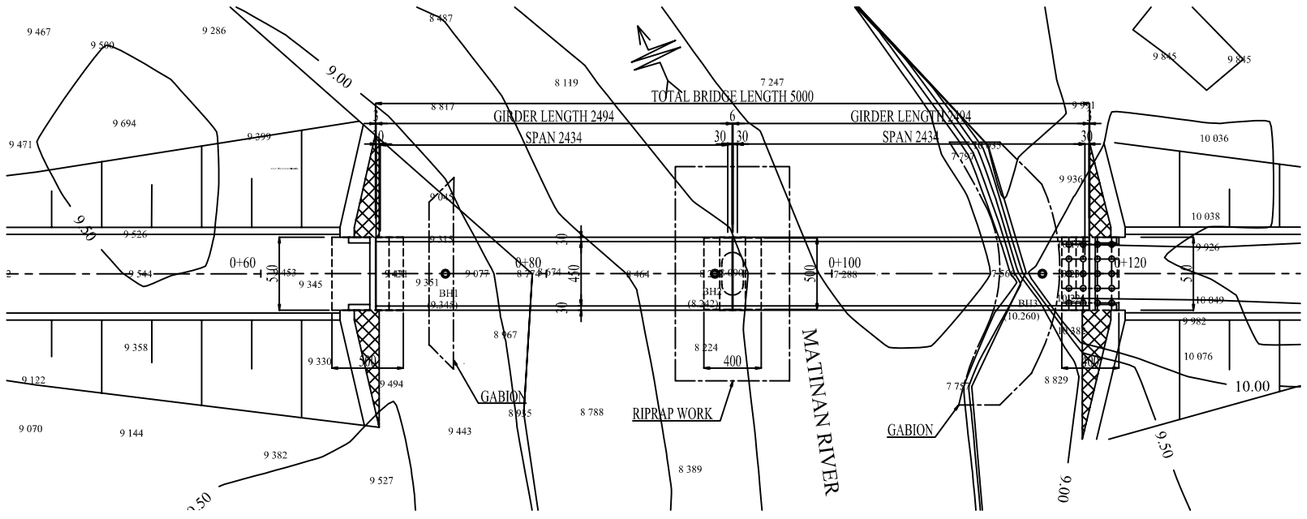

DESIGN CRITERIA

General Condition		
Design Live Load	"D" Lane Load	
Design Speed	V=40km/h	
Bridge Length(Span Length)	50.00m(2@24.34m)	
Longitudinal Gradient	8.0%, -8.0%	
Cross-fall of Carriage way	2.00%	
Super Structure Type	Prestressed Concrete	
Sub Structure Type	Reinforced Concrete	
Foundation Type	Steel Pipe Pile ϕ40cm CDirect Foundation	
Material Strength		
Super Structure Type	Girder	$\sigma 28=34.6N/mm^2$
	Cross Beam	$\sigma 28=29N/mm^2$
	Slab	$\sigma 28=29N/mm^2$
Surface	Curb,Handrail	$\sigma 28=21N/mm^2$
Sub Structure Type		$\sigma 28=21N/mm^2$
Reinforcing Steel		SD235(py=235N/mm²)

SECTION	SCALE	DRAWING NO.	SHEET NO.
			24 OF 29
DRAWING TITLE	BR.NO.S26,S27 PATUKUKI I,II GENERAL VIEW OF THE SITE		

BR.NO.S26,S27 PATUKUKI I,II
GENERAL VIEW OF THE SITE

PLAN
SCALE 1:1000

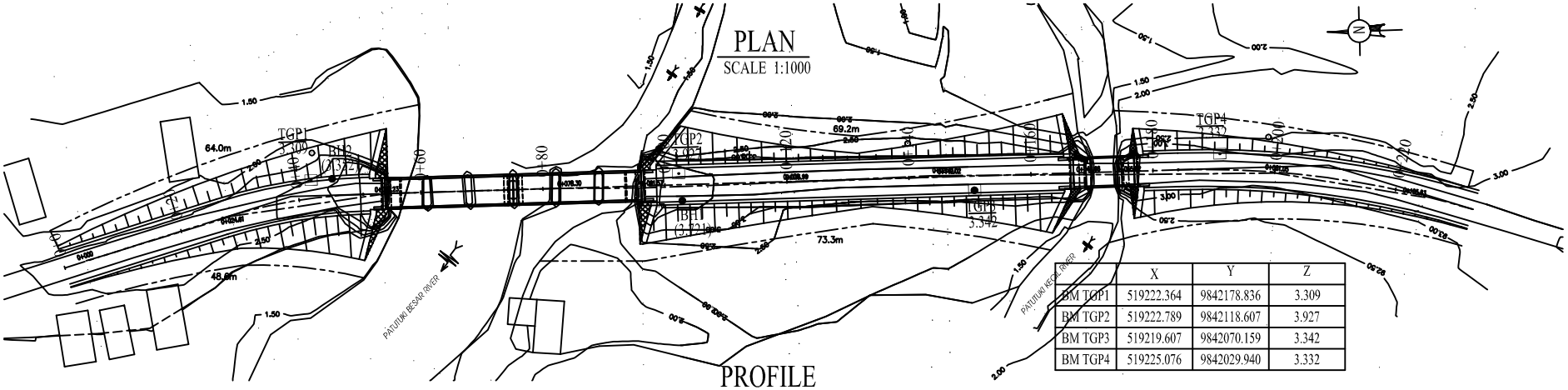

	X	Y	Z
BM TGP1	519222.364	9842178.836	3.309
BM TGP2	519222.789	9842118.607	3.927
BM TGP3	519219.607	9842070.159	3.342
BM TGP4	519225.076	9842029.940	3.332

PROFILE
SCALE V=1:500
H=1:1000

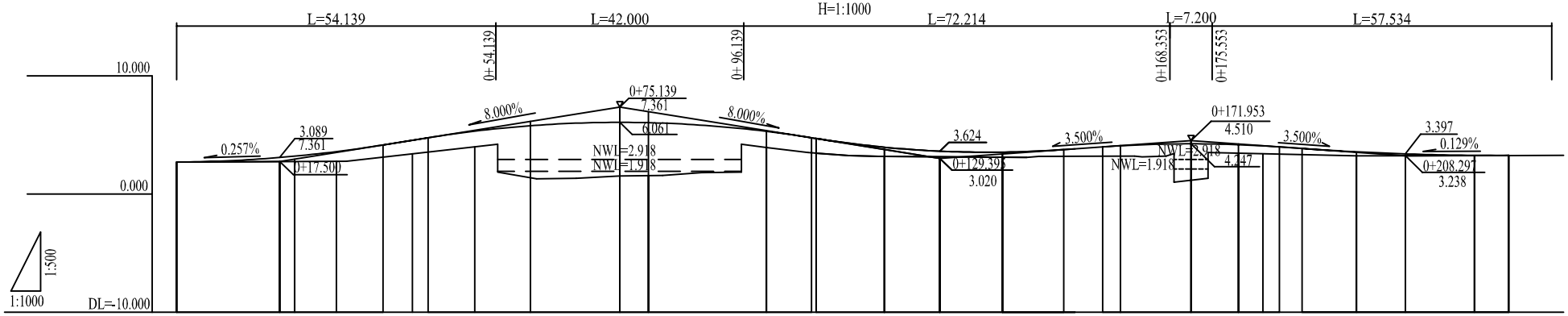

GROUND HEIGHT	2.705	2.748	2.754	2.773	3.406	3.998	1.373	1.527	1.559	3.930	3.176	3.148	3.117	3.205	1.164	3.459	3.411	3.228	3.238	3.253	3.261	3.270
STATION	0.000	17.500	2.500	7.104	12.896	10.539	9.461	15.139	4.861	20.000	20.000	9.395	10.605	20.000	11.953	8.047	4.133	15.867	8.297	11.703	5.797	7.290

TYPICAL CROSS SECTION
SCALE 1:250

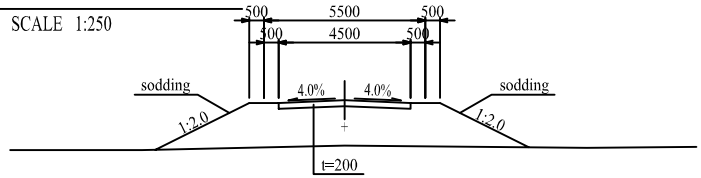

SECTION	SCALE	DRAWING NO.	SHEET NO.
	1/100 ,1/400		25 OF 29
DRAWING TITLE	BR.NO.S26 PATUKUKI I GENERAL VIEW OF THE BRIDGE		

BR.NO.S26 PATUKUKI I
GENERAL VIEW OF THE BRIDGE

PROFILE
SCALE 1:400

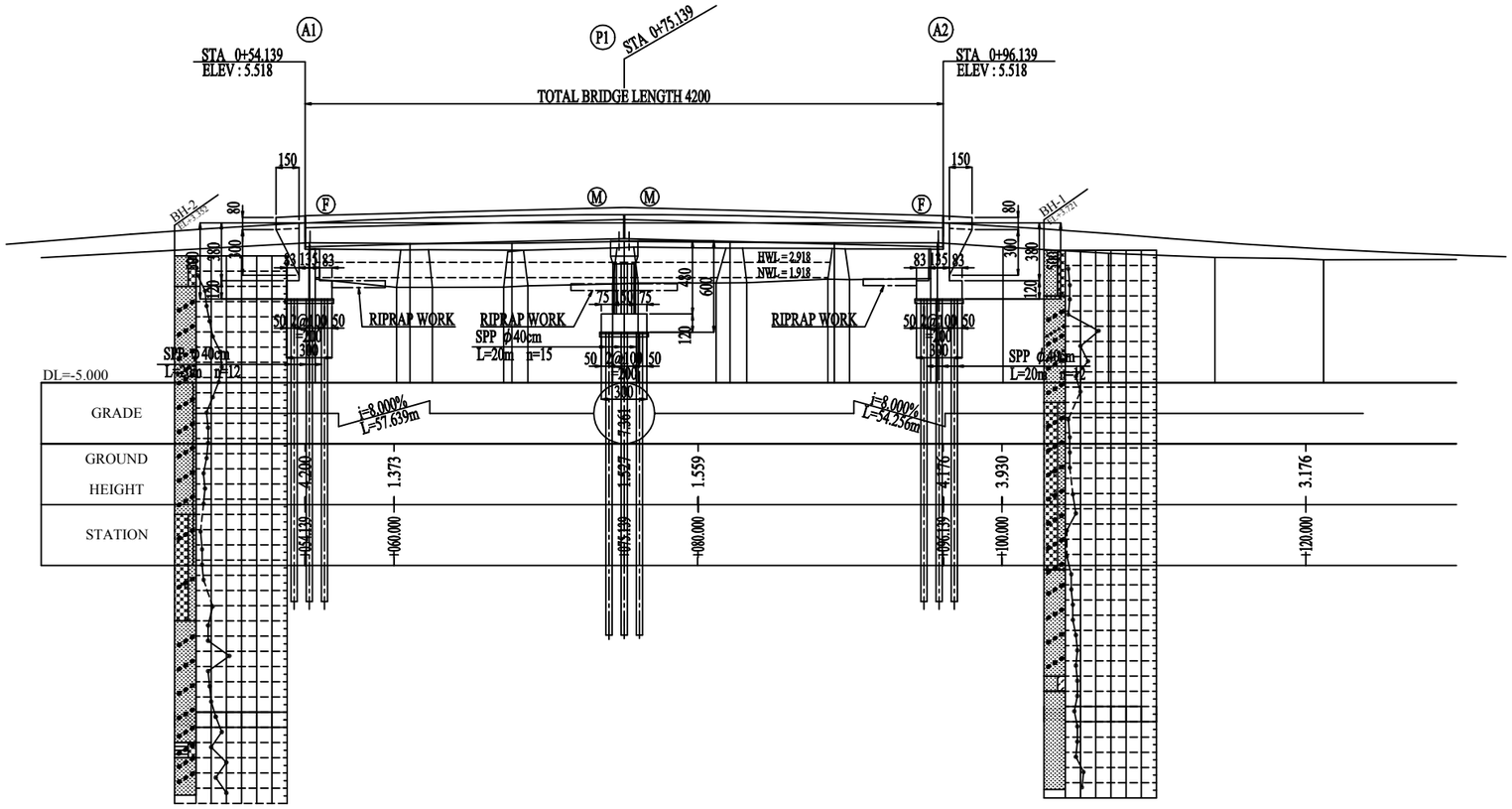

CROSS SECTION FOR PC GIRDER
SCALE 1:100

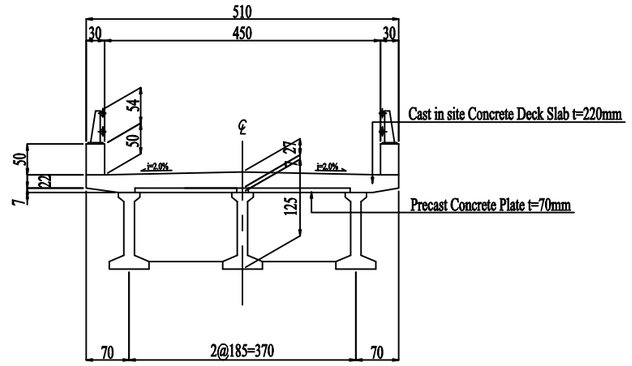

PLAN
SCALE 1:400

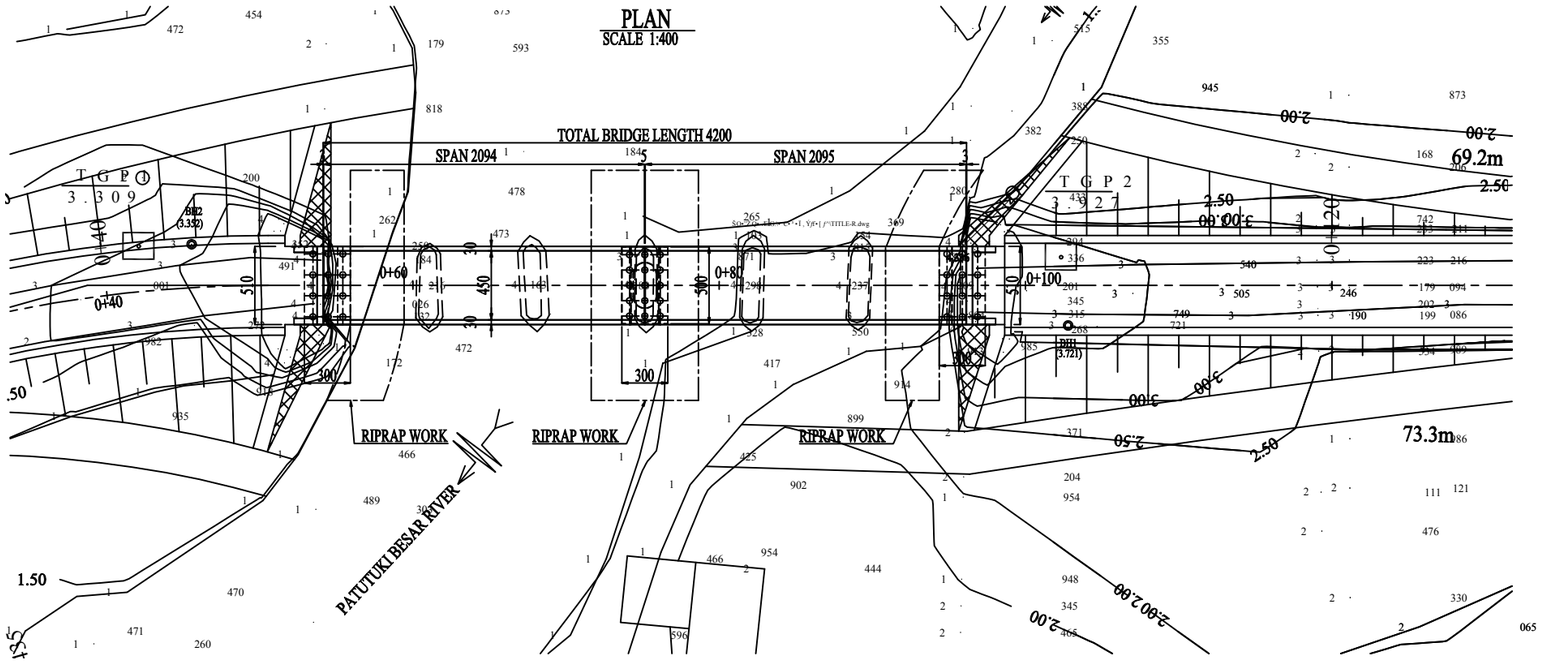

DESIGN CRITERIA

General Condition		
Design Live Load	"D" Lane Load	
Design Speed	V=40km/h	
Bridge Length(Span Length)	42.00m(2@20.34m)	
Longitudinal Gradient	8.0%, -8.0%	
Cross-fall of Carriage way	2.00%	
Super Structure Type	Prestressed Concrete	
Sub Structure Type	Reinforced Concrete	
Foundation Type	Steel Pipe Pile Φ40cm	
Material Strength		
Super Structure Type	Girder	$\sigma 28=34.6N/mm^2$
	Cross Beam	$\sigma 28=29N/mm^2$
	Slab	$\sigma 28=29N/mm^2$
Surface	Curb,Handrail	$\sigma 28=21N/mm^2$
Sub Structure Type		$\sigma 28=21N/mm^2$
Reinforcing Steel		SD235(py=235N/mm²)

SECTION	SCALE	DRAWING NO.	SHEET NO.
	1/100,1/200		26 OF 29
DRAWING TITLE	BR.NO.S27 PATUKUKI II GENERAL VIEW OF THE BOX CULVERT		

BR.NO.S27 PATUKUKI II
GENERAL VIEW OF THE BOX CULVERT

PROFILE
SCALE 1:200

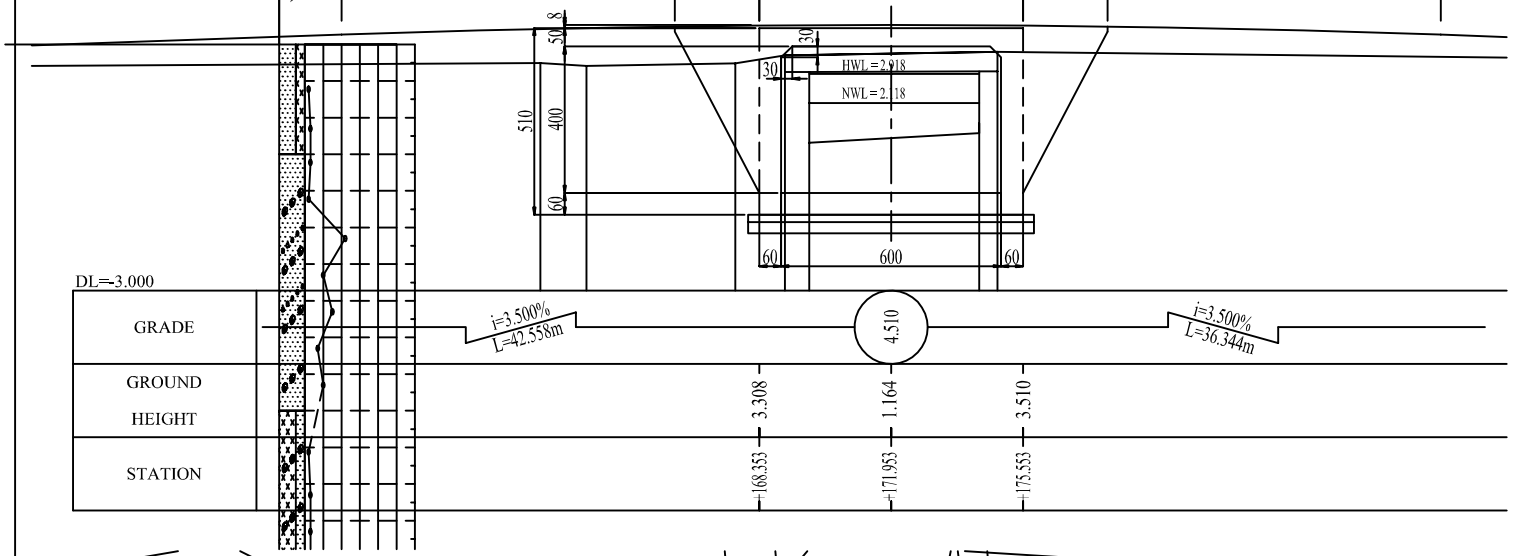

SECTION A-A
SCALE 1:100

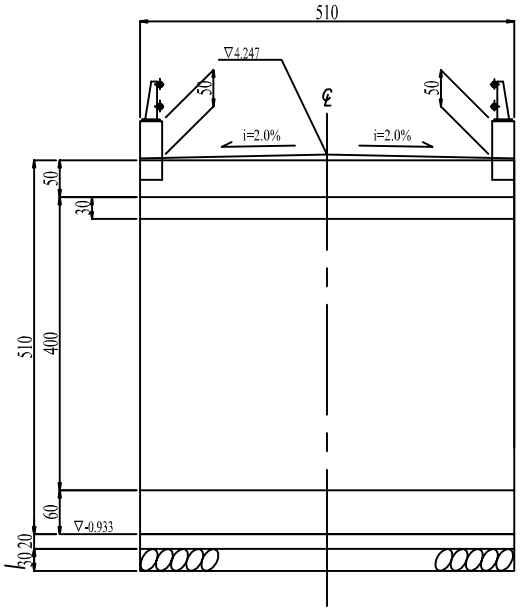

PLAN
SCALE 1:200

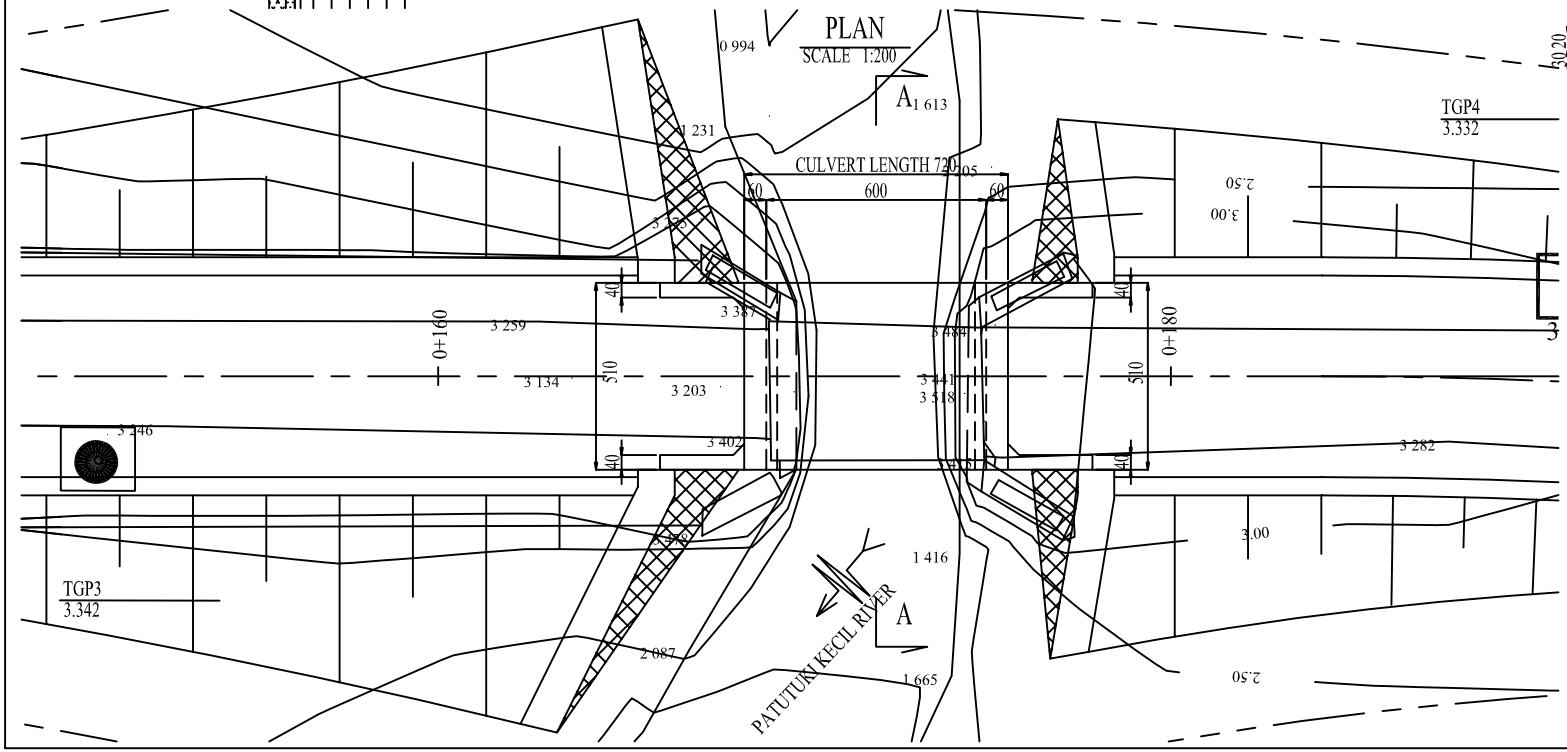

DESIGN CRITERIA

General Condition		
Design Live Load	"D" Lane Load	
Design Speed	V=40km/h	
Culvert Length	7.2m	
Longitudinal Gradient	3.5%, -3.5%	
Cross-fall of Carriage way	2.00%	
Sub Structure Type	Reinforced Concrete	
Foundation Type	Direct Foundation	
Material Strength		
Surface	Curb,Handrail	σ28=21N/mm^2
Sub Structure Type		σ28=21N/mm^2
Reinforcing Steel		SD235(py=235N/mm^2)

SECTION	SCALE	DRAWING NO.	SHEET NO.
	1/200 ,1/400		27/ OF 29
DRAWING TITLE	BR.NO.3 POIGAR GENERAL VIEW OF THE BRIDGE		

BR.NO.3 POIGAR
GENERAL VIEW OF THE BRIDGE

PROFILE
SCALE:1:400

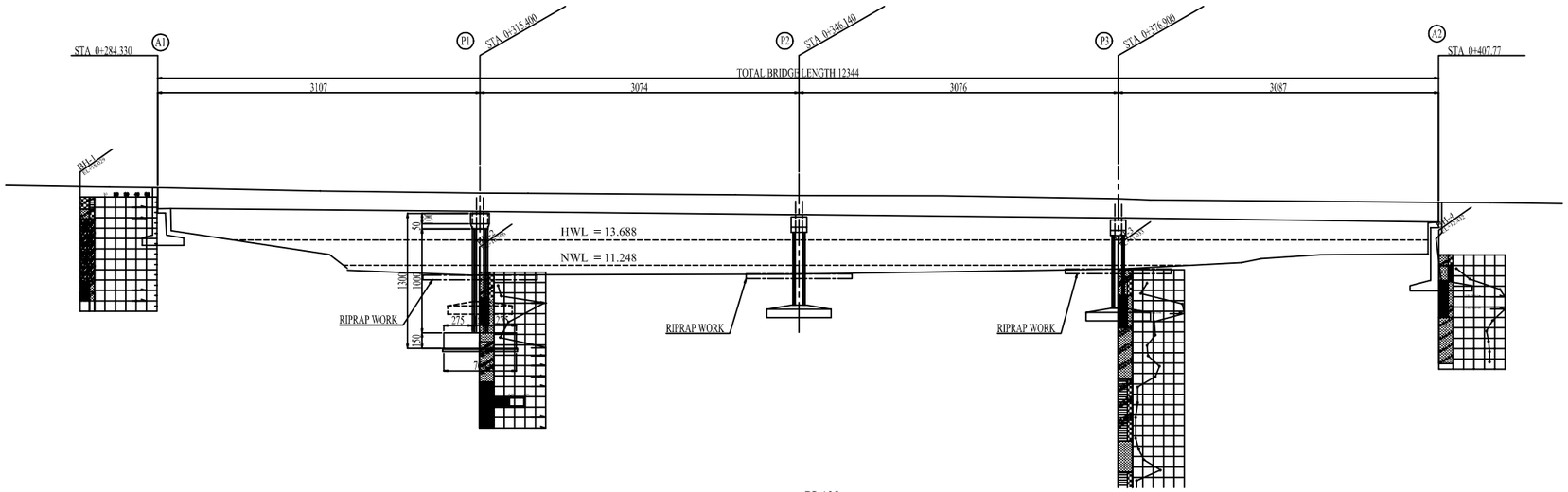

PLAN
SCALE:1:400

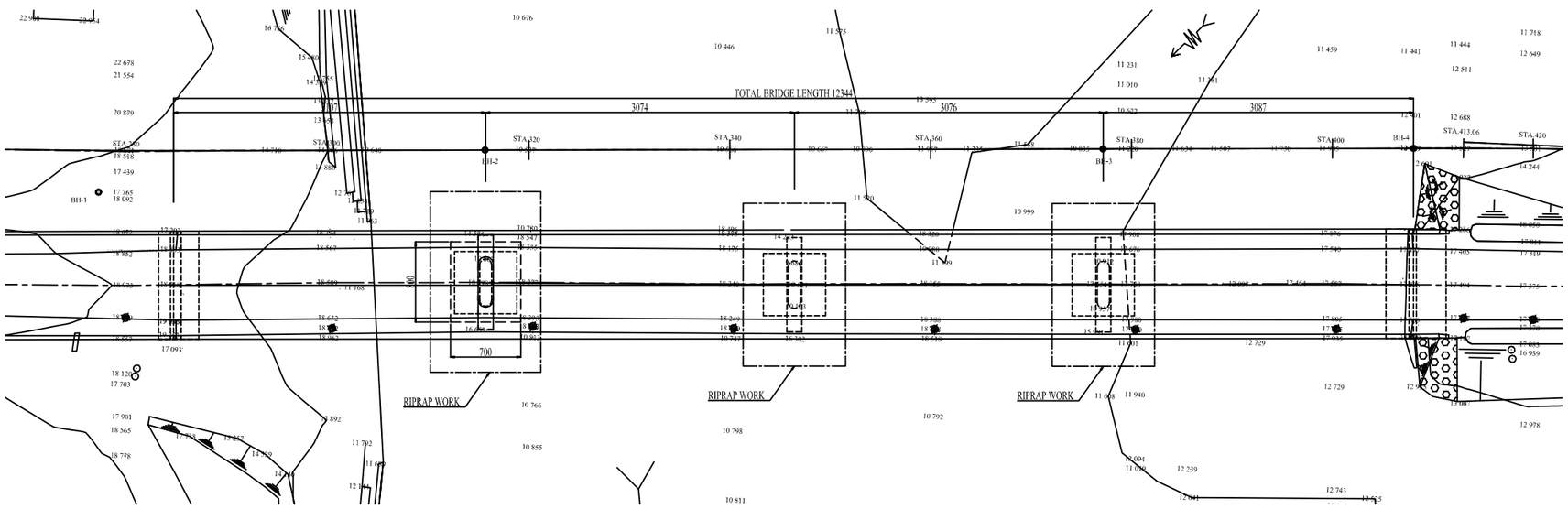

FRONT VIEW
SCALE: 1:200

PIER 1

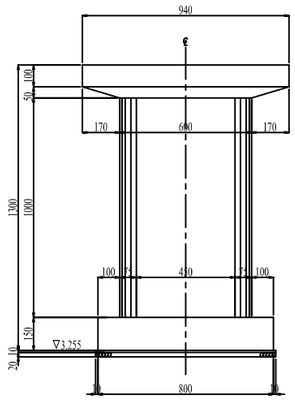

DESIGN CRITERIA

General Condition		
Design Live Load	"D" Lane Load	
Design Speed	—	
Bridge Length(Span Length)	—	
Longitudinal Gradient	—	
Cross-fall of Carriage way	—	
Sub Structure Type	Pier	Reinforced Concrete
Foundation Type	Pier	Direct Foundation
Material Strength		
Sub Structure Type		σ 28=21N/mm^2
Reinforcing Steel		SD235(py=235N/mm^2)

SECTION	SCALE	DRAWING NO.	SHEET NO.
			28 OF 29
DRAWING TITLE	BR.NO.4 MEGAWATI GENERAL VIEW OF THE SITE		

BR.NO.4 MEGAWATI
GENERAL VIEW OF THE SITE

PLAN
SCALE 1:1000

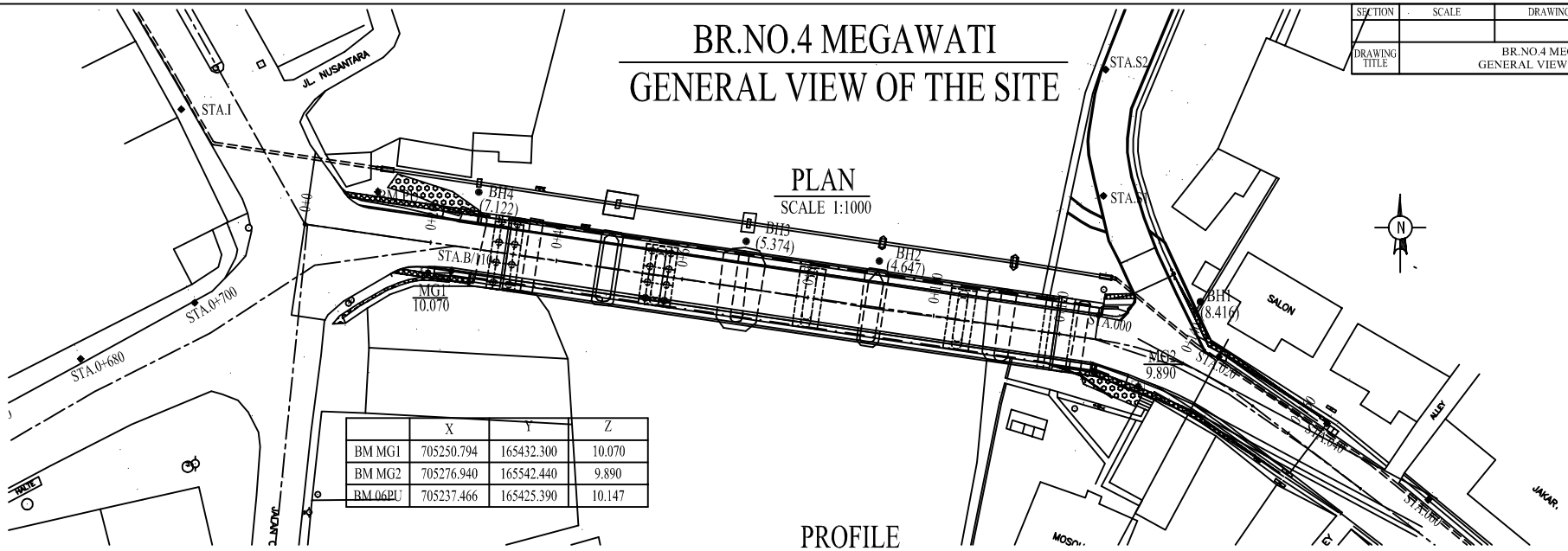

	X	Y	Z
BM MG1	705250.794	165432.300	10.070
BM MG2	705276.940	165542.440	9.890
BM 06PU	705237.466	165425.390	10.147

PROFILE
SCALE V=1:500
H=1:1000

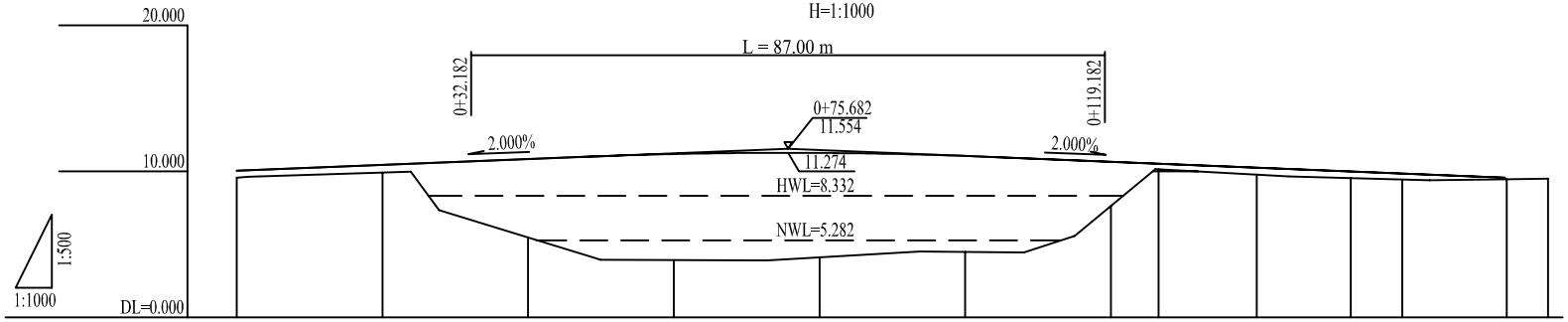

GROUND HEIGHT	9.561	9.924	5.463	3.921	3.983	4.110	4.489	7.645	10.148	9.780	9.542	9.445	9.462 9.463	9.500
STATION	NO.0	+020.000	+040.000	+060.000	+075.682	+080.000	+100.000	+120.000	+126.519	+140.000	+152.941	+160.000	+174.123 +174.324	+180.000

TYPICAL CROSS SECTION
SCALE 1:250

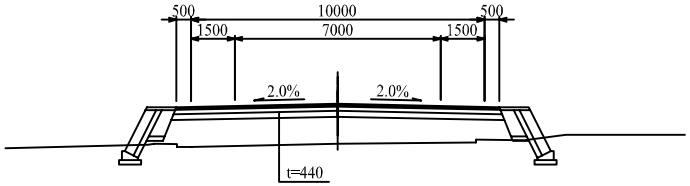

SECTION	SCALE	DRAWING NO.	SHEET NO.
	1:200, 1:400		29 OF 29
DRAWING TITLE	BR.NO.4 MEGAWATI GENERAL VIEW OF THE BRIDGE		

BR.NO.4 MEGAWATI
GENERAL VIEW OF THE BRIDGE

PROFILE
SCALE 1:400

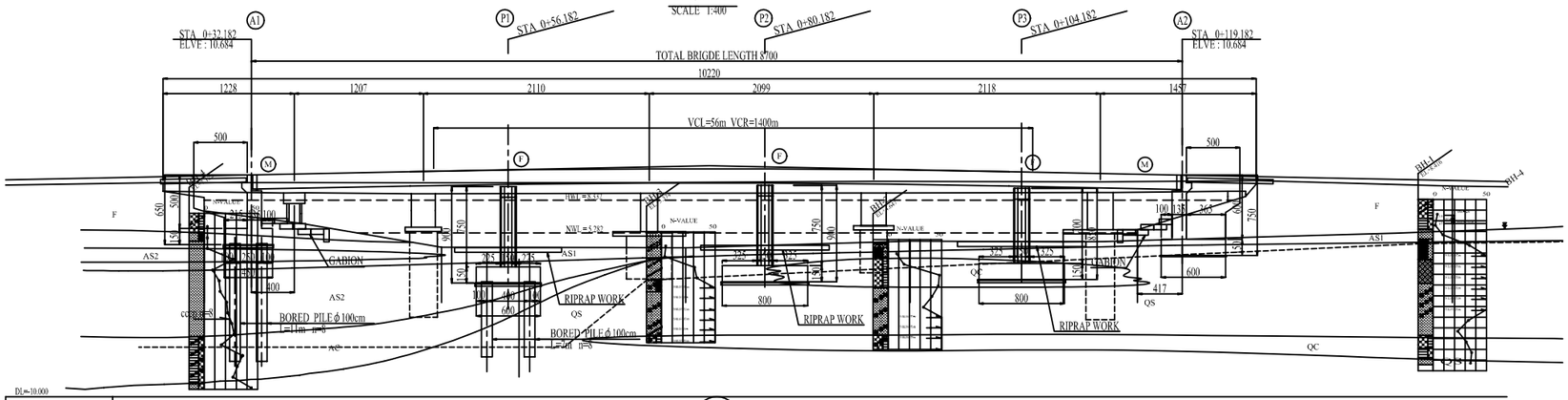

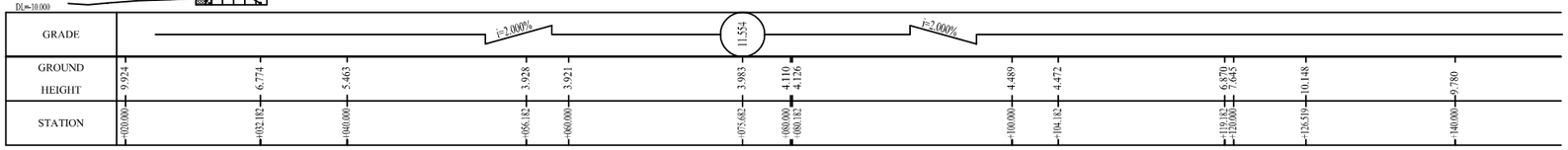

CROSS SECTION FOR PC HOLLOW SLAB
SCALE 1:200

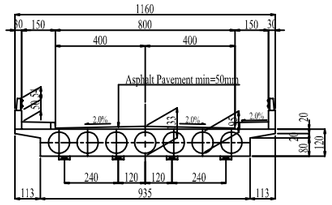

PLAN
SCALE 1:400

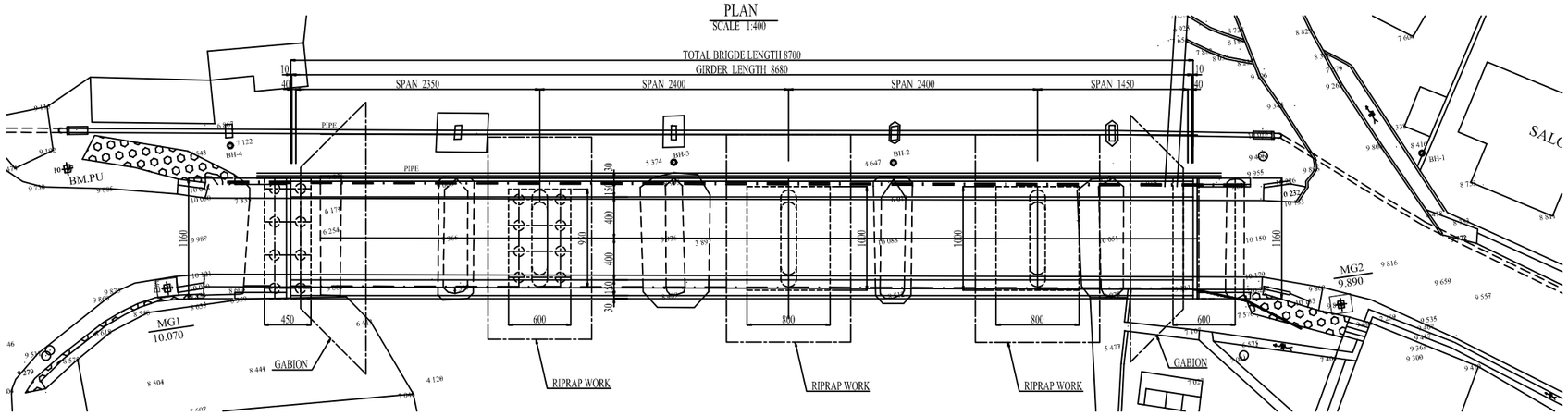

DESIGN CRITERIA

General Condition		
Design Live Load	"D" Lane Load	
Design Speed	V=60km/h	
Bridge Length(Span Length)	87.00m(23.50m+2@24.00m+14.50m)	
Longitudinal Gradient	2.0%, -2.0%	
Cross-fall of Carriage way	2.00 %	
Super Structure Type	Prestressed Concrete	
Sub Structure Type	Reinforced Concrete	
Foundation Type	Bored Pile ϕ 100cm,Direct Foundation	
Material Strength		
Super Structure Type	Girder	σ 28=34.6N/mm^2
Surface	Curb,Handrail	σ 28=21N/mm^2
Sub Structure Type		σ 28=21N/mm^2
Reinforcing Steel		SD235(py=235N/mm^2)