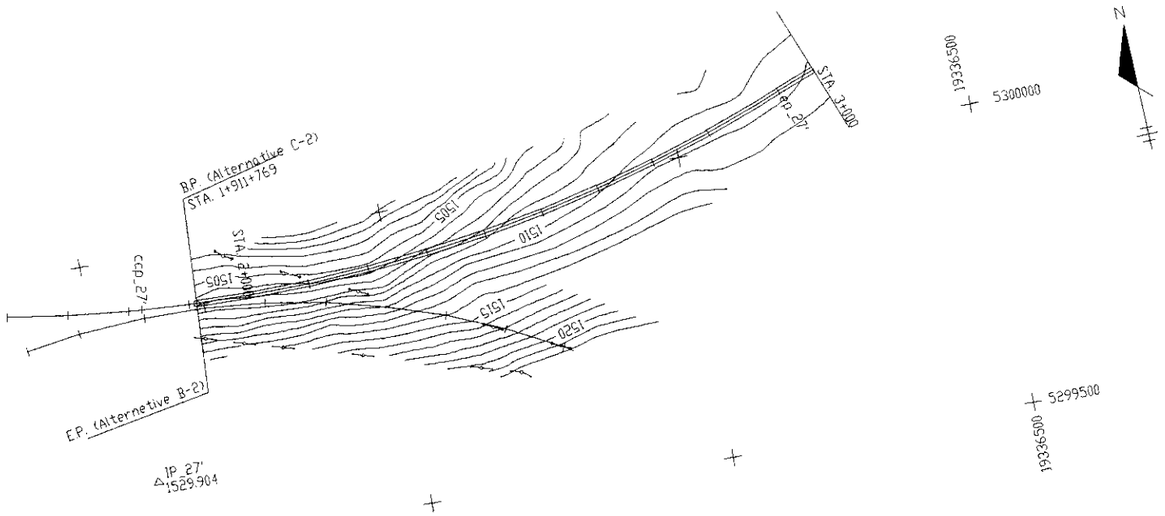

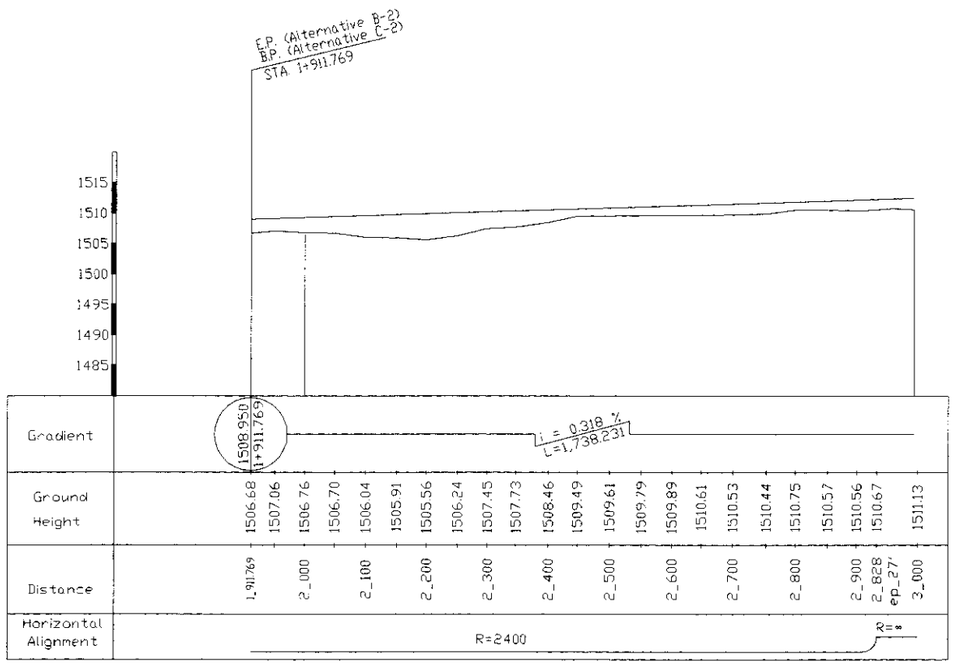

1+911 769 - 2+000

THE FEASIBILITY STUDY ON CONSTRUCTION OF EASTERN ARTERIAL ROAD IN MONGOLIA		
JAPAN INTERNATIONAL COOPERATION AGENCY (JICA)	DEPARTMENT OF ROADS, MINISTRY OF INFRASTRUCTURE, THE GOVERNMENT OF MONGOLIA	
PACIFIC CONSULTANTS INTERNATIONAL JAPAN OVERSEAS CONSULTANTS		
Drawing title	Scale	No.
PLAN AND PROFILE (Alternative C-2)	H=1:10,000 V=1,000	E-23

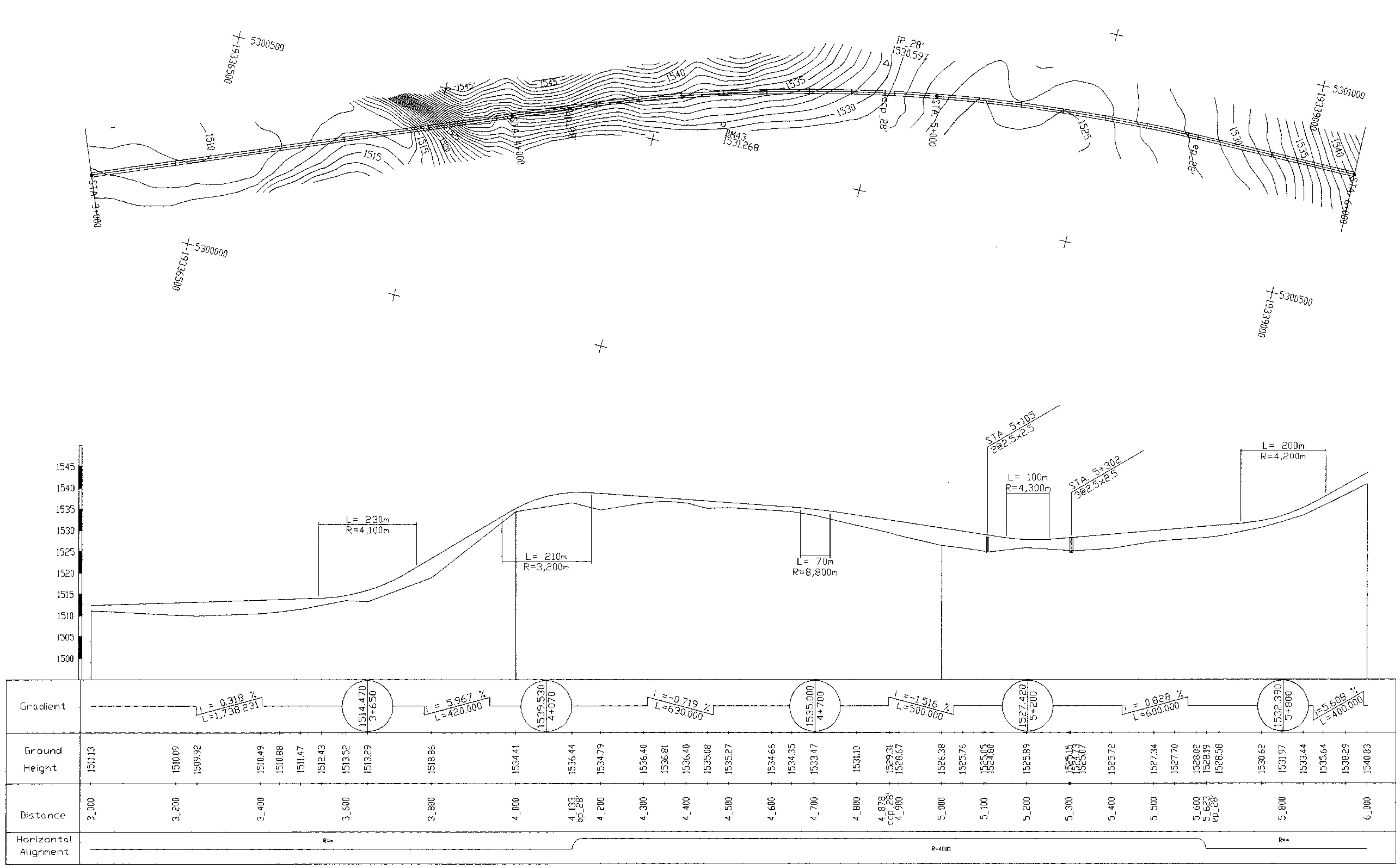

3_000 - 6_000

THE FEASIBILITY STUDY ON CONSTRUCTION OF EASTERN ARTERIAL ROAD IN MONGOLIA		
JAPAN INTERNATIONAL COOPERATION AGENCY (JICA)	DEPARTMENT OF ROADS, MINISTRY OF INFRASTRUCTURE, THE GOVERNMENT OF MONGOLIA	
PACIFIC CONSULTANTS INTERNATIONAL JAPAN OVERSEAS CONSULTANTS		
Drawing title	Scale	No.
PLAN AND PROFILE (Alternative C-2)	H=1:10,000 V=1:1,000	E-24

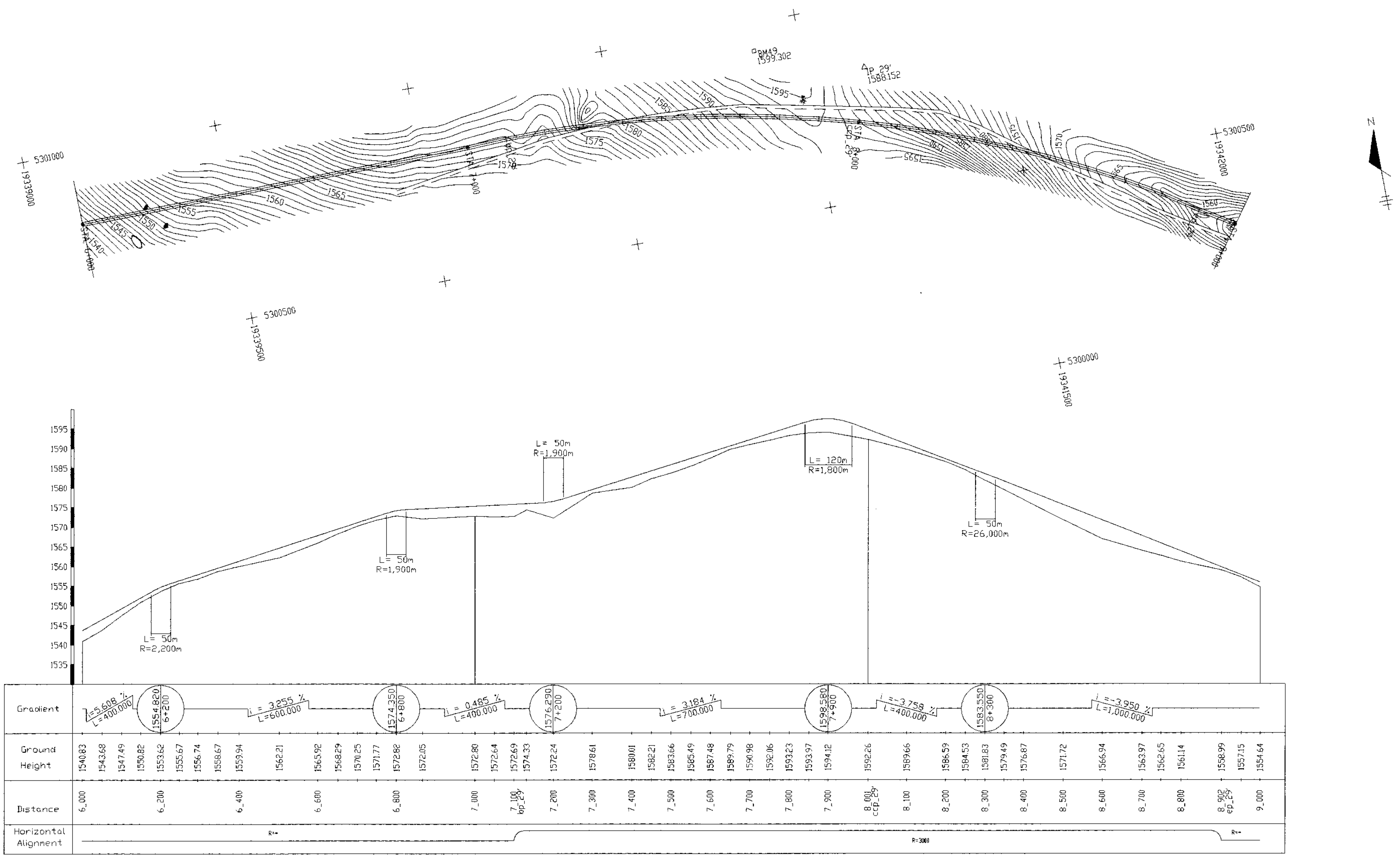

6_000 - 9_000

THE FEASIBILITY STUDY ON CONSTRUCTION OF EASTERN ARTERIAL ROAD IN MONGOLIA	
JAPAN INTERNATIONAL COOPERATION AGENCY (JICA)	DEPARTMENT OF ROADS, MINISTRY OF INFRASTRUCTURE, THE GOVERNMENT OF MONGOLIA
PACIFIC CONSULTANTS INTERNATIONAL JAPAN OVERSEAS CONSULTANTS	

Drawing title	Scale	No
PLAN AND PROFILE (Alternative C-2)	H=1:10,000 V=1:1,000	E-25

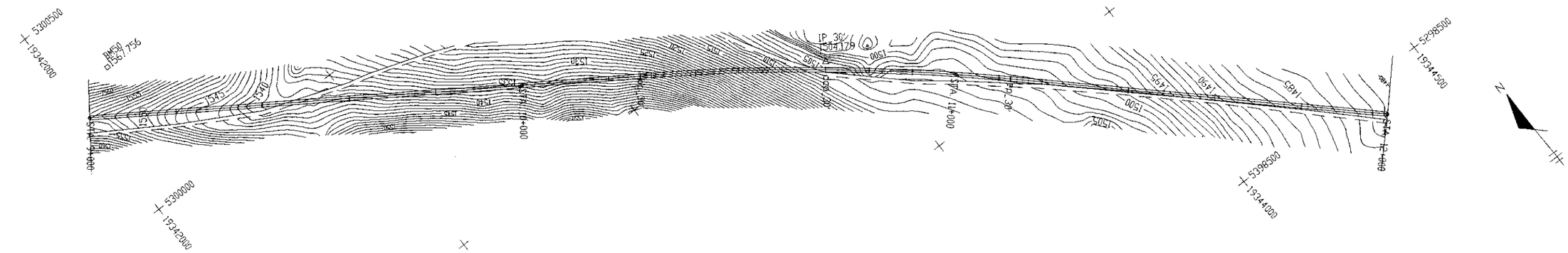

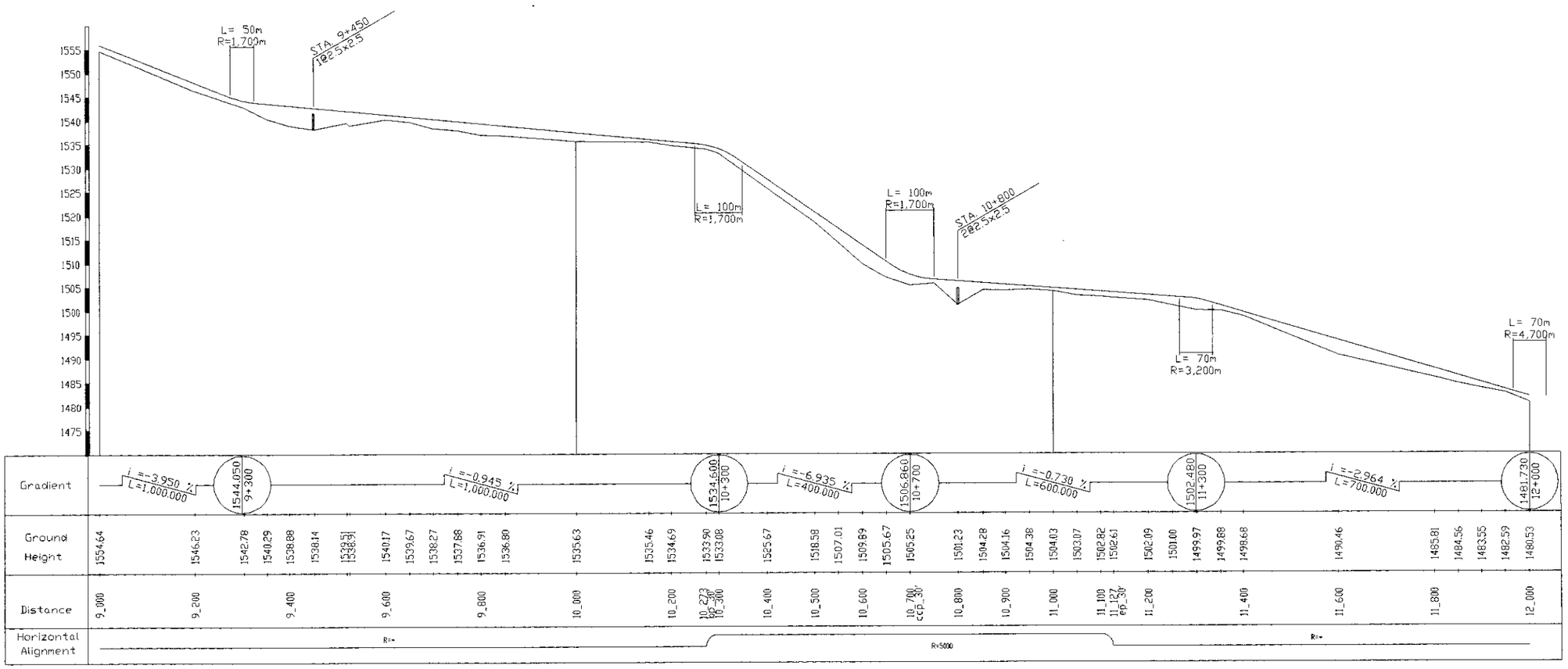

9_000 - 12_000

THE FEASIBILITY STUDY ON CONSTRUCTION OF EASTERN ARTERIAL ROAD IN MONGOLIA		
JAPAN INTERNATIONAL COOPERATION AGENCY (JICA)	DEPARTMENT OF ROADS, MINISTRY OF INFRASTRUCTURE, THE GOVERNMENT OF MONGOLIA	
PACIFIC CONSULTANTS INTERNATIONAL JAPAN OVERSEAS CONSULTANTS		
Drawing title	Scale	No.
PLAN AND PROFILE (Alternative C-2)	H=1:10,000 V=1:1,000	E-26

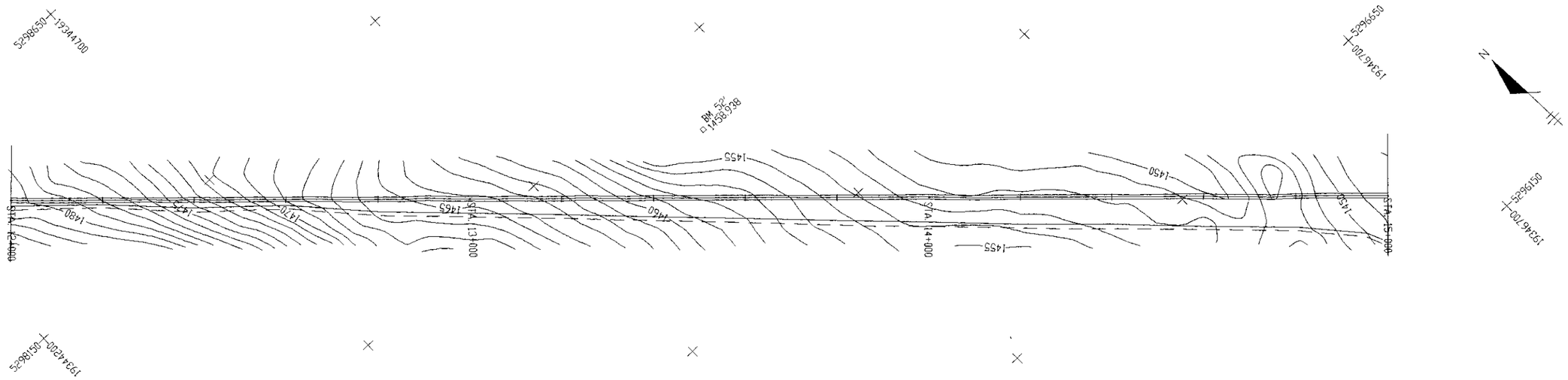

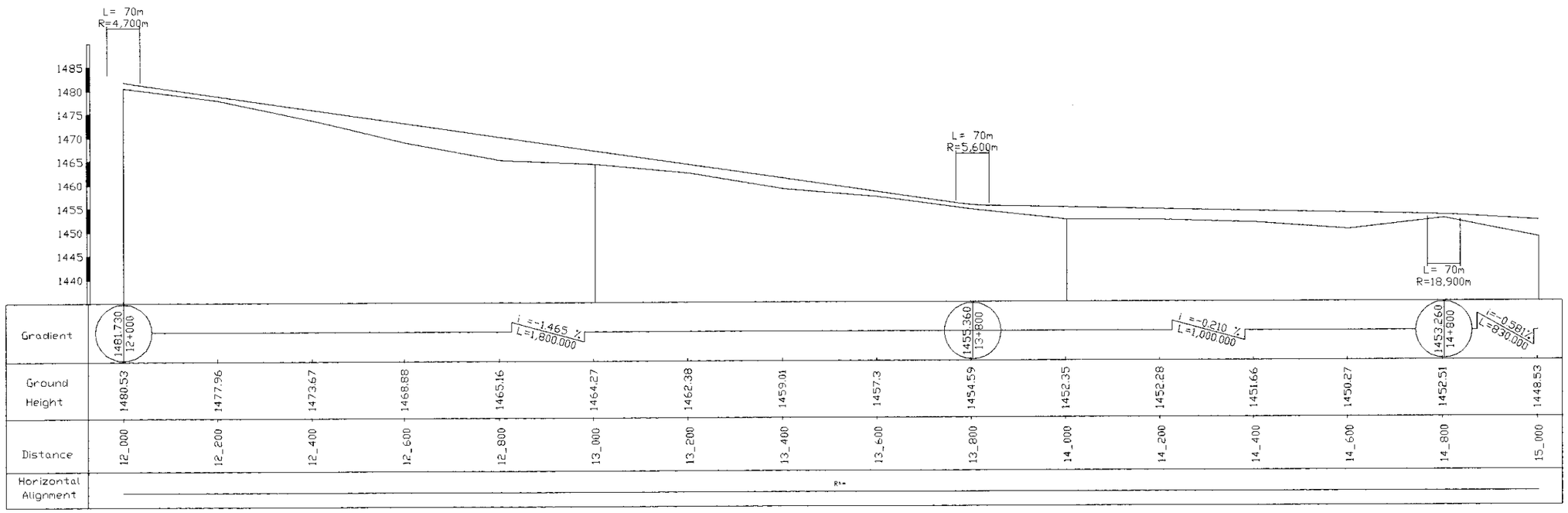

12_000 - 15_000

THE FEASIBILITY STUDY ON CONSTRUCTION OF EASTERN ARTERIAL ROAD IN MONGOLIA		
JAPAN INTERNATIONAL COOPERATION AGENCY (JICA)	DEPARTMENT OF ROADS, MINISTRY OF INFRASTRUCTURE, THE GOVERNMENT OF MONGOLIA	
PACIFIC CONSULTANTS INTERNATIONAL JAPAN OVERSEAS CONSULTANTS		
Drawing title	Scale	No.
PLAN AND PROFILE (Alternative C-2)	H=1:10,000 V=1:1,000	E-27

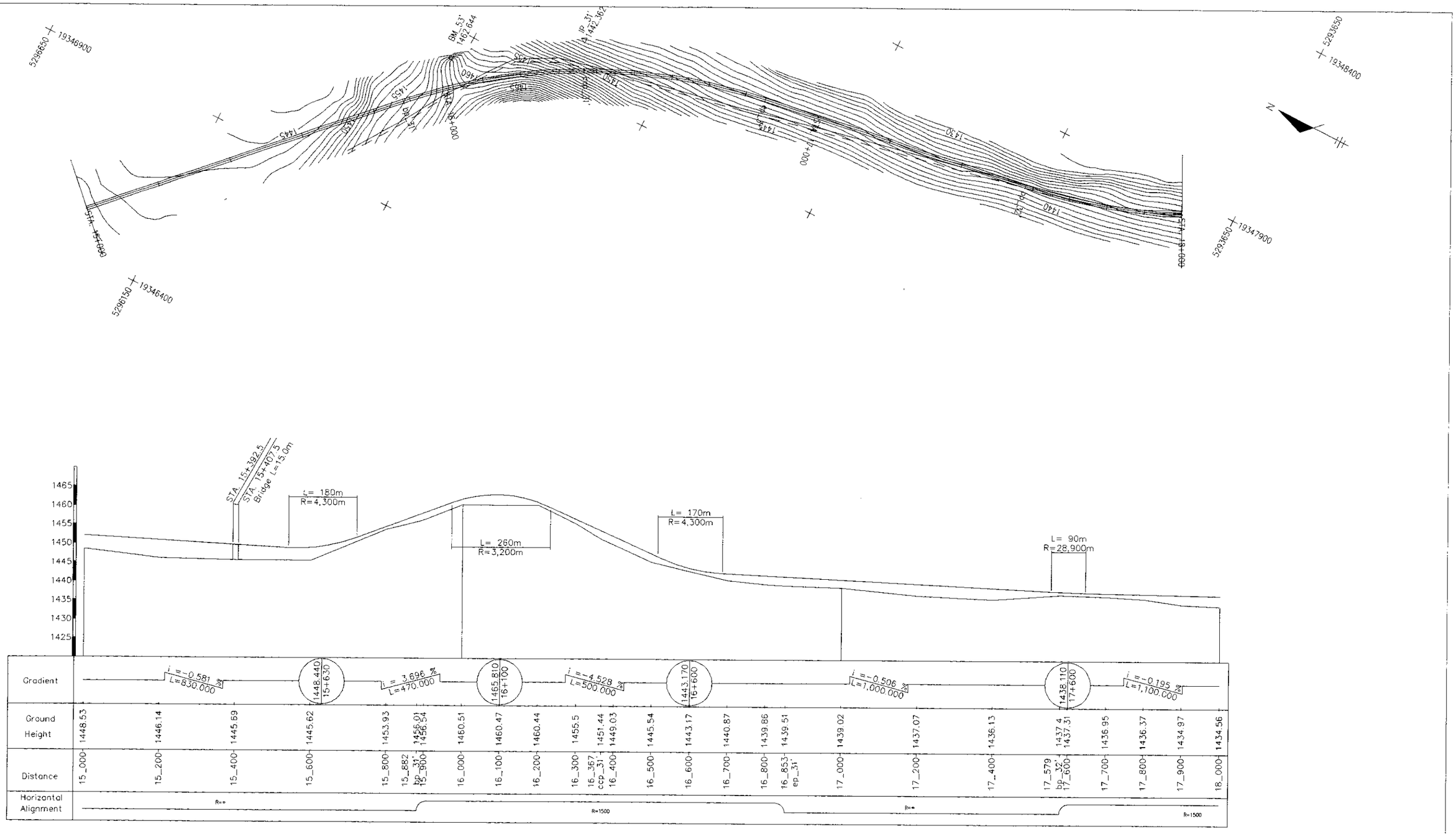

15_000 – 18_000

THE FEASIBILITY STUDY ON CONSTRUCTION OF EASTERN ARTERIAL ROAD IN MONGOLIA		
JAPAN INTERNATIONAL COOPERATION AGENCY (JICA)	DEPARTMENT OF ROADS, MINISTRY OF INFRASTRUCTURE, THE GOVERNMENT OF MONGOLIA	
PACIFIC CONSULTANTS INTERNATIONAL JAPAN OVERSEAS CONSULTANTS		
Drawing title	Scale	No
PLAN AND PROFILE (Alternative C-2)	H=1:10,000 V=1:1,000	E-28

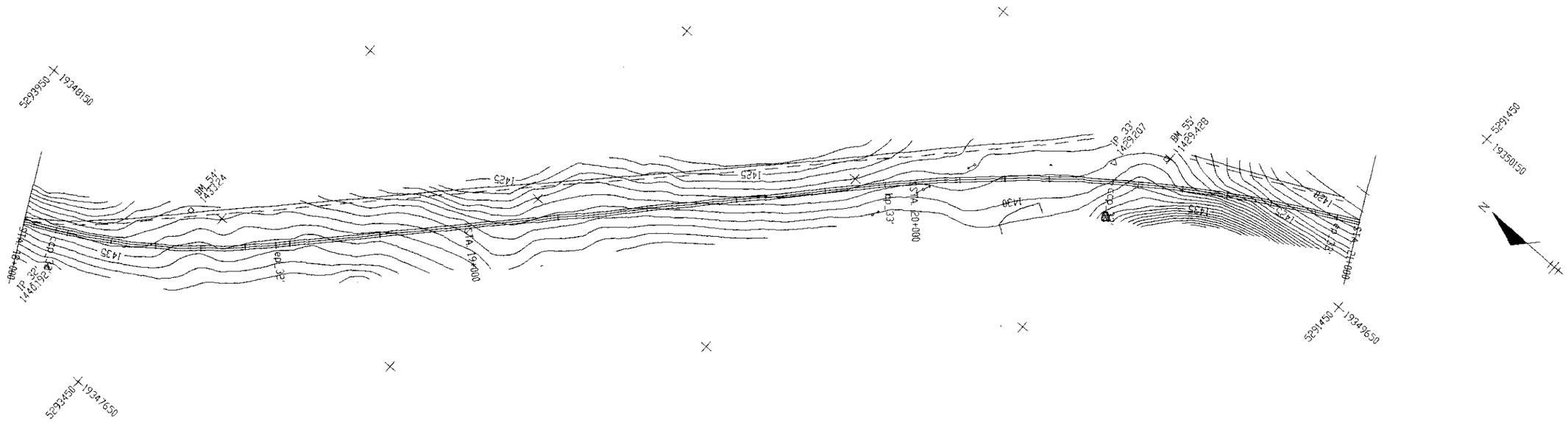

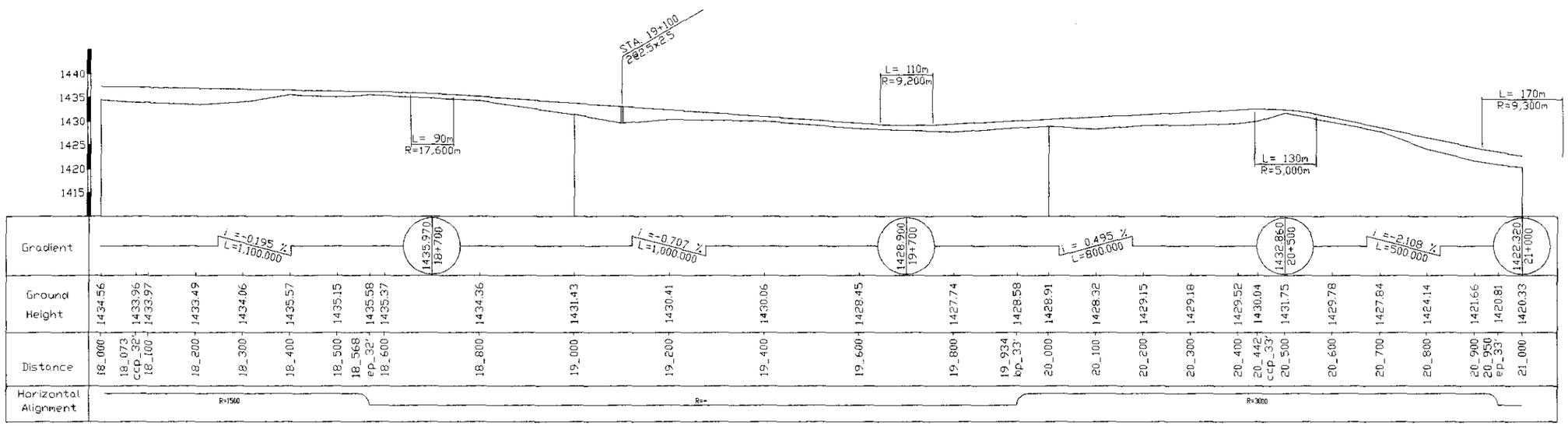

18_000 - 21_000

THE FEASIBILITY STUDY ON CONSTRUCTION OF EASTERN ARTERIAL ROAD IN MONGOLIA		
JAPAN INTERNATIONAL COOPERATION AGENCY (JICA)	DEPARTMENT OF ROADS, MINISTRY OF INFRASTRUCTURE, THE GOVERNMENT OF MONGOLIA	
PACIFIC CONSULTANTS INTERNATIONAL JAPAN OVERSEAS CONSULTANTS		
Drawing title	Scale	No.
PLAN AND PROFILE (Alternative C-2)	H=1:10,000 V=1:1,000	E-29

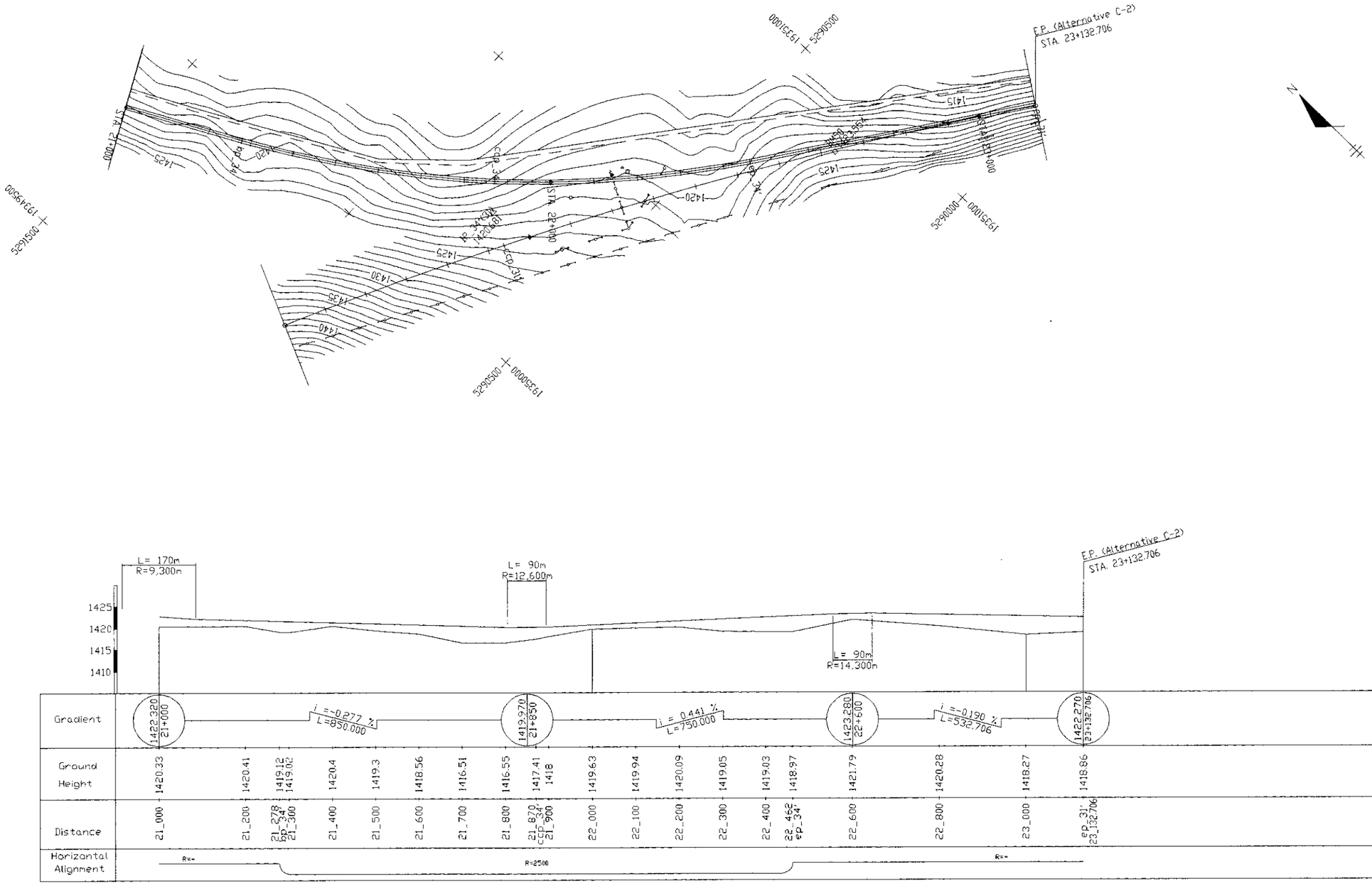

21_000 - 23_132 706

THE FEASIBILITY STUDY ON CONSTRUCTION OF EASTERN ARTERIAL ROAD IN MONGOLIA		
JAPAN INTERNATIONAL COOPERATION AGENCY (JICA)	DEPARTMENT OF ROADS, MINISTRY OF INFRASTRUCTURE, THE GOVERNMENT OF MONGOLIA	
PACIFIC CONSULTANTS INTERNATIONAL JAPAN OVERSEAS CONSULTANTS		
Drawing title	Scale	No.
PLAN AND PROFILE (Alternative C-2)	H=1:10,000 V=1:1,000	E-30

GENERAL VIEW OF TAL BULAG RIVER BRIDGE (B'-1)
(ALTERNATIVE ROUTE)

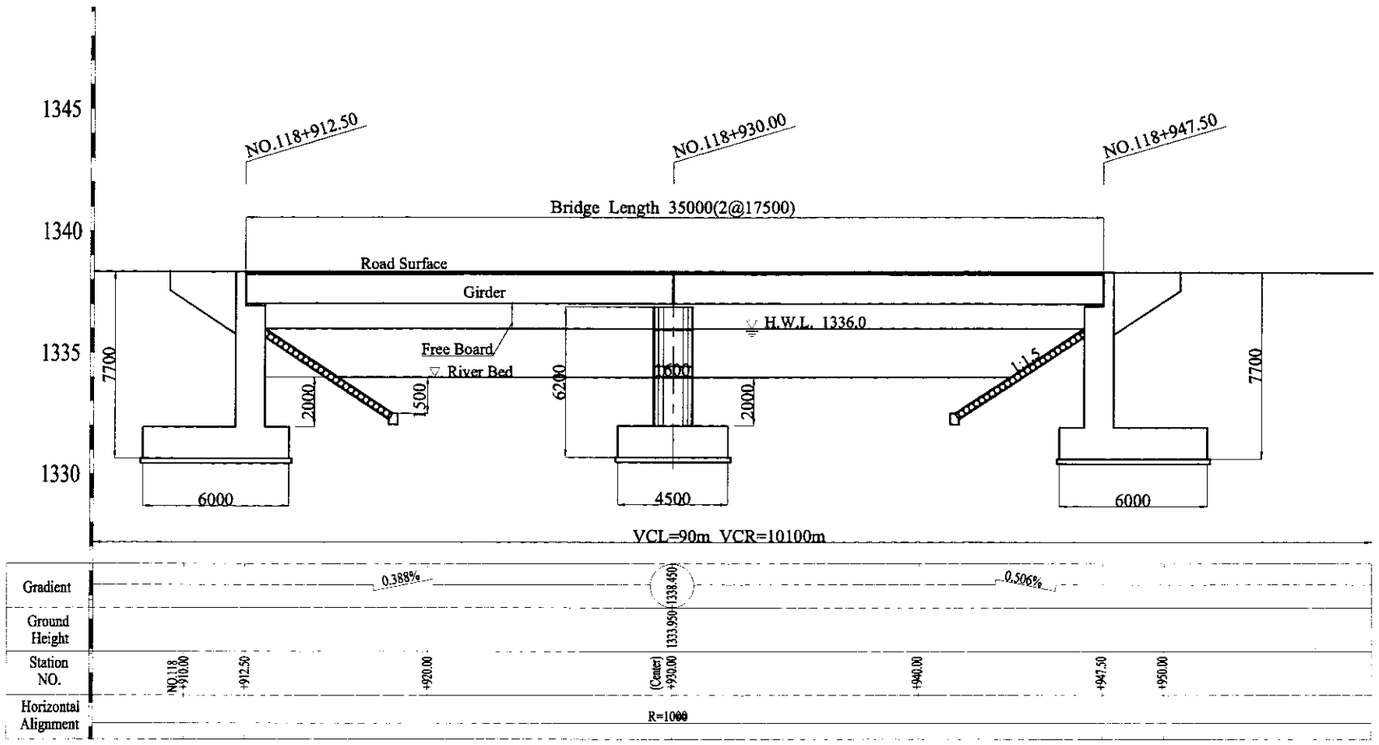

PROFILE S=1:250

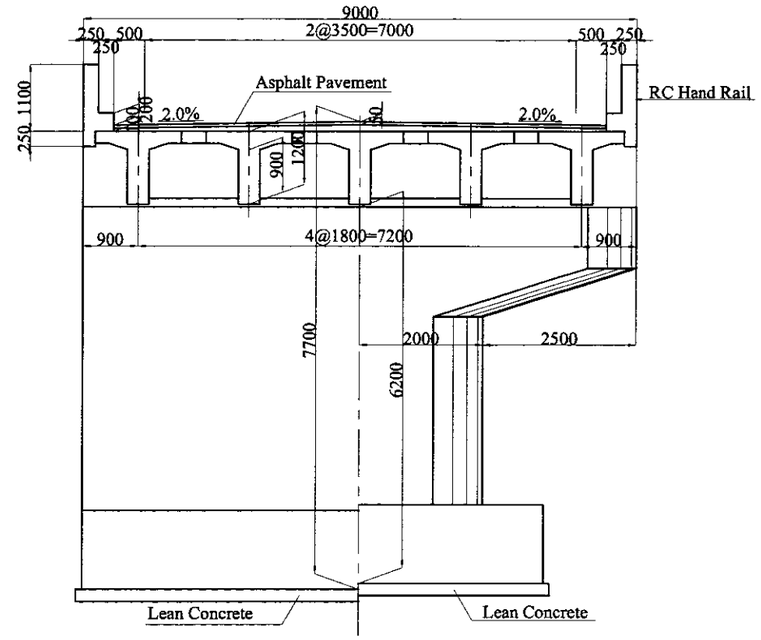

Abutment Pier

SECTION S=1:100

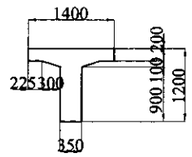

SECTION OF GIRDER S=1:100

DESIGN CRITERIA

GENERAL CONDITION		
Design Speed	V=100km/h	
Bridge Length (Span Length)	35.00m (2@17.50m)	
Total Width	9.00m	
Longitudinal Gradient	0.388% ╲ 0.506% ╲	
Cross-fall of Carriage way	2.0%	
Superstructure Type	RC-T Shape Girder	
Substructure Type	Abutment	RC Reversed T-Shape
	Pier	RC Wall (Cantilever-beam)
Foundation Type	Spread	

Note: Preliminary Design (Feasibility Study) has been done for this drawing. Detail Design is required for construction of this bridge.

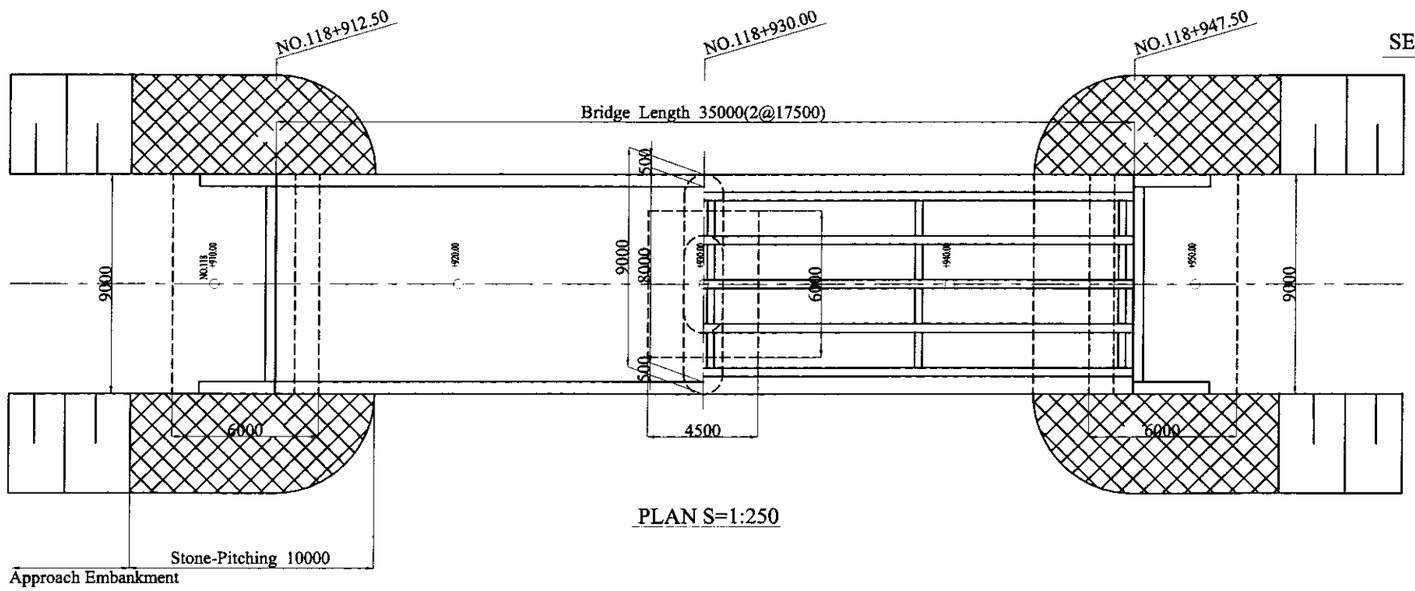

PLAN S=1:250

LIST OF QUANTITY (FOR RC GIRDER)

Category	Material	Unit	Quantity	Specification
Super Structure	Total Concrete	m3	164	σ28=240kgf/cm2
No. of Girder	Reinforcing Bar	ton	21.2	SD295,345,390
(10)	Leveling Concrete	m3	25.2	σ28=240kgf/cm2
	Asphalt Pavement	m2	280	t=5cm
Sub Structure	Total Concrete	m3	324	σ28=210kgf/cm2
	Reinforcing Bar	ton	19.5	SD295,345,390
	Lean Concrete	m3	28.6	σ28=160kgf/cm2
	Excavation	m3	2001	Gravel
Embankment	Revetment	m2	386	Stone Pitched Embankment
	Access Road	m	70	Paved Standard Section

THE FEASIBILITY STUDY ON CONSTRUCTION OF EASTERN ARTERIAL ROAD IN MONGOLIA

JAPAN INTERNATIONAL COOPERATION AGENCY (JICA)

PACIFIC CONSULTANTS INTERNATIONAL
JAPAN OVERSEAS CONSULTANTS

DEPARTMENT OF ROADS,
MINISTRY OF INFRASTRUCTURE,
THE GOVERNMENT OF MONGOLIA

Drawing title	Scale	No.
GENERAL VIEW OF TAL BULAG RIVER BRIDGE (B'-1) (ALTERNATIVE ROUTE)	As shown	E-31

GENERAL VIEW OF TAL BULAG, KHUJIRT RIVER BRIDGE (B'-2)
(ALTERNATIVE ROUTE)

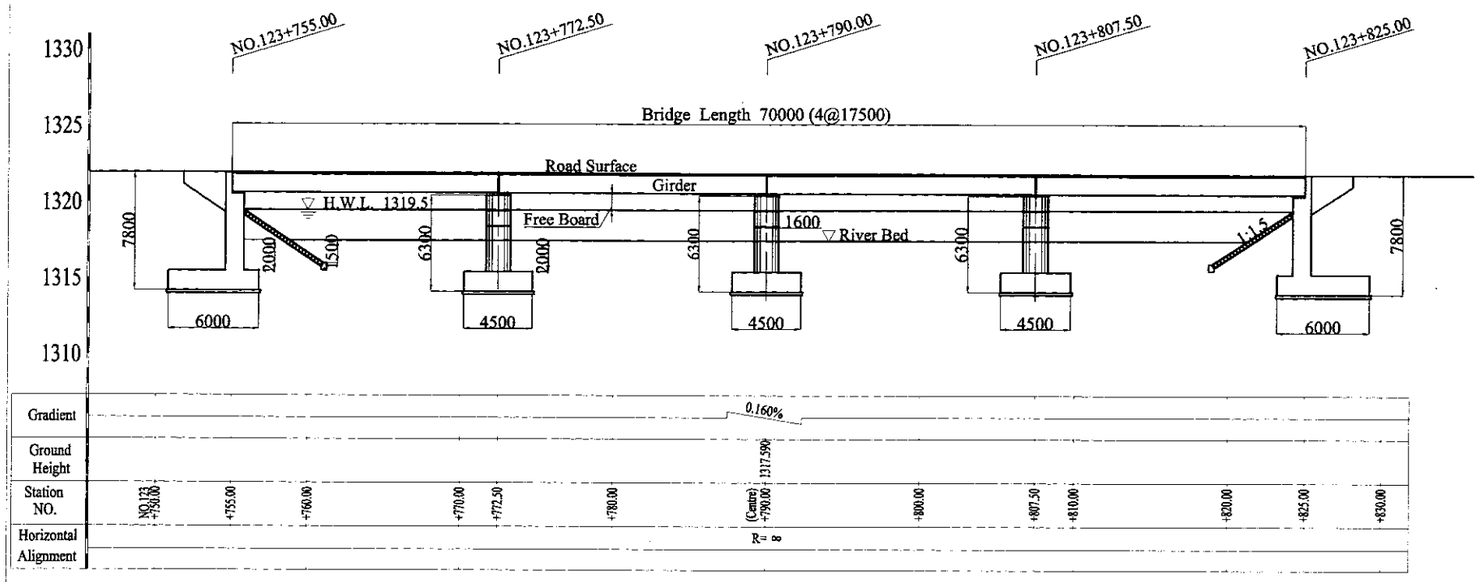

PROFILE S=1:400

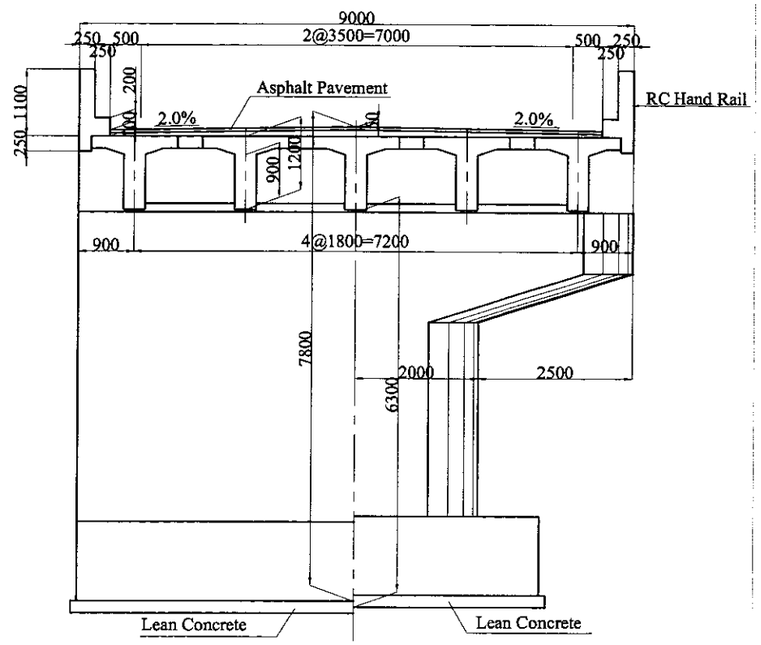

SECTION S=1:100

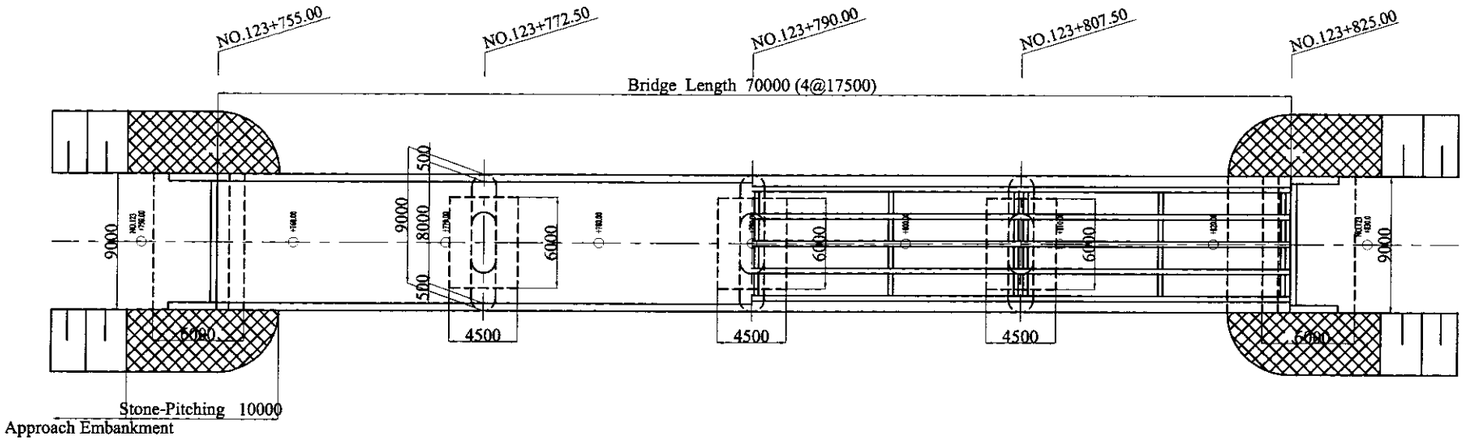

PLAN S=1:400

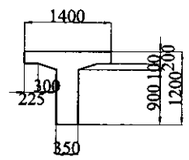

SECTION OF GIRDER S=1:100

LIST OF QUANTITY (FOR RC GIRDER)

Category	Material	Unit	Quantity	Specification
Super Structure No. of Girder (20)	Total Concrete	m3	328	σ28=240kgf/cm2
	Reinforcing Bar	ton	42.5	SD295,345,390
	Leveling Concrete	m3	50.4	σ28=240kgf/cm2
	Asphalt Pavement	m2	560	t=5cm
Sub Structure	Total Concrete	m3	473	σ28=210kgf/cm2
	Reinforcing Bar	ton	28.4	SD295,345,390
	Lean Concrete	m3	40.3	σ28=160kgf/cm2
	Excavation	m3	2586	Gravel
Embankment	Revetment	m2	386	Stone Pitched Embankment
	Access Road	m	140	Paved Standard Section

DESIGN CRITERIA

GENERAL CONDITION		
Design Speed	V=100km/h	
Bridge Length (Span Length)	70.00m (4@17.50m)	
Total Width	9.00m	
Longitudinal Gradient	0.160%	
Cross-fall of Carriage way	2.0%	
Superstructure Type	RC-T Shape Girder	
Substructure Type	Abutment	RC Reversed T-Shape
	Pier	RC Wall (Cantilever-beam)
Foundation Type	Spread	

Note: Preliminary Design (Feasibility Study) has been done for this drawing.
Detail Design is required for construction of this bridge.

THE FEASIBILITY STUDY ON CONSTRUCTION OF EASTERN ARTERIAL ROAD IN MONGOLIA

JAPAN INTERNATIONAL COOPERATION AGENCY (JICA)

PACIFIC CONSULTANTS INTERNATIONAL
JAPAN OVERSEAS CONSULTANTS

DEPARTMENT OF ROADS,
MINISTRY OF INFRASTRUCTURE,
THE GOVERNMENT OF MONGOLIA

Drawing title	Scale	No.
GENERAL VIEW OF TAL BULAG, KHUJIRT RIVER BRIDGE (B'-2) (ALTERNATIVE ROUTE)	As shown	E-32

GENERAL VIEW OF KHUTSAA, NARIIN RIVER BRIDGE (B'-3)
(ALTERNATIVE ROUTE)

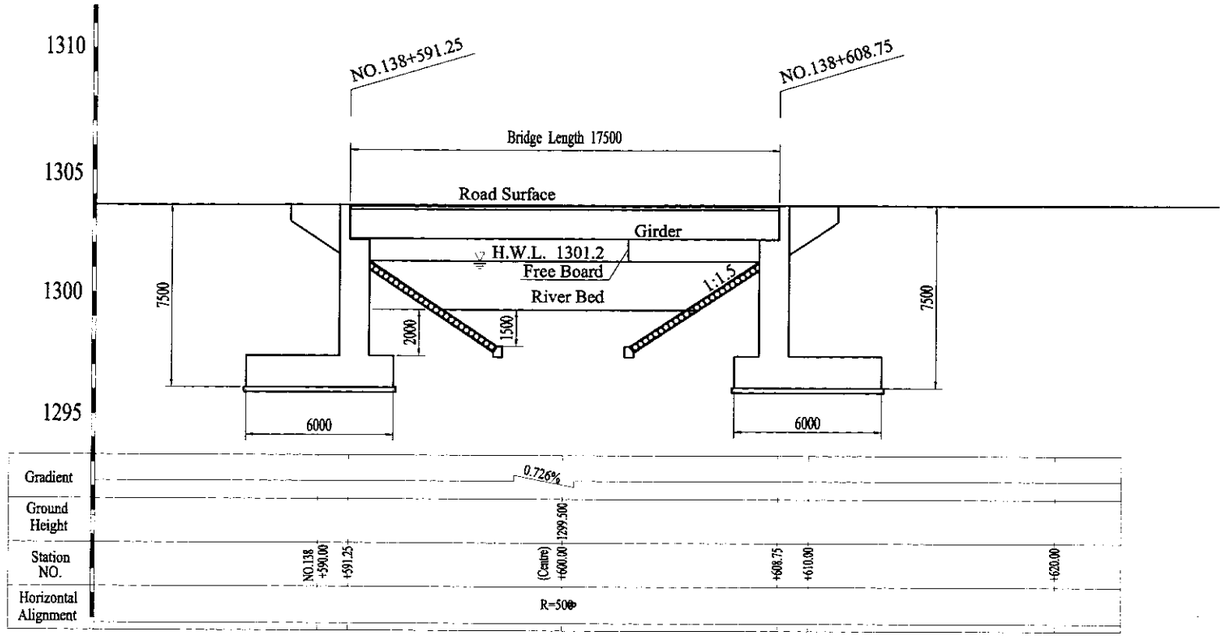

PROFILE S=1:250

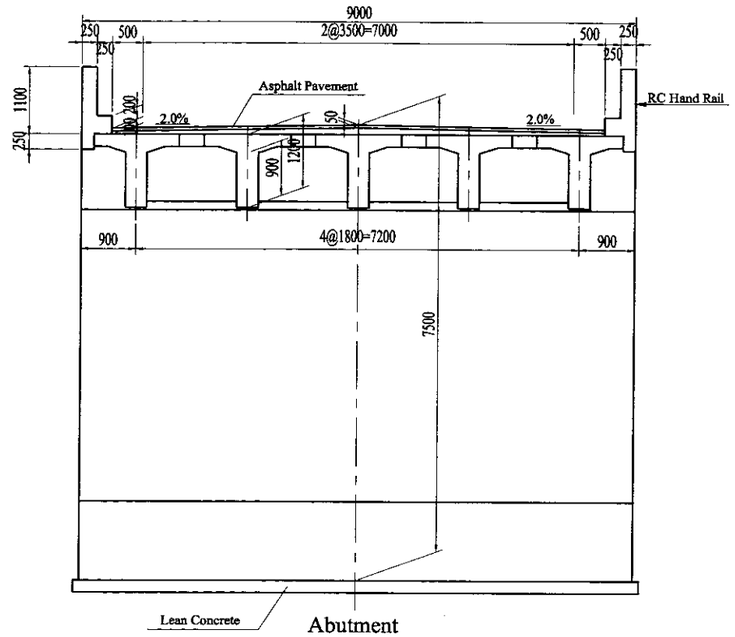

SECTION S=1:100

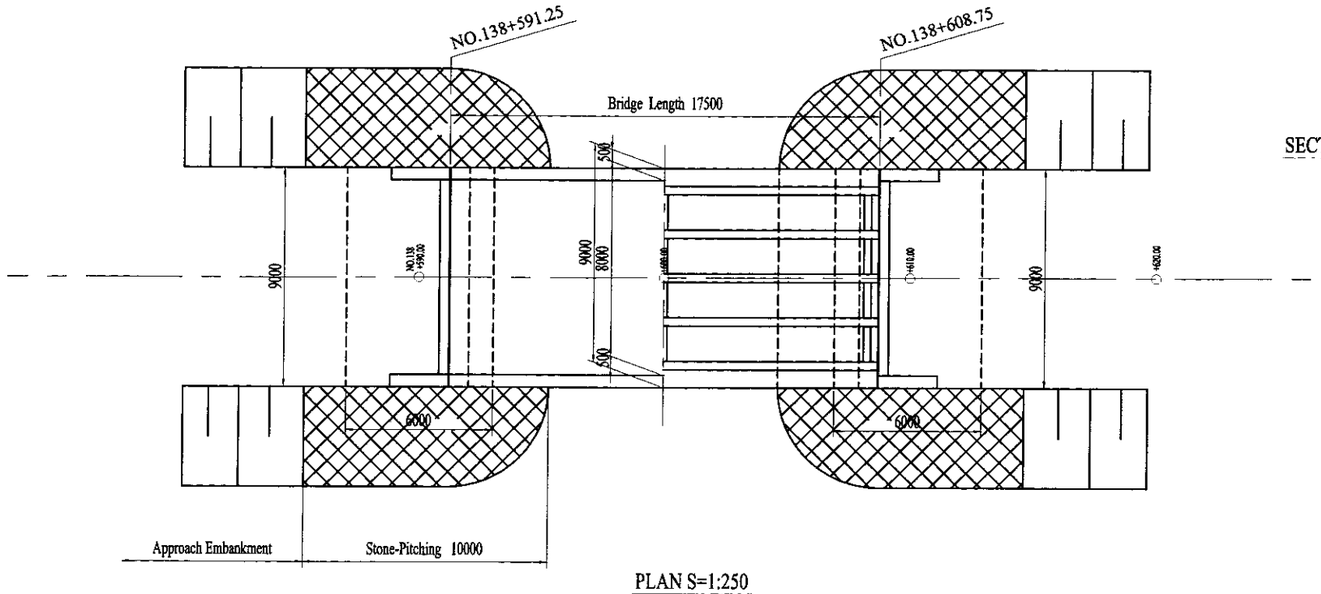

PLAN S=1:250

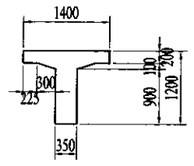

SECTION OF GIRDER S=1:100

DESIGN CRITERIA

GENERAL CONDITION		
Design Speed	V=80 km/h	
Bridge Length	17.50m	
Total Width	9.00m	
Longitudinal Gradient	0.726%	
Cross-fall of Carriage way	2.0%	
Superstructure Type	RC-T Shape Girder	
Substructure Type	Abutment	RC Reversed T-Shape
Foundation Type	Spread	

Note: Preliminary Design (Feasibility Study) has been done for this drawing. Detail Design is required for construction of this bridge.

LIST OF QUANTITY (FOR RC GIRDER)

Category	Material	Unit	Quantity	Specification
Super Structure	Total Concrete	m3	82	σ28=240kgf/cm2
No. of Girder	Reinforcing Bar	ton	10.6	SD295,345,390
(5)	Leveling Concrete	m3	12.6	σ28=240kgf/cm2
	Asphalt Pavement	m2	140	t=5cm
Sub Structure	Total Concrete	m3	250	σ28=210kgf/cm2
	Reinforcing Bar	ton	15.0	SD295,345,390
	Lean Concrete	m3	22.8	σ28=160kgf/cm2
	Excavation	m3	1709	Gravel
Embankment	Revetment	m2	386	Stone Pitched Embankment
	Access Road	m	35	Paved Standard Section

THE FEASIBILITY STUDY ON CONSTRUCTION OF EASTERN ARTERIAL ROAD IN MONGOLIA

JAPAN INTERNATIONAL COOPERATION AGENCY (JICA)

PACIFIC CONSULTANTS INTERNATIONAL
JAPAN OVERSEAS CONSULTANTS

DEPARTMENT OF ROADS,
MINISTRY OF INFRASTRUCTURE,
THE GOVERNMENT OF MONGOLIA

Drawing title	Scale	No.
GENERAL VIEW OF KHUTSAA, NARIIN RIVER BRIDGE (B'-3) (ALTERNATIVE ROUTE)	As shown	E-33

GENERAL VIEW OF UST VALLEY BRIDGE (B'-4)
(ALTERNATIVE ROUTE)

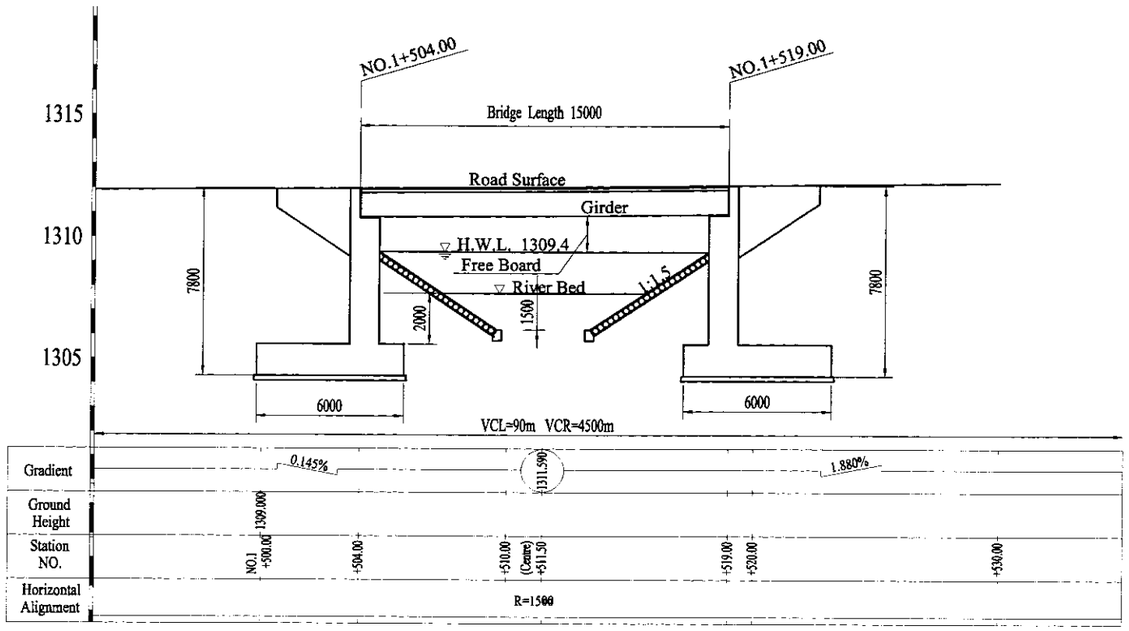

PROFILE S=1:250

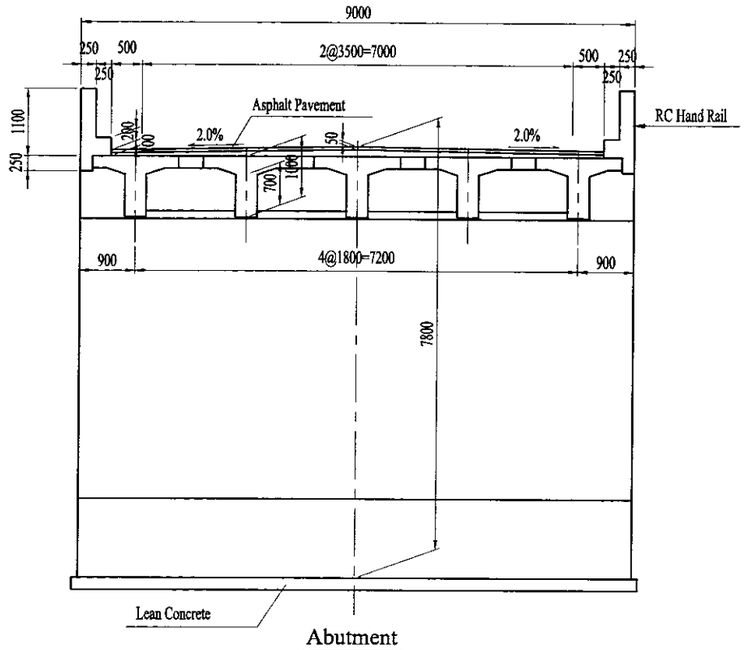

SECTION S=1:100

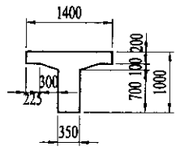

SECTION OF GIRDER S=1:100

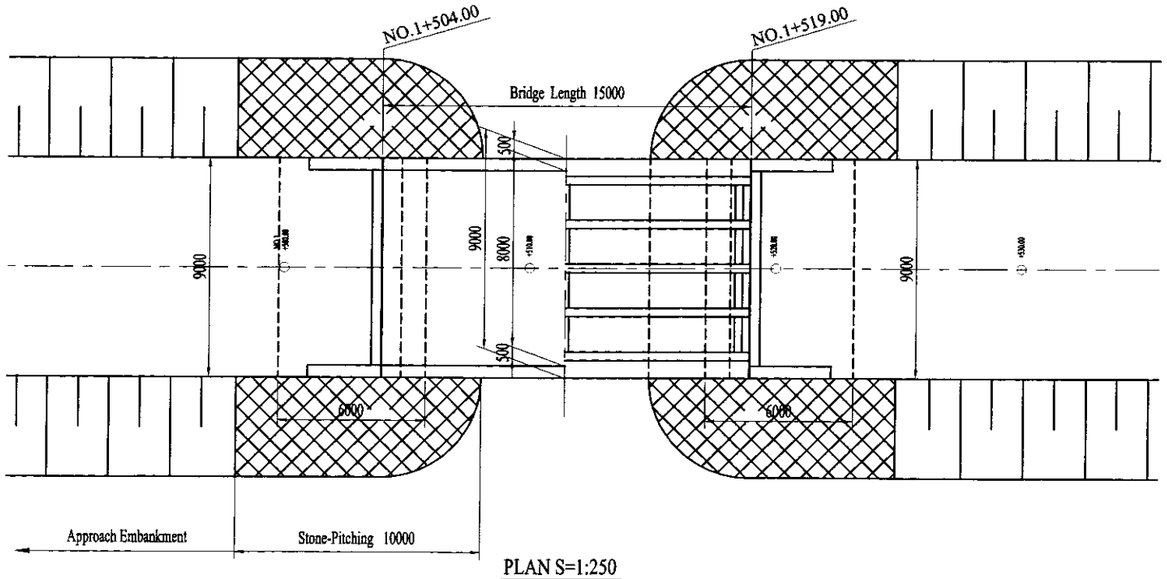

PLAN S=1:250

DESIGN CRITERIA

GENERAL CONDITION		
Design Speed	V=80km/h	
Bridge Length	15.00m	
Total Width	9.00m	
Longitudinal Gradient	0.145% ↘	1.888% ↗
Cross-fall of Carriage way	2.0%	
Superstructure Type	RC-T Shape Girder	
Substructure Type	Abutment	RC Reversed T-Shape
Foundation Type	Spread	

Note: Preliminary Design (Feasibility Study) has been done for this drawing. Detail Design is required for construction of this bridge.

LIST OF QUANTITY (FOR RC GIRDER)

Category	Material	Unit	Quantity	Specification
Super Structure	Total Concrete	m3	65	σ28=240kgf/cm2
No. of Girder	Reinforcing Bar	ton	8.3	SD295,345,390
(5)	Leveling Concrete	m3	10.8	σ28=240kgf/cm2
	Asphalt Pavement	m2	120	t=5cm
Sub Structure	Total Concrete	m3	248	σ28=210kgf/cm2
	Reinforcing Bar	ton	14.9	SD295,345,390
	Lean Concrete	m3	22.8	σ28=160kgf/cm2
	Excavation	m3	1662	Gravel
Embankment	Revetment	m2	386	Stone Pitched Embankment
	Access Road	m	30	Paved Standard Section

THE FEASIBILITY STUDY ON CONSTRUCTION OF EASTERN ARTERIAL ROAD IN MONGOLIA

JAPAN INTERNATIONAL COOPERATION AGENCY (JICA)

PACIFIC CONSULTANTS INTERNATIONAL
JAPAN OVERSEAS CONSULTANTS

DEPARTMENT OF ROADS,
MINISTRY OF INFRASTRUCTURE,
THE GOVERNMENT OF MONGOLIA

Drawing title	Scale	No.
GENERAL VIEW OF UST VALLEY BRIDGE (B'-4) (ALTERNATIVE ROUTE)	As shown	E-34

GENERAL VIEW OF BOR KHUJIR VALLEY BRIDGE (B'-5)
(ALTERNATIVE ROUTE)

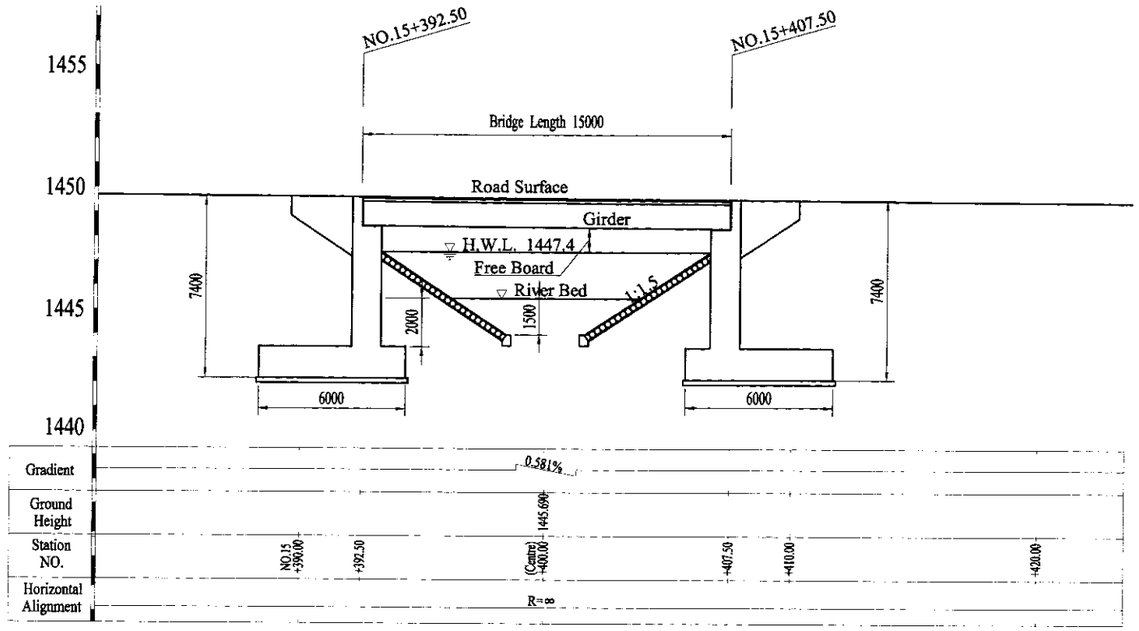

PROFILE S=1:250

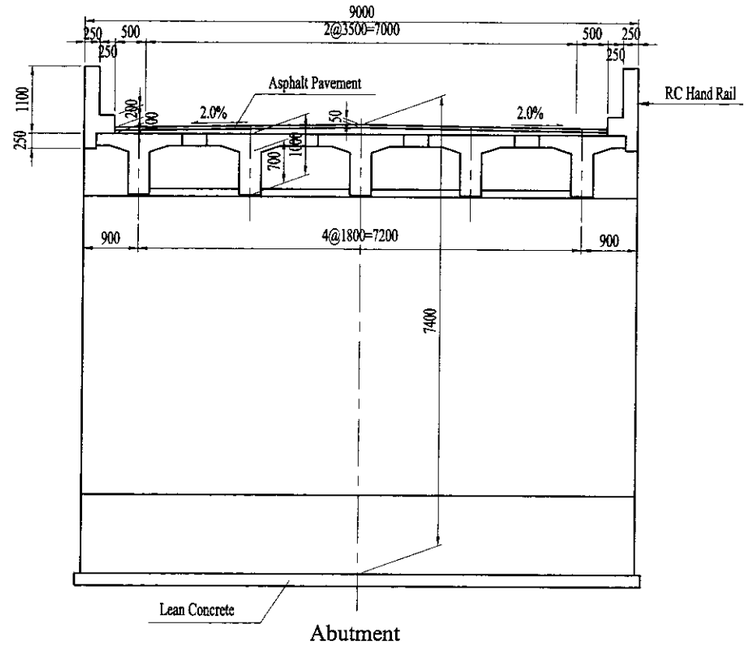

SECTION S=1:100

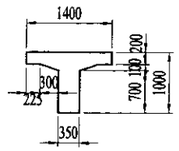

SECTION OF GIRDER S=1:100

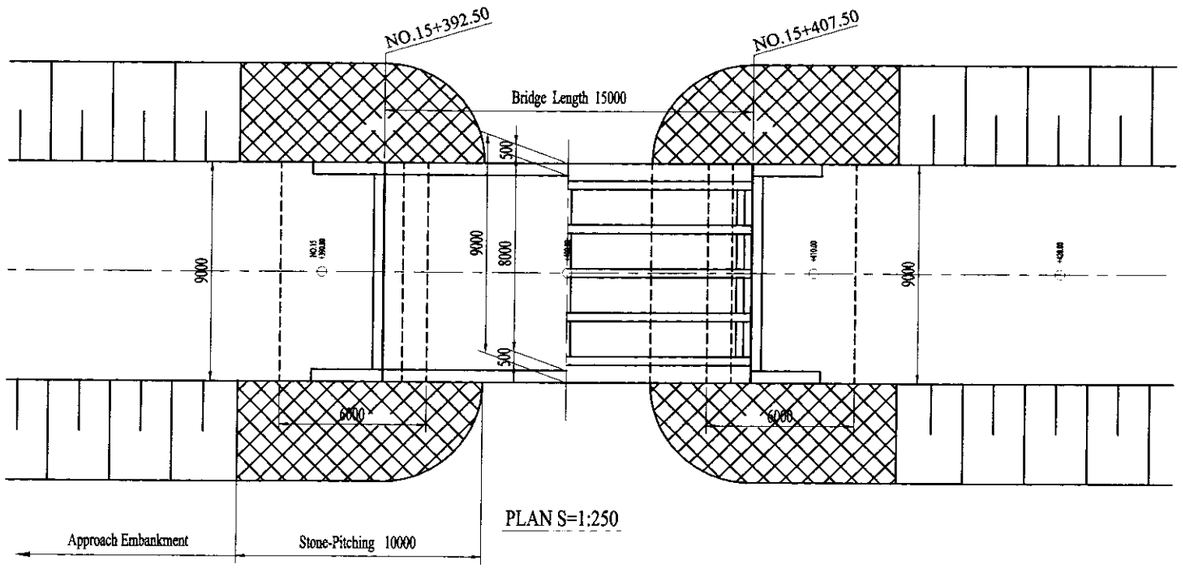

PLAN S=1:250

DESIGN CRITERIA

GENERAL CONDITION		
Design Speed	V=80km/h	
Bridge Length	15.00m	
Total Width	9.00m	
Longitudinal Gradient	0.581%	
Cross-fall of Carriage way	2.0%	
Superstructure Type	RC-T Shape Girder	
Substructure Type	Abutment	RC Reversed T-Shape
Foundation Type	Spread	

Note: Preliminary Design (Feasibility Study) has been done for this drawing. Detail Design is required for construction of this bridge.

LIST OF QUANTITY (FOR RC GIRDER)

Category	Material	Unit	Quantity	Specification
Super Structure	Total Concrete	m3	65	σ28=240kgf/cm2
No. of Girder	Reinforcing Bar	ton	8.3	SD295,345,390
(5)	Leveling Concrete	m3	10.8	σ28=240kgf/cm2
	Asphalt Pavement	m2	120	t=5cm
Sub Structure	Total Concrete	m3	248	σ28=210kgf/cm2
	Reinforcing Bar	ton	14.9	SD295,345,390
	Lean Concrete	m3	22.8	σ28=160kgf/cm2
	Excavation	m3	1662	Gravel
Embankment	Revetment	m2	386	Stone Pitched Embankment
	Access Road	m	30	Paved Standard Section

THE FEASIBILITY STUDY ON CONSTRUCTION OF EASTERN ARTERIAL ROAD IN MONGOLIA

JAPAN INTERNATIONAL COOPERATION AGENCY (JICA)

PACIFIC CONSULTANTS INTERNATIONAL
JAPAN OVERSEAS CONSULTANTS

DEPARTMENT OF ROADS,
MINISTRY OF INFRASTRUCTURE,
THE GOVERNMENT OF MONGOLIA

Drawing title	Scale	No.
GENERAL VIEW OF BOR KHUJIR VALLEY BRIDGE (B'-5) (ALTERNATIVE ROUTE)	As shown	E-35

GENERAL VIEW OF PIPE CULVERTS
(ALTERNATIVE ROUTE)

Profile 1:150

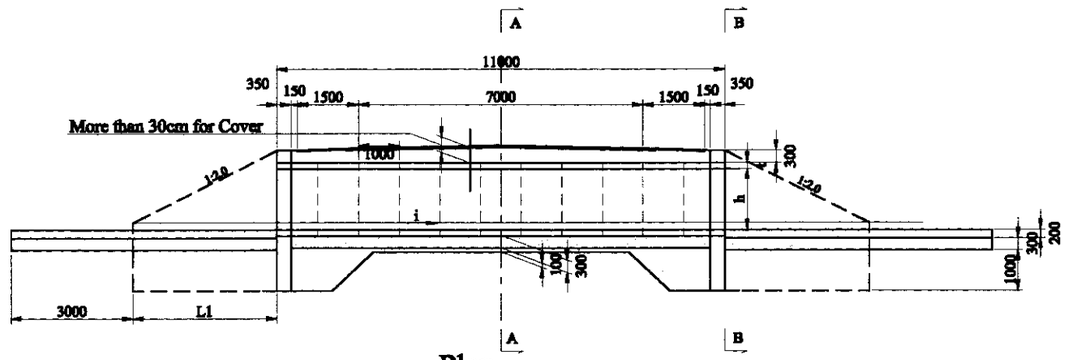

Plan

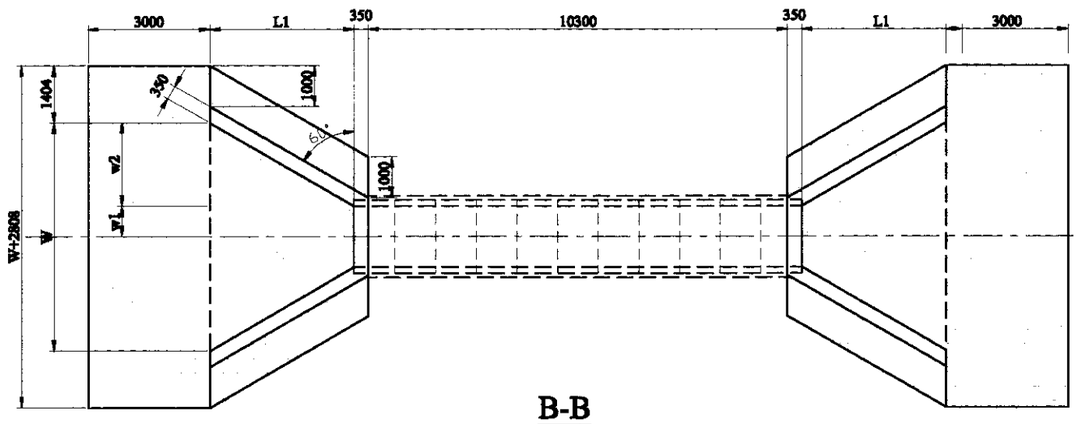

B-B

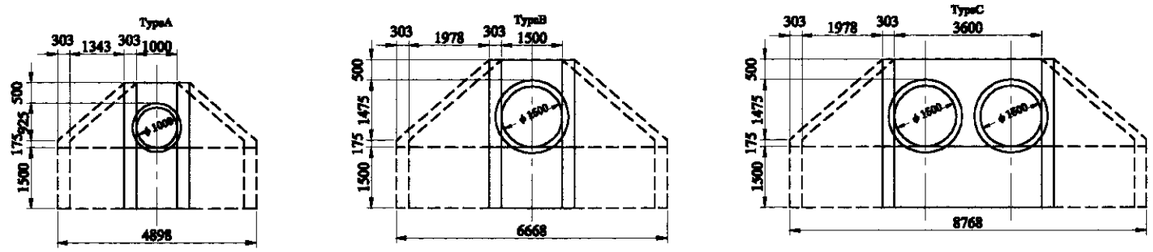

Legend
- Leveling Concrete
- Stone Pitching
- Gravel

Section A-A 1:100

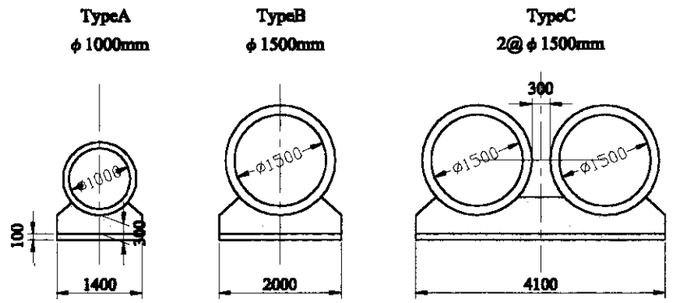

List of Quantity

		Type-A	Type-B	Type-C
Concrete : σ28=210kgf/cm2	m3	15.74	27.05	38.89
Reinforcing Bar : SD295(σy=3000kgf/cm2)	t	0.71	1.18	1.60
Leveling Concrete σ28=160kgf/cm2	m3	8.11	13.94	27.36
Gravel	m3	23.33	33.63	50.03
Stone Pitching	m²	52.47	68.78	81.38
Excavation	m3	54.10	79.34	119.71
h	m	1.000	1.500	1.500
t	m	0.100	0.150	0.150
L1	m	2.450	3.550	3.550
W	m	3.829	5.599	7.699
w1	m	0.500	0.750	1.800
w2	m	1.415	2.050	2.050

Note: Preliminary Design (Feasibility Study) has been done for this drawing. Detail Design is required for construction of these culverts.

THE FEASIBILITY STUDY ON CONSTRUCTION OF EASTERN ARTERIAL ROAD IN MONGOLIA		
JAPAN INTERNATIONAL COOPERATION AGENCY (JICA)	DEPARTMENT OF ROADS, MINISTRY OF INFRASTRUCTURE, THE GOVERNMENT OF MONGOLIA	
PACIFIC CONSULTANTS INTERNATIONAL, JAPAN OVERSEAS CONSULTANTS		
Drawing title	Scale	No.
GENERAL VIEW OF PIPE CULVERTS (ALTERNATIVE ROUTE)	As Shown	E-36

GENERAL VIEW OF BOX CULVERTS
(ALTERNATIVE ROUTE)

Profile 1:200

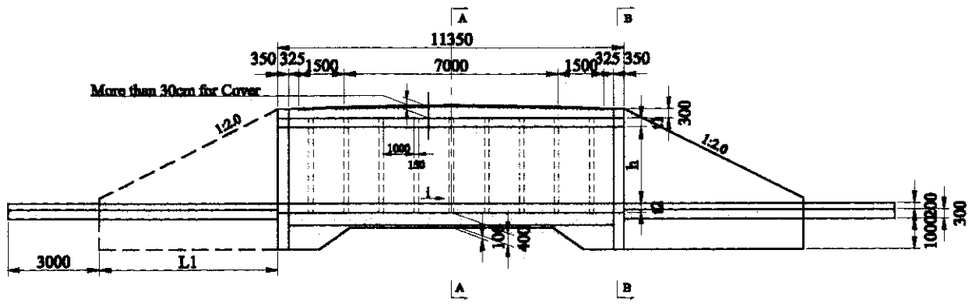

Plan 1:200

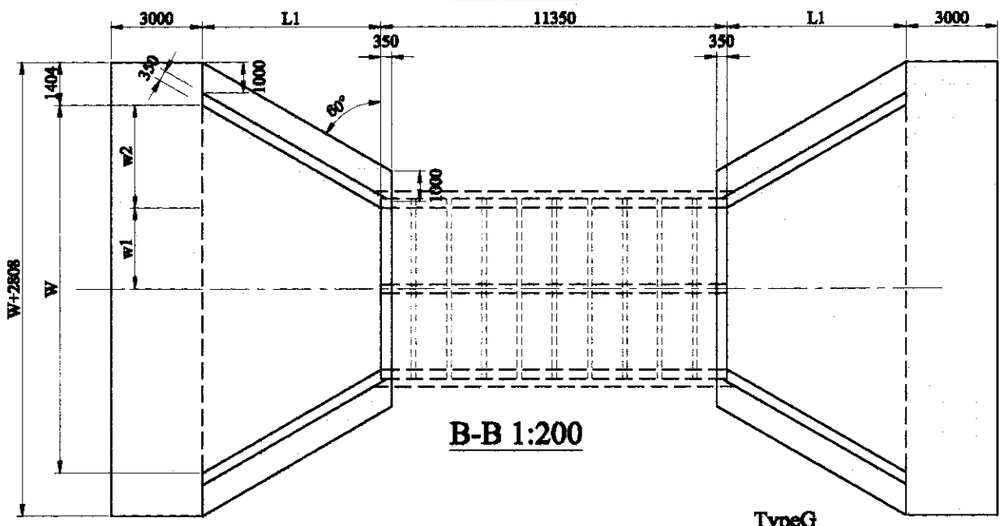

B-B 1:200

Section A-A 1:150

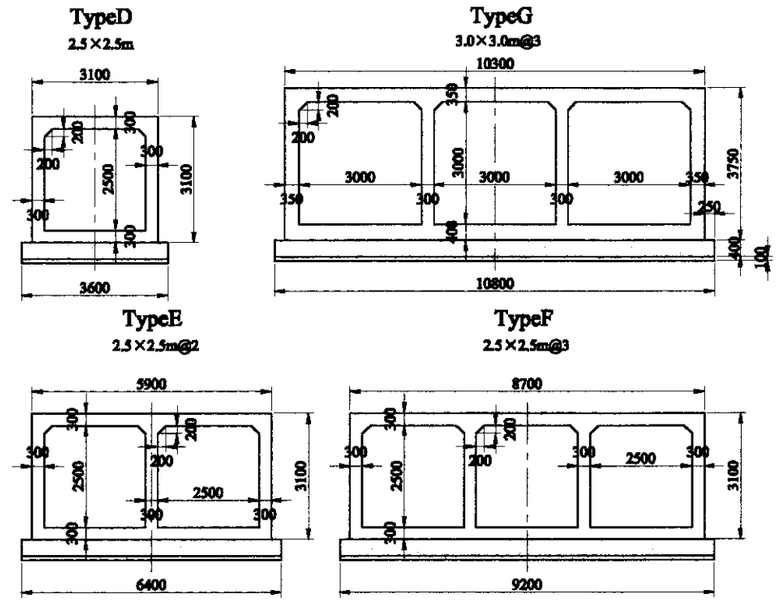

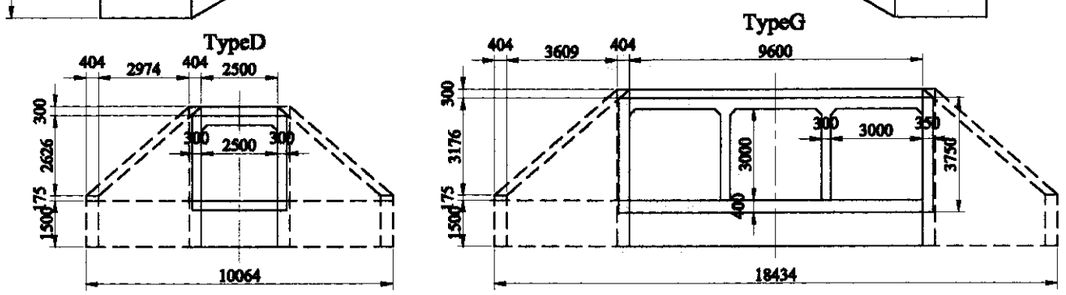

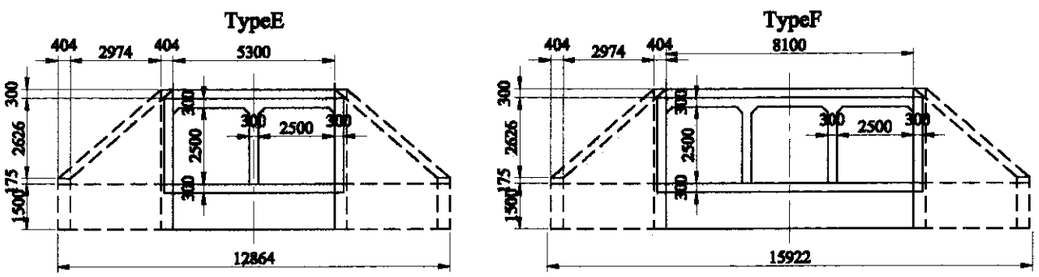

Legend
- Leveling Concrete
- Stone Pitching
- Gravel

List of Quantity

		Type-D	Type-E	Type-F	Type-G
Concrete (Pre-cast) : σ28=210kgf/cm2	m3	34.00	58.70	83.40	117.45
Reinforcing Bar (Pre-cast) : SD295(σy=3000kgf/cm2)	t	1.70	2.94	4.17	5.87
Concrete (Cast-in-situ) : σ28=210kgf/cm2	m3	37.52	43.79	50.07	64.29
Reinforcing Bar (Cast-in-situ) : SD295(σy=3000kgf/cm2)	t	1.88	2.19	2.50	3.21
Leveling Concrete σ28=160kgf/cm2	m3	29.09	47.57	66.05	83.85
Gravel	m3	58.97	82.70	106.43	130.70
Stone Pitching	m²	98.54	115.34	132.14	153.68
Excavation	m3	130.92	182.37	233.82	286.72
h	m	2.50	2.50	2.50	3.00
t1	m	0.30	0.30	0.30	0.35
t2	m	0.30	0.30	0.30	0.40
t3	m	0.30	0.30	0.30	0.30
L1	m	5.85	5.85	5.85	6.95
W	m	9.25	12.05	14.85	17.63
w1	m	1.25	2.65	4.05	4.80
w2	m	3.38	3.38	3.38	4.01

Note: Preliminary Design (Feasibility Study) has been done for this drawing. Detail Design is required for construction of these culverts.

THE FEASIBILITY STUDY ON CONSTRUCTION OF EASTERN ARTERIAL ROAD IN MONGOLIA

JAPAN INTERNATIONAL COOPERATION AGENCY (JICA)

PACIFIC CONSULTANTS INTERNATIONAL
JAPAN OVERSEAS CONSULTANTS

DEPARTMENT OF ROADS,
MINISTRY OF INFRASTRUCTURE,
THE GOVERNMENT OF MONGOLIA

Drawing title	Scale	No.
GENERAL VIEW OF BOX CULVERTS (ALTERNATIVE ROUTE)	As Shown	E-37