6.6. Outline of Plant

6.6.1. Expected Performance of Plant

The performance of gas turbine combined cycle power plant applying the standard gas turbines is as follows;

(1) At Natural Gas Firing

• Gross output	Gas turbines	61,800 kW (3 × 20,600 kW)
	Steam turbine	28,200 kW
	Total	90,000 kW
• Net plant output		87,400 kW
• Heat rate (LHV)	At generator terminal	7,205 kJ/kWh (1,721 kcal/kWh)
	At send out point	7,419 kJ/kWh (1,772 kcal/kWh)

Fig.6.6-1 shows the preliminary heat balance of gas turbine combined cycle power plant at natural gas firing.

(2) At Diesel Oil Firing

• Gross output	Gas turbines	60,000 kW (3 × 20,000 kW)
	Steam turbine	25,700 kW
	Total	85,700 kW
• Net plant output		83,100 kW
• Heat rate (LHV)	At generator terminal	7,418 kJ/kWh (1,772 kcal/kWh)
	At send out point	7,650 kJ/kWh (1,827 kcal/kWh)

Fig.6.6-2 shows the preliminary heat balance of gas turbine combined cycle power plant at diesel oil firing.

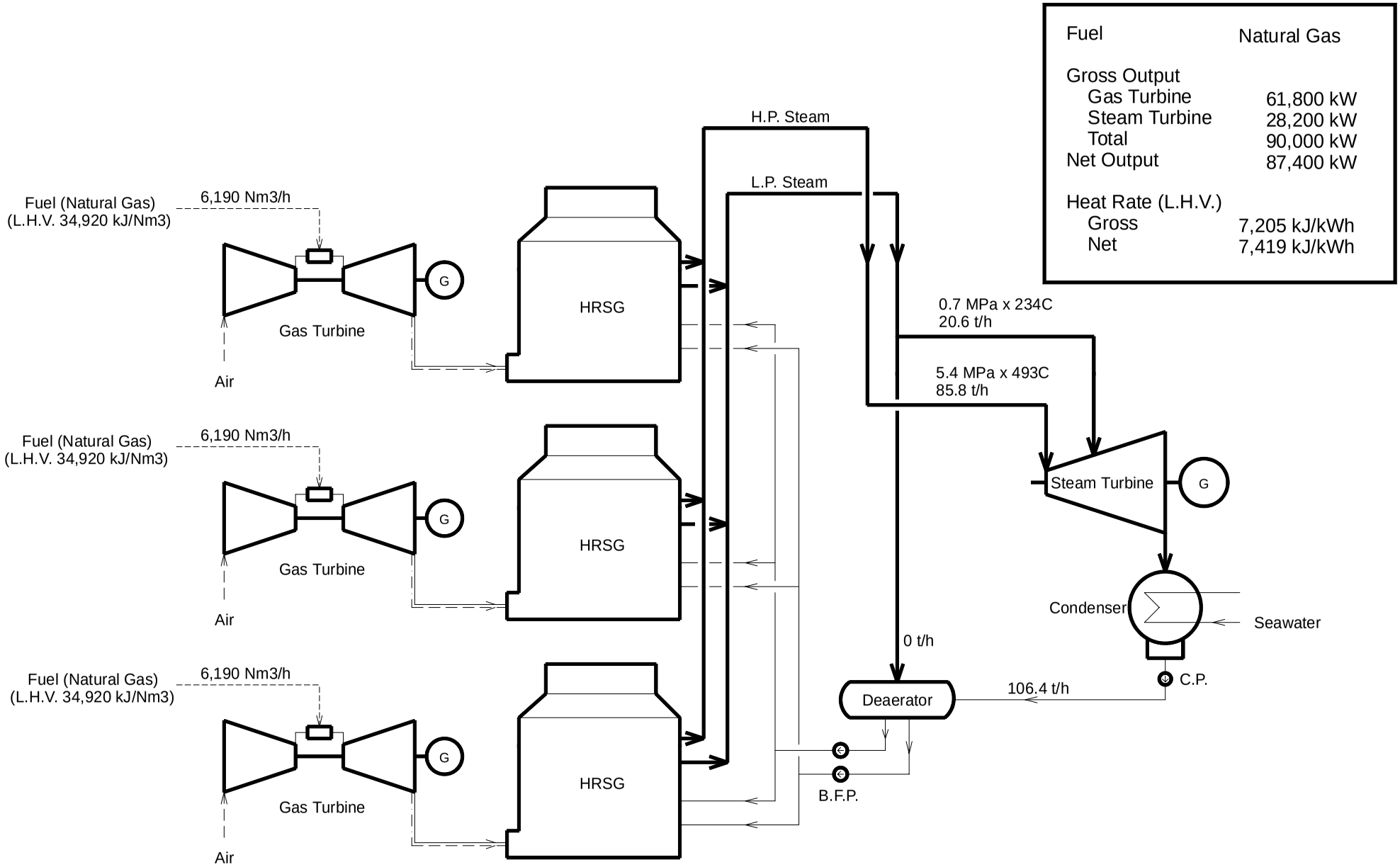

Fig.6.6-1 Heat Balance of Gas Turbine Combined Cycle Power Plant (Natural Gas)

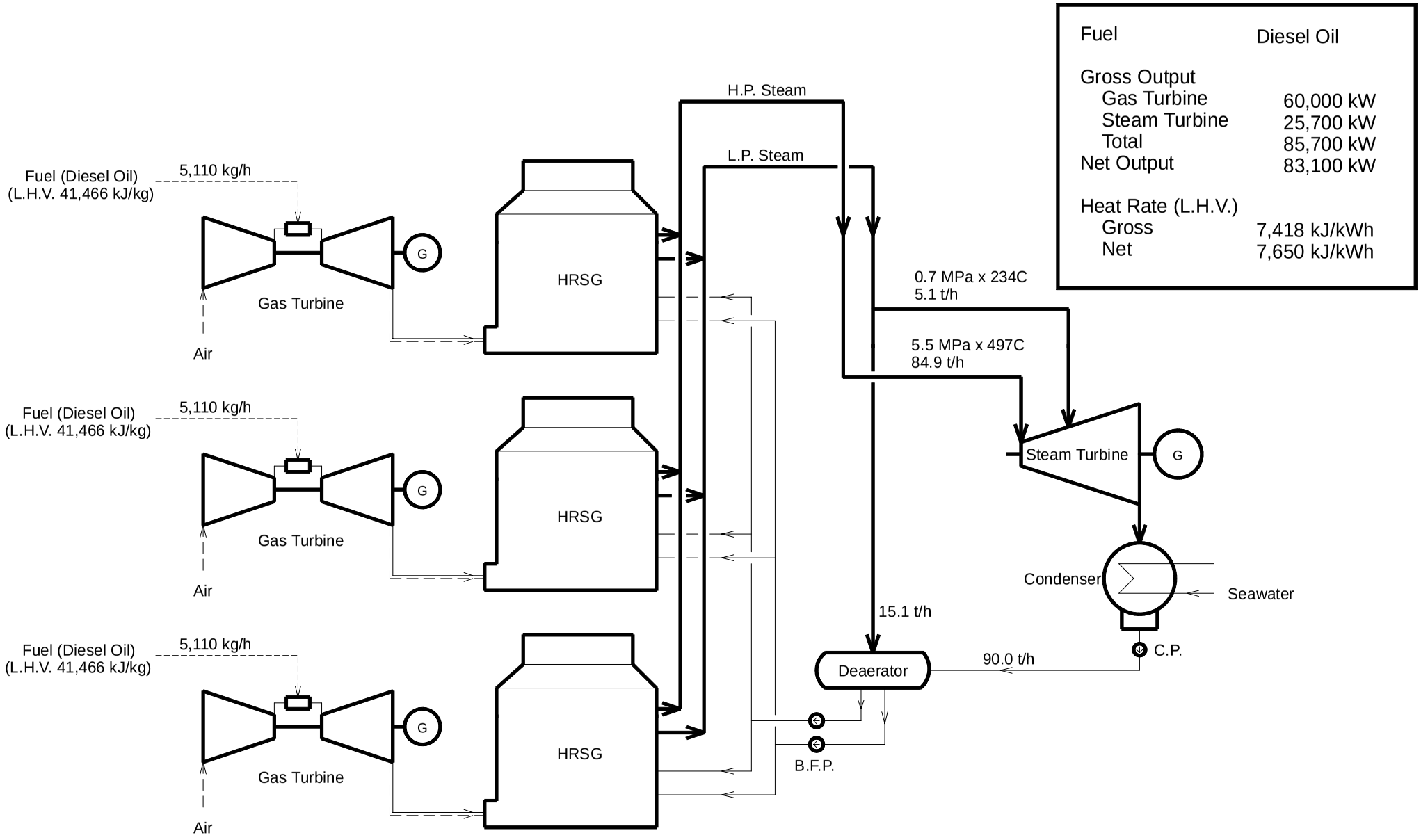

Fig.6.6-2 Heat Balance of Gas Turbine Combined Cycle Power Plant (Diesel Oil)

6.6.2. Steam/Water Cycle

(1) Steam Cycle

High-pressure superheated steam and low-pressure superheated steam are produced in the HRSG by heat of gas turbine's exhaust gas. The high-pressure steam enters an inlet of steam turbine. The low-pressure steam enters an intermediate stage of steam turbine and is mixed with the steam exhausted from the high-pressure turbine. Those steams expand in the steam turbine and rotate a generator that is connected with the steam turbine directly or through a reduction gear.

Turbine steam bypass system is provided with bypass facilities to allow both steam turbine and HRSG unit start up or re-start times to be minimized, and the unit to remain in operation supplying the unit auxiliary power demand, following disconnection from the grid.

The steam, which is exhausted from the steam turbine, enters a condenser and is condensed by cooling water.

Heating steam for feedwater is supplied to a deaerator from the low-pressure steam line.

Refer to Fig. 6.6-3.

(2) Water Cycle

Condensate water is fed from a condenser to a deaerator directly (in case of diesel oil firing) or via LP economizer (in case of natural gas firing) by 2 × 100% condensate pumps (one of two pumps is on standby) before entering the HRSG. The water is heated by the deaerator using low-pressure steam (in case of diesel oil firing) or by hot feedwater recirculation at LP economizer (in case of natural gas firing), and supplied to HRSGs by boiler feed water pumps as feedwater.

Two electric motor driven high-pressure boiler feedwater pumps and two electric motor driven low-pressure boiler feedwater pumps will be provided for each

HRSG. One of two pumps will be on standby. The high-pressure boiler feedwater pumps will supply feedwater to the high-pressure line and the low-pressure boiler feedwater pumps will supply feedwater to the low-pressure line. Each pump will be rated at 100% of HRSG maximum continuous rating with margins.

During diesel oil firing the feedwater temperature supplied to the HRSGs requires to be higher than the SO_3 dew point temperature of flue gas, which is dependent on the sulfur content of the diesel oil used, to prevent sulfuric acid corrosion.

As natural gas has no sulfur content, the feedwater temperature can be reduced to extract additional heat from the exhaust gasses. However, the feedwater temperature must be higher than the moisture dew point temperature to prevent condensation of the exhaust gasses. Excessive corrosion of carbon steel by carbonic acid would occur if feedwater temperature is below the moisture dew point.

Therefore the feedwater temperature entering the HRSGs has to be controlled to prevent sulfuric acid corrosion and carbonic acid corrosion on the outside surface of the economizer tubes.

In this Project, the feedwater temperature is controlled to 135°C by steam heating in deaerator when firing oil, and to 60°C by hot feedwater recirculation at LP economizer when firing natural gas.

Refer to Fig. 6.6-3.

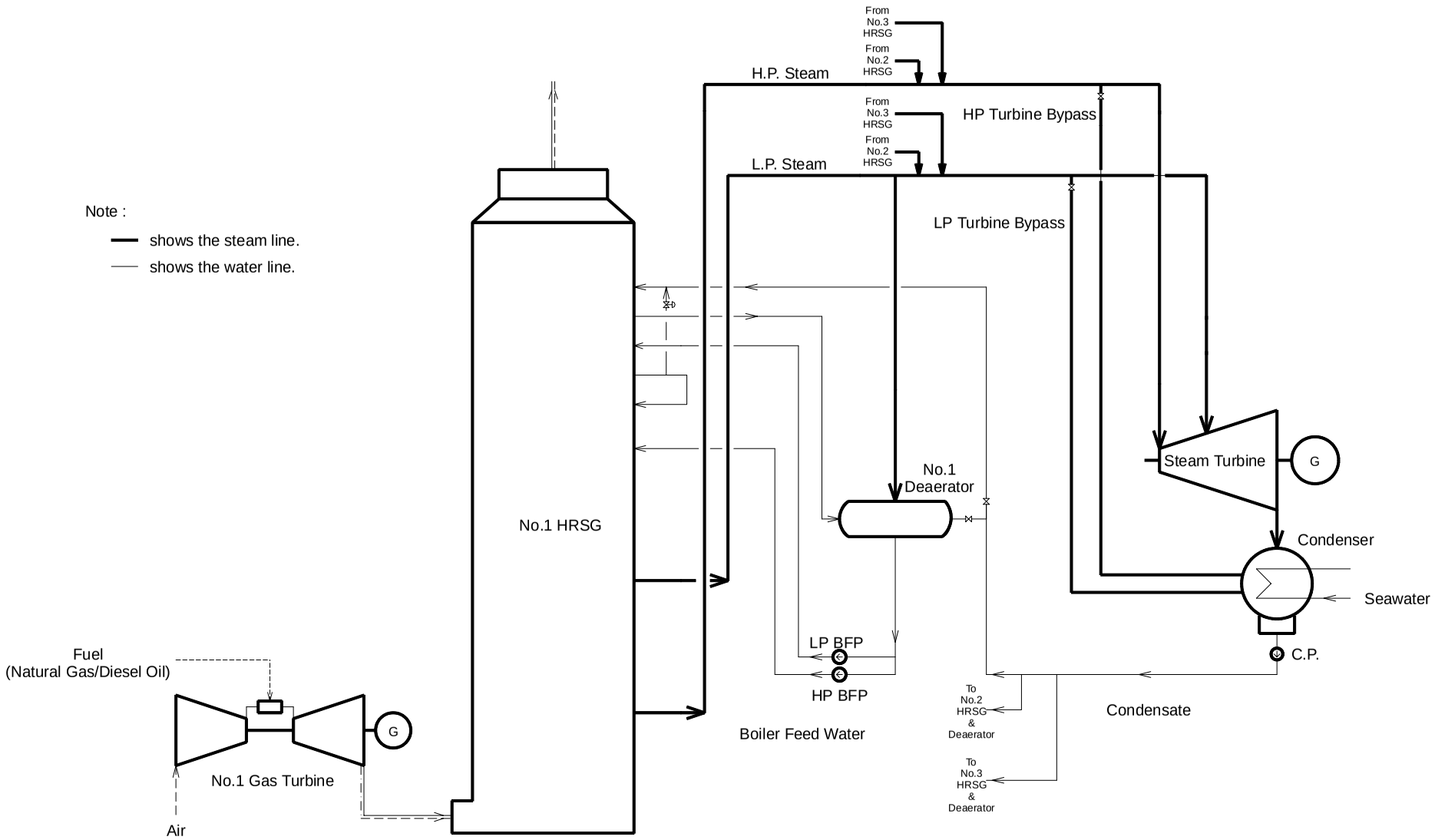

Fig.6.6-3 Steam and Water System of Gas Turbine Combined Cycle Power Plant

6.6.3. Fuel Supply and Storage System

(1) Kind of Fuel

Natural gas and diesel oil will be used as fuel for the Project.

(2) Natural Gas Supply Plan

Natural gas will be used as main fuel. The natural gas will be supplied to the site boundary by pipeline.

One (1) operating and one (1) standby filter separator unit for each gas turbine is recommended to be installed for protecting the gas turbine fuel equipment from particulates and moisture carry-over from the gas treatment plant. One (1) gas flow meter will be installed in the incoming supply pipeline and one (1) gas flow meter will be installed in each of the gas turbine supply pipelines.

(3) Diesel Oil Supply Plan

Diesel oil will be used as standby fuel when natural gas is not available. In Cambodia, all of liquid fuels are currently imported and in 1995 Cambodia imported diesel oil of 40,000 tons of oil equivalent.

Cambodia imports mainly diesel oil from Singapore and Thailand and it is dealt in oil companies such as Sokimex. Those petroleum products are unloaded at Sokimex Oil Terminal in Sihanoukville City, or transported by barge to Phnom Penh through the Mekong River, unloaded there and transported to each consumer by tank car.

Diesel oil for the Project will be supplied from Sokimex Oil Terminal because the site is located approx. 2 km south of this oil terminal. Diesel oil can be transported from the oil terminal by pipeline, sea (barge) or train. However, for the Project, pipeline transport is selected because of the short distance between the site and the oil terminal. Marine transport is costly because port facilities to unload oil have to construct for the Project.

(4) Diesel Oil Storage Plan

(a) Storage Site

It is very important to keep utilities such as fuels for the power plant in order to ensure the stability of power supply. It is necessary for Cambodia to take measures against the matter in transportation such as bad weather or tanker trouble because they have to import all the fuels.
Oil stockpiling is one of the most effective countermeasures and there are two candidate places to stock diesel oil for the Project. One is the oil terminal site and the other is the power station premises.

Sokimex Oil Terminal has oil storage capacity of 96,760 ton in all. 74,500 ton of them is diesel oil and accounts for close to 77%. Therefore, the diesel oil storage in the oil terminal can be expected to use as measures against the matter in transportation.

However, the oil storage capacity in the oil terminal will be effective only in a short-term trouble. If it takes a long time to solve the trouble, it will be unknown whether the oil supply to the power station is given the highest priority. Furthermore, we have to consider the position of importance of the power station to supply electricity to Phnom Penh and Sihanoukville. Therefore, its own oil stockpiling is preferable from the risk management's point of view, and storage tanks to stockpile diesel oil will be installed in the power station premises.

(b) Storage Capacity

Assumed consumption of diesel oil in Stage 1 of the Project (90 MW) will be approximately 110 thousands tonnes per year. While the total consumption of diesel oil in Cambodia as of 1995 was only 40 thousands tonnes per year. Therefore, after completion of this Power Plant, oil tanker transporting diesel oil from overseas to Sokimex Oil Terminal would be operated in compliance with the demand scheme of oil in the power plant.

In that case, on condition that service days of ship for one shuttle trip is 10 days (see below), the capacity of tanker is assumed as follows:

$$(110{,}000 + 40{,}000) \times 10/365 = 4{,}110 \text{ tonnes}$$

Adding some allowance to the above, the capacity of oil tanker would be 5,000 tonnes class.

The diesel oil tank needs to have a storage capacity equivalent to the oil quantity to be consumed for a normal period of transportation plus a recovery period for accident in transportation.

It is assumed that it takes 10 days for a normal transportation by a 5,000 DWT oil tanker.

• Loading at a port of shipment	2 days	(including a period of demurrage)
• Transportation from a port of shipment to Sokimex Oil Terminal	3 days	
• Unloading at oil terminal	2 days	(including a period of demurrage)
• Transportation from Sokimex Oil Terminal to a port of shipment	3 days	
• Total Period	10 days	

It is assumed that it will be 14 days not to unload oil at Sokimex Oil Terminal by adding a maximum period of accident in transportation of 4 days to the normal period of transportation of 10 days. According to Sokimex, it has been a maximum of 2 days not to unload oil at Sokimex Oil Terminal due to bad weather.

The diesel oil consumption will be approx. 370 ton/day/stage so that the storage tank capacity equivalent to oil consumption for 14 days will be 5,180 ton. One (1) storage tank per each stage will be installed.

6.6.4. Cooling Water System

(1) Outline

The cooling water system will be provided to supply cooling water to power plant equipment that requires a cooling medium for their operation. The cooling water system consists of primary cooling water system with seawater (hereinafter called main cooling water system) and secondary cooling water system with fresh water (hereinafter called closed circuit cooling water system).

(2) Main Cooling Water System

(a) General

The main cooling water system provides the total seawater requirements for the condensers and the closed circuit cooling water system.

The main cooling water system will be of once through type using seawater drawn from an off shore intake and an adequate interval between intake and discharge points will be considered to prevent the hot water from recirculation into the cooling water intake.

It is desirable that the temperature rise of main cooling water will be not more than 7°C under the rated conditions to minimize the effect on aquatic organisms, fishes, etc. Furthermore, the effluence should result in a temperature increase of no more than 3°C at the edge of the zone that is 100 m away from the point of discharge.

The quantity of cooling water per stage is estimated as follows:

a.	For condenser	:	8,000 m^3/h
b.	For closed circuit cooling water system	:	1,000 m^3/h
c.	Total per stage of 90 MW	:	9,000 m^3/h

The main cooling water system will consist of screening plant, chlorine injection system, cooling water pumps, seawater booster pumps for closed circuit cooling water system, etc.

Cooling water for the plant will be taken from the sea at the depth of around 5m and supplied to the cooling water pump bay through the screening plant in the cooling water pump pit. The cooling water will be pumped by the cooling water pumps and supplied to the condenser of the steam turbines and the water coolers for closed circuit cooling water system.

The cooling water from the condenser and the water coolers for closed circuit cooling water system will be discharged to the sea at the depth of around 5 m through the seal weir and the discharge nozzles.

Fig.6.6-4 shows the flow diagram of main cooling water system.

(b) Cooling Water Intake

Cooling water will be taken at the depth of around 5 m and flow under gravity with either lined steel pipe, reinforced concrete pipe or concrete culvert to the cooling water pump pit. The water intake system will be provided for each stage of the plant basis except the cooling water pump pit, which is provided for a commonly use basis. When steel pipe is selected, it will be coated with tar-epoxy for internal surface and with coal-tar enamel paint for external surface and protected by the sacrificial anodes type cathodic protection system.

(c) Screening Plant

All intake water will require filtering through screens prior to entry into the cooling water pump bay in order to protect the equipment. The screening plant will be capable of removing floating and suspended debris.

A screening plant will be provided for each stage of the plant. The screening plant will consist of a coarse screen with trash rake, which guard against large debris and fine screens. The screen wash pumps will be provided to clean the fine screens sufficiently and installed in the pump pit.

Stop logs will be installed to isolate one zone from other zones for maintenance of equipment installed in the zone. The materials will be either carbon steel or concrete.

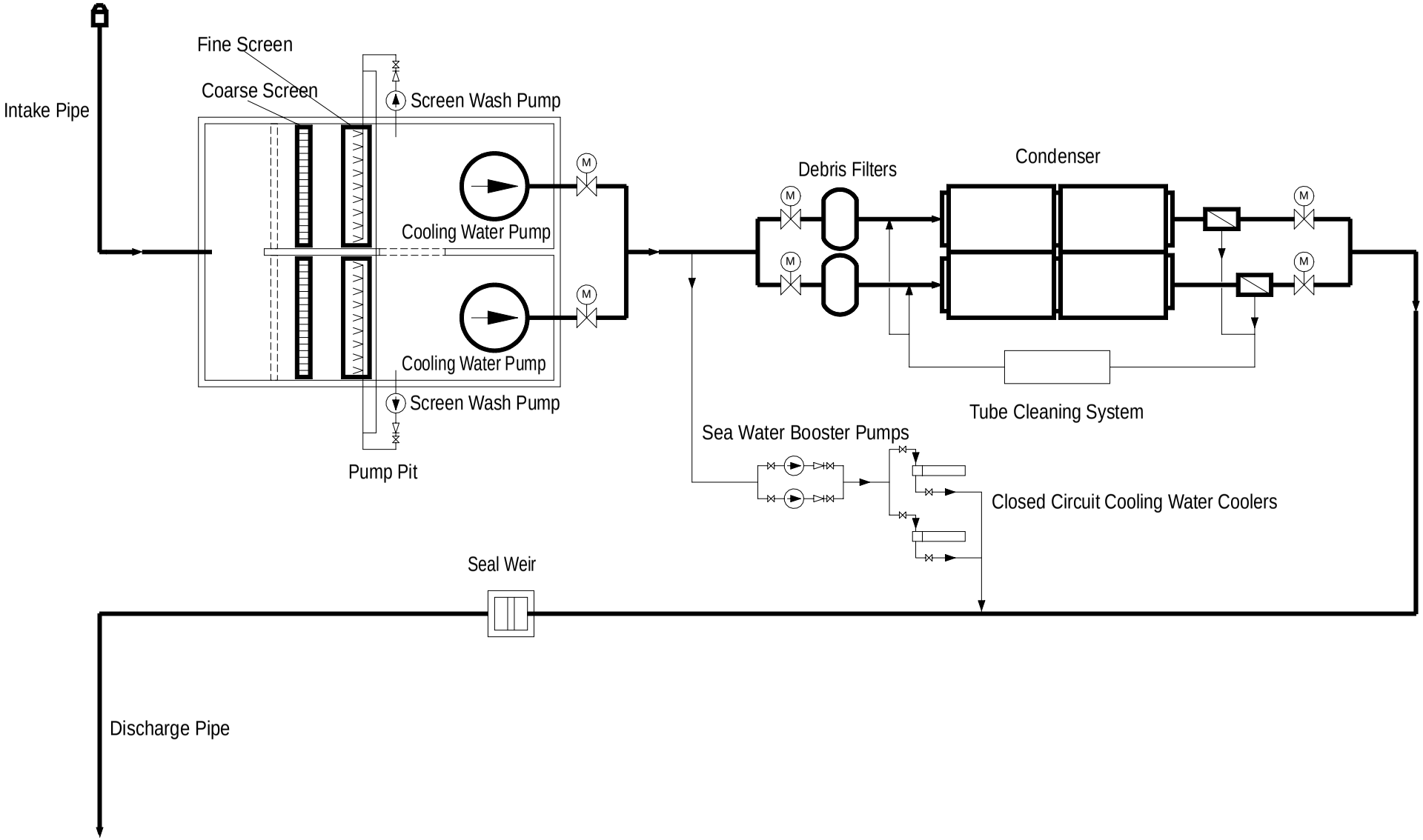

Fig.6.6-4 Flow Diagram of Main Cooling Water System

(d) Chlorine Injection System

Where harmful level of marine growth in the cooling water system is foreseen in the area, the cooling water will be chemically dosed with biocide such as hypochlorite solution to keep the cooling water system free from marine growth and maintain condenser and water cooler surfaces free from slime.

(e) Debris Filter

In case the marine growth such as mussels and/or barnacles is expected in the cooling water supply line, debris filter may have to be considered, in conjunction with chlorine injection system.

(f) Cooling Water Pumps

Two cooling water pumps will be provided for each stage of the plant. Each pump will be designed for 50% of total cooling water design capacity and continuous parallel operation.

The pump head will be selected to overcome the system losses through the condenser loop.

(g) Distribution System

The main distribution system from the cooling water pumps to the seal weir pit will comprise either buried, lined steel pipe or concrete culvert.

For the section from the cooling water pump outlet to the condenser inlet, steel pipe with inner tar-epoxy lining and outer covering of coal-tar enamel paint will be applied.

For the section from the condenser outlet to the seal weir pit inlet, steel pipe with inner tar-epoxy lining and outer covering of coal-tar enamel paint or concrete culvert will be applied. When lined steel pipe is selected, cathodic protection system will be applied.

(h) Cooling Water Discharge

The Cooling water from the seal weir pit to the discharge point will flow under gravity and be discharged to the sea at the depth of around 5m and with either lined steel pipe, reinforced concrete pipe or concrete culvert. The water discharge system will be provided for each Stage. When steel pipe is selected, it will be coated with tar-epoxy for internal surface and with coal-tar enamel paint for external surface and protected by the sacrificial anodes type cathodic protection system.

(3) Closed Circuit Cooling Water System

(a) General

The closed circuit cooling water system is provided to supply cooling water to the miscellaneous power plant equipment that requires a cooling medium for their operation.

Demineralized water will be used as an intermediate cooling medium between the equipment coolers and seawater. The cooling water is cooled by seawater using the water coolers.

Each Stage will be provided with a closed circuit cooling water system. Each system consists of water coolers, head tank, circulating pumps and distribution system.

(b) Water Coolers

Two water coolers will be provided on each system to dissipate heat in the closed circuit cooling water system. The capacity of each water cooler will be adequate for 100% of the total cooling requirement with a suitable margin on surface area. The water coolers will be of tubular or plate type.

The cooling medium in the water cooler is seawater taken from the main cooling water system.

(c) Head Tank

Each system will be provided with a cooling water head tank that is installed at an elevated level, to maintain a constant static head on circulating pump suction and for permitting expansion of the water circulating through the system. Make-up water to the system will be taken from the demineralized water tanks through a level controller in the head tank.

(d) Circulating Pumps

Two motor-driven circulating pumps will be provided on each system, one normally running and the other to start automatically on a trip or an operating failure of the running pump. The capacity of each pump will be 100% of total cooling water requirement and pump duty point will have a suitable margin on capacity and total head.

(e) Distribution System

The closed circuit cooling water, pumped up by a circulating pump, will be discharged to a supply header and then distributed to different coolers in the HRSG and steam turbine area. The coolers will discharge to a return header leading to suction of the circulating pumps.

6.6.5. Fresh Water Supply System

(1) Fresh Water Source

Fresh water demand for the plant with capacity of 90 MW × 2 is about 9 m^3/h, after extension to 270 MW it is about 13 m^3/h. Prey Treng Pond is the most suitable for fresh water source of the power station because of near location. However, it is expected that water supply from Prey Treng Pond is not sufficient in dry season. Therefore, the water reservoirs are necessary.

(2) Fresh Water Supply System

The water supply system will provide the total requirement of main plant cycle make-up, potable and auxiliary service water for the power plant.

The capacity of the water supply equipment and water storage will ensure that the power station is self sufficient in water supplies.

The system consists of raw water supply equipment, pre-treatment system, potable water treatment supplies and demineralization system.

All pipes, pumps, valves and tanks containing or handling corrosive chemicals will be manufactured from materials to ensure long lifetime such as stainless steel, PVC or appropriate lined steel.

The system is illustrated in Fig.6.6-5.

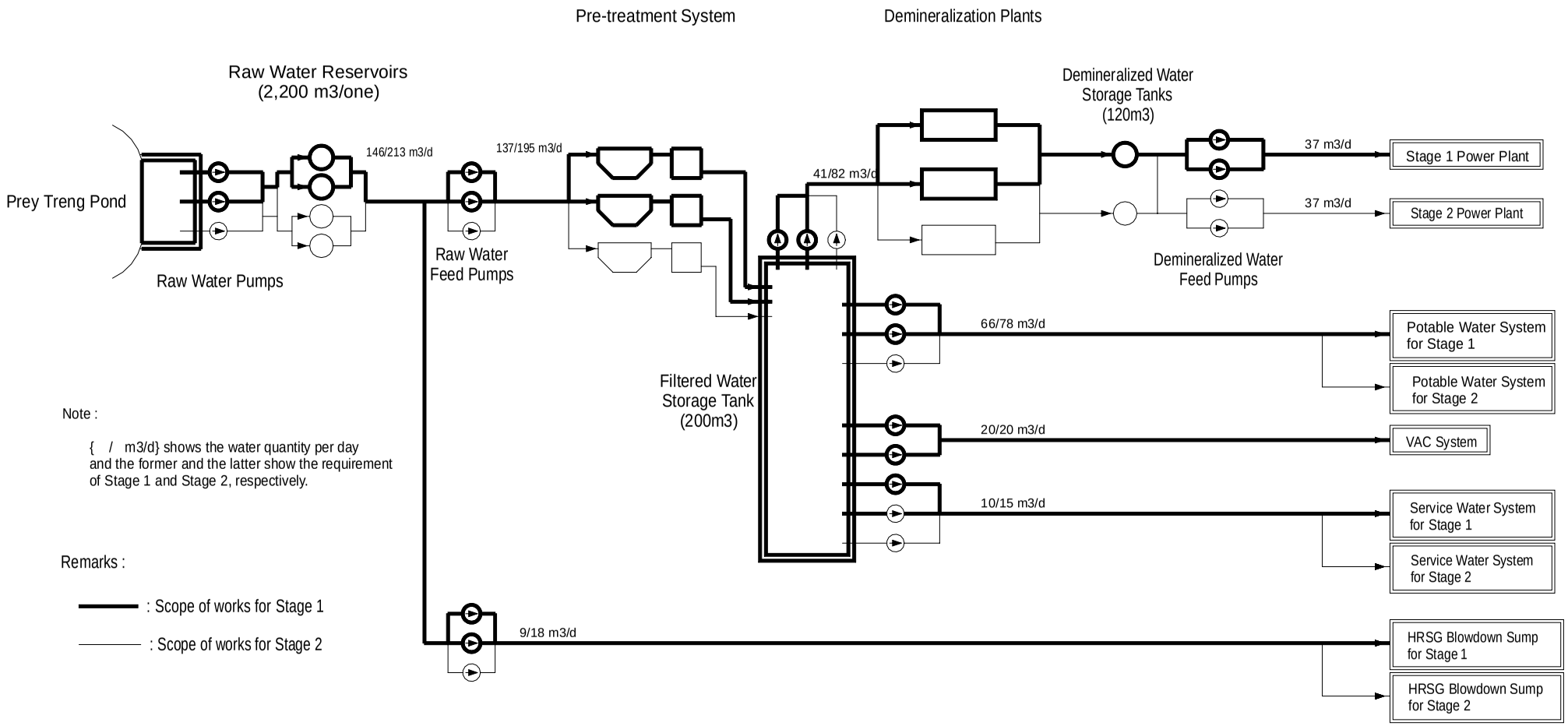

Fig.6.6-5 Flow Diagram of Fresh Water Supply System

(3) Water Demand and Plant Sizing

(a) General

The principal demand of fresh water is as follows.

a. Demineralized water for main plant cycle make-up.
b. Demineralized water for make-up and re-filling to closed circuit cooling water system.
c. Potable water for power plant services.
d. Filtered water to auxiliary station services (floor washing, irrigation, etc.)

The rated output of the water supply system plant with associated water storage capacity will have the capability of meeting the total demand of the above services during maximum continuous power plant production and peak station service demand.

The water production and treatment plant will be 2 × 100% parallel streams to secure full design production with one stream on standby or under maintenance.

The water reservoir with the 1 month holding capacity of fresh water consumption will be provided for shortage of water during dry season.

(b) Demineralized Water

The demineralized water is used as make-up for main plant cycle, make-up for closed circuit cooling water system, waters for laboratory and so on. Total demineralized water demand is estimated at 37 m^3/d for Stage 1 and 74 m^3/d for Stage 1 & Stage 2.

The water losses from main plant cycle are as follows. The demineralized water is supplied to the main plant cycle as make-up water in order to make up the losses.

a. HRSG continuous blow down:

Quantity of 1% of HRSG maximum steam generation

Stage 1 : 26 m^3/d
Stage 1 & Stage 2 : 52 m^3/d

b. Cycle leakage, sampling loss, laboratory use and others:

Quantity of 0.2% of HRSG maximum steam generation
Stage 1 : 6 m^3/d
Stage 1 & Stage 2 : 12 m^3/d

c. Make-up for main plant cycle [a + b]:

Stage 1 : 32 m^3/d
Stage 1 & Stage 2 : 64 m^3/d

The water loss from closed cooling circuit water system is as follows. The demineralized water is supplied to the closed cooling circuit water system as make-up water in order to make up the losses.

a. Leakage from closed cooling circuit water system:

Quantity of 0.1% of recirculation flow
Stage 1 : 5 m^3/d
Stage 1 & Stage 2 : 10 m^3/d

(c) Filtered Water

The filtered water is used for demineralization plant, potable water system, VAC system and service water system. Total filtered water demand is estimated at 137 m^3/d for Stage 1 and 195 m^3/d for Stage 1 & Stage 2.

The filtered water demand is as follows.

a. Demineralization plant:

The filtered water supplied to demineralization plant includes the water demand for regeneration (10% of demineralized water).
Stage 1 : 41 m^3/d
Stage 1 & Stage 2 : 82 m^3/d

b. Potable water system:

The consumption of potable water and living water is estimated at 200 *l*/day/capita. The number of staffs is estimated around 120 persons for Stage 1 and 160 persons for Stage 1 & Stage 2. Therefore, the consumption of potable water and living water is as follows.

Stage 1	:	24 m^3/d
Stage 1 & Stage 2	:	32 m^3/d

It is necessary to add 50% of the above consumption as allowance for visitors and other unforeseen requirement. Moreover, the water demand of 30 m^3/d is added as canteen use. The filtered water fed to potable water system is as follows.

Stage 1	:	66 m^3/d
Stage 1 & Stage 2	:	78 m^3/d

c. VAC system:

The filtered water supplied to VAC system is estimated as follows.

Stage 1	:	20 m^3/d
Stage 1 & Stage 2	:	20 m^3/d

d. Service water system:

The filtered water supplied to service water system such as irrigation, floor washing, workshop, etc. is as follows.

Stage 1	:	10 m^3/d
Stage 1 & Stage 2	:	15 m^3/d

(d) Raw Water

The raw water is used for filtered water plant and HRSG blow down cooling. Total raw water demand is estimated at 146 m^3/d for Stage 1 and 213 m^3/d for Stage 1 & Stage 2.

The raw water demand is as follows.

a. Filtered water plant:

The raw water quantity supplied to filtered water plant is as follows.

Stage 1	:	137 m^3/d
Stage 1 & Stage 2	:	195 m^3/d

b. HRSG blow down cooling:

HRSG blow down is cooled by the raw water because it is too hot to discharge. The raw water requirement for HRSG blow down cooling is as follows.

Stage 1	:	9 m^3/d
Stage 1 & Stage 2	:	18 m^3/d

(4) System Outline

(a) Raw Water Supply System

Raw water will be taken from Prey Treng Pond adjacent to the power plant premises. Water intake structure will be constructed outside of the site boundary and some area will be excavated and dredged for installation of the water intake structure.

The raw water is pumped up from the pond to two (2) water reservoirs per stage. Each reservoir is reinforced concrete open tank with the capacity of 2,200 m^3 that is equivalent to 0.5-month demand, against water shortage during dry season.

(b) Pre-Treatment System

Pre-treatment system will supply the filtered water to demineralization plant, potable water system, VAC system and service water system

The pre-treatment system is installed to eliminate suspended particles and colloidal matters in raw water. Pre-treatment system consists of clarifiers and filters.

The clarifier will be applied either of sludge recirculation type or sludge

blanket type. Coagulant is dosed to the clarifier and mixed with raw water for coagulation of suspended particles and colloidal matter in the clarifier. Coagulated solids form sediment at the bottom of the clarifier and are discharged to the collection sump. The clarified water then flows into the filters for removing the remaining solids.

The filter eliminates residual suspended particles using filtration material such as sand or anthracite.

The water flowing through the filter is finally collected in the reinforced concrete filtered water storage tanks.

(c) Potable Water Treatment Supplies

The potable water will be pumped from the filtered water storage tanks to a potable water storage tank through the activated carbon filter and sterilized by chlorination confirming to World Health Organization (WHO) guideline.

The storage tank will have a capacity of $80m^3$, which is equivalent to one-day requirement. From the storage tank the potable water will be distributed under gravity to all the various buildings/houses and utilization points in the power plant site requiring water supply.

(d) Demineralization Plant

Demineralization plant eliminates dissolved salts from filtered water using ion exchange resin and consists of cation exchange unit, degasifier, and anion exchange unit.

The demineralized water characteristics at the system outlet will be proposed as follows:

Silica (SiO_2)	Less than 20 micro gram/liter
Conductivity	less than 0.15 micro siemens/cm

The demineralized system will be provided with three (3) 100% capacity trains and one set of common regeneration equipment for 2 stages (total capacity of 180 MW). The capacity of one train is equivalent to requirement of

one stage (90 MW) plus other miscellaneous use. Two trains and one set of common regeneration equipment will be installed at the first stage (90 MW). Another train will be installed at the second stage (total capacity of 180 MW).

The treated water will be stored in two demineralized water storage tanks and fed to each consumer. Each tank capacity is 120 m^3 that is equivalent to 3 days demand. However, intermittent demands such as demineralized water for initial HRSG filling and HRSG washing, etc. will be also considered in the determination of water storage capacity.

Regenerants for the exchanger resins will be HCl and NaOH solutions. The storage capacity of regenerants will be proposed as two weeks.

6.6.6. Wastewater Treatment System

(1) General

The wastewater treatment system will be designed to collect and process the waste water discharged from the power station so that the effluent water quality meets the applicable environmental regulatory standards before it is discharged or reused.

Please refer to item 5.1.2 regarding environmental regulatory standard.

The system will handle the liquid wastes from various plant sources including regularly discharged chemical waste, intermittently discharged chemical waste, oil waste, sewage waste and storm water run off. Each type of wastewater will be collected in a separate collection system and will then be treated with a process most appropriate to the nature of the waste.

The system is illustrated in Fig.6.6-6.

(2) Sources

The sources of wastewater and drainage from power station are divided in three major categories as follows.

- Constantly discharged wastewater
- Intermittently discharged wastewater
- Rain and storm water

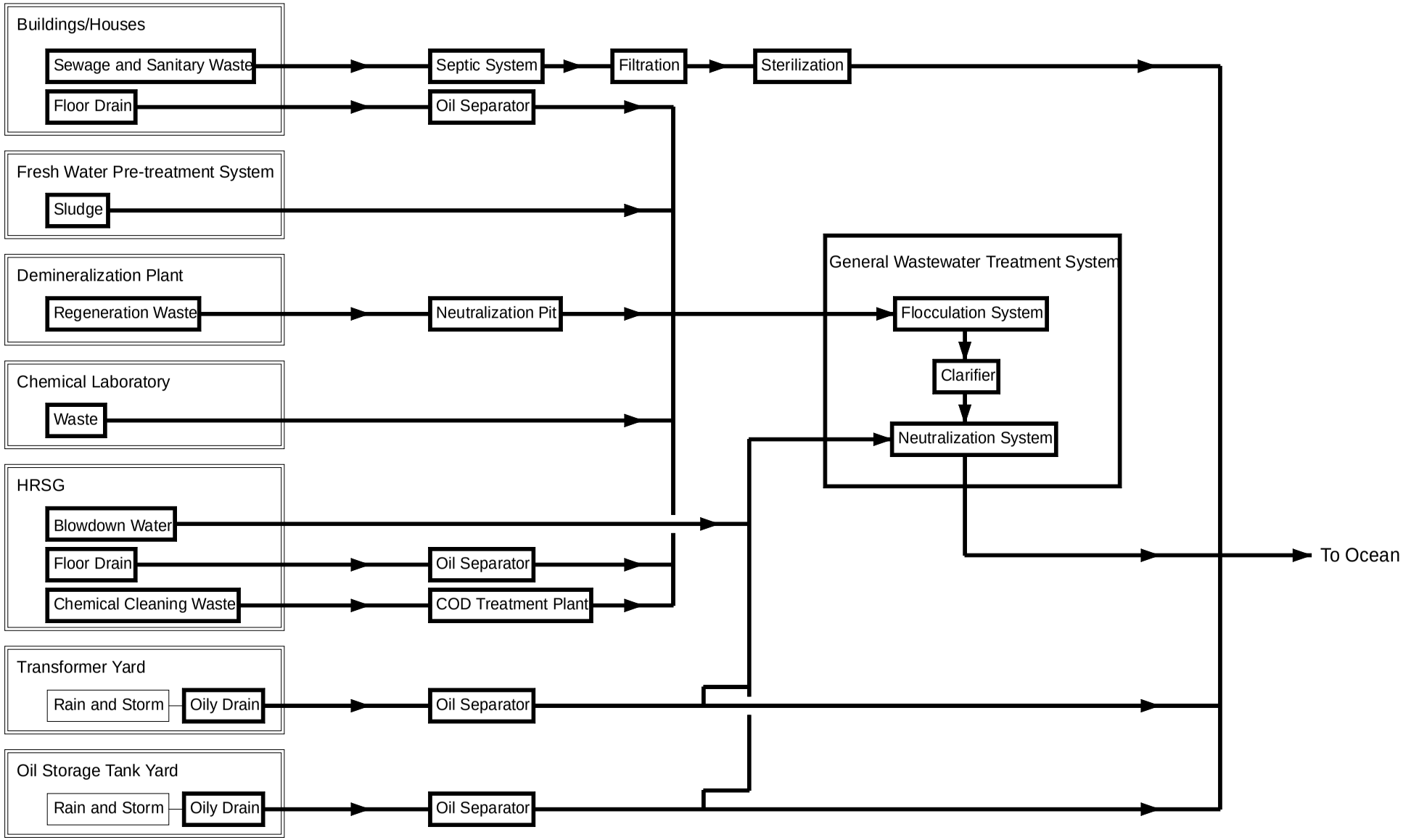

Fig.6.6-6 Flow Diagram of Wastewater Treatment System

(3) Constantly Discharged Wastewater

The constantly discharged wastewater will be discharged from the following equipment or system.

- Pre-treatment system of fresh water
- Demineralization plant
- HRSG blow down
- Floor drain of building/houses and HRSG area
- Chemical laboratory
- Sewage and sanitary system

(a) Wastewater from pre-treatment system of fresh water

Suspended solids will be contained in the wastewater from the pre-treatment system of fresh water.

The wastewater will be transferred to and treated by the general wastewater treatment system. Refer to item (6) regarding general wastewater treatment system.

(b) Wastewater from demineralization plant

Regeneration waste will be discharged from the demineralization plant. Suspended solids will be contained in the regeneration waste and pH value of the waste will be beyond the limits of environmental regulatory standard.

The wastewater will be first transferred to the local neutralization pit located at the demineralization plant area to regulate pH value to the optimum level for the general wastewater treatment system. After neutralization, the wastewater will be transferred to and treated by the general wastewater treatment system.

(c) Wastewater from HRSG

The blow-down water will be discharged from HRSG to maintain the steam purity. The pH value of the blow-down water will be beyond the limits of environmental regulatory standard.

The blow-down water will be transferred to the neutralization plant in the general wastewater treatment system to regulate pH value to the optimum level of environmental regulatory standard. After neutralization, the effluent will be discharged to the sea.

(d) Wastewater from buildings/houses and HRSG area

The floor drain will be discharged from buildings/houses and HRSG area, and will comprise wash out water, cooling water, etc. for equipment. Suspended solids and oil will be contained in the drains.

The drains will be first transferred to the oil separator located at the buildings/houses or HRSG area. After oil separation, the drains will be transferred to and treated by the general wastewater treatment system.

(e) Wastewater from chemical laboratory

Suspended solids will be contained in the wastewater from the chemical laboratory and pH value of the wastewater will be beyond the limits of environmental regulatory standard.

The wastewater will be directly transferred to and treated by the general wastewater treatment system because it is very little.

(f) Sewage and sanitary waste

Sewage and sanitary waste will be directly transferred to the sewage treatment plant to reduce suspended solids and biochemical oxygen demand (BOD). The treated water will be discharged to the sea.

The sewage treatment plant usually comprises screen, septic system utilizing active sludge process under aeration, post filtration and sterilization.

Temporary sewage treatment plant will be separately prepared to treat sewage and sanitary waste from the construction camp during plant construction.

(4) Intermittently Discharged Wastewater

The intermittently discharged wastewater will be discharged during HRSG chemical cleaning.

(a) Wastewater during HRSG Chemical Cleaning

Chemical cleaning will be done to remove scale from HRSG once per 4 to 5 years. After chemical cleaning, a large quantity of wastewater will be discharged from HRSG. The suspended solids and heavy metallic ions such as Fe will be contained in the wastewater. The chemical oxygen demand (COD) and pH value will be beyond the limits of environmental regulatory standard

The wastewater will be first transferred to the COD treatment system to neutralize, reduce COD and remove heavy metallic ions. After that, the wastewater will be transferred to and treated by the general wastewater treatment system. Refer to item (7) regarding COD treatment system.

(5) Rain and Storm Water

Rains and storm waters from oil storage tank yard and transformer yard contain oil, therefore these are collected and treated by oil separator and then discharged to the sea.

Other rains and storm waters are discharged to the sea directly because these contain no oil.

(6) General Wastewater Treatment System

General wastewater treatment system will be prepared for removing suspended solids and neutralize within the standard requirement. The treated water will be discharged to the sea.

The general wastewater treatment system usually comprises flocculation system, clarifier, filter and neutralization plant.

In the flocculation system, the coagulant and flocculant will be dosed for flocculation of suspended solids in the wastewater.

The clarifier will be of circular type with sufficient residence time for complete settling. The accumulated sludge will be discharged to the sludge dewatering system by a sludge pump.

The filter will be installed to further remove suspended solids or oil in the water.

The treated water will be discharged to the sea after pH value is finally adjusted in the neutralization plant within a permissible range.

(7) COD Treatment System

COD treatment system will be prepared for neutralizing and reducing COD within the standard requirement.

The wastewater will be led to the neutralization system prior to the COD reduction system. In the COD reduction system, oxidizing agent such as sodium hypochlorite (NaClO) will be dosed to the wastewater to separate the metallic ion as sedimentable oxides.

(8) Sludge Dewatering System

Sludge dewatering system usually comprises sludge thickener and sludge dewatering filter.

The sludge will be first concentrated by centrifugation in the sludge thickener and then dewatered by air or water pressure of 5 to 15 kg/cm^2 in the sludge dewatering system.

The hard sludge or cake from the sludge dewatering system will be incinerated in the power plant premises.

6.6.7. Compressed Air Supply System

(1) General

Compressed air supply system is composed of instrument and service compressed air systems. The normal working pressure of both systems will be 7 bar (g).

(2) Instrument Air System

The instrument air system will supply clean, dry and oil free compressed air for operation of diaphragm valves, valve positioners, pneumatic controllers, transmitters and other control devices requiring compressed air for operation.

The system consists of three compressors with inter-coolers and after-coolers, two air receivers, two air dryers and distribution piping system per 2 stages (Stage 1 & Stage 2). Each compressor will have a capacity of 100% of total requirement of the power plant of 90 MW basis. One of three compressors will be on common standby for either stage. Two compressors, one air receiver and one air dryer will be installed at Stage 1 (90 MW). Another compressor, air receiver and air dryer will be installed at Stage 2 (total capacity of 180 MW).

The compressor will be of centrifuge or screw and oil free type.

Two air dryers per set will be used in parallel for instrument air compressors. The air dryers are of regenerative type or other appropriate type. Each air dryers will be capable of maintaining a dew point of -15°C at maximum instrument air consumption and maximum cooling water temperature.

The air receiver will have a sufficient air storage capacity for the following requirements.

(a) 10 minutes holding capacity on normal plant operation
(b) Capacity to run down the power generating units as well as station service auxiliaries from the full load operation condition to non-operation condition without any additional air make–up supply

(3) Service Air System

The service air system will supply compressed air required for maintenance tools or operational purposes in the area of gas turbine rooms, steam turbine rooms, HRSGs, fuel oil pumping units, workshop, warehouse, laboratory, etc.

The system consists of three compressors with inter-coolers and after-coolers, two air receivers and distribution piping system per 2 stages (Stage 1 & Stage 2). Each compressor will have a capacity of 100% of total requirement of the power plant of 90 MW basis. One of three compressors will be on common standby for either Stage. Two compressors and one air receiver will be installed at Stage 1 (90 MW). Another compressor and air receiver will be installed at Stage 2 (total capacity of 180 MW).

The compressor will be of centrifuge or screw and oil free type.

The air receiver will have a capacity required to provide plant service air for 10 minutes.

The system is illustrated in Fig. 6.6-7.

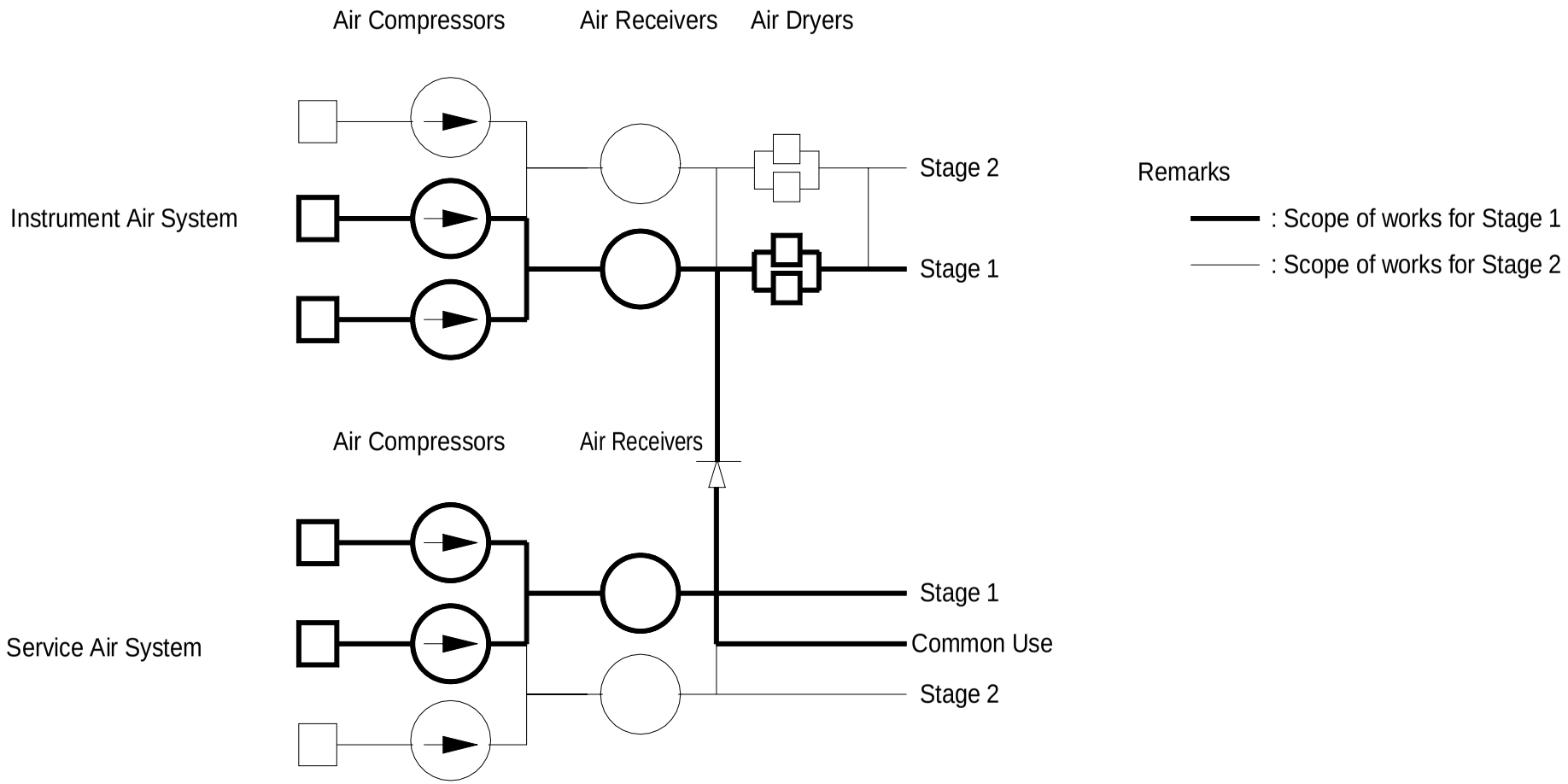

Fig.6.6-7 Flow Diagram of Compressed Air System

6.6.8. Electrical System

(1) General

Designs of electrical system and selection of equipment for the station are carried out considering reliability, operationability, maintenability, economics and etc. Applied equipment will be based on advanced technologies and proven with sufficient operating experiences.

(2) Station Auxiliary Electrical System

The generator output voltage is stepped up to the transmission voltage by the main transformer or generator transformer, and is connected to the in-plant substation. The transmission lines are connected to this in-plant substation and carry the power to the network load. Electrical power necessary for normal operation of gas turbine generator, steam turbine generator, heat recovery steam generator is fed directly from output circuit of the generator through block transformer.

Electrical power necessary for the normal start-up and shut-down of the power plant is fed in either one of the following schemes:

(a) Generator High Voltage Side Synchronization System

Normal electrical power for the power plant is supplied from in-plant substation via station transformer and synchronization of the generator with the external network system is carried out by generator circuit breaker located at high voltage side of the main transformer.

(b) Generator Low Voltage Side Synchronization System

Normal electrical power for the power plant is supplied from in-plant substation via main transformer reversely and via block transformer and synchronization of the generator with the external network system is carried out by generator circuit breaker located at low voltage side of the main transformer.

Either one is selected considering operationability and maintenability and applicable for Sihanoukville power plant.

Station auxiliaries are fed in the following categories of voltage;

(a) High Voltage Supply

Large capacity auxiliaries are fed from high voltage system which is connected to low voltage side of the block transformer. Generally, it is recommendable that either one of 3.3 kV and 6.6 kV is adopted depending on largest unit capacity of auxiliaries for station auxiliary high voltage system in accordance with one of standard voltages specified in IEC standards.

(b) Low Voltage Supply

Auxiliaries with smaller unit capacity than high voltage auxiliaries are fed from low voltage system which is stepped down by LV auxiliary power transformer from the high voltage system. Preferable low voltage system is three (3) phase four (4) wire system with nominal voltage of 400V in accordance with one of standard voltages specified in IEC standards. In this case, Phase-to- phase voltage of 400V and Phase-to-neutral voltage of 230V are available for low voltage auxiliaries.

(c) Lighting and Small Miscellaneous Load Supply

Lighting and small miscellaneous loads are fed from exclusive supply system with exclusive transformer. Such a exclusive system is three (3) phase four (4) wire system with nominal voltage of 400V and single phase voltage or phase-to-neutral voltage is applied to the loads.

(d) Control Power Supply

Power supply of micro-processor based control system is fed from uninterruptible power supply system (UPS) which inverts DC power to AC power or directly from DC power supply system. Preferable voltage may be 100 V, single phase for AC and 100V for DC.

(e) DC Power Supply

DC power supply system is provided to feed DC power to DC motors, DC control equipment and DC emergency lighting equipment. DC power supply

system consists of Batteries and battery charger which converts AC power to DC power to charge the batteries. Preferable rated voltage is 110V, in accordance with one of standard voltages specified in IEC standards.

System configuration of each scheme is shown in Fig.6.6-8

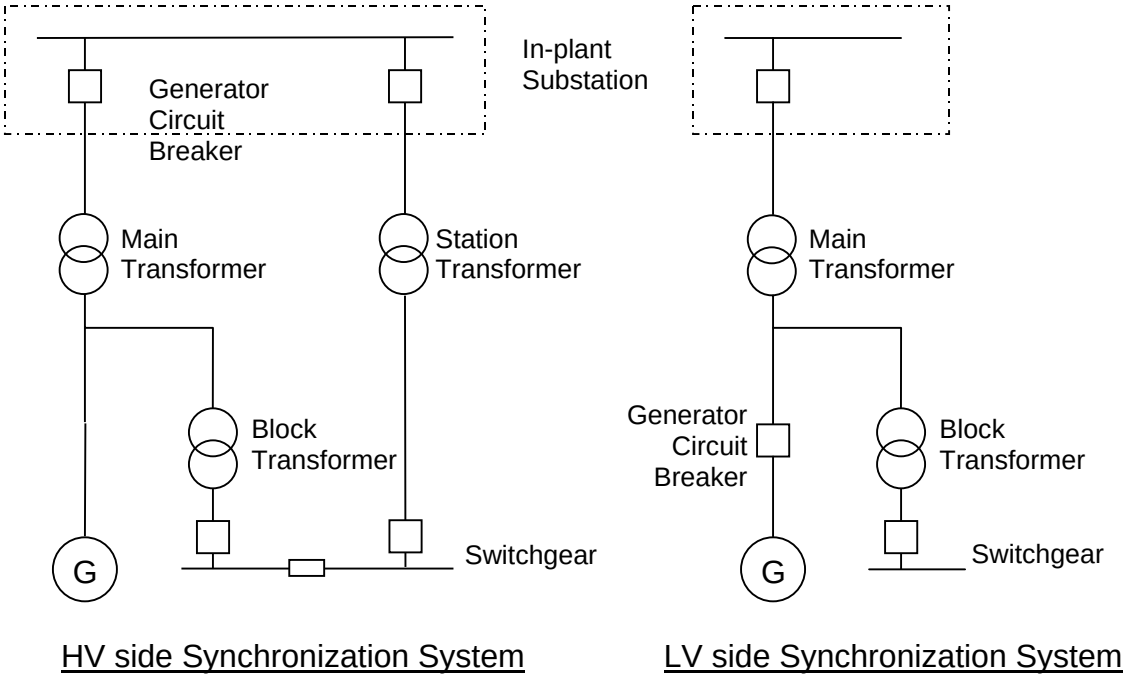

Fig.6.6-8 Unit Power Supply System

(3) Emergency Power Supply

When power plant is shut down under complete loss of auxiliary electrical power, what is called, black-out condition, e.g. due to complete fault shut down of in-plant substation, diesel generator set is provided to supply electrical power necessary for bringing down to stand-still condition and to maintain the power plant in safety. This emergency diesel generator supplies electrical power to minimum limited auxiliaries as necessary.

DC power supply system and un-interruptible power supply system (UPS) are available for the following services in above mentioned emergency case:

DC power supply system	:	DC motor, emergency DC lighting, DC control and instrumentation circuits, DC power supply for control equipment
UPS	:	AC power supply for control equipment, AC control and instrumentation Circuits

(4) Supervising and Control of Station Auxiliaries Electrical System

Supervising and control of station auxiliaries electrical system will be carried out at the central control room of the power station. In the central control room, display, record and etc. of necessary information, announcement of alarms, operation of the electrical system and main electrical protections are provided.

(5) Black Start Capability

Considering the importance of this power plant in Cambodia, it is recommended that it has black-out start capability. That is, it is desirable that this power station is able to start without any external power supply. The emergency diesel generator system is requested to have sufficient capacity to supply necessary electric power for this purpose.

(6) In-Plant Substation Design Concept

In-plant substation is provided in order to get required operation scheme of generated power, starting power, transmitted power and etc. Main transformer, starting transformer and transmission lines are connected to this substation. The substation is of air-insulated open type.

According to MIME/EDC's plan, generated power of this plant will be sent not through Sihanoukville city area but directly to Kampot and Phnom Penh. In-plant substation will have necessary facilities for connecting transmission lines for such purpose.

The rated voltage of in-plant substation will be same as transmission line voltage which will be either 115 kV or 220 kV in accordance with EDC's standard voltage criteria. The transmission line from this power station is planed to be connected at Takeo with the transmission line between Phnom Penh and Vietnam to send electric power mainly to Phnom Penh network load. Therefore, the rated

voltage of in-plant substation will be 220 kV, same as one of the transmission line between Phnom Penh and Vietnam.

Usually, one of following substation bus systems can be applied to these voltage classes.

(a) Single bus system
(b) Double bus single circuit breaker system
(c) One and half circuit breaker system

Under the consideration of reliability, operationability and economics, double bus single circuit breaker system will be applied to this plant, in the same manner as one shown in the latest report by World Bank to EDC, dated August, 2000, "Feasibility Study for the first transmission link between Phnom Penh and the southern region of Cambodia".

Fig.6.6-9 shows outlined system configuration of each system.

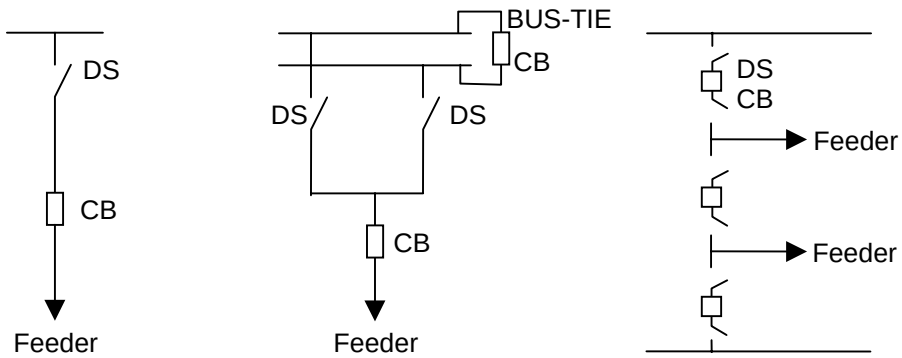

Single Bus Double Bus One and Half CB

CB: Circuit breaker DS: Disconnecting switch

Fig.6.6-9 System Configuration for In-Plant Substation

For selection of rated current of the transmission line in case of two circuits system for this project, one of the following three ways can be applied practically and will be selected considering construction schedule of power plant, operation-

ability, economics and etc.:

(a) One circuit of the transmission line has rated current sufficient to send total generated power of Stage 1 of the power plant (90 MW at rated power factor). In this case, two circuits can send 100% and one circuit can send 50% of total generated power of Stage 1 and Stage 2 of the power plant (180 MW at rated power factor).

(b) Two circuits of the transmission line have rated current sufficient to send total generated power of Stages 1, 2 and 3 of the power plant (270 MW at rated power factor). In this case, one circuit can send 100% of Stage 1 (90 MW), 75% of Stage 1 plus Stage 2 (180 MW) and 50% of total Stages 1, 2 and 3 (270 MW).

(c) One circuit of the transmission line has rated current sufficient to send total generated power of Stage 1 and Stage 2 of the power plant (180 MW at rated power factor). In this case, two circuit can send 100% and one circuit can send 67% of total generated power of Stages 1, 2 and 3 of the power plant (270 MW at rated power factor)

(7) Lighting System

The basic design concept for the lighting system will be based on international standards, regulations and practices applicable for thermal power plant. It will be designed so that each area or room such as central control room, switchgear room, turbine generator hall, road, in-plant substation and etc. may have suitable illumination level respectively, as necessary for its services and purposes.

Applicable lamp type and typical application will be shown as follows:

Type	Typical Application
Incandescent type (Tungsten, Tungsten halogen)	Emergency lighting, Flood light
Fluorescent type (Daylight, Natural)	General area, Control room, Office
High intensity discharge type (Mercury vapor, Sodium)	Outdoor area

Generally, emergency lighting system will be composed by about 10% of total number of lamps in the power plant and will be powered by normal auxiliary AC power for normal operation case and DC battery power for emergency case.

Obstruction lighting system, where necessary, will be provided in accordance with ICAO (International Civil Aviation Organization) regulations.

Applied lighting equipment, system and design will be determined as most suitable respectively for each area or room, considering luminous efficiency, economics, maintenance cost and etc.

(8) Grounding System

The grounding system will cover the whole site area of the power plant and in-plant substation, including the boundary fences. The basic design concept will be based on international standards, regulations and practices applicable for thermal power plant. In principle, the grounding system will be an integrated system in accordance with IEEE 80 for the whole site area. The integrated grounding system will consist mainly of copper conductor grid in mesh (hereinafter grounding grid) buried in the power plant area and in-plant substation area.

All electrical equipment and metallic structures will bonded to the grounding system in order to attain necessary ground resistivity and, where necessary, earthing rods may be applied and will be interconnected with the grounding grid.

(9) Lightning Protection System

The lightning protection will be designed in accordance with the National Fire Protection Association (NFPA) recommendations. Equipment, materials and installation used for lightning protection system will be as well proven. The lightning protection system will be properly erathed and interconnected with the grounding grid to form the integrated grounding system.

(10) Consideration for Future Extension

Taking economy into consideration, it is recommended that construction of the

in-plant substation will be carried out on step-by-step basis in coordination with the construction schedules of the power plant and transmission lines. System arrangement of the in-plant substation will be studied so that vital power supply interruption may not be caused due to extension works on step-by-step basis, considering operationability and economics.

Recommendable extension plan on step-by-step basis is as follows:

Step-1	:	Facilities for Stage 1 (90 MW) of the power plant and one circuit of the transmission lines to Kampot
Step-2	:	Facilities for Stage 2 (90 MW) of the power plant and second circuit of the transmission lines to Kampot
Step-3	:	Facilities for Stage 3 (90 MW) of the power plant.
Additional extension	:	Facilities for transmission lines to Sihanoukville city area and others.

Area plan for the in-plant substation includes necessary space for step-1, step-2, step-3 and additional extension. Appropriate area space will be arranged within the in-plant substation yard for future additional extension for the transmission line to Sihanoukville city area, including two circuits with step-down transformers, circuit breakers and other associated equipment.

(11) Recommendable Typical Scheme for Station Auxiliary Supply

Considering the above-mentioned conditions, recommendable typical scheme for station auxiliary electrical supply is shown as preferable in Fig.6.6-10.

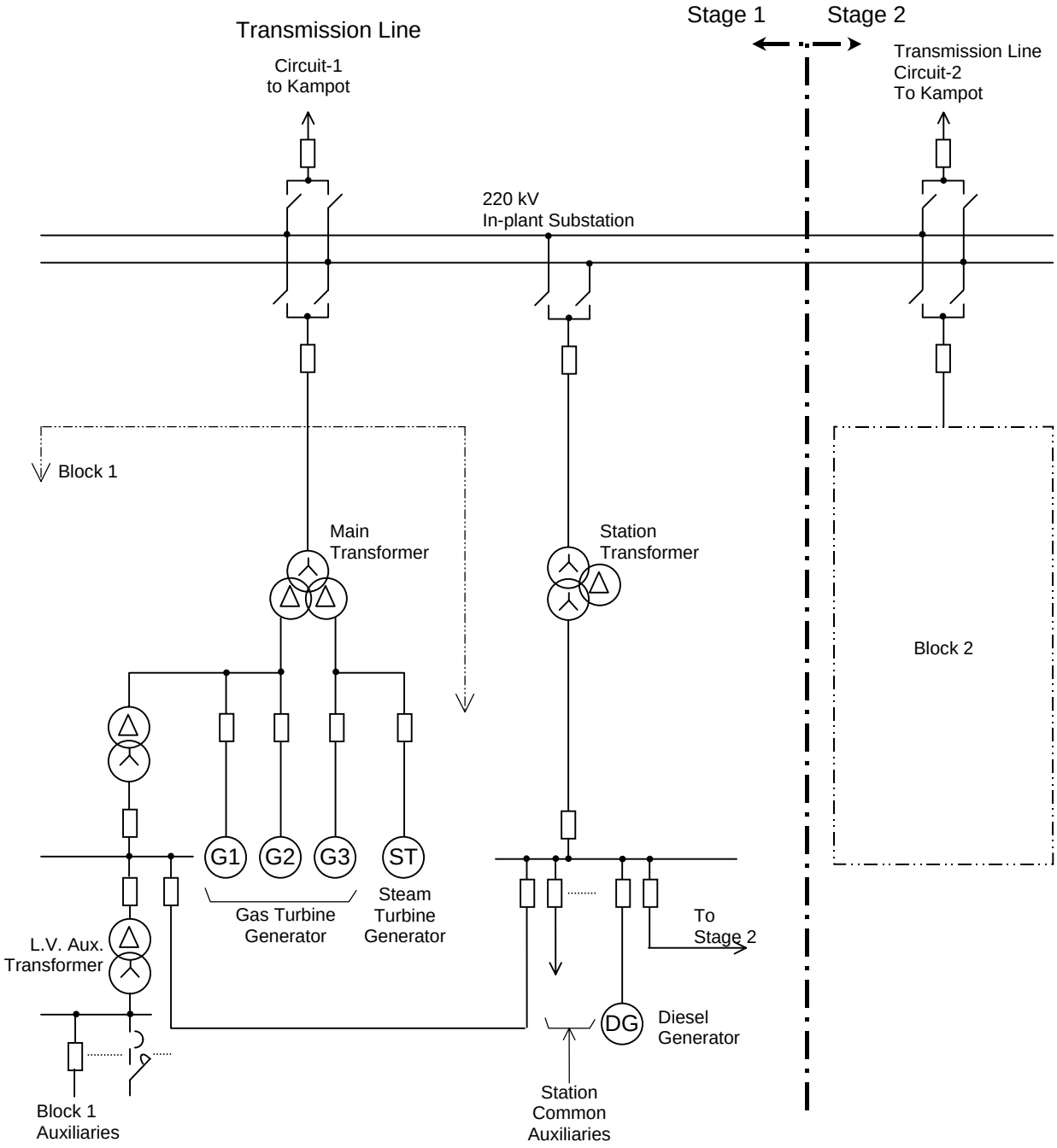

Fig.6.6-10 Preferable Typical Scheme for Station Auxiliary Electrical Supply

(12) Outlined Specification of Applied Equipment

Basic specifications of applied electric equipment are outlined below.

(a) EHV Equipment

The in-plant substation will be of air-insulated outdoor open type. Type and

specification of each applied equipment will be selected among proven and advanced technologies. Gas circuit breaker, air circuit breaker or oil circuit breaker will be applicable. All associated equipment such as circuit breakers, disconnecting switches, current transformers, potential transformers, bus conductors and etc. will be arranged suitably and neatly to satisfy technical requirements, easy local operation and easy maintenance works.

Gantry tower will be installed at the transmission line side and power station side to connect easily overhead conductors from the transmission lines and power station to the substation.

(b) Main Transformer

Oil-immersed and air- forced cooled (ONAF), or Oil-immersed and natural-air cooled (ONAN), outdoor.

(c) Station Transformer

Oil-immersed and natural-air cooled (ONAN), outdoor.

(d) Block Transformer

Oil-immersed and natural-air cooled (ONAN), outdoor.

(e) Generator Output Connection

Generator output connection is by segregated or non-segregated phase bus duct.

(f) High Voltage Switchgear

Metal-enclosed, vacuum circuit breaker applied, self-standing indoor type.

(g) Low Voltage Switchgear

Metal-enclosed, ACB or combination starter with MCCB and magnetic contactor applied, self-standing indoor type

6.6.9. Control and Supervising System

(1) Design Concept

In designing the control and supervising system, selection of reliable system configuration and equipment is very important and also operationability, maintenability and economics will have to be considered in whole system.

Configuration of control and supervising system shall be suitable for configuration and operation of the power plant. This system will have centralized control and supervising functions in central control room for the whole power plant and individual control, supervising and protection for each component such as gas turbine, heat recovery steam generator, steam turbine and etc. Furthermore, future extension and/or modification of control and supervising system will be taken into sufficient consideration.

(2) System Configuration

There are two major applicable schemes for configuration of central control and supervising system:

(a) Centralized control and supervising system based on large scale control computer technologies where all main functions are integrated in a large scale computer.
(b) Distributed control system (DCS) based on micro-computer technologies where control systems are distributed as per function

Recently, DCS scheme is applied preferably since micro-computer technologies have been remarkably advanced and, therefore, have given sufficient technical performances, reliability and economy. DCS scheme is to be applied to this power plant.

In order to reserve the reliability of the power generation and supply and the safety of the power plant facilities, the reliability of the control and supervising system plays very important roles. So, redundancy design concept such as duality shall be applied for vital control and supervising functions.

As a method to communicate a lot of information between distributed computers, digital communication technologies will be applied as much as possible under consideration of satisfactory technical performances, reliability and economy. Digital communication technologies have been understood to have satisfactory technical performances, reliability and economy due to their recent advancement.

An example of division of control and supervising functions is shown as follows for multiple shaft combined cycle plant:

- Station common control and supervising
  * Control and supervising of in-plant substation and station common electrical system
  * Management of main information of the power plant
- Data management for each stage (90 MW)
- Coordination control and steam turbine control & supervising for each stage (90 MW)
- Gas turbine control
- Heat recovery steam generator control

Human- machine interface equipment is arranged in most suitable manner for monitoring and operation in central control room and associated control equipment is arranged orderly in control equipment room next to the central control room in the power plant.

(3) Human-Machine Interface

Either one of the following two major ways can be selected for interface via control and supervising system with plant equipment, what is called, human-machine interface in central control room in the power station.

- Monitoring and operation by individual control and operation equipment such as indicating instrument and control switches which are mounted on large scale control panel
- Centralized monitoring and operation by digital display system such as CRT, what is called, CRT operation concept.

In recent years, CRT operation concept has been applied preferably since its response, display ability, reliability, economy and etc. are sufficiently satisfactory due to recent remarkably advanced digital technologies. For this power plant, CRT operation concept is preferably recommended

Operator's consoles are provided in most suitable allocation for operation and monitoring of the power plant. Also printing machines and hard copy machines for making copies of characters or graphics are installed in central control room.

Fig.6.6-10 shows a typical configuration of control and supervising system for multiple shaft combined cycle power plant. Similar configuration can be applied easily per plant equipment configuration for single shaft combined cycle power plant.

(4) In-House Communication Systems

Following two kinds of communication systems are provided to execute operation, maintenance and administrative works effectively and efficiently in the power station.

(a) Paging System

Loud speaker and handset telephone system is provided to give necessary instructions to the personnel associated with operation and maintenance.

(b) Private Automatic Branch Exchanging Telephone System (PABX telephone system)

Dial telephone system is provided to enable remote communication among all associated personnel for general purpose. This telephone system is to be connected to external public telephone system to enable talk with external telephones.

(5) Communication with Dispatching Center of EDC

Some exclusive communication way may be needed between the power station and the load dispatching center in Phnom Penh and next switching station. This

system serves the following:

(a) Sending out operation status information of the power plant including in-plant substation to the dispatching center.

(b) Sending out and receiving inter-trip signals to or from next switching station for protection of transmission lines

(c) Direct telephone system for communication with the next switching station and the dispatching center

For this system, two ways mentioned below are applicable preferably for this power station. Optical fiber cable system is recommendable more than power line carrier (PLC) system, at the view points of technical advancement, reliability and performance. To achieve higher availability of communication, it can be recommended to apply power line carrier system as back up system for optical fiber cable system.

These communication systems must be coordinated with associated projects of transmission line and substation installation at the viewpoints of extent of scope, terminal points and technical specifications.

(a) Optical Fiber Cable System

In this way, optical fiber cable is used as a route to carry communication signals. Either under-grounded optical fiber cable or optical fiber integrated overhead grounding wire (OPGW) can be applied for this power plant. These undergrounded optical fiber cable or optical fiber integrated overhead grounding wire (OPGW) will be installed separately from this project.

Electrical signal to optical signal converter equipment which will be installed within power plant area will be included in scope of this project.

All signals sent out from or received in the power plant will be interfaced at this electrical signal to optical signal converter equipment.

The report by the world bank “Feasibility study for the first transmission link between Phnom Penh and the southern region of Cambodia” dated August 2000 shows the application of OPGW for communication system and, also

for this project, OPGW is most recommendable. Generally, installation of OPGW is carried out as installation works of overhead grounding wires which are always necessary for transmission lines and therefore, no extra work will be required further.

This system installed in the power plant will be coordinated in view point of technical specification with opposite system of the next substation or the dispatching center in Phnom Penh.

(b) Power Line Carrier (PLC) System

In this way, conductors of transmission lines will be used as a route to carry communication signals. All equipment such as line trap, coupling capacitor, modem and etc. will be provided in scope of the power plant and will be arranged within the power plant area. Applicable frequency band will be specified and permitted by the authority of Cambodia.

These system will be coordinated in view points of technical specification with opposite system of the next substation or the dispatching center in Phnom Penh.

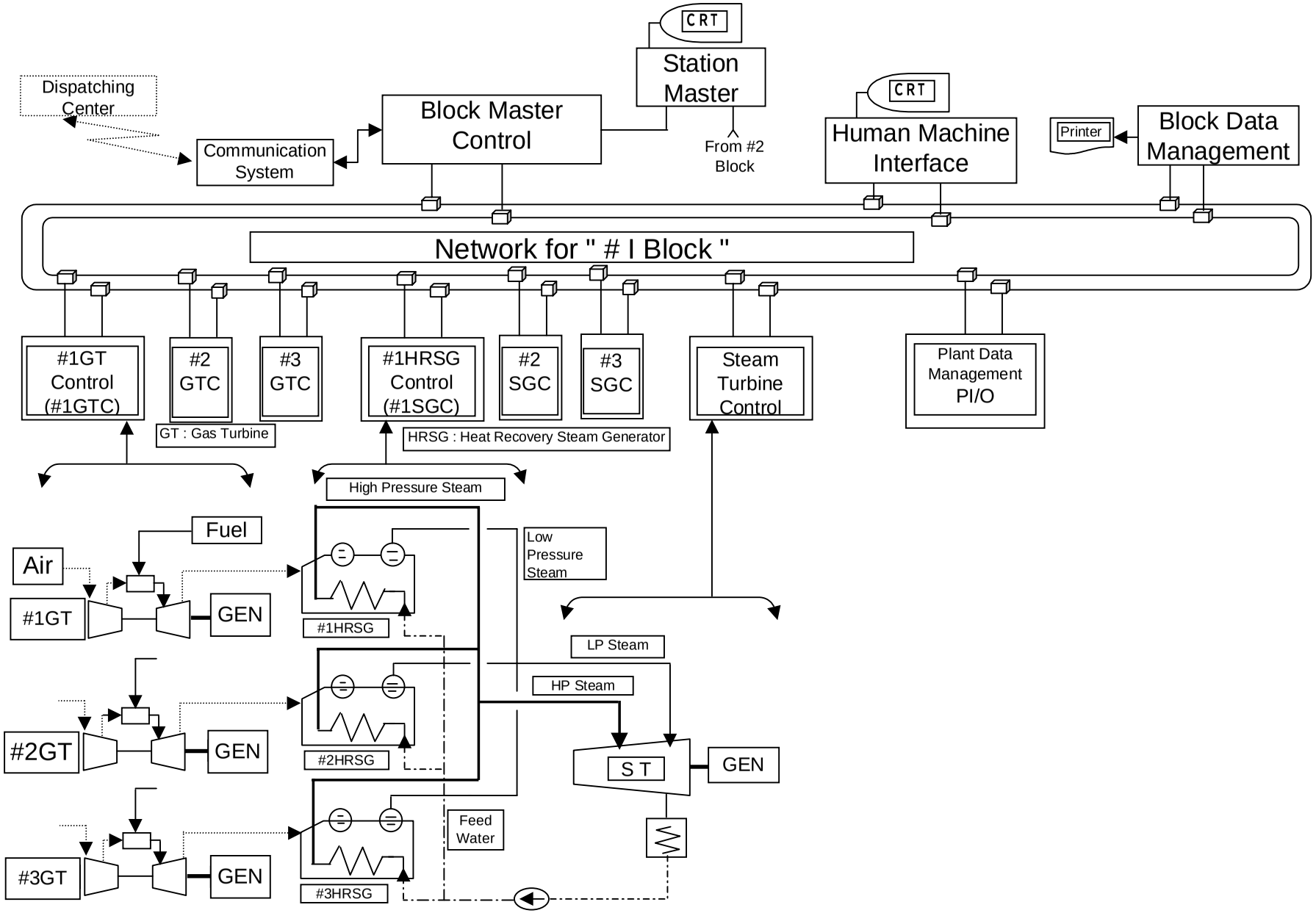

Fig.6.6-11 Typical Control and Supervising System for Multi-Shaft Combined Cycle Power Plant

6.6.10. Fire Protection System

The fire protection system will be provided to minimize the damage by a fire for the power plant equipment and buildings.

The system will comprise fire detection and fire fighting system.

A main fire detection panel will be located in the central control room of power plant and a local fire panel will be located in each block area. Fire fighting system will be able to be started in the main fire detection panel or local fire panels.

Fire fighting system of non attended equipment and region (i.e. outdoor transformers, oil tanks, etc.) will be actuated automatically by the fire alarm signals of the detectors.

Each fire protection system will form a complete system as defined by the National Fire Protection Association (NFPA) Codes and recommended practices.

(1) Fire Detection and Alarm System

Smoke and heat detectors will be provided to detect the fire for major equipment and buildings.

Push button alarm device will be provided in the fire protection cabinets located indoors and outdoors.

(2) Water Fire-Fighting System

(a) Water Supply System

Prey Treng pond will be applied for the source for water fire fighting system.

The raw water will be fed by two duplicate 100 % duty fire pumps with different driver. One will be of motor driven and the other will be of diesel driven.

In the event of a fire, the motor driven fire pump will start automatically by a

signal of a fire from the fire alarm system or a low pressure signal in the fire water main. The diesel driven fire pump, which serves as a back up facility, will start when no electric supply and/or low pressure in the fire water mains.

Duty and standby Jockey pumps will be provided to maintain the pressure in the mains.

(b) Water Deluge System

An automatic water deluge system will be provided for the following equipment, which has a high potential risk of a fire, to spray high velocity water on its surface.

- Oil cooled transformers
- Gas and steam turbine oil tank and oil purifier
- NG pressure reducing station (if any)
- Fuel oil storage tanks
- Fuel oil tank for emergency diesel generator

(c) Sprinkler System

An automatic sprinkler system will be provided for the administration building, warehouse and workshop, fire pump house and all other auxiliary houses.

The system is normally pressurized and in the event of a fire, the fusible metal at the sprinkler head will be fused by the heat of a fire and then the water will be sprayed through the sprinkler head.

(d) Fire Hydrant System

The fire hydrants will be installed by the oil storage tank yard, the power plant area and auxiliary houses.

Location of each hydrant will be so arranged that any part of the equipment and buildings/houses will be practically near to the hydrant for the execution of fire fighting. Hydrant boxes will be provided adjacent to each hydrant. A flexible hose with nozzle and coupling will be stored in the hydrant boxes.

(3) Foam Fire-Fighting System

A fixed foam fire fighting system will be provided for the fuel oil tanks and the oil pumping units.

In the event of a fire, the foam fire fighting system will automatically supply the foam water solution into the tank void space to cut off the supply of air required for firing.

The outdoor foam hydrants will be provided for fuel oil storage tank yard. The foam hydrants will be operated by manual.

(4) CO_2 Extinguishing System

The carbon dioxide (CO_2) system will be provided for the following area, where use of wet system is not suitable:

- Substation
- Battery room

The carbon dioxide (CO_2) system will be also applied for the gas and steam turbine generator bearings to prevent the hot parts from sudden cooling.

This system is not suitable for the place where personnel always exist in, and the alarm signal shall be given for personnel to allow safe escape when the carbon dioxide (CO_2) system is activated.

(5) Portable Extinguisher and Fire Engine

(a) Portable extinguisher

Hand operated dry chemical or carbon dioxide (CO_2) fire portable extinguishers will be provided for all buildings/houses.

The type of the portable extinguisher will be chosen according to the categories of protected equipment and classes of potential fires. The carbon dioxide (CO_2) portable extinguisher will be applied to prevent electrical equipment from moisture.

(b) Fire Engine

One fire engine will be provided with all accessories and equipped with water tank, dry chemical powder tank, foam tank, compartment to store all equipment and accessories required for fire fighting, water suction ant delivery opening, reel, hose, fire pump and portable fire pump complete with all accessories and spare parts.

6.6.11. Design of Foundation

(1) Foundation of Civil Structure

(a) Basic Idea of Foundation

Foundation of main structures and equipment in the site area is classified into the followings:

- Shallow foundation
- Piles
- Soil improvement
- Combination of the above

Type of foundation is so selected to assure safety against external forces, considering geological ground condition, load condition, type of equipment to be build on the ground, and economical condition.

In/around the site area, overburden on the basic rock layer of sandstone/ silt-stone consists of mainly sand, silty sand and clayey soil layers interbedded between them.

Allowable ground bearing capacity q_a is approximately estimated from SPT value N as below:

For gravel layer	:	$q_a = N/2$	(tf/m^2)	=	4.9 N kPa
For sand layer	:	$q_a = N$	(tf/m^2)	=	9.8 N kPa
For clay layer	:	$q_a = 2.5N$	(tf/m^2)	=	24.5 N kPa

(b) Oil Storage Tank

Oil storage tank is located on the ground surface at the northeast part of the plant area as shown in Fig.6.6-12.

Based on the soil/rock test result at borehole BH-7 and borehole BH-2 near the oil tank location, the SPT values are as below:

	SPT value	
Borehole BH-7	approximately 9	(below EL. + 4.0 m)
Borehole BH-2	> 50	(below EL. + 4.0 m)

Considering the SPT value at BH-7 for safety, shallow foundation can be applied by improving partly the ground by replacing soil.

Approximately 1 m depth of soil layer shall be replaced by compacted sand layer with d_{50} being more than 2 mm to avoid any consolidation and liquifaction. The foundation of the oil storage tank is as shown in Fig.6.6-13.

(c) Heavy Equipment such as HRSG, Gas Turbine, etc.

Heavy equipment, such as HRSGs, gas turbines, steam turbine, and main transformers will be located in or next to the powerhouse.

The location is around borehole BH-3, where thick overburden of silty sand with SPT value of approximately 10 below - 2 m has approximately 10 tf/m^2 (= 9.8 kPa) bearing capacity for shallow foundation.

When driven piles are used, considering the supporting layer being below EL. - 10.0 m, design capacity will be estimated by the formula such as:

$$Ra = \frac{1}{3}\left\{30\overline{N}Ap + \left(\frac{\overline{N}s\,Ls}{5} + \frac{\overline{N}c\,Lc}{2}\right)\varphi\right\}$$

Where, Ra : Long term bearing capacity (tf)

$\overline{N}$: SPT value averaged between -d to 4d from the tip of pile

d : Diameter of pile

Ap : Cross section of pile (m^2)

$\overline{N}s$: Averaged SPT value in sandy layer

Ls : Thickness of sandy layer

$\overline{N}c$: Averaged SPT value in clayey layer

Lc : Thickness of clayey layer

φ : Perimeter of pile (m)

This criteria is referred from Foundation design Criteria of AIJ. Foundation of heavy equipment is as shown in Fig.6.6-14.

(d) Foundation of Intake and Outlet Structures

Intake and outlet structures will be located offshore westward of the site with a water depth of approximately 5 m as shown in Fig.6.6-12. Pipes connecting between the intake and intake pump pit, and between outlet and discharge pit will be buried underground.

a. Foundation of Intake Structure

Boring log at borehole BH-10 shows the geological condition of foundation of the intake structure.

The SPT value exceeds 50 below EL. - 12.0 m, where basic rock of sandstone spreads widely. Overburden that consists of sand with very loose, 0 SPT value, should be replaced by rubble stones and reinforced soil as shown in Fig.6.6-15. Thickness of rubble stone should be more than 1.5 m.

Reinforced soil shall be put on the rubble stone to make foundation of intake. Reinforced soil is made of mixture of excavated soil, cement and clay with mixture rate as below:

Sand	100%	(weights)
Cement	7.5 %	(weights)
Clay	more than 30%	(weights)

Water content shall be so adjusted to obtain a slump value of approximately 5 mm.

b. Foundation of Outlet Structure

Boring log at borehole BH-13 shows the geological condition at the outlet structure. Sand stone layer spreads below elevation of EL. - 14.50 m, with approximately 10 m overburden of sand on the sandstone.

Foundation of the outlet structure is similar to that of the intake structure, but the extent of replacing sand is limited due to rather deep bed rock elevation as shown in Fig.6.6-16.

c. Foundation of Pipeline in Offshore Area

Pipes are buried under the seabed with a depth of approximately 2 m below the seabed.

Foundation shall consist of 0.5 m thick rubble stone layer and reinforced soil covering pipes on it. All structure will be covered by refilling the original sand as shown in Fig.6.6-17.

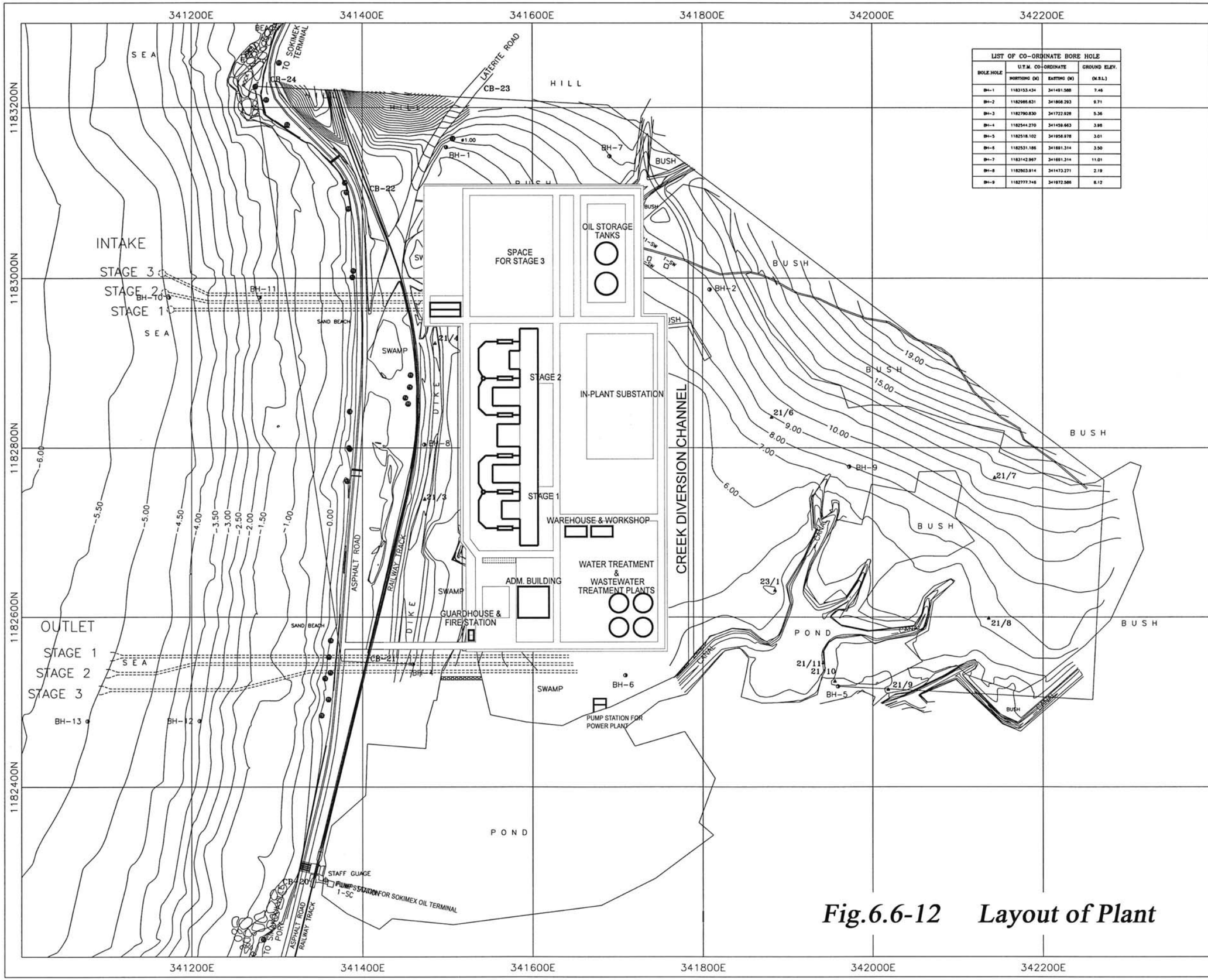

LIST OF CO-ORDINATE BORE HOLE			
BOLE.HOLE	U.T.M. CO-ORDINATE		GROUND ELEV.
	NORTHING (M)	EASTING (M)	(M.S.L.)
BH-1	1183133.434	341491.588	7.46
BH-2	1182986.631	341808.293	9.71
BH-3	1182790.830	341722.928	5.36
BH-4	1182544.270	341459.663	3.95
BH-5	1182518.102	341958.978	3.01
BH-6	1182531.186	341691.314	3.50
BH-7	1183142.967	341691.314	11.01
BH-8	1182803.914	341473.271	2.19
BH-9	1182777.746	341972.586	8.12

LEGEND

- PERMANENT HORIZONTAL AND VERTICAL CONTROL
- TRAVERSE STATION (TEMPORARY)
- WATER PIPELINE
- SPOT HIGHT
- CONTOUR LINE INTERVAL 0.50 M.
- BORE HOLE
- BUILDING
- 1-SW ONE STOREY WOODEN HOUSE
- 1-SC ONE STOREY CONCRETE HOUSE
- TREES PERIMETER
- #X.XX TREE WITH STEM DIAMETER
- BOUNDARY LINE

NOTES

1. THE CO-ORDINATE AND ELEVATION WAS REFERED FROM G.P.S. "CB-11"
2. THE CO-ORDINATES WHERE SHOWN IN THIS DRAWING ARE U.T.M. CO-ORDINATE.
3. THE ELEVATION REFERED FROM MEAN SEA LEVEL.
4. MORE INFORMATION SEE SURVEY REPORT.

LIST OF CO-ORDINATE CONTROL POINT

STA.	U.T.M. CO-ORDINATE		ELEVATION	REMARKS
	NORTHING (M)	EASTING (M)	(M.S.L.)	
CB-11	1176532.855	337612.506	8.460	CONCRETE MONUMENT
CB-20	1182292.327	341341.277	3.346	CONCRETE MONUMENT
CB-21	1182557.109	341405.936	3.102	CONCRETE MONUMENT
CB-22	1183102.181	341405.512	3.442	CONCRETE MONUMENT
CB-23	1183221.407	341538.451	20.223	CONCRETE MONUMENT
CB-24	1183220.930	341291.716	2.320	CONCRETE MONUMENT
CB-25	1185379.873	346353.658	18.428	CONCRETE MONUMENT
CB-26	1185144.836	350827.338	3.272	CONCRETE MONUMENT
CB-27	1185075.592	350795.057	2.455	CONCRETE MONUMENT

0 25 50 100 150 200 m.
SCALE

No.	REVISION	APPROVE	DATE

CONSULTANTS
NEWJEC
NEWJEC INC.
OSAKA JAPAN

PROJECT
SIHANOUKVILLE
CCGT FEASIBILITY STUDY
SIHANOUKVILLE, CAMBODIA

TITLE

ARCHITECT		
STRUC. ENGINEER		
CIVIL ENGINEER		
ENVIR. ENGINEER		
SURVEY ENGINEER		
DRAWN BY		SHEET No.
CHECKED BY	DATE	DATE
APPROVED BY	DATE	SCALE

Fig.6.6-12 Layout of Plant

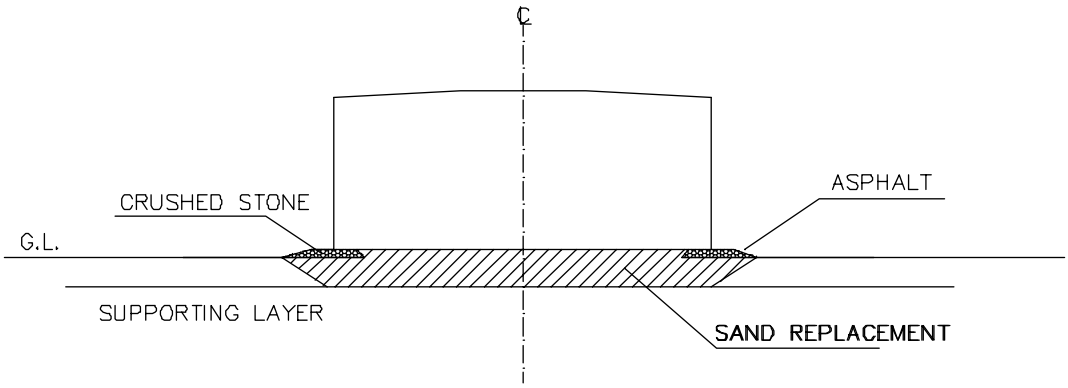

Fig.6.6-13 Foundation of Oil Storage Tank

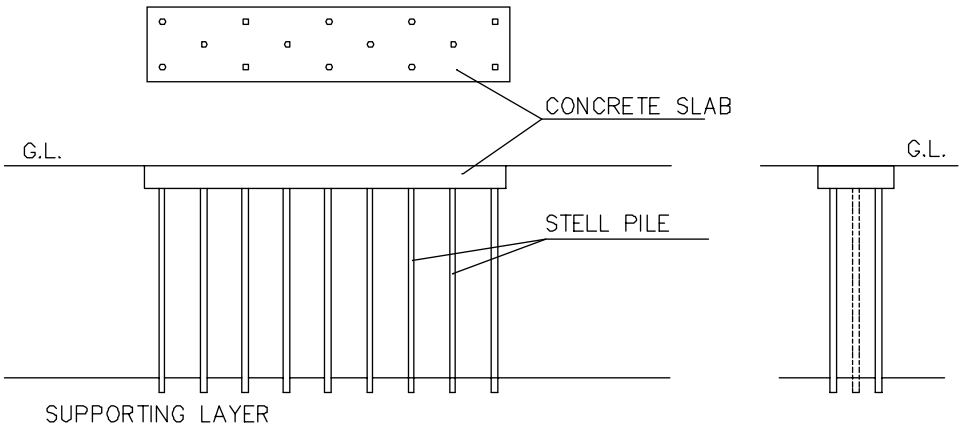

Fig.6.6-14 Foundation of Heavy Equipment

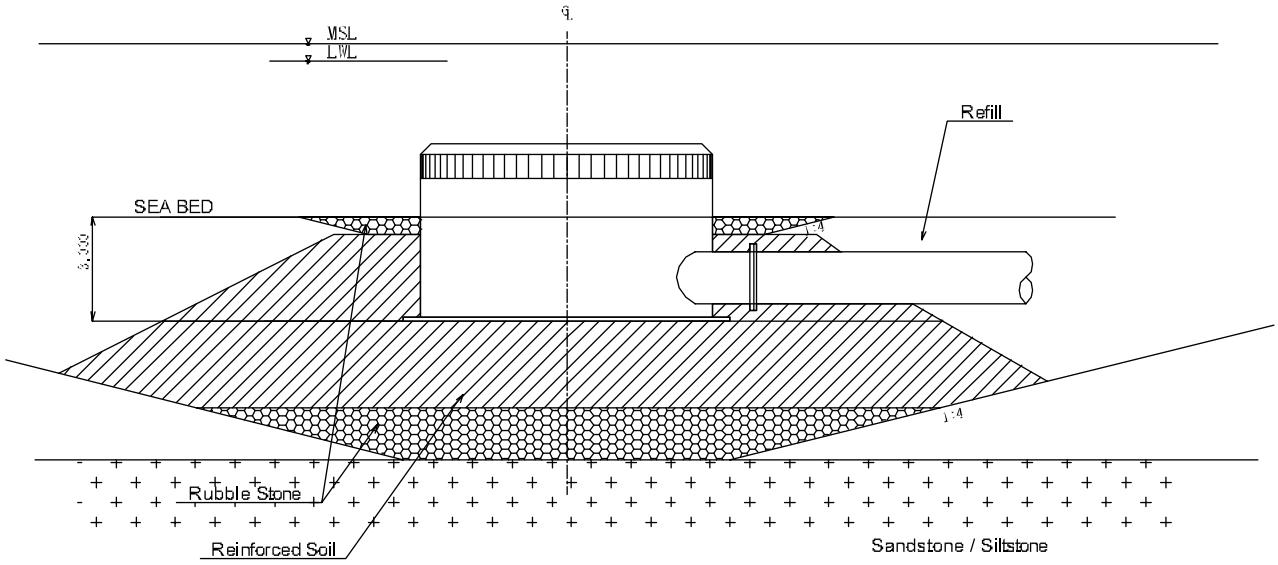

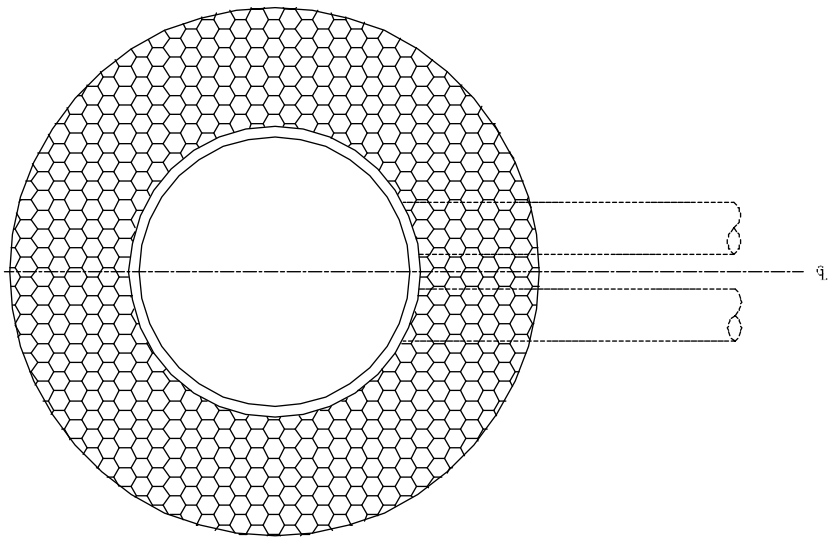

Intake (for one stage, 90MW)

Fig.6.6-15 Foundation of Intake Structure

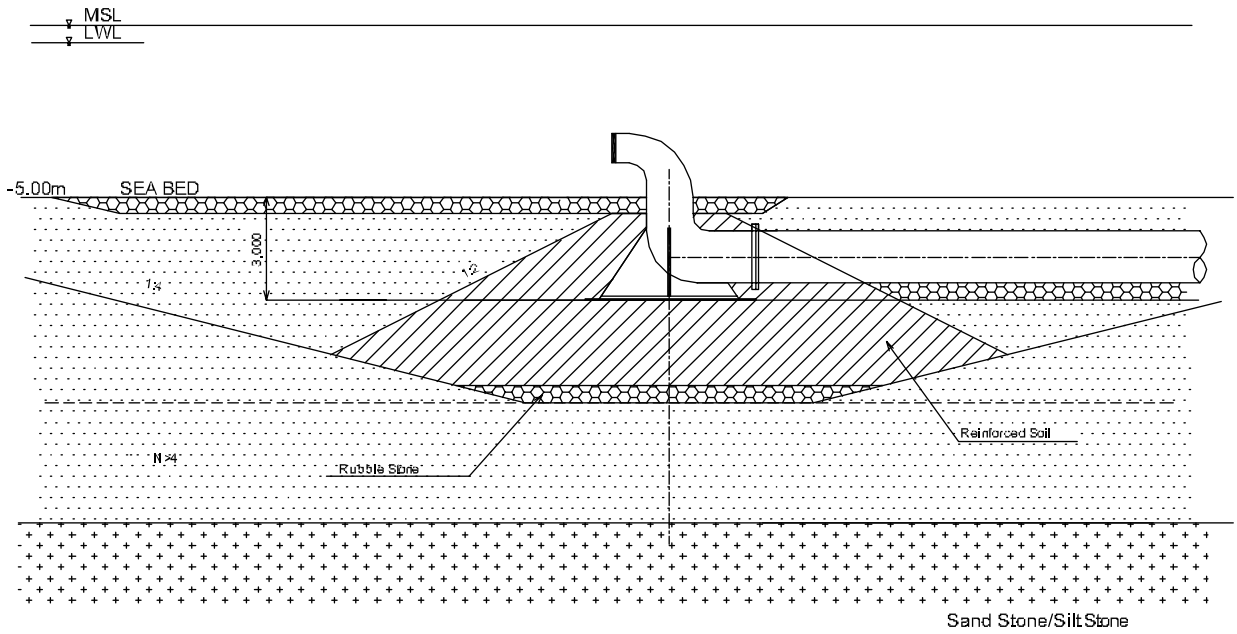

Discharge Outlet (Two for 90 MW)

Fig.6.6-16 Foundation of Discharge Outlet Structure

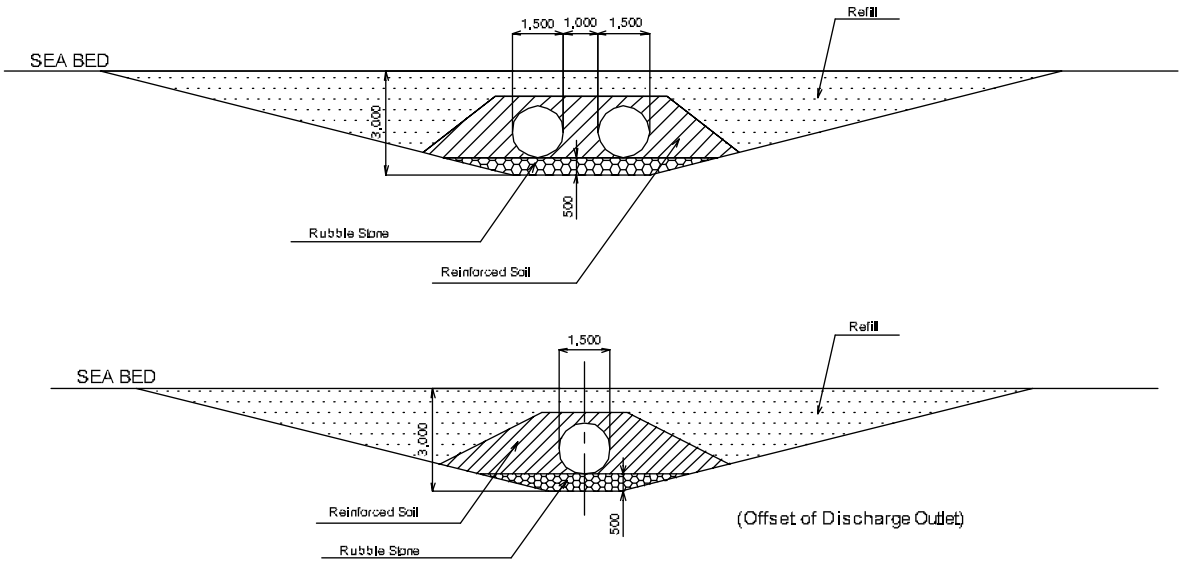

Buried Pipes

Fig.6.6-17 Foundation of Offshore Cooling Water Pipes

6.6.12. Building Work

(1) General

Buildings and the related architectural structures required to the gas turbine combined cycle power plant are mainly as follows;

(a) Main Buildings

1) powerhouse inclusive of central control room, gas turbine room, steam turbine room, electrical room, pump room, emergency diesel generator room, etc.
2) administration building

(b) Ancillary Buildings

3) workshop
4) warehouse
5) canteen building
6) guard house
7) water treatment house

(c) Outdoors

8) fuel gas stack
9) perimeter wall fence
10) gardening

Buildings and structures listed above will be designed and constructed based on the related regulations and standards in Cambodia (if any) and/or applicable international codes if necessary, to meet the requirements of power plant operation. All the buildings, those are properly equipped as required, shall be endurable over thirty years with easy maintenance, and shall be considered energy conservation and minimizing environmental affect.

(2) Site Condition for Building Design

Buildings are designed and specified in consideration with the site conditions shown below.

(a) Meteorological Condition

1) wind speed; 26.9(m/s): provable wind speed with return period over 50 yeas
2) rainfall; 127.3 (mm/hr): provable rain fall with return period over 50 years
3) atmosphere; sea coast, heavily salt laden atmosphere
4) average temperature; D.B.T. 28.8 (°C)
5) average relative humidity ; 81 (%)

(b) Geological Condition

The ground surface of the site is layered with silt and sand at 10 ~ 15 m deep on sand stone layer (N > 50) as shown on the geological survey data. In this land condition, consideration will be given to structural design of the building. It is necessary for foundation of main buildings and structures to be reinforced with concrete piles and the like for keeping their position against unequal subsidence.

(c) Seismic Condition

Earthquake over magnitude 4 has never been recorded in Cambodia as referred to the world earthquake distribution chart (M > 4, 1970 ~ 1985) shown in Section 6.2.5.

In this condition, following seismic design criteria will be applied to the Project;

$$Cd = C \bullet I \bullet K$$

Where: Cd : equivalent seismic coefficient at the ground level

C : base seismic coefficient of 0.05

I : importance factor of building and structure

K : structural type factor

Vertical seismic load will not be considered.

(3) Main Buildings and Structure

(a) Powerhouse

Powerhouse houses six (6) gas turbine generators, two (2) steam turbine generators and their associates equipment for the Stage 1 of 90 MW and Stage 2 of 90 MW as shown on the attached drawing. The powerhouse for Stage 1 should be provided with preparatory joint structure and covering walls for Stage 2 extension.

Central control room, electrical room, emergency generator room, pump room and the other ancillary rooms will be arranged in the powerhouse. The central control room to be constructed in Stage 1 will be planned to have enough floor area to allow installation of control equipment through the whole stages. The electrical room including battery charger and rectifier room will be situated below the central control room in which rest room with locker space will also be provided for operation staff use.

The powerhouse will be framed by structural steel of superstructure and be supported by pile foundation, and its exterior walls and roof shall be finished with corrugated steel sheet. Waterproof roof and drainage system should be designed to resist heavy rain.

(b) Administration Building

The administration building will be located at the entrance of the power plant site, which is served as a staff office and a visitor point for easy superintendence. It will be necessary to arrange office room, conference room, guest room, directors room, communication computer room, chemical laboratory, and sanitary rooms in the building.

The building to be constructed in Stage 1 will be of two stories with reinforced concrete made, and be sized enough to cover accommodation through whole stages as requested.

(c) Ancillary Building

Workshop ; mechanical and electrical workshop will be provided with

tool shelves and a lifter in the building for repairing and inspection of machines. A staff room with locker space and a shower booth is also provided. The building will be made of structural steel with steel corrugated sheet roof and walls.

Warehouse	;	warehouse, which stores spare parts and inventories, will be provided beside the workshop. The building of warehouse will be made of structural steel with steel corrugated sheet roof and wall.
Guard house	;	in adjacent to the administration building, the guard house is situates by the entrance gate for security purpose.
Canteen building	;	the canteen building will also be provided for serving meal and rest to the staff near the administration building.
Water treatment house	;	for water treatment equipment including chemical injection system, the water treatment house will be provided, which is reinforced concrete made. A stock room of water treatment chemicals is also needed in the house.

(d) Outdoors

Stack, site perimeter fence, gardening and so on will be necessary to complete the work of power plant.

(4) Ventilation and Air-conditioning System

The recommended design condition and configuration of ventilation/air conditioning system are as follows;

(a) Design Condition

1) Outdoor air condition

Dry bulb temperature; 33°C, Relative humidity; 81%

2) Indoor air condition

1. Air conditioned rooms

   Dry bulb temperature ; 25°C, Relative humidity ;50 ± 5%

   For control equipment rooms ; 23~24°C will be preferable

2. Gas/steam turbine generator room, auxiliary rooms, etc.

   Dry bulb temperature ; 38°C max. (outdoor air temperature +5°C)

   Mechanical ventilation will be provided for keeping the limit.

(b) Requirement for Main Building, Rooms

Building/area	Ventilation	Air conditioning
1) Powerhouse		
1. Gas/steam turbine generator room	Mechanical ventilation Gravity vent galleries + Cooled roof fans, w/filtered intake (*$N_{A/C} \geq 15$)	--------
2. Battery room	Mechanical ventilation w/filtered intake ($N_{A/C} \geq 10$)	--------
3. Electrical room and Other aux. room	Ditto ($N_{A/C} \geq 5$)	--------
4. Central control room, relay room	--------	Packaged A/C (dual system)
2) Administration building		
1. Office and attended room	--------	Packaged A/C
2. Other normally unattended room	Mechanical ventilation w/ filtered intake	---------
3) Ancillary buildings, such as workshop, warehouse and other enclosed area	Mechanical ventilation or Natural ventilator	----------

*Note: Number of air changes per hour

6.7. Plant Layout

6.7.1. Site

The site is located approx. 9-km north-northeast of the center of Sihanoukville City and approx. 2 km south of Sokimex Oil Terminal.

The site is relatively flat and Prey Treng Pond is located on the south side of the site. A hill with approx. 80-m height is on the northeast side of the site and there is a by-pass leading to TELA's oil facilities which is under construction halfway up the hill.

Provincial road leading to Sokimex Oil Terminal and a railway linking Sihanoukville with Phnom Penh are passing on the west side of the site, facing the calm sea in the west over natural coast.

6.7.2. Plot Plan

Fig. 6.7-1 shows the plot plan of the combined cycle power station. The area of power station premises will be approx. 13.1 ha.

(1) Power Plant Zone

Power plants of Stage 1 and 2 will be located in the center of the site and the ex-tension space for Stage 3 will be taken up on the north side of Stage 1 and 2 area.

Fig.6.7-2 shows the general arrangement of the power plant.

(2) In-plant Substation Zone

In-plant substation area will be located on the east side of power plant area in consideration of the transmission line route from the substation to Kampot, which is to the northeast from the power station, and prevention of direct attack of sea breeze. The extension space for Stage 3 is included in the area. The substation area will be also located midway between Stage 1 and Stage 3 power plants in consideration of the bus duct connection between each generator transformer and

the substation.

Furthermore, a future extension space will be taken up in the east part of the in-plant substation area to supply power to Sihanoukville City and an industrial zone that is under planning.

(3) Oil Storage Yard

Oil storage yard will be located in the north part of the site because Sokimex Oil Terminal lies on the north side of the site. Two diesel oil storage tanks will be installed for Stage 1 and Stage 2 in the yard. An extension space will be taken up in the north part of the yard to install an additional future tank for Stage 3.

(4) Administration Zone and Access

An administration building will be located on the south side of power plant area. The building faces the sea (the west) and there is an open space with garden and parking lots in front of the building. There is Prey Treng Pond on the south side of the building.

An access from the existing provincial road to the power station will be located in the southwest part of the site and a guardhouse and a fire station will be installed at the entrance of the power station.

(5) Other Zones

Cooling water pump pit is located in the northwest part of the site and discharge pipes are located in the southwest part of the site to ensure sufficient intervals between intake and discharge points of cooling water.

Water treatment plant and wastewater treatment plant is located in the south part of the site because Prey Treng Pond as fresh water source is on the south side of the site.

Warehouse and workshop are located near the Stage 1 power plant zone.

6.7.3. Ground Level of the Site

The ground elevation of the site will be approx. 4.1 m above MSL, considering soil work balances in the power station premises. In this case, excavation soil volume and filling soil volume will be approx. 95,000m^3 respectively and will be balanced.

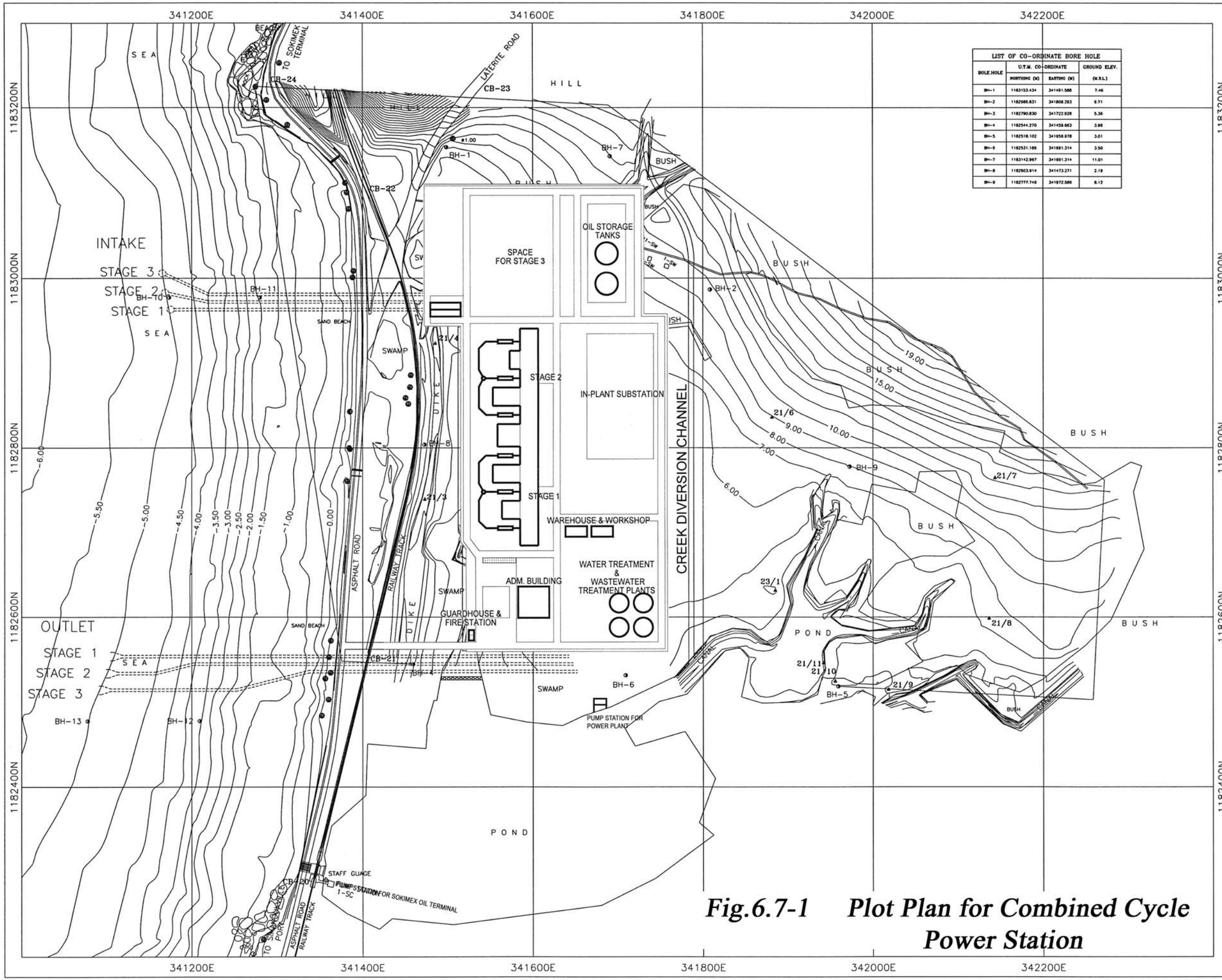

LIST OF CO-ORDINATE BORE HOLE			
BOLE.HOLE	U.T.M. CO-ORDINATE		GROUND ELEV.
	NORTHING (M)	EASTING (M)	(M.S.L)
BH-1	1183153.434	341491.588	7.46
BH-2	1182986.631	341808.293	9.71
BH-3	1182790.830	341722.928	5.36
BH-4	1182544.270	341459.663	3.95
BH-5	1182518.102	341958.978	3.01
BH-6	1182531.186	341691.314	3.50
BH-7	1183142.967	341691.314	11.01
BH-8	1182803.914	341473.271	2.19
BH-9	1182777.746	341972.586	8.12

LEGEND

- PERMANENT HORIZONTAL AND VERTICAL CONTROL
- TRAVERSE STATION (TEMPORARY)
- WATER PIPELINE
- SPOT HIGHT
- CONTOUR LINE INTERVAL 0.50 M.
- BORE HOLE
- BUILDING
- 1-SW ONE STOREY WOODEN HOUSE
- 1-SC ONE STOREY CONCRETE HOUSE
- TREES PERIMETER
- #X.XX TREE WITH STEM DIAMETER
- BOUNDARY LINE

NOTES

1. THE CO-ORDINATE AND ELEVATION WAS REFERED FROM G.P.S. "CB-11"
2. THE CO-ORDINATES WHERE SHOWN IN THIS DRAWING ARE U.T.M. CO-ORDINATE.
3. THE ELEVATION REFERED FROM MEAN SEA LEVEL.
4. MORE INFORMATION SEE SURVEY REPORT.

LIST OF CO-ORDINATE CONTROL POINT

STA.	U.T.M. CO-ORDINATE		ELEVATION	REMARKS
	NORTHING (M)	EASTING (M)	(M.S.L)	
CB-11	1176532.855	337612.506	8.460	CONCRETE MONUMENT
CB-20	1182292.327	341341.277	3.346	CONCRETE MONUMENT
CB-21	1182557.109	341405.936	3.102	CONCRETE MONUMENT
CB-22	1183102.181	341405.512	3.442	CONCRETE MONUMENT
CB-23	1183221.407	341538.451	20.223	CONCRETE MONUMENT
CB-24	1183220.930	341291.716	2.320	CONCRETE MONUMENT
CB-25	1185379.873	346353.658	18.428	CONCRETE MONUMENT
CB-26	1185144.836	350827.338	3.272	CONCRETE MONUMENT
CB-27	1185075.592	350795.057	2.455	CONCRETE MONUMENT

0 25 50 100 150 200 m.
SCALE

No.	REVISION	APPROVE	DATE

CONSULTANTS
NEWJEC
NEWJEC INC.
OSAKA JAPAN

PROJECT
SIHANOUKVILLE
CCGT FEASIBILITY STUDY
SIHANOUKVILLE, CAMBODIA

TITLE

ARCHITECT		
STRUC. ENGINEER		
CIVIL ENGINEER		
ENVIR. ENGINEER		
SURVEY ENGINEER		
DRAWN BY		SHEET No.
CHECKED BY	DATE	DATE
APPROVED BY	DATE	SCALE

Fig.6.7-1 Plot Plan for Combined Cycle Power Station

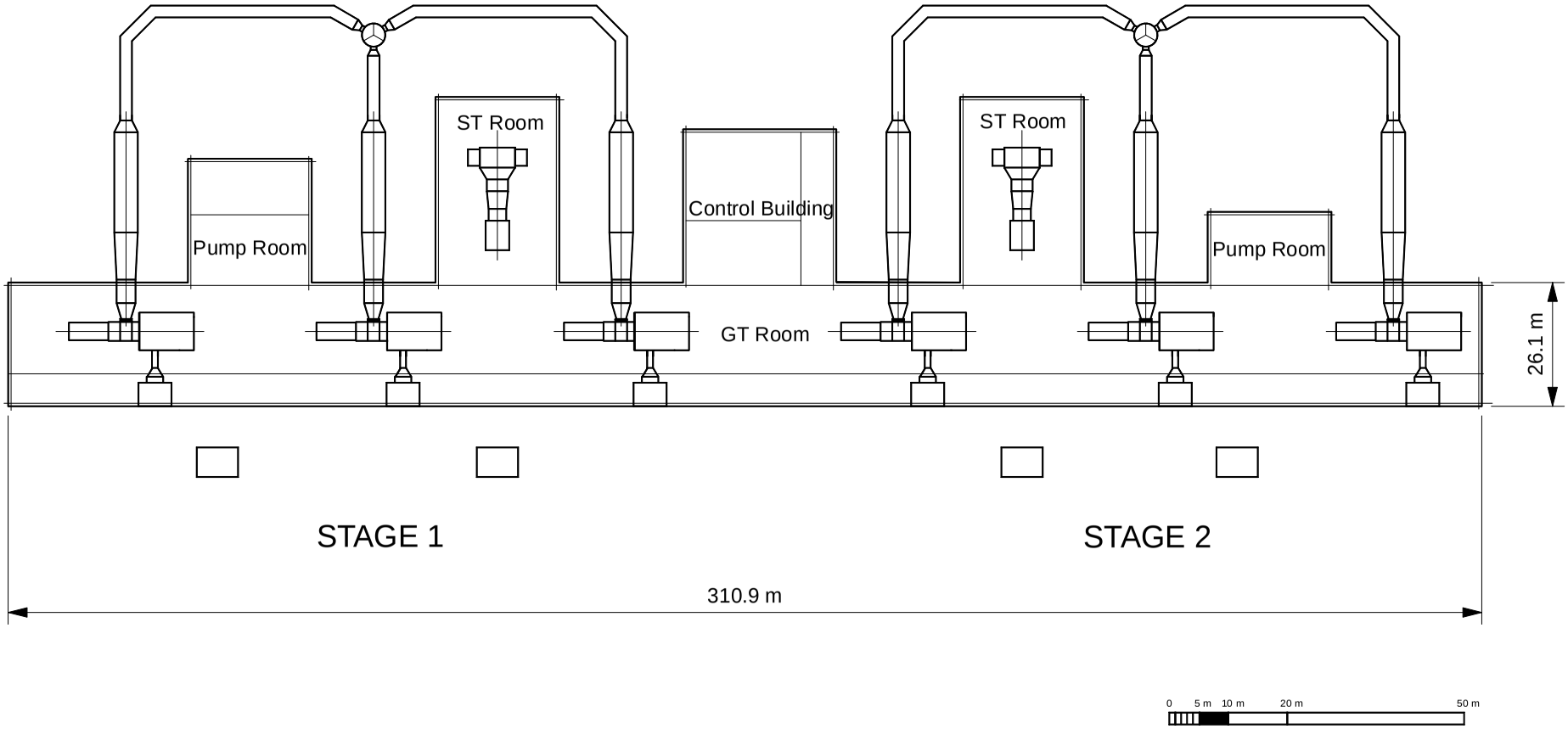

Fig.6.7-2 General Arrangement of Power Plants