LAYOUT PLAN S = 1 : 200

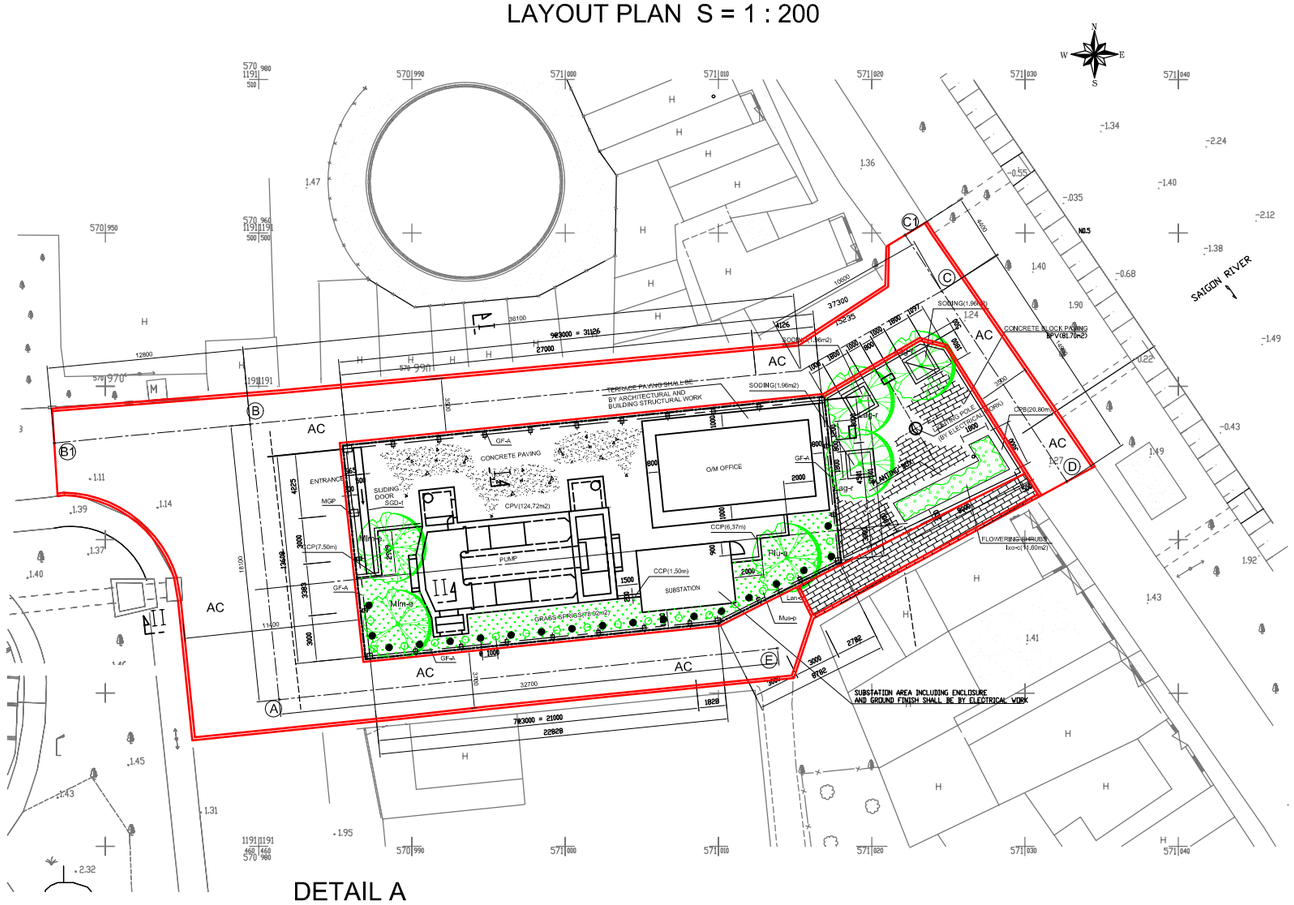

CROSS SECTION II S = 1 : 100

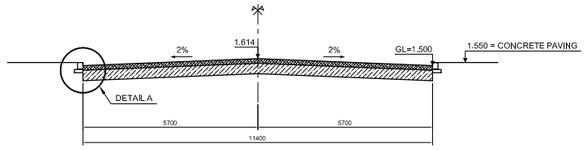

CROSS SECTION I S = 1 : 100

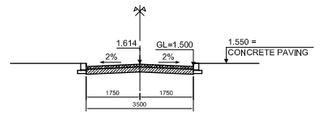

PAVEMENT STRUCTURE OF OUTSIDE ROAD OF THANH DA PUMPING STATION

No	Name of road	Design wide (m)			Length	Detail Quantity of Pavement (m³)				Pavement
		Road bed	Pavement	Side walk	(m)	A.C Wearing	A.C Binder	Agg. 2-4 Base	Agg.4-6 Subbase	area (m²)
1	A - B - C - D - E	3.50 11.4	3.50 11.4	0.00	113	35.00	35.00	131.00	138.00	690

PLANT LIST: PACKAGE B (THANH DA - PUMPING STATION) PB-PDI-TD-218

LEGEND	PLANT CATEGORY	SPECIES (SCIENTIFIC NAME)	UNIT	QUANTITY	HEIGHT	STEM DIA. IN 1.2m HEIGHT	CROWN DIA.	ROOT BALL DIA.	TREE SUPORT	REMARKS
Lag-r	TREE	Lagerstroemia reginae (=Lagaerstroemia speciosa)	No.	3.00	4.0	0.04		0.45	TRIPOD WITH POLE	
Mim-e	TREE	Mimusops elengi	No.	2.00	4.0	0.04		0.45	TRIPOD WITH POLE	
Plu-a	TREE	Plumeria alba (White flower)	No.	1.00	3.0	0.04		0.40	TRIPOD WITH POLE	
Ixo-c	SHRUB	Ixora cocdna (=Ixora chinensis)	m2	11.80	0.4		0.25			SPACE WITHIN FLOWER PLANTING BOX (10No/m2)
Lan-c	SHRUB	Lantana camara	No.	19.00	0.4		0.25			
Mus-p	SHRUB	Musaenda pubescens	No.	18.00	0.4		0.25			
	GRASS SOD	Axonopus compressus (Broad leafed grass)	m2	5.88						SPACE WITHIN TREE PLANTING BOX.
	GRASS SPRIGS	Axonopus compressus (Broad leafed grass)	m2	78,92						

LANDSCAPE WORK LIST (PACKAGE B: THANH DA PUMPING STATION)

LEGEND	WORK ITEM	UNIT	QUANTITY	SIZE : DIMENSION	REMARKS
MGP	MAIN GATE POSTS (2 POSTS IN 1 SET)	No.	1.00	565 x 450 x H 2500 STEEL REINFORCED CONCRETE	
SGD-1	SLIDING GATE DOOR (TYPE-1)	No.	1.00	H 2000 x W 500 x L 4250 STEEL 50 x 50 FRAMED DOOR WITH WHEELS ON BOTTOM	RAILWAY INCLUDED
	GRID FENCE (TYPE-A) (STEEL FENCE AND COLUMN)	m	82.82	H 2200 x 3000 SPAN STEEL BAR WITH BASE TRIM H 2500 X W 335 x 220 CONC. COLUMN H 2500 X W 335 x 335 CONC. END COLUMN	REINFORCED CONC. COLUMN
CPS	CURB OF PLAZA SPACE	m	32.22	200 x 500 x L CAST IN SITU CONCRETE	
CCP	CURB OF CONCRETE PAVING	m	15.37	200 x 250 x L CAST IN SITU CONCRETE	
CPB	CURB OF PLANTING BOX	m	28.00	200 x 400 x L CAST IN SITU CONCRETE	
BPV	COLOR CONCRETE BLOCK PAVING	m2	81.70	198 x 98 x 68 THK COLORED CONCRETE BLOCK	
CPV	CONCRETE PAVING	m2	124.72	150 THK CAST IN SITU CONCRETE	
	BENCH STOOL	NO.	2.00	400 x 800 x H 400 REINFORCED CONCRETE TERRAZO FINISH ON SEATING TOP	
	PLANTING WORK				REFER TO PLANTING LIST

DETAIL A

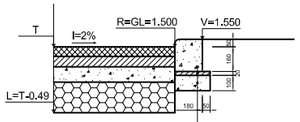

T_ Elevation of center line of road
V_ Top of curb (m)
R_ Bottom of ditchese plat (m)
L_ Bottom of subbase (=subgrate level) (m)

Curb Type 1, Concrete Type E, Cast In Situ
Cement motar M50 (t=20)
Aggregate Add Cement Motar M50 (t=100)

OUTSIDE PAVEMENT TYPE P3

DEMAND ELASTIC MODULUS Eyc = 1600Kg/cm²

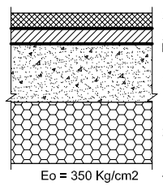

5cm wearing course, asphalt concrete (small size)
Emulsifies asphalt tack coat 0.2 ~ 0.7 l/m²
5cm binder course asphalt concrete (middle size)
Emulsifies asphalt prime coat 1.0 ~ 2.0 l/m²

19cm base course, crushed aggregate (size 2 ~ 4 cm)

20cm subbase course, aggregate 4 ~ 6cm (or red gravel grading)

Eo = 350 Kg/cm2 49 cm IS TOTAL THICKNESS OF PAVEMENT

IN SITU CONCRETE PAVING SECTION S = 1 : 30

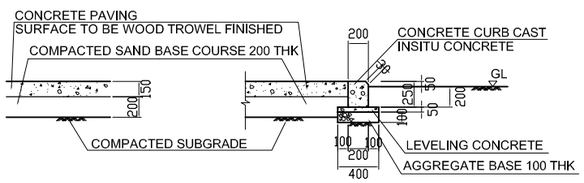

NOTE : CONCRETE CURB SHALL BE INSTALLED IN CASE OF FACING SOD AREA

S = 1 : 20

FLOWERING SHRUBS GROUP PLANTING SPECIES AND SIZES SHALL BE SPECIFIED IN THE PLANTING LIST

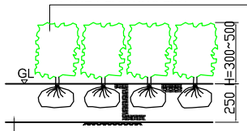

PLANTING BED, H=250 SHALL BE MADE BY REPLACEMENT OF AGRICULTURE SOIL AFTER REMOVAL OF DEPTH OF 250 EXISTING SOIL

S = 1 : 10

SPRIGS OF LIVING GRASS PLANT SPECIES SHALL BE AXONOPUS SP.

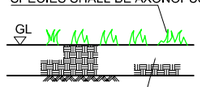

100 THK FOR REPLACEMENT BY AGRICULTURE SOIL AFTER REMOVALS OF EXISTING SOIL SURFACE

S = 1 : 20

FLOWERING SHRUB INDEPENDANT PLANTING SPECIES AND SIZES SHALL BE SPECIFIED IN THE PLANT LIST

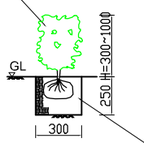

PLANTING HOLE D=300, H=250 EXCAVATED SOIL SHALL BE REPLACED BY AGRICULTURE SOIL

PLANTING WORK SECTION S = 1 : 30

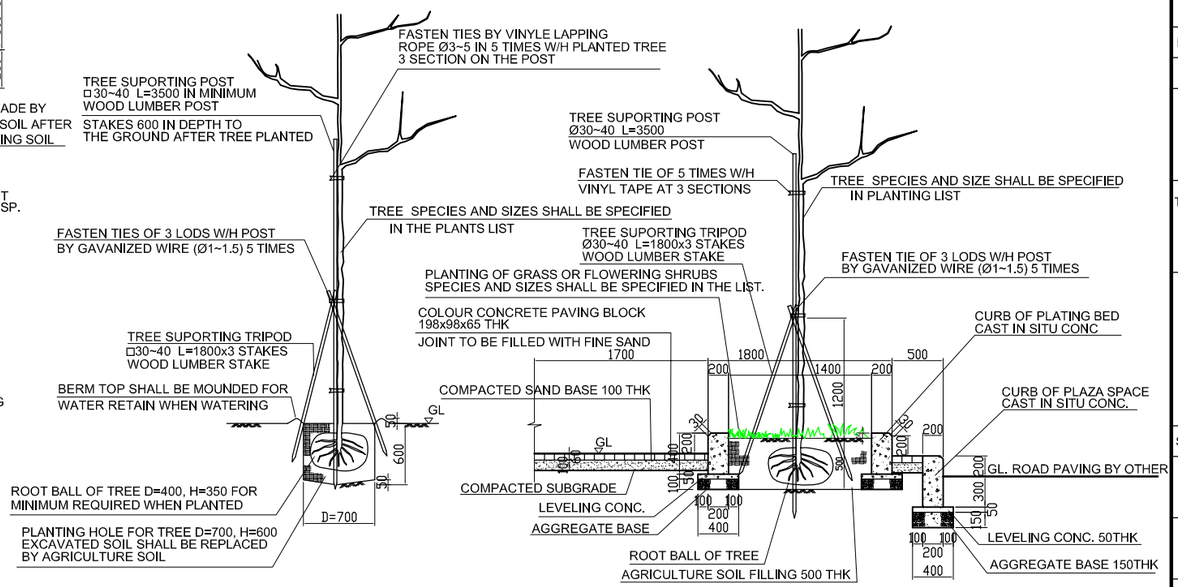

NOTE

CURB CAST IN SITU
CENTER LINE OF FENCE
BOUNDARY
AC : ASPHALT CONCRETE PAVEMENT
GL = 1.50 m : AVERAGE EXISTING GROUND LEVEL

NO.	DATE	DESCRIPTIONS	BY	APRO.

REVISIONS

PROJECT MANAGEMENT UNIT FOR HO CHI MINH CITY WATER ENVIRONMENT IMPROVEMENT

THE DETAILED DESIGN STUDY ON HO CHI MINH CITY WATER ENVIRONMENT IMPROVEMENT PROJECT IN THE SOCIALIST REPUBLIC OF VIET NAM

PACKAGE B
PUMP DRAINAGE IMPROVEMENT THANH DA PUMPING STATION

LANDSCAPE AND ROAD WORKS OF THANH DA PUMPING STATION

SCALE = 1/200, 1/30, 1/20, 1/10

JICA JAPAN INTERNATIONAL COOPERATION AGENCY (JICA)

PACIFIC CONSULTANTS INTERNATIONAL

DESIGNED | CHECKED

DATE : | DWG. No. PB - PDI - TD - 310

GATE POSTS, GATE DOORS AND FENCES S = 1/50

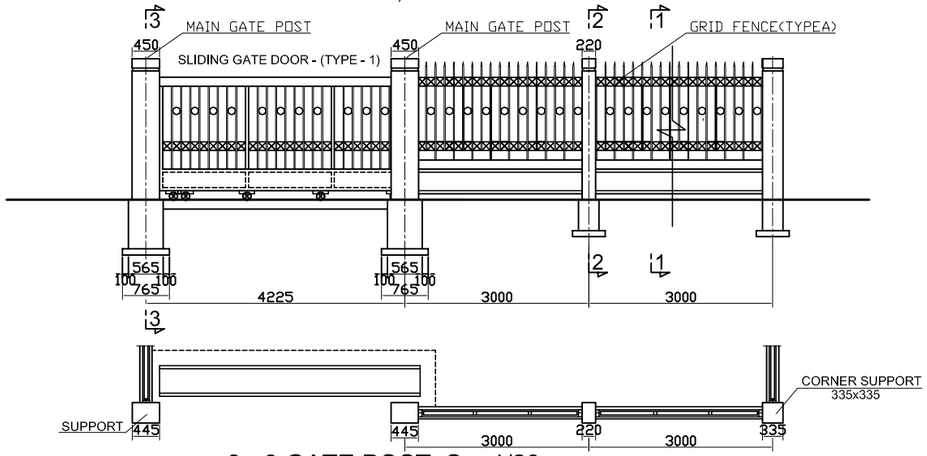

1 - 1 S = 1/20

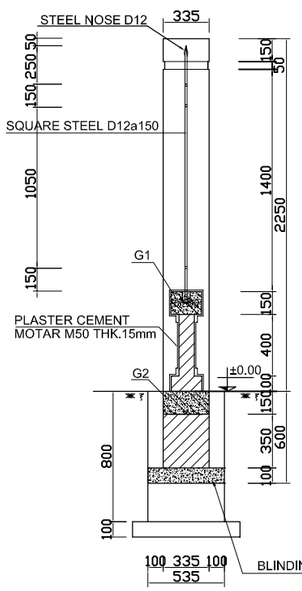

2 - 2 S = 1/20

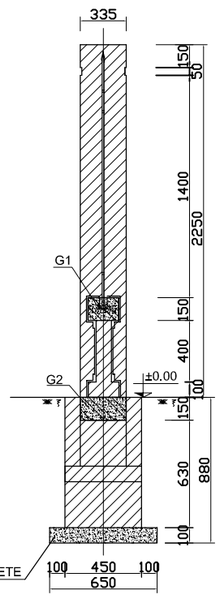

3 - 3 GATE POST S = 1/20

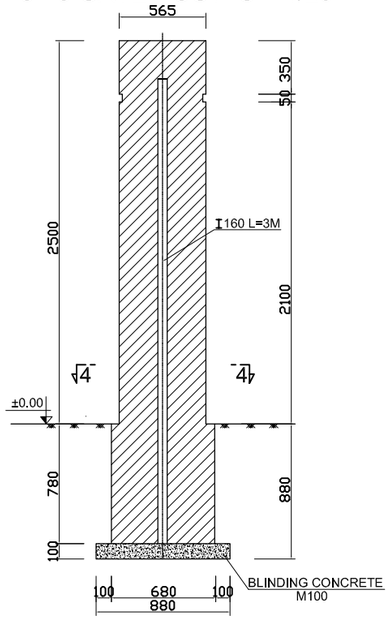

BEAM G2 S = 1/10

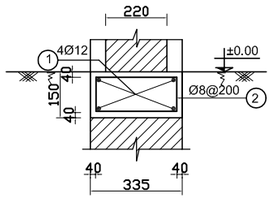

BEAM G1

SCALE = 1/10

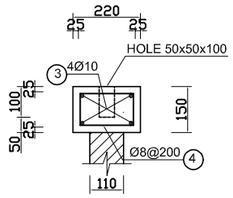

4 - 4 S = 1/20

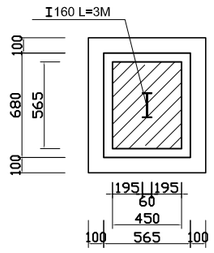

SLIDING GATE DOOR (TYPE - 1) FRONT ELEVATION S = 1/25

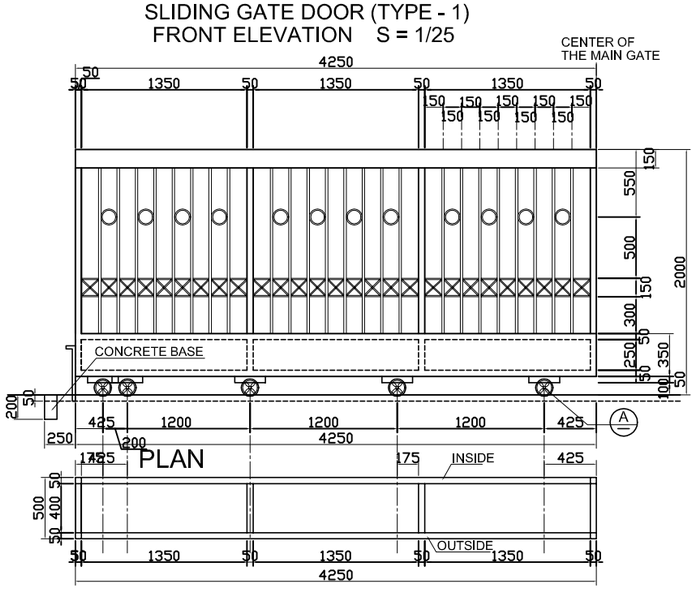

SIDE ELEVATION

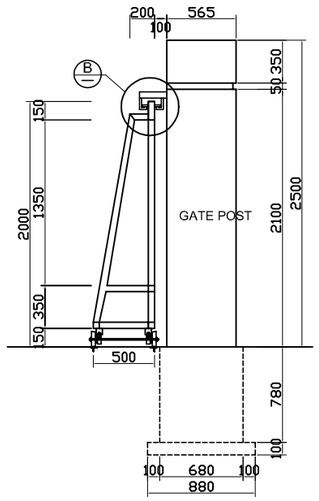

DETAILS OF WHEEL

S = 1/10

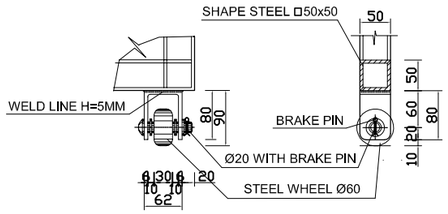

DETAIL B

S = 1/10

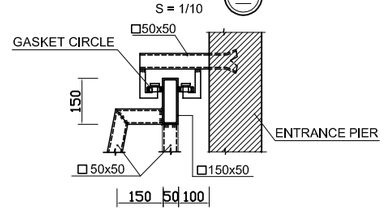

DETAIL A

S = 1/10

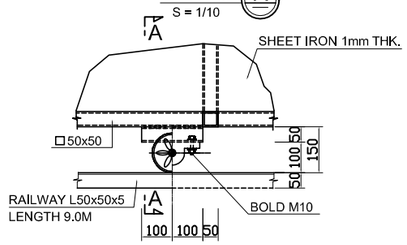

A - A

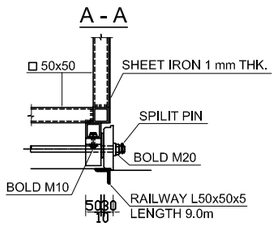

NO.	DATE	DESCRIPTIONS	BY	APRO.

REVISIONS

PROJECT MANAGEMENT UNIT FOR
HO CHI MINH CITY
WATER ENVIRONMENT IMPROVEMENT

THE DETAILED DESIGN STUDY ON HO CHI MINH CITY
WATER ENVIRONMENT IMPROVEMENT PROJECT
IN THE SOCIALIST REPUBLIC OF VIET NAM

PACKAGE B
PUMP DRAINAGE IMPROVEMENT
THANH DA PUMPING STATION

DETAILS OF GATE, GATE POST
AND FENCE (TYPE A)

SCALE : AS SHOWN

JICA JAPAN INTERNATIONAL COOPERATION AGENCY (JICA)

PACIFIC CONSULTANTS INTERNATIONAL

DESIGNED | CHECKED

DATE : | DWG. No. PB - PDI - TD - 311

PLAN

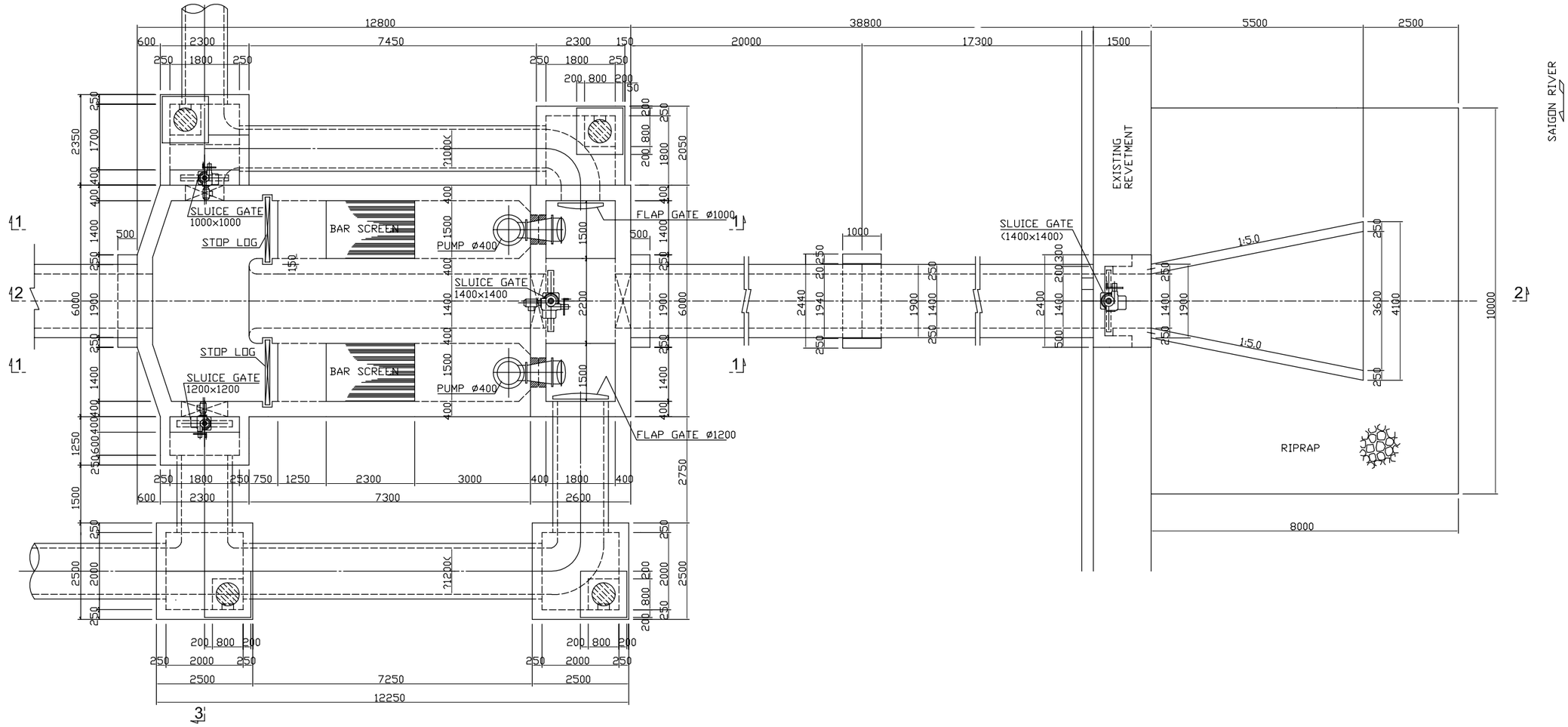

1 - 1

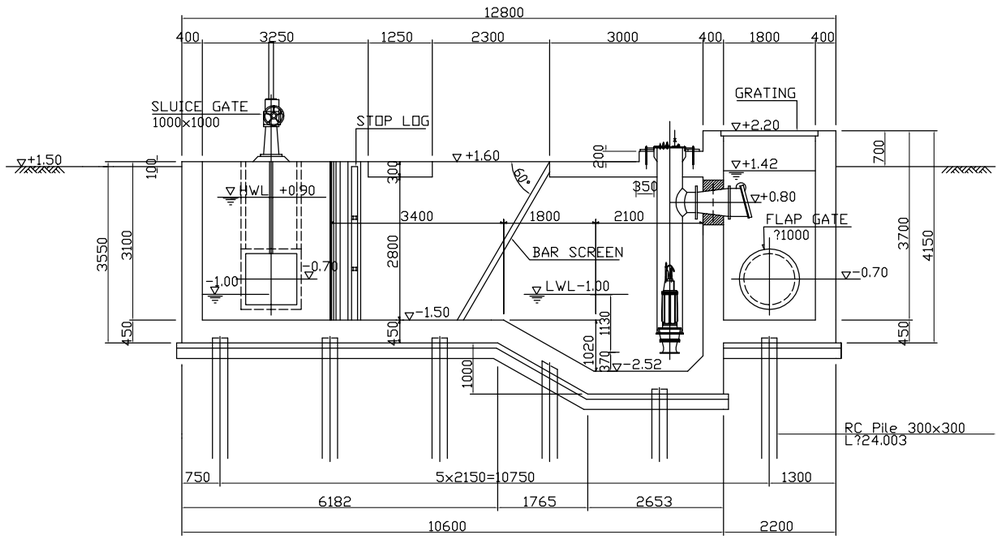

NO.	DATE	DESCRIPTIONS	BY	APRO.

REVISIONS

PROJECT MANAGEMENT UNIT FOR
WATER ENVIRONMENT IMPROVEMENT FOR
HO CHI MINH CITY

THE DETAILD DESIGN ON HO CHI MINH CITY
WATER ENVIRONMENT IMPROVEMENT PROJECT
IN THE SOCIALIST REPUBLIC OF VIET NAM

PACKAGE B
PUMP DRAINAGE IMPROVEMENT
THANH DA PUMPING STATION

LAYOUT OF PUMP, BAR SCREEN
AND GATE EQUIPMENT

SCALE : 1 / 60

JAPAN INTERNATIONAL COOPERATION AGENCY (JICA)

PACIFIC CONSULTANTS INTERNATIONAL

DESIGNED | CHECKED

DATE : | DWG. No. PB - PDI - TD - 401

2 - 2

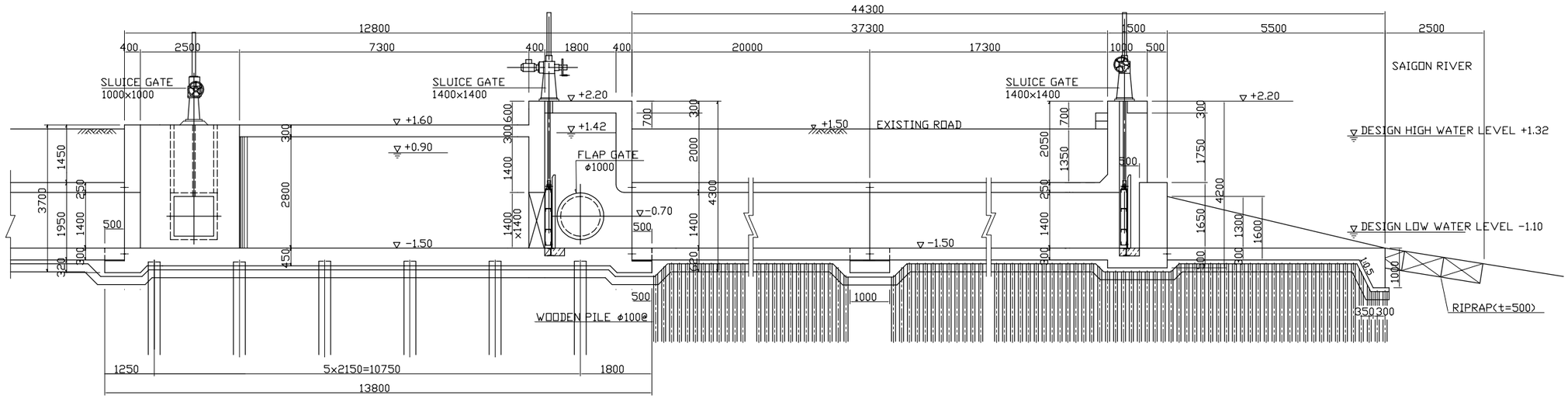

3 - 3

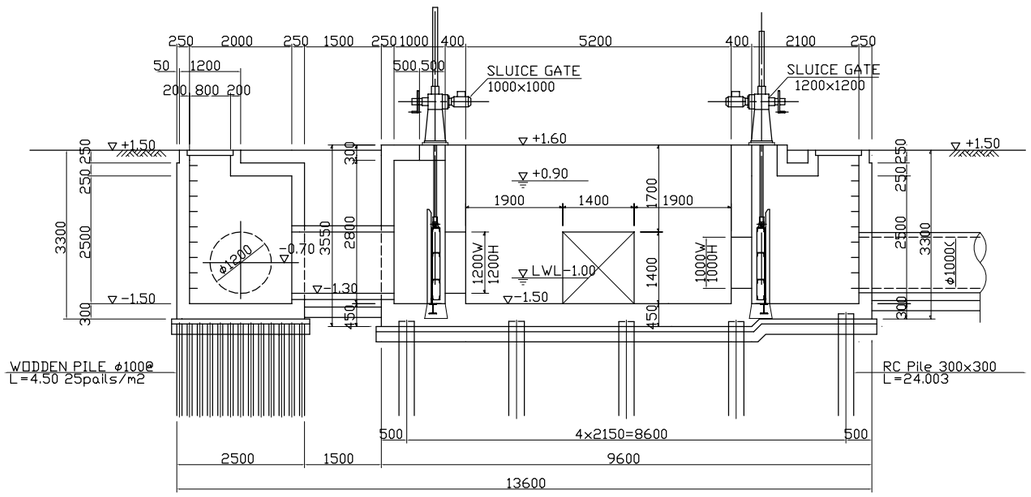

NO.	DATE	DESCRIPTIONS	BY	APRO.

REVISIONS

PROJECT MANAGEMENT UNIT FOR
WATER ENVIRONMENT IMPROVEMENT FOR
HO CHI MINH CITY

THE DETAILD DESIGN ON HO CHI MINH CITY
WATER ENVIRONMENT IMPROVEMENT PROJECT
IN THE SOCIALIST REPUBLIC OF VIET NAM

PACKAGE B
PUMP DRAINAGE IMPROVEMENT
THANH DA PUMPING STATION

LAYOUT OF GATE EQUIPMENT

SCALE : 1 / 60

JAPAN INTERNATIONAL COOPERATION AGENCY (JICA)

PACIFIC CONSULTANTS INTERNATIONAL

DESIGNED | CHECKED

DATE : | DWG. No. PB - PDI - TD - 402

PLAN SCALE : 1/60

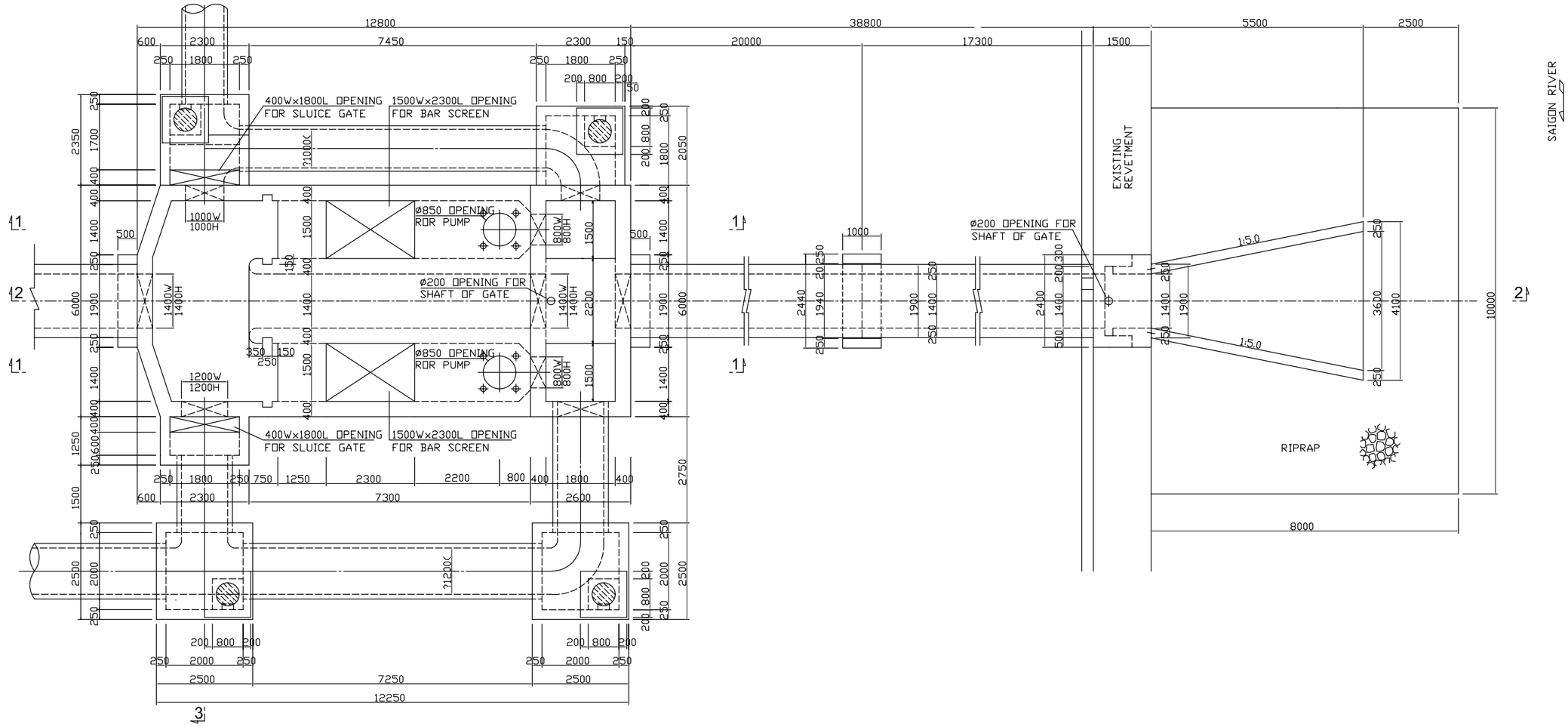

1 - 1 SCALE : 1/60

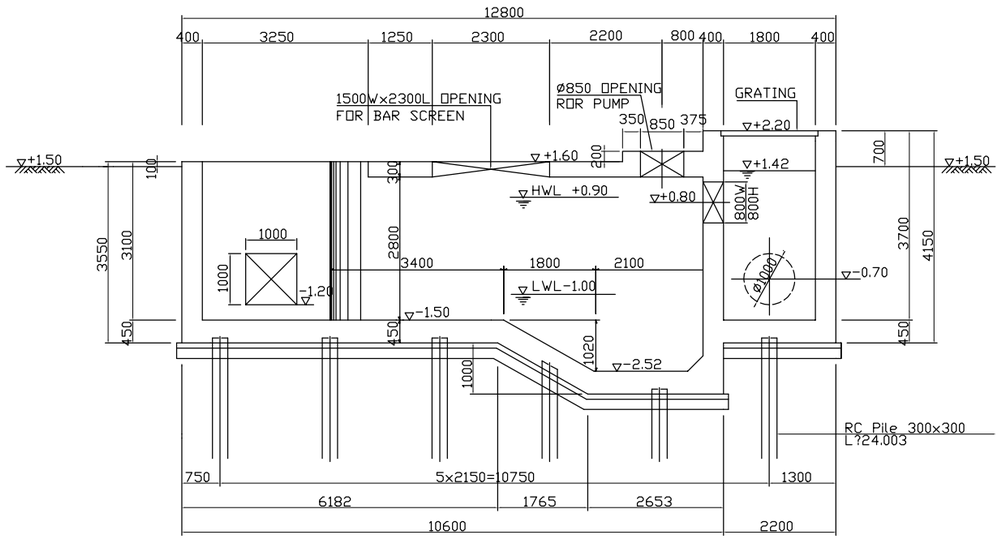

TYPICAL FOUNDATION OF COLUMN PIPE SCALE : 1/20

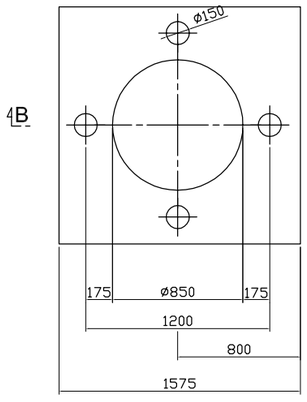

B - B

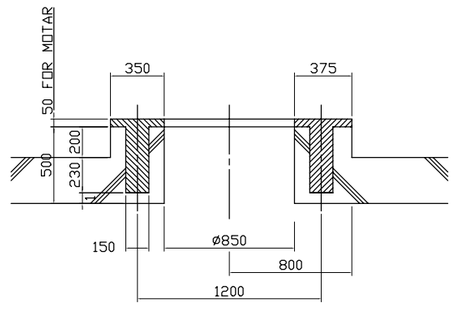

NO.	DATE	DESCRIPTIONS	BY	APRO.

REVISIONS

PROJECT MANAGEMENT UNIT FOR WATER ENVIRONMENT IMPROVEMENT FOR HO CHI MINH CITY

THE DETAILD DESIGN ON HO CHI MINH CITY WATER ENVIRONMENT IMPROVEMENT PROJECT IN THE SOCIALIST REPUBLIC OF VIET NAM

PACKAGE B
PUMP DRAINAGE IMPROVRMENT
THANH DA PUMPING STATION

FOUNDATION, BLOCKOUT AND OPENING FOR INSTALLATION OF MECHANICAL EQUIPMENT (1)

SCALE : 1/60, 1/20

JICA JAPAN INTERNATIONAL COOPERATION AGENCY (JICA)

PACIFIC CONSULTANTS INTERNATIONAL

DESIGNED | CHECKED

DATE : | DWG. No. PB - PDI - TD - 403

2 - 2

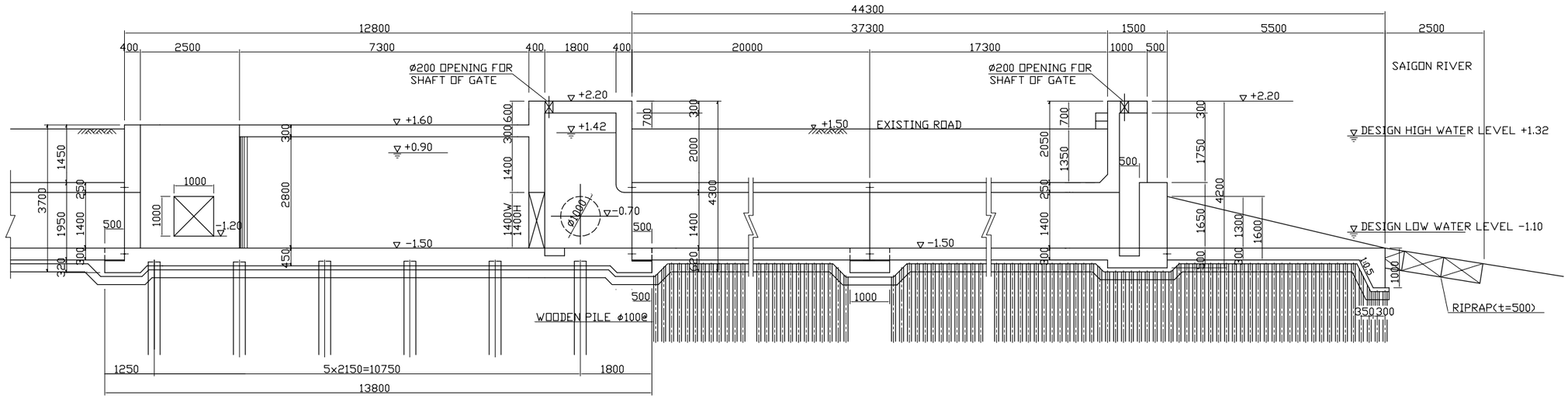

3 - 3

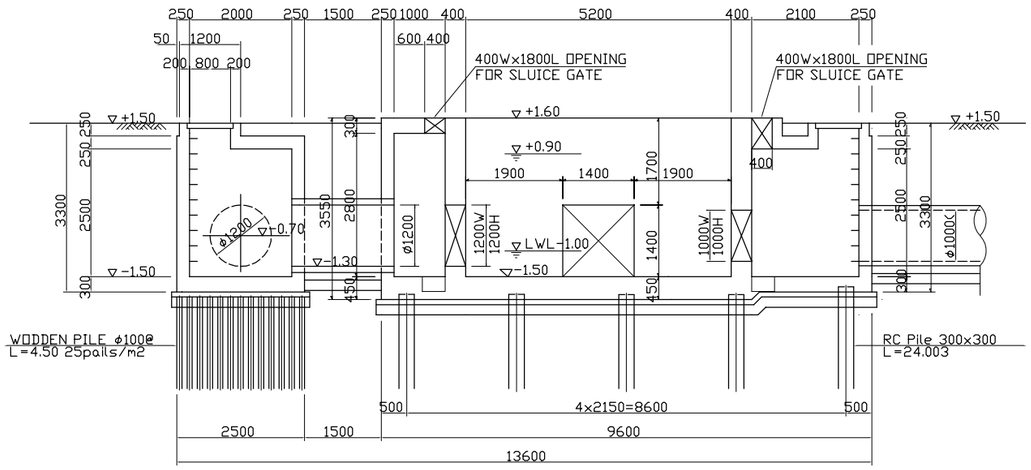

NO.	DATE	DESCRIPTIONS	BY	APRO.

REVISIONS

PROJECT MANAGEMENT UNIT FOR WATER ENVIRONMENT IMPROVEMENT FOR HO CHI MINH CITY

THE DETAILD DESIGN ON HO CHI MINH CITY WATER ENVIRONMENT IMPROVEMENT PROJECT IN THE SOCIALIST REPUBLIC OF VIET NAM

PAKAGE B
PUMP DRAINAGE IMPROVEMENT
THANH DA PUMPING STATION

FOUNDATION, BLOCKOUT AND OPENING FOR INSTALLATION OF MECHANICAL EQUIPMENT (2)

SCALE : 1 / 60

JICA JAPAN INTERNATIONAL COOPERATION AGENCY (JICA)

PACIFIC CONSULTANTS INTERNATIONAL

DESIGNED | CHECKED

DATE : | DWG. No. PB - PDI - TD - 404

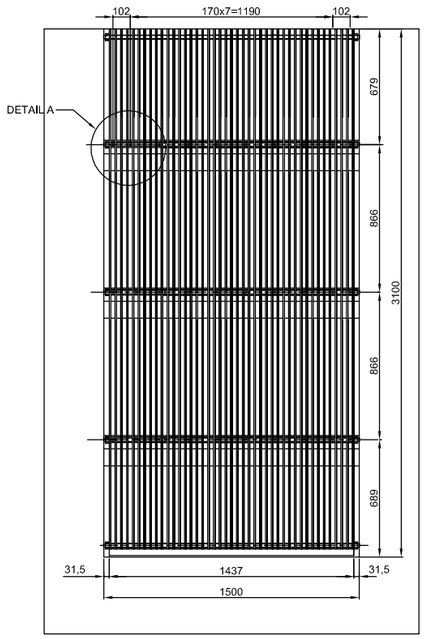

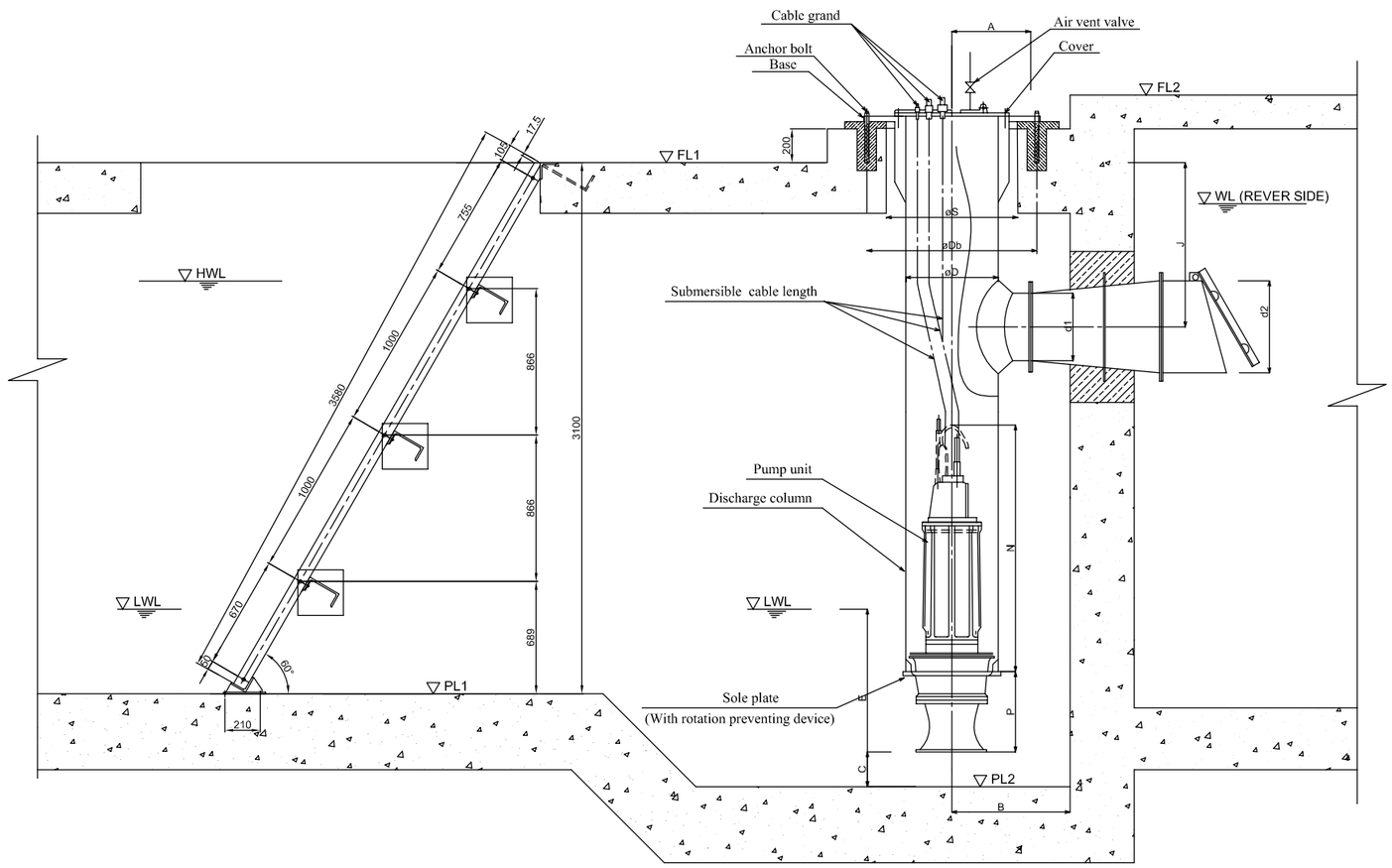

TYPICAL OUTLINE PUMP AND BAR SCREEN

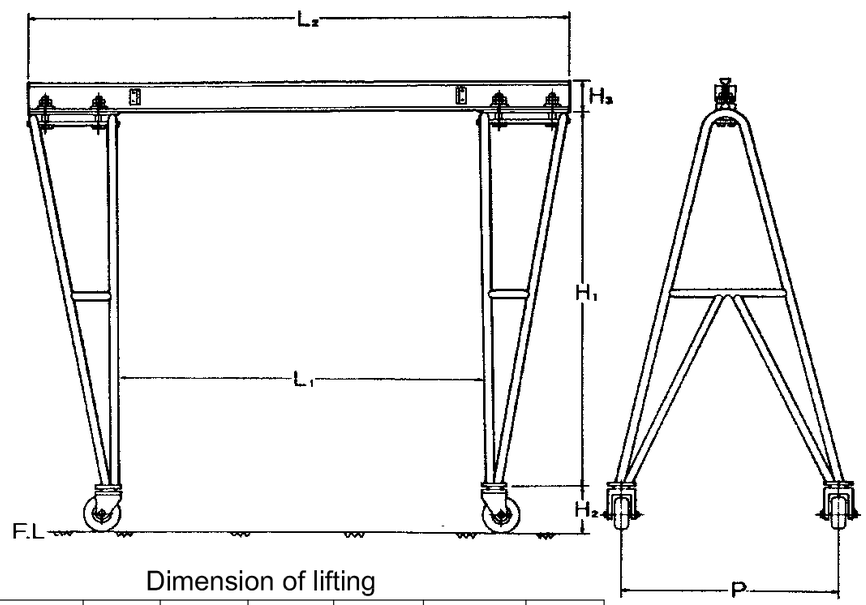

Dimension of lifting

Hoist(ton)	P(m)	L1(m)	L2(m)	H1(m)	H2(m)	H3(m)
01	1.50	3.50	4.20	2.50	0.275	0.20

Pump Lifting Divice

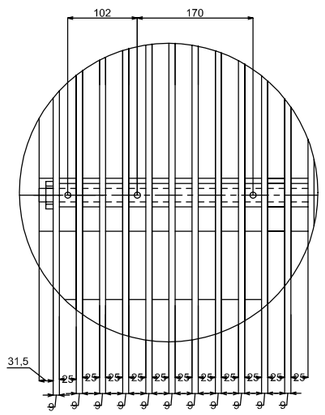

DETAIL A

PS	Dia(mm)	Suction		Discharge	PL1(m)	PL2(m)	FL(m)	A(m)	B(m)	C(m)
		HWL(m)	LWL(m)	WL(m)						
Thanh Da	400	0.9	-1.0	1.32	-1.50	-2.52	1.6	0.55	0.80	0.37

PS	Dia(mm)	D(m)	E(m)	J(m)	N(m)	P(m)	S(m)	Db(m)	d1(m)	d2(m)
Thanh Da	400	0.6	0.85	0.8	1.6	0.345	0.85	1.2	0.4	0.6

NO.	DATE	DESCRIPTIONS	BY	APRO.

REVISIONS

PROJECT MANAGEMENT UNIT FOR
HO CHI MINH CITY
WATER ENVIRONMENT IMPROVEMENT

THE DETAILED DESIGN STUDY ON HO CHI MINH CITY
WATER ENVIRONMENT IMPROVEMENT PROJECT
IN THE SOCIALIST REPUBLIC OF VIET NAM

PACKAGE B
PUMP DRAINAGE IMPROVEMENT
THANH DA PUMPING STATION

DETAILS OF BAR SCREEN,
LIFTING DIVICE AND PUMP EQUIPMENT

SCALE :

JAPAN INTERNATIONAL COOPERATION AGENCY (JICA)

PACIFIC CONSULTANTS INTERNATIONAL

DESIGNED | CHECKED

DATE :

DWG. No. PB - PDI - TD - 405

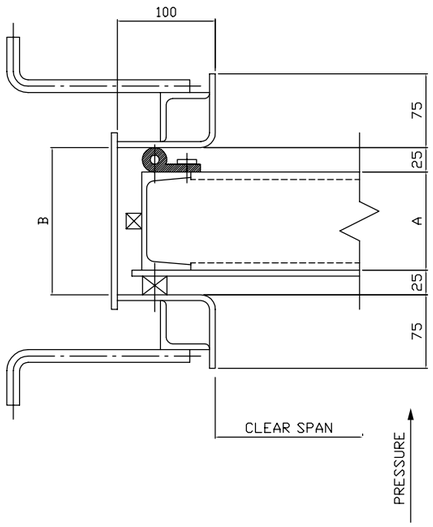

DETAIL OF SIDE

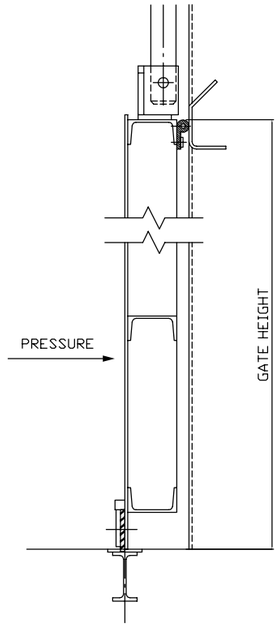

DETAIL OF UPPER & LOWER

DIMENSION OF SLUICE GATE

SPECIFICATION	INLET GATE	INLET GATE	BY-PASS GATE	OUTLET GATE
TYPE	STEEL, SLUICE GATE	STEEL, SLUICE GATE	STEEL, SLUICE GATE	STEEL, SLUICE GATE
CLEAR SPAN x HEIGHT	1200mmW x 1200mmH	1000mmW x 1000mmH	1400mmW x 1400mmH	1400mmW x 1400mmH
Q'TY	1	1	1	1
DESIGN DEPTH	2.2m	2.1m	2.82m	2.82m
WATERTIGHT	4-SIDE, RUBBER SEALED	4-SIDE, RUBBER SEALED	4-SIDE, RUBBER SEALED	4-SIDE, RUBBER SEALED
PRINCIPAL MATERIAL	GATE - JIS SS400	GATE - JIS SS400	GATE - JIS SS400	GATE - JIS SS400
OPERATION	ELECTRICAL	ELECTRICAL	ELECTRICAL	MANUAL
LEVEL DWL (A)	+0.90	+0.90	+1.32	+1.32
DWL (B)	-1.10	-1.10	-1.00	-1.00
FL (D)	+1.60	+1.60	+2.20	+2.20
FL (E)	-1.30	-1.20	-1.50	-1.50
DIMENSION (A)	100mm	100mm	125mm	125mm
(B)	150mm	150mm	175mm	175mm

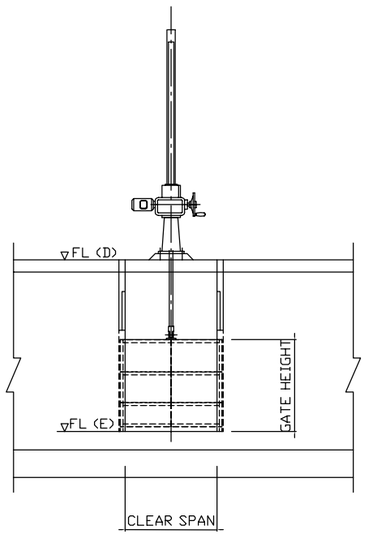

FRONT VIEW

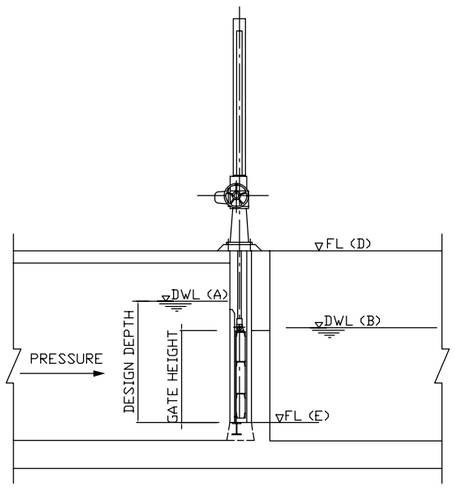

SECTION VIEW
INLET GATE

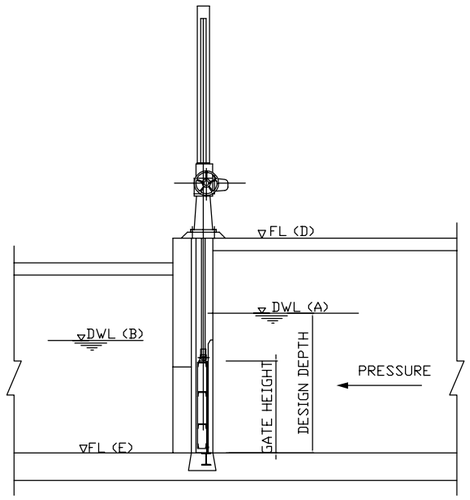

SECTION VIEW
BY-PASS GATE

NO.	DATE	DESCRIPTIONS	BY	APRO.

REVISIONS

PROJECT MANAGEMENT UNIT FOR
HO CHI MINH CITY
WATER ENVIRONMENT IMPROVEMENT

THE DETAILED DESIGN STUDY ON HO CHI MINH CITY
WATER ENVIRONMENT IMPROVEMENT PROJECT
IN THE SOCIALIST REPUBLIC OF VIET NAM

PACKAGE B
PUMP DRAINAGE IMPROVEMENT
THANH DA PUMPING STATION

DETAILS OF SLUICE GATE

SCALE : AS SHOWN

JAPAN INTERNATIONAL COOPERATION AGENCY (JICA)

PACIFIC CONSULTANTS INTERNATIONAL

DESIGNED | CHECKED

DATE : | DWG. No. PB - PDI - TD - 406

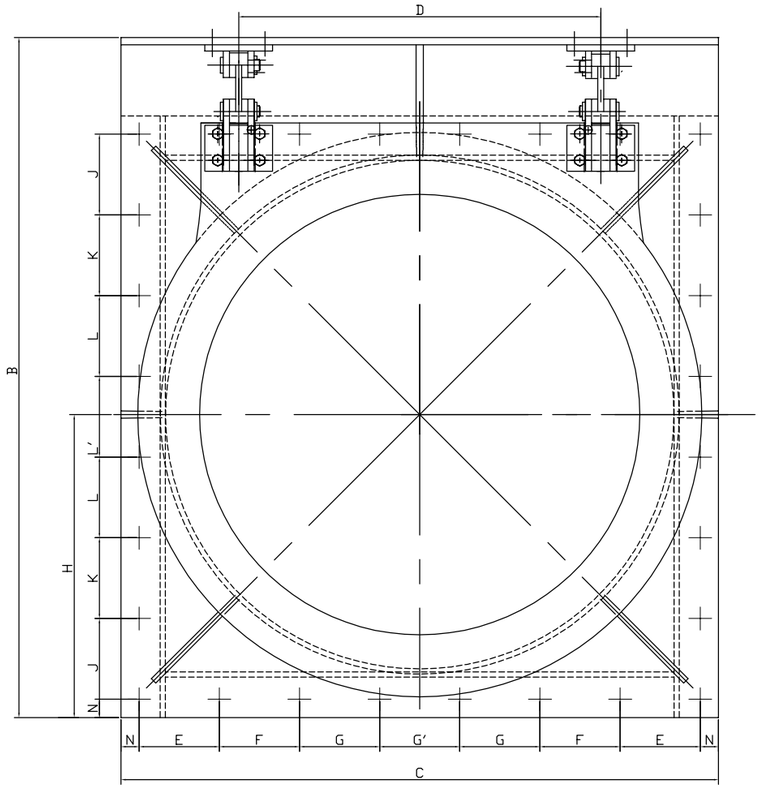

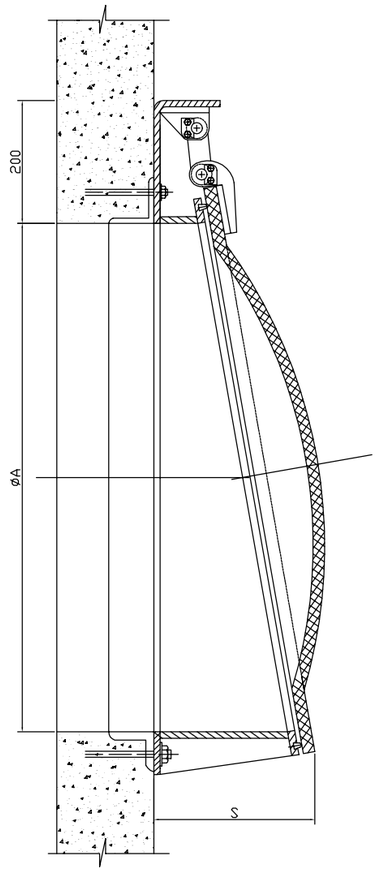

A	B	C	D	E	F	G	G'	H	J	K	L	L'	N	P	Q	S
1000	1275	1150	700	220	220	-	220	600	220	220	-	220	25	20	13	228
1200	1485	1350	800	260	260	-	260	675	260	260	-	260	25	20	20	255

SPECIFICATION	THANH DA PUMPING STATION
TYPE	COMPOSITE, FABRICATED, ROUND SHAPE SWING TYPE GATE
DIAMETRE	1000mm/1200mm
Q'TY	1/1
DESIGN DEPTH (H)	2.32m
GATE CENTRE LEVEL	-0.70m

NO.	DATE	DESCRIPTIONS	BY	APRO.

REVISIONS

PROJECT MANAGEMENT UNIT FOR
HO CHI MINH CITY
WATER ENVIRONMENT IMPROVEMENT

THE DETAILED DESIGN STUDY ON HO CHI MINH CITY WATER ENVIRONMENT IMPROVEMENT PROJECT IN THE SOCIALIST REPUBLIC OF VIET NAM

PACKAGE B
PUMP DRAINAGE IMPROVEMENT
THANH DA PUMPING STATION

DETAIL OF FLAP GATE

SCALE : AS SHOWN

JAPAN INTERNATIONAL COOPERATION AGENCY (JICA)

PACIFIC CONSULTANTS INTERNATIONAL

DESIGNED | CHECKED

DATE : | DWG. No. PB - PDI - TD - 407

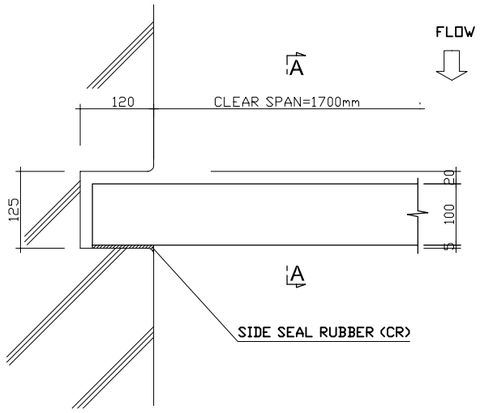

PLAN

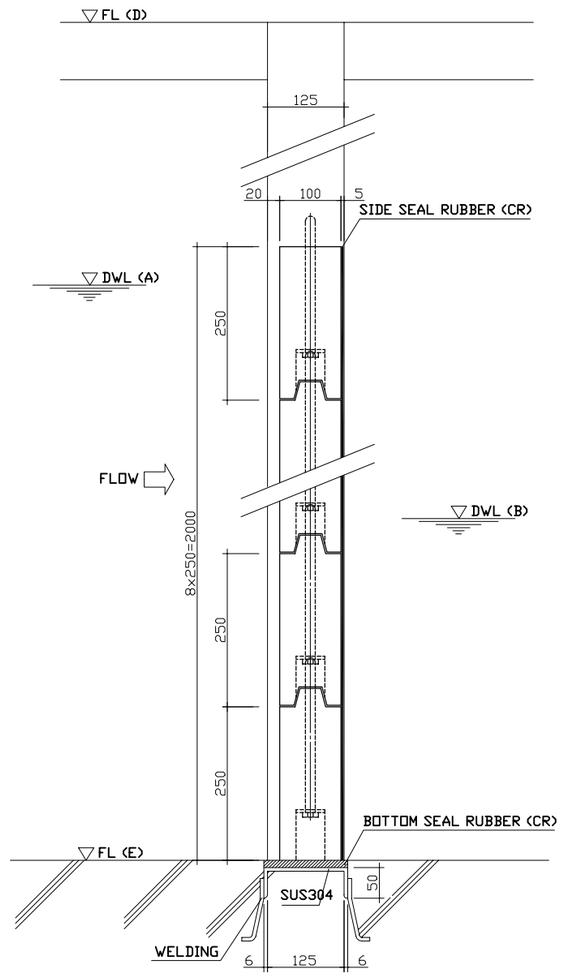

A - A

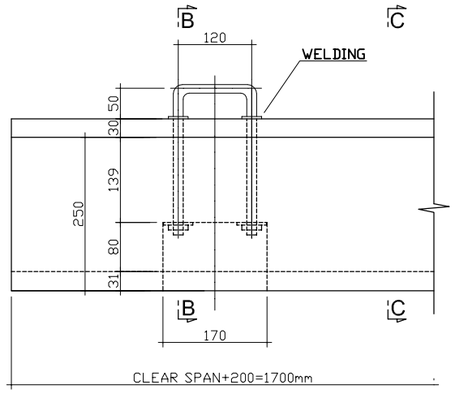

DETAIL HANDLE

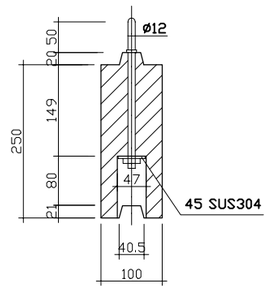

B - B

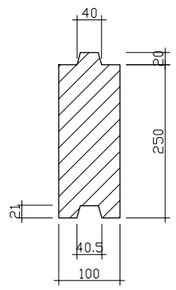

C - C

SPECIFICATION	INLET STOP LOG
TYPE	WOODEN, FABRICATE
CLEAR SPAN x HEIGHT	1500mmW x 3100mmH
Q'TY - GUIDE FRAME	2sets
- GATE LEAF	1set (8 pcs/set)
DESIGN DEPTH (H)	2.00m
WATERTIGHT	3-SIDE, RUBBER SEALED
PRINCIPAL MATERIAL	GATE - WOODEN
OPERATION	BY HAND
LEVEL	
DWL (A)	+0.90
DWL (B)	-1.00
FL (D)	+1.60
FL (E)	-1.50

NO.	DATE	DESCRIPTIONS	BY	APRO.

REVISIONS

PROJECT MANAGEMENT UNIT FOR
HO CHI MINH CITY
WATER ENVIRONMENT IMPROVEMENT

THE DETAILDED DESIGN ON HO CHI MINH CITY
WATER ENVIRONMENT IMPROVEMENT PROJECT
IN THE SOCIALIST REPUBLIC OF VIET NAM

PACKAGE B
PUMP DRAINAGE IMPROVEMENT
THANH DA PUMPING STATION

DETAILS OF STOP LOG

SCALE : 1 / 5

JICA JAPAN INTERNATIONAL COOPERATION AGENCY (JICA)

PACIFIC CONSULTANTS INTERNATIONAL

DESIGNED | CHECKED

DATE : | DWG. No. PB - PDI - TD - 408

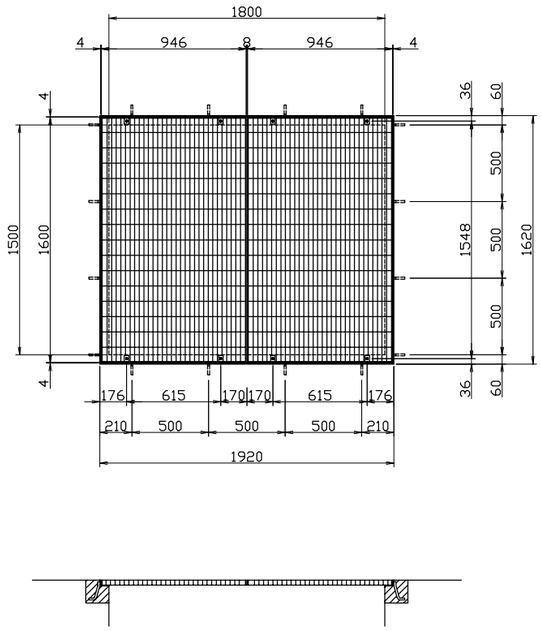

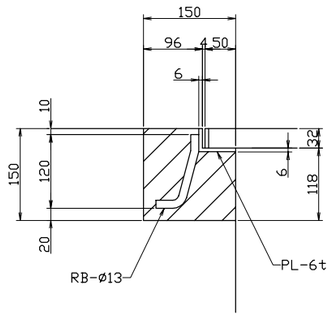

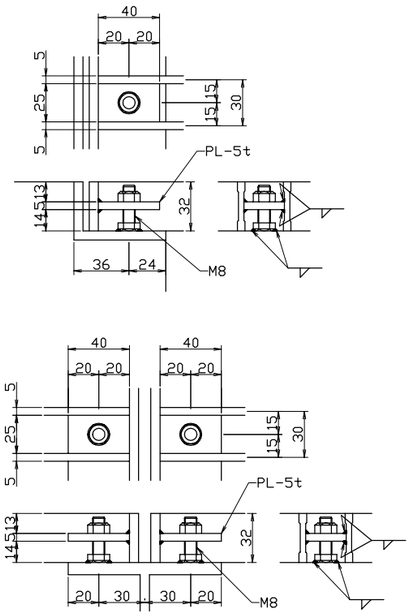

WEIGHT PER PIECE : 68kg
QUANTITY OF GRATING : 2
TOTAL WEIGHT : 136kg

NO.	DATE	DESCRIPTIONS	BY	APRO.

REVISIONS

PROJECT MANAGEMENT UNIT FOR
HO CHI MINH CITY
WATER ENVIRONMENT IMPROVEMENT

THE DETAILED DESIGN STUDY ON HO CHI MINH CITY
WATER ENVIRONMENT IMPROVEMENT PROJECT
IN THE SOCIALIST REPUBLIC OF VIET NAM

PACKAGE B
PUMP DRAINAGE IMPROVEMENT
THANH DA PUMPING STATION

DETAILS OF OPENING COVER FOR
DISCHARGE BASIN

SCALE : 1 / 20

JICA JAPAN INTERNATIONAL COOPERATION AGENCY (JICA)

PACIFIC CONSULTANTS INTERNATIONAL

DESIGNED | CHECKED

DATE : | DWG. No. PB - PDI - TD - 409