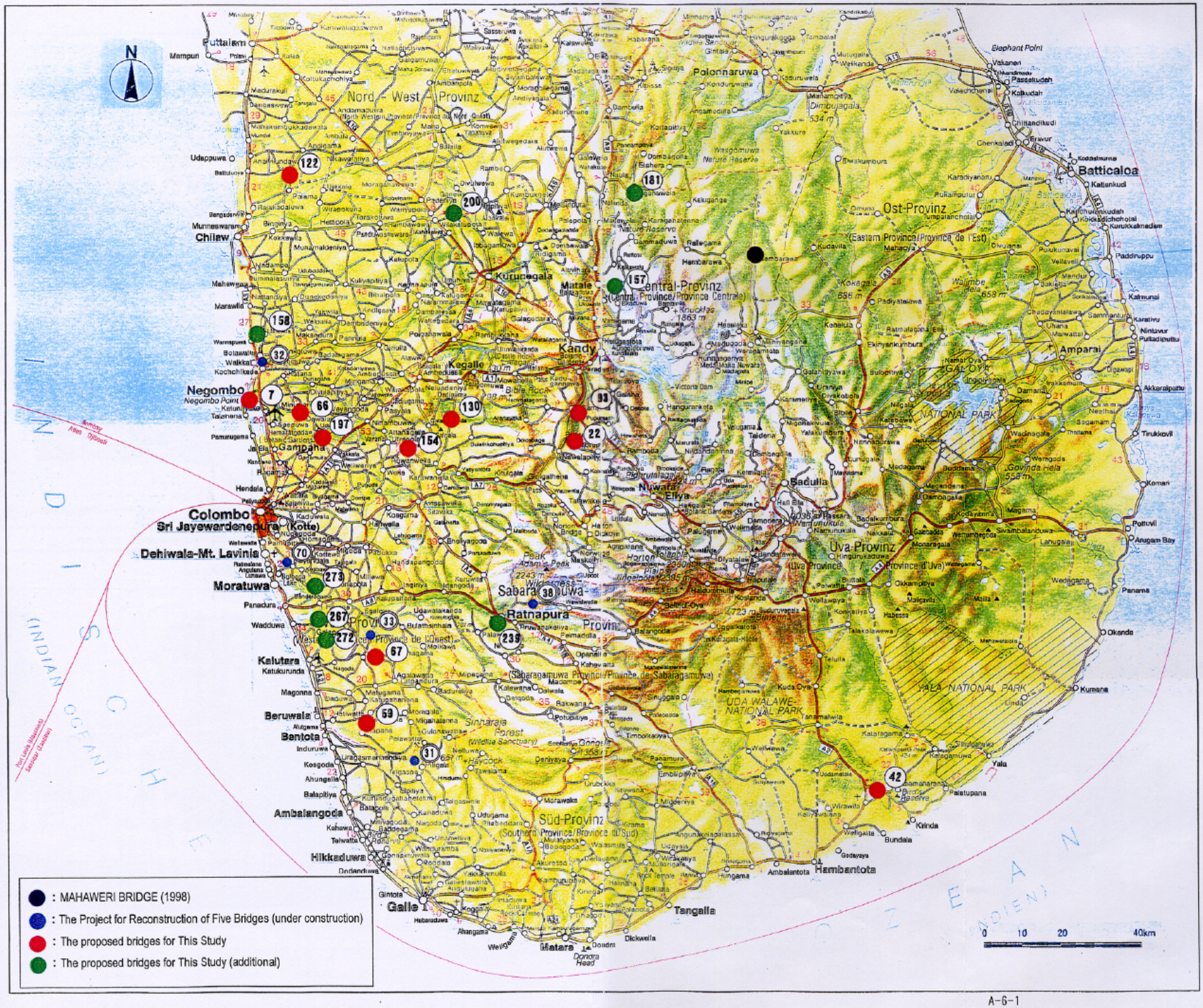
N
Puttalam
Mampuri
Nord - West - Provinz
Udappuwa
Chilaw
Negombo
Negombo Point
Gampaha
Colombo
Sri Jayewardenepura (Kotte)
Dehiwala-Mt. Lavinia
Moratuwa
Panadura
Kalutara
Beruwala
Bentota
Ambalangoda
Hikkaduwa
Galle
Matara
Dondra Head
Tangalla
Hambantota
Ambalantota
Kurunegala
Matale
Kandy
Kegalle
Nuwara Eliya
Badulla
Polonnaruwa
Batticaloa
Ost-Provinz
(Eastern Province/Province de l'Est)
Zentral-Provinz
(Central Province/Province Centrale)
Uva-Provinz
(Uva Province/Province d'Uva)
Sabaragamuwa-Provinz
(Sabaragamuwa Province/Province de Sabaragamuwa)
Ratnapura
Süd-Provinz
(Southern Province/Province du Sud)
Elephant Point
Passekudah
Kalkudah
Trincomalee
Amparai
Kalmunai
Akkaraipattu
Tirukkovil
Komari
Pottuvil
Arugam Bay
Okanda
Kumana
Yala
Palatupana
Kirinda
Bundala
Galoya
GALOYA NATIONAL PARK
YALA NATIONAL PARK
UDA WALAWE NATIONAL PARK
Sinharaja Forest (Wildlife Sanctuary)
Horton Plains
Adam's Peak
Knuckles 1863 m
Kokagala 656 m
Walimbe dela 658 m
Govinda Hela 558 m
Dimbulagala 534 m
Wasgomuwa Nature Reserve
Kaudulla Nature Reserve
Minneriya Nature Reserve
Bibile Rock
Victoria Dam
Mahaweli
Kelani
Kalu
Nilwala
Bombay
Aden
Djibouti
Port Louis (Mauritius)
Saint-Denis (Réunion)
DISCHE
(INDIAN OCEAN)
OCEAN
(INDIEN)
122
200
181
157
158
32
7
66
197
130
154
93
22
70
273
38
267
33
272
239
67
59
31
42
0 10 20 40km
: MAHAWERI BRIDGE (1998)
: The Project for Reconstruction of Five Bridges (under construction)
: The proposed bridges for This Study
: The proposed bridges for This Study (additional)

NO. 42 existing bridge condition

Location		Road No.	Name of road	Km Post
Region	Province			
Southern	Hambantota	B464	Weerawila-Tissa-Kataragama	5/1

Outline of route

This road branches from the A-class National Highway 2 (A2) at Weerawila and connects to Kataragama.
On the north side of this road, another route connects to A2. It causes a few kilometers of detour when going to Hambantota. Along this route, there are famous temples, such as Tissamahara, Kataragama, etc. The Perahera festival is held in Kataragama in July, every year, gathering large crowds of people from all over Sri Lanka.
As a principal industry around this site, salt fields around Hambantota are famous. As many cows are raised here, yoguhrt called cord is produced. Recently, irrigation has enabled rice growing.
There are only two bridges including the one to be surveyed between Hambantota and Tissamahara. A marsh spreads mostly on both sides of the road.
This is one of two bridges. It crosses over the Kirinda Oya River.

Route Map

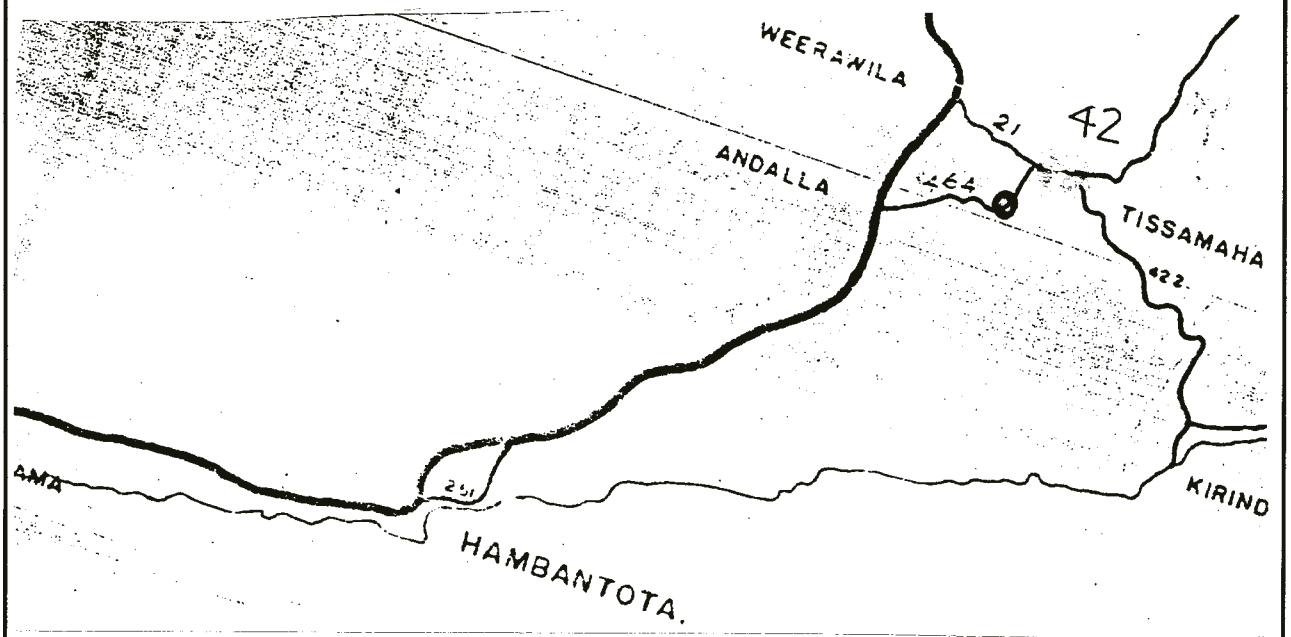

Map of condition around the bridge

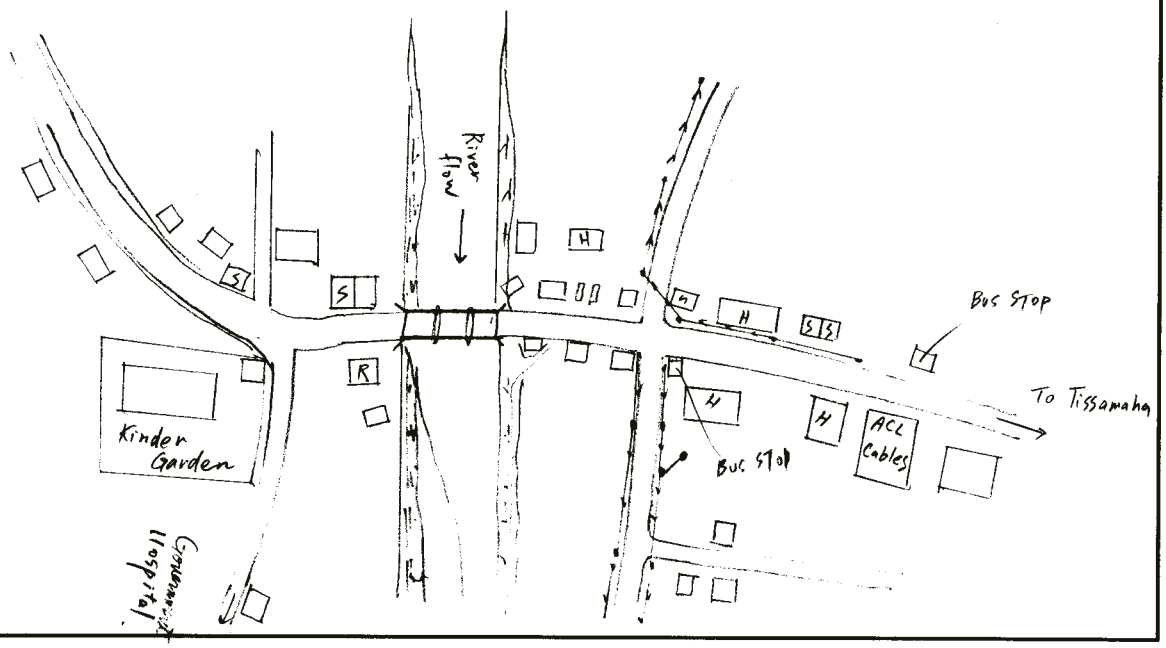

Serial No.42

The general view (longitudinal direction to the bridge axis)

The side view (perpendicular direction to the bridge axis)

Bridge structural data

Structure type :	<Superstructure>	3-continuous simple steel truss girder bridge
	<Abutment>	Stone masonry abutment
	<Pier>	Stone masonry piers
Bridge length :	59.20m	Span split : 3@19.73m
Width composition :	Effective width	4.29m
Alignment	Straight bridge	
Year of construction :	Not known (Local residents said that an Englishman constructed the bridge.))	

Damage condition

Superstructure :	Steel trus girders were repainted and no heavy corrosion could not be detected. Damage observed in a part of deck slabs.
Substructure :	Aging of stones in progress
Accessories :	Mud filling expansion joints. Heavy wear of guard rails.
Others :	Excessive irregularity in pavement due to damaged deck slab Insufficient road width

Traffic volume

	( ): Pedestrians
1990	1,140 vehicles/day
2000	3,374 vehicl (288)

Natural conditions

Topographic features :	Relatively gentle
Geological features :	Visibility of rock mass in the riverbed indicates that the bearing stratum exists in the relatively narrow position.
River :	There is an upstream dam, which prevents excessive rise of water level even during the wet season.

Surrounding environment

There are 17000 households (60,000 people) around this bridge (from Weelawila to Tissa) .
There are only two primary schools. Secondar school students must go to Hambantota or Tissa. There is a kindergarten in front of this bridge (on the Hambantota side).
There is no hospital in the neighborhood. It is necessary to go to Hambantota or Tissa.

Others

Utilities to be transf	Water pipes are installed in an elevated position.
Bypass :	Bypass at a point about 5km distanced toward the upstream side

Precipitation (Unit;mm)

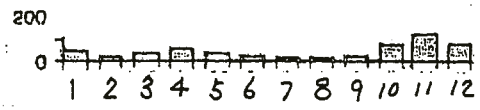

Annual rainfall	500	mm
Monthly maximum rainfall	200	mm
Month with the maximum rainf	October	

Current site condition

Shown in following page

NO.42

Plan

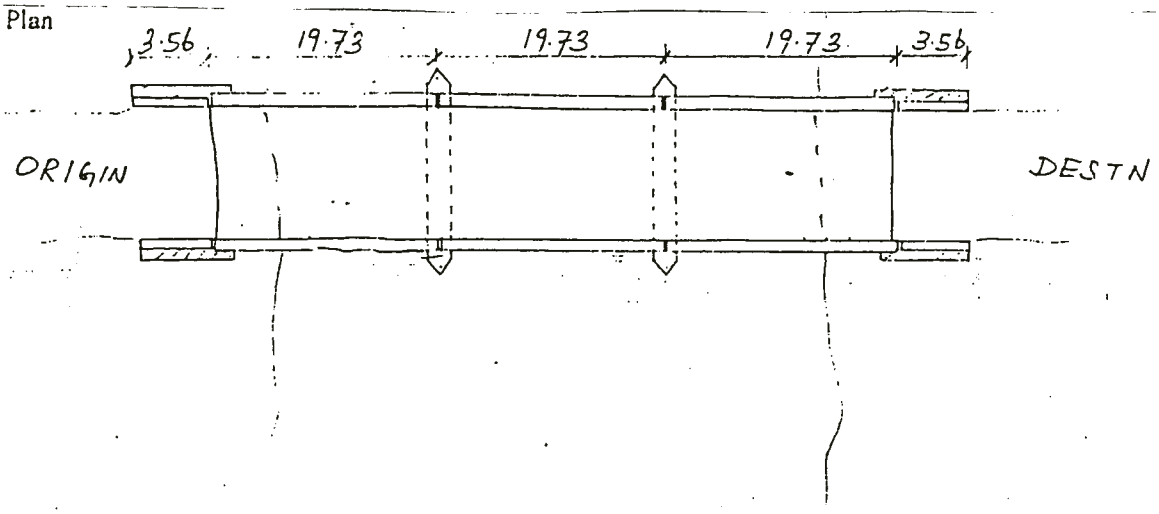

Elevation

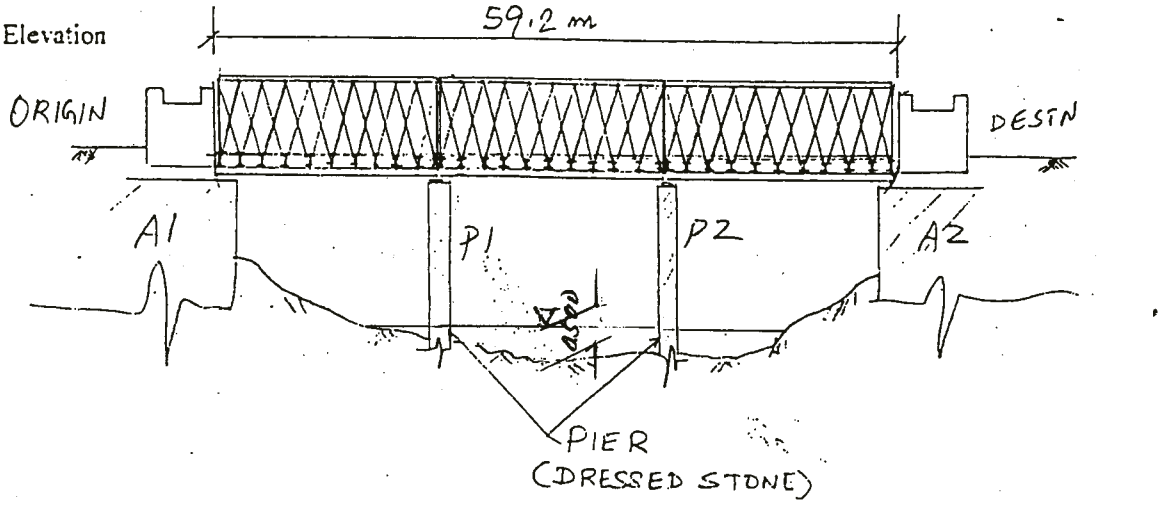

Cross Section

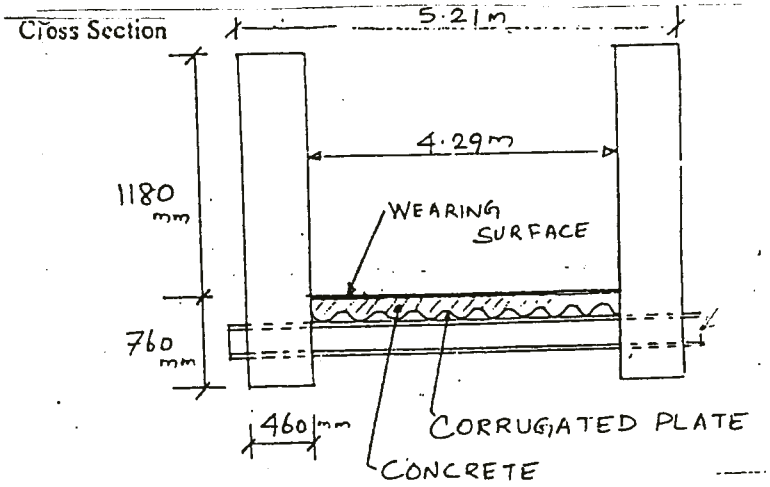

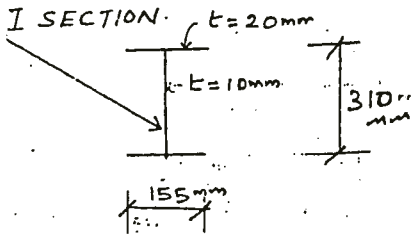

NO. 66 bridge condition

Location		Road No.	Name of road	Km Post
Province	District			
Western	Ganpaha	B111	Ekala-Kotadeniyawa	7/1

Outline of the route

The B111 Road is a B-class national highway running from Ekala, through Minuwangoda and Diwulapitiya, to Kotadeniyawa. Ekala is a town of the A-class National Highway 33 that runs from Ja-Ela of the A-class National Highway 3 (A3) through Ganpaha to the A-class National Highway 1 (A1)

This road runs northward through an approximate midpoint of National Highways A1 and A3 and is an important route to connect towns in the northern part of Gampaha area and Colombo directly through a shortest distance. There are also critical medium cities in Sri Lanka, such as Negombo, Ganpaha, etc. , and important facilities, such as Katunayaka International Airport, air base, Free Tread Zone along this road.

There are coco plantations and apparel factories dotted along B111. This is a critial route essential for economic development of Sri Lanka.

Route map

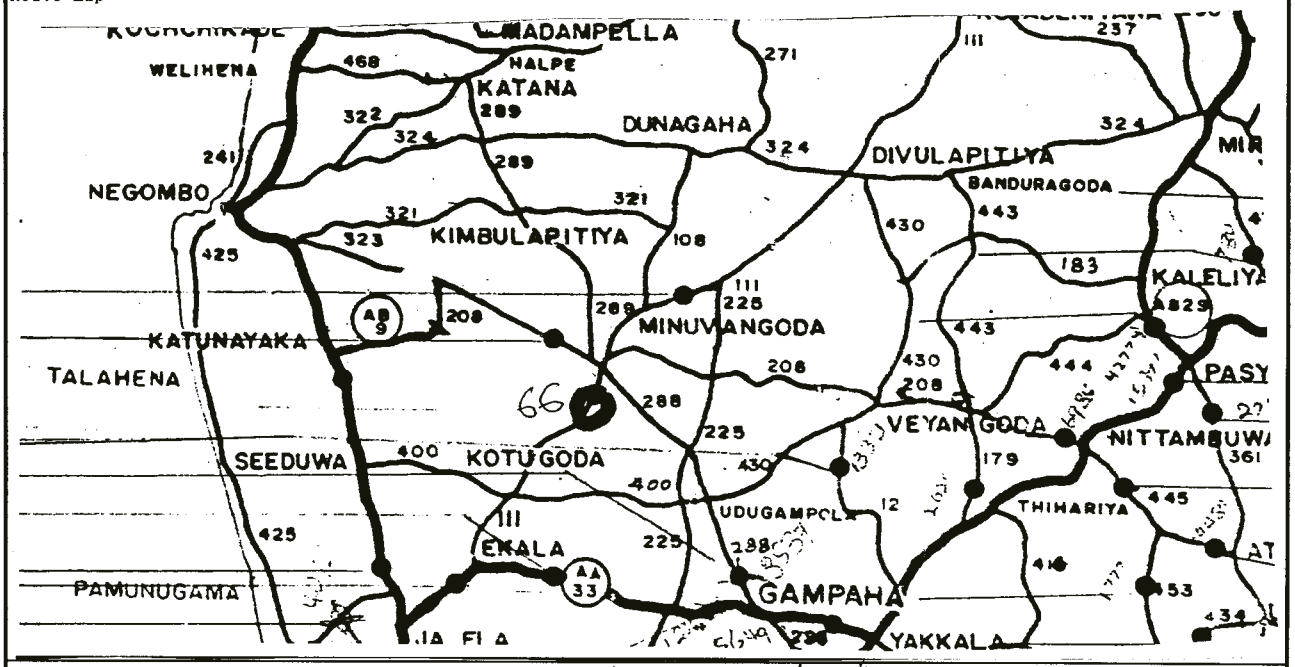

Map of condition around the site

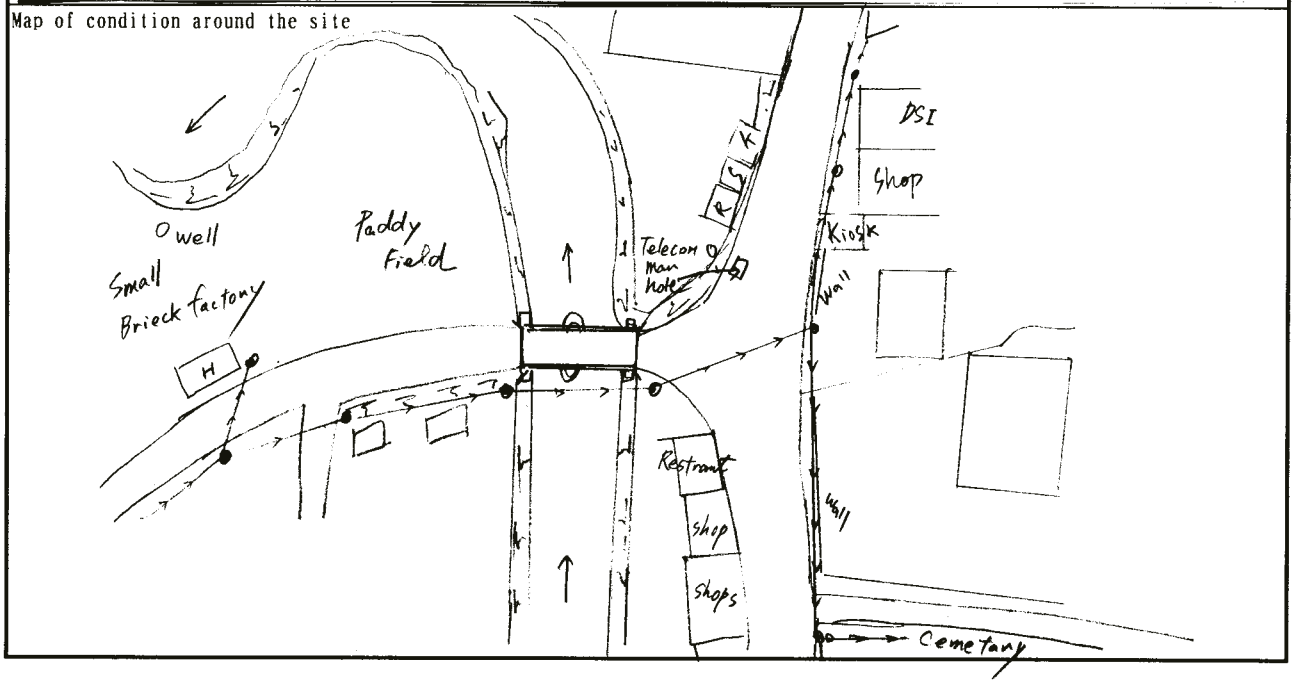

Serial No.66

The general view (longitudinal direction to the bridge axis)

The side view (perpendicular direction to the bridge axis)

Bridge structural data

Structure type : <Superstructure> Two-span simple steel truss girder half-through bridge (Existing bridge drawing made available from RDA)
<Abutment> Stone masonry block structure, with wing wall
<Pier> Reinforced concrete structure

Bridge length : 36.8m Span split : 2@18.4m
Width composition : Effective width 5.50m
Alignment : Straight bridge (Gentle curve from a start point and left turn at a right angle at the end point.)
Year of construction : 1930

Damage condition

Superstructure : Corrosion in steel truss (particularly, bottom chord member), deflection in the intermediate abutment
Repainting appeared to be made.
Substructure : Damage in a part of stone masonry block, deteriorated concrete surface of piers
Accessories : Mud filling expansion joints. Repair mark in front and rear approaches.
Others : Congestion occurring in the front of bridge because of poor road alignment and insufficient road width.

Traffic volume

(): Pedestrians

1999	10,753 vehicles/day
2000	8,165 vehicl (987)

Natural conditions

Topographic features : Flat land
Geological features : Loose sand stratum up to a point near GL-8m and deposite of clayey soil around GL-8~10m. Embankment for the upper 5 m section on the Kotadeniyawa side, under which sand and clayey soil strata exist. (Survey data (1989) obtained from RDA)
River : Curved near the planned bridge site. Flow rate considered not so high.
H.W.L is about 1 m below the truss girder bottom surface (according to the existing bridge drawing).
F.W.L98.710m(1995) according to the RDA data

Surrounding environment

This bridge crosses Aiianagala Oya in front of Kotugoda town for connection to the central part of the town. Private houses are dotted in the front of bridge, with stores lined up at the end point. In addition, there are bus stops and small roads are connected, making up a shape of T-intersection. The road is congested with people waiting for a bus or vehicles stopped waiting for passes on the bridge.
The population along the road is 3000 households (100,000 people) . There is no hospital in Kotugoda. A middle-sized hospital is in Minuwangoda. To visit large hospitals, the people has to go to large cities, such as Negombo, Gampaha, and Colombo. Schools exist on both sides of the bridge, with the number of students being about 3000.

Local condition

Utilities to be transf There is the wire on the side of bridge, which may have to be transferred in certain cases.
Bypass : Bypass exists though it causes a 10km or more detour.

Precipitation

(Unit;mm)

Annual rainfall	1,525	mm
Monthly maximum rainfall	300	mm
Month with maximum rainfall	October	

Current site map

Shown in following page

No. 66

Plan

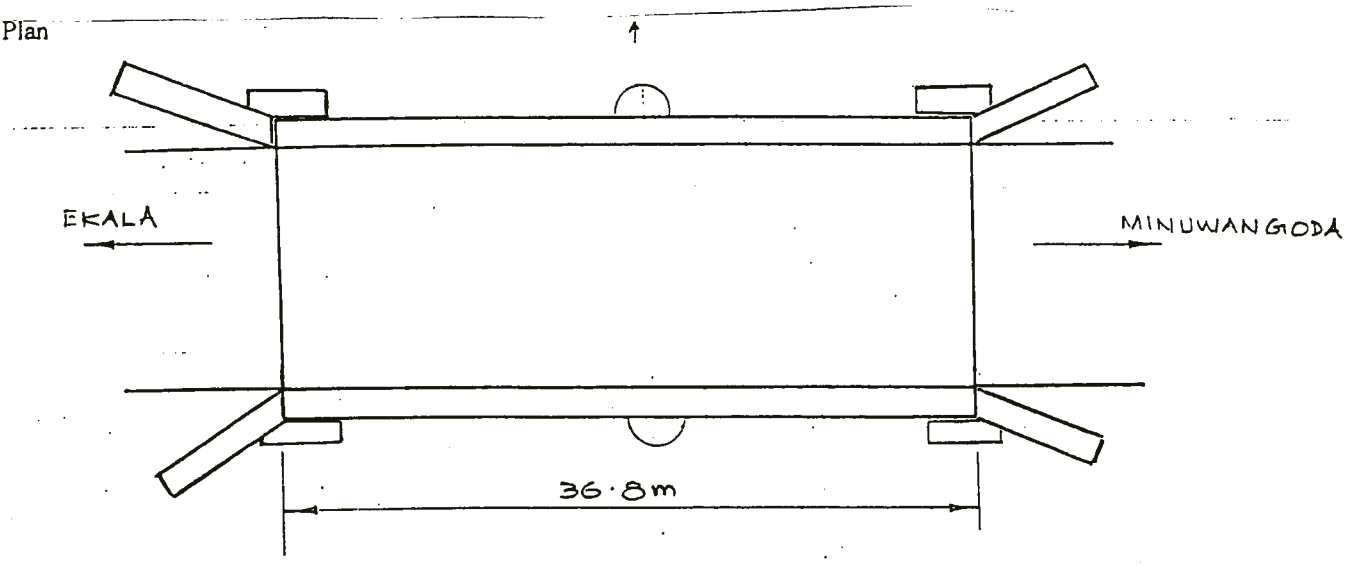

Elevation

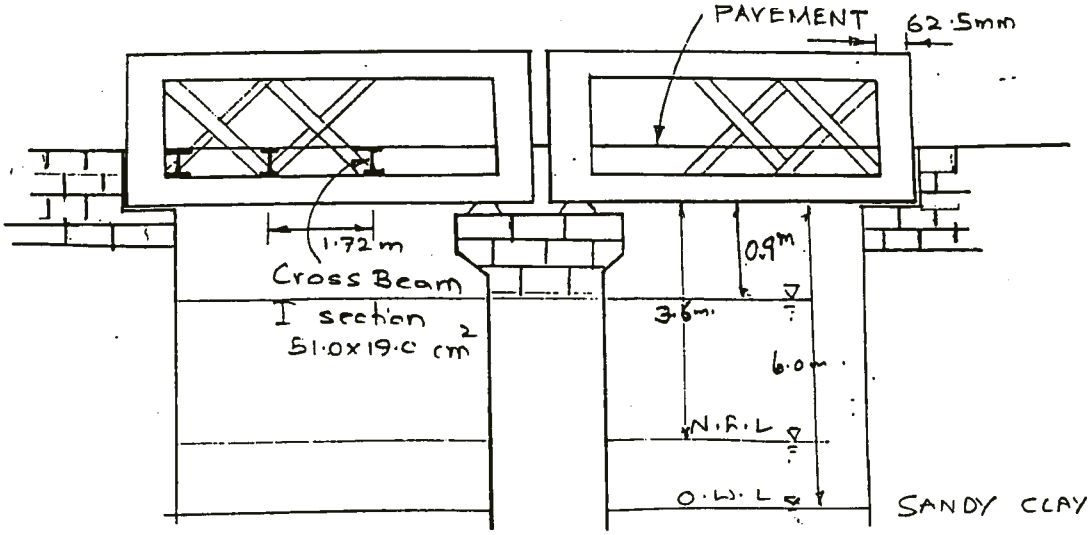

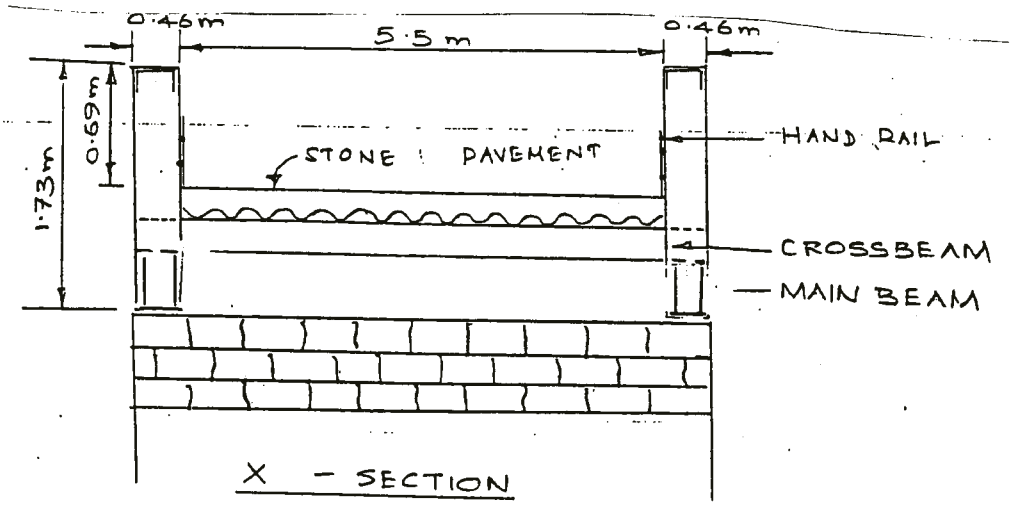

NO. 67 existing bridge condition

Location		Road No.	Name of road	Km Post
Province	District			
Western	Karutara	B157	Horana-Anguruwatota-Aluthgama	23/2

Outline of route

This road is a road that runs from Horona of the A-class National Highway 8 (A8) through Matugama located slightly inland, connecting to the A-class National Highway 2 (A2) at Altugama. Chemical plants are located, in addition to rubber plantations and tea gardens, along this route.

Along this route, the Narutupana bridge is under construction according to the "Five-bridge Replacement Plan" that is one of projects under Japanese grant aid. At a terminal of the road, Bridge No.59 that was stated in this request is being replaced under Sri Lanka's local fund. In addition to development to make this route a trunk road running through a central portion of Karutara, bridge improvement is under way in multiple sites along this route (according to the report of RDA).

Finally, this road runs in the proximity of the Greater Colombo Orbital Road and intersects with the Southern Highway at Munamaluwatta.

Route map

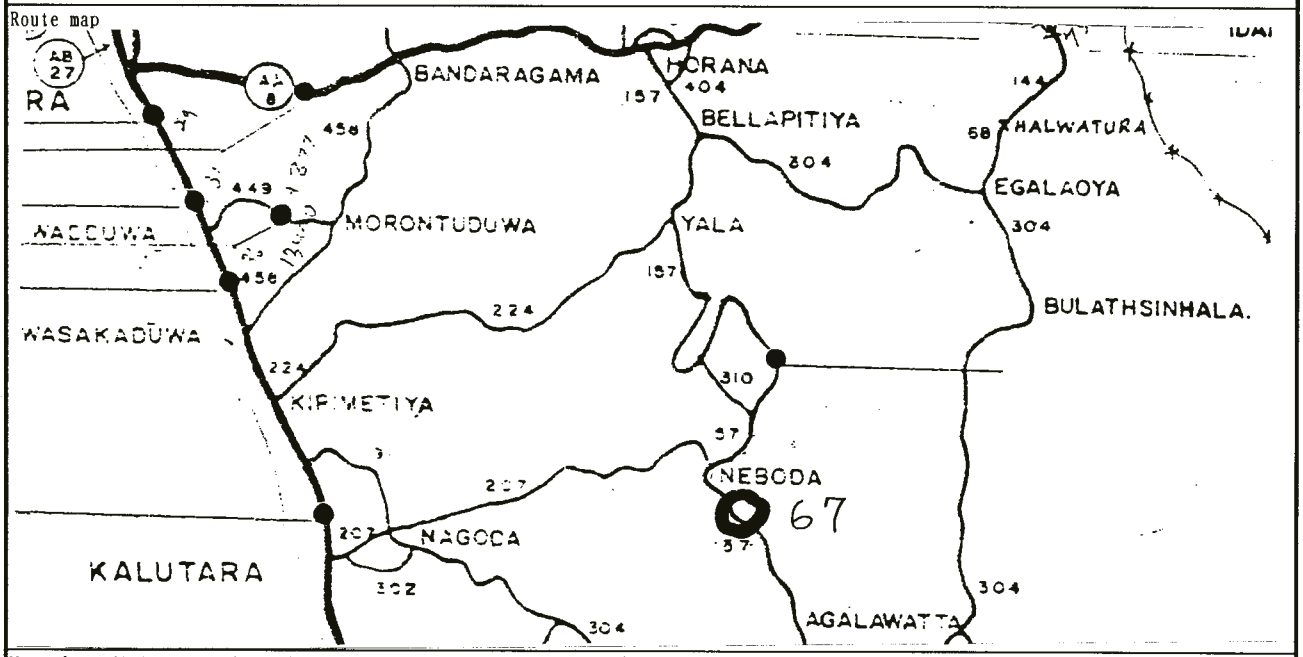

Map of condition around the bridge

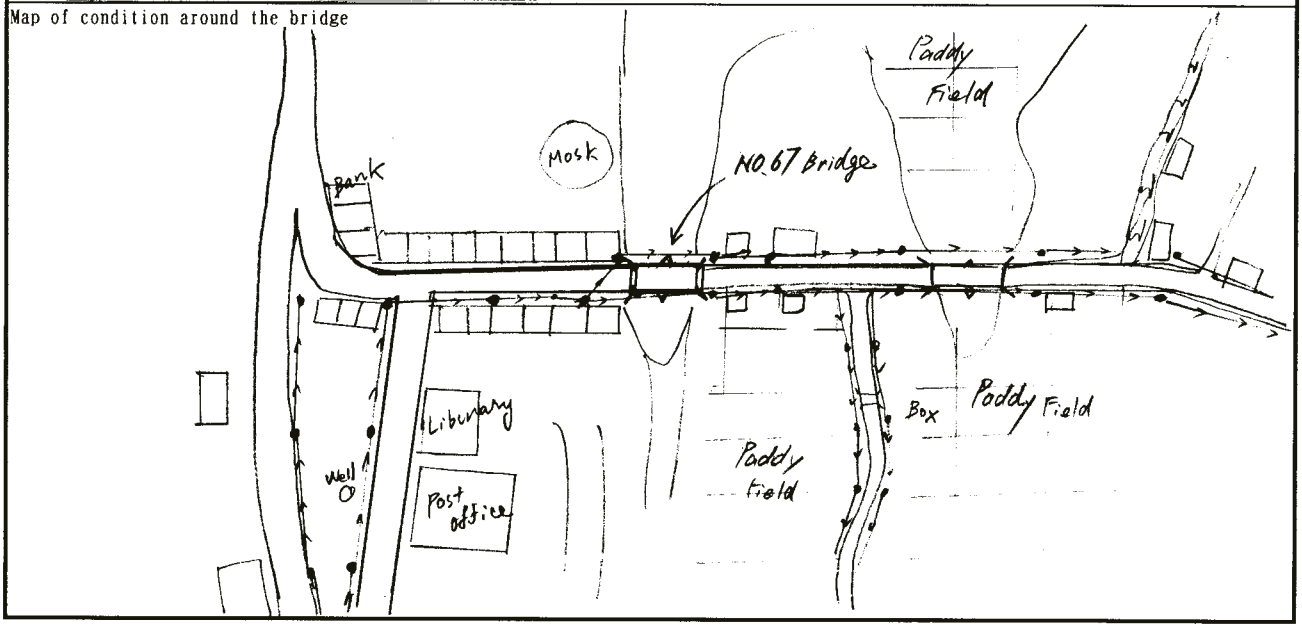

Serial No.67

The general view (longitudinal direction to the bridge axis)

The side view (perpendicular direction to the bridge axis)

Structural data

Structure type :	<Superstructure> Continuous steel I-girder bridge (deck slab)
	<Abutment> Stone masonry block structure
	<Pier> In addition to reinforced concrete structure, support of H steel provided for reinforcement.
Bridge length :	19.10m Span split : 6.0m+2@3.55m+6.0m
Width composition :	Effective width 3.34m
Alignment :	Straight bridge
Year of construction :	1960

Damage condition

Superstructure :	Corrosion of steel I-girder in progress
Substructure :	Corrosion of reinforcement H steel in progress. Deteriorated concrete surface
Accessories :	Deformed guardrails, faulty catch basin, and defective expansion joint
Others :	Insufficient road width

Traffic volume

(): Pedestrians

1999	846 vehicles/day
2000	2,063 vehicle:(1,138)

Natural conditions

Topographical features :	Bridge crossing over a marsh that divides the urban area into two parts. Topography of the bridge site is flat.
Geological features :	The upper portion is considered to be a soft clay stratum as is known from the fact that the bridge site is in the marsh. As reinforcement is made with H steel piles, the bearing stratum is considered to exist in a relatively shallow level (about 3 - 5 m).
River :	Bent at the bridge position. The high water level is considered to be high during rainy season.
Others :	None in particular

Surrounding environment

The bridge crosses over the marsh that divides Neboda town. On the start point, another bridge of the same size exisits with the earth work of about 20 m existing in between. Stores are lined on both sides of both bridges, but they are more dense in the center of Noboda on the end side.
The road width is narrower only on the bridge, but relatively wider in the shopping street. There are many parked vehicles in the shopping street on the end side, making smooth traffic difficult.
The total populaton around this bridge is 2300 households (7500 people). Hospitals and the police academy are located on both banks of this bridge.

Others

Utilities to be transferred :	Water pipes (φ150mm)
Bypass :	20 - 30 km longer when detoured.

Rainfall

(Unit:mm)

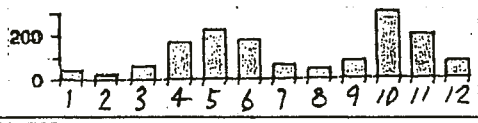

Annual rainfall	1,525	mm
Monthly maximum rainfall	300	mm
Month with maximum rainfall	October	

Current site map

Shown in following page

No. 67

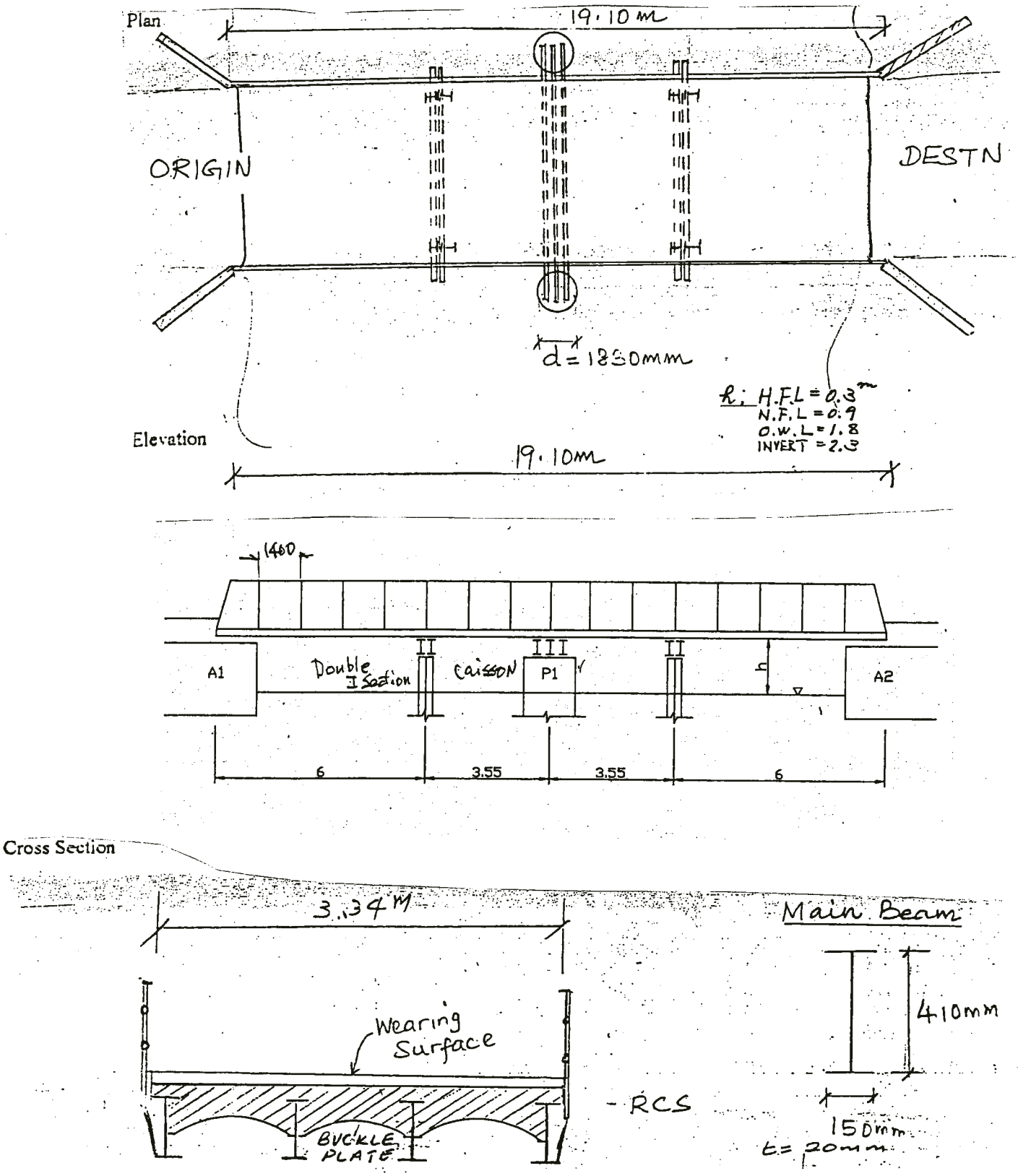
Plan
19.10 m
ORIGIN
DESTN
d = 1850mm
h; H.F.L = 0.3 m
N.F.L = 0.9
O.W.L = 1.8
INVERT = 2.3
Elevation
19.10m
1400
A1
Double I Section
II
Caisson
III
P1
II
h
A2
6
3.55
3.55
6
Cross Section
3.34 M
Main Beam
Wearing Surface
410mm
RCS
BUCKLE PLATE
150mm
t = 20mm