国際協力事業団（JICA）
エジプト国公営企業省（MOPE）
エジプト国環境庁（EEAA）

NO.

エジプト国工業廃水対策調査

ファイナルレポート

Egyptian Iron & Steel Company

設計図書

平成 12 年 12 月

千代田デイムス・アンド・ムーア株式会社
千 代 田 化 工 建 設 株 式 会 社

鉱 調 工
J R
00-189 (6/7)

Document Title **CONCEPTUAL DESIGN REPORT**

Company Name **EGYPTIAN IRON AND STEEL CO.**

Document No. IS - CD - 00 - 01 REV. 0

Project Name THE STUDY ON INDUSTRIAL WASTE WATER POLLUTION CONTROL IN THE ARAB REPUBLIC OF EGYPT

Client JAPAN INTERNATIONAL COOPERATION AGENCY
INDUSTRIAL DEVELOPMENT STUDY DIVISION

Consultant CHIYODA DAMES AND MOORE CO.
CHIYODA CORPORATION

ISSUED DATE 1999. 11. 12

J I CA

	CHCK'D	TECH. APR	APPR'D
SIGN			
DATE			

CONSULTANT

	PRP'D	CHCK'D	APPR'D
SIGN	[illegible]	[illegible]	[illegible]
DATE	11/10 '99	11/10 '99	Nov 11 '99

EGYPTIAN IRON AND STEEL CO.

1. General Outline

(1) Factory Profile

- Foundation: 1954
- Number of employees: 19,500
- Capital: 664,664,000 L.E
- Annual sales: 1,089,600,000 L.E./Year
- Profit: 246,000 L.E/Year
- Production 1,200,000 ton/Y
- Main Products: Hot Rolled Coil, Cold Rolled Coil and Sheet, Medium/Heavy Plates, Wide Flange Beams, Light/Medium Sections, Round Rolled Bars, Ingot, Slabs, Billets

[Production Processes]

(a). Sinter Plant; Russian built 2 x 50m + 4 x 75m str.

(b). Blast Furnace; 575 m^3 BF x 2(1=operation, 1=stopped) + 1,033 m^3 BF x 2(1=operation, 1=stopped)→ (F1=○, F2=X, F3=X, F4=○)

(c). BOF; 80 ton Basic Oxygen Furnace(Converter) x 3

(d). CCM; 6 str Russian built Billet CCM x 3 units (150,180,200mm)
2 str Russian built Slab CCM x 3 units (150-170x1,000mm)

(e). Heavy/Medium/Light Section Mill ; each 1 unit

(f). Hot Strip Mill ; Continuous Rolling Mill x 1unit, 1,200 mm wide

(g). Cold Strip Mill ; Continuous Pickling Line x 1 unit
Reversing Rolling Mill x 2 unit, 1,200 mm wide, Batch Annealing F'ce Skinpass Mill, Cut to Length Line

(2) Production Process Outline

Shown as follows:

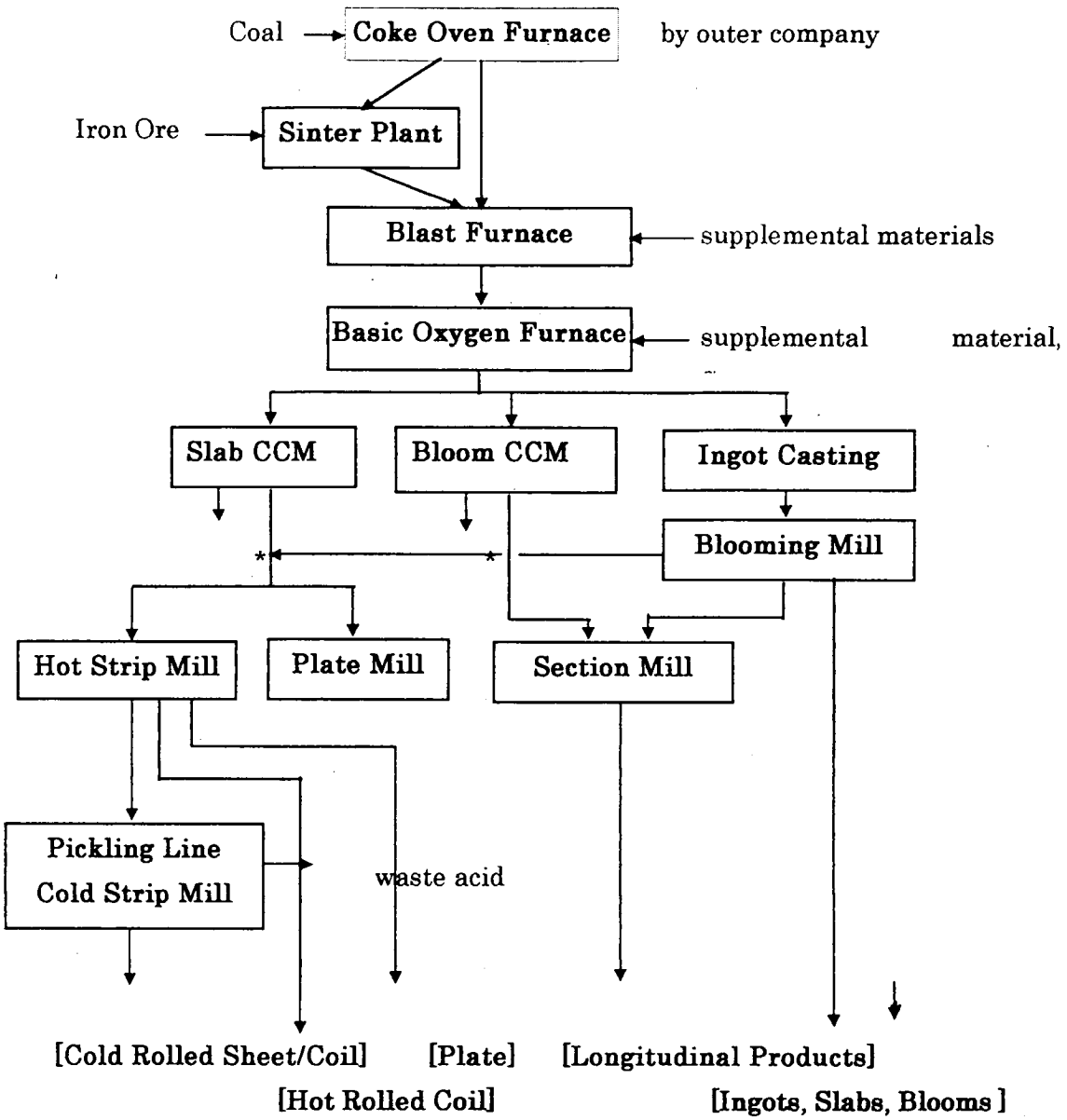

Observation

① Full Line up of Steel production Process

② Raw materials from their own mine

③ High Zinc content in raw material

④ Largest factory in 5 nominated.

⑤ Best environmental management in 5 nominated.

⑥ Well trained organization

⑦ Facilities: partially modernized, potential capacity is large (# to 5 times production rate is expected.)

⑧ Relative cheap in product quality

⑨ Facility management: acceptable level

Discussion with factory

Factory focuses on the following investment by international aid.

a) Renewal of Acid Recovery System in Cold Rolling Mill

b) Zinc Removal for efficient material recycle

2. Waste Water Survey

2.1 Factory Survey

(1) Date Sep.11. – Sep.14, 1999.

(Sampling & Flow Measurement Sep.13)

(2) Person in Charge

1) JICA Study Team T. Toyohara (WWT Engineer)

Y. Hiraiwa (Process Engineer)

2) Egyptian Iron and Steel Co.

Mr. Elmaamoun Abd El Aziz (Gen. Director of Project Dept.)

Mr. Ablu Al Shazly (Chief of Tech. Study Sector)

Mr. Mohammad Fteah, and others (Technical Study Sector)

3) TIMS Dr. Mohamed Radwan

Samiel Hammad Hassen, and others

2.2 Questionnaire

The answer sheets of questionnaire sent before our visit were received at wastewater survey and it is utilized to select 3 representative companies as reference materials.

2.3 Existing Waste Water Sewer System

Refer to DWG. NO. IS-CD-15-01.

2.3.1 Sewer System

(1) Industrial wastewater is discharged to the 2 deserts, which are owned by the factory. One desert is located 10km from the factory, another desert is located 1 km from the factory.

(2) Lagoon supernatant is basically reused as industrial water by 10-holizontal sand filters.

And, the bottom sludge of Lagoon is discharged to the 10 km desert.

(3) Wastewater from cold rolling mill after neutralization is discharged to the 1 km desert.

(4) Sanitary wastewater is separately collected and discharged into city sewer system free of charge.

(5) Water intake from River Nile is 7,000 m^3/h, intake water unit cost is 0.2 LE/m^3.

(6) Water for industrial purpose is well reused and intake for make-up is minimized.

2.3.2 Existing Wastewater Description

(1) Lagoon

1) Influent to Lagoon are Wastewater from Foundry, Sintering Plant, and Scrubbed water from Furnace.

2) Supernatant of Lagoon is sent to Sand Filters, and the treated water is reused as industrial water.

3) The bottom sludge of Lagoon is sent to the treatment facility (Classifier, Clarifier, and Press Filter) and recovered sludge is recycled as a part of raw material. In actual, the treatment facility for dehydration(filter press) is not operated. The bottom sludge is transferred to the desert (10 km distance) through the pump pit because current problem is high Zinc content in recovered sludge (not appropriate for raw material).

4) The pumping water to the desert from the pump pit is manually selected. In order to avoid plugging in the long piping, lagoon supernatant may be periodically discharged using same piping.

5) These facilities were constructed by French aid.

(2) Clarifier for Furnace Scrubber:

1)There are 3 clarifiers(thickeners) for sludge concentration. Treated water is reused for cooling water.

2)Bottom Sludge is sent to Lagoon. Zinc content in sludge is high, therefore, the project in order to solve the problem is ongoing. In order to reduce Zinc content in the lagoon sludge, this project aims to isolate the sludge and to discharge into the desert directly, not to Lagoon. But there is a problem in underground piping connection, at this moment.

(3) Acidic wastewater from Cold Rolling Mill:

This is another "end of pipe" wastewater.

The existing Neutralization Unit operated manually without pH monitoring is installed underground. And, in case of high production operation (3 shift case, normally 2 shift), excess waste sulfuric acid is discharged into Neutralization Unit, due to less capacity of Acid Recovery System.

This is extremely dangerous for operation and so it is necessary to improve the unit urgently. Factory needs to proceed the renewal of Acid Recovery System.

2.4 Waste Water Sampling, Flow Measurement and Analysis

(1) Based on the results discussion with the Factory and sewer survey at site, 8 sampling points were selected. And sampling/flow measurement method were agreed mutually.

(2) Composite sampling (6 hrs-period x 4 times), flow measurement and wastewater qualities (pH, Turbidity, Electric conductivity, Dissolved Oxygen, Salinity, Water temperature) were measured at field every sampling time.

The results of field measurement are shown on Table 1.

(3)Sampling Point: 5 points (Refer to DWG. NO. EI-CD-15-01)

(4)Detail of water qualities were analyzed at TIMS laboratory. (Refer to Table 2).

Table 1-1 Flow rate/Water Quality measured at Site (Sep.13,1999)

	① sludge into Clarifier					② Feed into Sand Filter				
Sampling Time	11:30				Av.	11:15				Av.
Flowrate[m^3/h]	505									
Color	Brown					none				
pH [−]	9.85					9.81				
Turbidity[unit]	523					65				
EC [μS/cm]	838					700				
DO [mg/L]	0.53					5.3				
Salinity [%]	0.03					0.03				
COD_{Mn}(P)[mg/L]	30					10				
W. Temp [℃]	32.3					30.5				

Note 1: ①② are one grab sampling, respectively.

2: COD_{Mn} (P) shows the analysis data by Pack Test.

Table 1-2 Flow rate/Water Quality measured at Site (Sep.13, 1999)

	③ Sand Filter Treated Water				④Scrubber Effluent into Clarifier			
Sampling Time	11:25				11:35			
Flowrate[m^3/h]					0.5			
Color	none				Gray			
pH [−]	9.76				6.21			
Turbidity[[unit]	5				54			
EC [μS/cm]	679				1,000			
DO [mg/L]	4.06				4.04			
Salinity [%]	0.02				0.04			
COD_{Mn}(P)[mg/L]	10				10			
W. Temp [℃]	32.4				39.9			

Note 1: ①② are one grab sampling, respectively.

2: COD_{Mn} (P) shows the analysis data by Pack Test.

Table 1-3 Flow rate/Water Quality measured at Site(Sep.13&14, 1999)

	⑤Clarifier bottom sludge				⑥C/M effluent before neutralize				
Sampling Time	12:30				10:45	16:50	22:00	4:00	Av.
Flowrate[m^3/h]									
Color	Dark gray				Green				
pH [−]	6.62				2.59	2.27	2.83	2.40	2.52
Turbidity[unit]	386				80	61	60	60	65
EC [μS/cm]	920				4,020	7,110	3,500	7,000	5,410
DO [mg/L]	3.87				2.94	2.48	3.33	3.3	3.01
Salinity [%]	0.04				0.20	0.38	0.2	0.4	0.3
COD_{Mn}(P)[mg/L]	20				>100	>100	>100	>100	>100
W. Temp [℃]	38.2				45.2	44.9	42.0	41.0	43.3

Note 1: ⑤ is one grab sample only.

Table 1-4 Flow rate/Water Quality measured at Site (Sep.13, 1999)

	⑦ Neutralized Effluent					⑧ Sample at Desert			
Sampling Time	10:30	16:35	22:30	4:30	Av				
Flowrate[m^3/h]									
Color	none								
pH [−]	11.18	10.96	11.2	11.3	11.16				
Turbidity[[unit]	>1000	>1000	990	990	>1000				
EC [μS/cm]	7,700	5,070	7,800	9,000	7,400				
DO [mg/L]	0.24	0.0	0.0	0.2	0.1				
Salinity [%]	0.41	0.26	0.9	0.5	0.52				
COD_{Mn}(P)[mg/L]	>100	>100	>100	>100	>100				
W. Temp [℃]	40.1	39.6	38	38	39				

Note 1: ⑧ is laboratory analysis only.

Table 2 Analysis Results of Wastewater Qualities(1/2)

Item	No.1 Sludge into Clarifier	No. 2 Feed into Sand Filter	No. 3 Sand Filter T.Water	No. 4 Scrubber Effl. into Clarifier	No. 5 Clarifier bottom sludge	No. 6 C/M Effluent before neutralize	No. 7 Neutral ized Effluent	No. 8 Sample at Desert
Flow [m³/h]	1000	3000	3000	2500	300	150	150	-
EC [μS/cm]	0.838	0.700	0.679	1.000	0.920	5.410	7.390	-
Main content	Ferrous SS	Residual Ferrous SS		Scrubber trapped SS	Scrubber trapped SS	Acid and SS	Lime	
PH [−]	9.81	9.81	9.76	6.21	6.62	2.52	11.16	-
BOD [mg/L]	-	-	Nil	3	--		-	-
COD [mg/L]	33.5	58.25	9.71	19.42	65.98	195.17	16.24	24.5
TDS [mg/L]	987	406	360	580	470	3210	4900	-
SS [mg/L]	18338	34	12	4200	8000	42	3860	
Oil [mg/L]	5	5	248	16	-	-	5	
PO_4[mg/L]	1	8	0.4	0.11	-	-	0.12	
N [mg/L]	23	1					91	
Zn [mg/L]	75	Nil?	136.7?	Total 36 Solub 6	40		Nil	0.168
F [mg/L]				Nil				
THM [mg/L]	76.664							
Pb [mg/L]	1.596	0.02					0.076	0.036
Cd [mg/L]	0.0189	0.1					0.035	Nil
As [mg/L]	0.0136	0.005					0.009	0.006
Cu [mg/L]	0.018	0.031					0.0596	0.02

Note: Analyzed at TIMS laboratory.

3. Conceptual Design

3.1 Philosophy of Conceptual design

(1)Conceptual design 1

In this study, conceptual design 1 (CD-1) means the recommendable wastewater treating system to all wastewater in the Factory to meet the wastewater disposal regulation to Nile River (Law No.4 1994) and water saving point of view.

(2)Conceptual design 2

And, conceptual design 2 (CD-2) means the study of waste water treating system, in case that the demonstration plant will be applied in the factory by JICA. Therefore, wastewater for conceptual design are selected the following points of view:

- Quality: Wastewater should be treated by the treating system consisting of various treating unit processes.
- Quantity: Flow rate (plant capacity) to be treated within limited JICA budget, and wastewater are discharged continuously as possible.
- The plants of wastewater source are operated constantly as possible.

On discussion with JICA Study Team, the Factory requested that wastewater to be studied is limited the wastewater concerning the following units:

1) Renewal of Acid Recovery System in Cold Rolling Mill
2) Zinc Removal for efficient material recycle

3.2 Conceptual Design 1

Conceptual Design 1 was not applied in this Factory.

3.3 Conceptual Design 2

(1)The purpose of the Demonstration Plant features;

1)Adequate operation: manual→automatized neutralization

2)Safety operation: underground→aboveground installation

(2)Design Basis

1)Wastewater:

(a) Acid wastewater from Cold Rolling Mill (RW-1)

(b) Sulfuric Acid Overflow from Acid recovery unit (RW-2)

2)Wastewater and Flow rate:

RW-1	150	m^3/h
RW-2	Normally no flow	

Total 150 m^3/h

3) Water quality

Table 3 Design base of Water Quality

		Neutralization Inlet	Filter Outlet	Nile Regulation Law of No.4
pH	[−]	1~2	7~8	6~9
BOD	[mg/L]	-	-	30
COD	[mg/L]	200	25	40
SS	[mg/L]	50	20	30
Oil & Grease	[mg/L]	<5	<5	5
Zinc	[mg/L]			

(3)Waste Water Treatment System

Refer to DWG. NO. IS-CD-15-03.

Waste water treating facility consists of the following treating unit processes:

1) Pre-treatment

2 stages neutralization is applied.

(a)No.1 Neutralization Vessel

- made of carbon steel with rubber lining
- Mixer

i)Chemical (Caustic soda) injection unit (drums, mixers, pumps) with an automatic pH controller.

ii) In case that Lime as alkali is used, a hopper and dry feeder is used instead of the above injection unit.

(b)No.2 Neutralization Vessel

- made of carbon steel with rubber lining
- Mixer

i)In No.2 Neutralization Vessel. If pH of the water is not adjusted within 6-8, lime milk or NaOH is injected for further neutralization.

ii) Soluble Fe^{2+},Fe^{3+} may be changed to ferric hydrate.

2) Primary Treatment

(a)Oxidation Vessel

- made of carbon steel with resin coating
- blowers, air distributor unit

i)Air is blown into the vessel by a blower to oxidize water.

ii)By oxidation, soluble Fe in the water is removed completely.

(b)Clarifier Unit

[Coagulation/flocculation Unit]

- made of carbon steel with epoxy coating
- Flocculator (Mixer)
- Chemical injection unit: drums, mixers, pumps

i)The effluent from Oxidation vessel is sent to Coagulation Vessel, where coagulant such as alum (aluminum sulfate), NaOH/Lime as pH controller, and polymer as coagulant aid are injected. As a result, flocs made of hydrate and suspended solids will form.

ii) Remaining soluble Fe may work as coagulant, therefore it is necessary to remove soluble Fe completely at Oxidation vessel.

[Clarifier(sedimentation basin)],

- made of carbon steel with epoxy coating
- Sludge collecting rake with a sludge draw-off timer set

i) Flocs will settle on the bottom of sedimentation basin.

ii)Supernatant of the basin is sent to Filter Unit.

iii)Sludge accumulated on the basin is discharged to the Sludge treating Unit automatically, periodically.

3)Advance Treatment

(a) Filter Unit

[Sand Filter]

- made of carbon steel with epoxy coating, 4 sets (1set stand-by)
- Filter media: Anthracite + Sand/Gravel
- Treated water basin(concrete), Backwashing pumps, blowers

i)In Filters, micro flocs carried over from Clarifier is removed.

ii)In case that pressure drop in the filter reached to the specified pressure or every 18-24 hours, filters are backwashed by air and water automatically.

iii)Backwash wastewater is returned to the existing neutralization basin to treat again.

4) Sludge Treating Unit

(a) Sludge Thickener

Gravity separation basin with sludge collecting rake

Made of carbon steel/epoxy

(b) Centrifuge

Horizontal type, stainless steel

i)Solid content of Clarifier bottom sludge is around 1%wt(10g-SS/L).

Therefore, it is thickened in Sludge Thickener by gravity, then dewatered by Centrifuge.

ii)To thicken and dewater effectively, polymers as coagulant are injected to sludge, respectively.

iii)Supernatant of Thickener and separated wastewater by Centrifuge are returned to the existing neutralization basin to treat again.

5) Local Control Room

(a)The control room (Approx. 6m x 12m, ground floor only) is built at the demonstration plant area.

(b)The room consists of a control panel room and an electricity distribution panel room , rest room for operators, toilet, sink locker, etc..

(c)Chemical storage room is also provided.

6)Electricity

(a) Electricity (380V AC x 3 phase x 50HZ) is received from power sub-station at the existing acid recovery plant through underground buried cable along the road. Cable length is approx. 300m.

(b) Approx. 200kVA electricity is used for power, lighting, control for instrument for wastewater treating unit, and air conditioning in the control room.

(4)Disposal of sludge

Soluble Fe and Lime make a large amount of sludge, dewatered cake generates finally at the wastewater treatment plant.

Wastewater in the Factory may not contain any toxic materials such as heavy metals and organic chlorine compounds, therefore, dewatered cake can be dumped to the specified place near desert under management.

(5) Location of Demonstration Plant

Location of Demonstration Plant to be constructed was selected preliminarily a northeast part of the existing neutralization plant by JICA Study Team and the Factory personnel.

The area is approx. m x m of green area now.

(6) Discussion of Treated Water

The wastewater treating system is designed so as to meet Nile River (No.4, 1994), therefore water qualities such as pH, SS, COD so on, are good. But,

Total Dissolved Solids(TDS) content in the cause of Cl^-, SO_4^{2-} is high, therefore it is not suitable for cooling.

Treated water should be disposed to the river/sewer or the desert.

(7) Budgetary Cost Estimation

1) Conditions of Estimation

(a)Major mechanical equipment, electrical equipment, instrument, and valves are purchased out of Egypt (Japan or Europe).

(b)Bulk materials such as pipe and fittings, re-bar, cable are purchased in Egypt.

(c) Large vessels (larger than 3.0m) and tanks is erected at site.
Sand filters made of carbon steel and filter media are purchased from Japan.

(d) Large basins are constructed of reinforced concrete.

(e) Field works are conducted by Egyptian contractors under supervising by Japanese consultants.

(f) Construction at site is proceeded as the standard schedule.

(8)Budgetary Cost Estimation

Table 4 Budgetary Cost Estimation

	Yen Portion	LE Portion	
	[x10³ Yen]	[LE]	[x10³ Yen]
1. Equipment & Materials (1) Mechanical Equipment	83,000		
(2) Elec./Instrument	58,000		
(3) Transportation	18,000		
Sub-Total(1)	159,000		
2.Construction Cost (with Local Materials) (1) Civil/Architecture		684,000	
(2) Installation /Piping		697,000	
(3) Elec./Instrument		660,000	
(4)Commissioning		7,200	
Sub-Total(2)		2,048,200	69,640
3. Indirect Cost (1) Contractor Expenses		512,050	174,10
(2)Supervision Expenses			10,000
Sub-Total(3)		512,050	27,410
Total Cost	256,050 [x10³ Yen]		

Note: 1) Exchange Rate 1 LE = 34 Yen

2) Indirect cost = Direct cost (Field Portion) x 0.25

3) Excluded Supervision Expenses by Japanese consultant.

4)Demarcation of Scope of Work between Egyptian and Japanese Sides has not been decided yet.

(9)Standard Schedule :

Table 4 Standard Construction Schedule

Month / Item		1	3	5	7	9	11	13
Detail Design	*							
1) Procurement		* * * * * * * * * * * *						
2) Transportation				* * * * * * * * * * * *				
3)Civil Work				* * * * * * * * * * * *				
4)Instal./Piping					* * * * * * * * * *			
5)Elec./Instrument						* * * * * * * *		
6)Control Room				* * * * * * *				
7)Commissioning							* *	
Demonstration Operation								*

4. Recommendation of Feasible Improvement for Waste Water Treatment

It seemed that water reuse is ongoing in Factory and oil recovery is well managed. So that there is no special recommendation for WWT.

5. Process Survey

Mainly for Hot Strip Mill and Cold Strip Mill were surveyed. Followings are the major production process of this Works:

(1).General;

This Works is only one Integrated Steel Making Plants having from the Blast Furnace until Rolling Mills in Egypt. Cokes comes form another factory located in the same area. Now two Blast Furnaces of the four Blast Furnaces are under operation due to lack of coke and they are now studying to import coke from China.

The designed production capacity is 1.5 million tons annually but current production is about 1.2 million tons per year, so, 80% of operational ratio. One of main products is "Flat Products" of hot rolled coil, cold rolled coil and sheet and hot rolled heavy plates. And this Works is the only one manufacturer of "Flat Products" in Egypt.

In Egypt, market demand of flat steel product especially hot and cold rolled coil and sheet is about 1.0 million tons per year. Recently this demand is growing, but actual domestic supply is under 50% of the demand. This means, the modification and improvement of process to increase the production, to improve the quality, to expand the application and to become more beneficial and competitive constitution are desirable for this Factory.

All of Iron Ore used in this Factory comes from own mine and it contains 0.16% of Zinc(Zn), this means more than 3,200 tons/year of Zn will get into the process. --- {1,200,000/0.6(assumption of ferrous ratio in ore) x 0.0016 ton/Y} This Zn is solved into dust washing water of Blast Furnace and segregated again in the water circulation system. This segregated Zn disturbs the water circulation functions at cooling tower etc.. This is the raw-material matter and unfortunately we cannot find any reasonable solution now.

(2).Operation and Process;

1).Hot Strip Mill;

This process consist of as follows;

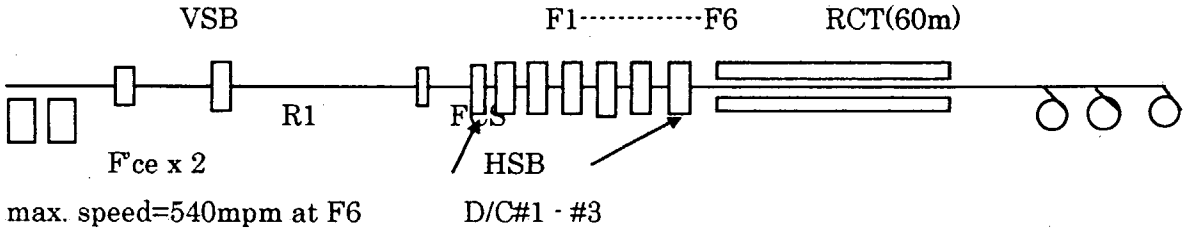

Note;

F'ce ; re-heating Furnace, VSB; Vertical Scale Breaker,

FCS ; Flying Crop Shear, HSB; Horizontal Scale Breaker,

F1 - F6; Finishing Mill #1std - #6 std,

RCT; Run-out Cooling Table, D/C; Down Coilor

This Hot Strip Mill was started up at 1979 and original design is by Russia. CPU control system for rolling mill is newly modernized by French company of CEGELEC in 1996, but on the other hand, mechanical facility seems not modernized. For example strip shape and crown control function is limited as follows;

On Finishing Train;

- Hydraulic A G C.; on F4 - F6
- Work Roll Bender; No
- Work Roll Shift ; No

To get excellent strip quality, these functions shall be modernized.

Actual operation results are as follows(July,'98 - June, '99);

- Production ; 38,456 ton/month
- Operation Time ; 311 hr/month (net production time)
- Productivity ; 124 ton/hr
- *Availability ; 43 %
- Yield ; 95.7 %
- max. Rolling Speed ; 540 m/min at delivery of F6

(Note: *Availability =(operation time-delay time)/operation time

Generally saying, in these type of semi-continuous Hot Strip Mill(HSM) the production capacity is expected has more than 300 ton/hr (and 200,000 ton/month).

But production result of this HSM is less than one fifth(1/5) and productivity is about one third(1/3). Analysis of the contents of delay time (roll change time usually WR change shall be within 60 minutes for all of Finishing stands without automatic roll changing system), cause of the productivity restriction so on and study the countermeasures are required.

2).Pickling Line ;

H_2SO_4 of acid is used in this pickling line with acid recovering system and acid neutralization system. Capability of acid recovering system is restricted, so current operation of pickling line is restricted to 2 shift by 3 shift operation of acid recovering system.

Capability of acid recovering system is as follows;

- Designed ; 5.0 m^3/hr
- Current Operation; 2.5 m^3/hr
- Necessary ; 8.0 m^3/hr (for 3 shift of pickling line operation)

So, improvement of acid recovering system is desirable.

In future modernization of pickling process into HCl acid turbulence system with mechanical scale breaker will be recommendable.

By this process, pickling speed can be extremely increased as follows;

- Current pickling speed in bathes; 120 m/min
- Modern system ; 300 m/min (2.5 times)

---"HCl acid turbulence + mechanical scale breaker"

3).Cold Strip Mill;

In this Works, type of Cold Strip Mill(CSM) is reverse rolling mill, and production process is as follows;

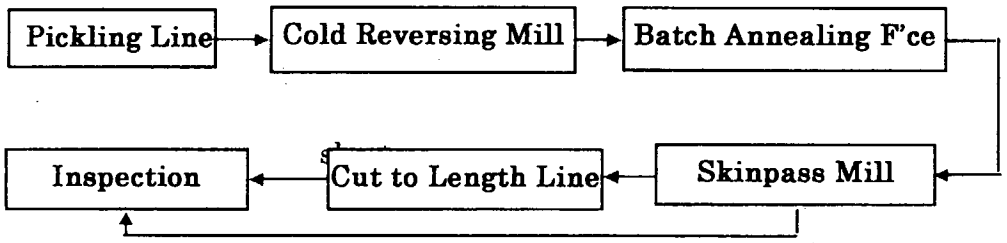

Coil

In this Factory, no ECL (Electrolytic Cleaning Line) is installed, but to get better surface cleanliness and quality, adoption of ECL process is recommendable. Or if not, 100% Hydrogen type of Batch Annealing Furnace is better.

Form the qualitative point of view the floor of Cold Strip Mill must be kept cleanly

In future, for the modernize CSM, adoption of Tandem Cold Mill is recommendable, and in this case, continuous rolling system with the connection of Pickling Line and tandem Rolling Mill is the most advanced technology. This technology is applied into the many Japanese Steel Industries.

(3).Equipment;

Regarding Hot strip Mill, CPU control system is fine, but maintenance

condition for mechanical equipment looks a little bit poor. For example too large gap at the slide liner on the rolling mill is exist and this brings unstable rolling behavior.

At the down coiler, coiled edge of material is not fairly aligned due to inadequate guiding, so on.

In the Cold Strip Mill bay, acid fume get out into the bay area from the pickling tank. This affects on the equipment, on coil quality and on job condition. So, sealing of the acid tank shall be improved. Worsen of capability on the acid recovery system includes maintenance matter also. to keep the original function of system better maintenance activities is required.

(4).Environmental;

Almost all of water system in this Factory consist of closed circuit, so basically there is less environmental problem on the water route. Capability of acid recovery system and acid neutralization system seems not always environmental matter but production matter.

(5) Conclusion;

On the environmental point of view, this Factory has less problem on the water route, because all of their water systems are closed circuit. On the other hand, from the productive point of view they must has much potential of production capability than current situation.

To become more competitive and more beneficial constitution, some modernization for equipment and process is recommendable as above mentioned. This is the quite important theme on the management of this company.

DRAWING LIST OF CONCEPTUAL DESIGN

[EGYPTIAN IRON AND STEEL CO.]

NO	DRAWING NAME	DWG. NO.	REV.	DATE	NOTE
1	FLOW SHEET				
1)	SCHEMATIC DIAGRAM OF EXISTING WASTE WATER FLOW	IS-CD-15-01	0	1999.10.13	
2)	CONCEPTUAL DESIGN OF WASTE WATER FLOW	IS-CD-15-02	0	1999.10.16	
3)	BLOCK FLOW DIAGRAM OF				
	W.W.T. DEMONSTRATION PLANT	IS-CD-15-04	0	1999.10.13	
4)	CONCEPTUAL DESIGN FOR				
	SCHEMATIC DIAGRUM OF W.W.T DEMONSTRATION PLANT	IS-CD-15-04	0	1999.10.13	
2	PLOT PLAN				
~~1)~~	~~LOCATION OF W.W.T. DEMONSTRATION PLANT~~	~~IS-CD-12-01~~	~~0~~		on drawing
2)	PLOT PLAN FOR CONCEPTUAL DESIGN OF				
	W.W.T. DEMONSTRATION PLANT	IS-CD-12-02	0	1999.10.13	

NOTE:

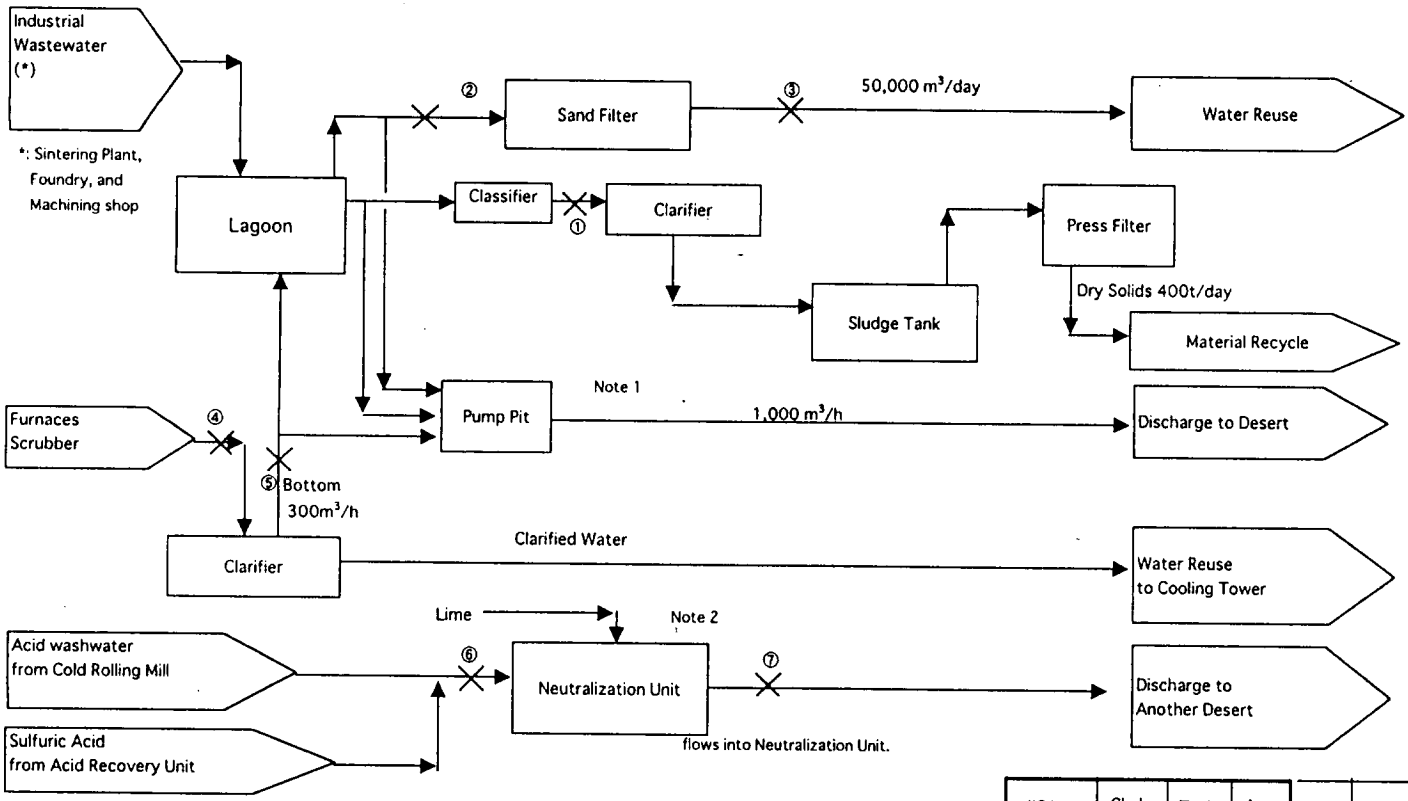

Note
1. Pump Pit
Pumping water source is manually selected.

2. Neutralization Pit
- Neutralization Unit is located underground.
- Manual Neutralization
- Acid Recovery Unit is less capacity.
In the case of "3 shift full operation", sulfuric acid from Acid Recovery Unit flows into Neutralization Unit.

Sampling Point / Analytical Item	Unit	①	②	③	④	⑤	⑥	⑦
Flow Rate	m³/h	1000	3000	3000	2500	300	150	150
pH	—	9.85	9.81	9.76	6.21	6.62	2.59	11.2
Conductivity	μS/cm	833.000	700	679	1,000	920	6000	7000
Turbidity	NTU	523	65	5	54	386	65	995
Water Temp.	℃	32.3	30.5	32.4	39.9	38.2	43.5	39.5
Salinity	%	0.03	0.03	0.02	0.04	0.04	0.27	0.51
COD**	mg/L	33.5	58.3	9.7	19.4	66	194.1	16.2

* : Field Measurement(Average)
**: Lab. Analysis

JICA	Chck	Tech	Appr
Sign			
Date			
CNSLT	Dsgn	Chck	Appr
Sign			
Date	11/10 '99	11/10 '99	Nov.11

Rev	Description	Dsgn	Chck	Appr	Date
	REVISION				

CLIENT	JAPAN INTERNATIONAL COOPERATION AGENCY INDUSTRIAL DEVELOPMENT STUDY DIVISION
CONSULTANT	CHIYODA DAMES & MOORE CO. CHIYODA CORPORATION
PROJECT	THE STUDY ON INDUSTRIAL WASTE WATER POLLUTION CONTROL IN THE ARAB REPUBLIC OF EGYPT
TITLE	FOR EGYPTIAN IRON AND STEEL CO. SCHEMATIC DIAGRAM OF EXISTING WASTE WATER FLOW
ISSUED DATE	1999. 11. 12
SCALE	Non
DWG NO	IS-CD-15-01
REV.	0

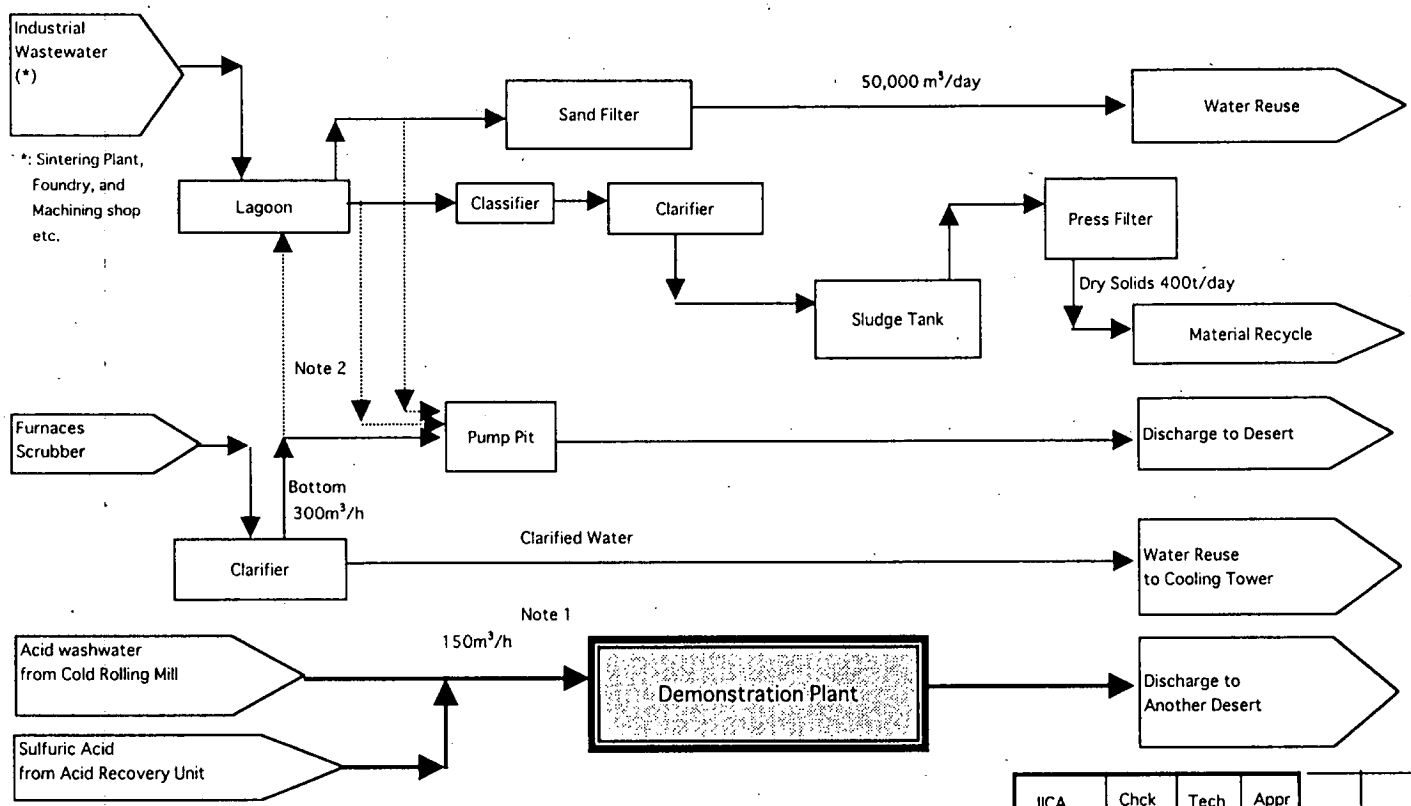

Note 1:

Demonstration Plant to be installed is replacement of the existing neutralization unit. Details of Demonstration Plant shall be referred to IS-CD-15-02.

Note 2:

According to the factory, Zinc sludge isolation is an ongoing project.

JICA	Chck	Tech	Appr						
Sign									
Date									
CNSLT	Dsgn	Chck	Appr						
Sign	HT			Rev	Description	Dsgn	Chck	Appr	Date
Date	1/3 '94	11/10 '99	Nov 11 '99	REVISION					

CLIENT	JAPAN INTERNATIONAL COOPERATION AGENCY INDUSTRIAL DEVELOPMENT STUDY DIVISION		
CONSULTANT	CHIYODA DAMES & MOORE CO. CHIYODA CORPORATION		
PROJECT	THE STUDY ON INDUSTRIAL WASTE WATER POLLUTION CONTROL IN THE ARAB REPUBLIC OF EGYPT		
TITLE	FOR EGYPTIAN IRON AND STEEL CO. CONCEPTUAL DESIGN OF WASTE WATER FLOW		
ISSUED DATE	1999. 11. 12	SCALE	Non
DWG NO	IS-CD-15-02	REV.	0

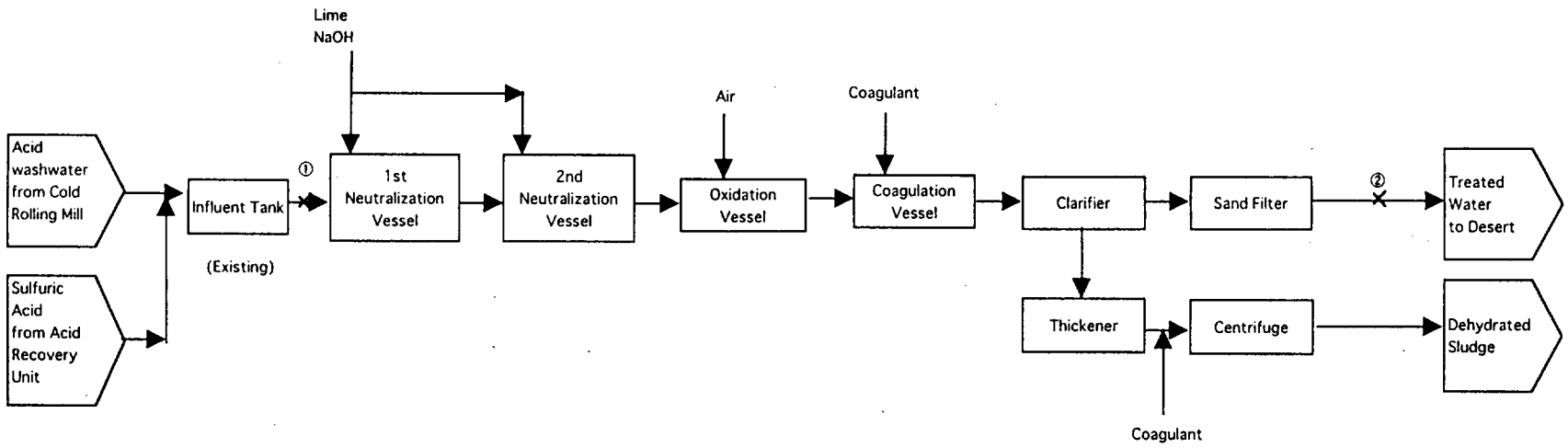

Analytical Item	Unit	①	②	Nile Regulation
Flow Rate	m^3/h	150	150	
pH	—	1-2	7-8	6-9
SS	mg/L	50	<20	30
BOD	mg/L	-	-	20
COD	mg/L	200	20	30
Water Temp.	℃	45	45	<35
Conductivity	μS/cm	6,000	8,000	-

JICA	Chck	Tech	Appr
Sign			
Date			
CNSLT	Dsgn	Chck	Appr
Sign	HT		
Date	11/10 '99	11/10 '99	Nov. 11 '99

Rev	Description	Dsgn	Chck	Appr	Date
	REVISION				

CLIENT	JAPAN INTERNATIONAL COOPERATION AGENCY INDUSTRIAL DEVELOPMENT STUDY DIVISION		
CONSULTANT	CHIYODA DAMES & MOORE CO. CHIYODA CORPORATION		
PROJECT	THE STUDY ON INDUSTRIAL WASTE WATER POLLUTION CONTROL IN THE ARAB REPUBLIC OF EGYPT		
TITLE	FOR EGYPTIAN IRON AND STEEL CO. BLOCK FLOW DIAGRAM OF W.W.T. DEMONTRATION PLANT		
ISSUED DATE	1999. 11. 12	SCALE	Non
DWG NO	IS-CD-15-03	REV.	0

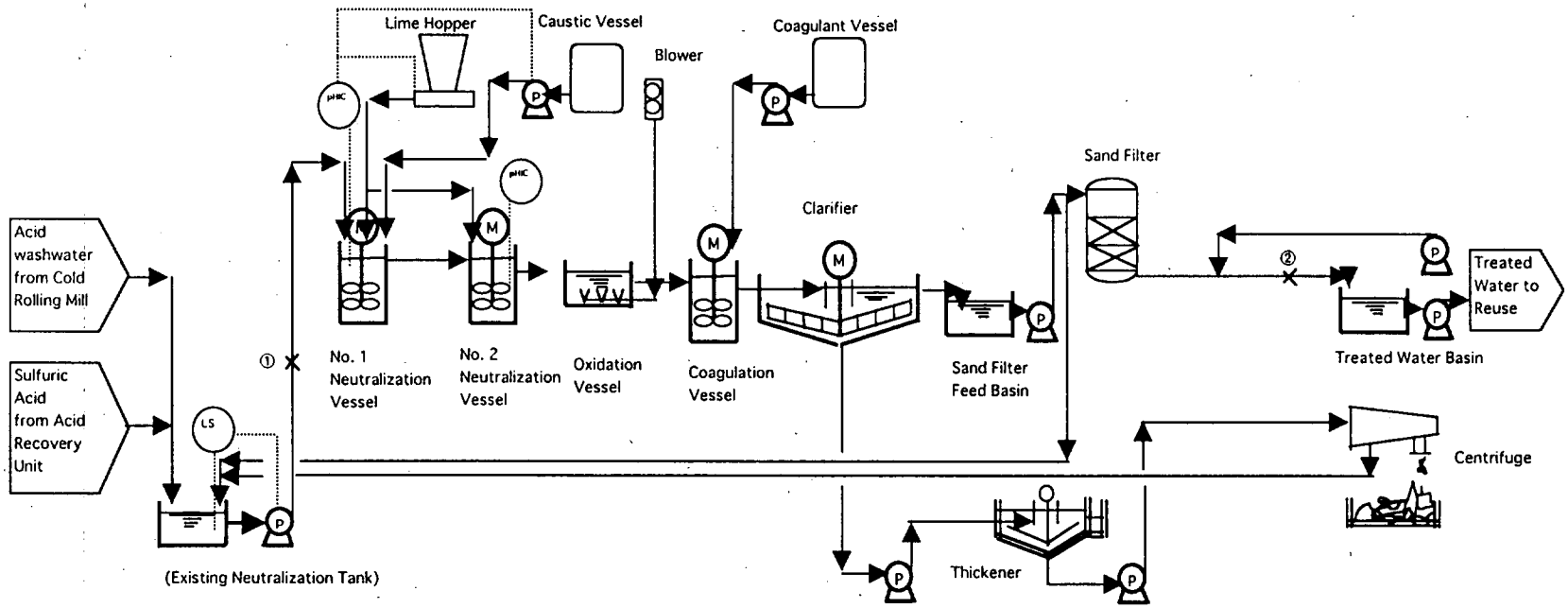

Analytical Item	Unit	①	②	Nile Regulation
Flow Rate	m^3/h	150	150	
pH	—	1-2	7-8	6-9
SS	mg/L	50	<20	30
BOD	mg/L	-	-	20
COD	mg/L	200	20	30
Water Temp.	℃	45	45	<35
Conductivity	μS/cm	6,000	8,000	-

JICA	Chck	Tech	Appr
Sign			
Date			
CNSLT	Dsgn	Chck	Appr
Sign	HT	[illegible]	[illegible]
Date	11/10'99	11/10'99	Nov.11 99

Rev	Description	Dsgn	Chck	Appr	Date
	REVISION				

CLIENT	JAPAN INTERNATIONAL COOPERATION AGENCY INDUSTRIAL DEVELOPMENT STUDY DIVISION		
CONSULTANT	CHIYODA DAMES & MOORE CO. CHIYODA CORPORATION		
PROJECT	THE STUDY ON INDUSTRIAL WASTE WATER POLLUTION CONTROL IN THE ARAB REPUBLIC OF EGYPT		
TITLE	FOR EGYPTIAN IRON AND STEEL CO. SCHEMATIC DIAGRAM OF W.W.T. DEMONTRATION PLANT		
ISSUED DATE	1999. 11. 12	SCALE	Non
DWG NO	IS-CD-15-04	REV.	0

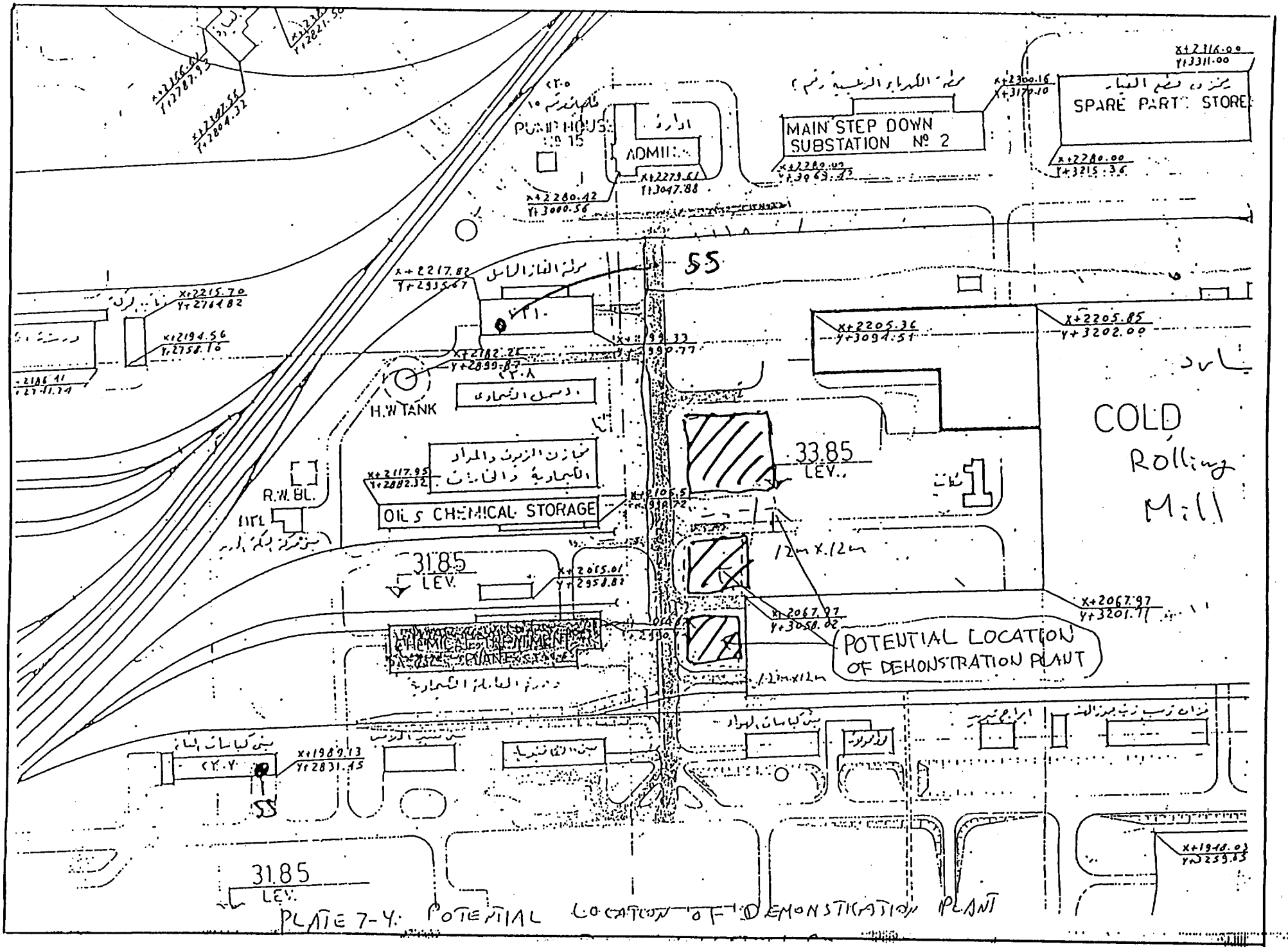

PLATE 7-4: POTENTIAL LOCATION OF DEMONSTRATION PLANT

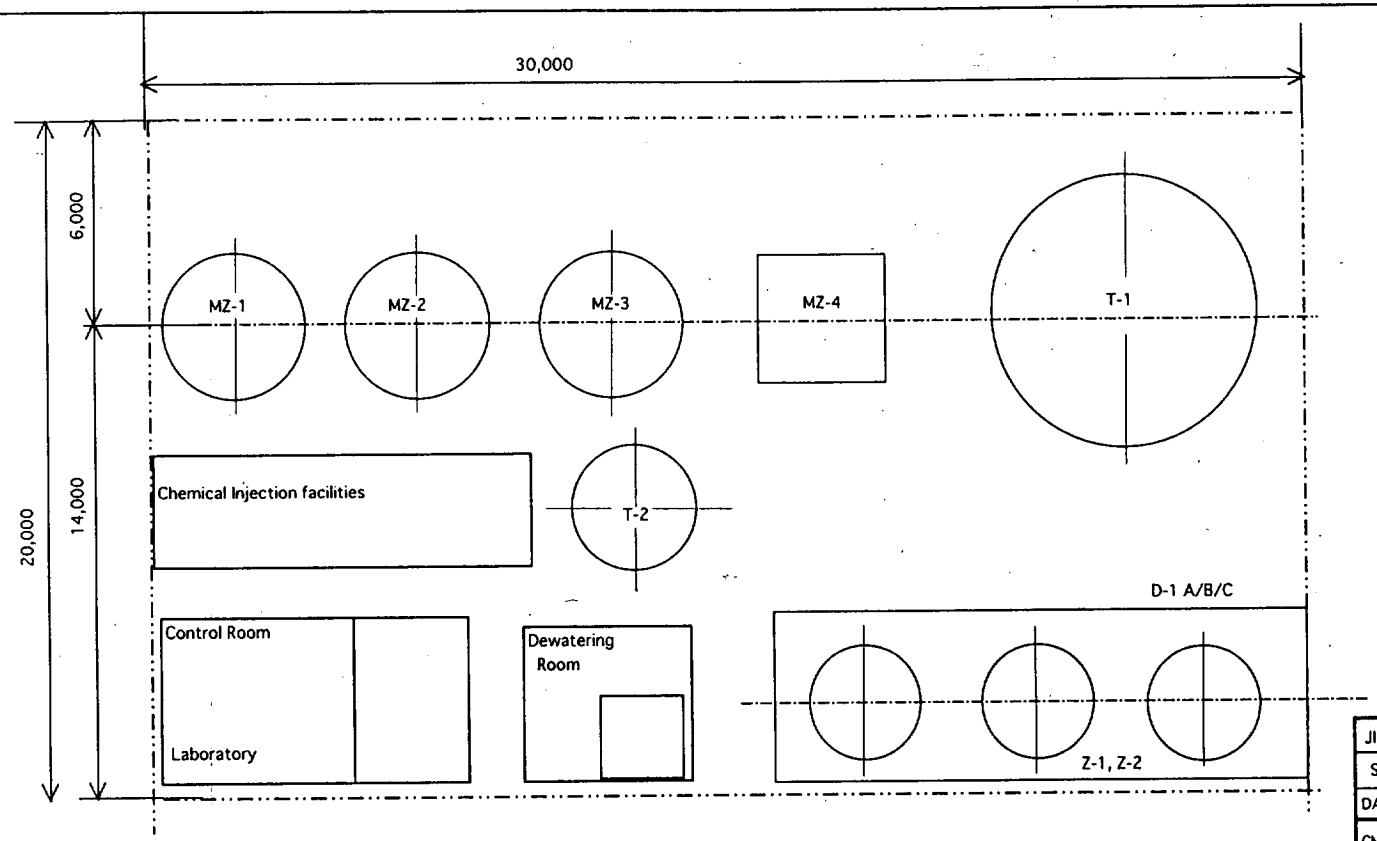

MZ-1	No. 1 Neutralization Vessel	4,600φ×5,000H
MZ-2	No. 2 Neutralization Vessel	4,600φ×5,000H
MZ-3	Oxidation Vessel	4,600φ×5,000H
MZ-4	Coagulation Vessel	7,000φ×4,000H
T-1	Clarifier	1,600φ×4,000H
T-2	Thickener	4,000φ×4,000H
D-1 A/B/C	sand Filter	3,600φ×4,000H
Z-1, Z-2	Filter Feed Tank / Filtered Water Tank	5,000L×15,000W

JICA	CHCK	TECH.	APPR						
SIGN									
DATE									
CNSLT	DSGN	CHCK	APPR						
SIGN				Rev	Description	Dsgn	Chck	Appr	Date
DATE					REVISION				

CLIENT	JAPAN INTERNATIONAL COOPERATION AGENCY INDUSTRIAL DEVELOPMENT STUDY DIVISION		
CONSULTANT	CHIYODA DAMES & MOORE CO. CHIYODA CORPORATION		
PROJECT	THE STUDY ON INDUSTRIAL WASTE WATER POLLUTION CONTROL IN THE ARAB REPUBLIC OF EGYPT		
TITLE	FOR EGYPTIAN IRON AND STEEL CO. PLOT PLAN FOR CONCEPTUAL DESIGN OF W. W. T. DEMONSTRATION PLANT		
ISSUED DATE	1999. 11. 12	SCALE	1/250
DWG NO	IS-CD12-01	REV.	0

Table-1 EQUIPMENT LIST
EGYPTIAN IRON AND STEEL CO.

CLIENT	:Japan International Cooperation Agency
PROJECT	:The Study on Industrial W. W. Pollution Control
PLANT	:W.W.T. DEMONSTRATION PLANT
WASTE W.	Cold Mill Waste Water

REV	1	2	3	MADE	H.T.
BY				CHKD	
APVE				APVE	
DATE				DATE	1999.10.04

Equipment NO.	Service	No. Req'd	Type of Equipment	Remarks
MZ-1	1st Neutralization Vessel	1	75 m^3, CS+Rubber Lined	Mixer, Lime Hopper, Caustic Vessel and pump
MZ-2	2nd Neutralization Vessel	1	75 m^3, CS+Rubber Lined	Mixer
MZ-3	Oxidation Vessel	1	75 m^3, CS+Epoxy Lined	Blower,
MZ-4	Coagulation Vessel	1	75 m^3, CS+Epoxy Lined	Coagulant Injection system
T-1	Clarifier	1	7.5 mφ, Concrete Pit	
T-2	Thickener	1	4.0 mφ, Concrete Pit	
Z-1	Sand Filter Feed Basin	1	75 m^3, Concrete Pit	
D-1A/B/C	Sand Filter	2+1S	75m^3/h, Cyrindrical Type	Blower, Backwash Pump
			Carbon Steel/Epoxy Coating	
Z-2	Treated Water Basin	1	150m^3, Concrete Basin	Treated water Pump
MZ-5	Centrifuge	1	8m^3/h, Centrifuge	Coagulant Drum/Mixer, Hopper

NOTE:

Table-2 INSTRUMENT LIST
EGYPTIAN IRON AND STEEL CO.

CLIENT	:Japan International Cooperation Agency	REV	1	2	3	MADE	H.T.
PROJECT	:The Study on Industrial Waste Water P.	BY				CHKD	
PLANT	:DEMONSTRATION PLANT	APVE				APPR	
WASTE W.	: Cold Mill Waste Water	DATE				DATE	1999.09.26

Equipment NO.	Service	No. Req'd	Type of Instrument	Remarks
FI-1	Flow Indicator	1	0-150m3/h	
			Raw Water Pump Outlet	
FI-2	Flow Indicator	2	0-75m3/h	
			Filter Feeding Pump Outlet	
FI-3	Flow Indicator	1	0-400m3/h	
			Backwashing Pump Outlet	
FI-4	Flow Indicator	1	0-5m3/h	
			Thickener Feed Pump	
FI-5	Flow Indicator	1		
			Blower Outlet	
FI-6,7,8,9	Flow Indicator	4	Suitable type for each chemicals	
			Chemicals feeding	
AICpH-1	pH Indicator/Controler	1	Electrode, pH 4-10	
AICpH-2	pH Indicator/Controler	1	Electrode, pH 4-10	

Note:

This table indicates major instrument only.

DOCUMENT TYTLE: **STANDARD SKETCH DRAWINGS OF**

W.W.T. MAJOR EQUIPMENT

DOCUMENT NO. STD - CD - 20/50-01 REV. 0

PROJECT: THE STUDY ON INDUSTRIAL WASTE WATER

POLLUTION CONTROL IN

THE ARAB REPUBLIC OF EGYPT

CLIENT: JAPAN INTERNATIONAL COOPERATION AGENCY

INDUSTRIAL DEVELOPMENT STUDY DIVISION

CONSULTANT: CHIYODA DAMES AND MOORE CO.

CHIYODA CORPORATION

ISSUDED DATE: 1999. 10. 18

JICA

	CHCK'D	TECH.	APPR'D
SIGN			
DATE			

CONSULTANT

	DSGN	CHCK'D	APPR'D
SIGN	[illegible]	[illegible]	[illegible]
DATE	Oct.18.'99	Oct.18.'99	Nov.11'99

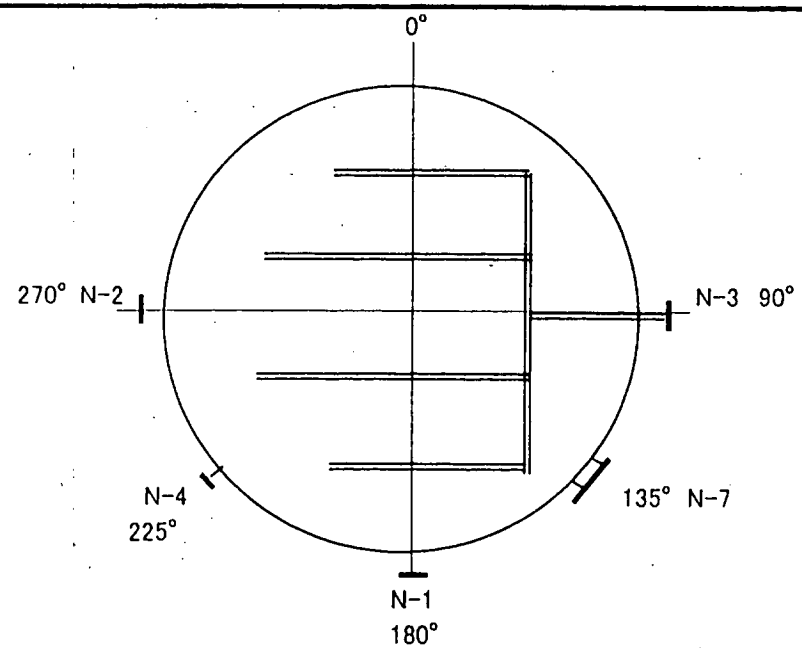

1)Type: Cylindrical Tank
(Open Top Tank)
2)Materials: Carbon Steel
inside Epoxy Coating
3)Accessories: Stairway

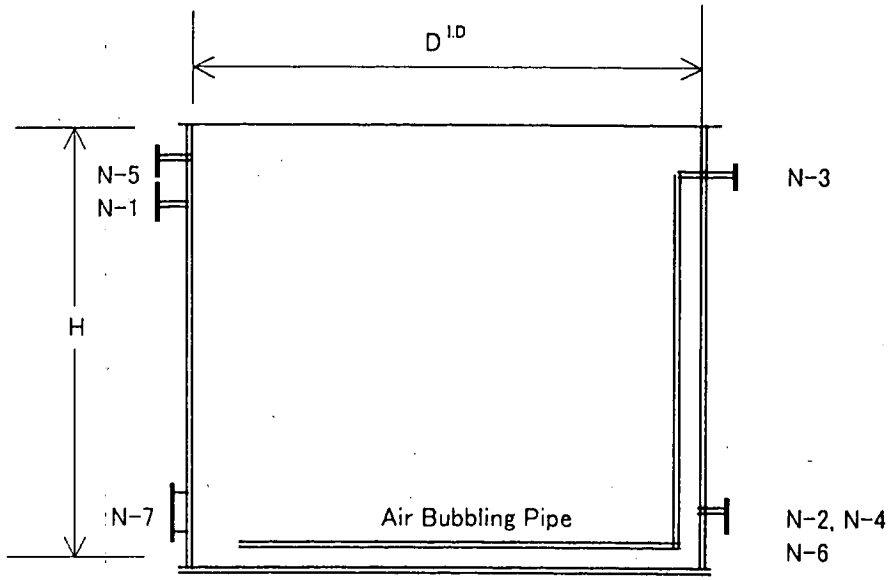

Nozzle No	Name	Size	No	Note
N-7	Manhole	500A	1	
N-6	Level Instrument		1	
N-5	Over Flow		1	
N-4	Drain		1	
N-3	Bubbling Air Inlet		1	
N-2	Raw Water Outlet		1	
N-1	Raw Water inlet		1	

CLIENT	JAPAN INTERNATIONAL COOPERATION AGENCY
TYTLE	FOR: WASTE WATER TREATMENT UNIT STANDARD DRAWING OF _____m^3 EQUALIZATION TANK (T-1)
DWG. NO.	STD - CD - 22 - SK01 REV.0

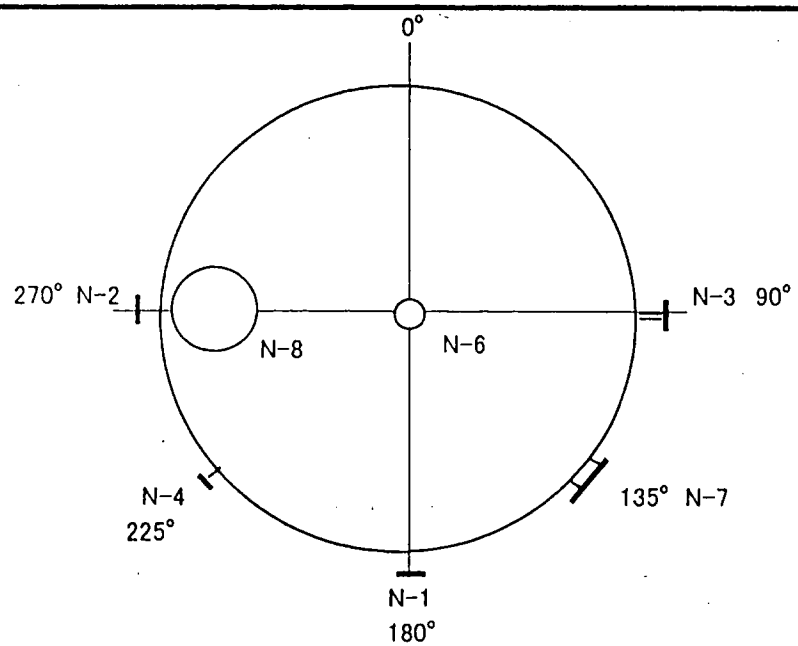

1)Type: Cylindrical Tank
(Cone Roof Tank)
2)Materials: Carbon Steel
inside Epoxy Coating
3)Accessories: Stairway

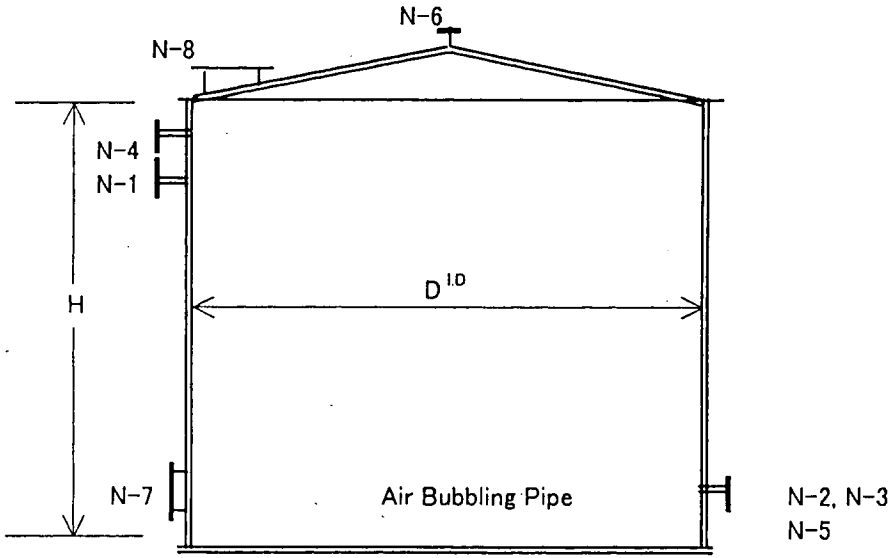

Nozzle No	Name	Size	No	Note
N-8	Roof Manhole	450A	1	
N-7	Manhole	500A	1	
N-6	Air Vent		1	
N-5	Level Instrument		1	
N-4	Over Flow		1	
N-3	Drain		1	
N-2	Raw Water Outlet		1	
N-1	Raw Water inlet		1	

CLIENT	JAPAN INTERNATIONAL COOPERATION AGENCY
TYTLE	FOR: WASTE WATER TREATMENT UNIT STANDARD DRAWING OF _____m^3 STORAGE TANK (T-2)
DWG. NO.	STD - CD - 22 - SK02 REV.0

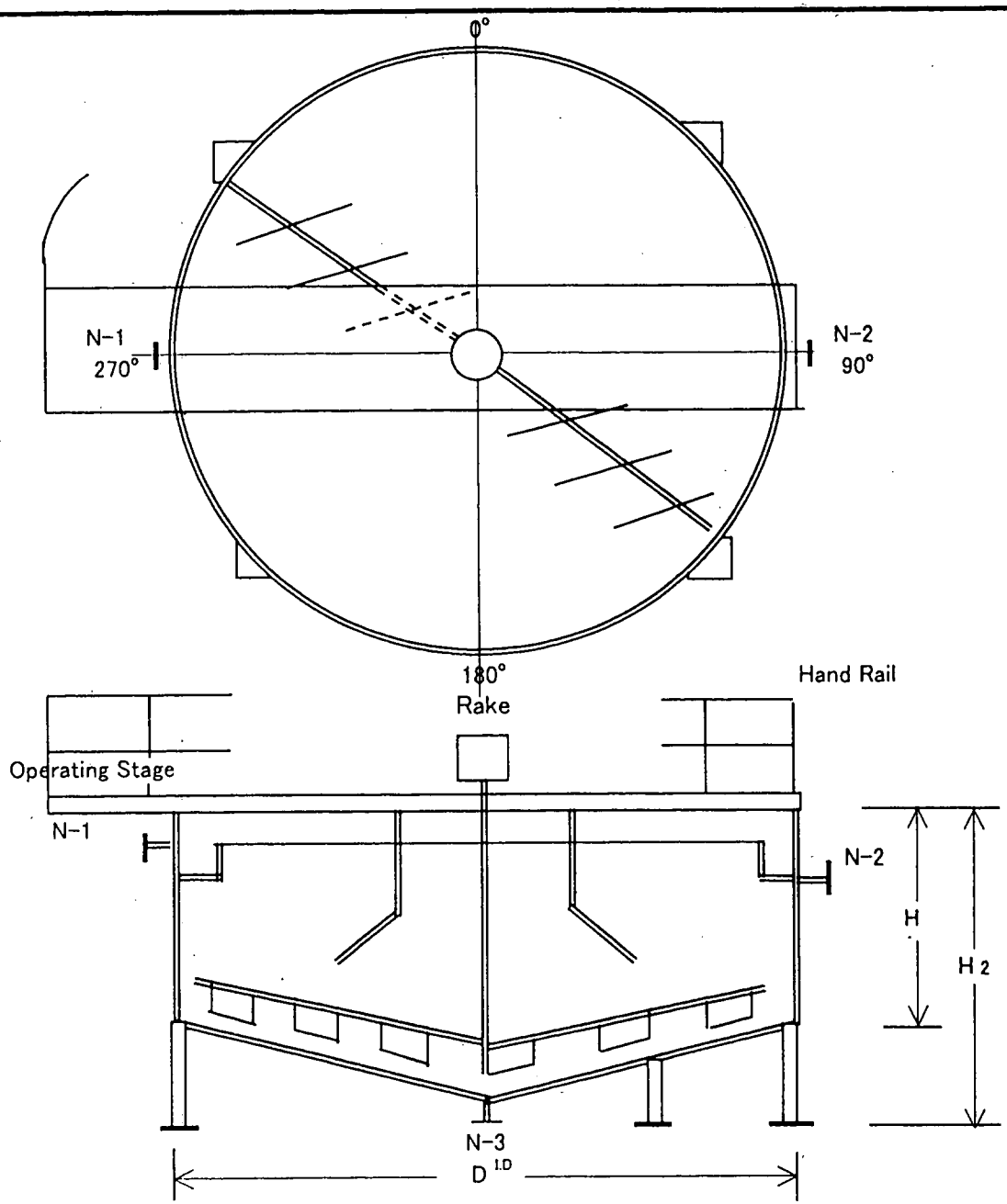

Materials: Carbon Steel/Epoxy coating
Accessories: Sludge Collection Rake
Operating Stage
Stairway

Nozzle No	Name	Size	No	Note
N-4				
N-3	Sludge Outlet		1	
N-2	Treated Water Outlet		1	
N-1	Raw Water inlet		1	

CLIENT	JAPAN INTERNATIONAL COOPERATION AGENCY
TYTLE	FOR: WASTE WATER TREATMENT UNIT STANDARD DRAWING OF _____m^3/h CLARIFIER (MZ-1)
DWG. NO.	STD - CD - 29 - SK01 REV.0

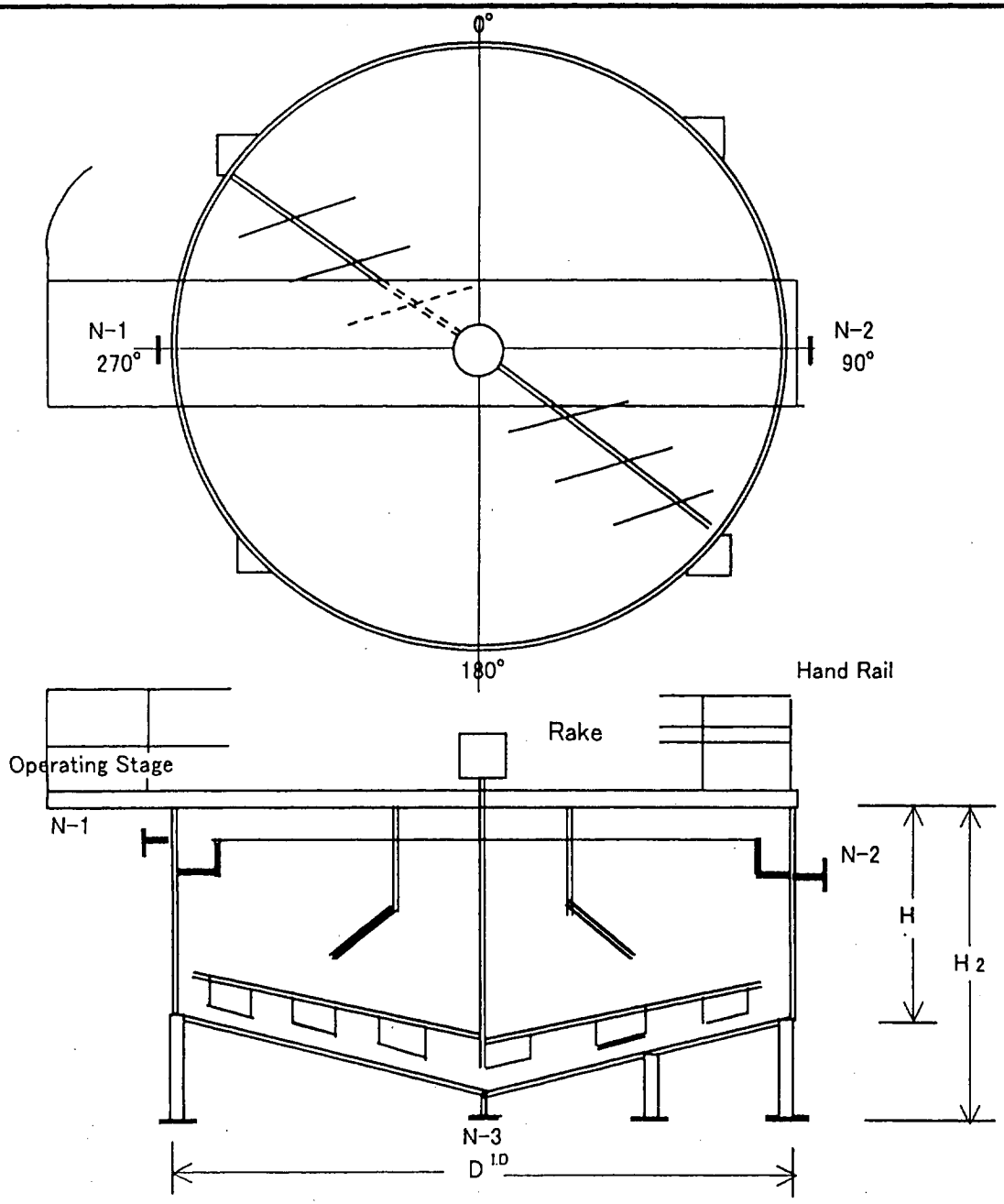

Materials: Carbon Steel/Epoxy coating
Accessories: Sludge Collection Rake
Operating Stage
Stairway

Nozzle No	Name	Size	No	Note
N-4				
N-3	Sludge Outlet		1	
N-2	Treated Water Outlet		1	
N-1	Raw Water inlet		1	

CLIENT	JAPAN INTERNATIONAL COOPERATION AGENCY
TYTLE	FOR: WASTE WATER TREATMENT UNIT STANDARD DRAWING OF _____m^3/h SLUDGE THICKENER (MZ-3)
DWG. NO.	STD - CD - 29 - SK03 REV.0

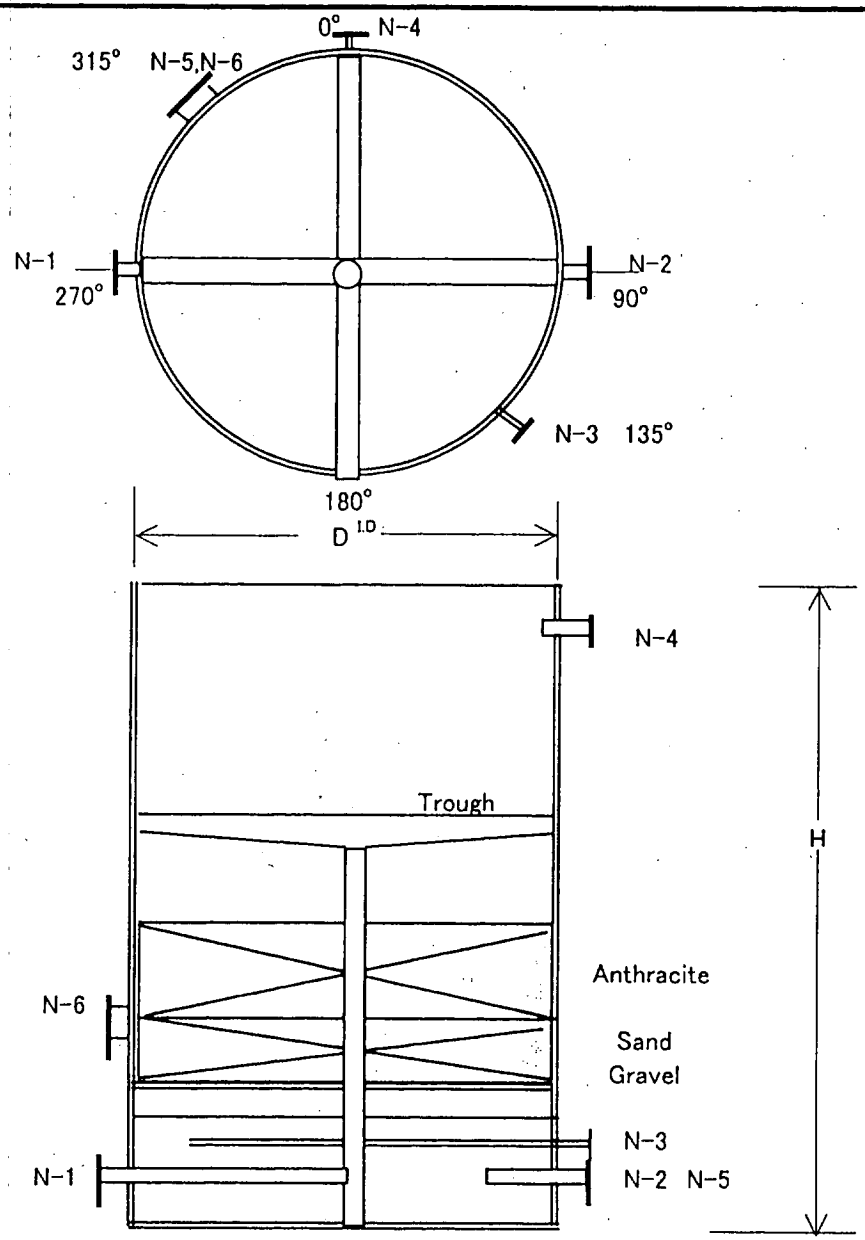

Material: Carbon steel/Epoxy Coating

Filter Media: Anthracite + Sand/Gravel

Accessories: Operating Stage
Ladder

Nozzle No	Name	Size	No	Note
N-6	Handhole	200A	1	
N-5	Manhole	500A	1	
N-4	Over Flow		1	
N-3	Air Inlet		1	
N-2	Filtered Water Outlet/		1	
	Backwash Water Inlet			
N-1	Clarified W.ater inlet/		1	
	Backwash Waste Ouktlet			

CLIENT	JAPAN INTERNATIONAL COOPERATION AGENCY
TYTLE	FOR: WASTE WATER TREATMENT UNIT STANDARD DRAWING OF _____ m^3/h SAND FILTER (F-1) (GRAVITY TYPE)
DWG. NO.	STD - CD - 29 - SK03 REV.0

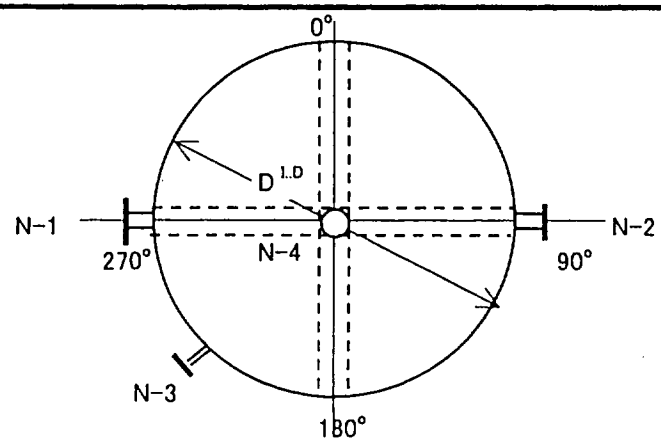

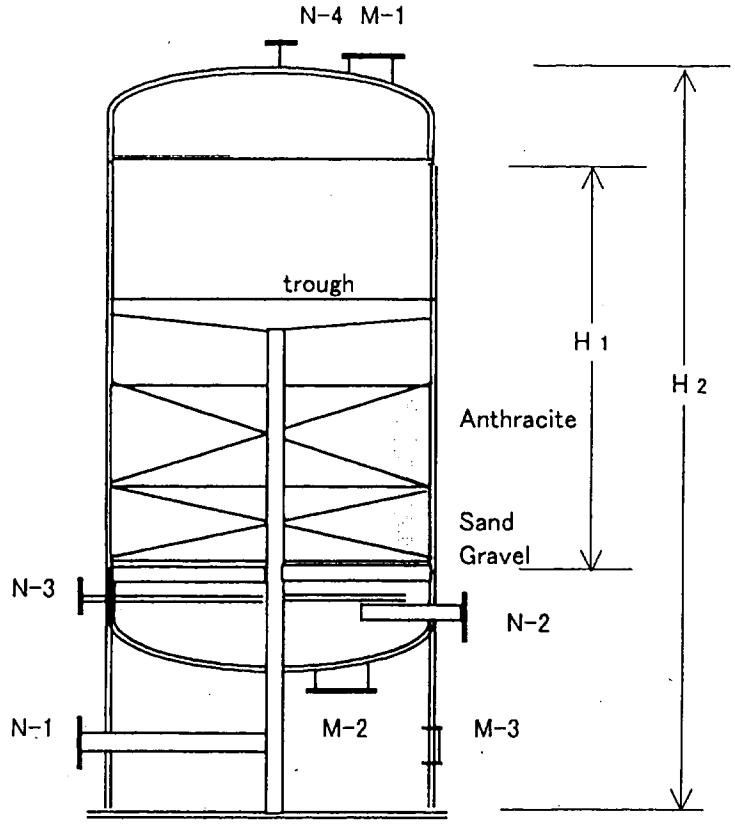

Materials: Carbon Steel/Epoxy Coating

Filter Media: Anthracite + Sand/Gravel

Accesary: Operating Stage
Ladder

Nozzle No	Name	Size	No	Note
M-3	Manhole	500A	1	
M-2	Manhole	500A	1	
M-1	Manhole	500A	1	
N-4	Auto Air Vent		1	
N-3	Air Inlet		1	
N-2	Filtered Water Outlet/		1	
	Backwash Water Inlet		1	
N-1	Clarified W.ater inlet/		1	
	Backwash Waste Ouktlet		1	

CLIENT	JAPAN INTERNATIONAL COOPERATION AGENCY
TYTLE	FOR: WASTE WATER TREATMENT UNIT STANDARD DRAWING OF _____ m^3/h SAND FILTER (F-1) (PRESSURE TYPE)
DWG. NO.	STD - CD - 29 - SK04 REV.0

顧客名:　　国際協力事業団 (JICA)

プロジェクト名: エジプト国工業廃水対策調査

工場名:　　EGYPTIAN IRON AND STEEL CO.

基本設計
(ORIGINAL)

タイトル:　　デモンストレーションプラント

設計検討書

年 月:　　2000年　9月

コンサルタント:　　国際協力事業団調査団

千代田デイムス・アンド・ムーア株式会社

千代田化工建設株式会社

1．目的

本検討書は、Egyptian Iron and Steel Co. （EIS）に建設予定である冷延・酸洗設備からの酸性廃水を処理するデモンストレーション用廃水処理設備（W.W.T.）の基本設計において行った検討事項について述べるものである。

しかし、作成した基本設計図書類に基づき算出した建設費が日本側予算を大幅に超過することが明らかとなったため調査団とエジプト国側と協議し、デモンストレーションプラントは建設しないことになった。

2．デモンストレーションプラント

（1）工場の選定

・デモンストレーション用の廃水処理設備として基本設計を実施する候補の工場は、1999年10月5日の会議でEIS工場を含め3工場が選出された。

・デモンストレーション工場の選定基準は、事前調査打合せ簿（M/M on June 2.1999）に記載されている。

1）工場の廃水処理対策を早急に実施する必要のある工場

2）廃水処理設備が代表的な処理システムにより構成されるもので、エジプト全国の工場に広く普及が期待できる工場

3）廃水処理設備の設計・建設・運転管理に積極的である工場

4）廃水処理設備建設の財源が、自己調達可能か、または他からの融資により確保できる工場

5）現在、他のドナーが関与している廃水処理対策プロジェクトが進行中でない工場

・基本設計を実施した代表3工場の中からJICA調査団とエジプト国側の協議の結果、デモンストレーションプラントを建設する1工場を決定する。

（2）デモンストレーション廃水処理システム

工場廃水処理デモンストレーションシステム（以下、システム）は、下記要件を満足するものである。

1）「システム」は適切な技術水準のものであって、エジプト全国へ広く普及が可能であること。

2）「システム」からなる廃水処理設備は、維持管理が容易で低コストで運転できるものであること。

3）「システム」は、必ずしも工場の全廃水を処理するものである必要はない。

3．基本設計

1次調査で実施した工場廃水調査の結果に基づき実施した概念設計を基に、2次調査で

実施した追加工場廃水調査の結果を参考にして基本設計を行った。
主な作成図書類は次の通り。

(1)プロセスフローシート（PFD）
(2)エンジニアリング･フロー･ダイアグラム（EFD）
(3)配置図
(4)主要装置の外形図
(5)単線結線図
(6)機器リスト、計器リスト、電動機リスト
(7)建設費、維持管理費など

4．廃水系統の現況

EIS 工場の主な廃水系統を、添付図－1に示す。
廃水のほとんどは循環再利用されており、一部の廃水は近くの砂漠へ排出されている。

5．設計条件

5.1 処理対象廃水

処理対象廃水は、一次調査において EIS 工場側から工場廃水のなかから緊急対策の要望があった冷延設備（Cold Rolling Mill Facility）の酸洗設備（Pickling Plant）から排出される次の廃水とする。

・酸性洗浄廃水（Acid Wash Water）
・廃酸（Waste Acid）

［注］概念設計においては、EIS 工場側の説明では「廃酸は緊急時以外排出されることはない」との説明であった。しかし、基本設計の段階で「酸洗設備が定常運転されると、廃酸回収設備の能力不足のため、一定量の廃酸は中和設備に送り中和処理し放流している」との説明を受けたため、処理対象に加えたものである。

5.2 処理対象廃水の水量、水質

処理対象とする酸性洗浄水、廃硫酸の流量、水質は表－1の通り。廃水量については、EIS 工場から入手したデータである。水質については、EIS 工場提供のデータを参考に現地調査結果により設定した。

表－1　処理廃水の設計流量、水質

項　　目	酸性洗浄水	廃硫酸液
流 量	平均　150 [m^3/h] 最大　170 [m^3/h]	最大　40 [m^3/d] 1.7 [m^3/h]
硫酸濃度 [%]	0.25	12
硫酸鉄($FeSO_4$) [%]	0.35	18

5.3　処理目標

処理後の水質は、エジプトの排水基準 Law 48/82 Underground Reservoir & Nile Branches / Canals を満足するものとする。ただし、溶解性固形分（TDS）は対象外とする（表－2参照）。

表－2　　処理水の目標水質

項　目	混合廃水	放流基準 Law 48/82
pH　[・]	0.5－2	6－9
BOD　[mg/L]		20
COD　[mg/L]		30
TSS　[mg/L]	100	30
油分　[mg/L]	＜5	5
溶解性固形分 [mg/L]	－	2,000
水温　[℃]		35

5.4　前提条件

（1）廃水流量

1）酸性洗浄水

工場廃水調査において、酸性洗浄水、廃硫酸液の現地測定ができなかったため、EIS 工場側から与えられた流量（150m^3/h）を用いて設計した。

2）廃硫酸

硫酸濃度が非常に高いので 40m^3/day を貯槽に溜め、一定量（1.7m^3/h）ずつ排出、処理する。流量は EIS 工場から与えられた流量である。

（2）廃水の濃度

工場廃水調査において、EIS 工場側から与えられた酸性洗浄水の硫酸濃度は最大 12%であった。これに対して、廃硫酸回収設備での物質収支の計算結果（廃水流量と CaO 消費量）から推算すると、酸性洗浄水の H_2SO_4 濃度は、最大でも 1.2%である（廃水量 150m^3/h として）。また、調査団が実施した廃水調査では、TIMS の分析結果によれば、酸性洗浄水の H_2SO_4 濃度は 0.24%であった。

このことから、酸性洗浄水の設計 H_2SO_4 濃度は、0.25%として計算する。

硫酸鉄（$FeSO_4$）濃度は、実測値とそれほど差がなかったので、EIS 工場から与えられた数値を採用した。

（3）既設設備の利用

既設の酸性洗浄水、廃硫酸液の配管、廃水タンク（30m^3 x 2 基）および中和廃水送水ポンプが利用可能であるものとし、これらの設備を使って新設の廃水処理設備へ送水するものとする。

（4）既設設備の整備、補修、運転

上記の転用する設備はもちろん、廃水に係わるすべての装置は，初期の設計通り、または改善後の設計通り整備、補修され、正しく運転・維持管理されるものとする。

6．システム設計

6.1 廃水処理システムフロー

デモンストレーション用廃水処理設備は、下記の処理装置からなる。

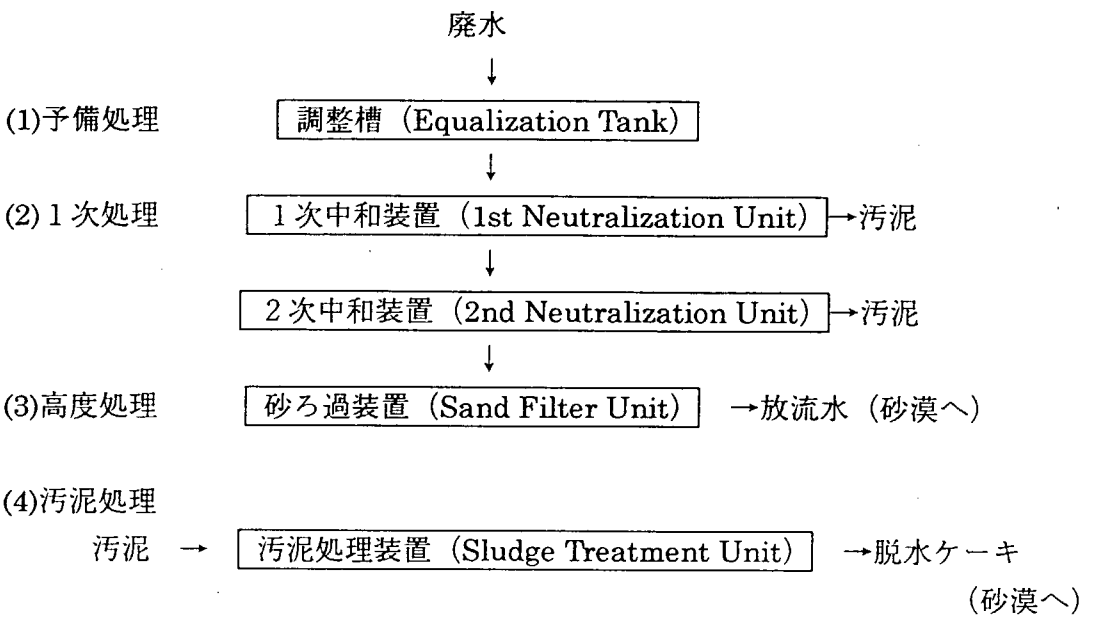

図－1　廃水処理システムフロー

6.2 処理装置の説明

（1）調整槽

1）機能

流量、水質が大きく異なる酸性洗浄水と廃硫酸液を混合して処理するため、いったん大きなタンクに貯留し、水質の均一化を図り一定量ずつ処理する。

均一化を促進するため槽底から空気を吹込んで撹拌する。

2）仕様、設計基準など

(a)円筒竪型、上部開放の鋼板製貯槽とし、地上に設置する。

材質については、鋼板、鉄筋コンクリート（いっずれも接液部は防食施工）やFRP、不銹鋼（ステンレス、チタン）などがあるが、工場プレファブ加工が可能である、現場での加工が容易、経済的であるなどの点から、鋼板を用いた（以下、鋼板製水槽は同じ理由)。また、コスト削減のため屋根は設けない。

(b)貯槽の内面は、樹脂ライニングとする。

(c)調整槽の容量は工場廃水では標準的な滞留時間からとに、6時間容量とする。

(d)付属品として、空気吹込み装置（ブロア、散気装置）を設ける。

3）調整槽の必要性

1）機能の項で述べた通り。

（2）一次中和装置

1）機能

水質が平均化された廃水を一次中和槽へ送り、石灰（CaO）を添加・撹拌し、pH3-4になるように調整する。この中和反応により廃水中の硫酸（H_2SO_4）は中和されて石膏（$CaSO_4 \cdot 2H_2O$）を析出するので、これを沈殿槽で沈殿分離する。

一次中和における化学反応式は下記の通り。

$$H_2SO_4 + Ca(OH)_2 \rightarrow CaSO_4 \cdot 2H_2O \downarrow \quad \text{------} \quad (1)$$

沈殿槽の上澄水には、石膏が約 2,000 mg/l（石膏の飽和溶解度が約 2,000mg/l である）含まれている。

2）仕様、設計基準など

(a) 1 次中和槽

・円筒形鋼板製（屋根なし）のタンクとし、地上に設置する。

・槽内面は耐酸樹脂ライニングを行う。

・槽の容量は十分な一次反応が行われる滞留時間とし、1 時間容量とする。

・竪型の撹拌機により撹拌する。

(b)石灰注入装置

・中和剤は、既設の設備で使用されている石灰（CaO）を使用する。
アルカリ剤としては苛性ソーダ（NaOH）、消石灰（$Ca(OH)_2$）、炭酸ソーダ（Na_2CO_3）などがあるが、取扱い易さ、経済性、中和効果、安全性の点と現在既設の中和設備で使用していることから生石灰（CaO）を使用する。

・人力投入により石灰タンクに石灰乳をつくり、ポンプで注入する。

・pH の調整は、pH 計で pH を検知し石灰乳の注入量を自動調節して行う。

(c) 1 次沈殿池

・円形鉄筋コンクリート槽、地上設置とする。

・内面は耐酸モルタル仕上げとする。

・ブリッジを渡し中央駆動式汚泥掻寄機を懸垂設置する。

・表面負荷は、一次中和で生じる石膏スラリーの沈降試験結果に安全性考慮して、約 $1.5 m^3/m^2/h$ とする。

3）一次中和装置を必要とする理由

pH3-4 で大量の石膏が析出されるので、石灰を加えて反応させる中和槽、生成した石膏を沈殿させる沈殿槽からなる装置を設置する。

（3）二次中和装置

1）機能

一次中和処理沈殿槽の上澄液を二次中和槽へ送り、さらにCaOを添加・撹拌してpH8.5－9になるように調整する。さらに槽底から空気を吹き込み酸化する。

この反応で硫酸鉄（$FeSO_4$）は$Fe_2(SO_4)_3$となり、酸化されて$Fe(OH)_3$を生成し、沈殿槽内で沈殿分離される。また、廃水中の硫酸は中和されて石膏（$CaSO_4 \cdot 2H_2O$）となり沈殿する。二次中和における化学反応式は次の通り。

$$FeSO_4 + 5H_2O + 1/2\ O_2 \rightarrow Fe(OH)_3 \downarrow + H_2SO_4 \quad \text{------} \quad (2)$$

$$Fe(OH)_3 + H_2SO_4 + Ca(OH)_2 \rightarrow Fe(OH)_3 + CaSO_4 \cdot 2H_2O + H_2O \quad \text{------} \quad (3)$$

2）仕様、設計条件など

(a)二次中和槽

・円形竪型鋼板製（屋根なし）のタンクとし、地上に設置する。

・槽内面は耐酸樹脂ライニングを行う。

・付属設備として、空気撹拌装置（ブロア、散気装置）を設置する。

・槽容量は、二次中和反応と空気酸化反応を完了させるに十分な滞留時間、2時間容量とする。

・pHの調整は、pH計でpHを検知し石灰乳の注入量を自動調節して行う。

(b)二次沈殿池

・円形鉄筋コンクリート槽とし、地上に設置する。

・槽内面は、耐酸モルタル施工とする。

・ブリッジを組み、中央駆動式汚泥掻寄機を懸垂する。

・表面負荷は、二次中和・酸化反応で生成するスラリーの沈降試験結果を参考に約$24m^3/m^2/day$=約$1.0m^3/m^2/h$とする。

3）二次中和装置を必要とする理由

一次中和（pH3－4）において廃水中の硫酸は添加された石灰と反応し石膏になって除去されるが、まだ硫酸鉄、硫酸が残存する。これを除くため更に石灰を加え二次中和（pH8.5－9）、空気酸化した後、沈殿分離する二次中和装置が必要となる。

（4）砂ろ過装置

1）機能

二次沈殿池の上澄水に含まれる微量の浮遊物（SS）を除去するために、砂、アンスラサイト（無煙炭）を充填した重力式急速ろ過器を設ける。

目詰りを起したろ材は、空気と水を下から送り洗浄する。

逆洗廃水は、調整槽に戻し再処理する。

2）仕様、設計条件

・重力式ろ過器とする。

・円筒竪型、開放式とし、鋼板製（内面タールエポキシ塗装）とする。

・ろ過器は3基設け、常時2基運転、1基スタンバイとする。
・付属設備として、洗浄用ブロア、ポンプ、水槽（ろ過水槽、逆洗廃水槽、いずれも鉄筋コンクリート製）を設置する。
・ろ材は、粒子径をそろえたアンスラサイト（無煙炭）＋砂とする。
粒径の大きい（比重が小さい）アンスラサイトを上層に、粒径の小さな（比重が大きい）砂を下層にした2層ろ過は、ろ層表面の目詰りが少なく「ろ過速度を速く、ろ過継続時間を長くすることができる」ため優れている。
・ろ過速度は、工場廃水処理で凝集（中和）沈殿後の処理水のろ過として標準的な約 $180m^3/m^2/day=7.5m^3/m^2/h$ とする。
・ろ材の洗浄間隔は24時間（1日1回の洗浄）を標準と、シーケンスタイマアーにより自動洗浄する。
ろ材の目詰りが早く、ろ材上の水位が上昇した場合は、液面計で水位を検知し洗浄を開始する。

3）ろ過装置を必要とする理由
微量のSSを除去し、水質改善を行うことと、2次沈殿池から計画値以上の浮遊物がキャリーオーバーした時のガードとして、もっとも一般的な急速ろ過装置を設置する。

（5）汚泥処理設備
(5-1) 石膏処理
［No.1 遠心分離機］
1）機能
一次中和沈殿槽の槽底に沈殿したスラッジ（主として石膏）は、比較的SS濃度が高いので直接、遠心脱水機で固形化する。ろ液は調整槽に戻し、再処理する。
脱水ケーキは副産物の石膏として回収し、建築材料、土壌改良材などに利用する。
2）仕様、設計基準など
・遠心分離機は、円筒横型スクリューデカンターとし、ステンレス製、1台とする。
・運転は、昼間だけの運転として1日12時間運転とする。
・SS濃度は、次の通り（経験による概略値）。
　・給泥：　50 kg-SS/m^3
　・脱水ケーキ：600 kg-SS/m^3
3）遠心分離機を選定した理由
脱水機には、遠心分離機の他にフィルタアープレス、真空ろ過機、ベルトフィルター、スクリーンフィルターなどがある。
遠心分離機（スクリューデカンター）は、装置がコンパクトで運転が容易であり、かつ経済的で、汎用性が高いところから、これを選定した。

(5-2) 汚泥処理
2次中和沈殿槽の槽底に沈殿したスラッジ（主として水酸化鉄）は、固形物の濃度が薄

いため（0.5－3%）シックナーで濃縮した後、遠心脱水機で減容・固形化し、管理下にある砂漠の一角へ搬出、投棄する。

［スラッジシックナー］

1）機能

遠心脱水機による脱水固形化する前処理としてSSの濃縮を行う。上澄水は、調整槽に戻し再処理する。

2）仕様、設計基準など

・シックナーは円形竪型、鋼板製、１基を地上に設置する。

・槽内面は耐酸タールエポキシ塗装を施す。

・ブリッジを設け中央駆動集泥機を懸垂設置する。

・SS濃度は、次の通り（経験による概略値）。

・給泥：　30 kg-SS/m^3

・排泥：　50 kg-SS/m^3

3）必要とする理由

SS濃度の低い汚泥では、遠心脱水の効率がよくない（含水率が大きい、ろ液の清澄度がよくない）ため、脱水機の前処理として、もっとも簡便で広く用いられている自然沈降濃縮槽（シックナー）を設置する。

［No.2遠心分離機］

1）機能

シックナーにより濃縮された汚泥を遠心脱水機により固液分離する。脱水性、ろ液の清澄度をよくするため、汚泥に凝集剤を添加し脱水する。ろ液は調整槽に戻し、再処理する。脱水ケーキはダンプカーで構外搬出し、管理下にある砂漠の一角へ投棄・処分する。

2）仕様、設計基準など

・遠心分離機は、円筒横型スクリューデカンターとし、ステンレス製、２台とする。

・運転は、昼間だけとし・１日１２時間ｘ２台運転、または１日フル運転・２４時間ｘ１台＋１台予備とする。

・１台は石膏処理（一次中和汚泥）用遠心分離機の予備を兼ねるものとする。

・SS濃度は、次の通り（経験による概略値）。

・給泥：　50 kg-SS/m^3

・脱水ケーキ：200 kg-SS/m^3

・薬注設備：タンク、撹拌機、定量ポンプ

・凝集剤：　ポリマー（カチオン系またはアニオン系）

廃水中に含まれている硫酸鉄が凝集剤として働いており、さらに凝集を促進するためには高分子凝集剤が効果的である。カイロ市内でも入手可能である。

3）遠心分離機を選定した理由

No.1遠心分離機に同じ。また、同機種を選定することで石膏処理、スラッジ処理の共

通予備を持ち台数を削減した。

（6）電気計装設備設計

1）電気設備

(a)既設電気室（Substation）スイッチギアから1次電源（380V-AC x 3相 x 50HZ）を取出し、廃水処理設備計器室内の電気室に設ける受配電盤、変圧器まで配線する。

(b)各機器などのモーターへは、配電盤からMCC（Motor Control Center）を経由して動力ケーブル（380V-AC）を配線する（単線結線図参照）。

(c)照明器具などは、変圧器を通して220V-ACケーブルを配線する。

(d)電動機の電源は、　380Vx 3相 x50サイクルとする。

(e)機器類、架台などに、適切な接地を施工する。

(f)一次電源については、廃水処理設備計器室内の電気室まで工場側により設計・施工されるものとする。

2）計装設備

(a)廃水処理設備計器室に中央計器盤を設置し、指示計、記録計、警報計、シーケンスタイマーなどを取付け遠隔操作が可能とする。

(b)計器類へは、変圧器、中央計器盤を経由して制御ケーブル（220V-AC、24V-DC）を配線する。

(c)自動調節弁は計装用圧縮空気で駆動する.

(d)電気機器、計器などは熱帯・防塵仕様とする。

7．基本設計上の配慮指針

7.1 設置場所

（1）廃水処理装置は一部を除いて屋外に設置する。

（2）機器、配管、計器類は、運転操作や保守を考慮して用地、配置を計画する。

（3）廃水処理設備地区は、非危険場所（電気区分）として設計する。

7.2 特記事項

（1）廃水処理設備は、年間330日運転として設計する。

（2）常時運転するポンプには、1台の予備ポンプを設置する。

（3）薬品タンクの容量は、原則として1週間分とする。

（4）廃水処理設備計器室には、計器室（運転員執務室）、電気室、簡易分析室、トイレ、ロッカールーム、工具室などを併設する。

（5）簡易分析室には、下記の分析器などを置く。

1）凝集試験器、生物試験機

2）pHメーター、電気伝導度計、濁度計、水分計など

3）簡易天秤

4）サンプリング容器、ガラス器具など

8．物質収支

（1）固形物収支

処理対象とする酸性廃水は硫酸の濃度が高く、中和反応に大量の石灰を消費する。その結果、大量の石膏、スラッジ（水酸化鉄など）が生成される。物質収支の検討は、次の3ケースについて行った。

表－3　検討したケース

項　目	酸性洗浄水		廃硫酸液	
	流　量 [m^3/h]	H_2SO_4濃度 [％]	流　量 [m^3/d]	H_2SO_4濃度 [％]
ケース1（Base Case）	150	0.25	40	12
ケース2	150	1.2	40	12
ケース3	150	0.25	0	

Base Case における物質収支について計算し、以下に示す。

1）一次中和

(1)式に示された反応式参照。

(a)廃水中に 575kg/h の硫酸（H_2SO_4）が含まれており、これを中和するのに石灰（CaO）329kg/h を添加する。

(b)その結果、706kg/h の石膏（$CaSO_4 \cdot 2H_2O$）が生成される。

2）二次中和

(2)、(3)式に示された反応式参照。

(a)廃水中の硫酸鉄 825kg/h を空気酸化することで、580kg/h の水酸化鉄が生成される。また、この反応で 522kg/h の硫酸が生成される。

(b)この硫酸を中和するために、さらに 305kg/h の石灰を加える。その結果、935kg/h の石膏が生成される。

(c)廃水中に 100mg/L の固形物（SS）が含まれているものと仮定すると、15.2kg/h のスラッジが生成する。

一次中和、二次中和に消費される石灰の量は、合計 633kg/h=15.2 トン/日である。

以上の計算結果をまとめ、表－4 に示す。

表－4　石膏、スラッジの生成量

項　目	石膏、汚泥の生成量	
	1時間当たり [kg-dry/h]	1日当たり [kg-dry/d]
一次中和：石膏	706	16,945
二次中和	1,531	36,735
(1)　石膏	935.05	22,441
(2)　水酸化鉄	580.39	13,929
(3)　その他の汚泥	15.17	364
合　計	2,237	53,680

（2）スラッジ容量

以上の計算では、固形物重量バランスで計算したが、実際には多量の水分を含んだスラッジとして生成される。それぞれの固形分濃度は次の通り。

- 石膏スラッジ：　600kg-SS/m^3-廃水
- その他のスラッジ：　200kg-SS/m^3-廃水

このSS濃度で計算すると、1日の石膏・スラッジ生成量は212m^3となる。

・1次中和＝16,945kg/d / 600kg/m^3＝28.24m^3

・2次中和＝36,735kg/d / 200kg/m^3＝183.68m^3

合計　211.92m^3

（3）システムの物質収支

廃水処理システム全体の物質収支を行うにあたり、それぞれのスラッジの固形物濃度を、これまでの経験から表－5に示す値を用いた。

表－5　スラッジの固形物濃度

	固形物濃度 [kg-dry/m^3-廃水]	備　考
1次中和沈殿槽引抜きスラッジ	50	
1次中和脱水石膏	600	
引抜きスラッジの返送率		引抜き汚泥の30%
2次中和沈殿槽引抜きスラッジ	20	
シックナー槽底引抜きスラッジ	50	
同上汚泥脱水スラッジケーキ	200	

9．検討事項

9.1　石膏・スラッジの処分

（1）石膏の有効利用

一次中和で1日約28m^3の石膏が生成するが、廃水には多量の鉄分が含まれているため一

次中和の過程でいくらか水酸化鉄など不純物が含まれるものと思われる（純度は詳しい分析を行っていないので明言はできない)。石膏の用途は広く、成分の純度が要求されない分野での再利用が期待される。例えば、建築資材の石膏ボード、土壌改良材など。

（2）その他のスラッジの処分

ケース1［酸性洗浄水（150m^3/h、0.25% H_2SO_4）＋廃硫酸（40m^3/d、12% H_2SO_4）では、2次中和沈殿槽で生成するスラッジは濃縮、脱水後でも1日約180m^{3}の脱水ケーキが発生する。これらを処分（管理下の砂漠に投棄を予定）するために多額の費用を必要とし、場所の確保も必要になる。

1）従って、出てきた廃水を処理する前に、「廃水の発生量の削減」「廃水中の硫酸濃度の減少」について、まず検討し、対策をたて削減努力することが必要である。

2）二次中和のスラッジの固形物濃度は濃縮、脱水後でも、200kg/m^3（含水率80%）で8割が水であることから、脱水率の向上を図ることも重要である。

3）脱水後の脱水ケーキは、ダンプトラックで搬出し、現在、中和廃水が排出されている砂漠の一隅へ投棄する。現在、排出した中和廃水の地下水への滲出が問題になっているようだが、脱水ケーキにして投棄した場合、ほとんど降雨がない砂漠では、その懸念はないと思われる。

4）しかし、砂漠とはいえ降雨が0ではないことから浸透の可能性はゼロではないので、万一の場合を考え、滲出水の有無、滲出水があった場合は水質について、定期的なモニタリングを行うことが望ましい。

5）また、処理対象の廃水には鉄以外の重金属は含まれていないはずである。仮に含まれていた場合は、廃水をpH8.5－9で中和するため、重金属は水酸化物になってスラッジに含まれることになる。これは酸性水でない限り溶出することはない。

9.2　放流基準

（1）放流水の溶解性固形分の問題

1）エジプト国の廃水放流規制（Wastewater Discharge Regulation in Egypt）によると、規制項目として溶解性固形分（TDS: Total Dissolved Solids）があり、800～1,200mg/lが規制されている。前記3．（2）で述べたように、廃水中の硫酸（H_2SO_4）を石灰（CaO）で中和する工程で石膏（$CaSO_4$）が析出するが、廃水中にはなお飽和状態の石膏が存在している。石膏の飽和溶解度は約2,000mg/lであることから、廃水中にはそれ以上の溶解性物質が存在することになる。従って、TDSの放流規制値を満足した廃水を放流しようとすると、大量の淡水で希釈・放流するか、さもなければ溶解性物質を除去（＝脱塩）する装置の設置が必要になる。

2）脱塩装置には、逆浸透装置、電気透析、多重効用管蒸発装置などあるが、いずれも高価であること、濃縮液として更に高濃度の塩類が生成されることなどの理由で、今回のデモンストレーションプラントでは考えず、溶解性固形物の規制値は対象外とする。

3）この問題はEIS工場に限った問題ではなく、酸性・アルカリ性廃水の発生する工場、

高圧蒸気を発生するためのボイラ水供給用純水装置の中和廃液が発生する工場などで同様な高塩分濃度（TDS）の廃水が排出されているはずで、このTDSの放流規制を満足することは難しい問題である.

10. 実施設計について

本調査では、短期間の廃水水質調査の結果を基に工場側から提供されたデータを参考にして設計条件を設定し、酸洗廃水中和設備の基本設計を実施したものである。この設計手法は、将来の廃水処理設備設計の参考になるであろう。
将来、酸洗設備および付帯設備などの生産工程、運転管理の改善等により、排出される廃水の水量および性状が変化する可能性が大きいので、実際に酸洗廃水中和設備を建設する際には、ここで記載された基本設計の結果をそのまま用いることは不適切である。すなわち、十分な補足工場廃水調査を実施して適切な設計条件の検証、設定を行い、そのデータに基づいて所定の性能が確保できる廃水処理設備の詳細設計、実施設計を行うことが不可欠である。

よって、本調査で実施した基本設計に基づいて酸洗廃水中和処理設備の建設が行われた場合、日本側はその廃水処理設備の性能について保証するものではない。

Case 1 Base Case

Acid Wash Water	for Solids	Hydraulics
Q(m^3/h)	150	170
H_2SO_4(kg/m^3)	2.5	
$FeSO_4$(kg/m^3)	3.5	

Waste Acid	
Q(m^3/h)	1.67
H_2SO_4(kg/m^3)	120
$FeSO_4$(kg/m^3)	180

H_2SO_4 loading (kg/h)	575
$FeSO_4$ loading (kg/h)	825

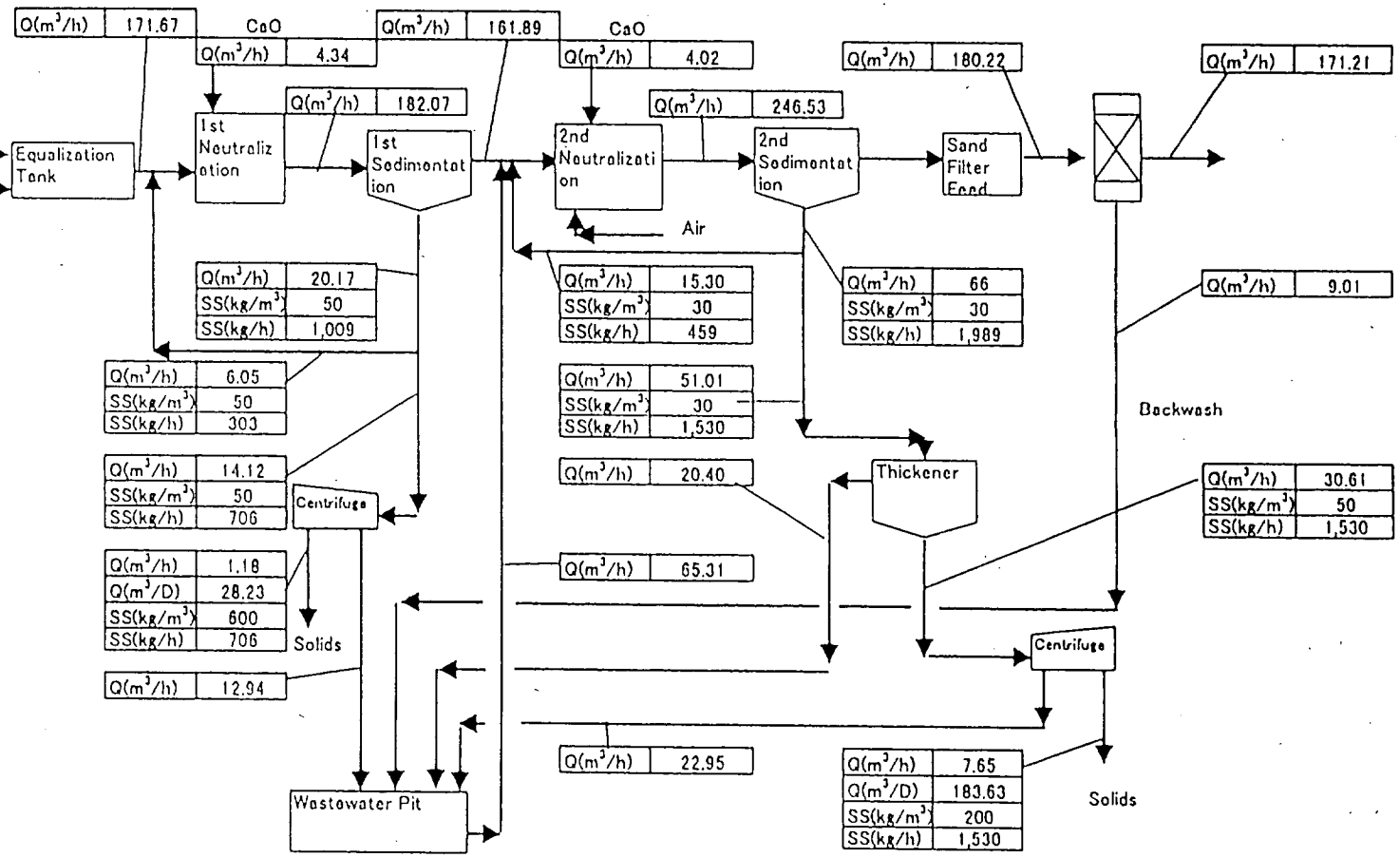

Solids Production Unit

1st stage gypsum

[H_2SO_4 loading] * 1.755 - [2.0 kg/m^3*Qm^3/h]

2nd stage $Fe(OH)_3$

[$FeSO_4$ loading] * 0.704

2nd stage gypsum

[$FeSO_4$ loading] * 1.133

2nd stage others

[0.1 kg/m^3 * Q m^3/h]

Lime Requirement as CaO

1st stage

[H_2SO_4 loading] * 0.572

2nd stage

[$FeSO_4$ loading] * 0.369

Solids Production

1st stage gypsum
706 kg/h

2nd stage $Fe(OH)_3$
580 kg/h

2nd stage gypsum
935 kg/h

2nd stage others
15 kg/h

2nd stage total
1,530 kg/h

Lime Requirement as CaO

1st stage
329 kg/h

2nd stage
305 kg/h

1st + 2nd total
2,236 kg/h
53,666 kg/D

Lime Solution:
10% as $Ca(OH)_2$
= 7.57% as CaO

1st + 2nd total
633 kg/h
15201 kg/D

3,690 kg/1000m^3-wastewater

Molecular weight	
H_2SO_4	98.1
$CaSO_4 \cdot 2H_2O$	172.2
$FeSO_4$	151.9
$Fe_2(SO_4)_3$	399.9
$Fe(OH)_3$	106.9
CaO	56.1
$Ca(OH)_2$	74.1

CHEMICAL REACTION and WATER BALANCE

1st stage Gypsum Poduction

$$H_2SO_4 + Ca(OH)_2 \rightarrow CaSO_4 \cdot 2H_2O \downarrow$$

2nd stage Iron Oxidation and Gypsum Production

$$FeSO_4 + 5H_2O + 1/2O_2 \rightarrow Fe(OH)_3 \downarrow + H_2SO_4$$
$$H_2SO_4 + Ca(OH)_2 \rightarrow CaSO_4 \cdot 2H_2O \downarrow$$

Case 2 H_2SO_4 in Wastewater 1.2%

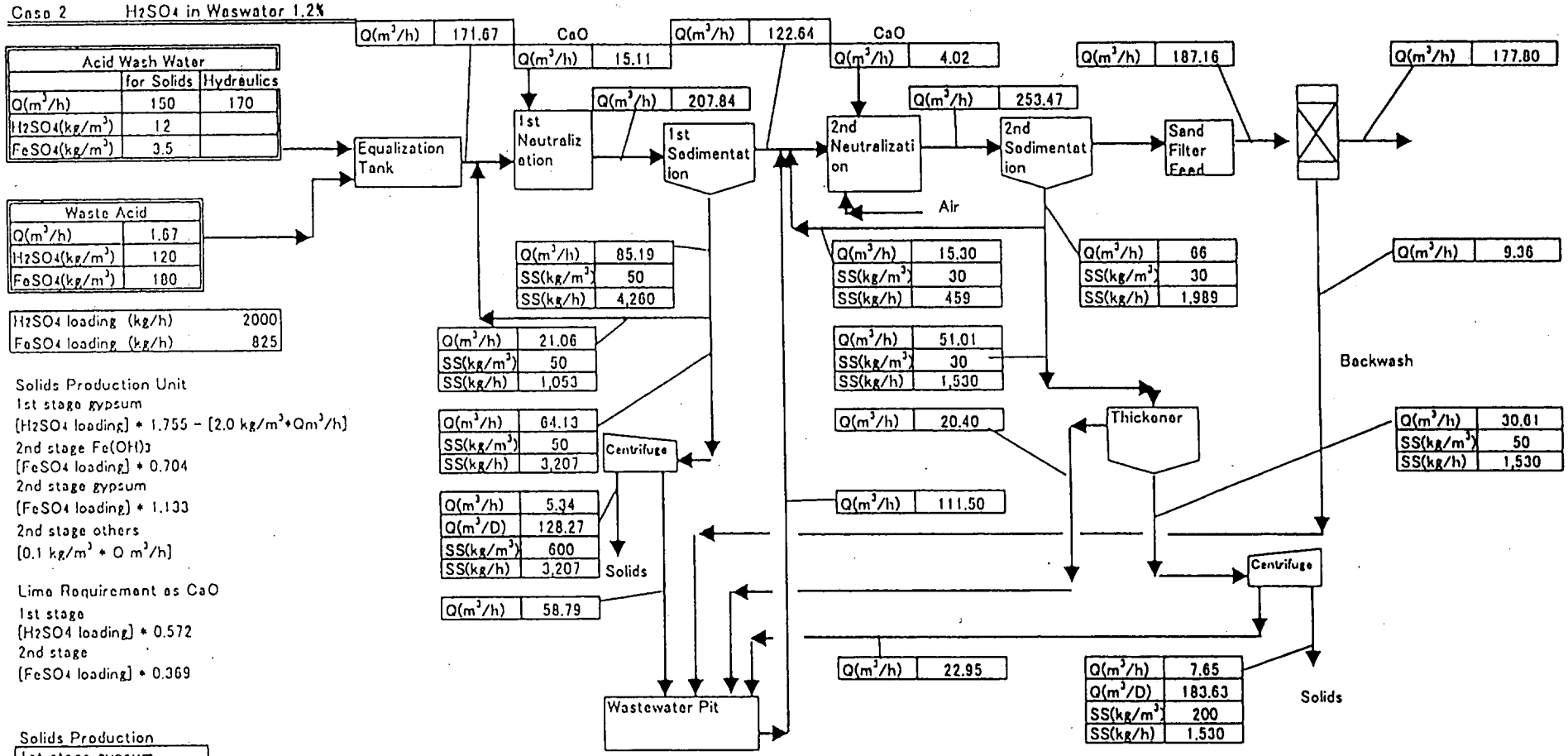

Solids Production Unit

1st stage gypsum

[H_2SO_4 loading] * 1.755 − [2.0 kg/m³*Qm³/h]

2nd stage $Fe(OH)_3$

[$FeSO_4$ loading] * 0.704

2nd stage gypsum

[$FeSO_4$ loading] * 1.133

2nd stage others

[0.1 kg/m³ * Q m³/h]

Lime Requirement as CaO

1st stage

[H_2SO_4 loading] * 0.572

2nd stage

[$FeSO_4$ loading] * 0.369

Solids Production

1st stage gypsum
3,207 kg/h

2nd stage $Fe(OH)_3$
580 kg/h

2nd stage gypsum
935 kg/h

2nd stage others
15 kg/h

2nd stage total
1,530 kg/h

Lime Requirement as CaO

1st stage
1,144 kg/h

2nd stage
305 kg/h

1st + 2nd total
4,737 kg/h
113,687 kg/D

Lime Solution:
10% as $Ca(OH)_2$
= 7.57% as CaO

1st + 2nd total
1,448 kg/h
34756.6 kg/D
8,436 kg/1000m³-wastewater

Molecular weight	
H_2SO_4	98.1
$CaSO_4 \cdot 2H_2O$	172.2
$FeSO_4$	151.9
$Fe_2(SO_4)_3$	399.9
$Fe(OH)_3$	106.9
CaO	56.1
$Ca(OH)_2$	74.1

CHEMICAL REACTION and WATER BALANCE

1st stage Gypsum Poduction

$$H_2SO_4 + Ca(OH)_2 \rightarrow CaSO_4 \cdot 2H_2O \downarrow$$

2nd stage Iron Oxidation and Gypsum Production

$$FeSO_4 + 5H_2O + 1/2O_2 \rightarrow Fe(OH)_3 \downarrow + H_2SO_4$$

$$H_2SO_4 + Ca(OH)_2 \rightarrow CaSO_4 \cdot 2H_2O \downarrow$$

Case 3 Wash Water Only

Acid Wash Water	for Solids	Hydraulics
Q(m³/h)	150	170
H2SO4(kg/m³)	2.5	
FeSO4(kg/m³)	3.5	

Waste Acid	
Q(m³/h)	0.00
H2SO4(kg/m³)	120
FeSO4(kg/m³)	180

H2SO4 loading (kg/h)	375
FeSO4 loading (kg/h)	525

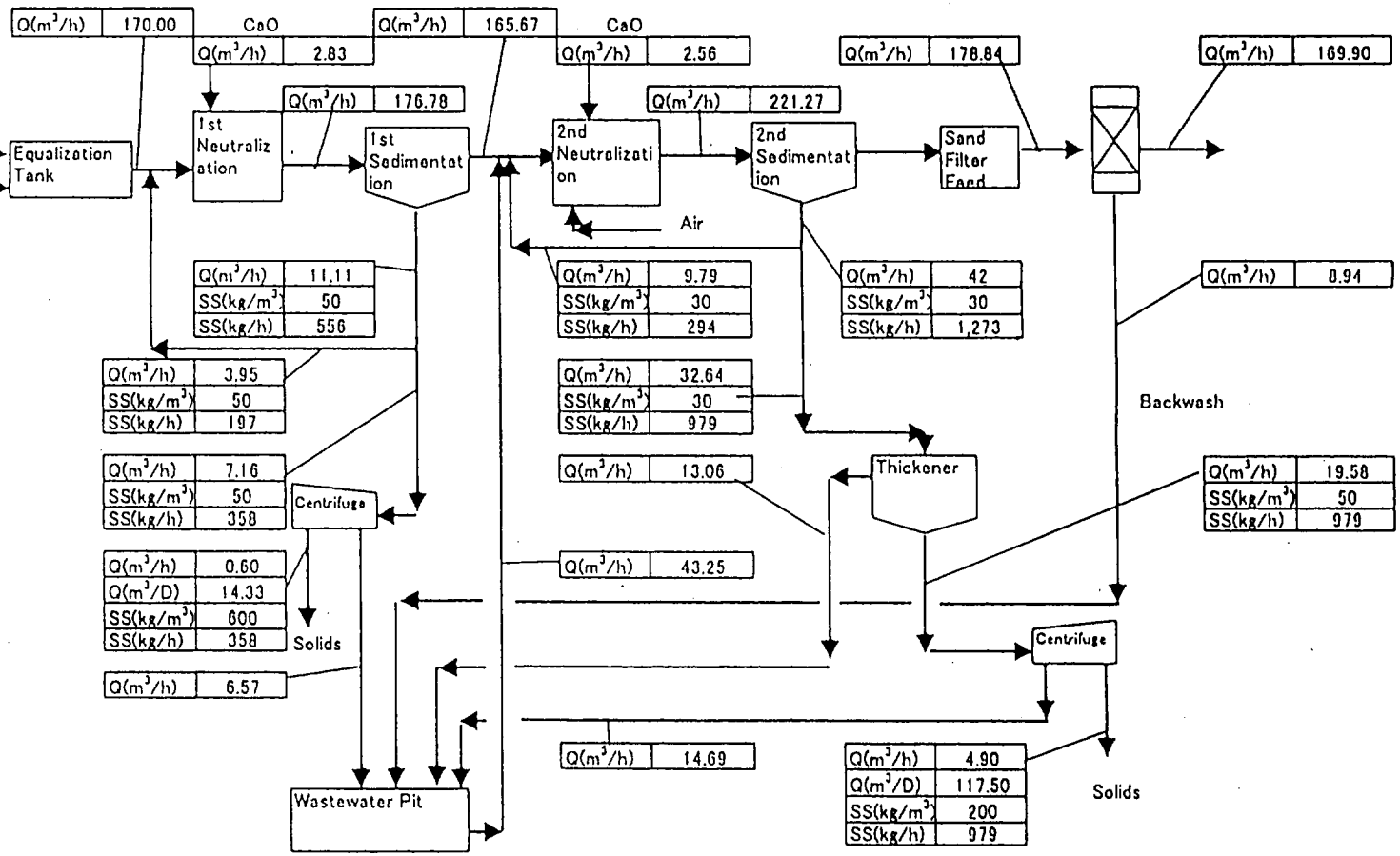

Solids Production Unit

1st stage gypsum

[H2SO4 loading] * 1.755 - [2.0 kg/m³*Qm³/h]

2nd stage Fe(OH)3

[FeSO4 loading] * 0.704

2nd stage gypsum

[FeSO4 loading] * 1.133

2nd stage others

[0.1 kg/m³ * Q m³/h]

Lime Requirement as CaO

1st stage

[H2SO4 loading] * 0.572

2nd stage

[FeSO4 loading] * 0.369

Solids Production

1st stage gypsum
350 kg/h

2nd stage Fe(OH)3
369 kg/h

2nd stage gypsum
595 kg/h

2nd stage others
15 kg/h

2nd stage total
979 kg/h

1st + 2nd total
1,337 kg/h
32,095 kg/D

Lime Requirement as CaO

1st stage
214 kg/h

2nd stage
194 kg/h

Lime Solution:
10% as Ca(OH)2
= 7.57% as CaO

1st + 2nd total
408 kg/h
9798.12 kg/D

2,402 kg/1000m³-wastewater

Molecular weight	
H2SO4	98.1
CaSO4·2H2O	172.2
FeSO4	151.9
Fe2(SO4)3	399.9
Fe(OH)3	106.9
CaO	56.1
Ca(OH)2	74.1

CHEMICAL REACTION and WATER BALANCE

1st stage Gypsum Poduction

$H_2SO_4 + Ca(OH)_2 \rightarrow CaSO_4 \cdot 2H_2O \downarrow$

2nd stage Iron Oxidation and Gypsum Production

$FeSO_4 + 5H_2O + 1/2O_2 \rightarrow Fe(OH)_3 \downarrow + H_2SO_4$

$H_2SO_4 + Ca(OH)_2 \rightarrow CaSO_4 \cdot 2H_2O \downarrow$

JAPAN INTERNATIONAL COOPERATION AGENCY

BASIC DESIGN PACKAGE OF

WASTEWATER TREATMENT DEMONSTRATION PLANT

FOR

EGYPTIAN IRON AND STEEL CO.

February 2000

CHIYODA DAMES AND MOORE CO.

CHIYODA CORPORATION

BDO-18

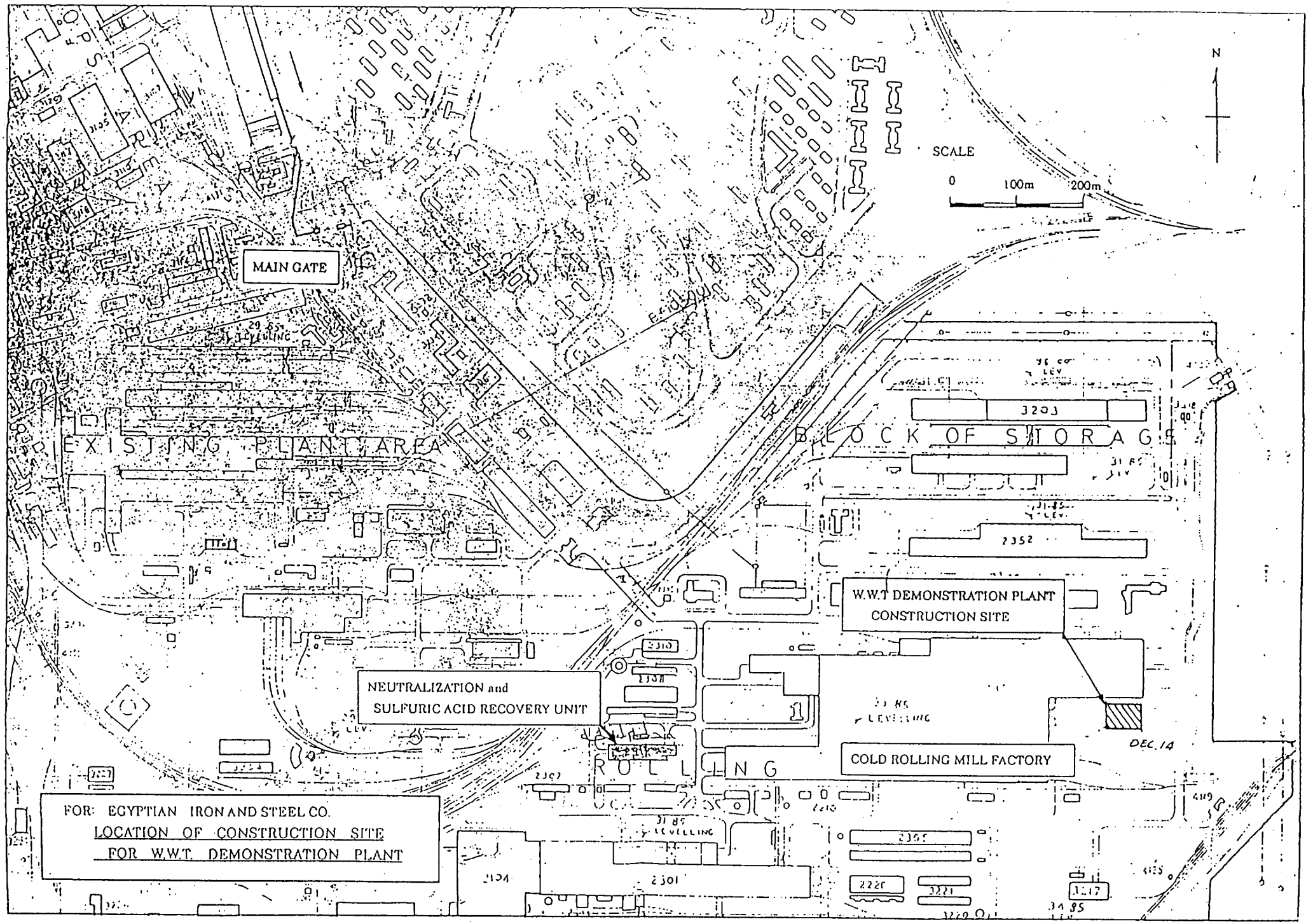
N
SCALE
0
100m
200m
MAIN GATE
EXISTING PLANT AREA
BLOCK OF STORAGE
3203
2352
W.W.T DEMONSTRATION PLANT
CONSTRUCTION SITE
NEUTRALIZATION and
SULFURIC ACID RECOVERY UNIT
COLD ROLLING MILL FACTORY
ROLLING
DEC. 14
FOR: EGYPTIAN IRON AND STEEL CO.
LOCATION OF CONSTRUCTION SITE
FOR W.W.T. DEMONSTRATION PLANT

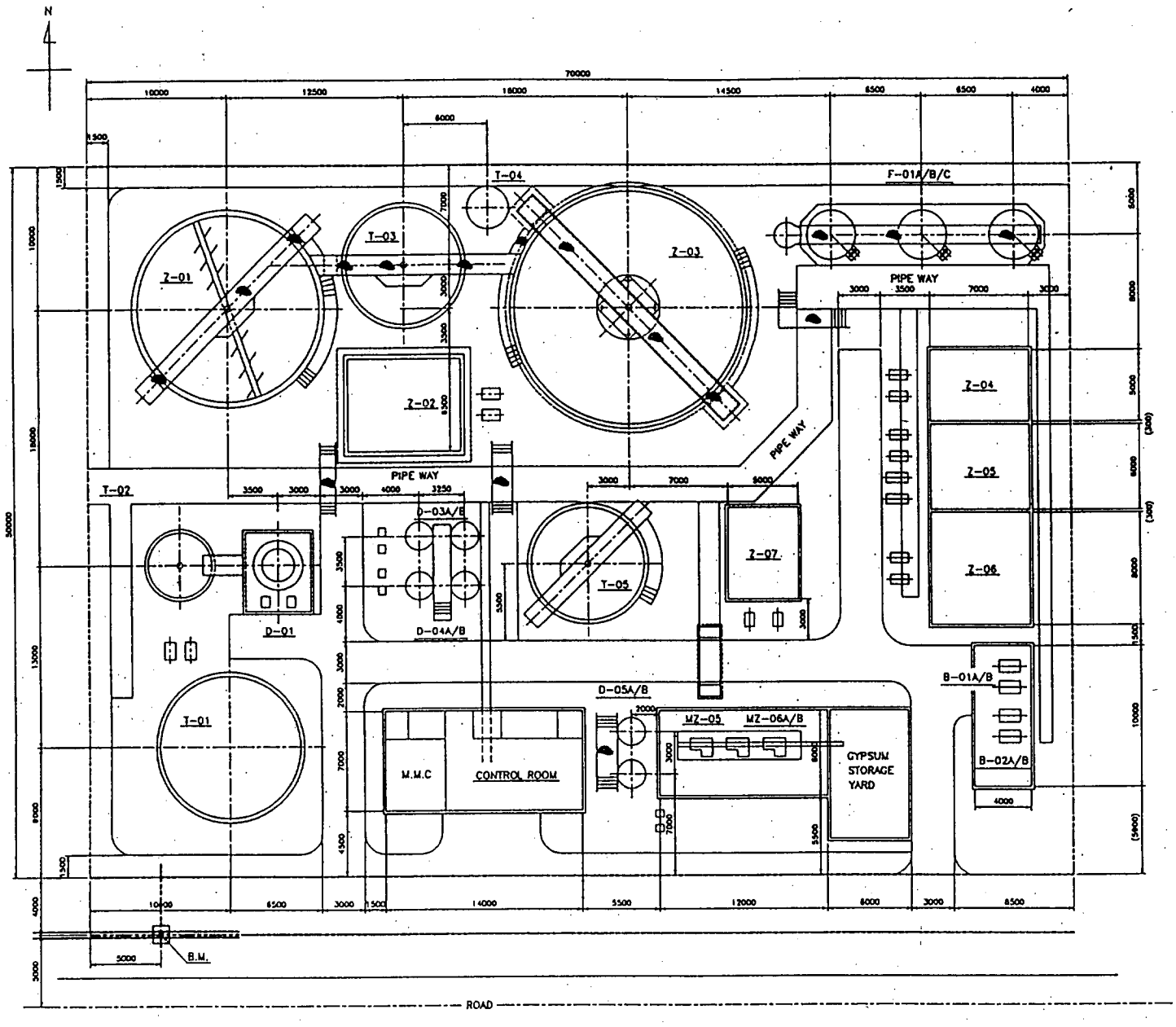

Equipment NO.	Service	Equipment NO.	Service
T-01	Equalization Tank	PU-08A/B	No.3 Sludge Pump
T-02	No.1 Neutralization Tank	PU-09A/B	Filter Feed Pump
T-03	No.2 Neutralization Tank	PU-10A/B	Backwash Pump
T-04	Coagulation Tank	PU-11A/B	Wastewater Return Pump
T-05	Sludge Thickener	PU-12A/B	Treated Water Pump
		PU-13A/B	Sludge Pump
D-01	Lime Hopper	PU-14A/B	Polymer B Pump
D-02	Lime Drum		
D-03	Coagulant Drum	MX-01	No.1Neutralization Mixer
D-04A/B	Polymer A Drum	MX-02	Lime Mixer
D-05A/B	Polymer B Drum	MX-03A/B	Coagulant Mixer
		MX-04A/B	Polymer A Mixer
F-01A/B/C	Sand Filter	MX-05	Coagulation Mixer
		MX-06A/B/C/D	Flocculation Mixer
Z-101	Waste Sulfuric Acid PE	MX-07A/B	Polymer B Mixer
Z-01	No.1 Sedimentation Tank		
Z-02	Gypsum PE	B-01A/B	Oxidation Blower
Z-03	No.2 Sedimentation Tank	B-02A/B	Backwash Blower
Z-04	Clarified Water PE		
Z-05	Treated Water PE	MZ-01	No.1 Sludge Rake
Z-06	Waste Water PE	MZ-02	Lime Feeder
Z-07	Sludge PE	MZ-03	No.2 Sludge Rake
		MZ-04	No.3 Sludge Rake
PU-	Acid Washwater Pump	MZ-05	No.1 Centrifuge
PU-101A/B	Waste Sulfuric Acid Pump	MZ-06A/B	No.2 Centrifuge
PU-01A/B	Wastewater Pump	MZ-07	Conveyer
PU-02A/B	No.1 Sludge Pump	MZ-08	Mixer for Equalization Tank
PU-03A/B	Gypsum Sludge Pump		
PU-04A/B	Lime Pump	C-01	Compressor
PU-05A/B	Coagulant Pump		
PU-06A/B	Polymer A Pump		
PU-07A/B	Polymer B Pump		

JICA	Chck	Tech	Appr						
Sign									
Date									
CHSL	Dsgn	Chck	Appr						
Sign				Rev	Description	Dsgn	Chck	Appr	Date
Date					REVISION				

CLIENT	JAPAN INTERNATIONAL COOPERATION AGENCY INDUSTRIAL DEVELOPMENT STUDY DIVISION		
CONSULTANT	CHIYODA DAMES & MOORE CO. CHIYODA CORPORATION		
PROJECT	THE STUDY ON INDUSTRIAL WASTE WATER POLLUTION CONTROL IN THE ARAB REPUBLIC OF EGYPT		
TITLE	FOR EGIPTIAN IRON AND STEEL CO. PLOT PLAN FOR W.W.T. DEMONSTRATION PLANT		
ISSUED DATE		SCALE	1/150
DWG NO	IS-BD-13-01	REV.	0

INSTRUMENTION SYMBOLS AND LEGEND

1.INSTRUMENT LINE SYMBOLS

- PNEUMATIC SIGNAL
- ELECTRIC SIGNAL

2.GENERAL INSTRUMENT SYMBOLS

- LOCALLY MOUNTED
- MOUNTED ON BOARD
- MOUNTED ON LOCAL BOARD
- TRANSMITTER
- LAMP
- INSTRUMENT IN MAIN PANEL

3.CONTROL VALVE ACTUATOR SYMBOLS

- DIAPHRAGM
- CYLINDER W/O SPRING
- CYLINDER WITH SPRING
- SOLENOID
- MOTOR
- WITH HAND WHEEL

ACCESSORICS

- WITH HAND WHEEL
- WITH LIMIT SWITCH

4.SYMBOLS FOR SELF ACTUATED REGULATOR

- BACKPRESSURE REGULATOR SELF-CONTAINED
- PRESSURE-REDUCING REGULATOR SELF-CONTAINED
- BACKPRESSURE REGULATOR WITH EXTERNAL PRESSURE TAP
- PRESSURE-REDUCING REGULATOR WITH EXTERNAL PRESSURE TAP

5.SYMBOLS FOR TEMPERATURE,FLOW AND LEVEL INSTRUMENTS

5-1.TEMPERATURE

- TW — TEMPERATURE CONNECTION WITH WELL
- TC — TEMPERATURE INDICATOR FILLED SYSTEM TYPE
- TC — BIMETALLIC TYPE THERMOMETER OR OTHER LOCAL UNCLASSIFIED TEMPERATURE INDICATOR
- TT — TEMPERATURE TRANSMITTER
- TE — THERMOCOUPLE DETECTOR
- TS(1)A, TS(2)A, -A, -B — TEMPERATURE SWITCHES (DOUBLE ELEMENT)
- TI, TS(1) — TEMPERATURE INDICATOR AND TEMPERATURE SWITCH (SINGLE ELEMENT PARALLEL CONNECTION IN CONTROL ROOM)

5-2.PRESSURE

- PG — PRESSURE INDICATOR DIRECT CONNECTION
- PG — PRESSURE INDICATOR CONNECTION TO CHEMICAL PROTECTOR WITH FILLED SYSTEM

5-3.FLOW

- FT — ORIFICE-FLANGE ASSEMBLY
- FT — VENTURY OR FLOW NOZZLE
- FT — TURBINE OR PROPELLER TYPE PRIMARY ELEMENT
- FO — FIXED RESTRICTION ORIFICE
- FI — ROTAMETER TYPE FLOW INDICATOR
- FQ — POSITIVE DISPLACEMENT TYPE FLOW TOTALIZING INDICATOR
- FI, M — MAGNETIC FLOW METER TYPE FLOW TOTALIZING INDICATOR

5-4.LEVEL

- TANK, LS — LEVEL SWITCH
- TANK, LT — LEVEL TRANSMITTER (INTERNAL FLOAT TYPE OR INTERNAL DISPLACER TYPE)
- TANK, LT — LEVEL TRANSMITTER (EXTERNAL DISPLANCER TYPE)
- LT — CAPACITANCE TYPE (D/P CELL TYPE)
- LX, LT — SONIC TYPE LEVEL TRANSMITTER WITH INTEGRAL SENSOR
- LT — LEVEL INDICATOR (FLOAT TYPE)
- TANK, U — LEVEL INDICATOR (TAPE TYPE)
- TANK, LG — GAGE GLASS

5-6.OTHERS

- DIAPHRAGM
- SAFETY VALVE
- SOLENOID VALVE
- SOLENOID VALVE WITH MANUAL RESET
- PURGE

FUNCTIONAL IDENTIFICATION LETTERS

LETTER	PROCESS VARIABLE/ FIRST LETTER	FUNCTION/ SUCCEEDING LETTER
A	ANALYSIS	ALARM
B	BURNER FLAME	
C	ELECTRICAL CONDUCTIVITY	CONTROL
D	DENSITY	
E	ELECTRIC VARIABLE	MEASURING ELEMENT
F	FLOW RATE	
G	DIMENSIONAL GAUGING	LOCAL INDICATE
H	HAND	HAND OPERATE
I		INDICATE
J		
K	TIME	COMPUTER CONTROL
L	LEVEL	LOGGING
M	MOISTURE OR HUMIDITY	
N	FREQUENCY	
O		
P	PRESSURE	SAMPLING POINT
Q	CALORIE	INTEGRATE OR TOTALISE
R		RECORD
S	SPEED,REVOLUTION OR FREQUENCY	SWITCHING/SEQUENCE
T	TEMPERATURE	TRANSMIT
U	UNCLASSIFIED OR MULTIPLE VARIABLE	UNCLASSIFIED OR MULTIPLE FUNCTION
V	VIBRATION	VALVE,DAMPER OR LOUVER
W	WEIGHT OR FORCE	WELL
X	OTHER VARIABLE	OTHER FUNCTION
Y		COMPUTE OR RELAY
Z		SAFETY OR EMERGENCY

JICA	Chck	Tech	Appr						
Sign									
Date									
CNSL	Dsgn	Chck	Appr						
Sign				Rev	Description	Dsgn	Chck	Appr	Date
Date					REVISION				

CLIENT	JAPAN INTERNATIONAL COOPERATION AGENCY INDUSTRIAL DEVELOPMENT STUDY DIVISION
CONSULTANT	CHIYODA DAMES & MOORE CO. CHIYODA CORPORATION
PROJECT	THE STUDY ON INDUSTRIAL WASTE WATER POLLUTION CONTROL IN THE ARAB REPUBLIC OF EGYPT
TITLE	FOR ENGINEERING FLOW DIAGRAM LEAD SHEET(2/2)
ISSUED DATE	SCALE None
DWG NO	REV. 0

INSTRUMENTION SYMBOLS AND LEGEND

1.INSTRUMENT LINE SYMBOLS

- PNEUMATIC SIGNAL
- ELECTRIC SIGNAL

2.GENERAL INSTRUMENT SYMBOLS

- LOCALLY MOUNTED
- MOUNTED ON BOARD
- MOUNTED ON LOCAL BOARD
- TRANSMITTER
- LAMP
- INSTRUMENT IN MAIN PANEL

3.CONTROL VALVE ACTUATOR SYMBOLS

- DIAPHRAGM
- CYLINDER W/O SPRING
- CYLINDER WITH SPRING
- SOLENOID
- MOTOR
- WITH HAND WHEEL

ACCESSORIES

- WITH HAND WHEEL
- WITH LIMIT SWITCH

4.SYMBOLS FOR SELF ACTUATED REGULATOR

- BACKPRESSURE REGULATOR SELF-CONTAINED
- PRESSURE-REDUCING REGULATOR SELF-CONTAINED
- BACKPRESSURE REGULATOR WITH EXTERNAL PRESSURE TAP
- PRESSURE-REDUCING REGULATOR WITH EXTERNAL PRESSURE TAP

5.SYMBOLS FOR TEMPERATURE,FLOW AND LEVEL INSTRUMENTS

5-1.TEMPERATURE

- TEMPERATURE CONNECTION WITH WELL
- TEMPERATURE INDICATOR FILLED SYSTEM TYPE
- BIMETALLIC TYPE THERMOMETER OR OTHER LOCAL UNCLASSIFIED TEMPERATURE INDICATOR
- TEMPERATURE TRANSMITTER
- THERMOCOUPLE DETECTOR
- TEMPERATURE SWITCHES (DOUBLE ELEMENT)
- TEMPERATURE INDICATOR AND TEMPERATURE SWITCH (SINGLE ELEMENT PARALLEL CONNECTION IN CONTROL ROOM)

5-2.PRESSURE

- PRESSURE INDICATOR DIRECT CONNECTION
- PRESSURE INDICATOR CONNECTION TO CHEMICAL PROTECTOR WITH FILLED SYSTEM

5-3.FLOW

- ORIFICE-FLANGE ASSEMBLY
- VENTURY OR FLOW NOZZLE
- TURBINE OR PROPELLER TYPE PRIMARY ELEMENT
- FIXED RESTRICTION ORIFICE
- ROTAMETER TYPE FLOW INDICATOR
- POSITIVE DISPLACEMENT TYPE FLOW TOTALIZING INDICATOR
- MAGNETIC FLOW METER TYPE FLOW TOTALIZING INDICATOR

5-4.LEVEL

- LEVEL SWITCH
- LEVEL TRANSMITTER (INTERNAL FLOAT TYPE OR INTERNAL DISPLACER TYPE)
- LEVEL TRANSMITTER (EXTERNAL DISPLACER TYPE)
- CAPACITANCE TYPE (D/P CELL TYPE)
- SONIC TYPE LEVEL TRANSMITTER WITH INTEGRAL SENSOR
- LEVEL INDICATOR (FLOAT TYPE)
- LEVEL INDICATOR (TAPE TYPE)
- GAGE GLASS

5-6.OTHERS

- DIAPHRAGM
- SAFETY VALVE
- SOLENOID VALVE
- SOLENOID VALVE WITH MANUAL RESET
- PURGE

FUNCTIONAL IDENTIFICATION LETTERS

LETTER	PROCESS VARIABLE/ FIRST LETTER	FUNCTION/ SUCCEEDING LETTER
A	ANALYSIS	ALARM
B	BURNER FLAME	
C	ELECTRICAL CONDUCTIVITY	CONTROL
D	DENSITY	
E	ELECTRIC VARIABLE	MEASURING ELEMENT
F	FLOW RATE	
G	DIMENSIONAL GAUGING	LOCAL INDICATE
H	HAND	HAND OPERATE
I		INDICATE
J		
K	TIME	COMPUTER CONTROL
L	LEVEL	LOGGING
M	MOISTURE OR HUMIDITY	
N	FREQUENCY	
O		
P	PRESSURE	SAMPLING POINT
Q	CALORIE	INTEGRATE OR TOTALISE
R		RECORD
S	SPEED,REVOLUTION OR FREQUENCY	SWITCHING/SEQUENCE
T	TEMPERATURE	TRANSMIT
U	UNCLASSIFIED OR MULTIPLE VARIABLE	UNCLASSIFIED OR MULTIPLE FUNCTION
V	VIBRATION	VALVE,DAMPER OR LOUVER
W	WEIGHT OR FORCE	WELL
X	OTHER VARIABLE	OTHER FUNCTION
Y		COMPUTE OR RELAY
Z		SAFETY OR EMERGENCY

JICA	Chck	Tech	Appr						
Sign									
Date									
CNSL	Dsgn	Chck	Appr						
Sign				Rev	Description	Dsgn	Chck	Appr	Date
Date					REVISION				

CLIENT	JAPAN INTERNATIONAL COOPERATION AGENCY INDUSTRIAL DEVELOPMENT STUDY DIVISION
CONSULTANT	CHIYODA DAMES & MOORE CO. CHIYODA CORPORATION
PROJECT	THE STUDY ON INDUSTRIAL WASTE WATER POLLUTION CONTROL IN THE ARAB REPUBLIC OF EGYPT
TITLE	FOR ENGINEERING FLOW DIAGRAM LEAD SHEET(2/2)
ISSUED DATE	SCALE: None
DWG NO	REV.: 0

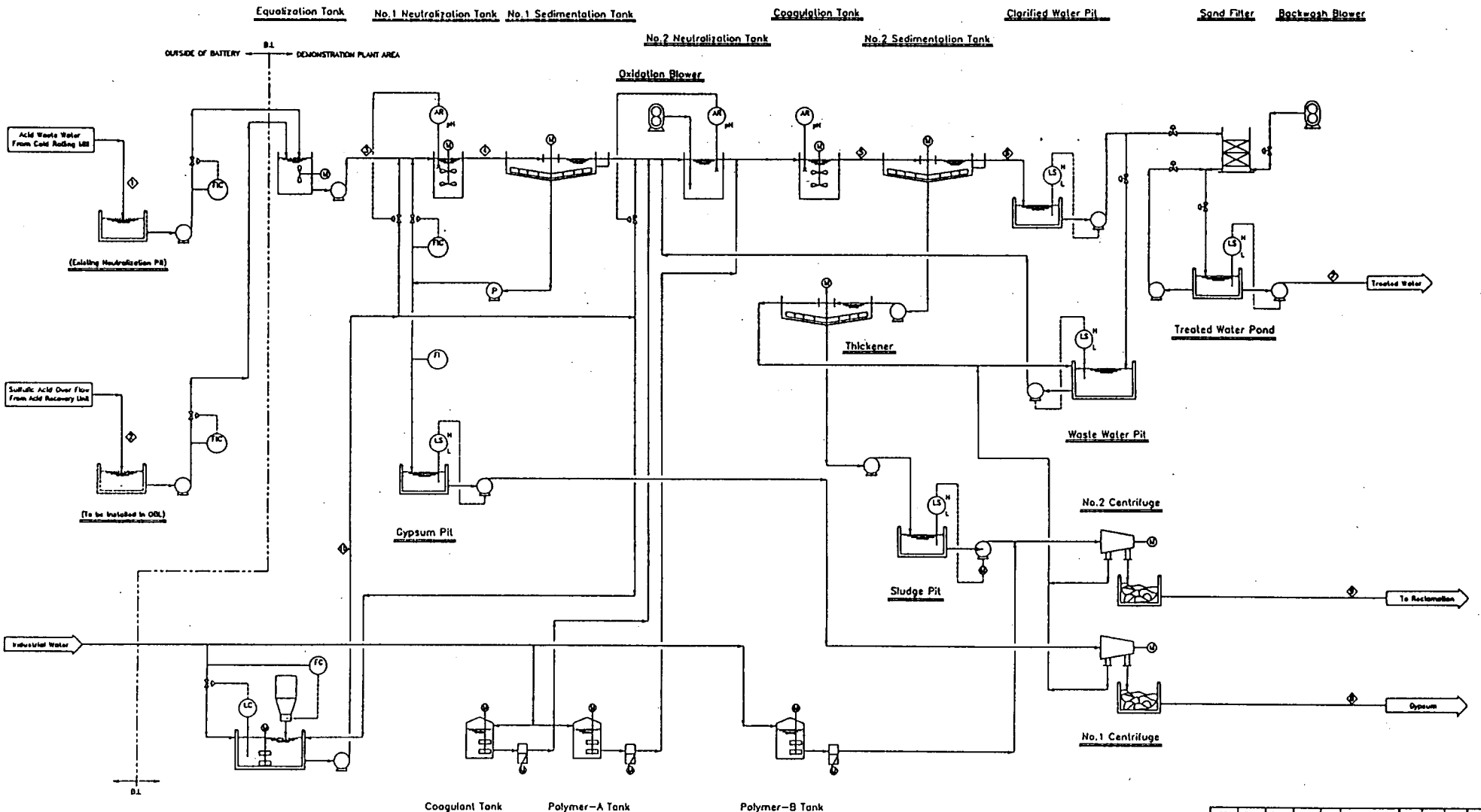

Item \ Stream No		①	②	③	④	⑤	⑥	⑦	⑧	⑨	⑩	Hile Branch Regulation
Flow rate Ave.	[m³/h]	150	1.67	151.67	162.07	225.48	159.17	151.21	1.18	7.65	8.37	—
Flow rate Max.	[m³/h]	170	40(m³/D)	171.67	182.07	246.53	180.22	171.21	2.36	7.65	8.37	6-9
pH	[s/cm]	0-2	0-2	0-2	4	7	7	7	4	7		—
SS	[mg /L]								600000	200000		30
Oil & Grease	[mg /L]	<5	<5					<5				5
BOD	[mg /L]	<20	<20					<20				20
COD	[mg /L]	<30	<30					<30				30
TDS	[mg /L]	4000	16000					>2000				P.OU
											10% $Ca(OH)_2$ Slurry	

JICA	Chck	Tech	Appr						
Sign									
Date									
CNSL	Dsgn	Chck	Appr						
Sign				Rev	Description	Dsgn	Chck	Appr	Date
Date					REVISION				

CLIENT	JAPAN INTERNATIONAL COOPERATION AGENCY INDUSTRIAL DEVELOPMENT STUDY DIVISION
CONSULTANT	CHIYODA DAMES & MOORE CO. CHIYODA CORPORATION
PROJECT	THE STUDY ON INDUSTRIAL WASTE WATER POLLUTION CONTROL IN THE ARAB REPUBLIC OF EGYPT
TITLE	FOR EGYPTIAN IRON AND STEEL CO. PROCESS FLOW DIAGRAM OF W.W.T. DEMONSTRATION PLANT
ISSUED DATE	SCALE None
DWG NO	IS-BD-15-01 REV. 0

Case 1 Base Case

Acid Wash Water	for Solids	Hydraulics
Q(m^3/h)	150	170
H_2SO_4(kg/m^3)	2.5	
$FeSO_4$(kg/m^3)	3.5	

Waste Acid	
Q(m^3/h)	1.67
H_2SO_4(kg/m^3)	120
$FeSO_4$(kg/m^3)	180

H_2SO_4 loading (kg/h)	575
$FeSO_4$ loading (kg/h)	825

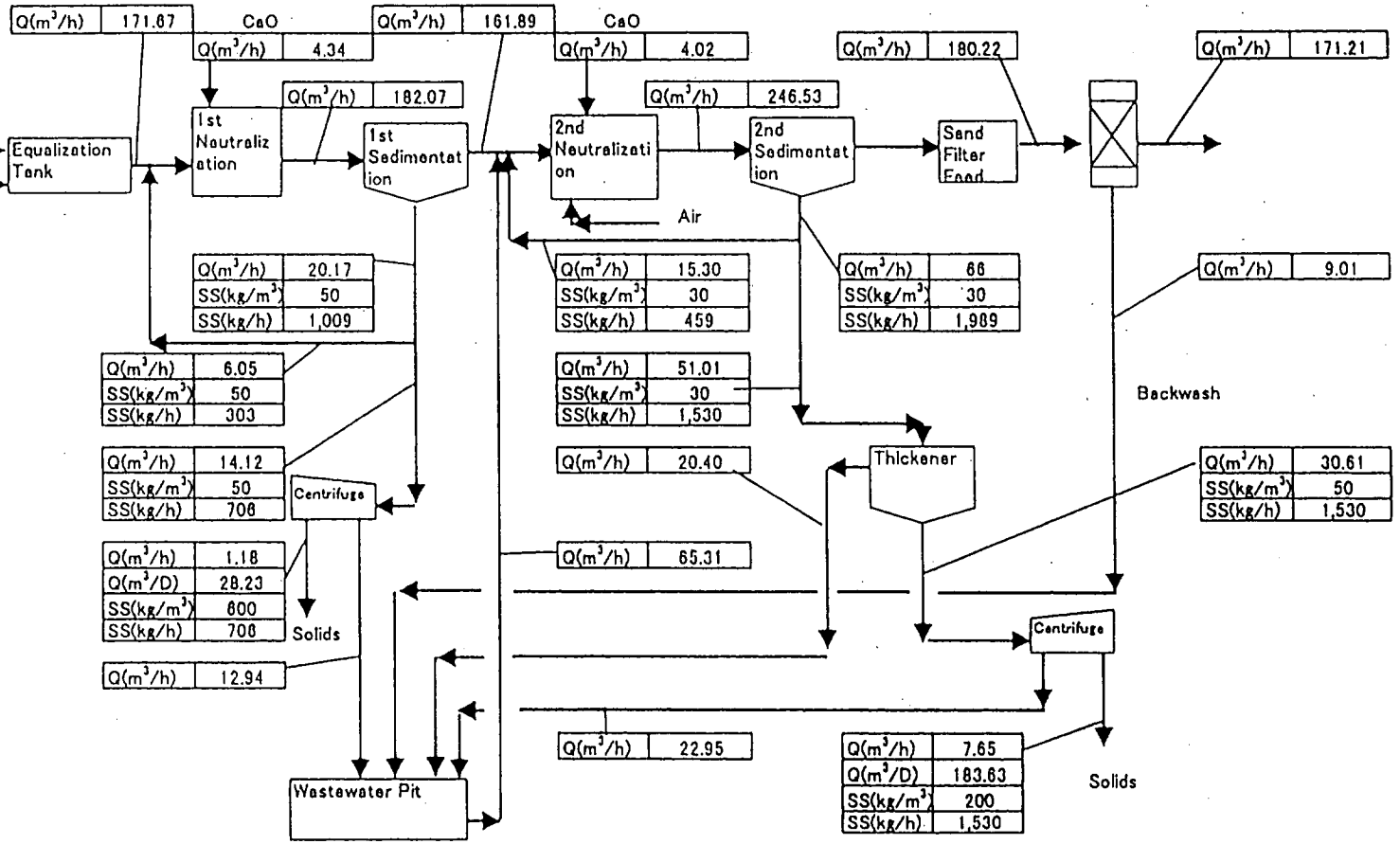

Solids Production Unit

1st stage gypsum

[H_2SO_4 loading] * 1.755 − [2.0 kg/m^3*Qm^3/h]

2nd stage $Fe(OH)_3$

[$FeSO_4$ loading] * 0.704

2nd stage gypsum

[$FeSO_4$ loading] * 1.133

2nd stage others

[0.1 kg/m^3 * Q m^3/h]

Lime Requirement as CaO

1st stage

[H_2SO_4 loading] * 0.572

2nd stage

[$FeSO_4$ loading] * 0.369

Solids Production

1st stage gypsum
706 kg/h

2nd stage $Fe(OH)_3$
580 kg/h

2nd stage gypsum
935 kg/h

2nd stage others
15 kg/h

2nd stage total
1,530 kg/h

1st + 2nd total
2,236 kg/h
53,666 kg/D

Lime Requirement as CaO

1st stage
329 kg/h

2nd stage
305 kg/h

Lime Solution:
10% as $Ca(OH)_2$
= 7.57% as CaO

1st + 2nd total
633 kg/h
15201 kg/D

3,690 kg/1000m^3-wastewater

Molecular weight	
H_2SO_4	98.1
$CaSO_4 \cdot 2H_2O$	172.2
$FeSO_4$	151.9
$Fe_2(SO_4)_3$	399.9
$Fe(OH)_3$	106.9
CaO	56.1
$Ca(OH)_2$	74.1

CHEMICAL REACTION and WATER BALANCE

1st stage Gypsum Poduction

$$H_2SO_4 + Ca(OH)_2 \rightarrow CaSO_4 \cdot 2H_2O \downarrow$$

2nd stage Iron Oxidation and Gypsum Production

$$FeSO_4 + 5H_2O + 1/2O_2 \rightarrow Fe(OH)_3 \downarrow + H_2SO_4$$

$$H_2SO_4 + Ca(OH)_2 \rightarrow CaSO_4 \cdot 2H_2O \downarrow$$

Case 2 H_2SO_4 in Wastewater 1.2%

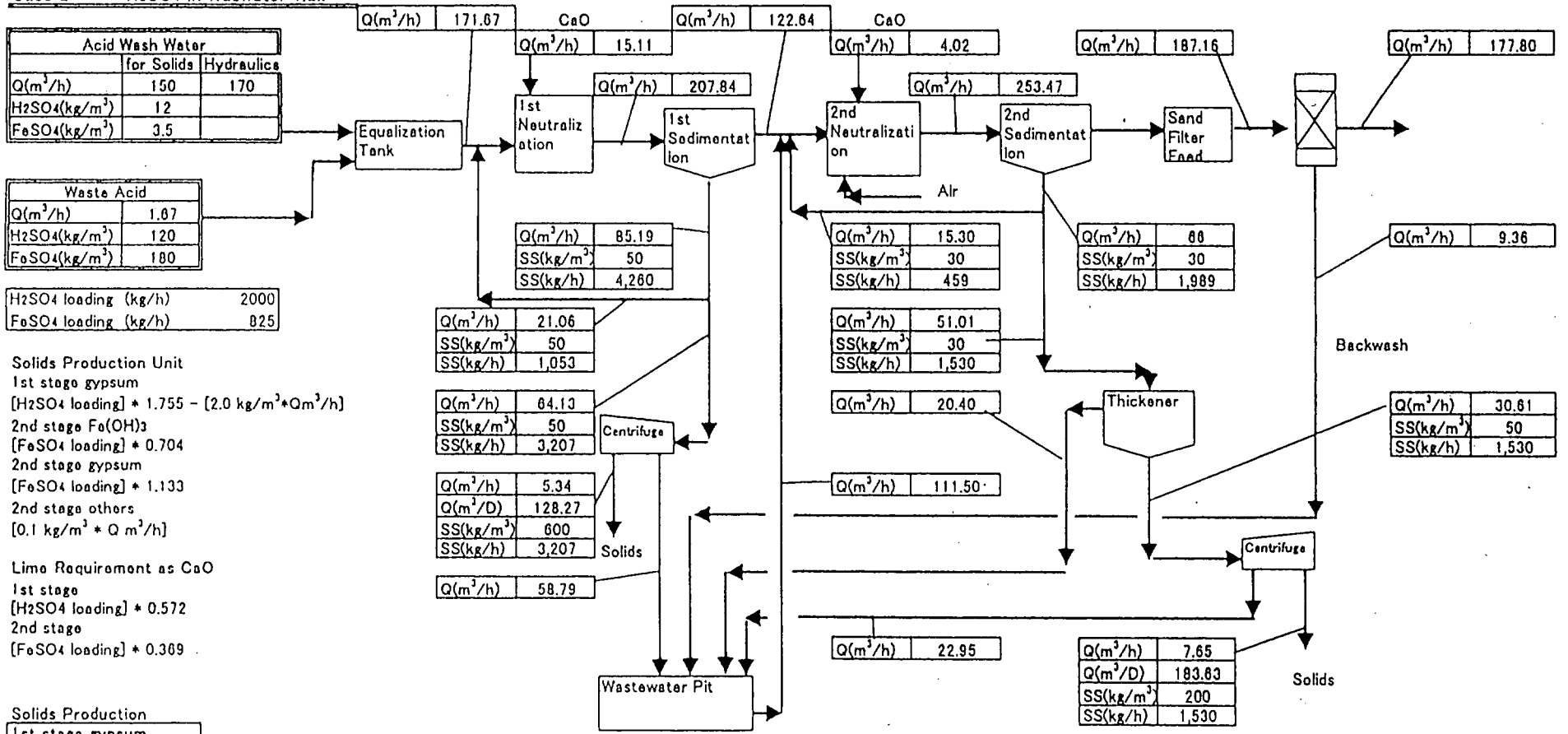

Solids Production Unit

1st stage gypsum

[H_2SO_4 loading] * 1.755 − [2.0 kg/m³*Qm³/h]

2nd stage $Fe(OH)_3$

[$FeSO_4$ loading] * 0.704

2nd stage gypsum

[$FeSO_4$ loading] * 1.133

2nd stage others

[0.1 kg/m³ * Q m³/h]

Lime Requirement as CaO

1st stage

[H_2SO_4 loading] * 0.572

2nd stage

[$FeSO_4$ loading] * 0.369

Solids Production

1st stage gypsum
3,207 kg/h

2nd stage $Fe(OH)_3$
580 kg/h

2nd stage gypsum
935 kg/h

2nd stage others
15 kg/h

2nd stage total
1,530 kg/h

1st + 2nd total
4,737 kg/h
113,687 kg/D

Lime Requirement as CaO

1st stage
1,144 kg/h

Lime Solution:
10% as $Ca(OH)_2$
= 7.57% as CaO

2nd stage
305 kg/h

1st + 2nd total
1,448 kg/h
34756.6 kg/D

8,436 kg/1000m³-wastewater

Molecular weight	
H_2SO_4	98.1
$CaSO_4 \cdot 2H_2O$	172.2
$FeSO_4$	151.9
$Fe_2(SO_4)_3$	399.9
$Fe(OH)_3$	106.9
CaO	56.1
$Ca(OH)_2$	74.1

CHEMICAL REACTION and WATER BALANCE

1st stage Gypsum Poduction

$$H_2SO_4 + Ca(OH)_2 \rightarrow CaSO_4 \cdot 2H_2O \downarrow$$

2nd stage Iron Oxidation and Gypsum Production

$$FeSO_4 + 5H_2O + 1/2O_2 \rightarrow Fe(OH)_3 \downarrow + H_2SO_4$$

$$H_2SO_4 + Ca(OH)_2 \rightarrow CaSO_4 \cdot 2H_2O \downarrow$$

Case 3 Wash Water Only

Acid Wash Water	for Solids	Hydraulics
Q(m^3/h)	150	170
H_2SO_4(kg/m^3)	2.5	
$FeSO_4$(kg/m^3)	3.5	

Waste Acid	
Q(m^3/h)	0.00
H_2SO_4(kg/m^3)	120
$FeSO_4$(kg/m^3)	180

H_2SO_4 loading (kg/h)	375
$FeSO_4$ loading (kg/h)	525

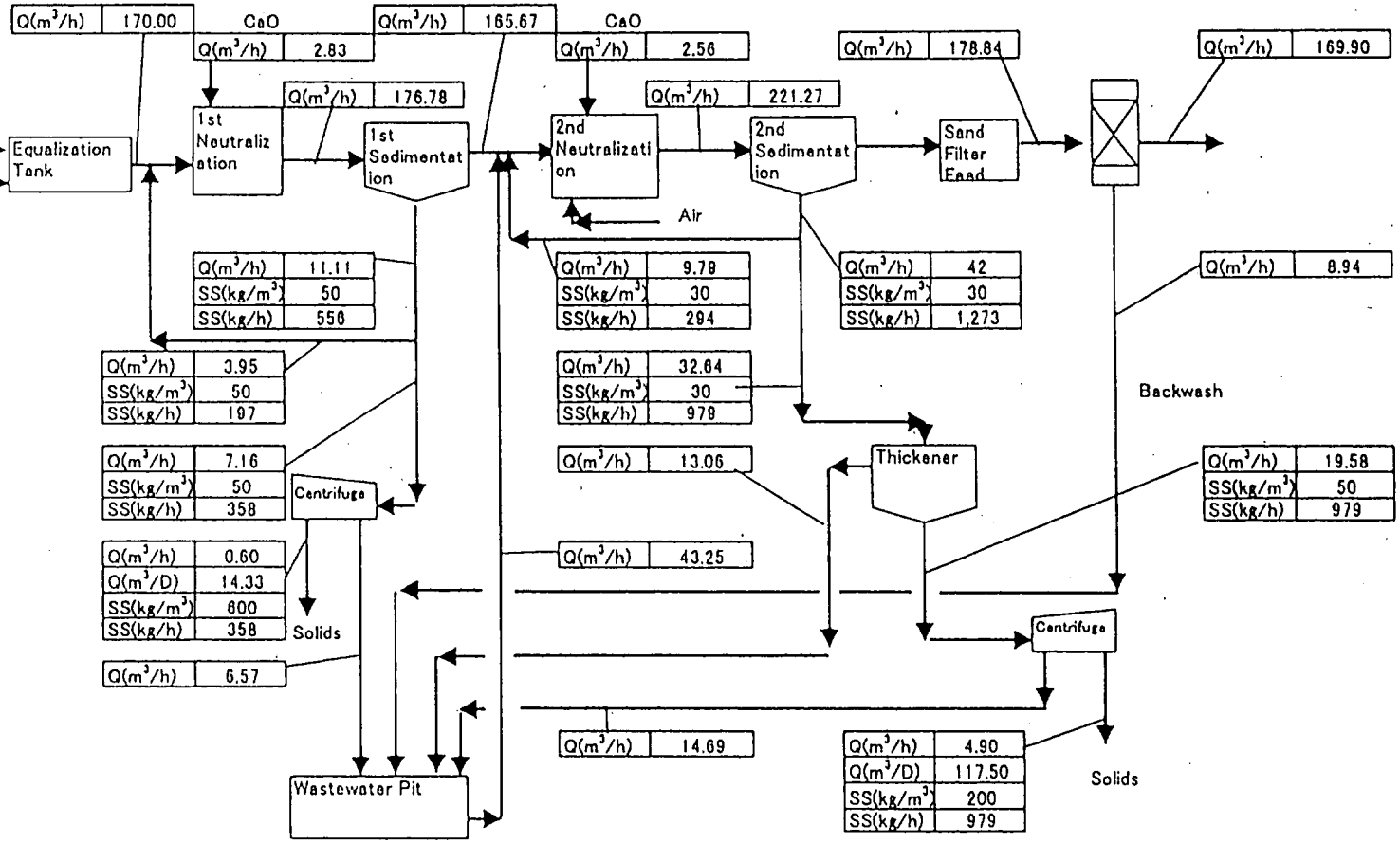

Solids Production Unit

1st stage gypsum

[H_2SO_4 loading] * 1.755 - [2.0 kg/m^3*Qm^3/h]

2nd stage $Fe(OH)_3$

[$FeSO_4$ loading] * 0.704

2nd stage gypsum

[$FeSO_4$ loading] * 1.133

2nd stage others

[0.1 kg/m^3 * Q m^3/h]

Lime Requirement as CaO

1st stage

[H_2SO_4 loading] * 0.572

2nd stage

[$FeSO_4$ loading] * 0.369

Solids Production

1st stage gypsum
358 kg/h

2nd stage $Fe(OH)_3$
369 kg/h

2nd stage gypsum
595 kg/h

2nd stage others
15 kg/h

2nd stage total
979 kg/h

1st + 2nd total
1,337 kg/h
32,095 kg/D

Molecular weight	
H_2SO_4	98.1
$CaSO_4 \cdot 2H_2O$	172.2
$FeSO_4$	151.9
$Fe_2(SO_4)_3$	399.9
$Fe(OH)_3$	106.9
CaO	56.1
$Ca(OH)_2$	74.1

Lime Requirement as CaO

1st stage
214 kg/h

2nd stage
194 kg/h

Lime Solution:
10% as $Ca(OH)_2$
= 7.57% as CaO

1st + 2nd total
408 kg/h
9798.12 kg/D

2,402 kg/1000m^3-wastewater

CHEMICAL REACTION and WATER BALANCE

1st stage Gypsum Poduction

$$H_2SO_4 + Ca(OH)_2 \rightarrow CaSO_4 \cdot 2H_2O \downarrow$$

2nd stage Iron Oxidation and Gypsum Production

$$FeSO_4 + 5H_2O + 1/2O_2 \rightarrow Fe(OH)_3 \downarrow + H_2SO_4$$
$$H_2SO_4 + Ca(OH)_2 \rightarrow CaSO_4 \cdot 2H_2O \downarrow$$

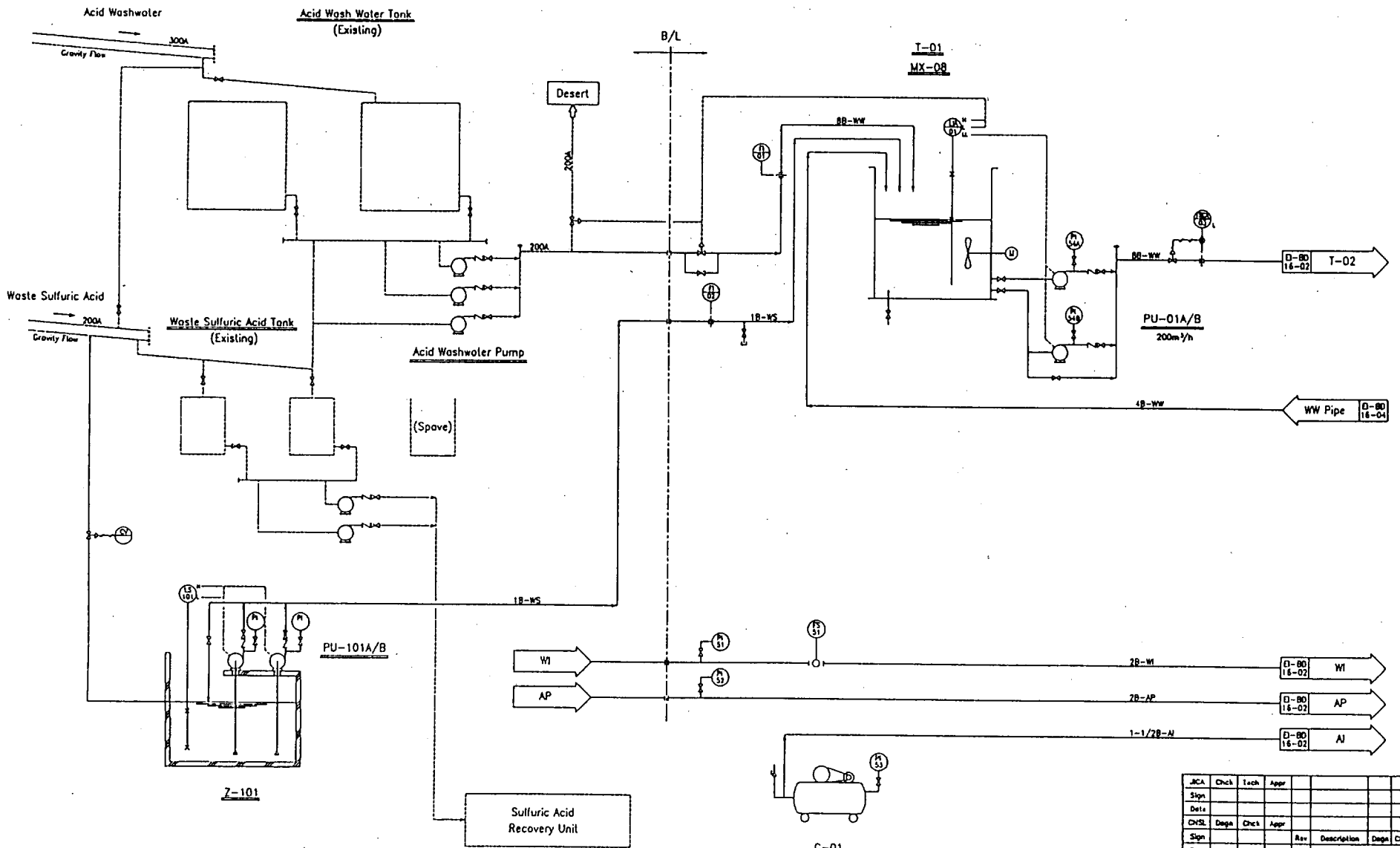

ITEM No.	Z-101	PU-101A/B	T-01	MX-08	PU-01A/B	C-01
SERVICE	Waste Sulfuric Acid Pit	Waste Sulfuric Acid Pump	Equalization Tank	Equalization Tank Mixer	Wastewater Pump	AI Compressor
SIZE(m)	4.0mx5.0mLx6.0mH	2m³/hx25mHx0.75kW	11.6mDx10.6mH	1.5kW	200m³/hx10mHx15kW	200L/minx0.7MPax0.75kW
DESIGN PRESS(MPa)	Full Water	1	Full Water	1	1	15
DESIGN TEMP.(°C)	Amb.	Amb.	Amb.	Amb.	Amb.	200
MATERIAL/TYPE	RC/Open Basin	SCS/Centri.Horiz.	C.S+Resin Lining/OTI	SCS/Tank Side	SCS/Centri.Horiz.	CS/Baby com.

JICA	Chck	Tech	Appr						
Sign									
Date									
CNSL	Dsgn	Chck	Appr						
Sign				Rev	Description	Dsgn	Chck	Appr	Date
Date					REVISION				

CLIENT	JAPAN INTERNATIONAL COOPERATION AGENCY INDUSTRIAL DEVELOPMENT STUDY DIVISION
CONSULTANT	CHIYODA DAMES & MOORE CO. CHIYODA CORPORATION
PROJECT	THE STUDY ON INDUSTRIAL WASTE WATER POLLUTION CONTROL IN THE ARAB REPUBLIC OF EGYPT
TITLE	FOR EGYPTIAN IRON & STEEL CO. ENGINEERING FLOW DIAGRAM FOR W.W.T. DEMONSTRATION PLANT(1/8)
ISSUED DATE	SCALE: None
DWG NO	D-80-16-01 REV. 0

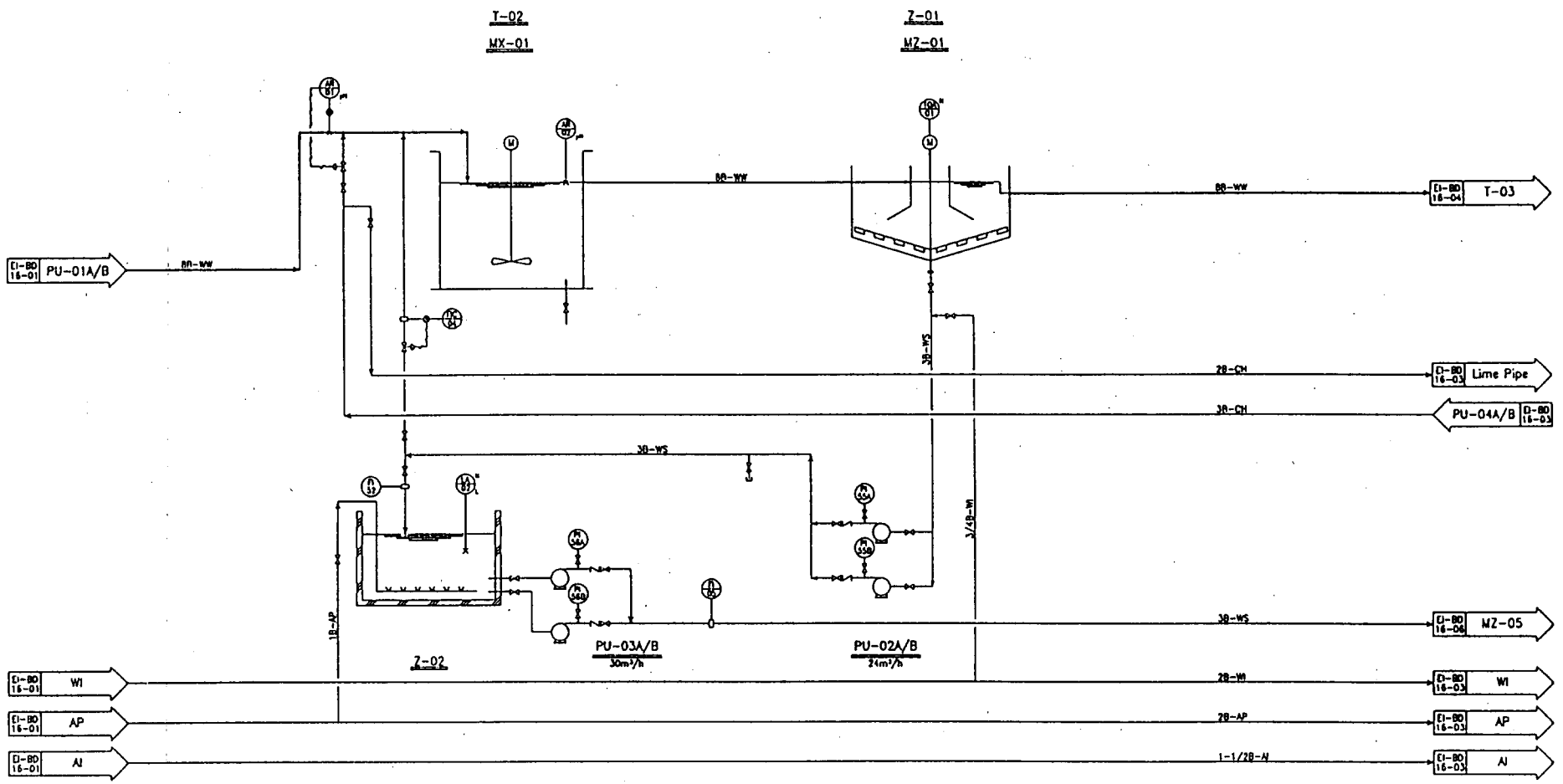

ITEM No.	T-02	Z-01	Z-02	MX-01	MZ-01	PU-02A/B	PU-03A/B
SERVICE	No.1 Neutralization Tank	No.1 Sedimentation Tank	Gypsum Pit	No.1 Neutralization Mixer	No.1 Sludge Rake	No.1 Sludge Pump	Gypsum Sludge Pump
SIZE(m)	4.5mlDx6.1mH	13mlDx3.5mH	6.5mWx8mLx3.5mH	3.7kW	1.5kW,D=13mφ,L=4.5m	24m³/hx15mHx1.5kW	30m³/hx15mHx2.2kW
DESIGN PRESS(MPa)	Full Water	Full Water	Full Water	1	Full Water	1	1
DESIGN TEMP.(°C)	Amb.	Amb.	Amb.	Amb.	Amb.	Amb.	Amb.
MATERIAL/TYPE	CS+R.Lining/Verti.	RC+R.Lining/Circular	CS+R.Lining/Rectangular	SUS/Vertical	CS/+R.lining/Center Driven	SCS/Centri.Horiz.	SCS/Centri.Horiz.

JICA	Chck	Tech	Appr						
Sign									
Date									
CNSL	Dsgn	Chck	Appr						
Sign				Rev	Description	Dsgn	Chck	Appr	Date
Date					REVISION				

CLIENT	JAPAN INTERNATIONAL COOPERATION AGENCY INDUSTRIAL DEVELOPMENT STUDY DIVISION		
CONSULTANT	CHIYODA DAMES & MOORE CO. CHIYODA CORPORATION		
PROJECT	THE STUDY ON INDUSTRIAL WASTE WATER POLLUTION CONTROL IN THE ARAB REPUBLIC OF EGYPT		
TITLE	FOR ECYPTIAN IRON & STEEL CO. ENGINEERING FLOW DIAGRAM FOR W.W.T. DEMONSTRATION PLANT(2/6)		
ISSUED DATE		SCALE	None
DWG NO	EI-BD-16-02	REV.	0

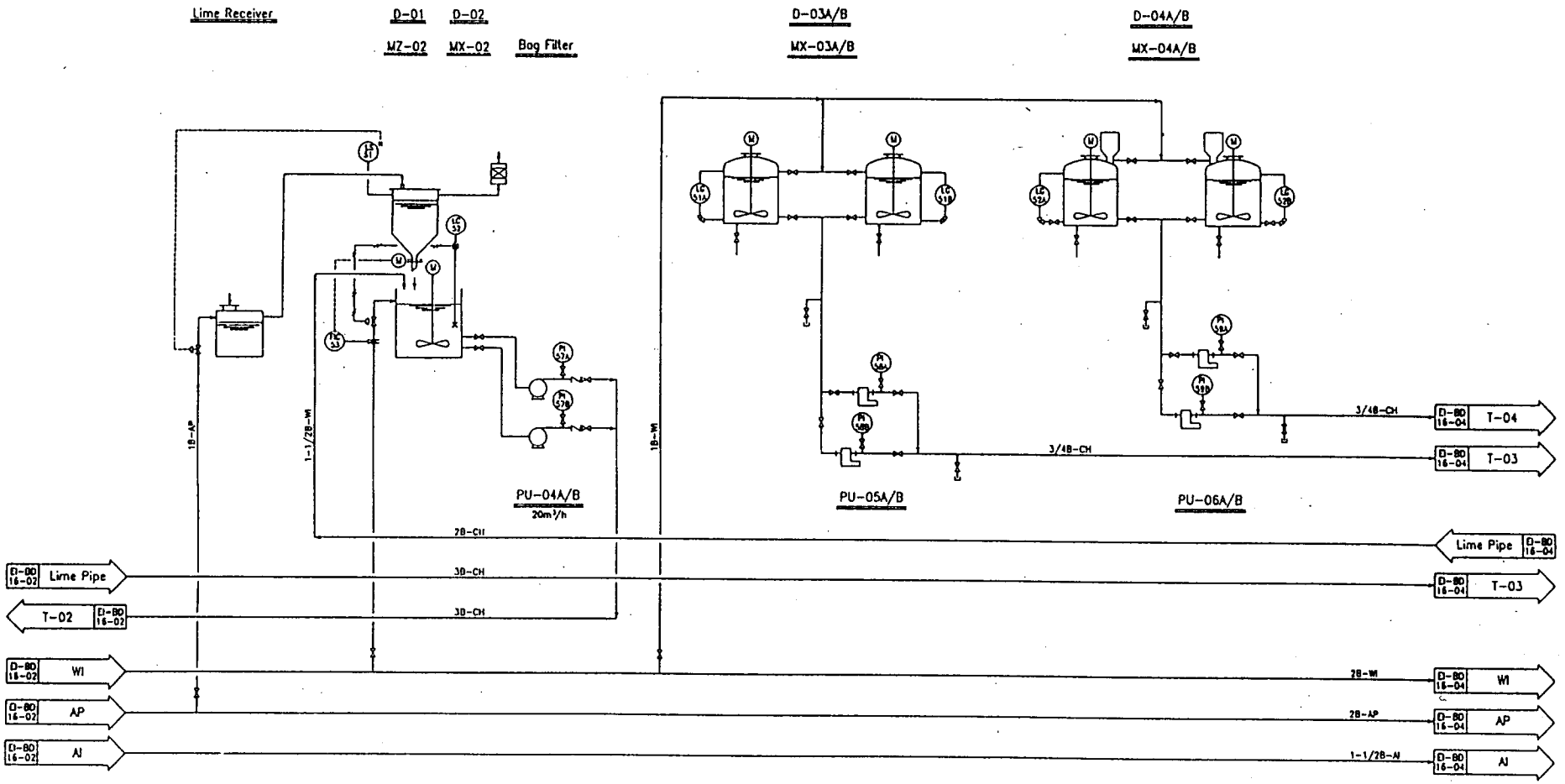

ITEM No.	PU-06A/B
SERVICE	Polymer B Pump
SIZE(m)	10L/min×0.5MPa×0.75kW
DESIGN PRESS(MPa)	1
DESIGN TEMP.(°C)	Amb.
MATERIAL/TYPE	SCS/Diaphragm

ITEM No.	D-01	D-02	D-03A/B	D-04A/B	WZ-02	WX-02	WX-03A/B	WX-04A/B	PU-04A/B	PU-05A/B
SERVICE	Lime Hopper	Lime Drum	Coagulant Drum	Polymer A Drum	Lime Feeder	Lime Mixer	Coagulant Mixer	Plymer A Mixer	Lime Pump	Coagulant Pump
SIZE(m)	3.0mlDx4.0mH	3.6mlDx3.6mH	2.0mlDx2.5mH	2.0mlDx2.5mH	2.2kW	3.7kW, L=3.0m	1.5kW, L=2.5m	1.5kW, L=2.5m	20m³/hx15mHx1.1kW	1.0L/minx0.5MPax0.4kW
DESIGN PRESS(MPa)	Full Water	Full Water	Full Water	Full Water		Full Water	Full Water	Full Water	1	1.0
DESIGN TEMP.(°C)	Amb.	Amb.	Amb.	Amb.	Amb.	Amb.	Amb.	Amb.	Amb.	Amb.
MATERIAL/TYPE	CS/Cylind.Verti.	CS/Cylind.Verti.	CS+1RL/Cylind. Verti.	CS/Cylind. Verti.	SUS/Disc	SUS/Verti.	SUS/Verti.	SUS/Verti.	SCS/Centri. Horiz.	SCS/Plunger

JICA	Chck	Tech	Appr						
Sign									
Date									
CHSL	Dsgn	Chck	Appr						
Sign				Rev	Description	Dsgn	Chck	Appr	Date
Date					REVISION				

CLIENT	JAPAN INTERNATIONAL COOPERATION AGENCY INDUSTRIAL DEVELOPMENT STUDY DIVISION
CONSULTANT	CHIYODA DAMES & MOORE CO. CHIYODA CORPORATION
PROJECT	THE STUDY ON INDUSTRIAL WASTE WATER POLLUTION CONTROL IN THE ARAB REPUBLIC OF EGYPT
TITLE	FOR EGYPTIAN IRON & STEEL CO. ENGINEERING FLOW DIAGRAM FOR W.W.T. DEMONSTRATION PLANT(3/6)
ISSUED DATE	SCALE: None
DWG NO	D-BD-16-03 REV. 0

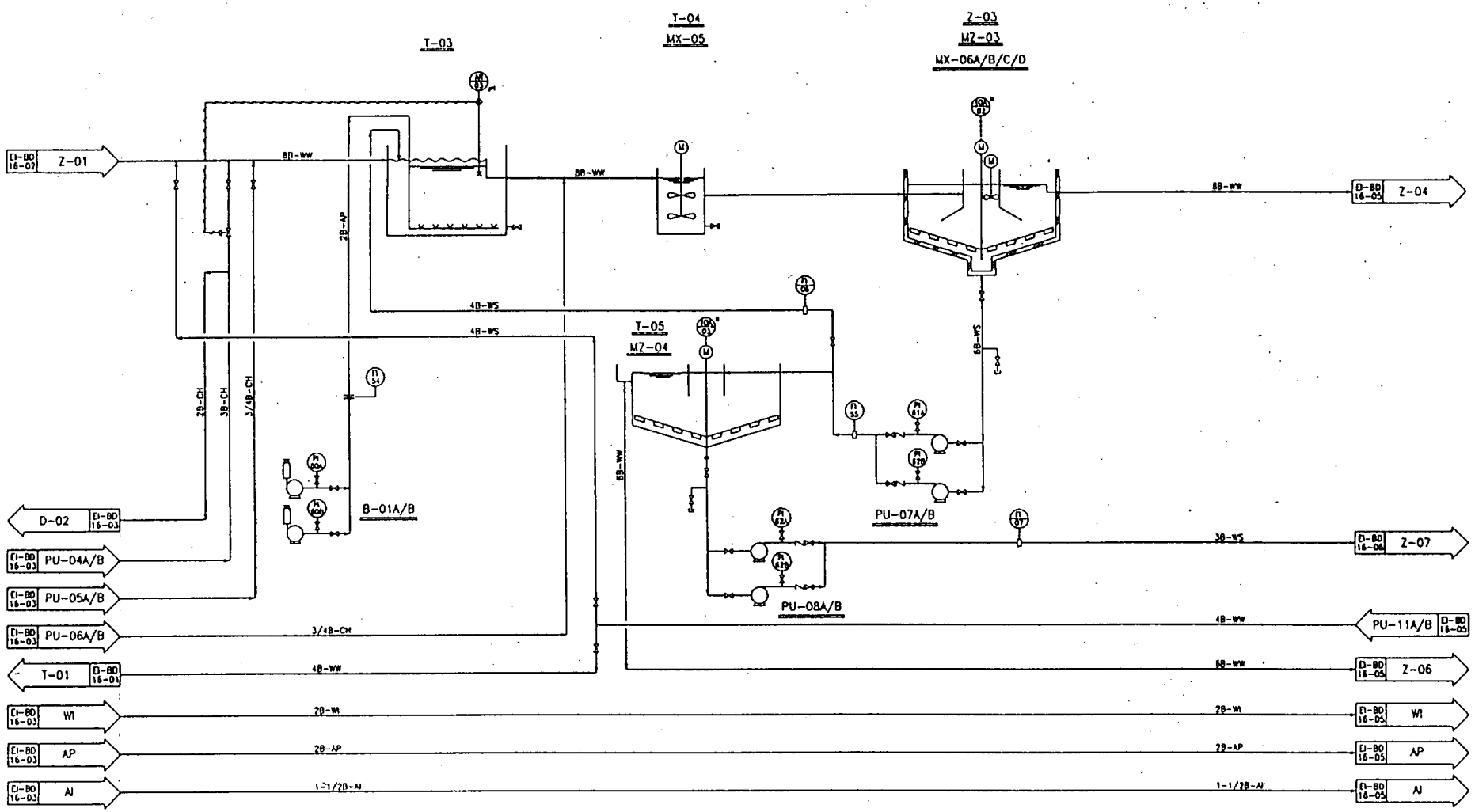

ITEM No.	PU-08A/B
SERVICE	No.3 Sludge Pump
SIZE(m)	35m³/hx15mHx2.2kW
DESIGN PRESS(MPa)	1
DESIGN TEMP.(°C)	Amb.
MATERIAL/TYPE	SCS/Centri. Horiz.

ITEM No.	T-03	T-04	T-05	Z-03	MX-05	MX-06A/B/C/D	MZ-03	MZ-04	B-01A/B	PU-07A/B
SERVICE	No.2 Neutralization Tank	Coagulation Tank	Sludge Thickener	No.2 Sedimentation Tank	Coagulation Mixer	Flocculation Mixer	No.2 Sludge Rake	No.3 Sludge Rake	Oxydation Blower	No.2 Sludge Pump
SIZE(m)	8.2mIDx5.2mH	3.0mIDx3.0mH	8.0mIDx4.0mH	16mIDx3.0mH	2.2kW, L=3.5m	0.2kW, L=2.0m	1.5kW,D=15mø, L=1.0m	0.75kW,D=8mø, L=4.5m	25Nm³/minx5mHx55kW	70m³/hx15mHx5.5kW
DESIGN PRESS(MPa)	Full Water	Full Water	Full Water	Full Water	Full Water	Full Water	Full Water	Full Water	0.5	1
DESIGN TEMP.(°C)	Amb.	Amb.	Amb.	Amb.	Amb.	Amb.	Amb.	Amb.	200	Amb.
MATERIAL/TYPE	CS+R.Lining/OTT	CS+R.Lining/OTT	CS+R.Lining/Circular	RC+HRL/Circular	SUS/Verti.	SUS/Verti.	CS+R.Lining/Center Driver	CS+R.Lining/Center Driver	CI/Root	SCS/Centri. Horiz.

JICA	Chck	Tech	Appr						
Sign									
Date									
CNSL	Dsgn	Chck	Appr						
Sign				Rev	Description	Dsgn	Chck	Appr	Date
Date					REVISION				

CLIENT	JAPAN INTERNATIONAL COOPERATION AGENCY INDUSTRIAL DEVELOPMENT STUDY DIVISION
CONSULTANT	CHIYODA DAMES & MOORE CO. CHIYODA CORPORATION
PROJECT	THE STUDY ON INDUSTRIAL WASTE WATER POLLUTION CONTROL IN THE ARAB REPUBLIC OF EGYPT
TITLE	FOR EGYPTIAN IRON & STEEL CO. ENGINEERING FLOW DIAGRAM FOR W.W.T. DEMONSTRATION PLANT(4/8)
ISSUED DATE	SCALE: None
DWG NO	D-BD-16-04 REV. 0

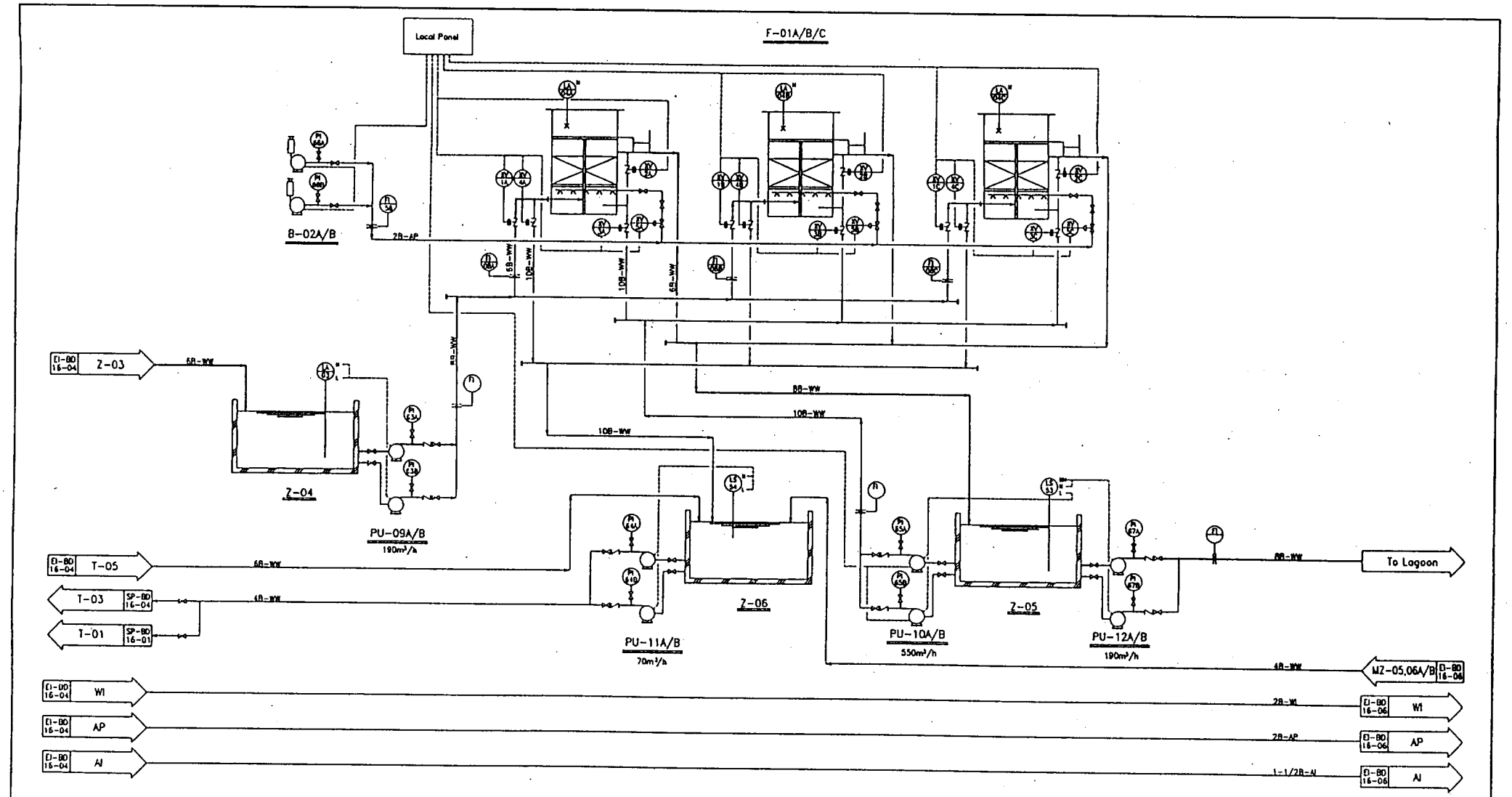

ITEM No.	F-01A/B/C	Z-04	Z-05	Z-06	PU-09A/B	PU-10A/B	PU-11A/B	PU-12A/B
SERVICE	Sand Filter	Clarified Water Pit	Treated Water Pond	Waste Water Pit	Filter Feed Pump	Backwash Pump	Wastewater Return Pump	Treated Water Pump
SIZE(m)	4.0mØx4.5mH	5mWx6.5mLx3.0mH	6.0mWx6.5mLx3.0mH	8mWx6.5mLx3.0mH	190m³/hx15mHx15kW	190m³/hx15mHx15kW	70m³/hx15mHx5.5kW	190m³/hx50mHx22kW
DESIGN PRESS(MPa)	Full Water	Full Water	Full Water	Full Water	1	1	1	1
DESIGN TEMP.(°C)	Amb.	Amb.	Amb.	Amb.	Amb.	Amb.	Amb.	Amb.
MATERIAL/TYPE	CS+Epoxy/Gravity	RC/Rectangular	RC/Rectangular	RC/Rectangular	SCS/Centri. Horiz.	SCS/Centri. Horiz.	SCS/Centri. Horiz.	SCS/Centri. Horiz.

JICA	Chck	Tech	Appr						
Sign									
Date									
CHSL	Dsgn	Chck	Appr						
Sign				Rev	Description	Dsgn	Chck	Appr	Date
Date					REVISION				

CLIENT	JAPAN INTERNATIONAL COOPERATION AGENCY INDUSTRIAL DEVELOPMENT STUDY DIVISION
CONSULTANT	CHIYODA DAMES & MOORE CO. CHIYODA CORPORATION
PROJECT	THE STUDY ON INDUSTRIAL WASTE WATER POLLUTION CONTROL IN THE ARAB REPUBLIC OF EGYPT
TITLE	FOR EGYPTIAN IRON & STEEL CO. ENGINEERING FLOW DIAGRAM FOR W.W.T. DEMONSTRATION PLANT(3/6)
ISSUED DATE	SCALE: None
DWG NO	D-BD-16-05 REV. 0

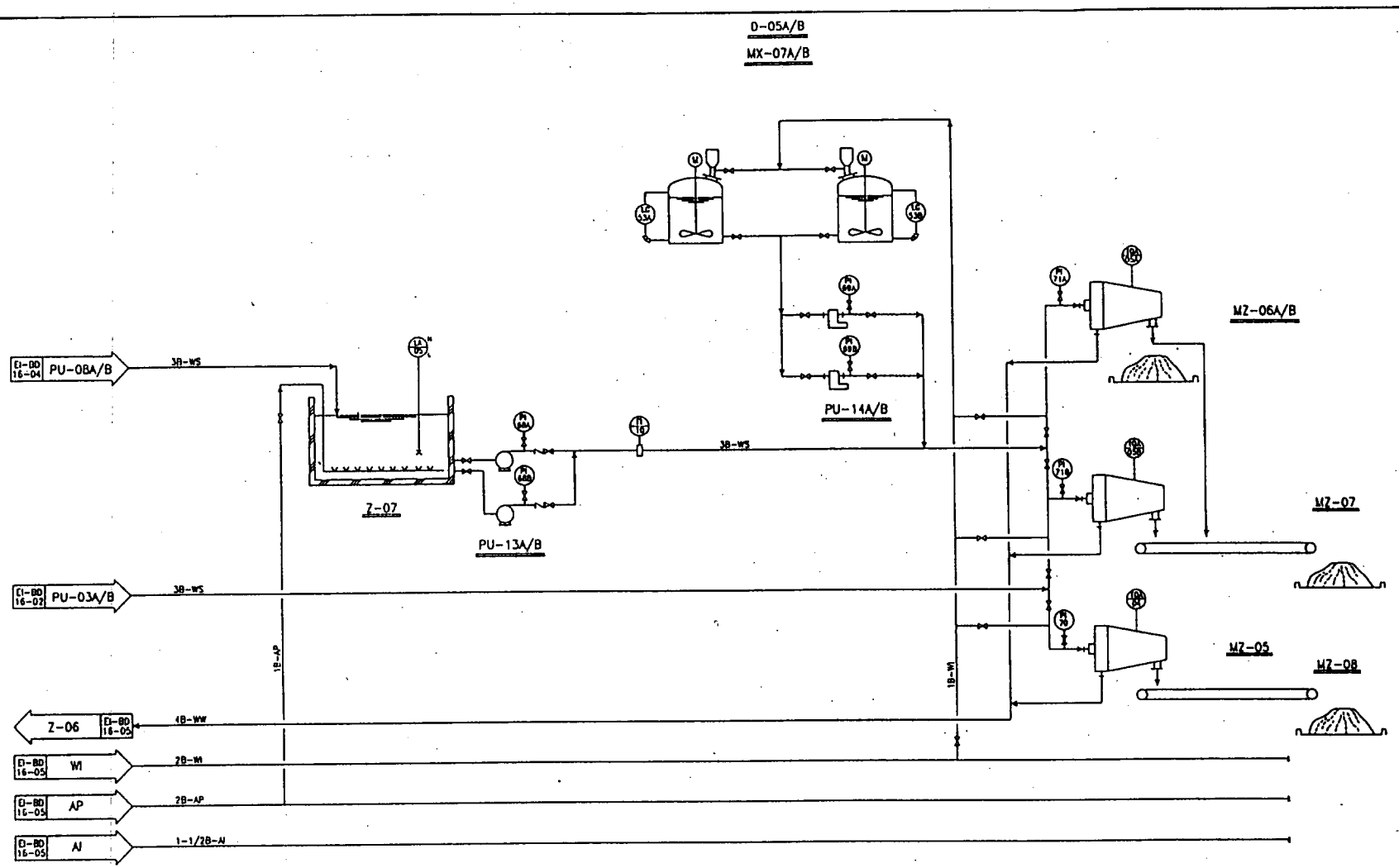

ITEM No.	D-05A/B	MX-07A/B	Z-07	PU-13A/B	PU-14A/B	MZ-05	MZ-06A/B	MZ-07	MZ-08
SERVICE	Polymer B Drum	Ptymer B Mixer	Sludge Pit	Sludge Pump	Polymer B Pump	No.1 Centrifuge	No.2 Centrifuge	No.1 Belt Conveyer	No.2 Belt Conveyer
SIZE(m)	2.5mtDx3.5mH	2.2kW, L=3.0m	5mWx6.5mLx2.5mH	$35m^3/hx15mHx2.2kW$	25L/minx0.5MPax0.75kW	$30m^3/hx55kWx3000rpm$	$30m^3/hx55kWx3000rpm$	150kg/min,2.2kW,L=6m	50kg/min,0.75kW,L=6m
DESIGN PRESS(MPa)	Full Water	Full Water	Full Water	1	1	1	1	1	1
DESIGN TEMP.(°C)	Amb.	Amb.	Amb.	Amb.	Amb.	Amb.	Amb.	Amb.	Amb.
MATERIAL/TYPE	CS/Cylindrical,Verti.	SUS/Vertical	RC/Rectangular	SCS/Centri. Horiz.	SCS/Diaphragm	SCS/Horizontal	SCS/Horizontal	SCS/Horizontal	SCS/Horizontal

JICA	Chck	Tech	Appr						
Sign									
Date									
CHSL	Dsgn	Chck	Appr						
Sign				Rev	Description	Dsgn	Chck	Appr	Date
Date					REVISION				

CLIENT	JAPAN INTERNATIONAL COOPERATION AGENCY INDUSTRIAL DEVELOPMENT STUDY DIVISION
CONSULTANT	CHIYODA DAMES & MOORE CO. CHIYODA CORPORATION
PROJECT	THE STUDY ON INDUSTRIAL WASTE WATER POLLUTION CONTROL IN THE ARAB REPUBLIC OF EGYPT
TITLE	FOR EGYPTIAN IRON & STEEL CO. ENGINEERING FLOW DIAGRAM FOR W.W.T. DEMONSTRATION PLANT(6/6)
ISSUED DATE	SCALE: None
DWG NO	D-BD-16-06 REV. 0

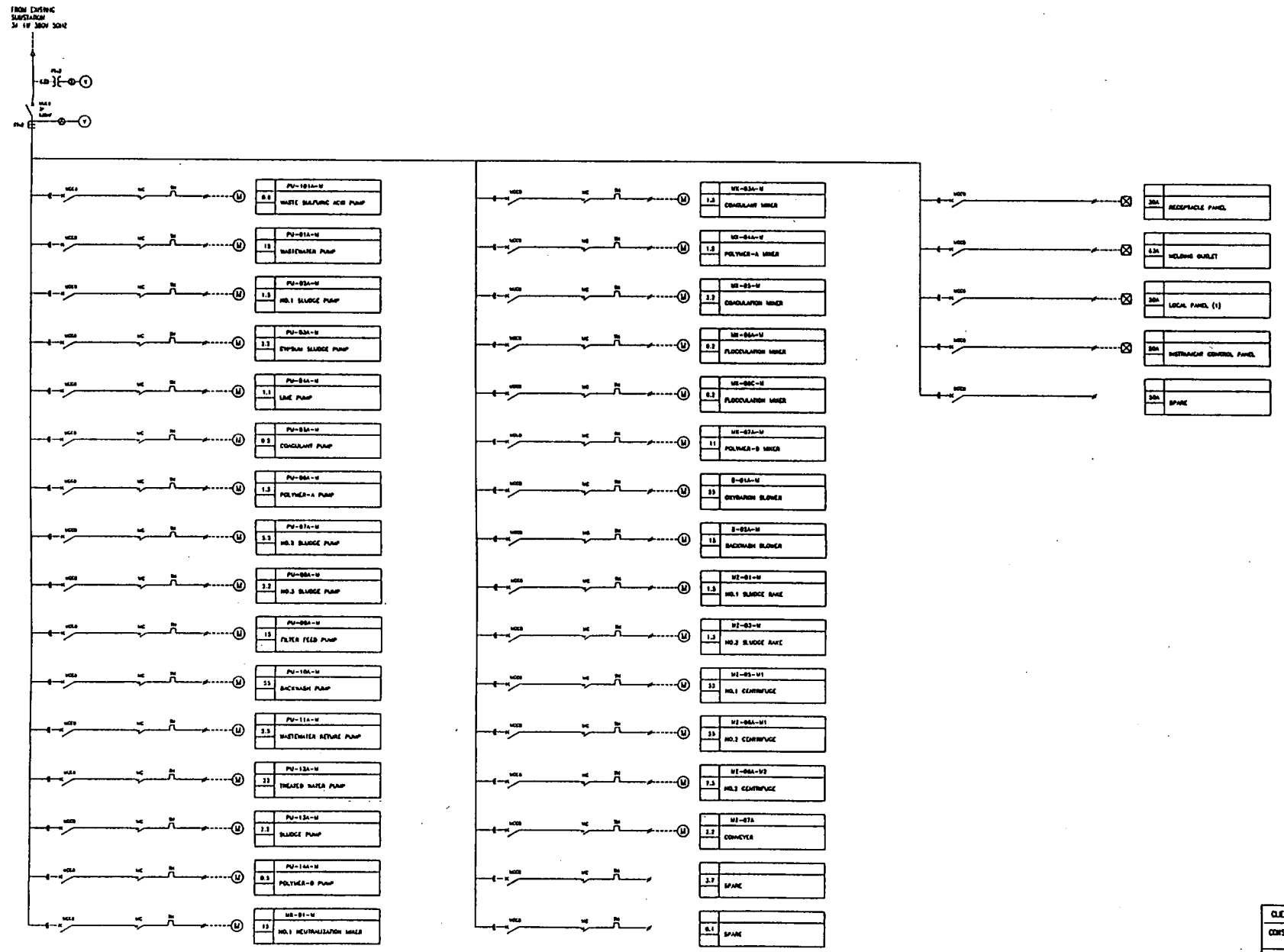

Rev.No.	Description	Dwn.	Chk.	Appr.	Date

REVISION

CLIENT	JAPAN INTERNATIONAL COOPERATION AGENCY
CONSULTANT	CHIYODA OAKES AND MOORE CO. CHIYODA CORP.
PROJECT	THE STUDY ON INDUSTRIAL WASTE WATER POLLUTION CONTROL IN THE ARAB REPUBLIC OF EGYPT
TITLE	FOR EGYPTIAN IRON & STEEL Co. SINGLE LINE DIAGRAM 380V MOTOR CONTROL BOARD (1/2)
ISSUED DATE	
DWG NO.	RC-CD-EG-001
SCALE	NONE
REV	0

JCA	Chk	Chk	Appr.
Sign			
Date			
Const.	Dwgs	Chk	Appr.
Sign			
Date			

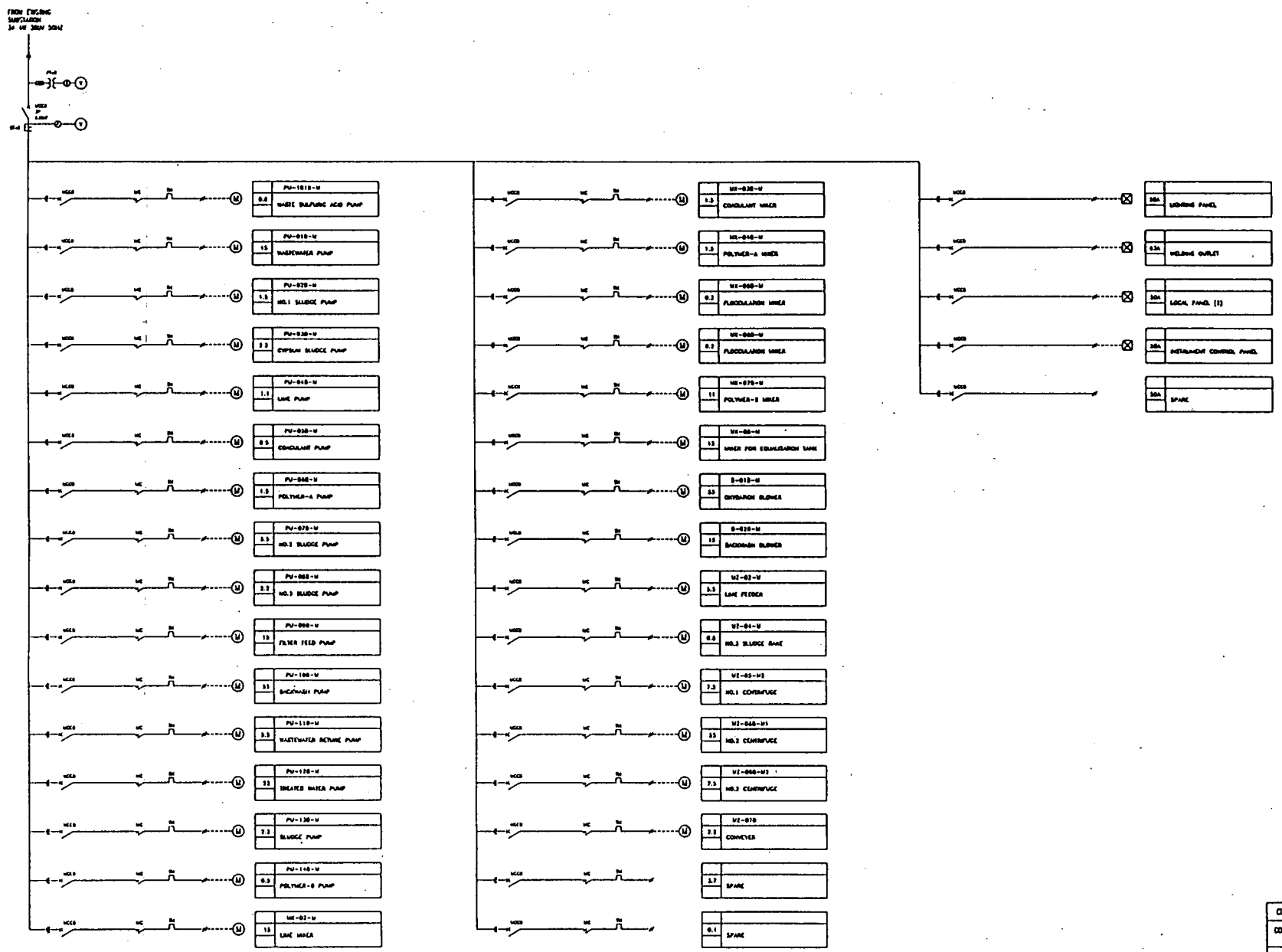

Symbol	Description	Drwn	Chck	Appr	Date

REVISION

CLIENT	JAPAN INTERNATIONAL COOPERATION AGENCY
CONSULTANT	CHIYODA OAKES AND MOORE CO. CHIYODA CORP.
PROJECT	THE STUDY ON INDUSTRIAL WASTE WATER POLLUTION CONTROL IN THE ARAB REPUBLIC OF EGYPT
TITLE	FOR EGYPTIAN IRON & STEEL Co. SINGLE LINE DIAGRAM 380V MOTOR CONTROL BOARD (2/2)

JICA	Chck	Chck	Appr
Sign			
Date			
Consul.	Drwn	Chck	Appr.
Sign			
Date			

ISSUED DATE		SCALE	NONE
DWG NO.	RC-CD-60-002	REV.	0

CONFIGURATION OF ELECTRICAL & INSTRUMENTATION SYSTEM FOR DEMONSTRATION PLANT

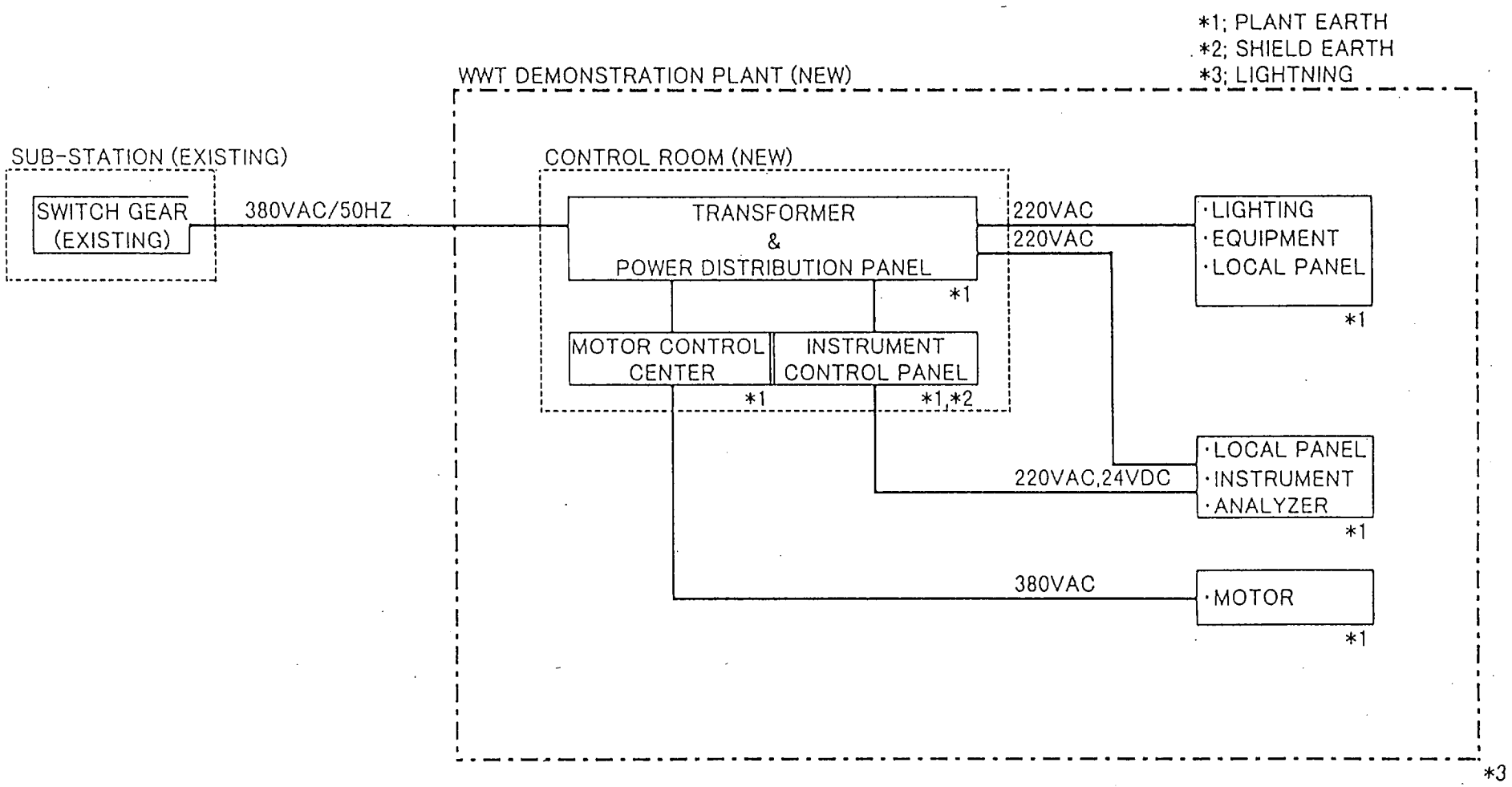

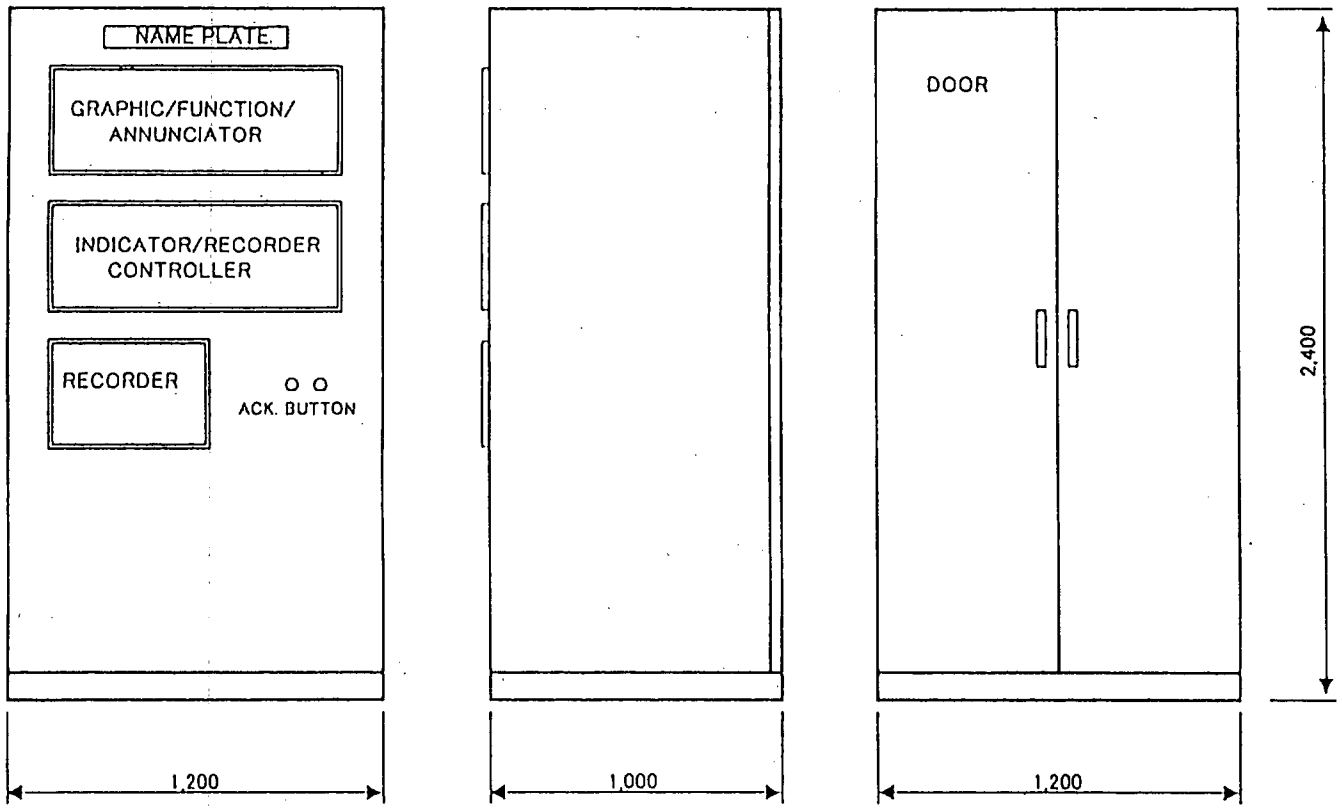

FRONT VIEW　　SIDE VIEW　　REAR VIEW

PANEL SPECIFICATION
1. SELF STANDING TYPE FOR INDOOR
2. STRUCTURE : 3.2MM STEEL
3. COLOR : YELLOW GREEN
4. CABLE ENTRY : BOTTOM

CONTROL PANEL OUTLINE FOR DEMONSTRATION PLANT
(SCALE : NONE)
(UNIT: MM)

JICA	Chck	Tech.	Appr						
Sign									
Date									
CNSLT	Dsgn	Chck	Appr						
Sign				Re	Descri	Dsgn	Chc	Appr	Date
Date				REVISION					

CLIENT	JAPAN INTERNATIONAL COOPERATION AGENCY INDUSTRIAL DEVELOPMENT STUDY DIVISION
CONSULTANT	CHIYODA DAMES & MOORE CO. CHIYODA CORPORATION
PROJECT	THE STUDY ON INDUSTRIAL WASTE WATER POLLUTION CONTROL IN THE ARAB REPUBLIC OF EGYPT
TITLE	FOR EGYPTIAN IRON AND STEEL CO. CONTROL PANEL OUTLINE FOR W.W.T. DEMONSTRATION PLANT

ISSUED DATE		SCALE	NONE
DWG NO	IS - BD - 70 - 1	REV.	0

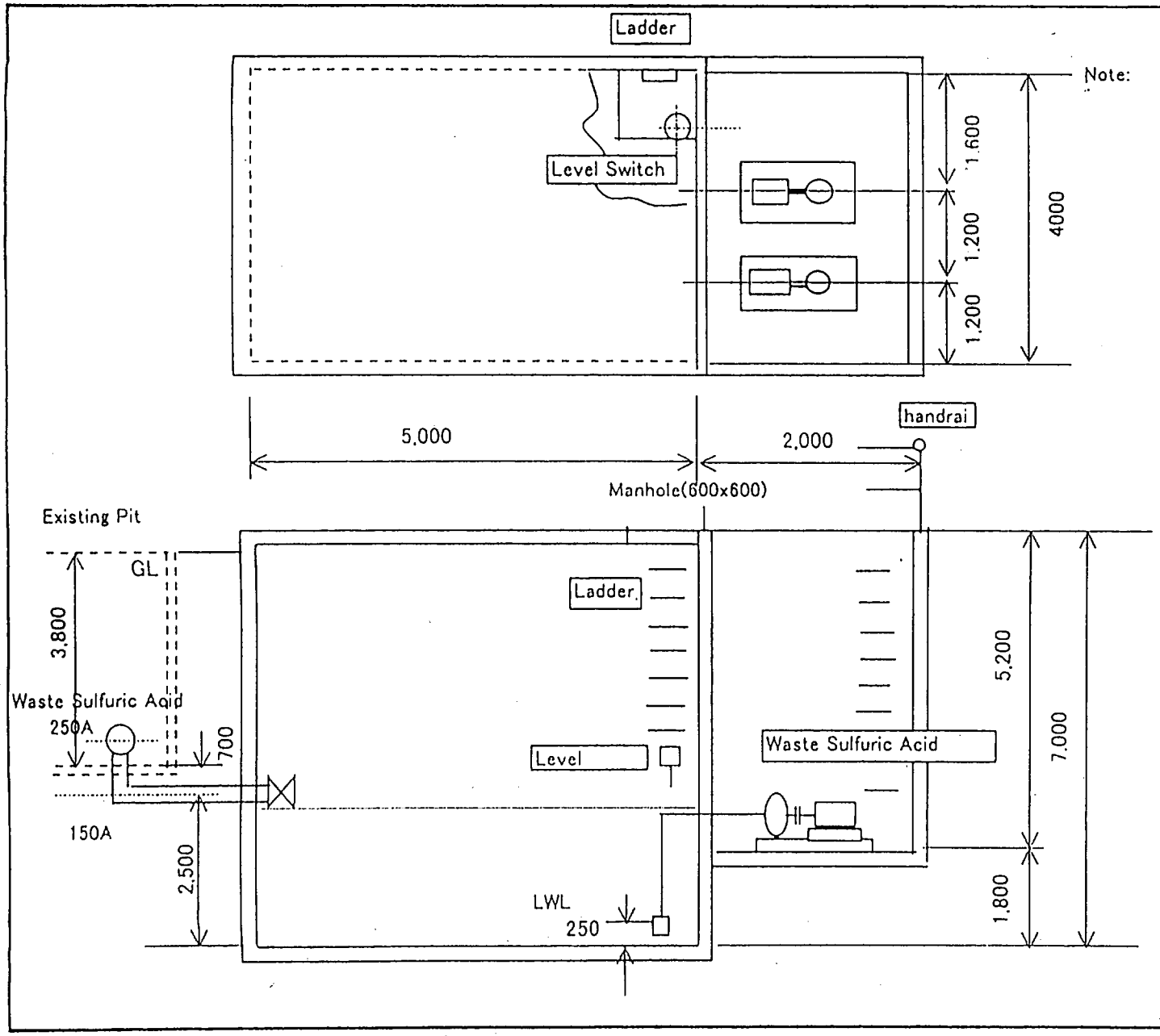

Note:

1. Materials= Reinforced Concrete
2. The Surface of inside wall shall be acid proof
3. Waste Sulfuric Acid Pumps and Level Switch are supplied by JICA.
4. The bottom of existing pipe tunnel should be confirmed at detail design.

CLIENT	JAPAN INTERNATIONAL COOPERATION AGENCY
TYTLE	FOR: EGYPTIAN IRON & STEEL CO WASTE SULFURIC ACID PIT FOR DEMONSTRATION PLANT
DWG. NO	IS-BD-51-SK01 REV.0

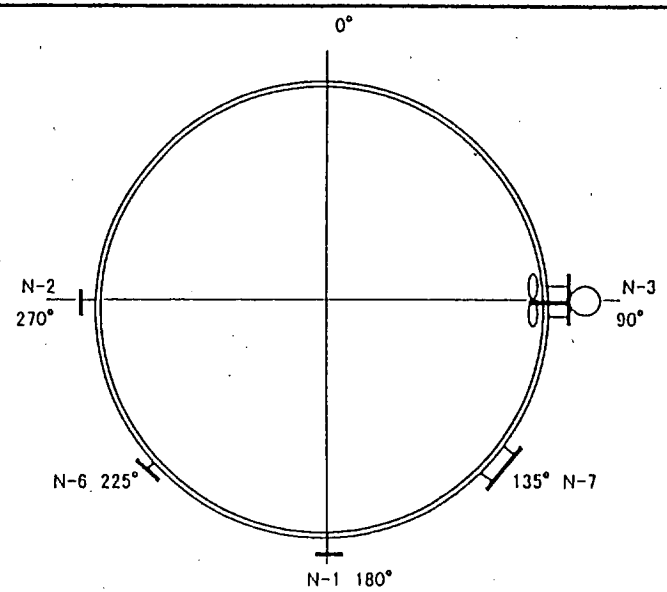

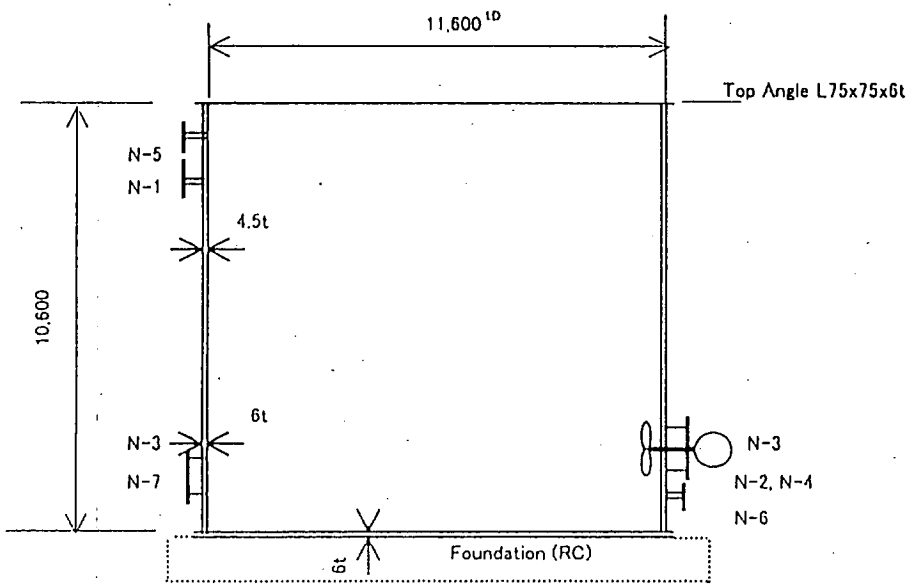

NOTE:
1)Type: Cylindrical Tank
(Open Top Tank)
2)Materials: Carbon Steel
inside Epoxy Coating
3)Accessories: Stairway
Inside Ladder
Air Bubbling
Tube

Loading Data
Weight Empty: 25.0ton
Full Water 1,150ton

No	Name	Size	No	Note
N-7	Manhole	500A	1	
N-6	Level Instrument	6B	1	
N-5	Over Flow	8B	1	
N-4	Drain	4B	1	
N-3	Side Mixer	24B	1	
N-2	Raw Water Outlet	8B	2	
N-1	Raw Water inlet	8B	1	

CLIENT	JAPAN INTERNATIONAL COOPERATION AGENCY
TYTLE	FOR: EGYPTIAN IRON & STEEL CO. 1000 m^3 EQUALIZATION TANK (T-01) WASTEWATER TREATMENT PLANT
DWG. NO	EI - BD - 22 - SK01 REV.0

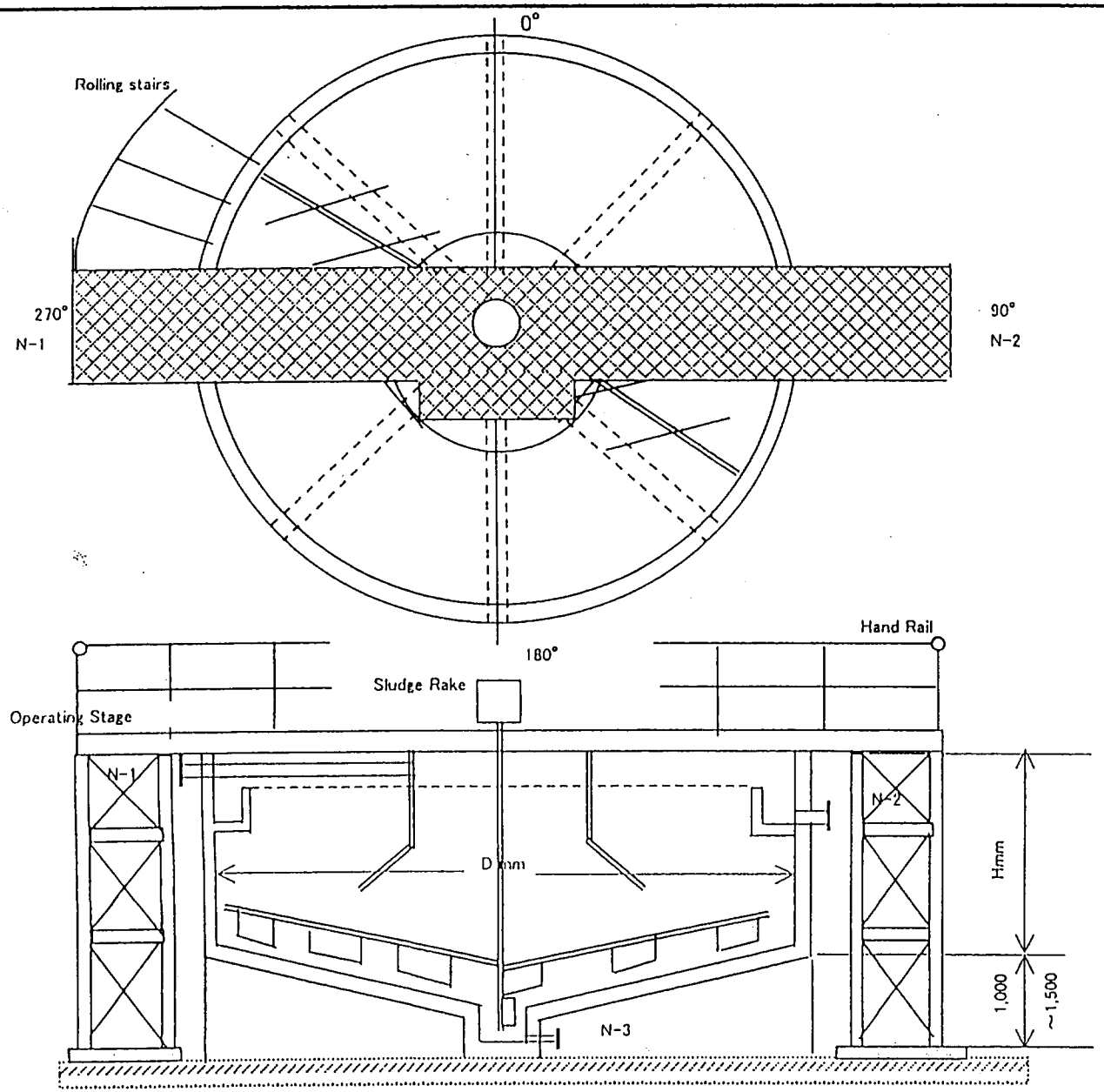

Materials: Carbon Steel/Epoxy coating
Accessories: Sludge Collection Rake
Operating Stage
Stairway

Z-01: No.1 Sedimentation Tank
13,000ID x 3,500H
Z-03: No.2 Sedimentation Tank
16,000ID x 3,000H

Material: RC

Nozzle No	Name	Size	No	Note
N-3	Sludge Outlet	4B	1	
N-2	Treated Water Outle	8B	1	
N-1	Raw Water inlet	8B	1	

CLIENT	JAPAN INTERNATIONAL COOPERATION AGENCY
TYTLE	FOR: EGYPTIAN IRON & STEEL CO. NO.1/NO.2 SEDIMENTATION BASIN (Z-01/03) WASTEWATER TREATMENT PLANT
DWG. NO	EI - BD - 50 - SK01 REV.0

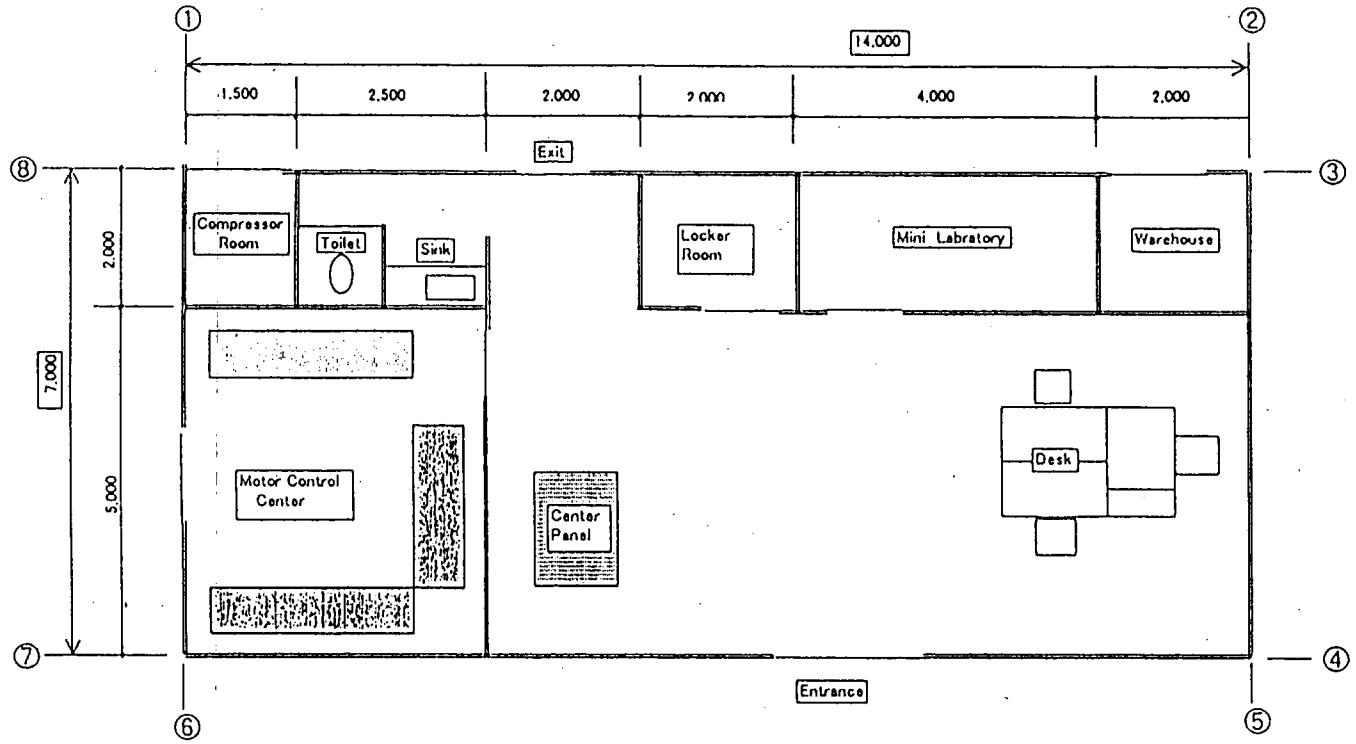

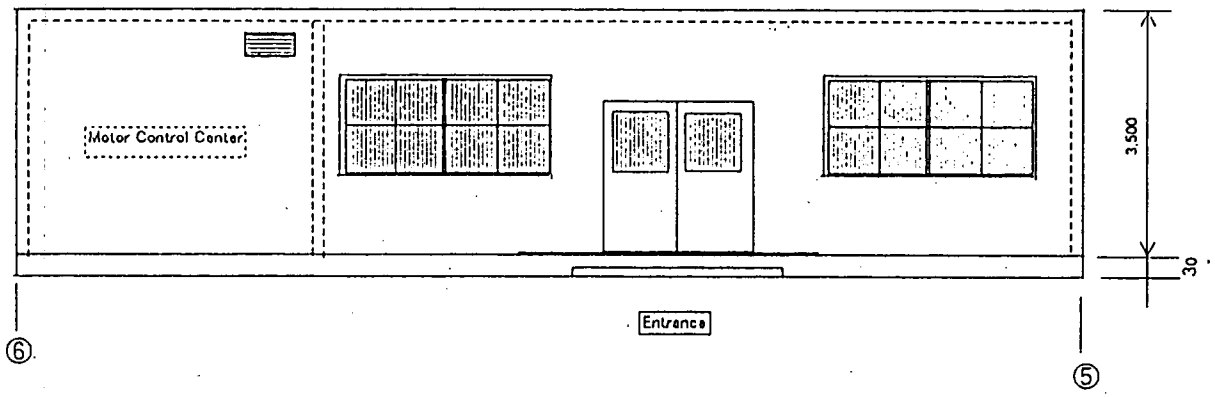

JICA	Chck	Tech	Appr						
Sign									
Date									
CHS	Dsgn	Chck	Appr						
Sign				Rev	Description	Dsgn	Chck	Appr	Date
Date									

CLIENT	JAPAN INTERNATIONAL COOPERATION AGENCY		
CONSULTANT	CHIYODA DAMES & MOORE CO. CHIYODA CORPORATION		
PROJECT	THE STUDY ON INDUSTRIAL WASTE WATER POLLUTION CONTROL IN THE ARAB REPUBLIC OF EGYPT		
TITLE	FOR Nominated Factory W.W.T Cotrol Room		
ISSUED		SCALE	None
DWG	00-BD-56-01	REV	0

EQUIPMENT LIST for Egyptian Iron and Steel Co.

Doc. No. EI-BD-L01-(1/4)
CLIENT :Japan International Cooperation Agency
PROJECT :The Study on Ind. W. W. Pollution Control
PLANT :W.W.T. Demonstration Plant
WASTE W. :Acid Wash Water/Waste Sulfuric Acid

REV	1	2	3	MADE	
BY				CKD	
APVE				APVE	
DATE				DATE	

Equipment NO.	Service	No. Req'd	Type of Equipment	Remarks
T-01	Equalization Tank	1	Open Top Tank	Carbon Steel/Resin
			1,000 m^3, 11.6mIDx 10.6mH	Lining
T-02	No.1 Neutralization Tank	1	Circular, Vertical	Carbon Steel/Resin
			4.5mIDx 6.2mH	Lining
T-03	2nd Neutralization Tank	1	Rectangular, Vertical	Carbon Steel/Resin
			247m^3, 8.2mIDx5.2mH	Lining
T-04	Coagulation Tank	1	Cylindrical, Vertical	Carbon Steel/Resin
			3.0mIDx3.0mH	Lining
T-05	Sludge Thickener	1	Circular	Carbon Steel/Resin
			8.0mIDx4.0mH	Lining
D-01	Lime Hopper	1	Cylindrical, Vertical	Carbon Steel
			23m^3, 3.0mIDx4.0mH	
D-02	Lime Drum	1	Circular, Vertical	Carbon Steel
			25m^3, 3.6mIDx3.6mH	
D-03A/B	Coagulant Drum	2	Circular, Vertical	CS+H.R.Lining
			6m^3, 2mIDx2.5mH	
D-04A/B	Polymer A Drum	2	Cylindrical, Vertical	Carbon Steel
			6m^3, 2.0mIDx2.5mH	
D-05A/B	Polymer B Drum	2	Cylindrical, Horizontal	Carbon Steel
			9m^3, 2.5mIDx3.5mH	
F-01A/B/C	Sand Filter	3	90m^3/h, 4.0mIDx4.5mH	Carbon Steel/Epoxy
			Gravity Type	

NOTE:

EQUIPMENT LIST for Egyptian Iron and Steel Co.

Doc. No.	EI-BD-L01-(2/4)
CLIENT	:Japan International Cooperation Agency
PROJECT	:The Study on Ind. W. W. Pollution Control
PLANT	:W.W.T. Demonstration Plant
WASTE W.	:Acid Wash Water/Waste Sulfuric Acid

REV	1	2	3	MADE	
BY				CKD	
APVE				APVE	
DATE				DATE	

Equipment NO.	Service	No. Req'd	Type of Equipment	Remarks
Z-101	Waste Sulfuric Acid Pit	1	Rectangular, Underground	R.C.
			4.0mWx5.0mLx6.0mD	(out of Battery)
Z-01	No.1 Sedimentation Tank	1	Circular, Vertical	R.C.+Resin Lining
			13mIDx3.5mH	Lining
Z-02	Gypsum Pit	1	Rectangular	R.C.+Resin Lining
			6.5mWx8.0mLx3.5mH	
Z-03	No.2 Sedimentation Tank	1	Circular	R.C.+Resin Lining
			16.0mIDx3.0mH	Lining
Z-04	Clarified Water Pit	1	Rectangular, Aboveground	R.C.
			$81m^3$, 5.0mWx6.5mLx3.0mH	
Z-05	Treated Water Pond	1	Rectangular, Aboveground	R.C.
			$91m^3$, 6.5mWx6.5mLx3.0mH	
Z-06	Waste Water Pit	1	Rectangular, Aboveground	R.C.
			$130m^3$, 6.5mWxm12.0Lx3.0mH	
Z-07	Sludge Pit	1	Rectangular, Aboveground	R.C.
			$61m^3$, 5.0mWx6.5mLx2.5mH	
PU-XXX	Acid Washwater Pump	3	Centri., Horizontal	SCS(Existing)
			$4.8m^3$/minx57mHx100kW	
PU-101A/B	Waste Sulfuric Acid Pump	2	Centri. Horizontal	SCS(out of battery)
			$2.0m^3$/hx25mHx0.75kW	
PU-01A/B	Wastewater Pump	2	Centri., Horizontal	SCS
			$200m^3$/hx10mHx15kW	
PU-02A/B	No.1 Sludge Pump	2	Centri., Horizontal	SCS
			$24m^3$/hx15mHx1.5kW	
PU-03A/B	Gypsum Sludge Pump	2	Centri., Horizontal	SCS
			$30m^3$/hx15mHx2.2kW	
PU-04A/B	Lime Pump	2	Centri, Horizontal	CI
			$20m^3$/hx15mHx~~2~~kW 1.5	
PU-05A/B	Coagulant Pump	2	Recipro., Plunger	SCS
			1.0L/minx0.5MPax0.4kW	
PU-06A/B	Polymer A Pump	2	Recipro., Diaphragm	SCS/Teflon
			10L/min*0.5MPax0.75kW	

NOTE:

EQUIPMENT LIST for Egyptian Iron and Steel Co.

Doc. No. EI-BD-L01-(3/4)

CLIENT :Japan International Cooperation Agency

PROJECT :The Study on Ind. W. W. Pollution Control

PLANT :W.W.T. Demonstration Plant

WASTE W. :Acid Wash Water/Waste Sulfuric Acid

REV	1	2	3	MADE	
BY				CKD	
APVE				APVE	
DATE				DATE	

Equipment NO.	Service	No. Req'd	Type of Equipment	Remarks
PU-07A/B	No.2 Sludge Pump	2	Centri., Horizontal	SCS
			$70m^3$/hx15mHx5.5kW	
PU-08A/B	No.3 Sludge Pump	2	Centri., Horizontal	SCS
			$35m^3$/hx15mHx2.2kW	
PU-09AB	Filter Feed Pump	2	Centri, Horizontal	SCS
			$190m^3$/hx15mHx15kW	
PU-10A/B	Backwash Pump	2	Centri, Horizontal	SCS
			$540m^3$/hx12mHx55kW	
PU-11A/B	Wastewater Return Pump	2	Centri. Horizontal	SCS
			$70m^3$/hx15mHx5.5kW	
PU-12A/B	Treated Water Pump	2	Centri. Horizontal	SCS
			$190m^3$/hx50mHx22kW	
PU-13A/B	Sludge Pump	2	Centri. Horizontal	SCS
			$35m^3$/hx15mHx2.2kW	
PU-14A/B	Polymer B Pump	2	Recipro. Diaphragm	SCS/Teflon
			25L/minx0.5MPax0.75kW	
MX-01	No.1 Neutralization Mixer	1	Vertical	SUS
			3.7kW, L=6.2m	
MX-02	Lime Mixer	1	Vertical	SUS
			3.7kW, L=3.0m	
MX-03A/B	Coagulant Mixer	2	Vertical	SUS
			1.5kW, L=2.5m	
MX-04A/B	Polymer A Mixer	2	Vertical	SUS
			1.5kW, L=2.5m	
MX-05	Coagulation Mixer	1	Vertical	SUS
			2.2kW, L=3.5m	
MX-06A/B/C/D	Flocculation Mixer	4	Vertical	SUS
			0.2kW, L=2.0m	

NOTE:

EQUIPMENT LIST for Egyptian Iron and Steel Co.

Doc. No. EI-BD-L01-(4/4)

CLIENT :Japan International Cooperation Agency

PROJECT :The Study on Ind. W. W. Pollution Control

PLANT :W.W.T. Demonstration Plant

WASTE W. :Acid Wash Water/Waste Sulfuric Acid

REV	1	2	3	MADE	
BY				CKD	
APVE				APVE	
DATE				DATE	

Equipment NO.	Service	No. Req'd	Type of Equipment	Remarks
MX-07A/B	Polymer B Mixer	2	Vertical	SUS
			2.2kW, L=3.0m	
MX-08	Equalization Tank Mixer	1	Side	SUS
			3.7kW	
B-01A/B	Oxidation Blower	2	Root	CI
			$4Nm^3$/min*5mH*11kW	
B-02AB	Backwash Blower	2	Root	CI
			$5Nm^3$/min*5mH*15kW	
MZ-01	No.1 Sludge Rake	1	Center Driven	C.S.+Resin Lining
			1.5kW, D=13mφ, L= 4.5m	
MZ-02	Lime Feeder	1	Disc Type, 2.2kW	C.S.
			650kg/h	
MZ-03	No.2 Sludge Rake	1	Center Driven	C.S.+Resin Lining
			1.5kW, D= 15mφ, L=4.5m	
MZ-04	No.3 Sludge Rake	1	Center Driven	C.S.+Resin Lining
			0.75kW, D= 8mφ, L=4.5m	
MZ-05	No.1 Centrifuge	1	Horizontal	SUS
			$30m^3$/hx55kWx3,000rpm, +7.5kw	
MZ-06A/B	No.2 Centrifuge	2	Horizontal	SUS
			$30m^3$/hx55kWx3,000rpm, +7.5kw	
MZ-07	No.1 Belt Conveyer	1	Horizontal	SUS
			150kg/minx2.2kW, L=6m	
MZ-08	No.2 Belt Conveyer	1	Horizontal	SUS
			50kg/minx0.75kW, L=6m	
C-01	AI Compressor	1	Baby Compressor	Oil Free,
			200L/minx0.7MPax0.75kW	

INSTRUMENT LIST for EGYPTIAN IRON AND STEEL CO.

Doc. No. EI-BD-L2-(2/4)

CLIENT :Japan International Cooperation Agency

PROJECT :Study on Industrial W. W. Pollution Control

PLANT :W. W. T. DEMONSTRATION PLANT

WASTE W. : Acid Wash Water/Waste Sulfuric Acid

REV	1	2	3	MADE	
BY				CHKD	
APVE				APVE	
DATE				DATE	

Instrument NO.	Service	No. Req'd	Type of Instrument	Remarks
FI-52	Flow Indicator	1	Electro-Magretic	WS, Gypsum Draw-off
			3B, $50m^3/h$	
FIC-53	Flow Controler	1	Orifice	WI, Inlet of D-02
			1-1/2B, $30m^3/h$	
FI-54	Flow Indicator	1	Olifice	AP, Deli. of B-01A/B
			2B, $4Nm^3/min$	
FI-55	Flow Indicator	1	Electro-magnetic	WS, Deli. of PU-07A/B
			4B, $90m^3/h$	
FI-56	Flow Indicator	1	Orifice	WW, Deli of PU-09A/B
			8B, $200m^3/h$	
FI-57	Flow Indicator	1	Orifice	WW, Deli of PU-10A/B
			10B, $600m^3/h$	
FI-58	Flow Indicator	1	Orifice	AP, Deli of B-02A/B
			3B, $5Nm^3/min$	
LIA-01	Level Indicator/w	1		WW, T-01
	Alarm		H, L, LL	C. P.
LA-02	Level Alarm	1		WS, Z-02
			H, L	C. P.
LA-03	Level Alarm	1		WW, Z-04
			H, L	C. P.
LA-04ABC	Level Alarm	1	Electrode	WW, F-01ABC
			H	C. P.
LA-05	Level Alarm	1	Float	WS, Z-07
			H, L	C. P.
LA-101	Level Alarm	1	Float	Max. 18%H_2SO_4, Z-101
			H, L	C. P.
LS-51	Level Switch	1		CH, CaO Pouder, D-01
LC-52	Level Controler	1	Electrode	CH, D-02
LS-53	Level Switch	1	Float	WW, Z-05
LS-54	Level Switch	1	Float	WW, Z-06

NOTE: C. P. =Center Panel Mount

INSTRUMENT LIST for EYPTIAN IRON AND STEEL CO.

Doc. No. EI-BD-L2-(1/4)

CLIENT :Japan International Cooperation Agency

PROJECT :Study on Industrial W. W. Pollution Control

PLANT :W. W. T. DEMONSTRATION PLANT

WASTE W. Acid Wash Water/Waste Sulfuric Acid

REV	1	2	3	MADE	
BY				CHKD	
APVE				APVE	
DATE				DATE	

Instrument NO.	Service	No. Req'd	Type of Instrument	Remarks
AR-01	pH Analyzer	1	Electrode, inline	WW, Inlet of T-02
			pH 0-14	C. P.
AR-02	pH Analyzer	1	Electrode	WW, Outlet of T-02
			pH 0-14	C. P.
AR-03	pH Analyzer	1	Electrode	WW, Outlet T-03
			pH 0-14	C. P.
FI-01	Flow Indicator	1	Orifice	Inlet of T-01, C. P.
			8B, 200m^3/h	Max. 1. 2%H_2SO_4
FI-02	Flow Indicator	1	Orifice	Inlet of T-01, C. P.
			1B, 5m^3/h	Max. 18%H_2SO_4
FRCA-03	Flow Controler/with	1	Orifice,	WW, Deli. of PU-01A/B
	Recorder, Alarm		8B, 200m^3/h	C. P.
FIC-04	Flow Controler	1	Electro-magnetic	WW, Deli. of PU-01A/B
			8 B, 200 m^3/h	C. P.
FI-05	Flow Indicator	1	Electro-magnetic	WS, Deli. of PU-03A/B
			3B, 50m^3/h	C. P.
FI-06	Flow Indicator	1	Electro-magnetic	WS, Return Sludge to T-03
			3B, 50m^3/h	C. P.
FI-07	Flow Indicator	1	Electro-magnetic	WS, Deli. of PU-08A/B
			3B, 50m^3/h	C. P.
FI-08ABC	Flow Indicator	3	Orifice,	WW, Inlet of F-01ABC
			6B, 90m^3/h	C. P.
FI-09	Flow Recorder	1	Orifice	WW, Deli. of PU-12A/B
			8B, 200m^3/h	C. P.
FI-10	Flow Indicator	1	Electro-magnetic	WS, Deli. of PU-13A/B
			3B, 50m^3/h	
FS-51	Flow Integrator	1	Orifice	WI Intake Line
			1-1/2B, 100,000m^3	

NOTE: C. P. =Center Panel Mount

INSTRUMENT LIST for EGYPTIAN IRON and STEEL CO.

Doc. No. EI-BD-L2-(3/4)

CLIENT :Japan International Cooperation Agency

PROJECT :Study on Industrial W. W. Pollution Control

PLANT :W.W.T. DEMONSTRATION PLANT

WASTE W. : Acid Wash Water/Waste Sulfuric Acid

REV	1	2	3	MADE	
BY				CHKD	
APVE				APVE	
DATE				DATE	

Instrument NO.	Service	No. Req'd	Type of Instrument	Remarks
TQA-01	Torque Alarm	1		MZ-01
			Over torque-H	
TQA-02	Torque Alarm	1		MZ-03
			Over torque-H	
TQA-03	Torque Alarm	1		MZ-04
			Over torque-H	
TQA-04	Torque Alarm	1		MZ-05
			Over torque-H	
TQA-05AB	Torque Alarm	2		MZ-06AB
			Over torque-H	
SQ-01	Filter Backwash	1		F-01ABC
	Sequence			Local Panel
LG-51AB	Level Gage	2	Tubular, L=2.0m	$Al_2(SO_4)_3$, D-03A/B
LG-52AB	Level Gage	2	Tubular, L=2.0m	Polymer A, D-04A/B
LG-53AB	Level Gage	2	Tubular, L=3.0m	Polymer B, D-05A/B
PI-51	Pressure Indicator	1	Buldon Tube, 0-0.5MPa	WI, B/L
PI-52	Pressure Indicator	1	Buldon Tube, 0-0.5MPa	AP, B/L
PI-53	Pressure Indicator	1	Buldon Tube, 0-0.5MPa	AI, B/L
PI-54A/B	Pressure Indicator	2	Buldon Tube, 0-0.5MPa	WW, PU-01A/B
PI-55A/B	Pressure Indicator	2	Buldon Tube, 0-0.5MPa	WS, PU-02A/B
PI-56A/B	Pressure Indicator	2	Buldon Tube, 0-0.5MPa	WS, PU-03A/B
PI-57A/B	Pressure Indicator	2	Diaphragm, 0-0.5MPa	WS, PU-04A/B
PI-58A/B	Pressure Indicator	2	Buldon Tube, 0-0.5MPa	CH, PU-05A/B
PI-59A/B	Pressure Indicator	2	Buldon Tube, 0-0.5MPa	CH, PU-06A/B
PI-60A/B	Pressure Indicator	2	Buldon Tube, 0-0.5MPa	AP, B-01A/B
PI-61A/B	Pressure Indicator	2	Buldon Tube, 0-0.5MPa	WS, PU-07A/B
PI-62A/B	Pressure Indicator	2	Buldon Tube, 0-0.5MPa	WW, PU-08A/B
PI-63A/B	Pressure Indicator	2	Buldon Tube, 0-0.5MPa	WW, PU-09A/B

NOTE: C.P.=Center Panel Mount
L.P.=Local Panel Mount

INSTRUMENT LIST for EGYPTIAN IRON and STEEL CO.

Doc. No. EI-BD-L2-(4/4)

CLIENT :Japan International Cooperation Agency

PROJECT :Study on Industrial W. W. Pollution Control

PLANT :W.W.T. DEMONSTRATION PLANT

WASTE W. : Acid Wash Water/Waste Sulfuric Acid

REV	1	2	3	MADE	
BY				CHKD	
APVE				APVE	
DATE				DATE	

Instrument NO.	Service	No. Req'd	Type of Instrument	Remarks
PI-64A/B	Pressure Indicator	2	Buldon Tube, 0-0.5MPa	WW, PU-11A/B
PI-65A/B	Pressure Indicator	2	Buldon Tube, 0-0.5MPa	WW, PU-10A/B
PI-66A/B	Pressure Indicator	2	Buldon Tube, 0-0.5MPa	AP, B-02A/B
PI-67A/B	Pressure Indicator	1	Buldon Tube, 0-0.5MPa	WW, PU-12A/B
PI-68A/B	Pressure Indicator	2	Buldon Tube, 0-0.5MPa	WS, PU-13A/B
PI-69A/B	Pressure Indicator	2	Buldon Tube, 0-0.5MPa	CH, PU-14A/B
PI-70A/B	Pressure Indicator	1	Buldon Tube, 0-0.5MPa	WS, MZ-05
PI-71A/B	Pressure Indicator	2	Buldon Tube, 0-0.5MPa	WS, MZ-06A/B

NOTE: C.P.=Center Panel Mount

L.P.=Local Panel Mount

INDUCTION MOTOR LIST

Doc. No. EI-BD-60-L1
CLIENT : Japan International Cooperation Agency
PROJECT : The Study on Industrial Waste Water Plant
PLANT : Egyptian Iron and Steel Co.
WASTE W. : Acid Washwater/Spent Sulfuric Acid

REV	1	2	3	MADE	
BY				CKD	
APVE				APVE	
DATE				DATE	

Motor No.	Service	No. Required	Type	Output Estimate	Output Final	Speed Chrst	Revolution	Pole / r.p.m	V-Φ-Hz	Time Rating	Starting Currrent	Starting Torque	Insulation	Enclose.	Cable	Mounting	Drive	Bearing	Acc.	Location	Color Finish	Remarks
PU-101A/B-M	Waste Sulfuric Acid Pump	2	SC	0.8		C	CW	3 / 1500	380-3-50	C				TEFC		H	D			OD		
PU-01A/B-M	Wastewater Pump	2	SC	15		C	CW	3 / 1500	380-3-50	C				TEFC		H	D			OD		
PU-02A/B-M	No.1 Sludge Pump	2	SC	1.5		C	CW	3 / 1500	380-3-50	C				TEFC		H	D			OD		
PU-03A/B-M	Gypsum Sludge Pump	2	SC	2.2		C	CW	3 / 1500	380-3-50	C				TEFC		H	D			OD		
PU-04A/B-M	Lime Pump	2	SC	1.1		C	CW	3 / 1500	380-3-50	C				TEFC		H	D			OD		
PU-05A/B-M	Coagulant Pump	2	SC	0.4		C	CW	3 / 1500	380-3-50	C				TEFC		H	G			OD		
PU-06A/B-M	Polymer A Pump	2	SC	0.8		C	CW	3 / 1500	380-3-50	C				TEFC		H	G			OD		
PU-07A/B-M	No.2 Sludge Pump	2	SC	5.5		C	CW	3 / 1500	380-3-50	C				TEFC		H	D			OD		
PU-08A/B-M	No.3 Sludge Pump	2	SC	2.2		C	CW	3 / 1500	380-3-50	C				TEFC		H	D			OD		
PU-09A/B-M	Filter Feed Pump	2	SC	15		C	CW	3 / 1500	380-3-50	C				TEFC		H	D			OD		
PU-10A/B-M	Backwash Pump	2	SC	55		C	CW	3 / 1500	380-3-50	C				TEFC		H	D			OD		
PU-11A/B-M	Wastewater Return Pump	2	SC	5.5		C	CW	3 / 1500	380-3-50	C				TEFC		H	D			OD		
PU-12A/B-M	Treated Water Pump	2	SC	22		C	CW	3 / 1500	380-3-50	C				TEFC		H	D			OD		
PU-13A/B-M	Sludge Pump	2	SC	2.2		C	CW	3 / 1500	380-3-50	C				TEFC		H	D			OD		
PU-14A/B-M	Polymer B Pump	2	SC	0.8		C	CW	3 / 1500	380-3-50	C				TEFC		H	G			OD		
MX-01-M	No.1 Neutralization Mixer	1	SC	3.7		C	CW	3 / 1500	380-3-50	C				TEFC		H	G			OD		
MX-02-M	Lime Mixer	1	SC	3.7		C	CW	3 / 1500	380-3-50	C				TEFC		V	G			OD		
MX-03A/B-M	Coagulant Mixer	2	SC	1.5		C	CW	3 / 1500	380-3-50	C				TEFC		V	G			OD		
MX-04A/B-M	Polymer A Mixer	2	SC	1.5		C	CW	3 / 1500	380-3-50	C				TEFC		V	G			OD		
MX-05-M	Coagulation Mixer	1	SC	2.2		C	CW	3 / 1500	380-3-50	C				TEFC		V	G			OD		
MX-06A/B/C/D-M	Flocculation Mixer	4	SC	0.2		C	CW	3 / 1500	380-3-50	C				TEFC		V	G			OD		
MX-07A/B-M	Polymer B Mixer	2	SC	2.2		C	CW	3 / 1500	380-3-50	C				TEFC		V	G			OD		
MX08-M	Mixer for Equalization Tank	1	SC	3.7		C	CW	3 / 1500	380-3-51	C				TEFC		V	G			OD		
B-01A/B-M	Oxydation Blower	2	SC	11		C	CW	3 / 1500	380-3-50	C				TEFC		H	V			OD		
B-02AB-M	Backwash Blower	2	SC	15		C	CW	3 / 1500	380-3-50	C				TEFC		H	V			OD		
MZ-01-M	No.1 Sludge Rake	1	SC	1.5		C	CW	3 / 1500	380-3-50	C				TEFC		V	G			OD		
MZ-02-M	Lime Feeder	1	SC	2.2		C	CW	3 / 1500	380-3-50	C				TEFC		H	G			OD		
MZ-03-M	No.2 Sludge Rake	1	SC	1.5		C	CW	3 / 1500	380-3-50	C				TEFC		V	G			OD		
MZ-04-M	No.3 Sludge Rake	1	SC	0.8		C	CW	3 / 1500	380-3-50	C				TEFC		V	G			OD		
MZ-05-M1	No.1 Centrifuge	1	SC	55		C	CW	3 / 1500	380-3-50	C				TEFC		H	G			OD		
MZ-05-M2	No.1 Centrifuge	1	SC	7.5		C	CW	3 / 1500	380-3-50	C				TEFC		H	G			OD		
MZ-06A/B-M1	No.2 Centrifuge	2	SC	55		C	CW	3 / 1500	380-3-50	C				TEFC		H	G			OD		
MZ-06A/B-M2	No.2 Centrifuge	2	SC	7.5		C	CW	3 / 1500	380-3-50	C				TEFC		H	G			OD		
MZ-07-M	Belt Conveyer	1	SC	2.2		C	CW	3 / 1500	380-3-50	C				TEFC		H	V			OD		
MZ-08-M	Belt Conveyer	1	SC	0.8		C	CW	3 / 1500	380-3-50	C				TEFC		H	V			OD		

Notes:

1. Type : SC = Squirrel Cage. W = Wound Rotor.
2. Speed : C = Constant. M = Multi. A = Adjustable. V = Varying.
3. Revolution Direction : Direction when viewed from coupling side.
   CW = Clockwise. CCW = Counter-Clockwise.
4. Voltage : Rated Voltage
5. Time Rating : C = Continuouse. ST = Short Time. P = Periodic.
6. Enclosure : TEFC = Totally-Enclosed Fan-Cooled.
   DR = Drip-Proof.
7. Cable(or Wire) : T = Top. B = Bottom. S = Side. H = Hub for conduit tube or flexible tube.
8. Mounting : H = Horizontal. V = Vertical
9. Drive : D = Direct. B = Belt. C = Chain. G = Gear.
10. Location : ID = Indoor. OD = Outdoor.

Phase 1 Study

Overall Schedule for Implementation of Demonstration Plant (Preliminary)

Dec. 11, 1999

Major Activities for Implementation	1999			2000												2001												2002					
	10	11	12	1	2	3	4	5	6	7	8	9	10	11	12	1	2	3	4	5	6	7	8	9	10	11	12	1	2	3	4	5	6
1 Preparatory Activities before Bid for Supply and Construction of Demonstration Plant																																	
1.1 Selection of Demonstration Factory	11/24'99 ○																																
1.2 Compilation of Detailed Design Package, including: - List of Materials and Equipment - List of Construction works																																	
1.3 Short Listing of Suppliers who can supply the Plant as a whole																																	
1.4 Short Listing of Construction Contractors in Egypt to be qualified by JICA																																	
1.5 Agreement for Implementation of Phase 2 Study between JICA and Egyptian Side																																	
1.6 Contract between JICA and Phase 2 Study Team																																	
2 Supply of the Plant																																	
2.1 Selection of the Plant Supplier by Competitive Bid																																	
2.2 Design Verification and Development by Supplier																																	
2.3 Procurement of Materials and Equipment by Supplier																																	
2.4 Manufacturing and Preassembling as necessary																																	
2.5 Inspection and Test before Shipment																																	
2.6 Shipping																																	
3 Construction of the Plant																																	
3.1 Selection of Construction Contractor by Qualification by JICA and Study Team																																	
3.2 Site Preparation and Temporary Facilities Installation																																	
3.3 Civil & Building Works: including Foundations, Concrete Basins, Control Room, Underground Piping, etc.																																	
3.4 Shop fabrication and installation of Locally procured Tanks, Structures, Pipes, etc.																																	
3.5 Unloading, Customs Clearance, Inland Transportation of Imported Mat'l & Eq																																	
3.6 Receiving, Storing																																	
3.7 Equipment Installation																																	
3.8 Piping																																	
3.9 Electrical																																	
3.10 Instrumentation																																	
3.11 Painting																																	
3.12 Precommissioning																																	
3.13 Mechanical Completion																																	
3.14 Commissioning																																	
4 Operation of the Plant																																	
4.1 Performance Test																																	
4.2 Operation and Demonstration																																	

DEMO-PLANT in EGYPTIAN IRON & STEEL CO. : ESTIMATE SUMMARY & DEMARCATION

(Base Case) 1999. 12. 15

ITEM	IBL		OBL		Demarcation (Eq. ¥1000)	
	Yen Portion (¥1000)	LE Portion (LE)	Yen Portion (¥1000)	LE Portion (LE)	Japanese Side	Egyptian Side
1. Equipment & Materials						
(1) Machinery	177,000		3,000			
(2) Piping Materials	5,000		2,000			
(3) Instrument'n Eq. & Mtl's	17,000		500			
(4) Electrical Eq. & Mtl's	33,000		3,000			
(5) Testing Eq., Etc.	3,000		500			
1. Subtotal	235,000	0	9,000	0	244,000	0
2. Field Construction						
(1) Steel Tanks & Vessels		1,210,000				
(2) Acid-Proof Lining		1,000,000				
(3) Equipment Installation		150,000				
(4) Piping		510,000		850,000		28,900
(5) Foundations		690,000				0
(6) RC-made Reservoir/Structure		1,920,000		100,000		3,400
(7) Road/Pavement		100,000				0
(8) Building		500,000				0
(9) Platform, Piperack		110,000		100,000		3,400
(10) Painting		70,000		30,000		1,000
(11) Electrical Works		100,000		40,000		1,400
(12) Instrumentation		150,000		10,000		300
(13) Commissioning/Test		50,000				0
2. Subtotal	0	6,560,000	0	1,130,000	223,000	38,400
Direct Cost: 1 + 2 (Eq. ¥1000)	458,040		47,420			
3. Indirect Cost						
(1) Export Packing, Ocean Tra	29,500		500		30,000	0
(2) Import Duty, Inland Transportation*1		1,945,000		70,000		68,500
(3) Temporary Facilities*2		394,000		—	13,400	
(4) Subcontractor Expenses*3		1,640,000		—	55,800	
(5) Insurance, Social Tax*4		387,000		38,000	13,200	1,300
(6) Supervisor Expenses	10,000				10,000	
3. Subtotal	39,500	4,366,000	500	108,000	122,300	69,800
All Total: 1 + 2 + 3	274,500	10,926,000	9,500	1,238,000	589,400	108,200
All Total (Eq. ¥1000)	274,500	371,500	9,500	42,100		
IBL/OBL Total (Eq. ¥1000)	646,000		51,600			
Total Cost	697,600				589,400	108,200

*1 : (日本調達資材費+輸出梱包·海上輸送費) x25%
IBL=264,500千円x25%=66,125千円=1,945,000LE
OBL=9,500千円x25%=2,375千円=69,900LE

*2 : 現地工事費x6%=6,560,000LEx0.06=393,600LE

*3 : 現地工事費x25%=6,560,000LEx0.25=1,640,000LE

*4 : 1+2 (Superviser Feeを除く) x2.7%
IBL=7,142千円(210,000LE)+177,000LE=387,000LE
OBL=257千円(7,600LE)+30,500LE=38,100LE

Costs are Demarcated to Egyptian Side.

Unit Cost for Estimation of W.W.T. Demonstration Plant (Reference)

Factory Name: Egyptian Iron and Steel Co.
Design Case: Basic Design (Original Case)

1. Major Equipment

Equipment Name	Unit Cost [x10³Yen]	Note
(1) Acid water pumps	2,000～4,000	Material: SCS
(2) Sludge Rake	8,000～12,000	3 sets
(3) Centrifuge	25,000	3 sets
(4) Lime feeder	16,800	1 set
(6) Motor Control Center	12,000	
(7) Center Control Panel	3,000	1 set

2. Field Work

Work Item	unit	unit Cost[LE]	Note
(1) Site Preparation	[m²]	8	
(2) Civil (Earth Work)	[m³]	34	
(3) RC Work	[m³]	1,500	Foundation, Water Basin
(3) Storage Tank	[ton]	3,430	Equalization Tank, Chemical tank Neutralization Tanks
(4) Structural Steel	[ton]	2,000	Pipe rack, Operating Stage
(5) Equipment Installation	[ton]	400	Pumps, Clarifier rakes, Dehydrator
(6) Piping	[ton]	3,970	Except valves
	[in-m]	30	Except valves
(7) Painting	[m²]	50	
(8) Local Building	[m²]	2,600	W.W.T Control Room
(9) Electrical	[cable-m]	3	

Running Cost-Egyptian Iron and Steel Co.

2000.1.20

* Unit cost is not fixed yet

Items	Treating Capacity (m^3/h)	Feeding Ratio (mg/L)	Consump. (kg/h)	Unit Cost (LE/kg)	Cost-1 (LE/h)	Cost-2 (LE/day)	Cost-3 LE/year)	Unit Cost (LE/m^3)	Remarks
1.1 Chemical Cost									
1) $Al_2(SO_4)_2 \cdot 18H_2O$	170	30	5.1	0.3	1.53	37	12,118	0.009	
2) CaO	170	3,700	629	0.15	94.35	2,264	747,252	0.555	
3) Polymer-A (Anionic or Cationic)	170	5	0.85	27	22.95	551	181,764	0.135	
4) Polymer-B (Anionic or Cationic)	1,500 kg/h	0.5%	7.5	27	202.50	4,860	1,603,800	1.191	
Sub-Total	—	—	—	—	321.33	7,712	2,544,934	1.890	
1.2 Filter Media	Loading	Loss	Loss/~~年~~Y						
* 1) Anthracite (3 Sets)	27 m^3	20 %/year	٥.٤ 0	1	0.00	0	٥٤٠٠ 0	~~0.000~~	٠.٠٠٥
* 2) Sand (3 Sets)	12 m^3	10 %/year	١.٢ 0	0.3	0.00	0	٧٦٠ 0	-0	
Sub-Total	—	—	—	—	0.00	0	٥,٧٦٠ 0	~~0.000~~	٠.٠٠٥
			kWh/d	LE/kWh					
1.3 Power Consumption			6,159	0.12	30.80	739.13	243,914	0.181	
			m^3/day	m^3					
1.4 Industrial Water or Potable Water			120	0.528	2.64	63.36	20,909	0.016	
1.5 Maintenance Fee	19,000,000				71.97	1727.27	570,000	0.423	
(Plant Cost * 3 %/year) 650,000,000/34=19,000,000 LE									
Item 1 Total								2.51	
			Person/d	LE/P/year					
2. Operator including sludge handling	4 Persons*3 Shift+1S		16	10,000	20.20	484.85	160,000	0.12	
	(1 person : operation								
	2 persons : sludge)								
Total Operation Cost	—	—	—	—	446.94	10,726.53	3,539,756	2.63	

Power Consumption

Tag No.	kW	Operation	Nominal	
PU-XX	100	24	2400.00	(Existing)
PU-101	0.75	24	18.00	
PU-01	15	24	360.00	
PU-02	1.5	24	36.00	
PU-03	2.2	24	52.80	
PU-04	1.5	24	36.00	
PU-05	0.4	24	9.60	
PU-06	0.75	24	18.00	
PU-07	5.5	24	132.00	
PU-08	2.2	24	52.80	
PU-09	15	24	360.00	
PU-10	55	1.5	82.50	
PU-11	5.5	24	132.00	
PU-12	22	24	528.00	
PU-13	2.2	24	52.80	
PU-14	0.75	24	18.00	
B-01	11	24	264.00	
B-02	15	24	360.00	
MZ-01	1.5	24	36.00	
MZ-02	2.2	24	52.80	
MZ-03	1.5	24	36.00	
MZ-04	0.75	24	18.00	
MZ-05	55	12	660.00	
MZ-05'	7.5	12	90.00	
MZ-06	55	24	1320.00	
MZ-06'	7.5	24	180.00	
MZ-07	2.2	12	26.40	
MZ-08	0.75	24	18.00	
MX-01	3.7	24	88.80	
MX-02	3.7	24	88.80	
MX-03	1.5	1	1.50	
MX-04	1.5	1	1.50	
MX-05	2.2	24	52.80	
MX-06	0.2	24	19.20	
MX-07	2.2	1	2.20	
A	—	—	7,604.50	kWh/d

Tag No.	kW	Operation	Nominal	
MX-08	3.7	24	88.80	
C-01	0.75	8	6.00	
B			94.80	
A+B			7,699.3	kWh/d
Consumption Rate			0.8	
Consumption			6159.44	kWh/d

COLD ROLL MILL FACTORY

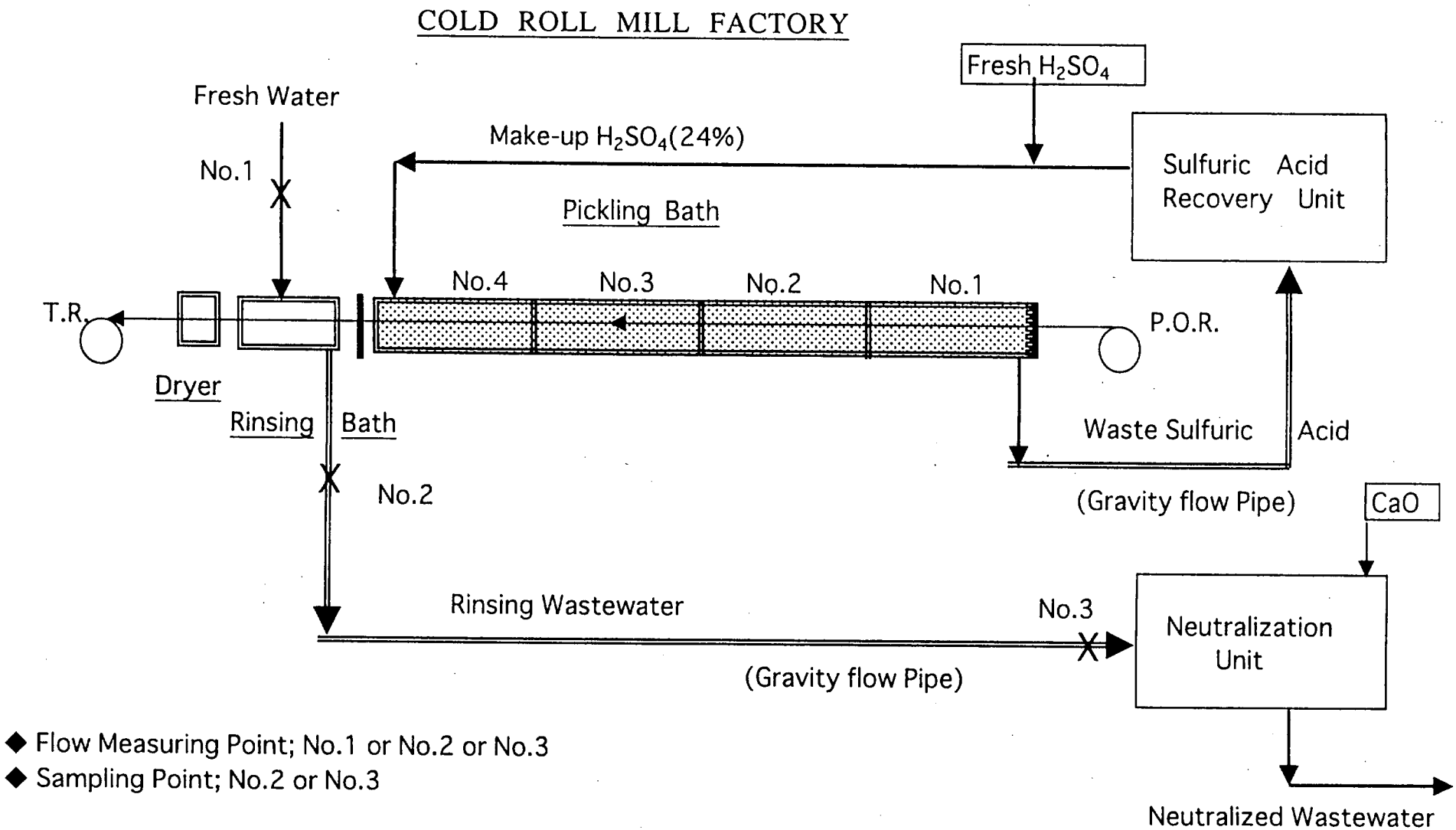

FLOW MEASUREMENT AND SAMPLING OF RINSING WASTEWATER

Client: JAPAN INTERNATIONAL COOPERATION AGENCY (JICA)

Project Name: THE STUDY ON INDUSTRIAL WASTE WATER POLLUTION CONTROL IN THE ARAB REPUBLIC OF EGYPT

Factory Name: EGYPTIAN IRON AND STEEL CO.

BASIC DESIGN
(ORIGINAL)

Document Title:

CALCULATION SHEET FOR W.W.T. DEMONSTRATION PLANT

Issued Date September 2000

Consultant: JICA STUDY TEAM

CHIYODA DAMES AND MOORE CO.

CHIYODA CORPORATION

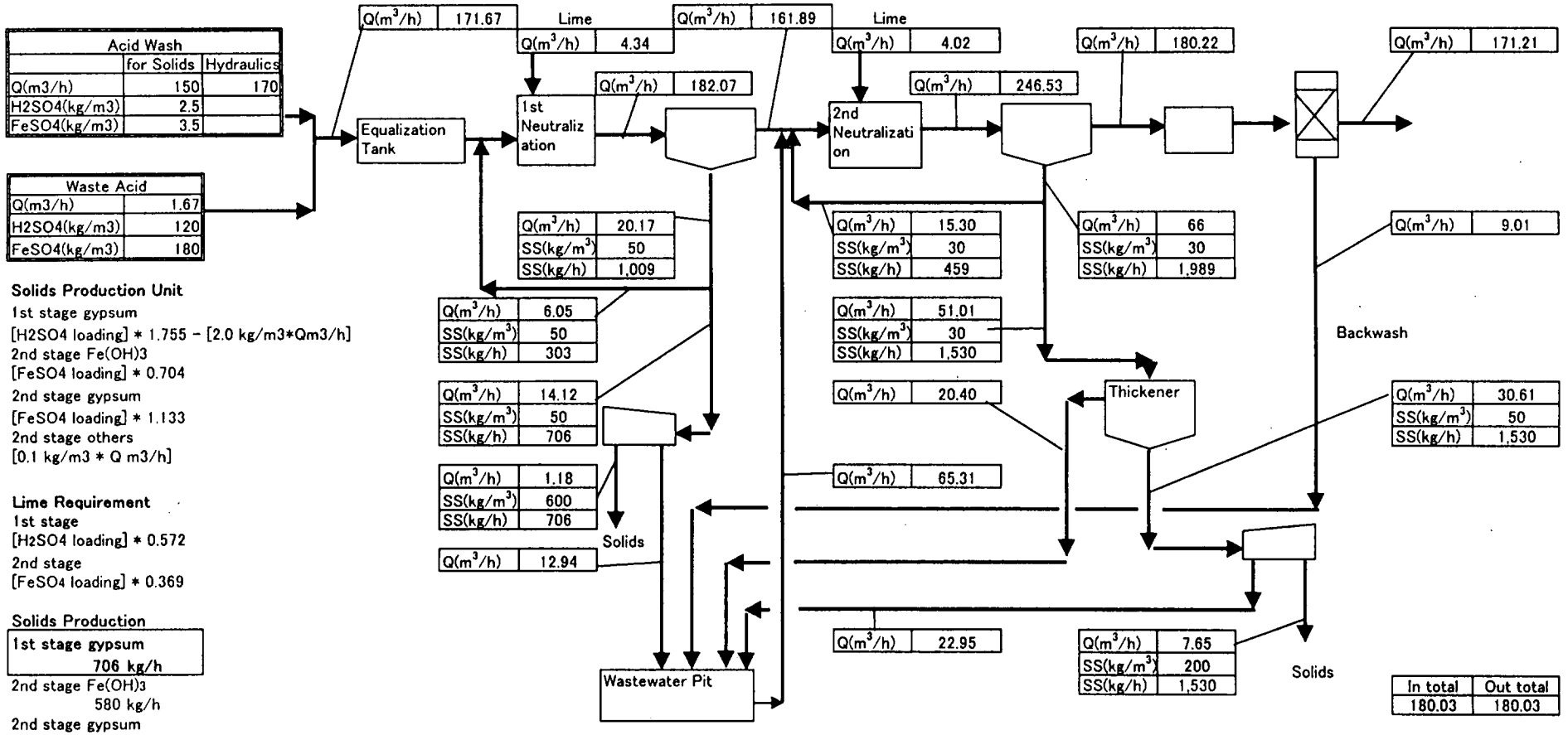

Solids Production Unit

1st stage gypsum
[H2SO4 loading] * 1.755 - [2.0 kg/m3*Qm3/h]
2nd stage Fe(OH)3
[FeSO4 loading] * 0.704
2nd stage gypsum
[FeSO4 loading] * 1.133
2nd stage others
[0.1 kg/m3 * Q m3/h]

Lime Requirement

1st stage
[H2SO4 loading] * 0.572
2nd stage
[FeSO4 loading] * 0.369

Solids Production

1st stage gypsum	706 kg/h
2nd stage Fe(OH)3	580 kg/h
2nd stage gypsum	935 kg/h
2nd stage others	15 kg/h
2nd stage total	1,530 kg/h

1st + 2nd total	2,236 kg/h
	53,666 kg/D

Lime Requirement as CaO

1st stage lime	329 kg/h
2nd stage lime	305 kg/h

Lime Solution:
10% as Ca(OH)2
= 7.57% as CaO

1st + 2nd total	633 kg/h
	15201 kg/D

Molecular weight	
H_2SO_4	98.1
$CaSO_4 \cdot 2H_2O$	172.2
$FeSO_4$	151.9
$Fe_2(SO_4)_3$	399.9
$Fe(OH)_3$	106.9
CaO	56.1
Ca(OH)2	74.1

CHEMICAL REACTION and WATER BALANCE

Dec. 15, 1999
H. Toyohara

1st stage Gypsum Poduction

$$H_2SO_4 + Ca(OH)_2 \rightarrow CaSO_4 \cdot 2H_2O \downarrow$$

2nd stage Iron Oxidation and Gypsum Production

$$FeSO_4 + 5H_2O + 1/2O_2 \rightarrow Fe(OH)_3 \downarrow + H_2SO_4$$
$$H_2SO_4 + Ca(OH)_2 \rightarrow CaSO_4 \cdot 2H_2O \downarrow$$

Sludge Production and Water Balance

For Solids calculation, 150 m3/h flow rate is applied.

1. Design Basis

Inlet wastewater

Q	m3/h	150	
	m3/D	3600	
H2SO4	%	0.25	estimated
FeSO4	%	0.35	

EISC said on Dec. 07	
H2SO4	1.2 %
FeSO4	2.3 %
EISC said on Nov. 18	
H2SO4	1.2 %
FeSO4	1.5 %
TIMS Analysis Nov. 17	
H2SO4	0.24 %
FeSO4	0.2 %

Waste Acid

Q	m3/d	40
H2SO4	%	12
FeSO4	%	18

EISC said on Nov. 18,Dec. 07	
H2SO4	10-12 %
FeSO4	16-18 %

MW	
H2SO4	98.1
CaSO4·2H2O	172.2
FeSO4	151.9
Fe2(SO4)3	399.9
Fe(OH)3	106.9
CaO	56.1
Ca(OH)2	74.1

TIMS Analysis Nov. 17	
H2SO4	17 %
FeSO4	16 %

WWT Inlet

Q	m3/h	151.67		
H2SO4	%	0.379	kg/m3	3.791209
FeSO4	%	0.544	kg/m3	5.43956

2. Sludge Production

1st Stage Gypsum Production

$H_2SO_4 + Ca(OH)_2 \rightarrow CaSO_4 \cdot 2H_2O \downarrow$

			(Wash)	(Acid)	
H2SO4 to be treated	kg/h	575	375	200	
	kg/D	13,800	9000	4800	
CaSO4·2H2O	kg/h	**1,009**			<- Total Production (Solids + Dissolved
	kg/D	24,225			
Concentration in WW	kg/m3	6.66			
Saturated concentration	kg/m3	2.00			<- To be discharged in wastewater
Gypsum to be sedimented	kg/m3	4.66			
	kg/h	**706**			<- To be dehydrated in Centrifuge
	kg/D	16,759			

2nd stage Sludge

FeSO4

$FeSO_4 + 5H_2O + 1/2O_2 \rightarrow Fe(OH)_3 \downarrow + H_2SO_4$

$Fe(OH)_3 + H_2SO_4 + Ca(OH)_2 \rightarrow Fe(OH)_3 \downarrow + CaSO_4 \cdot 2H_2O \downarrow + H_2O$

			(Wash)	(Acid)
FeSO4 to be oxidized	kg/h	825	525	300

		19,800	12600	7200	
Fe to be treated	kg/h	303			
	kg/D	7,279			
Fe(OH)3 to be generated	kg/h	580			
	kg/D	13,929			
2nd stage gypsum					
Gypsum from FeSO4					
SO4 in FeSO4	kg/h	522			
CaSO4·2H2O	kg/h	935			
Other Solids					
	kg/h	15.17			
	kg/D	364			
	kg/m3	0.1			
1st Lime Injection					
H2SO4 to be treated	kg/h	575			
Lime amount Ca(OH)2	kg/h	434.4			0.571787
Lime amount CaO	kg/h	328.8			0.571787
Lime Milk Conc.	%	10.0	7.568622		
Lime Milk Flow Rate	m3/h	4.3			
2nd Lime Injection					
SO4 to be treated in 2nd stage	kg/h	522			0.369165
Required lime Ca(OH)2	kg/h	402			0.369165
Lime Amount CaO	kg/h	305			
Lime Milk Conc.	%	10.0			
Lime Milk Flow Rate	m3/h	4.0			
Total lime consumption					
CaO	kg/h	633.3			
	kg/D	**15,200**			
Ca(OH)2	kg/h	836.8			
	kg/D	20,083			
Lime Milk Flow rate Total	m3/h	8.4			

	kg/h	kg/D		
1st stage Gypsum production	**706**	**16,945**		
2nd stage Gypsum production	935.05	22,441		61.1
2nd stage Fe(OH)3	580.39	13,929		37.9
2nd stage others	15.17	364	@as 100 ppm	1.0
2nd stage total	**1,531**	**36,735**		100.0
TOTAL solids	2,236.67	53,680		

1st Dehydrator			
Solids to be treated	kg/h	706	for Balance Calc.
Operation	h/D	12	
No. of Equipment in operation		1	
Concentration to be fed	%	5	
Capacity	m3/h	28.24	for Equipment Calc.
2nd Dehydrator			

Solids to be treated	kg/h	1,531
Operation	h/D	24
No. of Equipment in operation		1
Concentration to be fed	%	5
Capacity	m3/h	30.61

Water Balance (Case 3: 2 stage lime injection)

		Solids kg/m3	Solids kg/h	Flow m3/h	H2SO4 kg/m3	FeSO4 kg/m3	
1	Washwater			170	2.5	3.5	
2	Waste Acid			1.67	120	180	
3	Wastewater			171.67	3.79	5.44	
	Backflow from WWT			65.32			
3	WWT In			171.67			
	Recycle from 1st Clarifier			6.06			
	Neutralization in			177.72			
	Lime in 1			4.34			
4	1st Settling Tank In			182.07			
	1st Settling Tank Overflow			161.89			
	1st Settling Tank Bottom	50	1,009	20.18			
	To Recycle	50	303	6.06			30 % of gypsum generated from H2SO4 is recycled.
	To 1st Centrifuge	50	706	14.12			24 hours operation Basis. 3 times flow rate for mech. Design
9	1st Centrifuge Sludge	600	706	1.18			
	1st Centrifuge Supernatant		(3.9)	12.94			
	Lime in 2			4.02			
	Recycle from 2nd Clarifier			15.31			
5	2nd Clarifier In			246.54			
6	2nd Clarifier Overflow			180.22			
	2nd Clarifier Bottom	30	1,990	66.33			
	To recycle	30	459	15.31			30 % of generated gypsum is recycled.
	To Thickener	30	1,531	51.02			
	Thickener Bottom/To Centrifuge	50	1,531	30.61			
	Thickener supernatant			20.41			
8	2nd Centrifuge sludge	200	1,531	7.65			
	2nd Centrifuge supernatant		(6.9)	22.96			
	Sand Filter In			180.22			
7	Sand Filter Out			171.20			
	Sand Filter Backwash			9.01			

Concrete Basisn

		Z-01 Gypsum Pit	Z-02 Clarified Water Pi
Flow rate (Normal)	m3/h	14.12	161.89
HRT	h	4	0.5
Density	kg/m3	1055	1055
Capacity	m3	56.48498458	80.94468846
Diameter	m		
Length	m	5.0	5.0
Width	m	6.5	6.5
Height	m	2.2	3.1
Operating Level	m	1.7	2.5
Volume	m3	72	101
Fluid Volume	m3	56	81
Fluid Velocity	m/h	1.7	2.5
D／OL	—		
Number of Vessels	—	1	1
1m3当りの重量(RC)	kg/m3	2,200	2,200
1m3当りの重量(Rubber	kg/m3	(1,000)	(1,000)
厚さ(RC)	mm	200	200
厚さ(Coat)	mm	4	4
安全係数	—	1.05	1.05
空時(1槽当り)	ton	38.7	48.4
運転時(1槽当り)	ton	98.3	133.8
厚さ	mm	—	—
面積	m2	—	—
1槽当りの表面積			
・密閉式；屋根+側面+底			
・開放式；側面+底	m2	83	104

Z-3 Treated Water Pit	Z-4 Wastewater Pit	Z-5 Sludge Pit
180.22	65.32	30.61
0.5	2	2
1055	1055	1055
90.10779396	130.6450272	61.22437
6.5	12.0	5.0
6.5	6.5	6.5
2.6	2.2	2.4
2.1	1.7	1.9
110	172	78
90	131	61
2.1	1.7	1.9
1	1	1
2,200	2,200	2,200
(1,000)	(1,000)	(1,000)
200	200	200
4	4	4
1.05	1.05	1.05
51.2	74.3	40.9
146.3	212.1	105.5
—	—	—
—	—	—
110	159	88

＊＊＊＊ポンプ設計書＊＊＊＊

- 顧客名　JICA / Egyptian Iron and Steel Co.
- プロジェクト名　Industrial Pollution Contro
- Job No.
- 設計日　1999/11/5
- 設計者　H. Toyohara

*1)
酸性廃水-W.A.(Waste Acid)
石膏スラリー-G.S.(Gypsum Slurry)
処理廃水-T.W.W.(Treated Waste Water)
中性廃水-N.W.W.(Neutral Waste Water)
金属水酸化物+石膏スラリー-HY.+GYP.(HYDROXIDE+GYPSUM)
金属硫化物スラリー-S.S.(Sulfide Slurry)
消石灰スラリー-L.M.(Lime Milk)
硫酸鉄-Fe2(SO4)3
水硫化ソーダ-NaHS
硫酸-H2SO4
高分子凝集剤水溶液-Floc.+H2O(Flocculant+H2O)

	No.			1	2	3	4	5	6	7	8	9	10	11	12	13	14
1	Tag No.			PU-01 A/B	PU-02 A/B	PU-03 A/B	PU-04 A/B	PU-05 A/B	PU-06 A/B	PU-07 A/B	PU-08 A/B	PU-09 A/B	PU-10 A/B	PU-11 A/B	PU-12 A/B	PU-13 A/B	PU14 A/B
2	機器名			Wastewater Pump	No. 1 Sludge Pump	Gypsum Sludge Pump	Lime Pump	Coagulant Pump	Polymer A Pump	No. 2 Sludge Pump	No. 3 Sludge Pump	Filter Feed Pump	Backwash Pump	Wastewater return Pump	Treated Water Pump	Sludge Pump	Polymer B Pump
3	用途			RW Feed													
4	型式			Centrifugal	Centrifugal	Centrifugal	Centrifugal	Diaphragm	Diaphragm	Centrifugal	Centrifugal	Centrifugal	Centrifugal	Centrifugal	Centrifugal	MOHNO	Diaphragm
5	設計条件	流体 *1)	–	WA	TWW	TWW	TWW	NaHS	NaHS	NWW		GS	GS	GS	GS	NWW	Fe2(SO4)3
		Q:処理量	m3/h	171.7	20.18	28.2	16.7	0.46	0.46	66.3	30.6	180.2	550.0	65.3	171.2	30.6	0.08
		処理量	kg/h	171,666.7	21,186.5	29,654.6	17,656.4	462.9	462.9	69,642.7	32,142.8	180,215.6	550,000.0	65,322.5	171,204.8	30,612.2	152.8
		濃度	%					22	22		50						50
		スラリー濃度	wt %		5	5											
		密度	kg/m3	(1,000)	(1,050)	(1,050)	(1,055)	(1,000)	(1,000)	(1,050)	(1,050)	(1,000)	(1,000)	(1,000)	(1,000)	(1,000)	(2,000)
		粘度	cP	(1.0)	(1.5)	(1.5)	(4.0)	–	–	(1.0)	–	(1.0)	(1.0)	(1.0)	(1.0)	(1.0)	–
		pH	–	(1)	(7)	(2)	(2)	–	–	–	–	(2)	(2)	(2)	(2)	–	–
		運転温度	℃	A.T.	A.T.	A.T.	A.T.	A.T.	A.T.	A.T.	A.T.	A.T.	A.T.	A.T.	A.T.	A.T.	A.T.
		吸入圧力	m	0.0	0.0	0.0	0.0	0.0	0.0	0.0	0.0	0.0	0.0	0.0	0.0	0.0	0.0
		吐出圧力	m	15.0	15.0	15.0	15.0	15.0	15.0	15.0	15.0	15.0	15.0	15.0	50.0	15.0	15.0
		材質	–	SUS304	SUS304	SUS304	SUS304	SUS304	SUS304	CS	CS	CS	CS	CS	CS	CS	SUS304
6	機器設計	所要水動力	KW	4.66	0.58	0.81	0.48	0.013	0.013	1.89	0.873	4.90	14.94	1.77	4.65	0.83	0.004
		ポンプ効率	%	50	50	50	50	50	50	50	50	50	30	50	30	50	50
		所要軸動力	KW	9.3	1.2	1.6	1.0	0.03	0.03	3.8	1.75	9.8	49.8	3.5	15.5	1.7	0.01
		吸込配管圧力損失	m														
		吐出配管圧力損失	m														
		合計配管圧力損失	m														
		吸込実揚程	m														
		吐出実揚程	m														
		H:必要な実揚程	m	10	10	10	10	10	10	10	10	10	10	10	10	10	10
		NPSH	m														
7	機器仕様	台数	–	2	2	2	2	2	2	2	2	2	2	2	2	2	2
	(メーカー仕様)	型式	–	Centrifugal	Centrifugal	Centrifugal	Centrifugal	Diaphragm	Diaphragm	Centrifugal	Centrifugal	Centrifugal	Centrifugal	Centrifugal	Centrifugal	MOHNO	Diaphragm
		流量(Q×1.2)	m3/h	206	24	34	20	0.6	0.6	80	36.7	216	660	78	205	37	0.1
		ヘッド(H×1.5)	m	15	15	15	15	15	15	15	15	15	15	15	15	15	15
		流体	–	WA	TWW	TWW	TWW	NaHS	NaHS	NWW	0.0	GS	GS	GS	GS	NWW	Fe2(SO4)3
		使用温度	℃	A.T.	A.T.	A.T.	A.T.	A.T.	A.T.	A.T.	A.T.	A.T.	A.T.	A.T.	A.T.	A.T.	A.T.
		スラリー濃度	wt %	0	5	5	0	0	0	0	0	0	0	0	0	0	0
		密度	kg/m3	(1,000)	(1,050)	(1,050)	(1,055)	(1,000)	(1,000)	(1,050)	(1,050)	(1,000)	(1,000)	(1,000)	(1,000)	(1,000)	(2,000)
		粘度	cP	(1.0)	(1.5)	(1.5)	(4.0)	–	–	(1.0)	–	(1.0)	(1.0)	(1.0)	(1.0)	(1.0)	–
		pH	–	1	7	2	2	–	–	–	–	2	2	2	2	–	–
		材質	–	–	–	–	–	–	–	–	–	–	–	–	–	–	–
		重量	kg	–	–	–	–	–	–	–	–	–	–	–	–	–	–
		* 必要な軸動力	KW	(16.8)	(2.1)	(2.9)	(1.7)	(0.05)	(0.05)	(6.8)	(3.14)	(17.6)	(89.7)	(6.4)	(27.9)	(3.0)	(0.01)
		* 必要なモーター動力	KW	(22.0)	(3.0)	(3.7)	(2.2)	(0.1)	(0.1)	(11.0)	(5.5)	(22.0)	(110.0)	(11.0)	(33.0)	(5.5)	(0.1)
		軸動力(メーカー仕様)	KW	–	–	–	–	–	–	–	–	–	–	–	–	–	–
		モーター(メーカー仕様)	KW	–	–	–	–	–	–	–	–	–	–	–	–	–	–
			Pole	4	4	4	4	4	4	4	4	4	4	4	4	4	4
			Volt	415	415	415	415	415	415	415	415	415	415	415	415	415	415
			Hz	50	50	50	50	50	50	50	50	50	50	50	50	50	50

＊＊＊＊ポンプ設計書＊＊＊＊

- 顧客名 JICA / Egyptian Iron and St
- プロジェクト名 Industrial Pollution Contrc
- Job No.
- 設計日 1999/11/5
- 設計者 H. Toyohara

	No.			16	17	18	19	20	21	22	合計		Motor Selection Lad	Motor
1	Tag No.			PU-202A/B	PU-301A/B	PU-302A/B	PU-303A/B	PU-304A/B	PU-305A/B	PU-403A/B/C				
2	機器名			Lime Milk Feed Pump	Fe2(SO4)3 Dosing Pump	#1 NaHS Dosing Pump	#2 NaHS Dosing Pump	#1 H2SO4 Dosing Pump	#2 H2SO4 Dosing Pump	#3 Flocculant Dosing Pump			0.00	0.1
3	用途			消石灰ｽﾗﾘｰ供給	硫酸鉄供給	水硫化ｿｰﾀﾞ供給	水硫化ｿｰﾀﾞ溶液供給	硫酸供給	希硫酸供給	高分子凝集剤溶液供給			0.08	0.2
4	型式			MOHNO	Diaphragm	Diaphragm	Diaphragm	Diaphragm	Diaphragm	Diaphragm			0.16	0.4
													0.32	0.75
5	設計条件	流体 *1)	–	L.M.	Fe2(SO4)3	NaHS	NaHS+H2O	H2SO4	H2SO4+H2O	FLOC.+H2O			0.06	1.1
		Q:処理量	m3/h	48.6	0.08	0.46	4.63	0.0005	0.0443	0.4316			0.88	1.5
		処理量	kg/h	51,273.0	152.8	462.9	4,628.6	0.89	44.30	431.60			1.20	2.2
		濃度	%		50	22	10	98	2				1.76	3.0
		ｽﾗﾘｰ濃度	wt %	10						0.1			2.40	3.7
		密度	kg/m3	(1,055)	(2,000)	(1,000)	(1,000)	(1,840)	(1,000)	(1,000)			2.96	5.5
		粘度	cP	(4.0)	–	–	–	(18)	–	(1)			4.40	7.5
		pH	–	–	–	–	–	–	–	–			6.00	11.0
		運転温度	℃	A.T.	A.T.	A.T.	A.T.	A.T.	A.T.	A.T.			8.80	15.0
		吸入圧力	m	0.0	0.0	0.0	0.0	0.0	0.0	0.0			12.00	19.0
		吐出圧力	m	30.0	10.0	10.0	10.0	10.0	10.0	10.0			15.20	23.0
		材質	–	CS+Rubber	SUS304	SUS304	SUS304	SUS304	SUS304	SUS304			19.13	26.0
													22.61	30.0
													26.09	33.0
6	機器設計	所要水動力	KW	4.18	0.004	0.013	0.126	2.4E-05	1.2E-03	1.2E-02	49.8		28.70	37.0
		ﾎﾟﾝﾌﾟ効率	%	50	50	50	50	50	50	50			32.17	45.0
		所要軸動力	KW	8.4	0.01	0.03	0.25	0.0000	0.0024	0.0235	125.8		39.13	55.0
													47.83	60.0
		吸込配管圧力損失	m										54.55	75.0
		吐出配管圧力損失	m										68.18	95.0
		合計配管圧力損失	m										86.36	110.0
		吸込実揚程	m										100.00	150.0
		吐出実揚程	m										136.36	190.0
		H:必要な実揚程	m	30	10	10	10	10	10	10			172.73	220.0
		NPSH	m											
													200.00	260.0
7	機器仕様	台数	–	2	2	2	2	2	2	3	51		236.36	300.0
	(ﾒｰｶｰ仕様)	型式	–	MOHNO	Diaphragm	Diaphragm	Diaphragm	Diaphragm	Diaphragm	Diaphragm			272.73	370.0
		流量(Q×1.2)	m3/h	58	0.1	0.6	5.6	0.001	0.053	0.518			336.36	400.0
		ﾍｯﾄﾞ(H×1.5)	m	45	15	15	15	15	15	15			363.64	500.0
		流体	–	L.M.	Fe2(SO4)3	NaHS	NaHS+H2O	H2SO4	H2SO4+H2O	FLOC.+H2O			454.55	630.0
		使用温度	℃	A.T.	A.T.	A.T.	A.T.	A.T.	A.T.	A.T.			572.73	800.0
		ｽﾗﾘｰ濃度	wt %	10	0	0	0	0	0	0.1				
		密度	kg/m3	(1,055)	(2,000)	(1,000)	(1,000)	(1,840)	(1,000)	(1,000)				
		粘度	cP	(4.0)	–	–	–	(18.0)	–	(1.0)				
		pH	–	–	–	–	–	–	–	–				
		材質	–	–	–	–	–	–	–	–				
		重量	kg	–	–	–	–	–	–	–				
		* 必要な軸動力	KW	(15.0)	(0.01)	(0.05)	(0.45)	(0.0001)	(0.0043)	(0.0422)	(232.9)			
		* 必要なﾓｰﾀｰ動力	KW	(19.0)	(0.1)	(0.1)	(1.1)	(0.1)	(0.1)	(0.1)	(304.4)			
		軸動力(ﾒｰｶｰ仕様)	KW	–	–	–	–	–	–	–				
		ﾓｰﾀｰ(ﾒｰｶｰ仕様)	KW	–	–	–	–	–	–	–				
			Pole	4	4	4	4	4	4	4				
			Volt	415	415	415	415	415	415	415				
			Hz	50	50	50	50	50	50	50				

BDO－65

＊＊＊＊ポンプ設計書＊＊＊＊

●	顧客名	JICA / Egyptian Iron and St													
●	ﾌﾟﾛｼﾞｪｸﾄ名	Industrial Pollution Contro													
●	Job No.														
●	設計日	1999/11/5													
●	設計者	H. Toyohara													
	No.											12	13	14	15
1	Tag No.											PU-01A/B	PU-02	PU-114A/B	PU-201A/B
2	機器名											Wastewater Pump	No.1 Sludge Pump	Process Water Feed Pump	Lime Milk Transfer Pump
3	用途											RW Feed	Gypsum Withdraw	廃水供給	消石灰ｽﾗﾘｰ供給
4	型式											Centrifugal	Centrifugal	Centrifugal	Centrifugal
5	設計条件	流体 ＊1)	—									T.W.W.	S.S.	T.W.W.	L.M.
		Q:処理量	m3/h									39.5	1.9	80.6	48.6
		処理量	kg/h									39,500.0	2,194.5	80,600.0	51,273.0
		濃度	%												
		ｽﾗﾘｰ濃度	wt %										20		10
		密度	kg/m3									(1,000)	(1,155)	(1,000)	(1,055)
		粘度	cP									(1.0)	(1.5)	(1.0)	(4.0)
		pH	—									(10)	(7)	(7)	—
		運転温度	℃									A.T.	A.T.	A.T.	A.T.
		吸入圧力	m									0.0	0.0	0.0	0.0
		吐出圧力	m									10.0	10.0	30.0	10.0
		材質	—									CS+Rubber	CS	CS	CS+Rubber
6	機器設計	所要水動力	KW									1.07	0.06	6.57	1.39
		ﾎﾟﾝﾌﾟ効率	%	50	50	50	50	50	50	50	50	50	50	50	50
		所要軸動力	KW									2.1	0.1	13.1	2.8
		吸込配管圧力損失	m												
		吐出配管圧力損失	m												
		合計配管圧力損失	m												
		吸込実揚程	m												
		吐出実揚程	m												
		H:必要な実揚程	m									10	10	30	10
		NPSH	m												
7	機器仕様	台数	—									2	2	2	2
	(ﾒｰｶｰ仕様)	型式	—									Centrifugal	Centrifugal	Centrifugal	Centrifugal
		流量(Q×1.2)	m3/h									47	2.3	97	58
		ﾍｯﾄﾞ(H×1.5)	m									15	15	45	15
		流体	—									T.W.W.	S.S.	T.W.W.	L.M.
		使用温度	℃									A.T.	A.T.	A.T.	A.T.
		ｽﾗﾘｰ濃度	wt %									0	20	0	10
		密度	kg/m3									(1,000)	(1,155)	(1,000)	(1,055)
		粘度	cP									(1.0)	(1.5)	(1.0)	(4.0)
		pH	—									10	7	7	—
		材質	—									—	—	—	—
		重量	kg									—	—	—	—
		＊必要な軸動力	KW									(3.9)	(0.2)	(23.6)	(5.0)
		＊必要なﾓｰﾀｰ動力	KW									(5.5)	(0.4)	(30.0)	(7.5)
		軸動力(ﾒｰｶｰ仕様)	KW									—	—	—	—
		ﾓｰﾀｰ(ﾒｰｶｰ仕様)	KW									—	—	—	—
			Pole									4	4	4	4
			Volt									415	415	415	415
			Hz									50	50	50	50

千代田化工建設株式会社 社外秘

Polymer B Injection

(3-5) Polymer Injection Unit for Centrifuge

Dry Sludge Amount: 1,531 kg/h

1) Dosage		0.5	% as Dry SS=	7.65	kg/h	
2) Concentration		2	wt %=	20	g/L	
3) Specific gravity		1				
4) Injection rate	Q_{p0}=	382.6523	L/h=	6.38	L/min	
5) Req'd Vol.	V_{p0}=	9.18	m^3 (for 3days)			
6) Drum Dimension:	Hpo=	3.00	m (take)			Apo= 3.06 m^2
	Dpo=	1.97	m			
	:	Take: $2.5m^{ID}x3.5m^{H}$				

Polymer A Injection

(3-2) Polymer Injection Unit for 2ndary sedimentation

Flow Rate: 246.54 m3/h

1) Dosage		200	mg/L			
2) Concentration		0.1	wt %=	1	g/L	(D-09)
3) Specific gravity		1				
4) Req'd Polymer		246.54	g/h=	246.54	L/h	(PU-13)
5) Req'd Vol.	V_{p0}=	5.92	m^3 (1day)			
6) Demension	Hpo=	2.00	m (take)			Apo= 2.96 m^2
	Dpo=	1.94	m			
	:	Take: $2.0m^{ID}x2.5m^{H}$				

Coagulant

(3-6) Coagulant $Al_2(SO_4)_3 \cdot 18H_2O$ Injection Unit

1) Dosing Rate:		30	mg/L, Max.	50	mg/L	
2) Concentration:		20	wt % =	222.4	g/L	
3) Specific Gravity:		1.112				
4) Injection Rate:	Q_{p0}=	33.3	L/h=	0.55	L/min	(PU-10)
5) Drum Vol. :	V_{P0}=	5.6	m^3 (for 7days)			
Height:	H_{p0}=	2.0	m (take)			A_{P0}= 2.79 m^2
Diameter	D_{P0}=	1.9	m			
		Take: $2.0m^{ID}\times2.5m^{H}$				