2.7.5 Steel Conduit

(1) Design Data

Number of Lanes	:	1 set
Dimension		
Transition pipe	:	1.400 m x 1.400 m ~ Ø 1.400 m
Outlet pipe	:	Ø 1.400 m, Ø 0.650 m, Ø 0.250 m
Length		
Transition pipe	:	1.150 m
Outlet pipe	:	Ø 1.400 m × 399.511 m(VIP1 ~ Branch)
	:	Ø 0.650 m × 16.210 m (Branch ~ Guard Valve)
	:	Ø 0.250 m × 9.056 m (Branch (Ø 0.650) ~ Guard Valve)
Design pressure	:	See table at next page
Design Stress	:	0.54 σy as basis 1.35 × 0.54 σy shall be adopted when the pipe shell bending stress due to restraining the shell deformation by the ring girder or stiffener ring has been considered.
Safety factor for Buckling	:	1.5
Corrosion allowance	:	1.5 mm for pipe shell
Used steel quality for pipe shell	:	SS400, SM400

DESIGN PRESSURE OF STEEL PENSTOCK

		Under Construction Work		After Completion of Work					
		Case 1		Case 2		Case 3		Case 4	
		I.P	E.P	I.P	E.P	I.P	E.P	I.P	E.P
Tension Pipe		-	2.0 kgf/cm^2 Grouting Pressure	H.W.L 155.300 + hw	-	-	-	-	N.W.L 148.900 + hw
Outlet Pipe	ϕ 1400 (~ DAMAXIS)					S.W.L 151.800 + Po			
	ϕ 1400 (DAMAXIS ~)								-
	ϕ 650								
	ϕ 250								

Notes : I.P = Internal Pressure, E.P = External Pressure
hw = 0.8 m (Wave height due to wind)
Po = Water Hanmer Pressure (See next page)

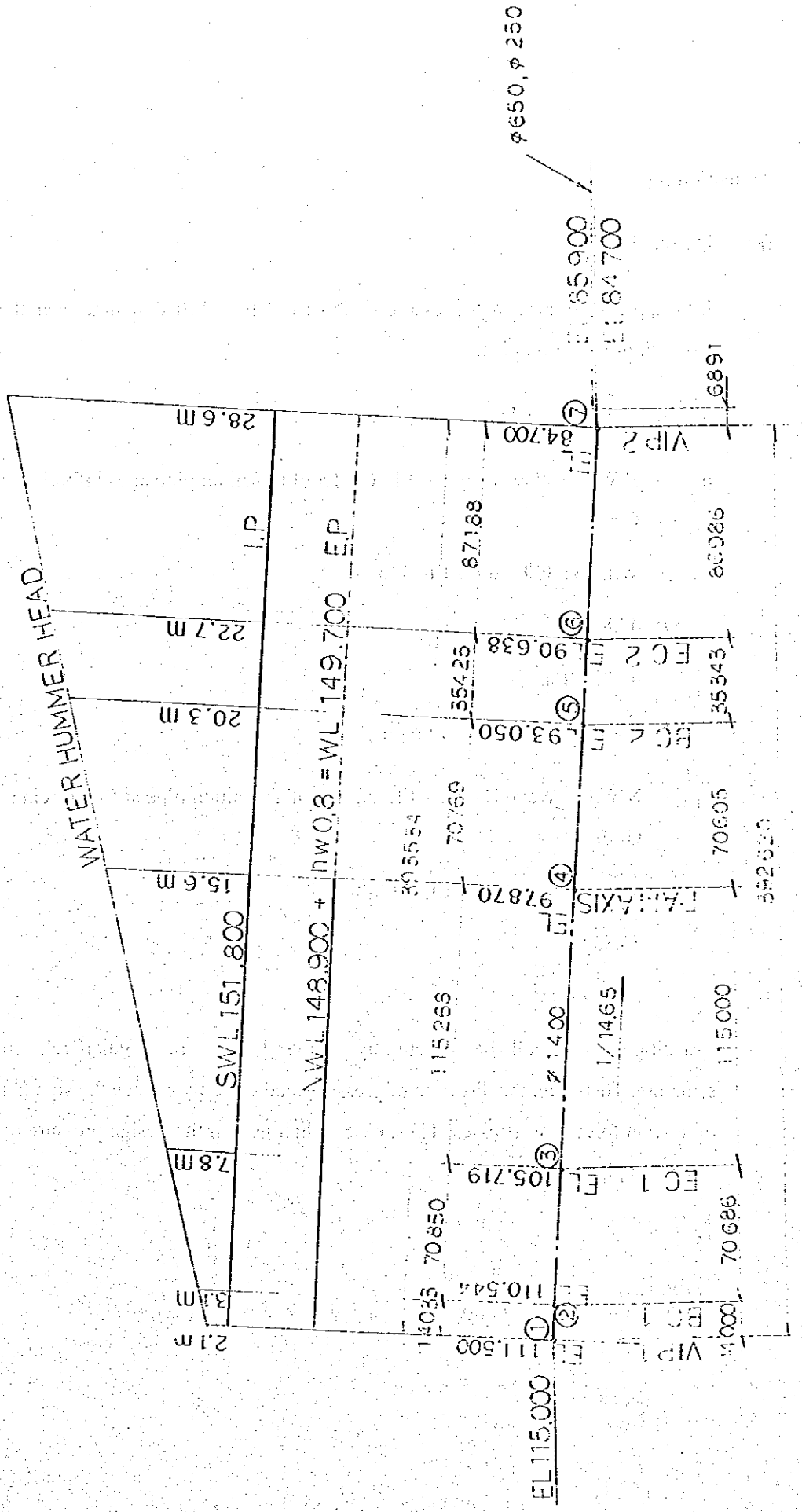

Water Hammer

Here; IP : Internal Pressure, EP : External Pressure

(2) Transition pipe

(a) Design Pressure

It is apparent from design pressure table case 2 to 4 will dominate over the strength of transition pipe.

In case 2, internal pressure p_2 is

p_2 = H.W.L + Wave Height – EL. Center of transition pipe at Reinforcing Girder

= W.L 155.300 + 0.8 – EL. 113.268

= 42.832 m

= 42.832 tf/m^2

In case 4, external pressure p_4 is

p_4 = N.W.L + Wave Height – EL. bottom of Transition pipe at Reinforcing Girder

= W.L 148.900 + 0.8 – EL. 112.861

= 36.839 m

= 36.839 tf/m^2

Transition pipe shall be structurally analysed as a rectangular rahmen structure. Therefore, the direction of pressure load can only change the sign (±) of section forces and stresses. Thus, case 2 shall govern the design pressure of transition pipe.

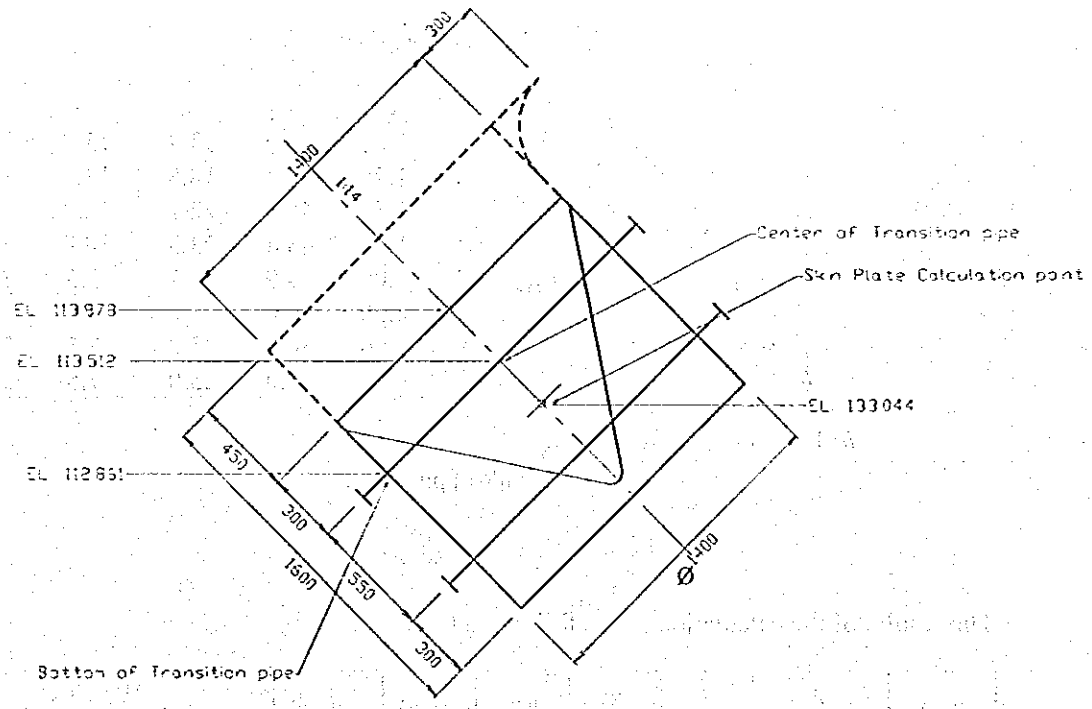

(b) Strength of Transition Pipe

(i) Pipe shell plate

Pipe shell plate shall be calculated as skin plate Flat plates which are subject to bending stress, shall be computed in accordance with DIN 19704, clause 6.5.2.2

$$\sigma = \frac{K}{100} \cdot \frac{P \cdot a^2}{t^2}$$

Where, σ : Bending stress in kgf/cm^2

p : Water pressure relative to the plate center

= (WL. 155.3 + hw 0.8 m – EL. 113.044) x 0.1 kgf/cm^3

= 4.3056 kgf/cm^2

K : Non – dimensional factor as shown in table

a,b : Support length of plate panel $a \leqq b$ in cm

a = 55 cm

b = 140 cm

t : Efficient thickness of skin plate = 2.65 cm

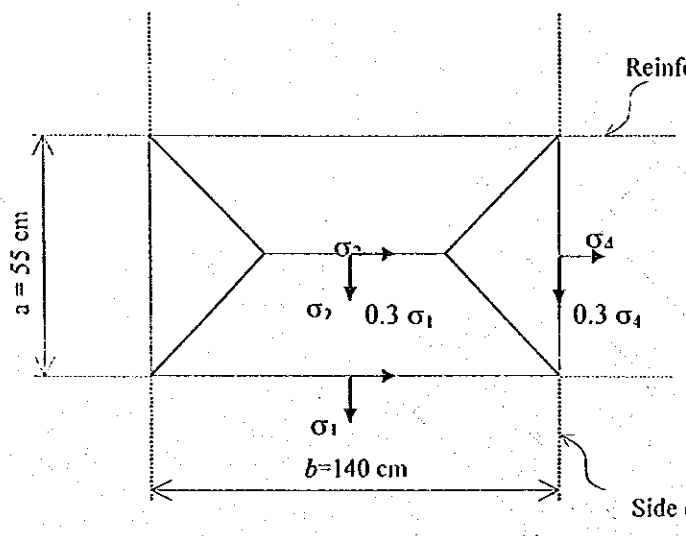

b/a	σ_1	σ_2	σ_3	σ_4
1.00	30.9	13.7	13.7	30.9
1.25	40.3	18.8	13.5	33.9
1.50	45.5	22.1	12.2	34.3
1.75	48.4	23.9	10.8	34.3
2.00	49.9	24.7	9.5	34.3
2.50	50.0	25.0	8.0	34.3
3.00	50.0	25.0	7.5	34.3
∞	50.0	25.0	7.5	34.3

" K "

The results of the calculation are as following table

Item	p (kgf/cm²)	a (cm)	b (cm)	b/a	t (cm)	K	σ (kgf/cm²)	σ_a (kgf/cm²)
σ_1	4.3056	55	140	2.5	2.65	48.3	896	1300
σ_2						23.0	426	
σ_3						7.0	130	
σ_4						34.3	636	
$0.3\ \sigma_1$						48.3	269	
$0.3\ \sigma_4$						23.0	191	

Shearing stress

$$\tau = \frac{p \cdot a}{2 \cdot t}$$

$$\tau = \frac{4.3056 \times 55}{2 \times 2.65} = 45\ \text{kgf/cm}^2 \leqq \tau_a = \frac{\sigma a}{\sqrt{3}} = 750\ \text{kgf/cm}^2$$

(ii) Reinforcing Girder

As shown in figure next page, the section force distributions are approximately shown in figure next page.

Bending moment Mx, Axile force Nx, shearing force Sx

a ~ b :

Mx = Ma + ½ px² (Tensile stress at side of pipe shell plate "+")

$$Nx = p(r + \ell_2)$$

$$Sx = p \cdot x$$

Where,

Ma : Bending moment of Point "a"

$$Ma = -\frac{P}{B}\left\{\frac{\ell_1^3 + \ell_2^3}{6} + rm^2 \cdot (\ell_1 + \ell_2) + \frac{\pi \cdot rm}{2} \cdot \left(\frac{\ell_1^2}{2} - \ell_2 \cdot rm\right) + \frac{\ell_2}{2} \cdot (\ell_1 - \ell_2) \cdot (2rm + \ell_1 + \ell_2)\right\}$$

$$B = \ell_1 + \ell_2 + \frac{\pi \cdot rm}{2}$$

b ~ c :

$$Mx : Ma + p \cdot \left(\frac{\ell_1^2}{2} - rm\ell_2\right) + p \cdot rm \cdot \sqrt{\ell_1^2 + \ell_2^2} \cdot \cos\left(\frac{X}{rm} - \beta\right)$$

$$Nx : p \cdot \left\{r + \sqrt{\ell_1^2 + \ell_2^2} \cdot \cos\left(\frac{x}{rm} - \beta\right)\right\}$$

$$Sx : -p \cdot \sqrt{\ell_1^2 + \ell_2^2} \cdot \sin\left(\frac{x}{rm} - \beta\right)$$

Where,

$\beta = t_m^{-1}\left(\ell_1 / \ell_2\right)$, As $x/rm = \beta$, Then $Mx = M_{max}$, $Nx = N_{max}$

$Sx = 0$

c ~ d :

$$Mx : Ma + p \cdot \left\{\frac{\ell_1^2}{2} - rm\left(\ell_1^2 + \ell_2^2\right)\right\} + p \cdot \left(\frac{x^2}{2} - \ell_2 x\right)$$

$$Nx : p \cdot (r + \ell_1)$$

$$Sx : p \cdot (r + \ell_2)$$

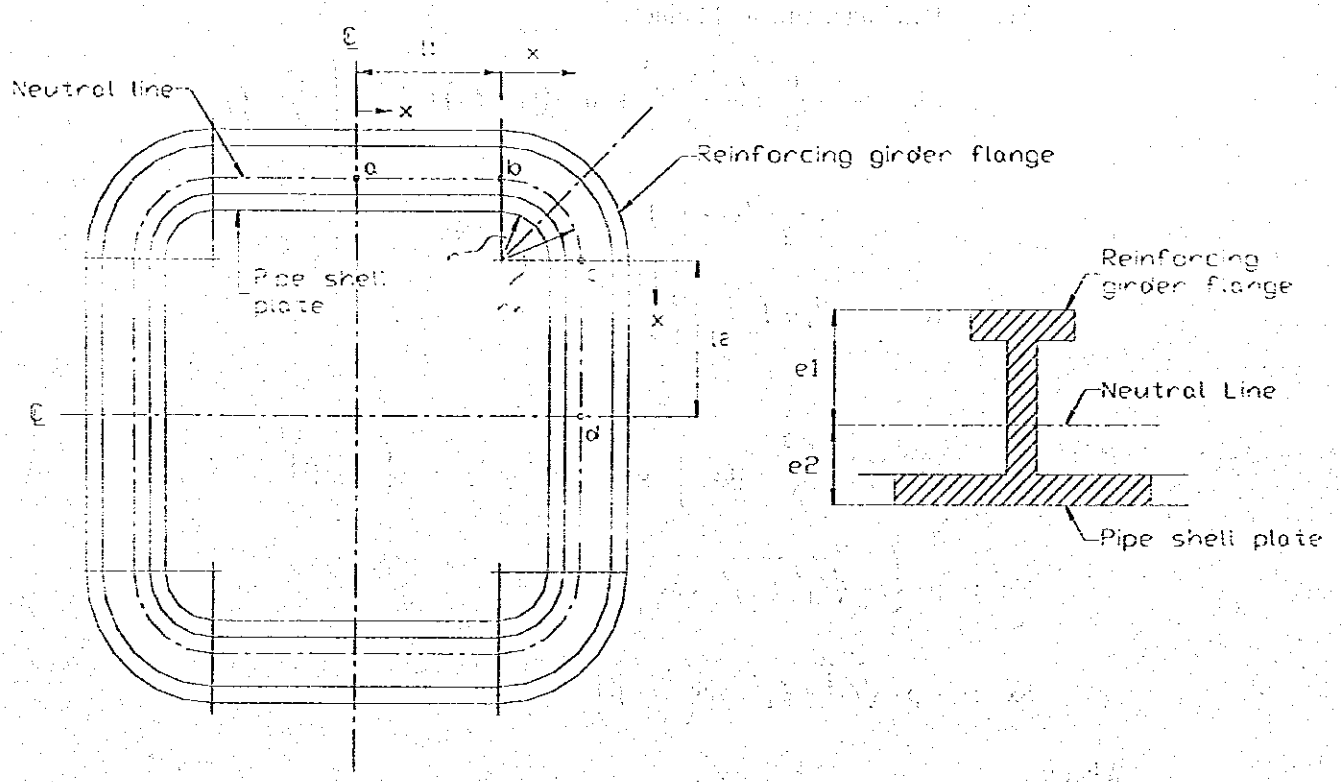

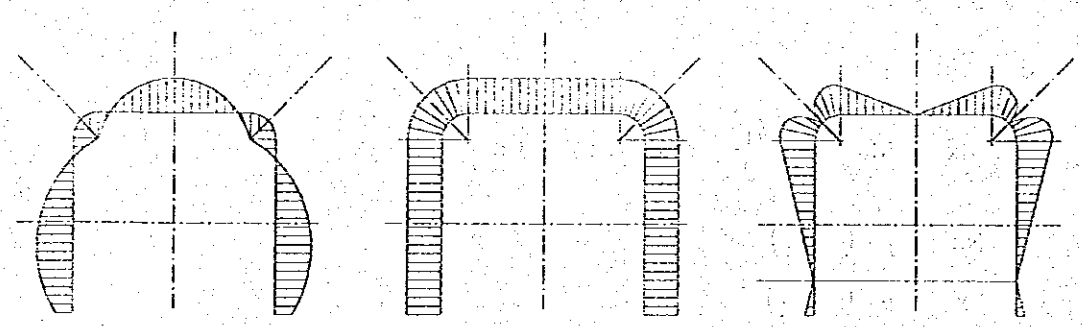

B.M.D A.F.D S.F.D

Reinforcing Girder Properties

The inner side flanges of the reinforcing girders also serve as the shell skin plate. The effective widths of the inner flanges are calculated by the formula and figure below.

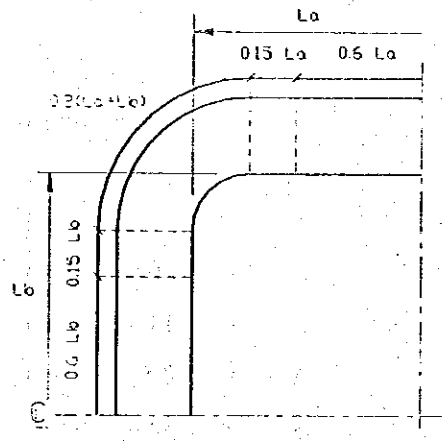

ℓ : Pitch of reinforcing girder = 0.55 m

L : Span

Center of top skin plate = 0.6 La

Center of side skin plate = 0.6 Lb

Corner of transition pipe = 0.2 (La + Lb)

La : Width of transition pipe = 1.4 m

Lb : Height of transition pipe = 1.4 m

The effective width of the inner flanges "2λ" are, Center of top skin plate

ℓ/0.6 La = 0.55 / (0.6 x 1.4) = 0.655

0.3 ≦ ℓ/0.6 La

λ = 0.15 x 0.6 La

= 0.15 x 0.6 x 1.4

= 0.126 m

Center of skin plate

ℓ/0.6 Lb = 0.55 / (0.6 x 1.4) = 0.655

0.3 ≦ ℓ/0.6 Lb

λ = 0.15 x 0.6 Lb

= 0.15 x 0.6 x 1.4

= 0.126 m

Corner of transition pipe

ℓ/0.2 (La + Lb) = 0.55/{0.2 x (1.4 + 1.4)} = 0.982

0.3 ≦ ℓ/0.2 (La + Lb)

λ = 0.15 x 0. (La + Lb)

= 0.15 x 0.2 x (1.4 + 1.4)

= 0.084 m

a ~ b, c ~ d

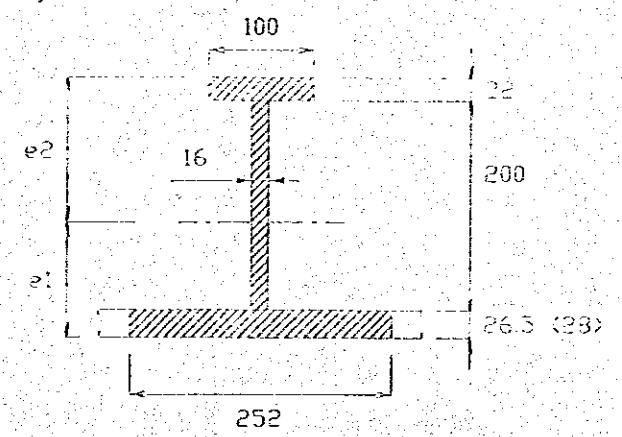

I	=	10219	(cm^4)
Z_1	=	1215	(cm^3)
Z_2	=	622	(cm^3)
e_1	=	8.4	(cm^2)
e_2	=	16.4	(cm^2)
A	=	120.78	(cm^2)
A_w	=	32.0	(cm^2)

b ~ c

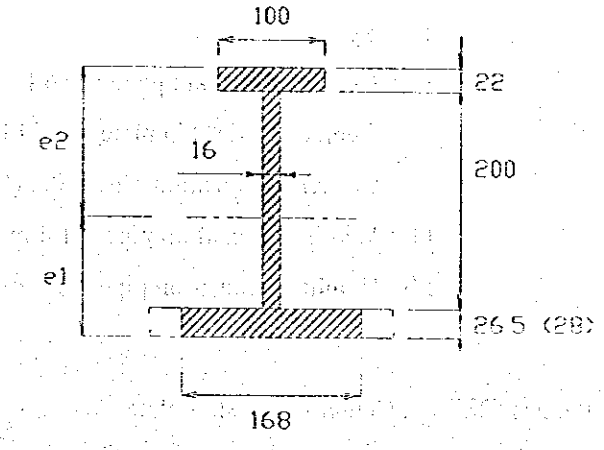

I	=	8836	(cm^4)
Z_1	=	883	(cm^3)
Z_2	=	596	(cm^3)
e_1	=	10.0	(cm^2)
e_2	=	14.8	(cm^2)
A	=	98.52	(cm^2)
A_w	=	32.0	(cm^2)

The results of calculation are as following table.

Bending moment, Axial force and Shearing force.

Calculate Point	Bending moment M (kgf·m)	Axial Force N (kgf)	Shearing force S (kgf)
a	-186 948	16490	0
b	107 522	16490	11779
b ~ c center	248 888	16490	0
c	107 522	16490	-11779
d	-186 948	16490	0

Note:

$P = p \cdot b$
$= 4.2832 \times 55$
$= 235.576$ (kgf/cm)

Where,
p : water pressure
b : pitch of Reinforcing girder

$\ell_1 = 50$ cm
$\ell_2 = 50$ cm
$r = 20$ cm
$r_n = r + e_1$

Stress of Reinforcing Girder

Bending Stress

Outer $\sigma_{0b} = \dfrac{M}{Z_1}$

Inner $\sigma_{ib} = \dfrac{M}{Z_2}$

Axial Stress

$$\sigma = \frac{N}{A}$$

Shearing stress

$$\tau = \frac{S}{A_W}$$

The result of Bending, Axial and shearing stresses are as following table.

Calculate Point	Bending Stress (kgf/cm²)		Axial Stress σ (kgf)	Shearing stress τ (kgf)
	σ_{ob}	σ_{ib}		
a	301	-154	137	0
b	-180	122	167	368
b ~ c center	-418	282	167	0
c	-180	122	167	-368
d	301	-154	137	0

Allowable stress

σ_a = 1300 kgf/cm²
τ_a = 750 kgf/cm²

(iii) Combined Stress

Extreme fiber stress

Outer $\sigma_{0\ell} = \sigma_{0b} + \sigma$

Inner $\sigma_{i\ell} = \sigma_{ib} + \sigma + \sigma_s$

Where, σ_s : Bending stress of skin plate

The result of Combined Stress

Calculation Point	Outer (kgf/cm²)	Inner (kgf/cm²)
a	437	– 286
b	– 13	925
b ~ c (center)	– 250	1085
c	– 13	925
d	437	– 286

Allowable stress

σ_a = 1300 kgf/cm²

When other stress in addition to axial stress exists, the combined stress shall be determined from the following formula, and the stress should be within the allowable value.

$$\sigma g = \sqrt{\sigma_{i\ell}^2 + \sigma_s^2 - \sigma_{i\ell} \cdot \sigma_s + 3(\tau + \tau_s)^2}$$

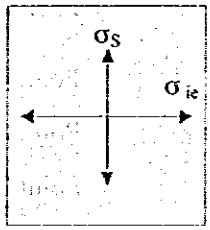

Where, σ_g : Combine stress in kgf/cm²

$\sigma_{i\ell}$: Inner extreme fiber stress kgf/cm²

σ_s : Bending stress of skin plate kgf/cm²

τ : Shearing stress of reinforcing girder kgf/cm²

τ_s : Shearing stress of skin plate kgf/cm²

Allowable stress $\sigma_{ga} = 1.1 \cdot \sigma_a = 1.1 \times 1300 = 1430$ kgf/cm^2

The result of combined stress.

Calculation Point	$\sigma_{i\ell}$	σ_s	τ	τ_s	σ_q
a	– 286	– 896	0	45	796
b	925	191	368	45	1108
b ~ c (center)	1085	191	0	45	1007
c	925	191	368	45	1108
d	– 286	– 896	0	45	746

(3) Outlet Pipe (ϕ 1400, ~ DAMAXIS)

(a) Design Pressure

According to the design pressure table, the design pressure of each case is as follows.

Case 1 : Under construction work (Exposed Pipe)

External pressure p_1 = 2.0 kgf/cm^2

Case 2 : After completion of work (Embedded Pipe)

Internal pressure

Point ① p_2 ① = H.W.L 155.300 + 0.8 – 111.500 = 44.600 m ≒ 4.5 kgf/cm^2

Point ② p_2 ② = H.W.L 155.300 + 0.8 – 110.544 = 45.556 m ≒ 4.6 kgf/cm^2

Point ③ p_2 ③ = H.W.L 155.300 + 0.8 – 105.719 = 50.381 m ≒ 5.0 kgf/cm^2

Point ④ p_2 ④ = H.W.L 155.300 + 0.8 – 97.870 = 58.230 m ≒ 5.8 kgf/cm^2

Case 3 : After completion of work (Embedded Pipe)

Internal pressure

Point ① p_3 ① = S.W.L 151.800 + 0 – 111.500 =42.400 m ≒ 4.3 kgf/cm^2

Point ② p_3 ② = S.W.L 151.800 + 0.178 – 110.544 =44.301 m ≒ 4.5 kgf/cm^2

Point ③ p_3 ③ = S.W.L 151.800 + 1.078 – 105.719 =53.897 m ≒ 5.4 kgf/cm^2

Point ④ p_3 ④ = S.W.L 151.800 + 2.543 – 97.870 =69.508 m ≒ 7.0 kgf/cm^2

Case 4 : After completion of work (Embedded Pipe)

Internal pressure

Point ① p_4 ① = N.W.L 148.900 + 0.8 – 111.500 = 39.156 m ≒ 3.9 kgf/cm^2

Point ② p_4 ② = N.W.L 148.900 + 0.8 – 110.544 = 43.981 m ≒ 4.4 kgf/cm^2

Point ③ p_4 ③ = N.W.L 148.900 + 1.8 – 105.719 = 51.830 m ≒ 4.2 kgf/cm^2

Point ④ p_4 ④ = N.W.L 148.900 + 1.8 – 97.870 = 56.650 m ≒ 5.7 kgf/cm^2

In general, pipe shell shall be supported temporarily internal pipe support or tigs during construction period so as not to deform the pipe shell harmfully. Therefore, case 2 and 4 shall be taken for the design pressure of outlet pipe (~ DAMAXIS).

Design pressure (ϕ 1400, ~ DAMAXIS)

Calculated Point	Internal Pressure	External Pressure
①	4.5	3.9
②	4.6	4.4
③	5.4	5.2
④	7.0	5.7

(b) Symbol Used

D_o : Inside diameter including corrosion thickness = 140.0 cm

D_o' : Outside diameter = 141.8 cm

D : Inside diameter excluding corrosion thickness = 140.3 cm

D_m : Diameter of center of pipe shell plate = 141.05 cm

r_o' : $D_o / 2$

r_m : $D_m / 2$

t_o : Pipe shell plate thickness including corrosion thickness = 0.9 cm

ε : Corrosion thickness = 0.15 mm

t : $t_o - \varepsilon$

ℓ : Interval of stiffener = 150 cm

tr : Stiffener thickness = 0.9 cm

hr : Stiffener height = 10.0 cm

These symbols are shown in figure next page.

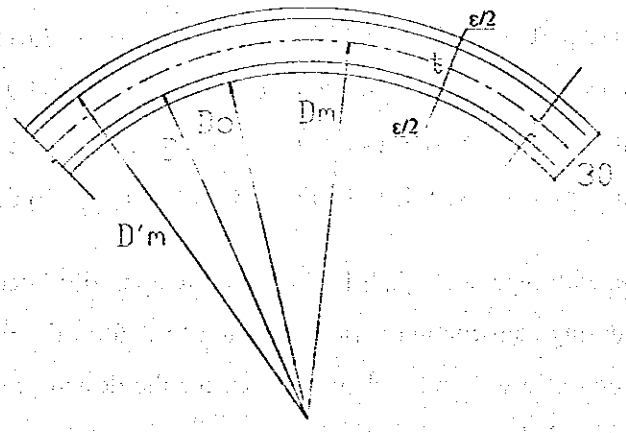
ε/2
t
Do
Dm
ε/2
30
D'm

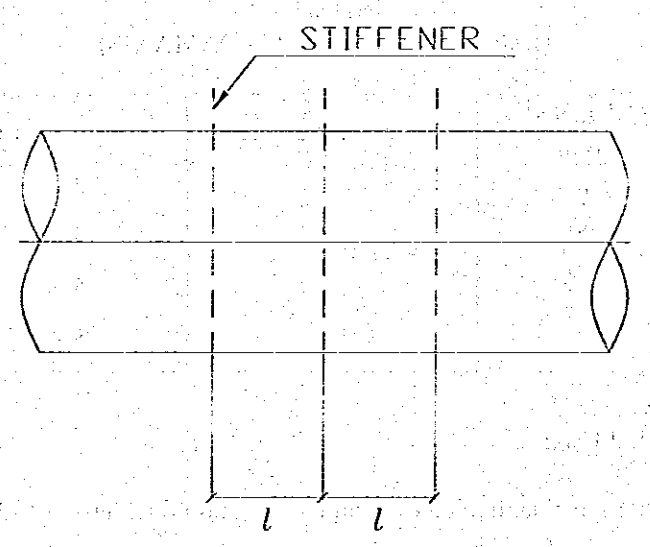
STIFFENER
l
l

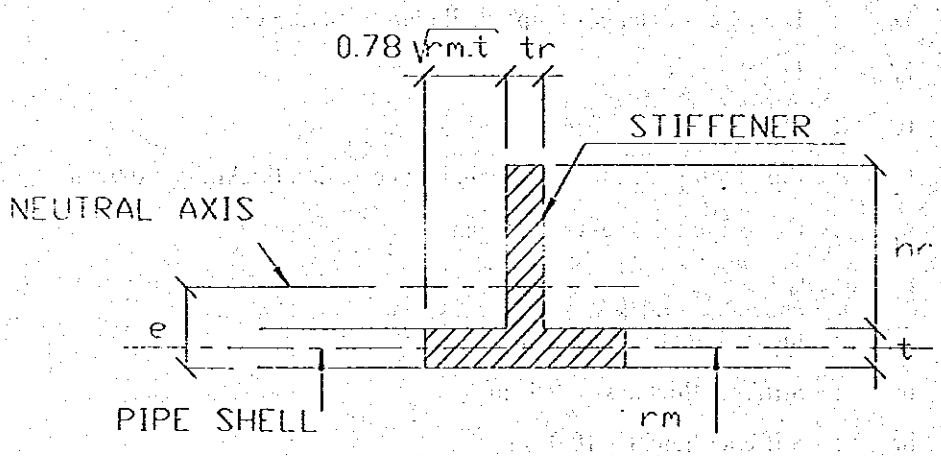
0.78 √rm.t
tr
STIFFENER
NEUTRAL AXIS
nr
e
t
PIPE SHELL
rm

(c) Minimum Thickness of Pipe Shell

The minimum plate thickness of pipe shell, t_o, is restricted as follows:

$$t_o \geqq \frac{D_o + 800}{400} \text{ (mm)}$$

and,

$$t_o \geqq 6 \text{ (mm)}$$

Result of thickness restricted

(mm)

No.	D_o	$\frac{D_o + 800}{400}$	t_o	Allowable Thickness
①	1400	5.5	9	6
②	1400	5.5	9	6
③	1400	5.5	9	6
④	1400	5.5	9	6

(d) Strength Against Internal Pressure

The strength of pipe shell in case-2 will be checked as follows.

(i) Stress due to internal pressure

- Circumferential Tensile Stress

$$\sigma_r = \frac{P_2 \cdot D}{2 \cdot t}$$

Result of circumferential tensile stress.

Allowable stress

$\sigma_{ra} = 0.54\ \sigma y = 0.54 \times 2400 \fallingdotseq 1300$ kgf/cm^2 (SM 400)

(kgf/cm^2)

No	P_2	σ_r
①	4.5	420
②	4.6	430
③	5.4	505
④	7.0	654

- Local Bending stress due to restarting the shell deformation by the stiffener.

$$\sigma_{db} = \frac{1.82 \cdot tr \cdot hr}{Ar} \times \frac{P_2 \cdot D}{2 \cdot t} = \frac{1.82 \cdot tr \cdot hr}{Ar} \times \sigma r$$

Where, $Ar = tr \cdot hr \cdot t \cdot (1.56 \sqrt{rm \cdot t} + tr)$

Result of stress

(mm)

No.	tr (cm)	hr (cm)	t (m)	Ar (cm^2)	σ_{db} (kgf/cm^2)
①	0.9	10	0.75	18.180	± 379
②	0.9	10	0.75	18.180	± 387
③	0.9	10	0.75	18.180	± 455
④	0.9	10	0.75	18.180	± 589

Allowable stress $\sigma_{db\,a} = 1.35 \times 0.54 \times \sigma y = 1.35 \times 0.54 \times 2400 \fallingdotseq 1775\ kgf/cm^2$ (SM 400)

This stress occurs when the pipe shell existence of stiffener.

$+\sigma_{db}$ occurs at the inner side of the pipe shell plate and $-\sigma_{db}$ at the outer side.

- Longitudinal Thermal Stress

$$\sigma_{t2} = \alpha \times E \times \Delta T$$

Where,

α : Coefficient of linear expansion = 1.2×10^{-5} / °C

E : Young's modulus = $2.1 \times 10^6\ kgf/cm^2$

ΔT : Variation of temperature = ± 20 °C

Thus,

σ_{t2} : $1.2 \times 10^{-5} \times 2.1 \times 10^6 \times (\pm 20) = \pm 504\ kgf/cm^2$

Allowable Stress

σ_{t2a} : $0.54 \times \sigma y = 0.54 \times 2400 \fallingdotseq 1300\ kgf/cm^2 \cdot$ (SM400)

- Stress due to Poission's Effect

The longitudinal movement of embedded pipe is not allowed, then the longitudinal stress occurs under the influence of σr.

$\sigma_{t3} = \nu \cdot \sigma_r$

Where,

ν : Poisson's ratio = 0.3

Result of stress

(kgf/cm²)

No	σr	σ_{t3}
①	420	126
②	430	129
③	505	151
④	654	196

Allowable Stress

$\sigma_{t3a} = 0.54 \times \sigma y$
$= 0.54 \times 2400$
$\fallingdotseq 1300$ (kgf/cm²) (SM400)

(ii) Sum of Stress

Circumferential stress

$$\sigma_1 = \sigma_r$$

Longitudinal Stress

$$\sigma_2 = \sigma_{db} + \sigma_{t2} + \sigma_{t3}$$

Combined stress

$$\sigma_g = \sqrt{\sigma_1^2 + \sigma_2^2 - \sigma_1 \cdot \sigma_2}$$

Allowable stress

$\sigma_{1a} = 0.54 \times \sigma y = 0.54 \times 2400 \fallingdotseq 1300$ (kgf/cm²) (SM400)

σ_{ta}
σ_{ga} $= 1.35 \times 0.54 \times \sigma y = 1.35 \times 0.54 \times 2400 \fallingdotseq 1775$ (kgf/cm²) (SM400)

Result of Stress.

(kgf/cm²)

No. \ Item	σ	$\sigma_{2\,max}$		$\sigma_{g\,max}$	
		Inner	Outer	Inner	Outer
①	420	1009	-757	878	1033
②	430	1020	-762	887	1046
③	505	1110	-807	963	1146
④	654	1289	-897	1117	1349

(e) Strength against External Pressure

(i) Strength of pipe shell

The critical buckling external pressure Pk is calculated by S. Timoshenko, Nagashima and Kamiduki's formula.

$$Pk = \frac{E_s \cdot t}{(1-\nu^2)\cdot r_o'} \times \left[\frac{1-\nu^2}{(n^2-1)\cdot m^2} + \frac{t^2}{12\cdot r_o'^2} \cdot \left\{ (n^2-1) + \frac{2n^2-1-\nu}{m} \right\} \right]$$

Where,

$$m \;:\; 1 + \left(\frac{n \times \ell'}{\pi \cdot r_o'} \right)^2$$

$$\ell' \;:\; (\ell + 1.56\sqrt{r_m t}\cdot\cos^{-1}\lambda)(1 + 0.037 \frac{\sqrt{r_m \cdot t}}{\ell + 1.56\sqrt{r_m \cdot t}\cdot\cos^{-1}\lambda} \cdot \frac{t^3}{I_3})$$

$$\lambda \;:\; 1 - (1+T)\cdot \frac{1 + \frac{tr}{1.56\sqrt{r_m \cdot t}}}{1 + \frac{S_o}{1.56\cdot\sqrt{r_m \cdot t}}}$$

$$T \;:\; \frac{2}{tr + 1.56\sqrt{r_m \cdot t}} \cdot \frac{\frac{r_o'^2}{t} - \frac{(tr + 1.56\sqrt{r_m \cdot t})\cdot r_o'^2}{S_o + 1.56\cdot t\sqrt{r_m \cdot t}}}{\frac{3}{\{3(1-\nu)\}^{0.75}} \cdot \left(\frac{r_o'}{t}\right)^{1.5} \cdot \frac{\sin h\beta\ell + \sin\beta\ell}{\cos h\beta\ell - \cos\beta\ell} + \frac{2r_o'^2}{S_o + 1.56\cdot t\cdot\sqrt{r_m \cdot t}}}$$

$$\beta \;:\; \frac{\{3(1-\nu^2)\}^{0.25}}{\sqrt{r_m + t}}$$

$$S_o \;:\; tr\cdot(t + hr)^3$$

$$I_3 \;:\; \frac{tr}{12}(hr + t)^3$$

E_S : Young's modulus of steel = 2.1 x 10^6 (kgf/cm^2)

ν : Poisson's ratio = 0.3

n : Number of wrinkles ≧ 2.

As the Pk value depends on n, the minimum value of Pk should trial and error by varying n.

Result of Critical buckling external pressure.

n	Pk (kgf/cm^2)
4	20.1
5	10.6
6	10.3
7	12.3

← Critical of critical buckling external

Safety factor

$$S = \frac{Pk}{P_2}$$

No	Pk	P_2	S
①	10.3	3.9	2.6
②		4.4	2.3
③		5.2	2.0
④		5.7	1.8

Allowable safety
$S \geqq 1.5$

(ii) Strength of Stiffener Ring

Here in this clause, a safety factor against buckling of stiffener ring shall be checked by E-Amstutz's formula.

$$\left(\frac{K_o}{r_m} + \frac{\sigma_N}{E_S}\right) \cdot \left(1 + \frac{r_m}{i^2} \cdot \frac{\sigma_N}{E_S}\right)^{1.5} = 1.68 \cdot \frac{r_m}{e} \cdot \frac{\sigma_F - \sigma_N}{E_S}\left(1 - \frac{1}{4} \cdot \frac{r_m}{e} \cdot \frac{\sigma_F - \sigma_N}{E_S}\right)$$

Where,

K_o : Small gap between concrete and the outer surface of pipe shell
$= 4 \times 10^{-4}$ (cm)

σ_N : Circumferential stress of pipe shell (kgf/cm^2)

σ_F : Yield strength of material = 2400 (kgf/cm^2) (SM 400)

i : Radius of gyration of stiffener composite section
= 3.403

e : Distance between the neutral axis of stiffener composite section and the inner surface of pipe = 3.058 (cm)

Thus, $\sigma_N \fallingdotseq 1732$ kgf/cm^2), L / R = 1.002

Where,

L : The value of the left side term of equation

R : The value of the right side term of equation

Using the σ_N, the critical buckling stress of stiffener is expressed as follows

$$\sigma cr = \sigma_N \cdot \left\{1 - \frac{r_o'}{e} \cdot \frac{\sigma_F - \sigma_N}{\left(1 + \frac{3}{2}\pi\right) \cdot E_S}\right\}$$

$$= \quad 1732 \times \left\{ 1 - \frac{70.9}{3.058} \times \frac{2400 - 1732}{\left(1 + \frac{3}{2}\pi\right) \times 2.1 \times 10^6} \right\}$$

$$= \quad 1730 \ (\mathrm{kgf/cm^2})$$

The average compressive stress of the stiffener σc, can be calculated by succeeding formula:

$$\sigma c \quad = \quad \frac{P' r_o' \cdot \left(tr + 1.56 \cdot \sqrt{r_m \cdot t}\right)}{S_o + 1.56 \cdot t \cdot \sqrt{r_m \cdot t}}$$

Where,

$$P' \quad = \quad \frac{p_2}{tr + 1.56 \cdot \sqrt{r_m \cdot t}} \cdot \left\{ (tr + 1.56 \cdot \sqrt{r_m \cdot t} + 2 \cdot \right.$$

$$\left. \frac{\dfrac{\gamma_o'^2}{t} - \dfrac{(tr + 1.56 \cdot \sqrt{r_m \cdot t}) \cdot \gamma_o'^2}{S_o + 1.56 \cdot t \cdot \sqrt{r_m \cdot t}}}{\dfrac{3}{\{3 \cdot (1 - \nu^2)\}^{0.75}} \cdot \left(\dfrac{r_o'}{t}\right)^{1.5} \cdot \dfrac{\sin h\beta\ell + \sin \beta\ell}{\cos h\beta\ell - \cos \beta\ell} + \dfrac{2 r_o'^2}{S_o + 1.56 \cdot t \cdot \sqrt{r_m \cdot t}}} \right\}$$

Result of = σc and safety factor $\sigma cr / \sigma c$

No.	p_2 (kgf/cm²)	p' (kgf/cm²)	σc (kgf/cm²)	σcr (kgf/cm²)	$S = \frac{\sigma cr}{\sigma c}$
①	3.9	5.0	241	1730	7.2
②	4.4	5.7	272		6.4
③	5.2	6.7	321		5.4
④	5.7	7.4	352		4.9

Safety factor

$$S \quad = \quad \frac{\sigma cr}{\sigma c} > 1.5$$

(4) Outlet pipe (DAMAXIS ~, Ø 1400, Ø 6500, Ø 250)

(a) Design Pressure

According to the design pressure table, the design pressure of each case is as follows:

Case 1 : Under construction work (Exposed Pipe)

External Pressure $p_1 = 2.0$ kgf/cm^2 (Grouting Pressure)

Case 2 : After completion of work (Embedded Pipe)

Internal pressure

Point ⑤ p_2 ⑤ = H.W.L 155.300 + hw 0.8 m – EL. 93.050 = 63.050 m

≒ 6.3 kgf/cm^2

Point ⑥ p_2 ⑥ = H.W.L 155.300 + hw 0.8 m – EL. 90.638 = 65.462 m

≒ 6.6 kgf/cm^2

Point ⑦ p_2 ⑦ = H.W.L 155.300 + hw 0.8 m – EL. 85.900 = 71.400 m

ϕ650

≒ 7.1 kgf/cm^2

ϕ650 p_2 = H.W.L 155.300 + hw 0.8 m – EL. 85.900 = 70.200 m

ϕ250

≒ 7.0 kgf/cm^2

Case 3 : After completion of work (Embedded Pipe)

Internal pressure

Point ⑤ p_3 ⑤ = S.W.L 151.800 + 20.343 m – EL. 93.050 = 79.093 m

≒ 7.9 kgf/cm^2

Point ⑥ p_3 ⑥ = S.W.L 151.800 + 22.729 m – EL. 90.638 = 89.762 m

≒ 9.0 kgf/cm^2

Point ⑦ p_3 ⑦ = S.W.L 151.800 + 28.600 m – EL. 84.700 = 95.700 m

ϕ650

≒ 9.6 kgf/cm^2

ϕ650 p_3 = S.W.L 151.800 + 28.600 m – EL. 85.900 = 94.500 m

ϕ250

≒ 9.5 kgf/cm^2

Then design pressure shall be shown under the table.

Design Pressure (DAMAXIS ~ ϕ1600, ϕ650, ϕ250)

(kgf/cm^2)

Item	External Pressure (Exposed Pipe)	Internal Pressure (Embedded Pipe)
⑤	7.9	2.0 (Grouting Pressure)
⑥	9.0	
⑦	9.6	
Ø 650	9.6	
Ø 250	9.5	

(b) Symbols Used

Symbol used shall be shown 3.2.

(cm)

Item	D_o	D'_o	D	t_o	ε	ℓ	tr	hr
⑤	140	141.8	140.15	0.9	0.15	150	0.9	10.0
⑥	140	141.8	140.15	0.9	0.15	150	0.9	10.0
⑦	140	141.8	140.15	0.9	0.15	150	0.9	10.0
Ø 650	65	66.8	65.15	0.9	0.15	150	0.9	10.0
Ø 250	25	26.2	25.15	0.6	0.15	150	0.6	7.5

(c) Minimum Thickness of Pipe Shell

The minimum plate thickness of pipe shell, t_o, is restricted as follows.

$$\tau_o \geqq \frac{D_o + 800}{400} \text{ (mm) and } t_o \geqq 6.0 \text{ (mm)}$$

Result of thickness restricted

(cm)

Item	D_o	$\frac{D_o + 800}{400}$	t_o	Allowable Thickness
⑤	1400	5.5	9	6
⑥	1400	5.5	9	6
⑦	1400	5.5	9	6
Ø 650	650	3.6	9	6
Ø 250	250	2.6	6	6

(d) Strength Against Internal Pressure

The strength of pipe shell will be checked as follows.

(i) Stress due to internal pressure

- Circumferential Tensile Stress

$$\sigma_1 = \frac{P \cdot D}{2t}$$

Result of thickness restricted

(kgf/cm²)

Item	P	σr
⑤	7.9	738
⑥	9.0	841
⑦	9.6	897
Ø 650	9.6	417
Ø 250	9.5	265

Allowable Stress

σ_{ta} = 0.54 x σy
= 0.54 x 2400
≒ 1300 (kgf/cm²) (SM400)

- Local Bending Stress due to Restarting he shell Deformation by the stiffener.

$$\sigma_{db} = \frac{1.82 \cdot tr \cdot hr}{Ar} \cdot \frac{P \cdot D}{2t} = \frac{1.82 \cdot tr \cdot hr}{Ar} \cdot \sigma r$$

Where, $Ar = tr \cdot hr + t \cdot (1.56 \cdot \sqrt{r_m \cdot t} + tr)$

Result of Stress

Item	tr (cm)	hr (cm)	t (cm)	Ar (cm^2)	σ_{db} (kgf/cm^2)
⑤	0.9	10.0	0.75	18.180	± 665
⑥	0.9	10.0	0.75	18.180	± 758
⑦	0.9	10.0	0.75	18.180	± 808
Ø 650	0.9	10.0	0.75	15.491	± 441
Ø 250	0.6	7.5	0.45	6.455	± 337

Allowable Stress

σ_{db} = 1.1 x 0.54 x σy
= 1.35 x 0.54 x 2400
≒ 1775 (kgf/cm^2) (SM400)

Note. $+\sigma_{db}$: Inner side of pipe shell
$-\sigma_{db}$: Outer side of pipe shell

- Longitudinal Thermal Stress

$\sigma_{t2} = \alpha \times E \times \Delta T$

Where,

α : Coefficient of linear expansion = 1.2×10^{-5} / °C

E : Young's modulus = 2.1×10^6 kgf/cm^2

ΔT : variation of temperature = ± 20 ° C

Thus,

$\sigma_{t2} = 1.2 \times 10^{-5} \times 2.1 \times 10^6 \times (\pm 20) = \pm 504$ kgf/cm^2

Allowable stress

$\sigma_{ta} = 0.54 \times \sigma y = 0.54 \times 2400 \fallingdotseq 1300$ kgf/cm^2 (SM 400)

- Stress due to Poisson's Effect

The longitudinal movement of embedded pipe is not allowed, then the longitudinal stress occurs under the influence of σr.

$\sigma_{t3} = \nu \times \sigma r$

Where,

ν : Poisson's ratio = 0.3

Result of stress

(kgf/cm²)

Item	σr	σ_{t3}
⑤	738	221
⑥	841	252
⑦	897	269
Ø 650	417	125
Ø 250	265	80

Allowable Stress

$\sigma_{t3a} = 0.54 \times \sigma y$
$= 0.54 \times 2400$
$\fallingdotseq 1300$ (kgf/cm²) (SM400)

(ii) Sum of Stress

Circumferential Stress

$$\sigma_1 = \sigma_2$$

Longitudinal Stress

$$\sigma_2 = \sigma_{db} + \sigma_{t2} + \sigma_{t3}$$

Combined Stress

$$\sigma_g = \sqrt{\sigma_1^2 + \sigma_2^2 - \sigma_1\sigma_2}$$

Result of Stress

Item	σ_1	σ_{2max}		σ_{gmax}	
		Inner	Outer	Inner	Outer
⑤	738	1390	– 948	1205	1464
⑥	841	1514	– 1009	1314	1605
⑦	897	1581	– 1043	1374	1682
Ø 650	417	1070	– 820	938	1090
Ø 250	265	920	– 761	821	923

Allowable stress

$\sigma_{1a} = 0.54 \times \sigma y = 0.54 \times 2400 \fallingdotseq 1300$ kgf/cm² (SM 400)

$\sigma_{2a}, \sigma_{ga} = 1.35 \times 0.54 \times \sigma y$

$= 1.35 \times 0.54 \times 2400 \fallingdotseq 1775$ kgf/cm² (SM 400)

(e) Strength Against External Pressure

(i) Strength of pipe shell

The critical buckling external pressure p_K is calculated by Tokugawa's formula.

$$p_K = \frac{Es \cdot \frac{t}{D'_o}}{n^2 - 1 + \frac{\alpha^2}{2}} \cdot \left[\frac{2\alpha^4}{(n^2+\alpha^2)^2} + \frac{2}{3} \cdot \frac{1}{1-\nu^2} \cdot \left(\frac{t}{D'_o}\right)^2 \cdot \left\{ (n^2+\alpha^2)^2 - \frac{n^4 \cdot (2n^2-1)}{(n^2+d^2)^2} \right\} \right]$$

as $\alpha^2 \ll 1$

Then

$$p_K \fallingdotseq 2.4 \cdot Es \cdot \left(\frac{D'_o}{\ell}\right) \cdot \left(\frac{t}{D'_o}\right) \cdot 2.5$$

Where, ℓ : Interval of stiffener = 150 cm

Es : Young's modulus = 2.1×10^6 kgf/cm^2

Result of "p_K"

Item	D'_o (cm)	t (cm)	p_K (kgf/cm^2)	p (kgf/cm^2)	S
⑤	141.8	0.75	9.7	2.0	4.8
⑥	141.8	0.75	9.7		4.8
⑦	141.8	0.75	9.7		4.8
Ø 650	66.8	0.75	30.0		15.0
Ø 250	26.2	0.45	34.0		17.0

Safety factor

$$S = \frac{p_K}{p} \geqq 1.5$$

(ii) Strength of Stiffener Ring

Here in this clause, a safety factor against buckling of stiffener ring shall be checked by under by under the formula.

$$p_K = \frac{24 \cdot E \cdot I}{(1-\nu^2) \cdot D_o'^2 \cdot \ell}$$

Where,

E : Young's modulus = 2.1×10^6 kgf/cm^2

I : Inertia of stiffer cm^4

ν : Poisson's ratio = 0.3

ℓ : Interval of stiffener = 150 cm

Result of "p_K"

Item	I (cm^4)	D'_o (cm)	p_K (kgf/cm^2)	P (kgf/cm^2)	S
⑤	206	141.8	26.7		13
⑥	206	141.8	26.7		13
⑦	206	141.8	26.7	2.0	13
Ø 650	184	66.8	227.9		114
Ø 250	43	26.2	873.9		437

Safety factor

$$S = \frac{p_K}{p} \geqq 1.5$$

2.7.6 Control Gate (Ø 0.650 m)

(1) Design Data

Type of Gate	:	Jet Flow Gate
Water level	:	Design water level
		S.W.L 151.800 + water Hammer 28.6 m
		Operating water level
		H.W.L 155.300 + wave height 0.8 m
Elevation of orifice center	:	EL. 85.900
Orifice diameter	:	Ø 0.650 m
Type of Hoist	:	Electrically screw spindle
Operating speed	:	0.100 $^{m}/_{min}$ ± 10%
Power Source	:	380 V, 50 Hz, 3 Ø 4 W
Corrosion Allowance	:	1.0 mm (one face)
Allowable Stress	:	Tension, compression 0,5 σy as a basis shear
		0,5 σy / $\sqrt{3}$
Allowable Deflection	:	Under 1/2000

(2) Design hydraulic pressure load

(a) Design Pressure

p = S.W.L 151.800 + water Hummer 28.6 m – EL. 85.900

= 94.5 m

≒ 95 kgf/cm²

in Operating

p_o = H.W.L 155.300 + wave height 0.8 – EL. 85.900

= 70.2 m

≒ 7.1 kgf/cm²

Thus, calculated pressure shall be employed only "p"

(b) Pressure Load

$$P = \frac{\pi}{4} \cdot D_S^2 \cdot P$$

Where, D_S : Diameter of "O" ring seal circle = 75.0 (cm)

$$P = \frac{\pi}{4} \times 75.0^2 \times 9.5$$

$$= 41970 \text{ kgf}$$

in Operating

$$P_o = \frac{\pi}{4} \cdot D_S^2 \cdot p_o$$

$$= \frac{\pi}{4} \times 75.0^2 \times 7.1$$

$$= 31367 \text{ kgf}$$

(3) Strength of gate leaf

(a) Hydraulic Pressure Load

$$W = Hs \cdot D \cdot \Delta h$$

Where,

W : Hydraulic pressure load (tf)

D : Orifice diameter = 0.650 (m)

Δh : Unit of height = 0.01 (m)

Hs : Design Head = 94.5 (m)

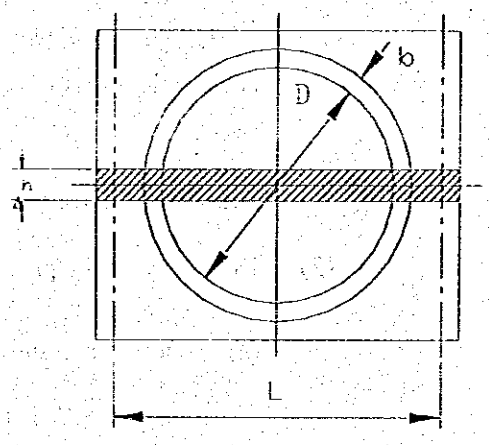

$$W = 94.5 \times 0.650 \times 0.01$$

$$= 0.614 \text{ (tf)}$$

(b) Pressure Load of Seal Ring

$$Ps = Hs \cdot b \cdot \Delta h$$

Where, b : Width of seal ring = 0.050 m

$$Ps = 94.5 \times 0.050 \times 0.01$$

$$= 0.047 \text{ (tf)}$$

(c) Bending Moment and Shearing Force

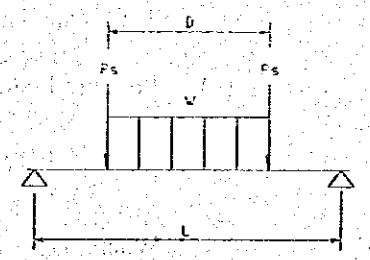

Bending Moment

$$M = 1/8\,(2L - D) \cdot W + ½\,(L - D) \cdot Ps$$

Where, L : Span of Gate Leaf = 99.0 (cm)

$$M = 1/8 \times (2 \times 99 - 65) \times 0.614 + ½ \times (99 - 65) \times 0.047$$

$$= 11.007 \text{ (tf·cm)}$$

Shearing Force

$$Q = \tfrac{1}{2}(W + 2 \cdot p)$$
$$= \tfrac{1}{2} \times (0.614 + 2 \times 0.047)$$
$$= 0.354 \ (tf)$$

(d) Section Properties of Gate Leaf

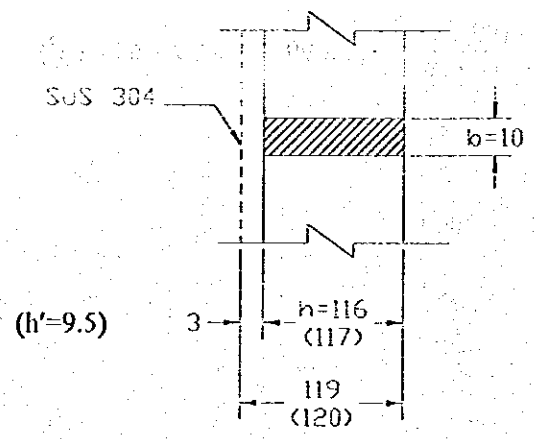

$$I = \frac{bh^3}{12} = \frac{1.0 \times 11.6^3}{12} = 131 \ (cm^4)$$

$$Z = \frac{bh^2}{6} = \frac{1.0 \times 11.6^2}{6} = 22 \ (cm^3)$$

$$A = bh = 1.0 \times 11.6 = 11.6 \ (cm^2)$$

$$A_W = bh' = 1.0 \times 9.5 = 9.5 \ (cm^2)$$

(e) Stress of Gate Leaf

Bending Stress

$$\sigma = \frac{M}{Z} = \frac{11.007 \times 10^3}{22} = 500 \ (kgf/cm^2)$$

Shearing Stress

$$\tau = \frac{Q}{A_W} = \frac{0.354 \times 10^3}{9.5} = 37 \ (kgf/cm^2)$$

Allowable stress

$$\sigma a = 0.5 \times \sigma y \times 0.92$$
$$= 0.5 \times 2400 \times 0.92$$
$$= 1104 \ kgf/cm^2 \ (\text{gravity SM 400})$$

$$\tau a = \frac{\sigma a}{\sqrt{3}} = \frac{1104}{\sqrt{3}} = 637 \ kgf/cm^2$$

(f) Deflection of Gate Leaf

$$\delta = \frac{W}{384 \cdot E \cdot I}(8 \cdot L^3 \cdot 4 \cdot L \cdot D^2 + D^3) + \frac{P \cdot (L \cdot D)}{48 \cdot E \cdot I} \cdot (2 \cdot L^2 \cdot 2L \cdot D - D^2)$$

Where,

δ : Deflection (cm)

E : Young modulus = 2.1×10^6 (kgf/cm^2) (quarity SM 400)

I : Inatia of Gate Leaf = 131 (cm^4)

$$\delta = \frac{0.614 \times 10^3}{384 \times 2.1 \times 10^6 \times 131} \times (8 \times 99^3 - 4 \times 99 \times 65^2 + 65^3)$$

$$+ \frac{0.047 \times 10^3 \times (99 - 65)}{48 \times 2.1 \times 10^6 \times 131} \times (2 \times 99^2 + 2 \times 99 \times 65 - 65^2)$$

$$= 0.040 \text{ (cm)}$$

$$\delta/L = \frac{0.040}{99} = \frac{1}{2450} > \frac{1}{2000}$$

(4) Bearing plate

(a) Bearing Stress

$$\sigma b = \frac{P}{2 \cdot A}$$

Where,

P : Pressure Load = 31367 kgf

A : Bearing stress area

$= \ell \cdot B \cdot \eta$

ℓ : Length of Bearing plate = 65.0 (cm)

B : Width of Bearing plate = 8.0 (cm)

η : Efficiency of bolt hole = 0.7 (cm)

$$\sigma b = \frac{41970}{2 \times 65 \times 8.0 \times 0.7}$$

$$= 58 \text{ (kgf/cm}^2\text{)}$$

Allowable stress

σba = 60 kgf/cm^2 (quarity LBC 3)

(5) Calculation for hoist

(a) Hoisting Load

Gate leaf self weight

W_G = 1.000 tf

Friction of seal ring due to water pressure

$Fs = \mu \cdot Ps$

Where,

μ : Friction coefficient = 0.6

Ps : Pressure load of seal ring

$$Ps = \frac{(0.75^2 - 0.65^2) \cdot \pi}{4} \times 71$$

$$= 7.807 \text{ tf}$$

$$Fs = 0.6 \times 7.807$$

$$= 4.684 \text{ tf}$$

Friction of Bearing plate

$Fb = \mu \cdot P$

Where, μ : friction coefficient = 0.6

$$Fb = 0.6 \times 31.367$$

$$= 18.802 \text{ tf}$$

Spindle self weight

Ws = 0.1 tf

(b) Sum of Loads

Item	Rasing	Lowering
W_G	↓ 1.000	↓ 1.000
W_S	↓ 4.684	↑ 4.684
W_b	↓ 18.802	↑ 18.802
W_S	↓ 0.100	↓ 0.100
Sum	↓ 24.586	↑ 22.386

Thus, the design hoisting load is 25 tf rasing operation 23 tf in lowering operation.

(c) Spindle Torque

$$Ts = \frac{W}{N \cdot f}$$

Where,

Ts : Spindle Torque (kgf·cm)

W : Maximum hosting load = 25000 kgf

f : Coefficient of thrust

$$= \frac{2 \cdot (\theta \cdot \pi \cdot d - \mu \cdot \ell)}{d \cdot (\theta \cdot \ell + \mu \cdot \pi \cdot d)}$$

Where,

θ : cos 15 (Metric screw thread)

d : clear diameter of spindle = 9.5 cm

μ : friction coefficient of screw = 1.2

$$f = \frac{2 \times (\cos 15 \times \pi \times 9.5 - 0.2 \times 1.2)}{9.5 \times (\cos 15 \times 1.2 + 0.2 \times \pi \times 9.5)}$$

$$= 0.844$$

N : Number of spindle = 1

$$Ts = \frac{25000}{1 \times 0.844}$$

$$= 29621 \text{ kgf·cm}$$

(d) Requirement revolution number of hoist

$$Ns' = \frac{V}{\ell}$$

Where,

N′s : Requirement revolution number of hoist (r.p.m)

V : Hoisting speed = 0.100 $^{m}/_{min}$

$$Ns' = \frac{0.100}{0.012}$$

$$= 8.334 \text{ r.p.m}$$

(e) Hoisting Speed

$$V = Nm \cdot i \cdot \ell$$

Where,

V : Hoisting Speed ($^{m}/_{min}$)

Nm : revolution of motor

i : ratio of reducer = 1/156.47.

$$V = 1350 \times 1/156.47 \times 0.012$$
$$= 0.103\ ^{m}/_{min}$$

(f) Motor Power

$$Pu' = \frac{N \cdot Ts \cdot Ns}{97400 \times \eta}$$

Where, η : Mechanical Efficiency = 0.55

$$Pu' = \frac{1 \times 29621 \times 8.334}{97400 \times 0.55}$$
$$= 4.608 \text{ Kw}$$

Therefore, 5.5 Kw induction motor should be adopted.

2.7.7 Control Gate (Ø 0.250 m)

(1) Design Data

Type of Gate	:	Jet Flow Gate
Water level	:	Design water level
		S.W.L 151.800 + water Hammer 28.6 m
		Operating water level
		H.W.L 155.300 + wave height 0.8 m
Elevation of orifice center	:	EL. 85.450
Orifice	:	Ø 0.250 m
Type of Hoist	:	Electrically screw spindle type
Operating speed	:	0.100 $^{m}/_{min}$ ± 10%
Power Source	:	380 V, 50 Hz, 3 Ø 4 W
Corrosion Allowance	:	1.0 mm (one face)
Allowable Stress	:	Tension, Compression 0,5 σy as a basis shear
		0,5 σy / $\sqrt{3}$
Allowable Deflection	:	Under 1/2000

(2) Design hydraulic pressure load

(a) Design Pressure

p = S.W.L 151.800 + water Hummer 28.6 m – EL. 85.450

= 94.95 m

≒ 9.5 kgf/cm²

in Operating

p_o = H.W.L 155.300 + wave height 0.8 – EL. 85.450

= 70.65 m

≒ 7.1 kgf/cm²

(b) Pressure Load

$$P = \frac{\pi}{4} \cdot D_S^2 \cdot P$$

Where, D_S : Diameter of "O" ring seal circle = 31.0 (cm)

$$P = \frac{\pi}{4} \times 31.0^2 \times 9.5$$

= 7170 kgf

in Operating

$$Po = \frac{\pi}{4} \cdot D_S^2 \cdot p_o$$

$$= \frac{\pi}{4} \times 31.0^2 \times 7.1$$

$$= 535.9 \text{ kgf}$$

(3) Strength of gate leaf

(a) Hydraulic Pressure Load

$$W = Hs \cdot D \cdot \Delta h$$

Where,

W : Hydraulic pressure load (tf)

D : Orifice diameter = 0.250 (m)

Δh : Unit of height = 0.01 (m)

Hs : Design Head = 94.45 (m)

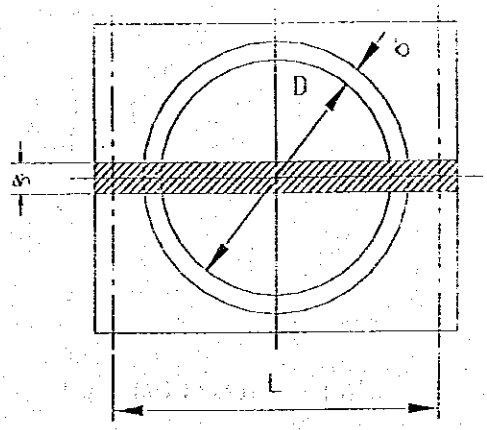

$$W = 94.95 \times 0.250 \times 0.01$$

$$= 0.237 \text{ (tf)}$$

(b) Pressure Load of Seal Ring

$$Ps = Hs \cdot b \cdot \Delta h$$

Where, b : Width of seal ring = 0.030 m

$$Ps = 94.95 \times 0.030 \times 0.01$$

$$= 0.028 \text{ (tf)}$$

(c) Bending Moment and Shearing Force

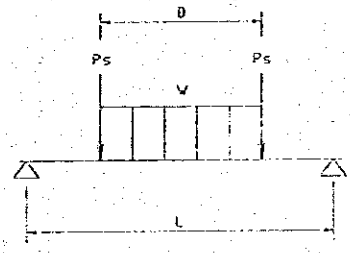

Bending Moment

$$M = 1/8\,(2L - D) \cdot W + ½\,(L - D) \cdot Ps$$

Where, L : Span of Gate Leaf = 45.5 (cm)

$$M = 1/8 \times (2 \times 45.5 - 25) \times 0.237 + ½ \times (45.5 - 25) \times 0.028$$

$$= 2.242 \text{ (tf·cm)}$$

Shearing Force

$$Q = \frac{1}{2}(W + 2 \cdot p)$$
$$= \frac{1}{2} \times (0.237 + 2 \times 0.028)$$
$$= 0.147 \text{ (tf)}$$

(d) Section Properties of Gate Leaf

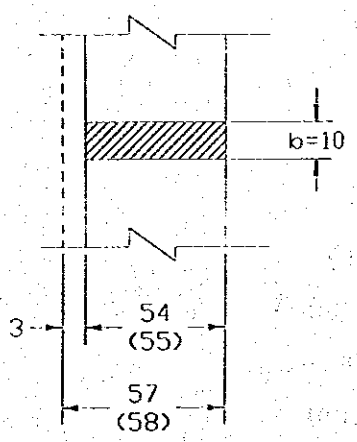

$$I = \frac{bh^3}{12} = \frac{1.0 \times 5.4^3}{12} = 13.122 \text{ (cm}^4\text{)}$$

$$Z = \frac{bh^2}{6} = \frac{1.0 \times 5.4^2}{6} = 4.86 \text{ (cm}^3\text{)}$$

$$A = bh = 1.0 \times 5.4 = 5.4 \text{ (cm}^2\text{)}$$

$$A_W = bh' = 1.0 \times 3.8 = 3.8 \text{ (cm}^2\text{)} \quad (h'=3.8)$$

(e) Stress of Gate Leaf

Bending Stress

$$\sigma = \frac{M}{Z} = \frac{2.242 \times 10^3}{4.86} = 461 \text{ (kgf/cm}^2\text{)}$$

Shearing Stress

$$\tau = \frac{Q}{A_W} = \frac{0.147 \times 10^3}{3.8} = 39 \text{ (kgf/cm}^2\text{)}$$

Allowable stress

$$\sigma a = 0.5 \times \sigma y \times 0.92$$
$$= 0.5 \times 2400 \times 0.92$$
$$= 1104 \text{ kgf/cm}^2 \text{ (gravity SM 400)}$$

$$\tau a = \frac{\sigma a}{\sqrt{3}} = \frac{1104}{\sqrt{3}} = 637 \text{ kgf/cm}^2$$

(f) Deflection of Gate Leaf

$$\delta = \frac{W}{384 \cdot E \cdot I}(8 \cdot L^3 - 4 \cdot L \cdot D^2 + D^3) + \frac{P \cdot (L - D)}{48 \cdot E \cdot I} \cdot (2 \cdot L^2 + 2L \cdot D - D^2)$$

Where,

δ : Deflection (cm)

E : Young modulus = 2.1×10^6 (kgf/cm^2) (gravity SM 400)

I : Inatia of Gate Leaf = 13.122 (cm^4)

$$\delta = \frac{0.237 \times 10^3}{384 \times 2.1 \times 10^6 \times 13.122} \times (8 \times 45.5^3 - 4 \times 45.5 \times 25^2 + 25^3)$$

$$+ \frac{0.028 \times 10^3 \times (45.5 \times 25)}{48 \times 2.1 \times 10^6 \times 13.122} \times (2 \times 45.5^2 + 2 \times 45.5 \times 25 - 25^2)$$

$$= 0.017 \text{ (cm)}$$

$$\delta/L = \frac{0.017}{45.5} = \frac{1}{2646} > \frac{1}{2000}$$

(4) Bearing plate

(a) Bearing Stress

$$\sigma b = \frac{P}{2 \cdot A}$$

Where,

P : Pressure Load = 5434 kgf

A : Bearing stress area

$= \ell \cdot B \cdot \eta$

ℓ : Length of Bearing plate = 265.0 (cm)

B : Width of Bearing plate = 4.5 (cm)

η : Efficiency of bolt hole = 0.6 (cm)

$$\sigma b = \frac{7170}{2 \times 25 \times 4.5 \times 0.6}$$

$$= 53 \text{ (kgf/cm}^2\text{)}$$

Allowable stress

σba = 60 kgf/cm^2 (quarity LBC 3)

(5) Calculation for hoist

(a) Hoisting Load

Gate leaf self weight

$W_G = 0.1000$ tf

Friction of seal ring due to water pressure

$Fs = \mu \cdot Ps$

Where,

μ : Friction coefficient = 0.6

Ps : Pressure load of seal ring

$$Ps = \frac{(0.31^2 - 0.25^2) \cdot \pi}{4} \times 71$$

$$= 1.874 \text{ tf}$$

$Fs = 0.6 \times 1.874$

$= 1.124$ tf

Friction of Bearing plate

$Fb = \mu \cdot P$

Where, μ : Friction coefficient = 0.6

$Fb = 0.6 \times 5.359$

$= 3.215$ tf

Spindle self weight

$Ws = 0.010$ tf

(b) Sum of Loads

Item	Rasing	Lowering
W_G	↓ 0.100	↓ 0.100
W_S	↓ 1.124	↑ 1.124
W_b	↓ 3.215	↑ 3.215
W_S	↓ 0.010	↓ 0.010
Sum	↓ 4.449	↑ 4.229

Thus, the design hoisting load is 5 tf.

(c) Spindle Torque

$$Ts = \frac{W}{N \cdot f}$$

Where,

Ts : Spindle Torque (kgf·cm)

W : Maximum hosting load = 25000 kgf

f : Coefficient of thrust

$$= \frac{2 \cdot (\theta \cdot \pi \cdot d - \mu \cdot \ell)}{d \cdot (\theta \cdot \ell + \mu \cdot \pi \cdot d)}$$

Where,

θ : cos 15 (Metric screw thread)

d : clear diameter of spindle = 4.4 cm

μ : friction coefficient of screw = 0.2

$$f = \frac{2 \times (\cos 15 \times \pi \times 4.4 - 0.2 \times 0.8)}{4.4 \times (\cos 15 \times 0.8 + 0.2 \times \pi \times 4.4)}$$

$$= 1.6952$$

N : Number of spindle = 1

$$Ts = \frac{5000}{1 \times 1.6952}$$

$$= 2950 \text{ kgf·cm}$$

(d) Requirement revolution number of hoist

$$Ns' = \frac{V}{\ell}$$

Where,

N's : Requirement revolution number of hoist (r.p.m)

V : Hoisting speed = 0.100 m/min

$$Ns' = \frac{0.100}{0.008}$$

$$= 12.5 \text{ r.p.m}$$

(e) Hoisting Speed

$$V = Nm \cdot i \cdot \ell$$

Where,

V : Hoisting Speed ($^{m}/_{min}$)

Nm : revolution of motor

i : ratio of reducer = 1/156.47

$$V = 1350 \times 1/105 \times 0.008$$

$$= 0.103\ ^{m}/_{min}$$

(f) Motor Power

$$Pu' = \frac{N \cdot Ts \cdot Ns}{97400 \times \eta}$$

Where, η : Mechanical Efficiency = 0.55

$$Pu' = \frac{1 \times 2950 \times 12.5}{97400 \times 0.3}$$

$$= 1.3\ Kw$$

Therefore, 1.5 Kw induction motor should be adopted.

2.7.8 Guard Gate (Ø 0.650 m)

(1) Design Data

Type of Gate	:	Height Pressure Slide Gate
Water level	:	Design Water Level
		S.W.L 151.800 + Water Hammer 28.6 m
		Operating water level
Rasing		pressure balance
Lowering		H.W.L 155.300 + Wave Height 0.8 m
Elevation of center	:	EL. 85.900
Nominal Diameter	:	Ø 0.650 m
Type of Hoist	:	Electrically driven screw spindle type
Operating speed	:	0.1 $^{m}/_{min}$ ± 10%
Power Source	:	380 V, 50 Hz, 3 Ø 4 W
Corrosion Allowance	:	1.0 mm (one face)
Allowable Stress for steel	:	Tension, Compression 0,5 σy as a basis shearing 0,5 σy/$\sqrt{3}$
Allowable Deflection	:	1/2000

(2) Design hydraulic pressure load

(a) Design Pressure

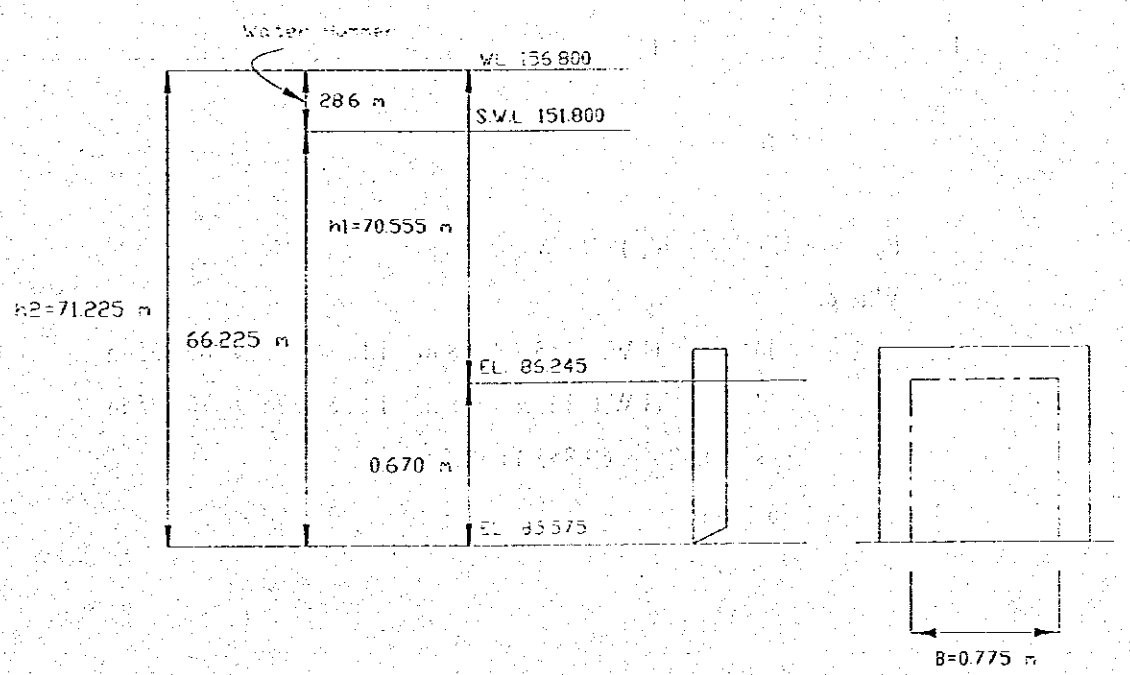

$P = \frac{1}{2} \cdot (h_2^2 - h_1^2) \cdot B \cdot W_o$

Where,

h_1 = S.W.L 151.800 + Water Hammer 28.6 – EL. 86.245 = 94.155 m

h_2 = S.W.L 151.800 + Water Hammer 28.6 – EL. 85.575 = 94.825 m

B : Seal span = 0.775 m

W : Unit of water weight = 1.0 tf/m^3

$P = \frac{1}{2} \times (94.825^2 - 94.155^2) \times 0.775 \times 1.0$

$\fallingdotseq$ 49.064 tf

(b) Operation Pressure

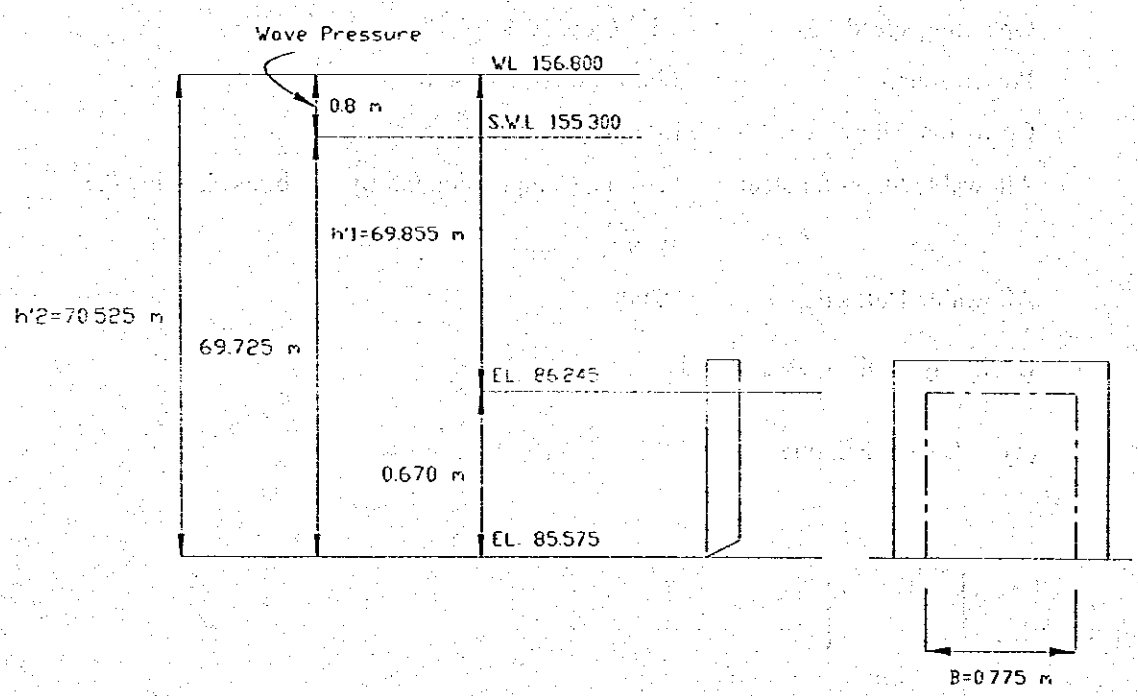

$P_o = \frac{1}{2} \cdot (h'^2_2 - h'^2_1) \cdot B \cdot W_o$

Where,

h'_1 : H.W.L 155.3 + 0.8 m – EL. 86.245 = 69.855 m

h'_1 : H.W.L 155.3 + 0.8 m – EL. 85.575 = 70.525 m

$P_o = \frac{1}{2} \times (70.525^2 \times 69.855^2) \times 0.775 \times 1.0$

$\fallingdotseq$ 36.446 tf

(3) Strength of gate leaf

(a) Design Pressure

$W = 49.064$ tf

(b) Bending Moment and Shearing force

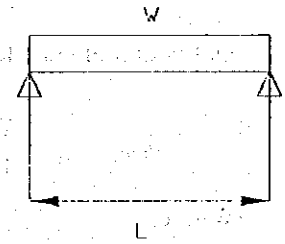

$M = 1/8 \cdot W \cdot L$

$Q = ½ \cdot W \cdot L$

Where, L : Span = 0.860 m

$M = 1/8 \times 49.064 \times 0.860 \fallingdotseq 5.275$ tf·m

$Q = ½ \times 49.064 \times 0.860 \fallingdotseq 21.098$ tf·m

(c) Section Properties

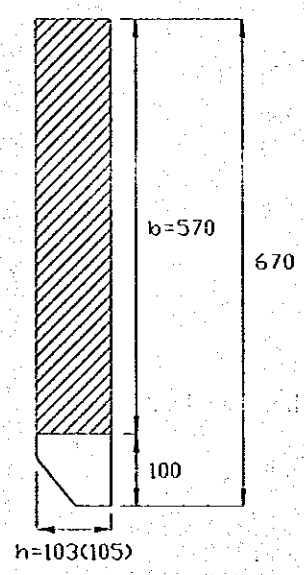

$$I = \frac{bh^3}{12} = \frac{57.0 \times 10.3^3}{12} = 5190 \text{ cm}^4$$

$$Z = \frac{bh^2}{6} = \frac{57.0 \times 10.3^2}{6} = 1007 \text{ cm}^3$$

$A = bh = 57.0 \times 10.3 = 587.1$ cm^2

$A_W = bh' = 57.0 \times 7.5 = 427.5$ cm

(h':Gate leaf end = 7.5 cm)

(d) Stress

Bending Stress

$$\sigma = \frac{M}{Z} = \frac{5.275 \times 10^3}{1007} = 524 \text{ (kgf/cm}^2\text{)}$$

Shearing Stress

$$\tau = \frac{Q}{A_W} = \frac{21.098 \times 10^3}{427.5} = 50 \text{ (kgf/cm}^2\text{)}$$

Allowable stress

Bending Stress $\sigma_a = 0.5 \times \sigma y \times 0.9 = 0.5 \times 2400 \times 0.92$
$= 1104$ kgf/cm^2
(steel quality SM400, t ≧ 40 mm)

Shearing Stress $\tau_a = \frac{\sigma_a}{\sqrt{3}} = \frac{1104}{\sqrt{3}} \fallingdotseq 637$ kgf/cm^2

(c) Deflection of Gate Leaf

$$\delta_{max} = \frac{5 \cdot W \cdot L^3}{384 \cdot E \cdot I}$$

Where,

δ_{max} : Maximum Deflection of Gate Leaf Center (cm)

E : Young's modulus = 2.1×10^6 (kgf/cm^2)

I : Inatia of Gate Leaf = 5109 (cm^4)

$$\delta_{max} = \frac{5 \times 49.064 \times 10^3 \times 86^3}{384 \times 2.1 \times 10^6 \times 5109}$$

$$= 0.038 \text{ (cm)}$$

$$\frac{\delta_{max}}{L} = \frac{0.038}{86} = \frac{1}{2264} < \frac{1}{2000}$$

(4) Strength of bonnet

Bonnet shall be calculated as simple supporting horizontal sub flame.

(a) Bearing pressure

$W = p \times a \times B$

Where,

p : Interval pressure
= S.W.L 151.800 + Water Hammer 28.6 m – value center EL. 85.900
= 94.5 m
≒ 9.5 kgf/cm^2

a : Pitch of horizontal sub flame = 26.5 cm

$W = 9.5 \times 26.5 \times 90$
$= 22658$ kgf

(b) Bending Moment, Shearing Force

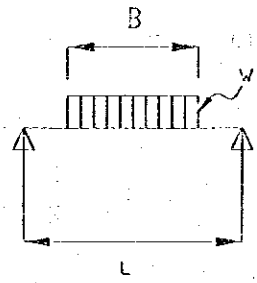

$M = 1/8 \cdot W \cdot (2L - B)$

Where,

L : width of connection

= 115.0 cm

B : width of pressure load = 90.0 cm

$M = 1/8 \times 22658 \times (2 \times 115.0 - 90.0)$

= 396515 kgf·cm

Shearing force

$Q = ½ \cdot W \cdot B$

$= ½ \times 22658$

= 11329 kgf

(c) Section Properties

(i) Clear width of skin plate

cm

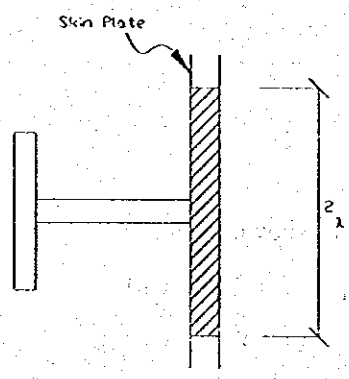

ℓ/L

Where, ℓ : $½ \cdot a \cdot = ½ \times 26.5 = 13.25$

$\ell/L = 13.25/115.0 = 0.115$

$0.05 < \ell/L < 0.3$

$\lambda = \{1.1 - 2 \cdot (\ell/L)\} \cdot \ell$

$= \{1.1 - 2 \times (13.25/115.0)\} \times 13.25$

= 11.522 cm

Thus,

2λ = 23.04 cm ≒ 230 mm

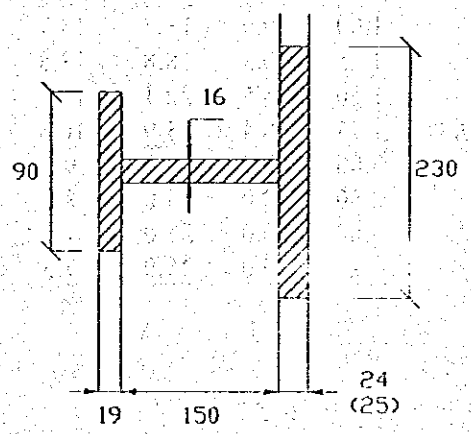

I	=	4710	cm^4
Z_t	=	366	cm^3
Z_c	=	734	cm^3
A	=	96.3	cm^2
A_W	=	24	cm^2

(d) Stress

Bending Stress

$$\sigma_t = \frac{M}{Z_t} = \frac{396515}{366} = 1083 \text{ kgf/cm}^2$$

$$\sigma_C = \frac{M}{Z_C} = \frac{396515}{734} = 540 \text{ kgf/cm}^2$$

Shearing Stress

$$\tau = \frac{Q}{A_W} = \frac{11329}{24} = 472 \text{ kgf/cm}^2$$

Allowable stress

Bending Stress $\sigma_a = 0.5 \times \sigma y = 0.5 \times 2400$

$= 1200 \text{ kgf/cm}^2$ (steel quality SM400)

Shearing Stress $\tau_a = \frac{\sigma_a}{\sqrt{3}} = \frac{1200}{\sqrt{3}}$

$\fallingdotseq 693 \text{ kgf/cm}^2$ (steel quality SM400)

(e) Skin Plate

$$\sigma = \frac{1}{100} \cdot K \cdot a^2 \cdot \frac{P}{t^2}$$

Where,

K : Non-dimensional factor as shown in table

a·b : Support length of plate pane. $a \leqq b$ (cm)

P : Internal pressure = 7.1 (kgf/cm^2)

t : Thickness of skin plate = 2.4 (cm)

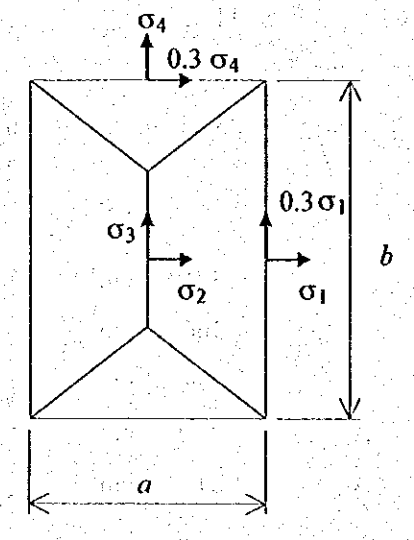

b/a	σ_1	σ_2	σ_3	σ_4
1.00	30.9	13.7	13.7	30.9
1.25	40.3	18.8	13.5	33.9
1.50	45.5	22.1	12.2	34.3
1.75	48.4	23.9	10.8	34.3
2.00	49.9	24.7	9.5	34.3
2.50	50.0	25.0	8.0	34.3
3.00	50.0	25.0	7.5	34.3
∞	50.0	25.0	7.5	34.3

$b/a = 50.0/26.5 \fallingdotseq 2.0$

$K_1 = 49.9$

$K_2 = 25.0$

$K_3 = 9.5$

$K_4 = 34.3$

Result of skin plate stress

kgf/cm²

σ_1	$0.3\ \sigma_1$	σ_2	σ_3	σ_4	$0.3\ \sigma_4$
432	130	216	28	363	109

Allowable stress $\sigma_a = 0.5 \times \sigma y = 0.5 \times 2400$ kgf/cm² (steel quality SM400)
(Steel quality SM400)

(f) Sum of stress

Horizontal stress

$\sigma_H = \sigma_C + \sigma_4 = 540 + 363 = 903$ kgf/cm²

Vertical stress

$\sigma_V = \sigma_1 = 432$ kgf/cm²

Combine stress

$$\sigma_g = \sqrt{\sigma_H{}^2 + \sigma_V{}^2 - \sigma_H \cdot \sigma_V}$$

$$= \sqrt{9032^2 + 432^2 - 903 \times 432}$$

$$= 782 \text{ kgf/cm}^3$$

Allowable stress

$\sigma_{Ha} = \sigma_{Va} = 1200$ kgf/cm²

$\sigma_{ga} = 1.1 \times 0.5 \times 2400 = 1320$ kgf/cm²

(5) Bearing plate

(a) Bearing Stress

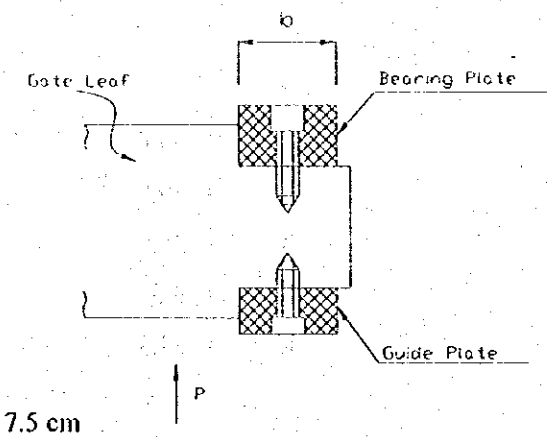

$$\sigma_{bs} = \frac{P}{2 \cdot H \cdot b \cdot \eta}$$

Where,

H : Seal Height = 67.0 cm

b : Width of Bearing plate = 7.5 cm

η : Efficiency of bearing plate by bolt hole = 0.7

At full closed

$$\sigma_{bs} = \frac{49.064 \times 10^3}{2 \times 67 \times 7.5 \times 0.7} \fallingdotseq 70.0 \text{ kgf/cm}^2$$

Allowable stress σ_{ba} = 180 kgf/cm^2 (steel quality LBC 3)

At operating

$$\sigma_{bs} = \frac{36.446 \times 10^3}{2 \times 67 \times 7.5 \times 0.7} \fallingdotseq 51.8 \text{ kgf/cm}^2$$

Allowable stress σ_{ba} = 60 kgf/cm^2 (steel quality LBC 3)

(6) Calculation for hoist

(a) Hoisting load

Gate Leaf Self Weight

W_G = 0.650 tf

Friction of Bearing Plate

$F_b = \mu \cdot P_o$

Where,

μ : Friction coefficient = 0.6

P_o : Pressure load in operation = 36.446 tf

$$Fb = 0.6 \times 36.446$$

$$\fallingdotseq 21.868 \text{ tf}$$

Dounpour

$Fd = \alpha \cdot A \cdot h$

Where,

α : Coefficient of dounpour = 0.3

A : Area of gate leaf bottom face

$= 0.095 \times 0.65$

$= 0.06175\ m^2$

h : Operation head

= H.W.L 155.3 + Wave Height 0.8 – valve center EL. 85.900

$= 70.2\ tf/m^2$

$Fd = 0.3 \times 0.06175 \times 70.2$

$\fallingdotseq 1.301\ tf$

Spindle weight

$Ws = 0.1\ tf$

Buoyancy of Gate Lead and spindle

$$Fg = \frac{1}{r} \cdot (Wg + Ws)$$

Where, r : Specific gravity of steel = 7.85 (tf/m^3)

$$Fg = \frac{1}{7.85} \cdot (0.650 + 0.1)$$

$\fallingdotseq 0.096\ tf$

(b) Sum of Load

(tf)

Item	Raising	Lowering	Note
W_G	↓ 0.650	↓ 0.65	Pressure balance in raising operation
W_b	-----	↑ 21.868	
W_d	-----	↑ 1.301	
W_s	↓ 0.100	↓ 0.100	
W_q	↑ 0.096	↑ 0.096	
Sum	↓ 0.654	↑ 22.515	

Thus, the lowering hoisting load 23.0 tf is employed.

(c) Spindle Torque

$$Ts = \frac{W}{N \cdot f}$$

Where,

Ts : Spindle Torque (kgf·cm)

W : Lowering hoisting load = 23000 (kgf)

N : Number of spindle = 1

f : Coefficient of thrust

$$f = \frac{2 \cdot (\theta \cdot \pi \cdot d - \mu \cdot \ell)}{d \cdot (\theta \cdot \ell + \mu \cdot \pi \cdot d)}$$

θ : cos 15° (Metric screw thread)

d : Clear diameter of spindle = 9.5 cm

μ : Friction coefficient of screw = 0.2

ℓ : Lead of screw = 1.2 cm

$$f = \frac{2 \times (\cos 15 \times \pi \times 9.5 - 0.2 \times 1.2)}{9.5 \times (\cos 15 \times 1.2 + 0.2 \times \pi \times 9.5)}$$

$$= 0.844$$

$$Ts = \frac{23000}{1 \times 0.844} = 27251 \text{ kgf·cm}$$

(d) Requirement Revolution number of spindle

$$Ns' = \frac{V}{\ell}$$

Where, V : Operating Speed = 0.100 $^{m}/_{min}$

$$Ns' = \frac{0.100}{0.012} = 8.33 \text{ r.p.m}$$

(e) Operating Speed

$$V = Nm \cdot i \cdot \ell$$

Where,

Nm : Revolution number of motor = 1350. r.p.m

i : ratio of reducer = 1/156.47

$$V = 1350 \times 1/156.47 \times 0.012$$

$$= 0.103 \ ^{m}/_{min}$$

(f) Motor Output

$$P_M = \frac{N \cdot T_S \cdot N_S}{97400 \cdot \eta_V}$$

$$= \frac{1 \times 27251 \times 8.33}{97400 \times 0.55}$$

$$= 4.2338 \text{ Kw}$$

Therefore, 5.5 Kw induction motor should be adopted.

2.7.9 Guard Gate (Ø 0.250 m)

(1) Design Data

Type of Gate	:	Height Pressure Slide Gate
Water level	:	Design Water Level
		S.W.L 151.800 + Water Hammer 28.6 m
		Operating water level
Rasing		pressure balance
Lowering		H.W.L 155.300 + Wave Height 0.8 m
Elevation of center	:	EL. 85.450
Nominal Diameter	:	Ø 0.250 m
Type of Hoist	:	Electrically driven screw spindle type
Operating speed	:	0.1 $^{m}/_{min}$ ± 10%
Power Source	:	380 V, 50 Hz, 3 Ø 4 W
Corrosion Allowance	:	1.0 mm (one face)
Allowable Stress for steel	:	Tension, Compression 0,5 σy as a basis shearing 0,5 σy/$\sqrt{3}$
Allowable Deflection	:	1/2000

(2) Design hydraulic pressure load

(a) Design Pressure

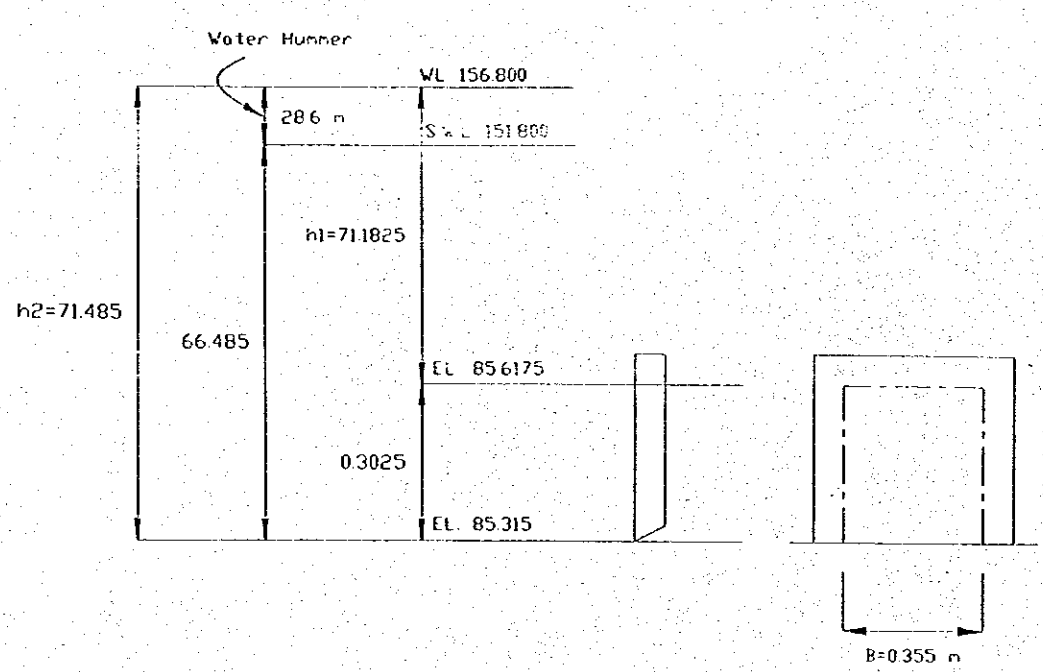

$$P = \frac{1}{2} \cdot (h_2^2 - h_1^2) \cdot B \cdot W_o$$

Where,

h_1 = S.W.L 151.800 + Water Hammer 28.6 – EL. 85.6175

= 94.7825 m

h_2 = S.W.L 151.800 + Water Hammer 28.6 – EL. 85.315

= 95.085 m

B : Seal span = 0.355 m

W : Unit of water weight = 1.0 tf/m^3

$$P = \frac{1}{2} \cdot (95.085^2 - 94.7825^2) \times 0.355 \times 1.0$$

$$\fallingdotseq 10.195 \text{ tf}$$

(b) Operation Pressure

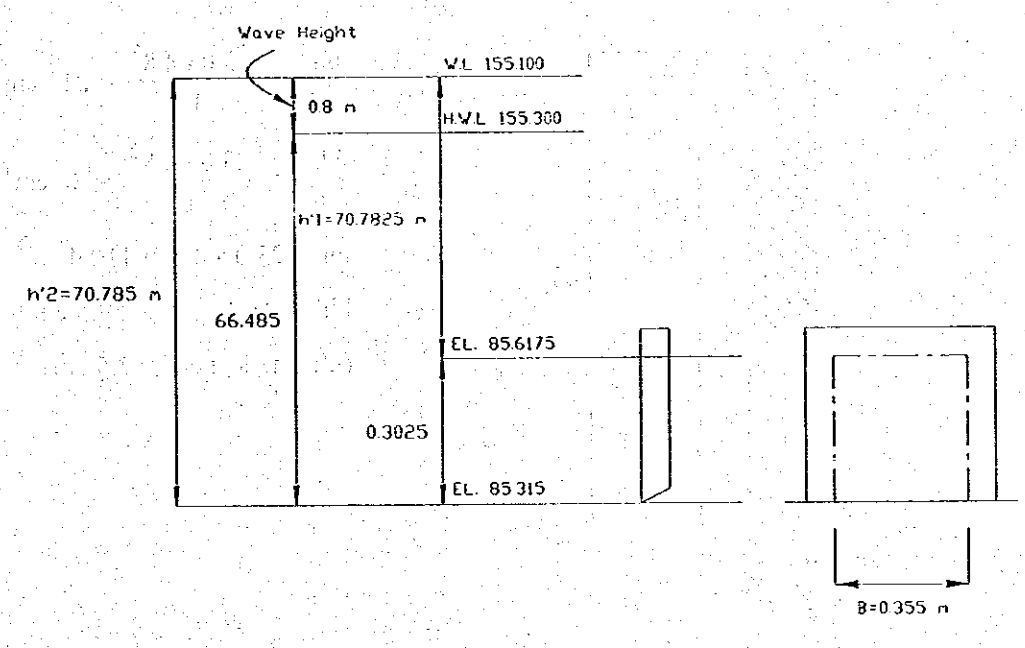

$$P_o = \frac{1}{2} \cdot (h'^2_2 - h'^2_1) \cdot B \cdot W_o$$

Where,

h'_1 : H.W.L 155.300 + 0.8 m – EL. 85.6175 = 70.4825 m

h'_1 : H.W.L 155.300 + 0.8 m – EL. 85.315 = 70.785 m

$$P_o = \frac{1}{2} \times (70.785^2 \times 70.4825^2) \times 0.355 \times 1.0$$

$$\fallingdotseq 7.585 \text{ tf}$$

(3) Strength of gate leaf

(a) Design Pressure

W = 10.195 tf

(b) Bending Moment and Shearing force

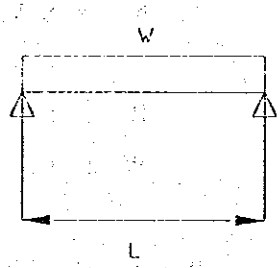

$M = 1/8 \cdot W \cdot L$

$Q = ½ \cdot W \cdot L$

Where, L : Span = 0.380 m

$M = 1/8 \times 10.195 \times 0.380 \fallingdotseq 0.484$ tf·m

$Q = ½ \times 10.195 \times 0.380 \fallingdotseq 1.937$ tf·m

(c) Section Properties

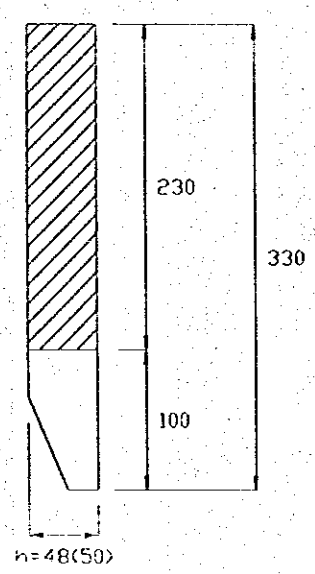

$$I = \frac{bh^3}{12} = \frac{23.0 \times 4.8^3}{12} = 212 \text{ cm}^4$$

$$Z = \frac{bh^2}{6} = \frac{23.0 \times 4.8^2}{6} = 88 \text{ cm}^3$$

$A = bh = 23.0 \times 4.8 = 110.4 \text{ cm}^2$

$A_W = bh' = 23.0 \times 2.5 = 59.5$ cm

(h':Gate leaf end = 2.5 cm)

(d) Stress

Bending Stress

$$\sigma = \frac{M}{Z} = \frac{0.484 \times 10^3}{88} = 550 \text{ (kgf/cm}^2\text{)}$$

Shearing Stress

$$\tau = \frac{Q}{A_W} = \frac{1.937 \times 10^3}{57.5} = 34 \text{ (kgf/cm}^2\text{)}$$

Allowable stress

Bending Stress $\sigma_a = 0.5 \times \sigma y \times 0.9 = 0.5 \times 2400 \times 0.92$
$= 1104$ kgf/cm^2
(Steel quality SM400, t ≧ 40 mm)

Shearing Stress $\tau_a = \dfrac{\sigma_a}{\sqrt{3}} = \dfrac{1104}{\sqrt{3}} \fallingdotseq 637$ kgf/cm^2

(e) Deflection of Gate Leaf

$$\delta_{max} = \frac{5 \cdot W \cdot L^3}{384 \cdot E \cdot I}$$

Where,

δ_{max} : Maximum Deflection of Gate Leaf Center (cm)

E : Young's modulus = 2.1×10^6 (kgf/cm^2)

I : Inatia of Gate Leaf = 212 (cm^4)

$$\delta_{max} = \frac{5 \times 10.195 \times 10^3 \times 38^3}{384 \times 2.1 \times 10^6 \times 212}$$

$$= 0.016 \text{ (cm)}$$

$$\frac{\delta_{max}}{L} = \frac{0.016}{38} = \frac{1}{2323} < \frac{1}{2000}$$

(4) Strength of bonnet

Bonnet shall be calculated as simple supporting horizontal sub flame.

(a) Bearing Pressure

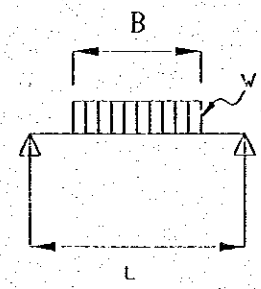

$W = p \times a \times B$

Where,

p : Interval pressure
= S.W.L 151.800 + Water Hummer 28.6 – valve center EL. 85.450
= 94.95 m
≒ 9.5 kgf/cm^2

a : pitch of horizontal sub flame = 19.0 cm

b : width of pressure load = 41.0 cm

$W = 9.5 \times 19.0 \times 41.0$
$= 7401$ kgf

(b) Bending Moment, Shearing Force

$M = 1/8 \cdot W \cdot (2L - B)$

Where,

L : width of connection

=55.0 cm

B : width of pressure load = 41.0 cm

$M = 1/8 \times 7401 \times (2 \times 55.0 - 41.0)$

$= 63834$ kgf·cm

Shearing force

$Q = ½ \cdot W$

$= ½ \times 7401$

$= 3701$ kgf

(c) Section Properties

(i) Clear width of skin plate

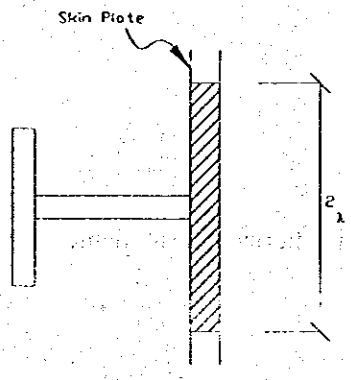

ℓ/L

Where, ℓ : $½ \cdot a \cdot = ½ \times 19.0 = 9.5$ cm

$\ell/L = 9.5/55.0 = 0.17$

$0.05 < \ell/L < 0.3$

$\lambda = \{1.1 - 2 \cdot (\ell/L)\} \cdot \ell$

$= \{1.1 - 2 \times (9.5/55.0)\} \times 9.5$

$= 7.2$ cm

Thus,

$2\lambda = 14.3$ cm ≒ 140 mm

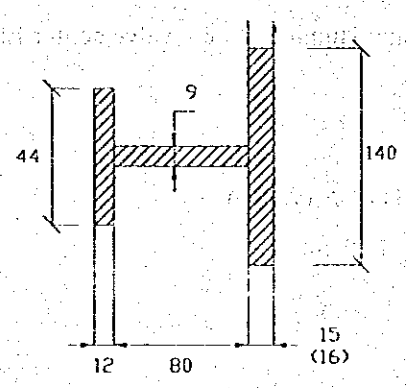

$I = 458$ cm^4

$Z_t = 61$ cm^3

$Z_c = 141$ cm^3

$A = 33.48$ cm^2

$A_w = 7.2$ cm^2

(d) Stress

Bending Stress

$$\sigma_t = \frac{M}{Z_t} = \frac{63834}{61} = 1047 \text{ kgf/cm}^2$$

$$\sigma_C = \frac{M}{Z_C} = \frac{63834}{414} = 453 \text{ kgf/cm}^2$$

Shearing Stress

$$\tau = \frac{Q}{A_W} = \frac{3701}{7.2} = 514 \text{ (kgf/cm}^2\text{)}$$

Allowable stress

Bending Stress $\sigma_a = 0.5 \times \sigma y = 0.5 \times 2400 = 1200$ kgf/cm^2

(steel quality SM400)

Shearing Stress $\tau_a = \frac{\sigma_a}{\sqrt{3}} = \frac{1200}{\sqrt{3}} \fallingdotseq 693$ kgf/cm^2

(steel quality SM400)

(e) Skin Plate

$$\sigma = \frac{1}{100} \cdot K \cdot a^2 \cdot \frac{P}{t^2}$$

Where,

K : Non-dimensional factor as shown in table

a·b : Support length of plate pane. $a \leqq b$ (cm)

P : Internal pressure = 7.2 (kgf/cm^2)

t : Thickness of skin plate = 1.5 (cm)

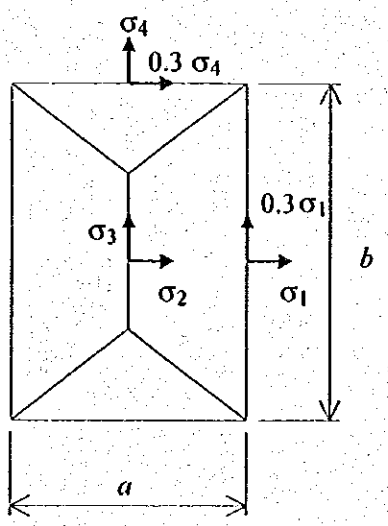

b/a	σ_1	σ_2	σ_3	σ_4
1.00	30.9	13.7	13.7	30.9
1.25	40.3	18.8	13.5	33.9
1.50	45.5	22.1	12.2	34.3
1.75	48.4	23.9	10.8	34.3
2.00	49.9	24.7	9.5	34.3
2.50	50.0	25.0	8.0	34.3
3.00	50.0	25.0	7.5	34.3
∞	50.0	25.0	7.5	34.3

$b/a = 55.0/19.0 \fallingdotseq 3.0$

$K_1 = 50.0$

$K_2 = 25.0$

$K_3 = 7.5$

$K_4 = 34.3$

Result of skin plate stress

kgf/cm^2

σ_1	$0.3\ \sigma_1$	σ_2	σ_3	σ_4	$0.3\ \sigma_4$
578	173	289	87	396	119

Allowable stress $\sigma_a = 0.5 \times \sigma y = 0.5 \times 2400$ kgf/cm^2 (steel quality SM400)
(Steel quality SM400)

(f) Sum of stress

Horizontal stress

$\sigma_H = \sigma_C + \sigma_4 = 453 + 396 = 849$ kgf/cm^2

Vertical stress

$\sigma_V = \sigma_1 = 578$ kgf/cm^2

Combine stress

$$\sigma_g = \sqrt{\sigma_H{}^2 + \sigma_V{}^2 - \sigma_H \cdot \sigma_V}$$

$$= \sqrt{849^2 + 578^2 - 849 \times 578}$$

$$= 751 \text{ kgf/cm}^3$$

Allowable stress

$\sigma_{Ha} = \sigma_{Va} = 1200$ kgf/cm^2

$\sigma_{ga} = 1.1 \times 0.5 \times 2400 = 1320$ kgf/cm^2

(5) Bearing plate

(a) Bearing Stress

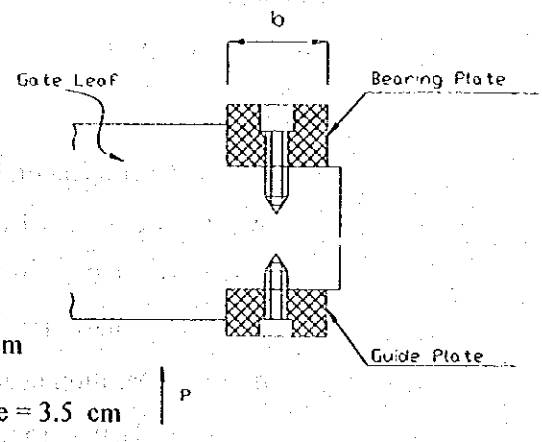

$$\sigma_{bs} = \frac{P}{2 \cdot H \cdot b \cdot \eta}$$

Where,

H : Seal Height = 30.25 cm

b : Width of Bearing plate = 3.5 cm

η : Efficiency of bearing plate by bolt hole = 0.7

At full closed

$$\sigma_{bs} = \frac{10.195 \times 10^3}{2 \times 30.25 \times 3.5 \times 0.7} \fallingdotseq 69 \text{ kgf/cm}^2$$

Allowable stress σ_{ba} = 180 kgf/cm² (steel quality LBC 3)

At operating

$$\sigma_{bs} = \frac{7.585 \times 10^3}{2 \times 30.25 \times 3.5 \times 0.7} \fallingdotseq 51 \text{ kgf/cm}^2$$

Allowable stress σ_{ba} = 60 kgf/cm² (steel quality LBC 3)

(6) calculation for hoist

(a) Hoisting load

Gate Leaf Self Weight

W_G = 0.100 tf

Friction of Bearing Plate

$F_b = \mu \cdot P_o$

Where,

μ : Friction coefficient = 0.6

P_o : Pressure load in operation = 36.446 tf

Fb = 0.6 × 7.585

≒ 4.551 tf

Dounpour

$Fd = \alpha \cdot A \cdot h$

Where,

α : Coefficient of dounpour = 0.3

A : Area of gate leaf bottom face

$= 0.045 \times 0.25$

$= 0.011\ m^2$

h : Operation head

= H.W.L 155.3 + Wave Height 0.8 – valve center EL. 85.450

$= 70.65\ tf/m^2$

$Fd = 0.3 \times 0.011 \times 70.65$

$\fallingdotseq 0.233\ tf$

Spindle weight

$Ws = 0.010\ tf$

Buoyancy of Gate Lead and spindle

$$Fg = \frac{1}{r} \cdot (Wg + Ws)$$

Where, r : Specific gravity of steel = 7.85 (tf/m^3)

$$Fg = \frac{1}{7.85} \cdot (0.100 + 0.010)$$

$\fallingdotseq 0.014\ tf$

(b) Sum of Load

(tf)

Item	Raising	Lowering	Note
W_G	↓ 0.100	↓ 0.100	Pressure balance in raising operation
W_b	-----	↑ 4.551	
W_d	-----	↑ 0.233	
W_s	↓ 0.010	↓ 0.010	
W_q	↑ 0.014	↑ 0.014	
Sum	↓ 0.096	↑ 4.688	

Thus, the lowering hoisting load 5.0 tf is employed.

(c) Spindle Torque

$$Ts = \frac{W}{N \cdot f}$$

Where,

Ts : Spindle Torque (kgf·cm)

W : Lowering hoisting load = 5000 (kgf)

N : Number of spindle = 1

f : Coefficient of thrust

$$f = \frac{2 \cdot (\theta \cdot \pi \cdot d - \mu \cdot \ell)}{d \cdot (\theta \cdot \ell + \mu \cdot \pi \cdot d)}$$

θ : cos 15° (Metric screw thread)

d : Clear diameter of spindle = 4.4 cm

μ : Friction coefficient of screw = 0.2

ℓ : Lead of screw = 0.8 cm

$$f = \frac{2 \times (\cos 15 \times \pi \times 4.4 - 0.2 \times 0.8)}{4.4 \times (\cos 15 \times 0.8 + 0.2 \times \pi \times 4.4)}$$

$$= 1.695$$

$$Ts = \frac{5000}{1 \times 1.695} = 2950 \text{ kgf·cm}$$

(d) Requirement Revolution number of spindle

$$Ns' = \frac{V}{\ell}$$

Where, V : Operating Speed = 0.100 $^{m}/_{min}$

$$Ns' = \frac{0.100}{0.008} = 12.5 \text{ r.p.m}$$

(e) Operating Speed

$$V = Nm \cdot i \cdot \ell$$

Where,

Nm : Revolution number of motor = 1350. r.p.m

i : ratio of reducer = 1/105

$$V = 1350 \times 1/105 \times 0.008$$

$$= 0.103 \ ^{m}/_{min}$$

(f) Motor Output

$$P_M = \frac{N \cdot T_S \cdot N_S}{97400 \cdot \eta_V}$$

$$= \frac{1 \times 2950 \times 12.5}{97400 \times 3}$$

$$= 1.262 \text{ Kw}$$

Therefore, 1.5 Kw induction motor should be adopted.

2.8 Trash Boom

The trash boom is provided across the reservoir. The purposes of the trash boom are:

- To protect the spillway and intake structures from floating logs and trashes carried from upstream of the reservoir during the initial filling of the reservoir or floods and
- To maintain the environmental condition at the shoreline of dam slope.

The total length of trash boom is 405 m and 2 supporting anchors are provided to mitigate the tensile stress of boom.

A boat gate is arranged at the left side of trash boom for the access to the dam body.

2.8.1 Components and Materials

The trash boom is composed of main rope, supporting rope, float, net, weight and anchor blocks. The materials of the components are selected as bellow:

– Main Rope	: double lines galvanized wire rope
– Support Rope	: single line galvanized wire rope
– Float	: polyethylene float filled up with expanded polystyrene
– Net	: tied polyethylene fiber net with 1.2 m high
– Weight	: lead rod
– Anchor block	: concrete with steel hook
– Boat Gate	: steel made, manual operation
	: pass width 4m
	: pass depth 1.5m

2.8.2 Design Condition

The design conditions of the trash boom are:

– Water Level	: Maximum Water Level	EL. 155.300m
	: Surcharge Water Level	EL. 151.800m
	: Normal Water Level	EL. 148.900m

: Low Water Level EL. 136.000m

- Wind Velocity : 20 m/s
- Water Velocity : 0.3 m/s
- Thickness of trash : water surface 20 cm
  : underwater 50 cm
- Unit Weight of Concrete : $\gamma c = 2.35$ t/m^3
- Coefficient of Friction : $\mu = 0.6$
- Safety factor : Main and Supporting rope SF>3.0
  : Anchor Block SF>1.5
- Allowable bending stress of steel material $\sigma = 1{,}400$ kg/cm^2
- Allowable tensile stress of steel material $\sigma = 1{,}400$ kg/cm^2
- Allowable shearing stress of steel material $\tau = 800$ kg/cm^2

2.8.3 Design Calculation

(1) Design Load

Drag of Flowing Water P

$P = 1/2\ \rho_w V_w^2 C_w A_1$ (kgf)

Where,

ρ_w : Density of Water (=102 kgf. sec^2/m^4)
V_w : Velocity of Flow (m/sec)
C_w : Drag Coefficient (= 1.0)
A_1 : Area under Water (m^2)

Wave Pressure Load Pw

$P_w = 1/2\ \rho_w U^2 C_w A_1$ (kgf)

Where,

U : Particle Velocity (m/s) = $\pi H/T\ e^{\pi H/L}$
H : Wave Height (m)
$= 0.30\ [1-\{1+0.004\ (g\ F/U_{10}^2)^{1/2}\}^{-2}]\ U_{10}^2/g$
L : Wave Length (m) = $g\ T^2/2\pi$
T : Wave Period (sec)
$= 1.37\ [1-\{1+0.008\ (gF/U_{10}^2)^{1/3}\}^{-5}]\ 2\pi\ U_{10}/g$

Where,

g : Acceleration of Gravity (=9.8 m/sec^2)

U_{10} : Wind Speed (m/sec)

F : Fetch (m) = 1,900 m (upstream)

= 250 m (downstream)

Wind Load Pa

$P_a = 1/2\ \rho_a V_a^2 C_a G A_2$ (kgf)

Where,

ρ_a : Density of Air (=0.125 kg.sec^2/m^4)

V_a : Wind Speed (m/sec)

C_a : Drag Coefficient (= 0.8)

G : Gust Response Coefficient (= 1.0)

A_2 : Area above Water (m^2)

(2) Calculation of Design Load

Project Area per 1 m

Trash

A_1 : 0.5×1.0=0.5 m^2

A_2 : 0.2×0.1=0.2 m^2

Net

A_1 : 0.161×(1.5+0.15-0.5) = 0.185 m^2

A_2 : 0.161×(0.35-0.2)×1.5/2.5 = 0.014 m^2

Projected Area of Net per 1 m:

$A = \alpha \times l$ (m^2)

$\alpha = d\ (L-d)/S$

Where,

D : Diameter of Net String = 0.42 cm

L : 2×l = 10.0 cm

l : Size of Net = 5.0 cm

S : Area of Net = 25.0 cm^2

α = 0.42×(10.0-0.42)/25.0=0.161

A = 0.161×1 = 0.161 m^2

Weight A_1 : 0.1×1.0 / 2.5 = 0.040 m^2

Float A_2 : (0.35-0.2)×1.0/2.5 = 0.06 m^2

Main Rope A_2 : 0.020×1.0 = 0.020 m^2

Design Load from Upstream (per m)

Item	A_1 (m^2)	A_2 (m^2)	P (kgf)	P_w (kgf)	P_a (kgf)
Trash	0.500	0.200	2.295	31.024	4.000
Net	0.185	0.014	0.849	11.479	0.280
Weight	0.040	-	0.184	2.482	-
Float	-	0.060	-	-	1.200
Rope	-	0.020	-	-	0.400
Total	0.725	0.294	[illegible]	[illegible]	[illegible]

Total Design Load from Downstream = 54.193 kg/m

Design Load from Downstream (per m)

Item	A_1 (m^2)	A_2 (m^2)	P (kgf)	P_w (kgf)	P_a (kgf)
Trash	0.000	0.000	-	0.000	0.000
Net	0.261	0.034	-	9.348	0.680
Weight	0.040	0.140	-	1.433	2.800
Float	0.060	0.140	-	2.149	2.800
Rope	0.020	0.020	-	0.716	0.400
Total	0.381	0.334	[illegible]	[illegible]	[illegible]

Total Design Load from Downstream = 17.526 kgf/m

(3) Design of Ropes

Formula

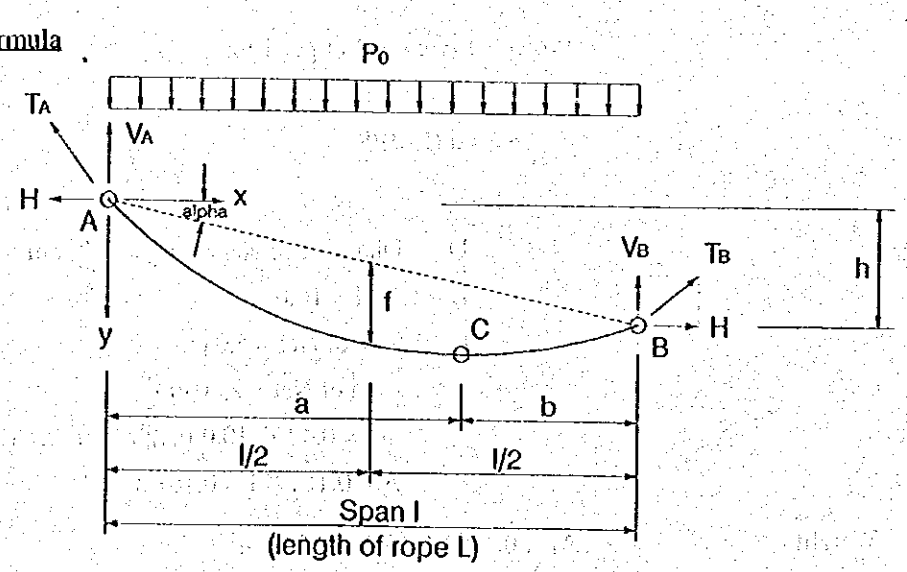

Horizontal Component of Force $H = P_0.l^2/8.f$

Vertical Component of Force $V_A = 1/2\ P_0 . l\ (1+h/4f)$

$V_B = 1/2\ P_0 . l\ (1-h/4f)$

Tensile Force for Rope $T_A = \sqrt{V_A^{\ 2} + H^2}$

$T_B = \sqrt{V_B^{\ 2} + H^2}$

Length of Rope L = LA + LB

$$LA = a/2\ \{ \sqrt{1+(P_0 a/H)^2} + H/P_0 a \quad \ln\left(P_0 a/H + \sqrt{1+(P_0 a/H)^2} \right) \}$$

$$LB = b/2\ \{ \sqrt{1+(P_0 b/H)^2} + H/P_0 b \quad \ln\left(P_0 a/H + \sqrt{1+(P_0 b/H)^2} \right) \}$$

$a = l/2 + h\ l/8f$

$b = l/2 + h\ l/8f$

<u>Tensile Force for Ropes</u>

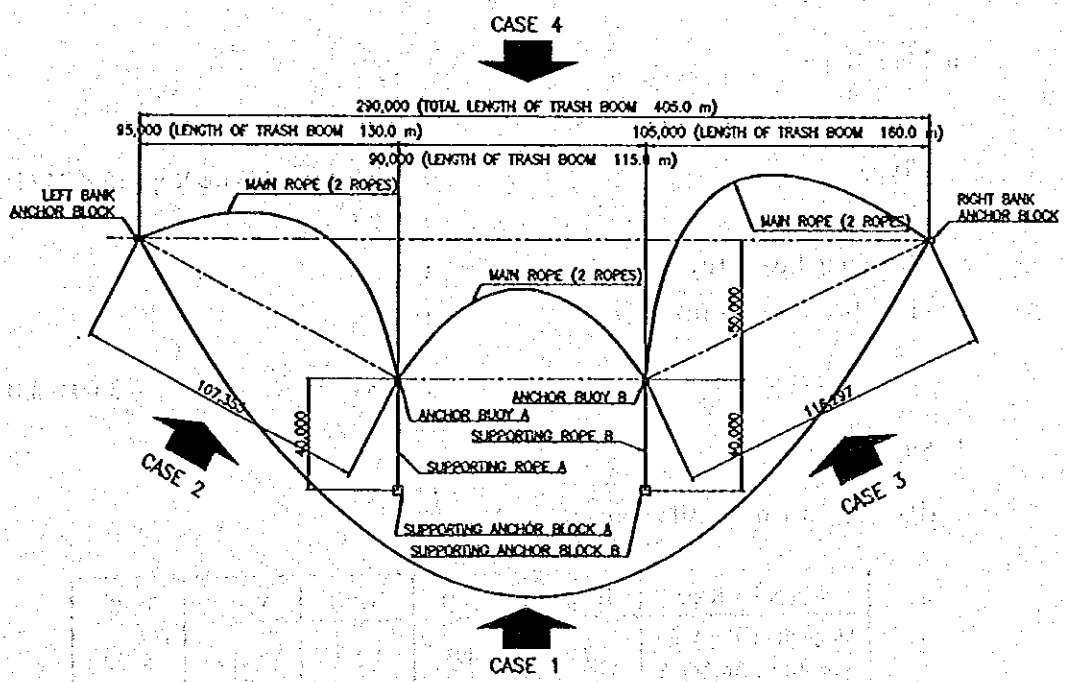

Case 1

Location	Po (tf/m)	l (m)	L (m)	H (m)	F (m)	H (tf)	V_a (tf)	V_b (tf)	T_a (tf)	T_b (tf)
Left Bank Anchor to Supporting Anchor A	0.054193	95	130	-50	35.025	1.746	1.655	3.493	2.406	3.905
Supporting Anchor A to Supporting Anchor B	0.054193	90	115	0	32.267	1.701	2.439	2.439	2.973	2.973
Supporting Anchor B to Right Bank Anchor	0.054193	105	160	50	52.080	1.434	3.528	2.162	3.808	2.595

Case 2

Location	Po (tf/m)	l (m)	L (m)	H (m)	F (m)	H (tf)	V_a (tf)	V_b (tf)	T_a (tf)	T_b (tf)
Left Bank Anchor to Supporting Anchor A	0.045347	107.36	130	0	32.797	2.380	2.909	2.909	3.759	3.759

Case 3

Location	Po (tf/m)	l (m)	L (m)	H (m)	F (m)	H (tf)	V_a (tf)	V_b (tf)	T_a (tf)	T_b (tf)
Supporting Anchor B to Right Bank Anchor	0.054193	116.30	160	0	50.001	1.832	3.151	3.151	3.645	3.645

Case 4

Location	Po (tf/m)	l (m)	L (m)	H (m)	F (m)	H (tf)	V_a (tf)	V_b (tf)	T_a (tf)	T_b (tf)
Left Bank Anchor to Right Bank Anchor	0.017526	290	405	0	128.874	1.430	2.541	2.541	2.916	2.916

Design of Ropes

a. Main Rope

- Design Tensile Force (T) : 4.0 tf
- Type : Galvanized Wire Rope (6×24,G)
- Diameter : 12.5 mm
- Breaking Load (Tn) : 7.2 tf
- Number of Ropes (n) : 2
- Safety Factor (Fs) : $Fs = \frac{Tn \times n}{T} = \frac{7.2 \times 2}{4.0} = 3.60 > 3.0$

b. Supporting Rope

(i) Balance of Tensile Force (Case 1)

Supporting Rope	H_1 (tf)	V_1 (tf)	H_2 (tf)	V_2 (tf)	Ts (tf)
Supporting Rope for Supporting Anchor A	1.746	3.493	1.701	2.439	5.932
Supporting Rope for Supporting Anchor B	1.701	2.439	1.434	3.528	5.973

(ii) Tensile Force for Supporting Rope (Case 1)

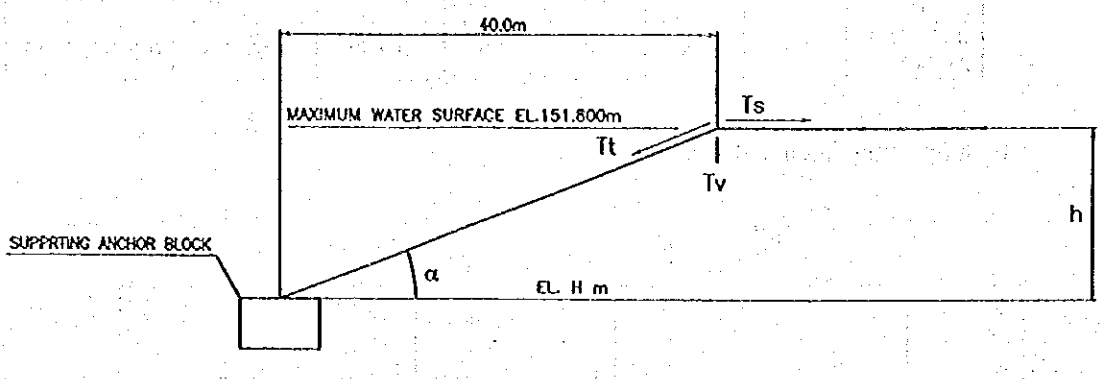

Supporting Rope	T_s (tf)	H (m)	h (m)	α (degree)	T_v (tf)	T_t (tf)
Supporting Rope for Supporting Anchor A	5.932	132.5	19.3	21.127	2.290	6.359
Supporting Rope for Supporting Anchor B	5.973	135.5	16.3	18.056	1.947	6.282

(iii) Specification of Supporting Rope (Cases 1)

Supporting Rope	Design Tensile Force (tf)	Type	Diameter (mm)	Breaking Load	Number of Ropes	Safety Factor
Supporting Rope for Supporting Anchor A	6.4	Galvanized Wire Rope (6×24, G)	22.4	23.4	1	3.66>3
Supporting Rope for Supporting Anchor B	6.3	Galvanized Wire Rope (6×24, G)	22.4	23.4	1	3.71>3

(4) Design of Anchor Structure

<u>Design of Anchor Block</u>

a. Bank Anchor Block

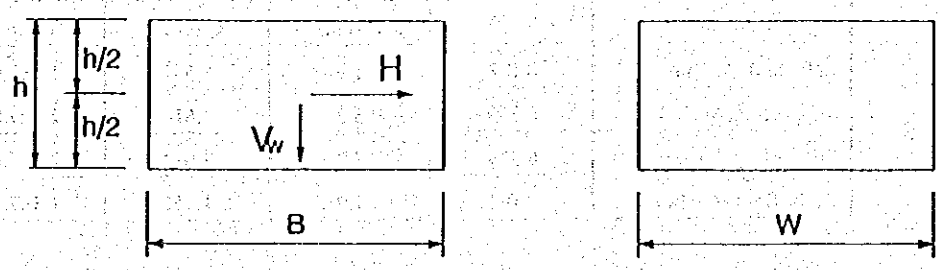

Bank Anchor	B (m)	W (m)	h (m)	H (tf)	V_w (tf)	Safety for Sliding (Fs)	Eccentric Diameter (m)
Left Bank Anchor	1.8	1.8	1.4	4.0	10.660	1.60>1.5	0.263<B/6=0.3
Right Bank Anchor	1.8	1.8	1.4	4.0	10.660	1.60>1.5	0.263<B/6=0.3

b. Supporting Anchor Block

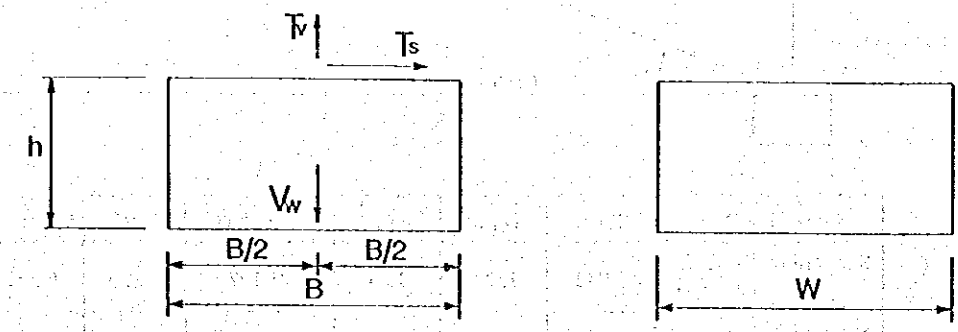

Supporting Anchor	B (m)	W (m)	h (m)	T_s (tf)	T_v (tf)	V_w (tf)	Safety for Sliding (Fs)	Eccentric Distance (m)
A	3.2	3.2	1.5	5.932	2.290	20.736	1.87>1.5	0.482<B/6=0.533
B	3.2	3.2	1.5	5.973	1.947	18.225	1.89>1.5	0.477<B/6=0.533

<u>Design of Steel Bar Anchor</u>

a. Check of Bond Stress

To = T/U

Where,

To : Bond Stress (kgf/cm^2)

T : Tensile Force (tf)

U : Total Surface Area of steel bar (cm^2)

$= 2\pi DL$ (L = 130cm)

D : Diameter of Steel Bar (cm)

Anchor	T (tf)	D (cm)	U (cm^2)	To (kgf/cm^2)
Left Bank Anchor	4.0/2	1.9	1,552	1.3<7.0
Supporting Anchor A	6.359	3.2	2,614	2.4<7.0
Supporting Anchor A	6.359	3.2	2,614	2.4<7.0
Right Bank Anchor	4.0/2	1.9	1,552	1.3<7.0

b. Check of Tensile Stress and Shearing Stress

$\sigma = T/(2 \times As)$

Where,

σ : Tensile stress (kg/cm^2)

As : Sectional Area of Steel Bar (cm^2)

$\tau = T/As$

Where,

τ : Shearing Stress (kg/cm^2)

Anchor	T (tf)	D (cm)	As (cm^2)	σ (kgf/cm^2)	τ (kgf/cm^2)
Left Bank Anchor	11.9/2	1.9	2.835	353<1400	705<800
Supporting Anchor A	15.1	3.2	8.042	395<1400	791<800
Supporting Anchor B	14.2	3.2	8.042	395<1400	791<800
Right Bank Anchor	6.7/2	1.9	2.835	353<1400	705<800

(5) Design of Boat Gate

Bending Moment

Maximum Bending Moment

$M\ max = 1/2 \times T \times (l_1 + l_2)$

$= 1/2 \times 4.0 \times (1.95 + 1.35)$

$= 6.6$ tf-m

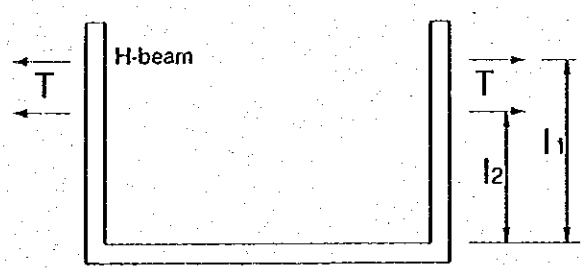

Design of Boat Gate

Main Beam H 200×200×8×12

Sectional Area A = 63.53 cm^2

Section Modulus Z = 472 cm^3

$\sigma M_{max} = M_{max}/Z = 660{,}000/472 = 1{,}398$ kgf/cm^2 < 1,400 kgf/cm^2