4.2.4 Approach Wall

4.2.4.1 Approach Wall (H=5.40m) at Downstream of Weir

1) Loading Condition

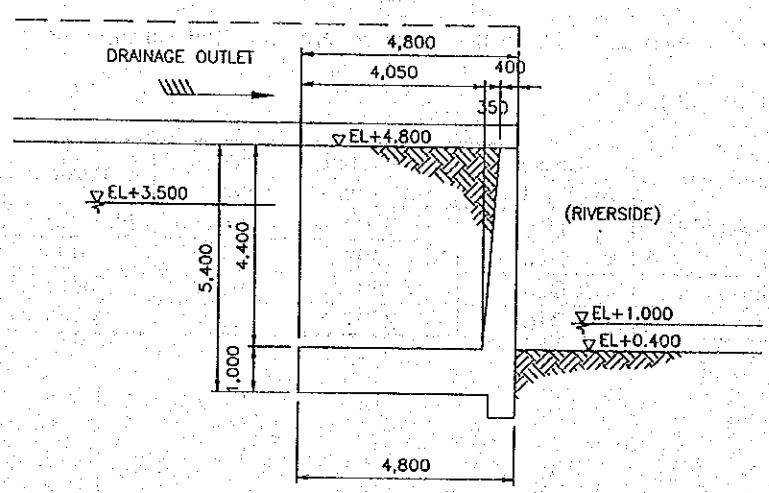

Design Condition

Item	Unit		Item	Unit	
Height of wall	m	4.400	Unit weight of concrete	tf / m^3	2.500
Height of footing	m	1.000	Unit weight of water	tf / m^3	1.000
Total height of wall	m	5.400	Unit weight of soil	tf / m^3	1.800
Crown width	m	0.400	Submerged unit weight	tf / m^3	1.000
Slope of behind side		0.080	Angle of shearing resistance		30.000
Width of bottom section Length at wall	m	0.350	Horizontal seismic intensity		0.120
Width of bottom section at footing	m	4.050	Apparently horizontal seismic intensity		0.240
Total width of wall (m)	m	4.800	Coefficient of earth pressure in Normal case		0.297
Surcharge load in Normal case	tf/m^2	2.300	Coefficient of earth pressure in Seismic case above water		0.383
Surcharge load in Seismic case	tf/m^2	2.300	Coefficient of earth pressure in seismic case below water		0.492
Top elevation of wall				EL m	4.800
Bottom elevation of slab				EL m	-0.600
Water level at land side in Normal case				EL m	3.500
Water level at riverside in Normal case				EL m	1.000
Water level at riverside in Seismic case				EL m	1.000
Water level at land side in Seismic case				EL m	3.500

Surcharge load for Drainage outlet

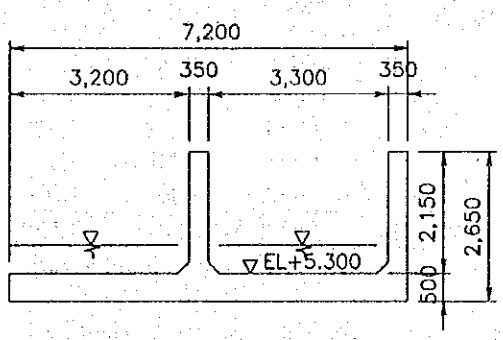

Weight of body

A1 (Slab) $= 0.50 \times 7.20 = 3.60\ m^2$

A2 (Edge wall) $= 0.35 \times 2.15 = 0.75\ m^2$

A3 (Middle wall) $= 0.35 \times 2.15 = 0.75\ m^2$

$\Sigma A = 3.60 + 0.75 + 0.75 = 5.10\ m^2$

$W1 = 5.10\ m^2 \times 2.50\ tf/m^3 = 12.75\ tf/m$

Weight of water

Estimated water depth $h = 0.50\ m$

$W2 = (3.20 + 3.30) \times 0.50 \times 1.00 tf/m^3 = 3.25\ tf/m$

$\Sigma W = 12.75 + 3.25 = 16.00\ tf/m$

$Q = 16.00\ tf/m \div 7.20\ m \fallingdotseq 2.30\ tf/m^2$

1. Weight of body

	Weight W (tf)	Vertical length X (m)	Moment MX(tf-m)	Horizontal length Y (m)	Moment MY(tf-m)	Note
1	4.400	0.200	0.880	3.200	14.080	Conc.
2	1.925	0.517	0.995	2.467	4.748	Conc.
3	1.875	0.375	0.703	0.500	0.938	Conc.
4	0.000	2.100	0.000	1.000	0.000	Conc.
5	10.125	2.775	28.097	0.500	5.063	Conc.
Total	18.325	1.674	30.675	1.355	24.828	

0.951 (for pile foundation)

1'. Weight of earth

Normal case	Weight W (tf)	Vertical length X (m)	Moment MX(tf-m)	Horizontal length Y (m)	Moment MY(tf-m)
1	0.698	0.698	0.487	4.788	3.342
2	0.382	0.668	0.255	3.067	1.172
3	9.477	2.775	26.299	4.750	45.016
4	12.555	2.775	34.840	2.550	32.015
5	0.000	3.450	0.000	1.000	0.000
Total	23.112	2.677	61.881	3.528	81.545

-0.052 (for pile foundation)

Seismic case	Weight W(tf)	Vertical length X (m)	Moment MX(tf-m)	Horizontal length Y (m)	Moment MY(tf-m)
1	0.698	0.698	0.487	4.788	3.342
2	0.382	0.668	0.255	3.067	1.172
3	9.477	2.775	26.299	4.750	45.016
4	12.555	2.775	34.840	2.550	32.015
5	0.000	3.450	0.000	1.000	0.000
Total	23.112	2.677	61.881	3.528	81.545

-0.052 (for pile foundation)

Construction case	Weight W (tf)	Vertical length X (m)	Moment MX(tf-m)	Horizontal length Y (m)	Moment MY(tf-m)
1	1.386	0.633	0.878		
2	32.076	2.775	89.011		
3	0.000	3.450	0.000		
4					
5					
Total	33.462	2.686	89.889	0.000	0.000

-0.061 (for pile foundation)

2. Surcharge load

	Weight W(tf)	Vertical length X(m)	
Normal, Construction	10.120	2.600	0.025 (for pile foundation)
Seismic	10.120	2.600	0.025 (for pile foundation)

3. Weight of water

Normal case	Weight W(tf)	Vertical length X (m)	Moment MX(tf-m)	Horizontal length Y (m)	Moment MY(tf-m)
9	0.382	0.668	0.255	3.067	1.172
10	12.555	2.775	34.840	2.550	32.015
11	0.000	3.450	0.000	1.000	0.000
Total	12.937	2.713	35.095	2.565	33.187

-0.088 (for pile foundation)

Seismic case	Weight W (tf)	Vertical length X (m)	Moment MX(tf-m)	Horizontal length Y (m)	Moment MY(tf-m)
9	0.382	0.668	0.255	3.067	1.172
10	12.555	2.775	34.840	2.550	32.015
11	0.000	3.450	0.000	1.000	0.000
Total	12.937	2.713	35.095	2.565	33.187

-0.088 (for pile foundation)

4. Earth pressure

Normal case	(tf/m^2)		(t/m)		(m)
Pa0=	0.684	E1=	1.341	Y1=	4.677
Pa1=	1.379				
Pa2=	1.070	E2=	7.519	Y2=	1.765
Pa3=	2.598				
Total			8.860	Σy=	2.206

Seismic case	(tf/m²)		(t/m)		(m)
Pea0=	0.881	Ee1=	1.728	Ye1=	4.677
Pea1=	1.778				
Pea2=	1.773	Ee2=	12.456	Ye2=	1.765
Pea3=	4.304				
Total			11.491		2.120

Construction case	(tf/m²)		(t/m)		(m)
Pca0=	1.266	Ec=	14.637	Yc=	2.220
Pca1=	4.155				

5. Hydrostatic pressure

Normal case

Land side	(tf/m²)		(t/m)		(m)
Wa0=	0.000				
Wa1=	4.100	P1=	8.405	Y3=	1.367

River side	(tf/m²)		(t/m)		(m)
Wp0=	0.000				
Wp1=	1.600	P2=	-1.280	Y4=	0.533

Seismic case

Land side	(tf/m²)		(t/m)		(m)
Wae0=	0.000				
Wae1=	4.100	Pe1=	8.405	Ye3=	1.367

River side	(tf/m²)		(t/m)		(m)
Wpe0=	0.000				
Wpe1=	1.600	Pe2=	-1.280	Ye4=	0.533

6. Hydrodynamic force

Seismic case

		(t/m)		(m)
	P=	1.177	Hg=	1.640

7. Uplift

Normal case	(tf/m²)		(t/m)		(m)
U1=	1.600	U=	-13.680	X1=	2.751
U2=	4.100		(for pile foundation)		-0.126

Seismic case	(tf/m²)		(t/m)		(m)
Ue1=	1.600	Ue=	-13.680	Xe1=	2.751
Ue2=	4.100		(for pile foundation)		-0.126

Normal Case

	Vertical			Horizontal		
	V (tf)	X (m)	Mx (tf-m)	H (tf)	Y (m)	My (tf-m)
Weight of body	18.325	1.674	30.676			
Weight of earth	23.112	2.677	61.871			
Surcharge load	10.120	2.600	26.312			
Weight of water	12.937	2.713	35.095			
Earth pressure				8.860	2.206	19.545
Hydrostatic pressure (Land side)				8.405	1.367	11.487
Hydrostatic pressure (Riverside)				-1.280	0.533	-0.683
Hydrodynamic pressure						
Uplift	-13.680	2.751	-37.632			
Total	50.814		116.323	15.985		30.350

Action force at toe of retaining wall

V0= 50.814 tf / m

H0= 15.985 tf / m

M0=| Mx − My |= 85.973 tf-m / m

Action force at middle of bottom slab of retaining wall

Vc= 50.814 tf / m

Hc= 15.985 tf / m

Mc=| Mx − My |= 35.981 tf-m / m

Seismic Case

	Vertical			Horizontal		
	V (tf)	X (m)	Mx (tf-m)	H (tf)	Y (m)	My (tf-m)
Weight of body	18.325	1.674	30.676	2.199	1.355	2.980
Weight of earth	23.112	2.677	61.871	2.773	2.565	7.115
Surcharge load	10.120	2.600	26.312			
Weight of water	12.937	2.713	35.095			
Earth pressure				14.184	2.120	30.072
Hydrostatic pressure (Land side)				8.405	1.367	11.487
Hydrostatic pressure (Riverside)				-1.280	0.533	-0.683
Hydrodynamic pressure				1.177	1.640	1.930
Uplift	-13.680	2.751	-37.632			
Total	50.814		116.323	27.459		52.901

Action force at toe of retaining wall

Ve0= 50.814 tf / m

He0= 27.459 tf / m

Me0=| Mx − My |= 63.422 tf-m / m

Action force at middle of bottom slab of retaining wall

Vce= 50.814 tf / m

Hce= 27.459 tf / m

Mce=| Mx − My |= 58.532 tf-m / m

Construction Case

	Vertical			Horizontal		
	V (tf)	X (m)	Mx (tf-m)	H (tf)	Y (m)	My (tf-m)
Weight of body	18.325	1.674	30.676			
Weight of earth	33.462	2.686	89.879			
Surcharge load	10.120	2.600	26.312			
Weight of water						
Earth pressure				11.491	2.089	24.006
Hydrostatic pressure (Land side)						
Hydrostatic pressure (Riverside)						
Hydrodynamic pressure						
Uplift						
Total	61.907		146.867	11.491		24.006

Action force at toe of retaining wall

Vc0= 61.907 tf / m

Hc0= 11.491 tf / m

Mc0=| Mx − My |= 122.861 tf-m / m

Action force at middle of bottom slab of retaining wall

Vcc= 61.907 tf / m

Hcc= 11.491 tf / m

Mcc=| Mx − My |= 25.716 tf-m / m

2) Stability Analysis

Type of Pile

The prestressed concrete pile is adopted for the foundation pile of retaining wall.

Refer to stability calculation of center pier.

Pile Diameter and Arrangement

There are many cases for the combination of pile diameter and pile arrangement (number of pile). Judging from the structural size, geological and soil mechanical conditions, the following three alternatives are selected for comparative study. It is noted that the maximum pile diameter that is available in this country, is 600 mm.

Alternative-1	PC Pile Dia.450 mm, type A	36 piles
Alternative-2	PC Pile Dia.500 mm, type A	24 piles
Alternative-3	PC Pile Dia.600 mm, type A	12 piles

The allowable bearing capacity of ground is shown in each alternative pile as follows.

Layer	Li (m)	N – Value Average	Fi (tf / m)	Li·Fi (tf / m)
As	6.30	33	6.60	41.58
Ac	3.30	22	13.20	43.56
Total	9.60			85.14

Alternative – 1 (Dia 450 mm)

$$A = \pi/4\, D^2 = \pi/4 \times (0.45)^2 = 0.159\ m^2$$

$$qd = 500\ tf/m^2 \times A = 79.50\ tf$$

$$U = \pi D = \pi \times 0.45 = 1.414\ m$$

$$Ru = 79.50 + 1.414 \times 85.14 = 199.89\ tf/pile$$

Allowable bearing capacity
for PC pile (Dia 450 mm)

Case	Safety factor	Allowable bearing capacity (tf / pile)
Normal	3	66.63
Seismic	2	99.94

Alternative – 2 (Dia 500 mm)

$$A = \pi/4\, D^2 = \pi/4 \times (0.50)^2 = 0.196\ m^2$$

$$qd = 500\ tf/m^2 \times A = 98.00\ tf$$

$$U = \pi D = \pi \times 0.50 = 1.571\ m$$

$$Ru = 98.00 + 1.571 \times 85.14 = 231.75\ tf/pile$$

Allowable bearing capacity
for PC pile (Dia 500 mm)

Case	Safety factor	Allowable bearing capacity (tf / pile)
Normal	3	77.25
Seismic	2	115.88

Alternative – 3 (Dia 600 mm)

$$A = \pi/4\, D^2 = \pi/4 \times (0.60)^2 = 0.283\ m^2$$

$$qd = 500\ tf/m^2 \times A = 141.50\ tf$$

$$U = \pi D = \pi \times 0.60 = 1.885\ m$$

$$Ru = 141.50 + 1.885 \times 85.14 = 301.99 \text{ tf / pile}$$

Allowable bearing capacity
for PC pile (Dia 600 mm)

Case	Safety factor	Allowable bearing capacity (tf / pile)
Normal	3	100.66
Seismic	2	150.99

Calculation Results

Pile stability analyses for Alternative-1, Alternative-2 and Alternative-3 were conducted based on the conditions mentioned above. As a result Alternative-3 (pile dia.=600mm, n=14 piles) was selected for the economical reason. The calculation results are shown as follows.

COMPARATIVE STUDY ON PILE FOUNDATION FOR DOWNSTREAM APPROACH WALL (EL+4.800: LEFT BANK)

kind of pile	Alternative –1 Dia. 450 (A)			Alternative –2 Dia. 500 (A)			Alternative –3 Dia. 600 (A)		
Pile Arrangement	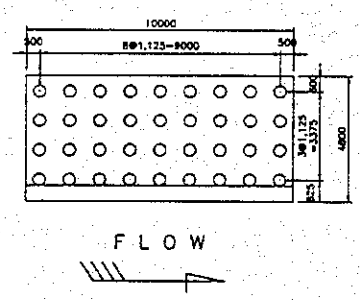			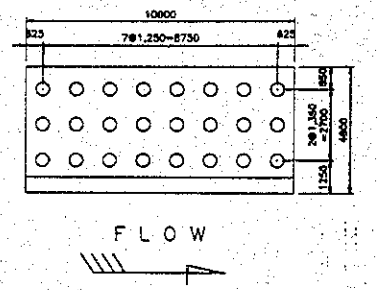			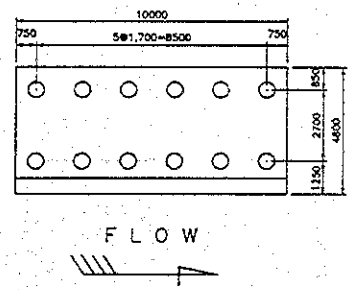		
Number of necessary pile	36 piles (L = 9.60 m)			24 piles (L = 9.60 m)			12 piles (L = 9.60 m)		
Displacement (Horizontal)	Calculation (mm)	Allowable capacity (mm)		Calculation (mm)	Allowable capacity (mm)		Calculation (mm)	Allowable capacity (mm)	
Normal Case	0.64	10		0.94	10		1.41	10	
Design flooding Case									
Constructional Case	0.47	10		0.70	10		1.04	10	
Seismic	0.66	15		0.99	15		1.45	15	
Force / Moment Acting on Pile	Axial load (tf)	Bending moment (tf-m)		Axial load (tf)	Bending moment (tf-m)		Axial load (tf)	Bending moment (tf-m)	
		Calculation	Allowable capacity		Calculation	Allowable capacity		Calculation	Allowable capacity
Normal Case	28.643	2.037	2.99	45.368	2.550	3.93	76.249	7.317	7.84
Design flooding Case									
Constructional Case	28.381	1.408	3.48	45.218	1.607	4.72	78.705	4.858	9.51
Seismic Case	35.774	2.458	4.71	56.025	2.744	6.17	91.235	8.756	11.54
Bearing capacity (tf) Normal	66.63			77.25			100.66		
Bearing capacity (tf) Seismic	99.94			115.88			150.99		
Summary of cost	Rp 38.0 million			Rp 29.3 million			Rp 18.3 million		
Evaluation	Not adopted			Not adopted			Adopted		

TABLE OF STABILITY CALCULATION FOR DOWNSTREAM APPROACH WALL (EL+4.800: LEFT BANK)

Direction		Direction of flowing water				Direction of weir axis			
Case		Normal case	Design Flooding case	Construction case	Seismic case	Normal case	Design Flooding case	Construction case	Seismic case
Quantity of displacement for footing (m)	Horizontal (δ X m)	-	-	-	-	0.0014069	-	0.0010442	0.0014517
	Allowable	0.010	0.010	0.010	0.015	0.010	0.010	0.010	0.015
	Vertical (δ Y m)	-	-	-	-	0.0008282	-	0.0009723	0.0008670
	Allowable	0.015	0.010	0.015	0.015	0.015	0.015	0.015	0.015
Axial force (tf/pile)	No.1	-	-	-	-	76.2490	-	78.7045	91.2348
	No.2	-	-	-	-	8.4410	-	24.4738	-6.5448
	No.3	-	-	-	-	-	-	-	-
	No.4	-	-	-	-	-	-	-	-
	No.5	-	-	-	-	-	-	-	-
	No.6	-	-	-	-	-	-	-	-
	No.7	-	-	-	-	-	-	-	-
	No.8	-	-	-	-	-	-	-	-
	No.9	-	-	-	-	-	-	-	-
Allowable bearing capacity (tf/pile)		-	-	-	-	100.66	-	100.66	150.99
Shearing stress (tf)		-	-	-	-	13.3208	-	9.5758	22.8825
Bending moment (tf-m/pile)		-	-	-	-	7.3172	-	4.8579	8.7556
Allowable bending moment (tf-m/pile)		-	-	-	-	7.84	-	9.51	11.54

Number of piles: n = 12 piles

Pile head condition: Fixing

Pile condition

1. Diameter: Dia.600 mm
2. Geometrical moment of area: $I = 0.00522000\ m^4$
3. Section area of pile $A = 0.167800\ m^2$

3) Stress-Strain Calculation

(i) Wall section

Stress-strain calculations of the structure are made to decide proper reinforcing bar arrangement. Described below are the bar arrangement for the center pier. Deformed steel bars are used for all parts of structure, and bar spacing will be 125 mm or 250 mm.

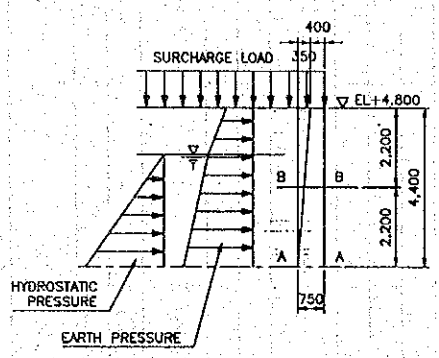

Position of A - A
(Normal Condition)

	H (tf)	Y (m)	My (tf-m)	Remark
Earth pressure-1	1.341	3.677	4.931	(Aerial)
Earth pressure-2	5.108	1.369	6.992	(Underwater)
Hydrostatic pressure-1	4.805	1.033	4.965	(Active side)
Hydrostatic pressure-2	-0.180	0.200	-0.036	(Passive side)
Total	11.074		16.852	

B = 100.00 cm
H = 75.00 cm
Bending moment = 16.852 tf-m / m
Shearing force = 11.074 tf /m

(Seismic Condition)

	H (tf)	Y (m)	My (tf-m)	Remark
Earth pressure-1	1.728	3.677	6.354	(Aerial)
Earth pressure-2	8.461	1.369	11.583	(Underwater)
Hydrostatic pressure-1	4.805	1.033	4.965	(Active side)
Hydrostatic pressure-2	-0.180	0.200	-0.036	(Passive side)
Hydrodynamic force	0.217	1.240	0.269	
Seismic force	3.532	2.410	8.512	
Total	18.564		31.647	

B = 100.00 cm
H = 75.00 cm
Bending moment = 31.647 tf-m / m
Shearing force = 18.564 tf /m

Position of B - B
(Normal Condition)

	H (tf)	Y (m)	My (tf-m)	Remark
Earth pressure-1	1.341	1.477	1.981	(Aerial)
Earth pressure-2	1.114	0.430	0.479	(Underwater)
Water pressure	0.405	0.300	0.122	
Total	2.860		2.581	

B = 100.00 cm
H = 57.50 cm
Bending moment = 2.581 tf-m / m
Shearing force = 2.860 tf /m

(Seismic Condition)

	H (tf)	Y (m)	My (tf-m)	Remark
Earth pressure-1	1.728	1.477	2.552	(Aerial)
Earth pressure-2	1.845	0.430	0.793	(underwater)
Water pressure	0.405	0.300	0.122	
Seismic force	2.371	1.091	2.586	
Total	6.350		6.053	

B = 100.00 cm
H = 57.50 cm
Bending moment = 6.053 tf-m / m
Shearing force = 6.350 tf /m

Results of strength calculation are shown as follows.

		Section A - A		Section B - B	
Case		Normal	Seismic	Normal	Seismic
Member of shape		Rectangle	Rectangle	Rectangle	Rectangle
M	tf-m	16.85	31.65	2.58	6.05
N	tf	0.00	0.00	0.00	0.00
S	tf	11.07	18.56	2.86	6.35
B	cm	100.00	100.00	100.00	100.00
D	cm	66.00	66.00	48.50	48.50
Ac	cm^2	6600.00	6600.00	4850.00	4850.00
As	cm^2	D22-125 = 30.40	D22-125 = 30.40	D22-250 = 15.20	D22-250 = 15.20
P=As/(B×D)		0.00461	0.00461	0.00313	0.00313
N=Es/Ec		15	15	15	15
X0	cm	20.40	20.40	12.80	12.80
K=X0/D		0.309	0.309	0.263	0.263
M/(B×D2)	kgf/cm^2	3.868	7.266	1.097	2.572
S/(B×D)	kgf/cm^2	1.677	2.812	0.59	1.309
(C)		7.216	7.216	8.33	8.33
(S)		16.136	16.136	23.318	23.318
(Z)		1.115	1.115	1.096	1.096
σ c	kgf/cm^2	27.90	52.40	9.10	21.40
σ s	kgf/cm^2	936.00	1759.00	384.00	900.00
τ	kgf/cm^2	1.68	2.81	0.59	1.31
σ ca	kgf/cm^2	75.00	112.50	75.00	112.50
σ sa	kgf/cm^2	1600.00	2400.00	1600.00	2400.00
τ a	kgf/cm^2	3.80	5.70	3.80	5.70

(ii) Footing Section

Loading calculation

W1 (Weight of body) 1.00×2.50 tf/m^3 = 2.500 tf/m^2

W2 (Weight of earth: Aerial) = 2.340 tf/m2

W3 (Weight of earth: Underwater) = 3.100 tf/m2

W4 (Weight of water) = 3.100 tf/m^2

W5 (Surcharge load) = 2.300 tf/m^2

W6 (Uplift) = 4.100 tf/m^2

= 1.600 tf/m^2

Horizontal pressure

<Normal case>

H = 15.985 tf/m (Refer to stability analysis.)

M = 15.985 tf/m×1.899 = 30.356 tf-m/m

N = (0.40 + 0.75)×1/2×4.40×2.50 tf/m3 = 6.325 tf/m

<Seismic case>

H = 27.459 tf/m (Refer to stability analysis)

M = 27.459 tf/m×1.927 = 52.913 tf-m/m

N = 6.325 tf/m

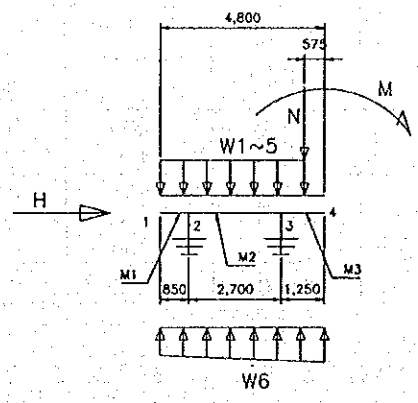

Geometrical moment of inertia

Member	Calculation	Geometrical moment of inertia (m^4)
1~3	$\frac{1}{12}\times 1.00\times 1.00^3$	0.08333

Section area

Member	Calculation	Area (m^2)
1~3	1.00×1.00	1.000

Axial spring constant

$$Kv = a\frac{Ap\times Ep}{L}$$

$a = 0.013\times(L/D)+0.61$ (for prestressed concrete pile)

a $= 0.013\times(9.60/0.60)+0.61 = 0.81800$
Ap $= 0.1678\ m^2$
Ep $= 4.0\times 10^6\ tf/m^2$
Kv $= 57191.83$ tf/m
Kh $= 1/3\times Kv = 19063.94$ tf/m

Summary of calculation results is shown as follows.

(Normal case: Top of footing)

Member	Condition	Distance (m)	Bending moment M (tf –m)	Shearing stress S (tf)	Axial Force N (tf)
M1	Maximum	0.000	0.000	0.000	0.000
	Minimum	0.850	-4.099	-9.708	0.000
M2	Maximum	0.565	-2.209	0.000	6.752
	Minimum	2.700	-30.258	-26.672	6.752
M3	Maximum	1.250	0.000	0.000	0.000
	Minimum	0.000	-30.258	15.512	13.635

(Normal case: Bottom of footing)

Member	Condition	Distance (m)	Bending moment M (tf –m)	Shearing stress S (tf)	Axial Force N (tf)
M1	Maximum	0.000	0.000	0.000	0.000
	Minimum	0.850	-4.099	-9.708	0.000
M2	Maximum	1.381	7.456	0.000	0.000
	Minimum	0.000	-4.099	16.572	0.000
M3	Maximum	1.250	0.000	0.000	0.000
	Minimum	0.000	-3.500	9.187	0.000

(Seismic case: Top of footing)

Member	Condition	Distance (m)	Bending moment M (tf –m)	Shearing stress S (tf)	Axial Force N (tf)
M1	Maximum	0.000	0.000	0.000	0.000
	Minimum	0.850	-4.099	-9.708	0.000
M2	Maximum	0.017	-4.098	0.000	11.158
	Minimum	2.700	-47.715	-33.137	11.158
M3	Maximum	1.250	0.000	0.000	0.000
	Minimum	0.000	-47.715	15.512	22.532

(Seismic case: Bottom of footing)

Member	Condition	Distance (m)	Bending moment M (tf –m)	Shearing stress S (tf)	Axial Force N (tf)
M1	Maximum	0.000	0.000	0.000	0.000
	Minimum	0.850	-4.099	-9.708	0.000
M2	Maximum	1.381	7.456	0.000	0.000
	Minimum	0.000	-4.099	16.572	0.000
M3	Maximum	1.250	0.000	0.000	0.000
	Minimum	0.000	-3.500	9.187	0.000

Results of strength calculation are shown as follows.

		Normal case		Seismic case	
Position		Top Section	Bottom Section	Top Section	Bottom Section
Member of shape		Rectangle	Rectangle	Rectangle	Rectangle
M	tf-m	-30.26	7.46	-47.72	7.46
N	tf	0.00	0.00	0.00	0.00
S	tf	26.67	0.00	33.14	0.00
B	cm	100.00	100.00	100.00	100.00
D	cm	91.00	83.50	91.00	83.50
Ac	cm^2	9100.00	8350.00	9100.00	8350.00
As	cm^2	D22-125 = 30.40	D16-125 = 16.08	D22-125 = 30.40	D16-125 = 16.08
P=As/(B×D)		0.00334	0.00193	0.00334	0.00193
N=Es/Ec		15	15	15	15
X0	cm	24.600	17.800	24.600	17.800
K=X0/D		0.270	0.213	0.270	0.213
M/(B×D2)	kgf/cm^2	3.654	1.070	5.763	1.070
S/(B×D)	kgf/cm^2	2.931	0.000	3.642	0.000
(C)		8.129	10.098	8.129	10.098
(S)		21.933	37.267	21.933	37.267
(Z)		1.099	1.077	1.099	1.077
σ c	kgf/cm^2	29.70	10.80	46.80	10.80
σ s	kgf/cm^2	1202.00	598.00	1896.00	598.00
τ	kgf/cm^2	2.93	0.00	3.64	0.00
σ ca	kgf/cm^2	75.00	75.00	112.50	112.50
σ sa	kgf/cm^2	1600.00	1600.00	2400.00	2400.00
τ a	kgf/cm^2	3.80	3.80	5.70	5.70

(iii) Pile head treatment

a) Vertical bearing pressure for footing concrete

Pnmax = 91.235 tf/pile (in Seismic case)

$$\sigma_{cv} = \frac{P_{N\max}}{\pi D^2/4} = \frac{91235}{\pi/4 \times 60^2} = 32.27 \text{ kgf/cm}^2$$

$\leqq \sigma$ ca = 60.0×1.5 = 90.0 kgf/cm^2.....O.K

b) Punching shear stress for footing concrete

$$\tau_V = \frac{P_{N\max}}{\pi(D+h)h} = \frac{91235}{\pi(60+90)\times 90} = 2.15 \text{ kgf/cm}^2$$

$\leqq \tau$ ca3 = 8.8 kgf/cm^2.....O.K

where

h : Height of between top of footing and pile head (cm)

c) Horizontal bearing pressure for footing concrete

$$\sigma_{ch} = \frac{H}{D\ell}$$

where

l : Stuffing length of pile (cm)
D : Pile diameter (cm)
H : Shearing pressure (kgf)

$P_N$max = 91.23 tf/pile (in Seismic case)
M = 8.76 tf-m
S = 22.88 tf

$$\sigma_{ch} = \frac{22880}{60 \times 10} = 38.13 \text{ kgf/cm}^2 \leqq \sigma \text{ ca} = 60.0 \times 1.5 = 90.0 \text{ kgf/cm}^2$$

.....O.K

d) Vertical punching shearing stress to pile on edge of footing

$$\tau_h = \frac{H}{h'(2\ell + D + 2h')}$$

where

h' : Effective thickness to vertical punching stress on footing (cm)
l : Stuffing length of pile (cm)
D : Pile diameter (cm)
H : Shearing pressure (kgf)

h' = (75-1/2×60) = 45.0 cm

$$\tau_h = \frac{22880}{45.0 \times (2 \times 10 + 60 + 2 \times 45.0)} = 2.99 \text{ kgf/cm}^2$$

≦ τ ca3 = 8.8 kgf/cm² .....O.K

e) Strength of estimated reinforced concrete section

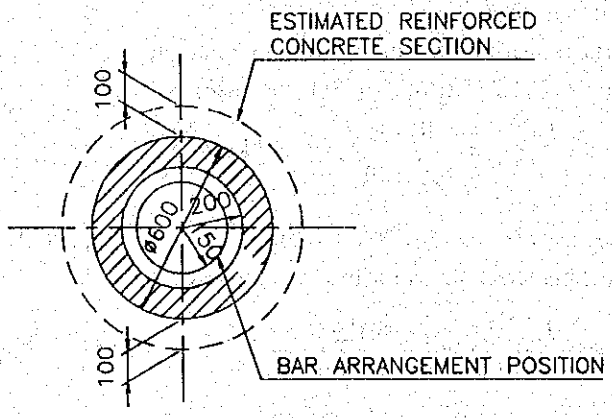

$P_N$min = -6.545 tf/pile (in Seismic case)
M = 8.756 tf-m
S = 22.883 tf
D = 60.00 + 10.00×2 = 80.00cm
a = 20.00 cm×2 = 40.00 cm
d = 25.00 cm

Result of strength calculation is shown as follows.

Member of shape		Circle			
M	tf-m	-8.756	X0	cm	16.90
N	tf	-6.545	K= X0/H		0.212
S	tf	22.883	$M/(B \times H^2)$	kgf/cm^2	1.71
B	cm	80.00	$S/(B \times H)$	kgf/cm^2	3.575
H	cm	80.00	(C)		41.22
D	cm	55.00	(S)		92.549
DD	cm	25.00	(Z)		3.570
DG	cm	25.00	σc	kgf/cm^2	70.50
B0 , R	cm	40.00	σs	kgf/cm^2	2374.00
H0 , R0	cm	20.00	τ	kgf/cm^2	0.00
AC	cm^2	3769.9	σca	kgf/cm^2	112.50
AS , AS1	cm^2	10-D16 = 20.10	σsa	kgf/cm^2	2400.00
P , P1		0.00533	τa	kgf/cm^2	5.70
N= ES/EC		15			

f) Reinforcing bar at pile head treatment

Fixing length of reinforcing bar at footing

$$L_1 \geqq L_0$$

Where

L0 : 35 D (mm)

D : Diameter of reinforcing bar (mm)

$L_1 = 35 \times 16 = 560 \fallingdotseq 600$ mm

Fixing length of reinforcing bar at pile

$$L_2 \geqq 50\,\phi + L_0$$

Where

ϕ : Diameter of PC steel bar (mm)

$L_2 = 50 \times 9.0 + 600 = 1050$ mm

g) Depth of concrete filling

Depth of concrete filling is the same fixing length of reinforcing bar at pile.

$L_3 = 1050$ mm

4.2.4.2 Approach Wall (H=7.50m) at Downstream of Weir

1) Loading Condition

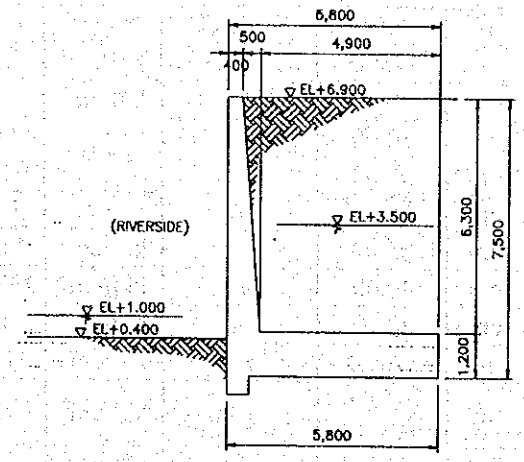

Design Condition

Item	Unit		Item	Unit	
Height of wall	m	6.300	Unit weight of concrete	tf / m^3	2.500
Height of footing	m	1.200	Unit weight of water	tf / m^3	1.000
Total height of wall	m	7.500	Unit weight of soil	tf / m^3	1.800
Crown width	m	0.400	Submerged unit weight	tf / m^3	1.000
Slope of behind side		0.079	Angle of shearing resistance		30.000
Width of bottom section Length at wall	m	0.500	Horizontal seismic intensity		0.120
Width of bottom section at footing	m	4.900	Apparently horizontal seismic intensity		0.240
Total width of wall (m)	m	5.800	Coefficient of earth pressure in Normal case		0.297
Surcharge load in Normal case	tf/m^2	1.000	Coefficient of earth pressure in Seismic case above water		0.383
Surcharge load in Seismic case	tf/m^2	0.500	Coefficient of earth pressure in seismic case below water		0.492
Top elevation of wall				EL m	6.900
Bottom elevation of slab				EL m	-0.600
Water level at land side in Normal case				EL m	3.500
Water level at riverside in Normal case				EL m	1.000
Water level at riverside in Seismic case				EL m	1.000
Water level at land side in Seismic case				EL m	3.500

1. Weight of body

	Weight W (tf)	Vertical length X (m)	Moment MX (tf-m)	Horizontal length Y (m)	Moment MY (tf-m)	Note
1	6.300	0.200	1.260	4.350	27.405	Conc.
2	3.938	0.567	2.231	3.300	12.994	Conc.
3	2.700	0.450	1.215	0.600	1.620	Conc.
4	0.000	2.533	0.000	1.200	0.000	Conc.
5	14.700	3.350	49.245	0.600	8.820	Conc.
Total	27.638	1.952	53.951	1.839	50.839	
		1.173	(for pile foundation)			

1'. Weight of earth

Normal case	Weight W (tf)	Vertical length X (m)	Moment MX (tf-m)	Horizontal length Y (m)	Moment MY (tf-m)
1	2.234	0.765	1.709	6.009	13.427
2	0.334	0.823	0.275	3.133	1.046
3	29.988	3.350	100.460	5.800	173.930
4	14.210	3.350	47.604	2.650	37.657
5	0.000	4.167	0.000	1.200	0.000
Total	46.766	3.208	150.047	4.834	226.059
		-0.083	(for pile foundation)		

Seismic case	Weight W (tf)	Vertical length X (m)	Moment MX (tf-m)	Horizontal length Y (m)	Moment MY (tf-m)
1	2.234	0.765	1.709	6.009	13.427
2	0.334	0.823	0.275	3.133	1.046
3	29.988	3.350	100.460	5.800	173.930
4	14.210	3.350	47.604	2.650	37.657
5	0.000	4.167	0.000	1.200	0.000
Total	46.766	3.208	150.047	4.834	226.059
		-0.083	(for pile foundation)		

Construction case	Weight W (tf)	Vertical length X (m)	Moment MX (tf-m)	Horizontal length Y (m)	Moment MY (tf-m)
1	2.835	0.733	2.079		
2	55.566	3.350	186.146		
3	0.000	4.167	0.000		
4					
5					
Total	58.401	3.223	188.225	0.000	0.000
		-0.098	(for pile foundation)		

2. Surcharge load

	Weight W(tf)	Vertical length X (m)		
Normal, Construction	5.400	3.100	0.025	(for pile foundation)
Seismic	2.700	3.100	0.025	(for pile foundation)

3. Weight of water

Normal case	Weight W (tf)	Vertical length X (m)	Moment MX (tf-m)	Horizontal length Y (m)	Moment MY (tf-m)
9	0.334	0.823	0.275	3.133	1.046
10	14.210	3.350	47.604	2.650	37.657
11	0.000	4.167	0.000	1.200	0.000

Total	14.544	3.292	47.878	2.661	38.702
		-0.167	(for pile foundation)		

Seismic case	Weight W (tf)	Vertical length X (m)	Moment MX (tf-m)	Horizontal length Y (m)	Moment MY (tf-m)
9	0.334	0.823	0.275	3.133	1.046
10	14.210	3.350	47.604	2.650	37.657
11	0.000	4.167	0.000	1.200	0.000
Total	14.544	3.292	47.878	2.661	38.702
		-0.167	(for pile foundation)		

4. Earth pressure

Normal case	(tf/m²)		(tf/m)		(m)
Pa0=	0.297	E1=	4.102	Y1=	5.373
Pa1=	2.116				
Pa2=	1.308	E2=	9.518	Y2=	1.752
Pa3=	3.335				
Total			13.620	Σy=	2.842
Seismic case	(tf/m²)		(tf/m)		(m)
Pea0=	0.192	Ee1=	4.637	Ye1=	5.313
Pea1=	2.536				
Pea2=	2.167	Ee2=	15.262	Ye2=	1.764
Pea3=	5.279				
			19.899		2.591
Construction case	(tf/m²)		(tf/m)		(m)
Pca0=	0.297	Ec=	17.275	Yc=	2.661
Pca1=	4.309				

5. Hydrostatic pressure

Normal case					
Land side	(tf/m²)		(tf/m)		(m)
Wa0=	0.000				
Wa1=	4.100	P1=	8.405	Y3=	1.367
River side	(tf/m²)		(tf/m)		(m)
Wp0=	0.000				
Wp1=	1.600	P2=	-1.280	Y4=	0.533
Seismic case					
Land side	(tf/m²)		(tf/m)		(m)
Wae0=	0.000				
Wae1=	4.100	Pe1=	8.405	Ye3=	1.367
River side	(tf/m²)		(tf/m)		(m)
Wpe0=	0.000				
Wpe1=	1.600	Pe2=	-1.280	Ye4=	0.533

6. Hydrodynamic force

Seismic case

	(tf/m)		(m)
P=	1.177	Hg=	1.640

7. Uplift

Normal case	(tf/m²)	(tf/m)	(m)

U1=	1.600	U=	-16.530	X1=	3.324
U2=	4.100		(for pile foundation)		-0.199
Seismic case	(tf/m²)		(tf/m)		(m)
Ue1=	1.600	Ue=	-16.530	Xe1=	3.324
Ue2=	4.100		(for pile foundation)		-0.199

Normal Case

	Vertical			Horizontal		
	V (tf)	X (m)	Mx (tf-m)	H (tf)	Y (m)	My (tf-m)
Weight of body	27.638	1.952	53.948			
Weight of earth	46.766	3.208	150.025			
Surcharge load	5.400	3.100	16.740			
Weight of water	14.544	3.292	47.878			
Earth pressure				13.620	2.842	38.712
Hydrostatic pressure (Land side)				8.405	1.367	11.487
Hydrostatic pressure (Riverside)				-1.280	0.533	-0.683
Hydrodynamic pressure						
Uplift	-16.530	3.324	-54.945			
Total	77.817		213.647	20.745		49.516

Action force at toe of retaining wall

V0= 77.817 tf / m

H0= 20.745 tf / m

M0=| Mx − My |= 164.131 tf-m / m

Action force at middle of bottom slab of retaining wall

Vc= 77.817 tf / m

Hc= 20.745 tf / m

Mc=| Mx − My |= 61.539 tf-m / m

Seismic Case

	Vertical			Horizontal		
	V (tf)	X (m)	Mx (tf-m)	H (tf)	Y (m)	My (tf-m)
Weight of body	27.638	1.952	53.948	3.317	1.839	6.099
Weight of earth	46.766	3.208	150.025	5.612	2.661	14.934
Surcharge load	2.700	3.100	8.370			
Weight of water	14.544	3.292	47.878			
Earth pressure				19.899	2.591	51.565
Hydrostatic pressure (Land side)				8.405	1.367	11.487
Hydrostatic pressure (Riverside)				-1.280	0.533	-0.683
Hydrodynamic pressure				1.177	1.640	1.930
Uplift	-16.530	3.324	-54.945			
Total	75.117		205.277	37.130		85.332

Action force at toe of retaining wall

Ve0= 75.117 tf / m

He0= 37.130 tf / m

Me0=| Mx − My |= 119.945 tf-m / m

Action force at middle of bottom slab of retaining wall

Vce= 75.117 tf / m

Hce= 37.130 tf / m

Mce=| Mx − My |= 97.895 tf-m / m

Seismic Case

	Vertical			Horizontal		
	V (tf)	X (m)	Mx (tf-m)	H (tf)	Y (m)	My (tf-m)
Weight of body	27.638	1.952	53.948			
Weight of earth	58.401	3.223	188.226			
Surcharge load	5.400	3.100	16.740			
Weight of water						
Earth pressure				17.275	2.661	45.973
Hydrostatic pressure (Land side)						
Hydrostatic pressure (Riverside)						
Hydrodynamic pressure						
Uplift						
Total	91.439		258.915	17.275		45.973

Action force at toe of retaining wall

Vc0= 91.439 tf / m

Hc0= 17.275 tf / m

Mc0=| Mx − My |= 212.942 tf-m / m

Action force at middle of bottom slab of retaining wall

Vcc= 91.439 tf / m

Hcc= 17.275 tf / m

Mcc=| Mx − My |= 52.230 tf-m / m

2) Stability Analysis

Type of Pile

The prestressed concrete pile is adopted for the foundation pile of retaining wall.

Refer to stability calculation of center pier.

Pile Diameter and Arrangement

Pile diameter of 600 mm is adopted for the foundation pile of retaining wall. (Refer to Approach wall H = 5.40 m)

PC Pile Dia.600 mm, type A 18 piles

The allowable bearing capacity of ground is shown in each alternative pile as follows.

Layer	Li (m)	N – Value Average	Fi (tf / m)	Li·Fi (tf / m)
As	6.50	31	6.20	40.30
Ac	2.80	13	7.80	21.84
Dc	1.10	22	13.20	14.52
Total	10.40			76.66

$$A = \pi/4\, D^2 = \pi/4 \times (0.60)^2 = 0.283\ m^2$$

$$qd = 500\ tf / m^2 \times A = 141.50\ tf$$

$$U = \pi D = \pi \times 0.60 = 1.885\ m$$

$$Ru = 141.50 + 1.885 \times 76.66 = 286.00\ tf / pile$$

Allowable bearing capacity
for PC pile (Dia 600 mm)

Case	Safety factor	Allowable bearing capacity (tf / pile)
Normal	3	95.33
Seismic	2	143.00

<u>Calculation Results</u>

The calculation results are shown as follows.

TABLE OF STABILITY CALCULATION FOR DOWNSTREAM APPROACH WALL (EL+6.900: RIGHT BANK)

Direction		Direction of flowing water				Direction of weir axis			
Case		Normal case	Design Flooding case	Construction case	Seismic case	Normal case	Design Flooding case	Construction case	Seismic case
Quantity of displacement for footing (m)	Horizontal (δ X m)	-	-	-	-	0.0012919	-	0.0010962	0.0013774
	Allowable	0.010	0.010	0.010	0.015	0.010	0.010	0.010	0.015
	Vertical (δ Y m)	-	-	-	-	0.0008624	-	0.0009960	0.0008626
	Allowable	0.015	0.010	0.015	0.015	0.015	0.015	0.015	0.015
Axial force (tf/pile)	No.1	-	-	-	-	82.3971	-	85.5183	98.9726
	No.2	-	-	-	-	43.2317	-	50.7994	41.7317
	No.3	-	-	-	-	4.0662	-	16.0805	-15.5093
	No.4	-	-	-	-	-	-	-	-
	No.5	-	-	-	-	-	-	-	-
	No.6	-	-	-	-	-	-	-	-
	No.7	-	-	-	-	-	-	-	-
	No.8	-	-	-	-	-	-	-	-
	No.9	-	-	-	-	-	-	-	-
Allowable bearing capacity (tf/pile)		-	-	-	-	95.33	-	95.33	143.00
Shearing stress (tf)		-	-	-	-	11.5250	-	9.5972	20.6278
Bending moment (tf-m/pile)		-	-	-	-	6.3254	-	5.0261	8.0433
Allowable bending moment (tf-m/pile)		-	-	-	-	7.38	-	8.63	10.60

Number of piles: n = 18 piles

Pile head condition: Fixing

<u>Pile condition</u>

1. Diameter: Dia.600 mm
2. Geometrical moment of area: $I = 0.00522000\ m^4$
3. Section area of pile $A = 0.167800\ m^2$

3) Stress-Strain Calculation

(i) Wall section

Stress-strain calculations of the structure are made to decide proper reinforcing bar arrangement. Described below are the bar arrangement for the center pier. Deformed steel bars are used for all parts of structure, and bar spacing will be 125 mm or 250 mm.

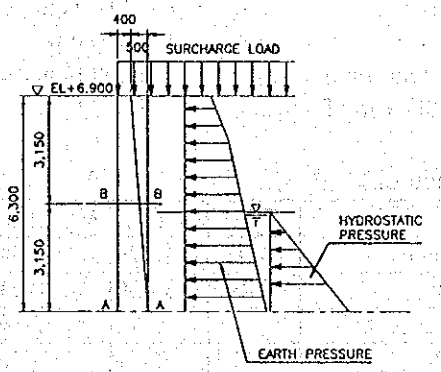

Position of A - A
(Normal Condition)

	H (tf)	Y (m)	My (tf-m)	Remark
Earth pressure-1	4.102	4.173	17.117	(Aerial)
Earth pressure-2	5.872	1.279	7.510	(Underwater)
Hydrostatic pressure-1	4.205	0.967	4.065	(Active side)
Hydrostatic pressure-2	-0.080	0.133	-0.011	(Passive side)
Total	14.099		28.681	

B = 100.00 cm
H = 90.00 cm
Bending moment = 28.681 tf-m / m
Shearing force = 14.099 tf /m

(Seismic Condition)

	H (tf)	Y (m)	My (tf-m)	Remark
Earth pressure-1	4.637	4.113	19.072	(Aerial)
Earth pressure-2	9.475	1.287	12.196	(Underwater)
Hydrostatic pressure-1	4.205	0.967	4.065	(Active side)
Hydrostatic pressure-2	-0.080	0.133	-0.011	(Passive side)
Hydrodynamic force	0.203	1.160	0.235	
Seismic force	6.840	3.474	23.766	
Total	25.280		59.324	

B = 100.00 cm
H = 90.00 cm
Bending moment = 59.324 tf-m / m
Shearing force = 25.280 tf /m

Position of B - B
(Normal Condition)

	H (tf)	Y (m)	My (tf-m)	Remark
Earth pressure-1	3.590	1.273	4.569	(Aerial)
Earth pressure-2				(Underwater)
Total	3.590		4.569	

B = 100.00 cm
H = 65.00 cm
Bending moment = 4.569 tf-m / m
Shearing force = 3.590 tf /m

(Seismic Condition)

	H (tf)	Y (m)	My (tf-m)	Remark
Earth pressure-1	4.025	1.129	4.543	(Aerial)
Seismic force	0.496	1.450	0.719	
Total	4.521		5.262	

B = 100.00 cm
H = 65.00 cm
Bending moment = 5.262 tf-m / m
Shearing force = 4.521 tf /m

Results of strength calculation are shown as follows.

		Section A - A		Section B - B	
Case		Normal	Seismic	Normal	Seismic
Member of shape		Rectangle	Rectangle	Rectangle	Rectangle
M	tf-m	28.68	63.98	4.57	5.26
N	tf	0.00	0.00	0.00	0.00
S	tf	14.10	26.58	3.59	4.52
B	cm	100.00	100.00	100.00	100.00
D	cm	81.00	81.00	56.00	56.00
Ac	cm^2	8100.00	8100.00	5600.00	5600.00
As	cm^2	D25-125 = 39.28	D25-125 = 39.28	D25-250 = 19.64	D25-250 = 19.64
P=As/(B×D)		0.00485	0.00485	0.00351	0.00351
N=Es/Ec		15	15	15	15
X0	cm	25.60	25.60	15.50	15.50
K=X0/D		0.316	0.316	0.276	0.276
M/(B×D2)	kgf/cm^2	4.371	9.752	1.457	1.677
S/(B×D)	kgf/cm^2	1.741	3.281	0.641	0.807
(C)		7.083	7.083	7.981	7.981
(S)		15.363	15.363	20.935	20.935
(Z)		1.118	1.118	1.101	1.101
σ c	kgf/cm^2	31.00	69.10	11.60	13.40
σ s	kgf/cm^2	1007.00	2247.00	458.00	527.00
τ	kgf/cm^2	1.74	3.28	0.64	0.81
σ ca	kgf/cm^2	75.00	112.50	75.00	112.50
σ sa	kgf/cm^2	1600.00	2400.00	1600.00	2400.00
τ a	kgf/cm^2	3.80	5.70	3.80	5.70

(ii) Footing Section

Loading calculation

W1 (Weight of body) 1.20×2.50 tf/m^3 = 3.000 tf/m^2

W2 (Weight of earth: Aerial) = 6.120 tf/m2

W3 (Weight of earth: Underwater) = 2.900 tf/m2

W4 (Weight of water) = 2.900 tf/m^2

W5 (Surcharge load) = 1.000 tf/m^2

W6 (Uplift) = 4.100 tf/m^2

= 1.600 tf/m^2

Horizontal pressure

<Normal case>

H = 20.745 tf/m (Refer to stability analysis.)

M = 20.745 tf/m×2.387 = 49.518 tf-m/m

N = (0.40 + 0.90)×1/2×6.30×2.50 tf/m^3 = 10.238 tf/m

<Seismic case>

H = 37.130 tf/m (Refer to stability analysis)

M = 37.130 tf/m×2.299 = 85.362 tf-m/m

N = 10.238 tf/m

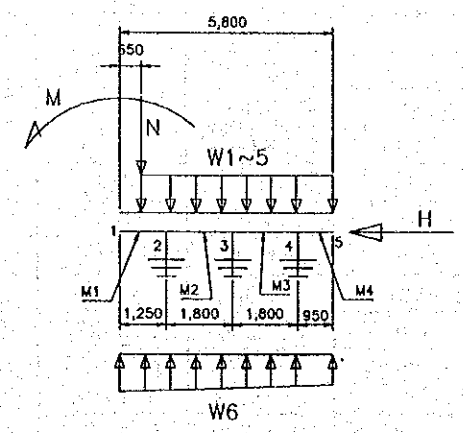

Geometrical moment of inertia

Member	Calculation	Geometrical moment of inertia (m^4)
1~4	$\frac{1}{12}\times 1.00\times 1.20^3$	0.14400

Section area

Member	Calculation	Area (m^2)
1~3	1.00×1.20	1.200

Axial spring constant

$$Kv = a\frac{Ap\times Ep}{L}$$

$a = 0.013\times(L/D)+0.61$ (for prestressed concrete pile)

a $= 0.013\times(10.40/0.60)+0.61 \quad = 0.835333$

Ap $= 0.1678\ m^2$

Ep $= 4.0\times 10^6\ tf/m^2$

Kv $= 53911.11$ tf/m

Kh $= 1/3\times Kv \quad = 17970.37$ tf/m

Summary of calculation results is shown as follows.

(Normal case: Top of footing)

Member	Condition	Distance (m)	Bending moment M (tf –m)	Shearing stress S (tf)	Axial Force N (tf)
M1	Maximum	0.000	0.000	0.000	0.000
	Minimum	1.250	-37.523	-18.081	14.099
M2	Maximum	1.597	-20.530	0.000	9.318
	Minimum	0.000	-37.523	21.462	9.318
M3	Maximum	1.582	-5.102	0.000	4.634
	Minimum	0.000	-20.799	20.030	4.634
M4	Maximum	0.950	0.000	0.000	0.000
	Minimum	0.000	-5.395	11.424	0.000

(Normal case: Bottom of footing)

Member	Condition	Distance (m)	Bending moment M (tf –m)	Shearing stress S (tf)	Axial Force N (tf)
M1	Maximum	0.000	0.000	0.000	0.000
	Minimum	1.250	-2.699	-7.843	0.000
M2	Maximum	0.890	2.654	0.000	0.000
	Minimum	1.800	-2.842	-12.017	0.000
M3	Maximum	0.783	1.077	0.000	0.000
	Minimum	1.800	-5.395	-12.658	0.000
M4	Maximum	0.950	0.000	0.000	0.000
	Minimum	0.000	-5.395	11.424	0.000

(Seismic case: Top of footing)

Member	Condition	Distance (m)	Bending moment M (tf –m)	Shearing stress S (tf)	Axial Force N (tf)
M1	Maximum	0.000	0.000	0.000	0.000
	Minimum	1.250	-67.985	-17.656	25.280
M2	Maximum	1.800	-33.937	7.428	16.707
	Minimum	0.000	-67.985	30.636	16.707
M3	Maximum	1.800	-5.170	5.192	8.310
	Minimum	0.000	-33.937	27.004	8.310
M4	Maximum	0.950	0.000	0.000	0.000
	Minimum	0.000	-5.170	10.949	0.000

(Seismic case: Bottom of footing)

Member	Condition	Distance (m)	Bending moment M (tf –m)	Shearing stress S (tf)	Axial Force N (tf)
M1	Maximum	0.000	0.000	0.000	0.000
	Minimum	1.250	-2.519	-7.418	0.000
M2	Maximum	0.890	2.639	0.000	0.000
	Minimum	1.800	-2.648	-11.559	0.000
M3	Maximum	0.780	1.086	0.000	0.000
	Minimum	1.800	-5.170	-12.190	0.000
M4	Maximum	0.950	0.000	0.000	0.000
	Minimum	0.000	-5.170	10.949	0.000

Results of strength calculation are shown as follows.

		Normal case		Seismic case	
Position		Top Section	Bottom Section	Top Section	Bottom Section
Member of shape		Rectangle	Rectangle	Rectangle	Rectangle
M	tf-m	-37.52	2.65	-67.99	2.63
N	tf	0.00	0.00	0.00	0.00
S	tf	21.46	0.00	30.64	0.00
B	cm	100.00	100.00	100.00	100.00
D	cm	111.00	103.50	111.00	103.50
Ac	cm^2	11100.00	10350.00	11100.00	10350.00
As	cm^2	D22-125 = 30.40	D16-125 = 16.08	D22-125 = 30.40	D16-125 = 16.08
P=As/(B×D)		0.00274	0.00155	0.00274	0.00155
N=Es/Ec		15	15	15	15
X0	cm	27.60	20.10	27.60	20.10
K=X0/D		0.248	0.194	0.248	0.194
M/(B×D2)	kgf/cm^2	3.045	0.247	5.518	0.246
S/(B×D)	kgf/cm^2	1.933	0.000	2.760	0.000
(C)		8.776	11.030	8.776	11.030
(S)		26.540	45.875	26.540	45.875
(Z)		1.090	1.069	1.090	1.069
σ c	kgf/cm^2	26.70	2.70	48.40	2.70
σ s	kgf/cm^2	1212.00	170.00	2197.00	169.00
τ	kgf/cm^2	1.93	0.00	2.76	0.00
σ ca	kgf/cm^2	75.00	75.00	112.50	112.50
σ sa	kgf/cm^2	1600.00	1600.00	2400.00	2400.00
τ a	kgf/cm^2	3.80	3.80	5.70	5.70

(iii) Pile head treatment

a) Vertical bearing pressure for footing concrete

Pnmax = 98.973 tf/pile (in Seismic case)

$$\sigma_{cv} = \frac{P_{N\max}}{\pi D^2/4} = \frac{98973}{\pi/4 \times 60^2} = 35.00 \text{ kgf/cm}^2$$

$\leqq \sigma$ ca = 60.0×1.5 = 90.0 kgf/cm² ..... O.K

b) Punching shear stress for footing concrete

$$\tau_V = \frac{P_{N\max}}{\pi(D+h)h} = \frac{98973}{\pi(60+110)\times 110} = 1.68 \text{ kgf/cm}^2$$

$\leqq \tau$ ca3 = 8.8 kgf/cm² ..... O.K

where

h : Height of between top of footing and pile head (cm)

c) Horizontal bearing pressure for footing concrete

$$\sigma_{ch} = \frac{H}{D\ell}$$

where

l : Stuffing length of pile (cm)
D : Pile diameter (cm)
H : Shearing pressure (kgf)

$P_N$max = 98.97 tf/pile (in Seismic case)
M = 8.04 tf-m
S = 20.63 tf

$$\sigma_{ch} = \frac{20630}{60 \times 10} = 34.38 \text{ kgf/cm}^2 \leqq \sigma \text{ ca} = 60.0 \times 1.5 = 90.0 \text{ kgf/cm}^2$$

..... O.K

d) Vertical punching shearing stress to pile on edge of footing

$$\tau_h = \frac{H}{h'(2\ell + D + 2h')}$$

where

h' : Effective thickness to vertical punching stress on footing (cm)
l : Stuffing length of pile (cm)
D : Pile diameter (cm)
H : Shearing pressure (kgf)

h' = (75-1/2×60) = 45.0 cm

$$\tau_h = \frac{20630}{45.0 \times (2 \times 10 + 60 + 2 \times 45.0)} = 2.70 \text{ kgf/cm}^2$$

≦ τ ca3 = 8.8 kgf/cm²..... O.K

e) Strength of estimated reinforced concrete section

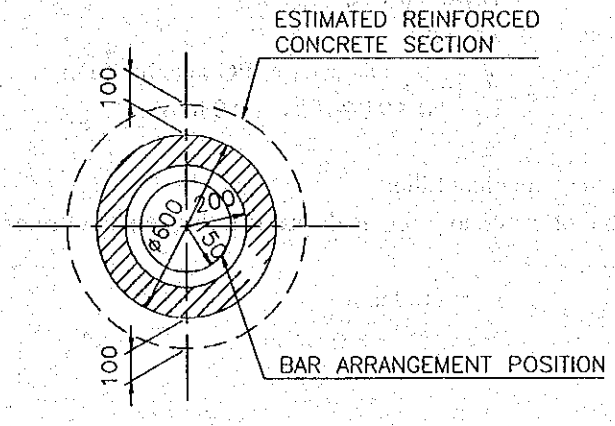

$P_N$min = -15.51 tf/pile (in Seismic case)
M = 8.04 tf-m
S = 20.63 tf
D = 60.00 + 10.00×2 = 80.00cm
a = 20.00 cm×2 = 40.00 cm
d = 25.00 cm

Result of strength calculation is shown as follows.

Member of shape		Circle			
M	tf-m	-8.040	X0	cm	17.00
N	tf	-15.509	K= X0/H		0.213
S	tf	20.628	$M/(B \times H^2)$	kgf/cm^2	1.570
B	cm	80.0	$S/(B \times H)$	kgf/cm^2	3.223
H	cm	80.0	(C)		38.532
D	cm	55.0	(S)		86.012
DD	cm	25.0	(Z)		3.623
DG	cm	25.0	Σc	kgf/cm^2	60.50
B0 , R	cm	40.0	Σs	kgf/cm^2	2026.00
H0 , R0	cm	20.0	τ	kgf/cm^2	11.68
AC	cm^2	3769.90	Σca	kgf/cm^2	112.50
AS , AS1	cm^2	10-D19 = 28.40	Σsa	kgf/cm^2	2400.00
P , P1		0.00753	Ta	kgf/cm^2	5.70
N= ES/EC		15			

f) Reinforcing bar at pile head treatment

Fixing length of reinforcing bar at footing

$$L_1 \geqq L_0$$

Where

L0 : 35 D (mm)

D : Diameter of reinforcing bar (mm)

$L_1 = 35 \times 19 = 665 \fallingdotseq 700$ mm

Fixing length of reinforcing bar at pile

$$L_2 \geqq 50\,\phi + L_0$$

Where

ϕ : Diameter of PC steel bar (mm)

$L_2 = 50 \times 9.0 + 700 = 1150$ mm

g) Depth of concrete filling

Depth of concrete filling is the same fixing length of reinforcing bar at pile.

$L_3 = 1150$ mm

4.2.4.3 Approach Wall (H=9.10m) at Downstream of Weir

1) Loading Condition

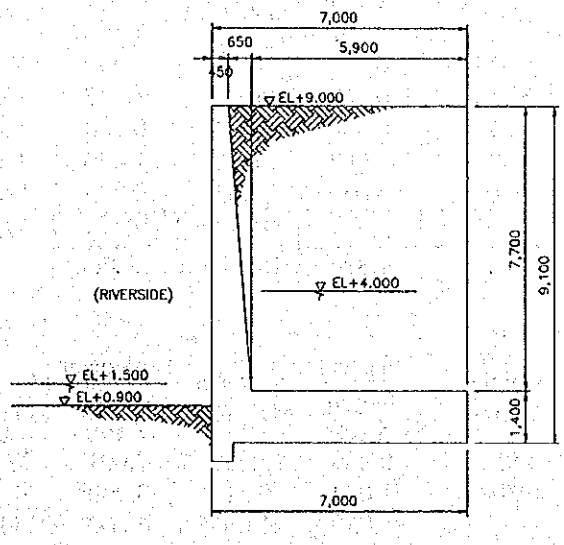

Design Condition

Item	Unit		Item	Unit	
Height of wall	m	7.700	Unit weight of concrete	tf / m^3	2.500
Height of footing	m	1.400	Unit weight of water	tf / m^3	1.000
Total height of wall	m	9.100	Unit weight of soil	tf / m^3	1.800
Crown width	m	0.450	Submerged unit weight	tf / m^3	1.000
Slope of behind side		0.084	Angle of shearing resistance		30.000
Width of bottom section Length at wall	m	0.650	Horizontal seismic intensity		0.120
Width of bottom section at footing	m	5.900	Apparently horizontal seismic intensity		0.240
Total width of wall (m)	m	7.000	Coefficient of earth pressure in Normal case		0.297
Surcharge load in Normal case	tf/m^2	1.000	Coefficient of earth pressure in Seismic case above water		0.383
Surcharge load in Seismic case	tf/m^2	0.500	Coefficient of earth pressure in seismic case below water		0.492
Top elevation of wall				EL m	9.000
Bottom elevation of slab				EL m	-0.100
Water level at land side in Normal case				EL m	4.000
Water level at riverside in Normal case				EL m	1.500
Water level at riverside in Seismic case				EL m	1.500
Water level at land side in Seismic case				EL m	4.000

1. Weight of body

	Weight W (tf)	Vertical length X (m)	Moment MX(tf-m)	Horizontal length Y (m)	Moment MY(tf-m)	Note
1	8.663	0.225	1.949	5.250	45.478	Conc.
2	6.256	0.667	4.171	3.967	24.816	Conc.
3	3.850	0.550	2.118	0.700	2.695	Conc.
4	0.000	3.067	0.000	1.400	0.000	Conc.
5	20.650	4.050	83.633	0.700	14.455	Conc.
Total	39.419	2.331	91.870	2.218	87.445	
		1.394	(for pile foundation)			

1'. Weight of earth

Normal case	Weight W (tf)	Vertical length X (m)	Moment MX(tf-m)	Horizontal length Y (m)	Moment MY(tf-m)
1	3.951	0.889	3.512	7.001	27.657
2	0.308	1.024	0.315	3.200	0.985
3	53.100	4.050	215.055	6.600	350.460
4	15.930	4.050	64.517	2.750	43.808
5	0.000	5.033	0.000	1.400	0.000
Total	73.288	3.867	283.399	5.770	422.909
		-0.142	(for pile foundation)		

Seismic case	Weight W (tf)	Vertical length X (m)	Moment MX(tf-m)	Horizontal length Y (m)	Moment MY(tf-m)
1	3.951	0.889	3.512	7.001	27.657
2	0.308	1.024	0.315	3.200	0.985
3	53.100	4.050	215.055	6.600	350.460
4	15.930	4.050	64.517	2.750	43.808
5	0.000	5.033	0.000	1.400	0.000
Total	73.288	3.867	283.399	5.770	422.909
		-0.142	(for pile foundation)		

Construction case	Weight W (tf)	Vertical length X (m)	Moment MX(tf-m)	Horizontal length Y (m)	Moment MY(tf-m)
1	4.505	0.883	3.979		
2	81.774	4.050	331.185		
3	0.000	5.033	0.000		
4					
5					
Total	86.279	3.885	335.164	0.000	0.000
		-0.160	(for pile foundation)		

2. Surcharge load

	Weight W(tf)	Vertical length X(m)		
Normal, Construction	6.550	3.725	0.000	(for pile foundtion)
Seismic	3.275	3.725	0.000	(for pile foundtion)

3. Weight of water

Normal case	Weight W (tf)	Vertical length X (m)	Moment MX(tf-m)	Horizontal length Y (m)	Moment MY(tf-m)
9	0.308	1.024	0.315	3.200	0.984
10	15.930	4.050	64.517	2.750	43.808
11	0.000	5.033	0.000	1.400	0.000
Total	16.238	3.993	64.832	2.759	44.792
		-0.268	(for pile foundation)		

Seismic case	Weight W (tf)	Vertical length X (m)	Moment MX(tf-m)	Horizontal length Y (m)	Moment MY(t-m)
9	0.308	1.024	0.315	3.200	0.984
10	15.930	4.050	64.517	2.750	43.808
11	0.000	5.033	0.000	1.400	0.000
Total	16.238	3.993	64.832	2.759	44.792
		-0.268	(for pile foundation)		

4. Earth pressure

Normal case	(tf/m²)		(t/m)		(m)
Pa0=	0.297	E1=	8.173	Y1=	5.918
Pa1=	2.972				
Pa2=	1.783	E2=	12.247	Y2=	1.775
Pa3=	4.191				
Total			20.420	Σy=	3.433

Seismic case	(tf/m²)		(t/m)		(m)
Pea0=	0.192	Ee1=	9.578	Ye1=	5.850
Pea1=	3.639				
Pea2=	2.954	Ee2=	19.785	Ye2=	1.785
Pea3=	6.697				
			29.362		3.111

Construction case	(tf/m²)		(t/m)		(m)
Pca0=	0.297	Ec=	24.855	Yc=	3.198
Pca1=	5.165				

5. Hydrostatic pressure

Normal case					
Land side	(tf/m²)		(t/m)		(m)
Wa0=	0.000				
Wa1=	4.100	P1=	8.405	Y3=	1.367
River side	(tf/m²)		(t/m)		(m)
Wp0=	0.000				
Wp1=	1.600	P2=	-1.280	Y4=	0.533
Seismic case					
Land side	(tf/m²)		(t/m)		(m)
Wae0=	0.000				
Wae1=	4.100	Pe1=	8.405	Ye3=	1.367
River side	(tf/m²)		(t/m)		(m)
Wpe0=	0.000				
Wpe1=	1.600	Pe2=	-1.280	Ye4=	0.533

6. Hydrodynamic force

Seismic case

	(t/m)		(m)
P=	1.177	Hg=	1.640

7. Uplift

Normal case	(tf/m²)		(t/m)		(m)
U1=	1.600	U=	-19.950	X1=	4.012
U2=	4.100		(for pile foundation)		-0.287
Seismic					
Ue1=	1.600	Ue=	-19.950	Xe1=	4.012
Ue2=	4.100		(for pile foundation)		-0.287

Normal Case

	Vertical			Horizontal		
	V (tf)	X (m)	Mx (tf-m)	H (tf)	Y (m)	My (tf-m)
Weight of body	39.419	2.331	91.885			
Weight of earth	73.288	3.867	283.406			
Surcharge load	6.550	3.725	24.399			
Weight of water	16.238	3.993	64.832			
Earth pressure				20.420	3.433	70.102
Hydrostatic pressure (Land side)				8.405	1.367	11.487
Hydrostatic pressure (Riverside)				-1.280	0.533	-0.683
Hydrodynamic pressure						
Uplift	-19.950	4.012	-80.033			
Total	115.545		384.488	27.545		80.906

Action force at toe of retaining wall

V0= 115.545 tf / m

H0= 27.545 tf / m

M0=| Mx − My |= 303.582 tf-m / m

Action force at middle of bottom slab of retaining wall

Vc= 115.545 tf / m

Hc= 27.545 tf / m

Mc=| Mx − My |= 100.824 tf-m / m

Seismic Case

	Vertical			Horizontal		
	V (tf)	X (m)	Mx (tf-m)	H (tf)	Y (m)	My (tf-m)
Weight of body	39.419	2.331	91.885	4.730	2.218	10.492
Weight of earth	73.288	3.867	283.406	8.795	2.759	24.260
Surcharge load	3.275	3.725	12.199			
Weight of water	16.238	3.993	64.832			
Earth pressure				29.362	3.111	91.345
Hydrostatic pressure (Land side)				8.405	1.367	11.487
Hydrostatic pressure (Riverside)				-1.280	0.533	-0.683
Hydrodynamic pressure				1.177	1.640	1.930
Uplift	-19.950	4.012	-80.033			
Total	112.270		372.289	51.189		138.830

Action force at toe of retaining wall

Ve0= 112.270 tf / m

He0= 51.189 tf / m

Me0=| Mx − My |= 233.458 tf-m / m

Action force at middle of bottom slab of retaining wall

Vce= 112.270 tf / m

Hce= 51.189 tf / m

Mce=| Mx − My |= 159.486 tf-m / m

Construction Case

	Vertical			Horizontal		
	V (tf)	X (m)	Mx (tf-m)	H (tf)	Y (m)	My (tf-m)
Weight of body	39.419	2.331	91.885			
Weight of earth	86.279	3.885	335.192			
Surcharge load	6.550	3.725	24.399			
Weight of water						
Earth pressure				24.855	3.198	79.494
Hydrostatic pressure (Land side)						
Hydrostatic pressure (Riverside)						
Hydrodynamic pressure						
Uplift						
Total	132.247		451.476	24.855		79.494

Action force at toe of retaining wall

Vc0= 132.247 tf / m

Hc0= 24.855 tf / m

Mc0=| Mx − My |= 371.982 tf-m / m

Action force at middle of bottom slab of retaining wall

Vcc= 132.247 tf / m

Hcc= 24.855 tf / m

Mcc=| Mx − My |= 90.884 tf-m / m

2) Stability Analysis

Type of Pile

The prestressed concrete pile is adopted for the foundation pile of retaining wall.

Refer to stability calculation of center pier.

Pile Diameter and Arrangement

Pile diameter of 600 mm is adopted for the foundation pile of retaining wall. (Refer to Approach wall H = 5.40 m)

PC Pile Dia.600 mm, type A 36 piles

The allowable bearing capacity of ground is shown in each alternative pile as follows.

Layer	Li (m)	N – Value Average	Fi (tf / m)	Li·Fi (tf / m)
As	7.00	31	6.20	43.40
Ac	2.80	13	7.80	21.84
Dc	1.10	22	13.20	14.52
Total	10.90			79.76

$$A = \pi/4\, D^2 = \pi/4 \times (0.60)^2 = 0.283\ m^2$$

$$qd = 500\ tf / m^2 \times A = 141.50\ tf$$

$$U = \pi D = \pi \times 0.60 = 1.885\ m$$

$$Ru = 141.50 + 1.885 \times 79.76 = 291.85\ tf / pile$$

Allowable bearing capacity
for PC pile (Dia 600 mm)

Case	Safety factor	Allowable bearing capacity (tf / pile)
Normal	3	97.28
Seismic	2	145.92

Calculation Results

The calculation results are shown as follows.

TABLE OF STABILITY CALCULATION FOR DOWNSTREAM APPROACH WALL (EL+9.000: RIGHT BANK)

Direction		Direction of flowing water				Direction of weir axis			
Case		Normal case	Design Flooding case	Construction case	Seismic case	Normal case	Design Flooding case	Construction case	Seismic case
Quantity of displacement for footing (m)	Horizontal (δ X m)	-	-	-	-	0.0012257	-	0.0011189	0.0013313
	Allowable	0.010	0.010	0.010	0.015	0.010	0.010	0.010	0.015
	Vertical (δ Y m)	-	-	-	-	0.0009999	-	0.0011292	0.0010081
	Allowable	0.015	0.010	0.015	0.015	0.015	0.015	0.015	0.015
Axial force (tf/pile)	No.1	-	-	-	-	91.6753	-	96.1517	109.9850
	No.2	-	-	-	-	62.6543	-	68.7859	67.8478
	No.3	-	-	-	-	33.6332	-	41.4200	25.7106
	No.4	-	-	-	-	4.6122	-	14.0541	-16.4267
	No.5	-	-	-	-	-	-	-	-
	No.6	-	-	-	-	-	-	-	-
	No.7	-	-	-	-	-	-	-	-
	No.8	-	-	-	-	-	-	-	-
	No.9	-	-	-	-	-	-	-	-
Allowable bearing capacity (tf/pile)		-	-	-	-	97.28	-	97.28	145.92
Shearing stress (tf)		-	-	-	-	11.4771	-	10.3562	21.3287
Bending moment (tf-m/pile)		-	-	-	-	7.0140	-	6.1765	9.9306
Allowable bending moment (tf-m/pile)		-	-	-	-	7.44	-	8.42	10.51

Number of piles: n = 36 piles

Pile head condition: Fixing

Pile condition

1. Diameter: Dia.600 mm
2. Geometrical moment of area: $I = 0.00522000\ m^4$
3. Section area of pile $A = 0.167800\ m^2$

3) Stress-Strain Calculation

(i) Wall section

Stress-strain calculations of the structure are made to decide proper reinforcing bar arrangement. Described below are the bar arrangement for the center pier. Deformed steel bars are used for all parts of structure, and bar spacing will be 125 mm or 250 mm.

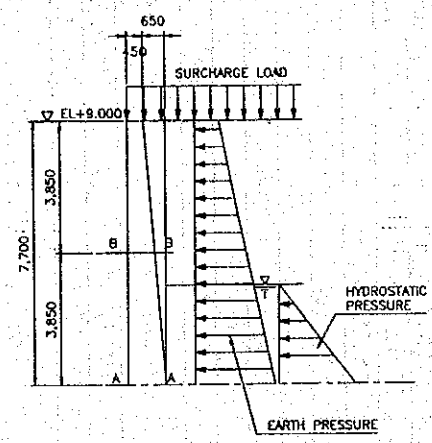

Position of A - A
(Normal Condition)

	H (tf)	Y (m)	My (tf-m)	Remark
Earth pressure-1	8.173	4.518	36.924	(Aerial)
Earth pressure-2	6.955	1.211	8.426	(Underwater)
Hydrostatic pressure-1	3.645	0.900	3.281	(Active side)
Hydrostatic pressure-2	-0.020	0.067	-0.001	(Passive side)
Total	18.752		48.629	

B = 100.00 cm
H = 110.00 cm
Bending moment = 48.629 tf-m / m
Shearing force = 18.752 tf /m

(Seismic Condition)

	H (tf)	Y (m)	My (tf-m)	Remark
Earth pressure-1	9.578	4.450	42.620	(Aerial)
Earth pressure-2	11.304	1.218	13.763	(Underwater)
Hydrostatic pressure-1	3.645	0.900	3.281	(Active side)
Hydrostatic pressure-2	-0.020	0.067	-0.001	(Passive side)
Hydrodynamic force	0.189	1.080	0.204	
Seismic force	10.585	4.191	44.366	
Total	35.280		104.232	

B = 100.00 cm
H = 110.00 cm
Bending moment = 104.232 tf-m / m
Shearing force = 35.280 tf /m

Position of B - B
(Normal Condition)

	H (tf)	Y (m)	My (tf-m)	Remark
Earth pressure-1	5.108	1.818	9.288	(Aerial)
Total	5.108		9.288	

B = 100.00 cm
H = 77.50 cm
Bending moment = 9.288 tf-m / m
Shearing force = 5.108 tf /m

(Seismic Condition)

	H (tf)	Y (m)	My (tf-m)	Remark
Earth pressure-1	5.848	1.364	7.978	(Aerial)
Seismic force	0.707	1.755	1.241	
Total	6.556		9.220	

B = 100.00 cm
H = 77.50 cm
Bending moment = 9.220 tf-m / m
Shearing force = 6.556 tf /m

Results of strength calculation are shown as follows.

		Section A - A		Section B - B	
Case		Normal	Seismic	Normal	Seismic
Member of shape		Rectangle	Rectangle	Rectangle	Rectangle
M	tf-m	48.63	104.23	9.29	9.22
N	tf	0.00	0.00	0.00	0.00
S	tf	18.75	35.28	5.11	6.56
B	cm	100.00	100.00	100.00	100.00
D	cm	101.00	101.00	68.50	68.50
Ac	cm^2	10100.00	10100.00	6850.00	6850.00
As	cm^2	D29-125 = 52.88	D29-125 = 52.88	D29-250 = 26.44	D29-250 = 26.44
P=As/(B×D)		0.00524	0.00524	0.00386	0.00386
N=Es/Ec		15	15	15	15
X0	cm	32.90	32.90	19.70	19.70
K=X0/D		0.325	0.325	0.287	0.287
M/(B×D2)	kgf/cm^2	4.767	10.218	1.98	1.965
S/(B×D)	kgf/cm^2	1.856	3.493	0.746	0.958
(C)		6.892	6.892	7.699	7.699
(S)		14.283	14.283	19.101	19.101
(Z)		1.122	1.122	1.106	1.106
σ c	kgf/cm^2	32.90	70.40	15.20	15.10
σ s	kgf/cm^2	1021.00	2189.00	567.00	563.00
τ	kgf/cm^2	1.86	3.49	0.75	0.96
σ ca	kgf/cm^2	75.00	112.50	75.00	112.50
σ sa	kgf/cm^2	1600.00	2400.00	1600.00	2400.00
τ a	kgf/cm^2	3.80	5.70	3.80	5.70

(ii) Footing Section

Loading calculation

W1 (Weight of body) 1.40×2.50 tf/m^3 = 3.500 tf/m^2

W2 (Weight of earth: Aerial) = 9.000 tf/m2

W3 (Weight of earth: Underwater) = 2.700 tf/m2

W4 (Weight of water) = 2.700 tf/m^2

W5 (Surcharge load) = 1.000 tf/m^2

W6 (Uplift) = 4.100 tf/m^2

= 1.600 tf/m^2

Horizontal pressure

<Normal case>

H = 27.545 tf/m (Refer to stability analysis.)

M = 27.545 tf/m×2.937 = 80.900 tf-m/m

N = (0.40 +1.10)×1/2×7.70×2.50 tf/m^3 = 14.919 tf/m

<Seismic case>

H = 51.189 tf/m (Refer to stability analysis)

M = 51.189 tf/m×2.712 = 138.825 tf-m/m

N = 14.919 tf/m

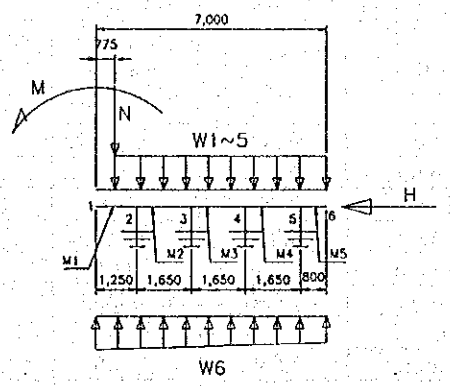

Geometrical moment of inertia

Member	Calculation	Geometrical moment of inertia (m^4)
1~5	$\frac{1}{12}\times 1.00\times 1.40^3$	0.22866

Section area

Member	Calculation	Area (m^2)
1~3	1.00×1.40	1.400

Axial spring constant

$$Kv = a\frac{Ap\times Ep}{L}$$

$a = 0.013\times(L/D)+0.61$ (for prestressed concrete pile)

a $= 0.013\times(10.90/0.60)+0.61$ $= 0.846166$
Ap $= 0.1678\ m^2$
Ep $= 4.0\times 10^6\ tf/m^2$
Kv $= 52105.19\ tf/m$
Kh $= 1/3\times Kv$ $= 17368.40\ tf/m$

Summary of calculation results is shown as follows.

(Normal case: Top of footing)

Member	Condition	Distance (m)	Bending moment M (tf –m)	Shearing stress S (tf)	Axial Force N (tf)
M1	Maximum	0.000	0.000	0.000	0.000
	Minimum	1.250	-60.825	-25.663	18.752
M2	Maximum	1.256	-47.776	0.000	14.055
	Minimum	0.000	-60.825	20.615	14.055
M3	Maximum	1.650	-24.754	1.629	9.366
	Minimum	0.000	-49.046	27.979	9.366
M4	Maximum	1.617	-4.758	0.000	4.682
	Minimum	0.000	-24.754	24.883	4.682
M5	Maximum	0.800	0.000	0.000	0.000
	Minimum	0.000	-4.766	11.954	0.000

(Normal case: Bottom of footing)

Member	Condition	Distance (m)	Bending moment M (tf –m)	Shearing stress S (tf)	Axial Force N (tf)
M1	Maximum	0.000	0.000	0.000	0.000
	Minimum	1.250	-5.110	-10.744	0.000
M2	Maximum	0.895	1.555	0.000	0.000
	Minimum	0.000	-5.110	14.679	0.000
M3	Maximum	0.807	2.113	0.000	0.000
	Minimum	1.650	-3.523	-13.335	0.000
M4	Maximum	0.773	1.110	0.000	0.000
	Minimum	1.650	-4.766	-13.361	0.000
M5	Maximum	0.800	0.000	0.000	0.000
	Minimum	0.000	-4.766	11.954	0.000

(Seismic case: Top of footing)

Member	Condition	Distance (m)	Bending moment M (tf –m)	Shearing stress S (tf)	Axial Force N (tf)
M1	Maximum	0.000	0.000	0.000	0.000
	Minimum	1.250	-116.268	-25.263	35.280
M2	Maximum	1.650	-87.425	4.317	26.444
	Minimum	0.000	-116.268	30.545	26.444
M3	Maximum	1.650	-40.946	15.488	17.621
	Minimum	0.000	-87.425	41.013	17.621
M4	Maximum	1.650	-4.606	9.828	8.808
	Minimum	0.000	-40.946	34.381	8.808
M5	Maximum	0.800	0.000	0.000	0.000
	Minimum	0.000	-4.606	11.554	0.000

(Seismic case: Bottom of footing)

Member	Condition	Distance (m)	Bending moment M (tf –m)	Shearing stress S (tf)	Axial Force N (tf)
M1	Maximum	0.000	0.000	0.000	0.000
	Minimum	1.250	-4.950	-10.344	0.000
M2	Maximum	0.897	1.541	0.000	0.000
	Minimum	0.000	-4.950	14.260	0.000
M3	Maximum	0.807	2.092	0.000	0.000
	Minimum	1.650	-3.374	-12.922	0.000
M4	Maximum	0.772	1.095	0.000	0.000
	Minimum	1.650	-4.606	-12.942	0.000
M5	Maximum	0.800	0.000	0.000	0.000
	Minimum	0.000	-4.606	11.554	0.000

Results of strength calculation are shown as follows.

		Normal case		Seismic case	
Position		Top Section	Bottom Section	Top Section	Bottom Section
Member of shape		Rectangle	Rectangle	Rectangle	Rectangle
M	tf-m	-60.83	2.11	-116.27	2.09
N	tf	0.00	0.00	0.00	0.00
S	tf	25.66	0.00	30.55	0.00
B	cm	100.00	100.00	100.00	100.00
D	cm	131.00	123.50	131.00	123.50
Ac	cm^2	13100.00	12350.00	13100.00	12350.00
As	cm^2	D29-125 = 52.88	D19-125 = 22.72	D29-125 = 52.88	D19-125 = 22.72
P=As/(B×D)		0.00404	0.00184	0.00404	0.00184
N=Es/Ec		15	15	15	15
X0	cm	38.30	25.80	38.30	25.80
K=X0/D		0.293	0.209	0.293	0.209
M/(B×D2)	kgf/cm^2	3.545	0.138	6.775	0.137
S/(B×D)	kgf/cm^2	1.959	0.000	2.332	0.000
(C)		7.572	10.288	7.572	10.288
(S)		18.301	38.951	18.301	38.951
(Z)		1.108	1.075	1.108	1.075
σ c	kgf/cm^2	26.80	1.40	51.30	1.40
σ s	kgf/cm^2	973.00	81.00	1860.00	80.00
τ	kgf/cm^2	1.96	0.00	2.33	0.00
σ ca	kgf/cm^2	75.00	75.00	112.50	112.50
σ sa	kgf/cm^2	1600.00	1600.00	2400.00	2400.00
τ a	kgf/cm^2	3.80	3.80	5.70	5.70

(iii) Pile head treatment

a) Vertical bearing pressure for footing concrete

Pnmax = 109.985 tf/pile (in Seismic case)

$$\sigma_{cv} = \frac{P_{N\max}}{\pi D^2/4} = \frac{109985}{\pi/4 \times 60^2} = 38.90 \text{ kgf/cm}^2$$

$\leqq \sigma$ ca = 60.0 × 1.5 = 90.0 kgf/cm² ..... O.K

b) Punching shear stress for footing concrete

$$\tau_V = \frac{P_{N\max}}{\pi(D+h)h} = \frac{109985}{\pi(60+130)\times 130} = 1.42 \text{ kgf/cm}^2$$

$\leqq \tau$ ca3 = 8.8 kgf/cm² ..... O.K

where

h : Height of between top of footing and pile head (cm)

c) Horizontal bearing pressure for footing concrete

$$\sigma_{ch} = \frac{H}{D\ell}$$

where

l : Stuffing length of pile (cm)
D : Pile diameter (cm)
H : Shearing pressure (kgf)

$P_N$max = 109.99 tf/pile (in Seismic case)
M = 9.93 tf-m
S = 21.33 tf

$$\sigma_{ch} = \frac{21330}{60 \times 10} = 35.55 \text{ kgf/cm}^2 \leqq \sigma \text{ ca} = 60.0 \times 1.5 = 90.0 \text{ kgf/cm}^2$$

.....O.K

d) Vertical punching shearing stress to pile on edge of footing

$$\tau_h = \frac{H}{h'(2\ell + D + 2h')}$$

where

h' : Effective thickness to vertical punching stress on footing (cm)
l : Stuffing length of pile (cm)
D : Pile diameter (cm)
H : Shearing pressure (kgf)

h' = (80-1/2×60) = 50.0 cm

$$\tau_h = \frac{21330}{50.0 \times (2 \times 10 + 60 + 2 \times 50.0)} = 2.37 \text{ kgf/cm}^2$$

≦ τ ca3 = 8.8 kgf/cm² .....O.K

e) Strength of estimated reinforced concrete section

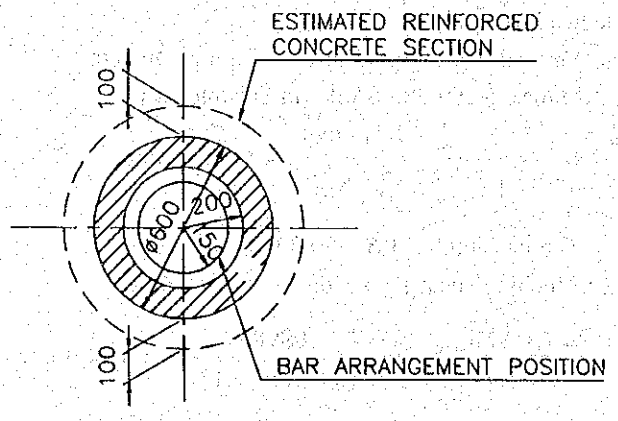

$P_N$min = -16.43 tf/pile (in Seismic case)
M = 9.93 tf-m
S = 21.33 tf
D = 60.00 + 10.00×2 = 80.00cm
a = 20.00 cm×2 = 40.00 cm
d = 25.00 cm

Result of strength calculation is shown as follows.

Member of shape		Circle			
M	tf-m	-9.931	X0	cm	18.40
N	tf	-16.427	K= X0/H		0.23
S	tf	21.329	$M/(B \times H^2)$	kgf/cm^2	1.94
B	cm	80.00	$S/(B \times H)$	kgf/cm^2	3.333
H	cm	80.00	(C)		34.951
D	cm	55.00	(S)		69.490
DD	cm	25.00	(Z)		3.692
DG	cm	25.00	Σc	kgf/cm^2	67.80
B0 , R	cm	40.00	Σs	kgf/cm^2	2022.00
H0 , R0	cm	20.00	τ	kgf/cm^2	0.00
AC	cm^2	3769.90	Σca	kgf/cm^2	112.50
AS , AS1	cm^2	12-D19 = 34.08	Σsa	kgf/cm^2	2400.00
P , P1		0.00904	Ta	kgf/cm^2	5.70
N= ES/EC		15			

f) Reinforcing bar at pile head treatment

Fixing length of reinforcing bar at footing

$$L_1 \geqq L_0$$

Where

L0 : 35 D (mm)

D : Diameter of reinforcing bar (mm)

$L_1 = 35 \times 19 = 665 \fallingdotseq 700$ mm

Fixing length of reinforcing bar at pile

$$L_2 \geqq 50\,\phi + L_0$$

Where

ϕ : Diameter of PC steel bar (mm)

$L_2 = 50 \times 9.0 + 700 = 1150$ mm

g) Depth of concrete filling

Depth of concrete filling is the same fixing length of reinforcing bar at pile.

$L_3 = 1150$ mm