RECONSTRUCTION OF BRIDGE
BRIDGE NO. 16

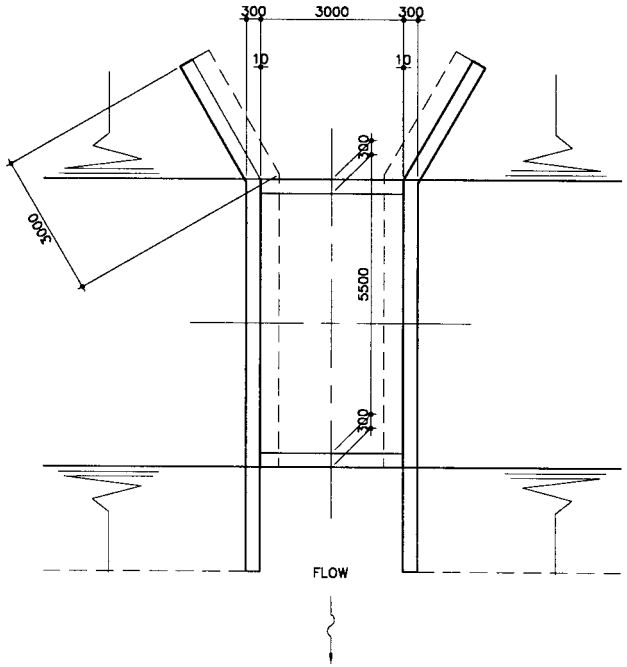

PLAN
SCALE 1:150

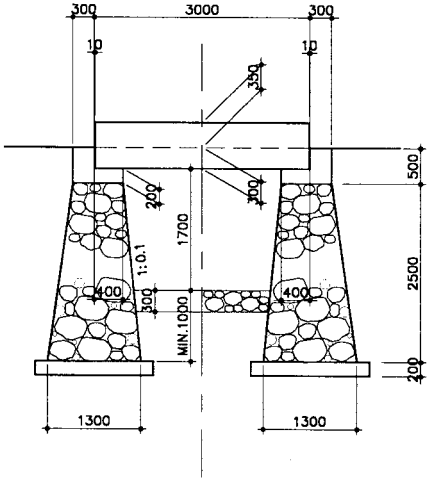

ELEVATION
SCALE 1:100

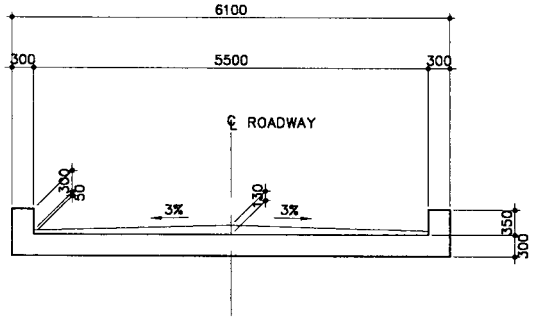

SECTION
SCALE 1:100

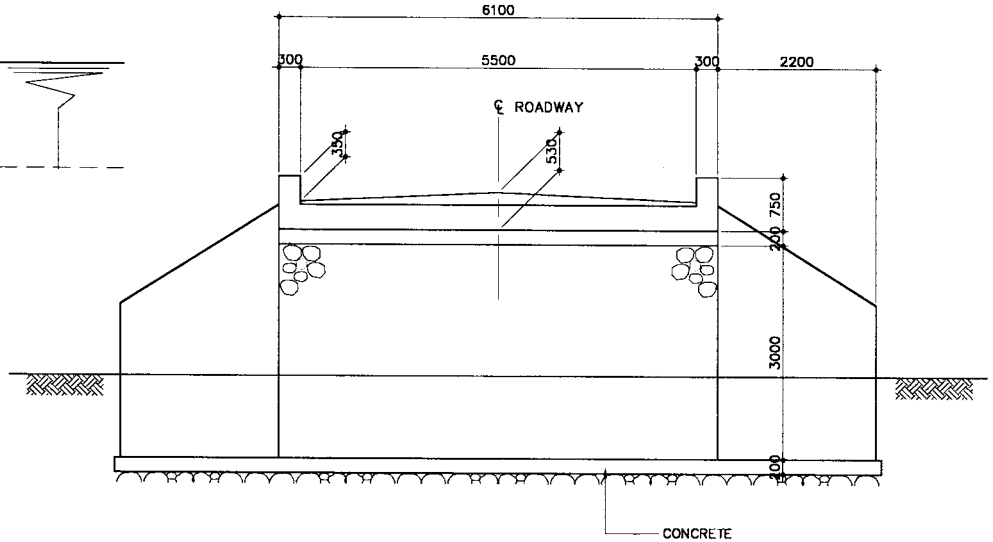

ABUTMENT
SCALE 1:100

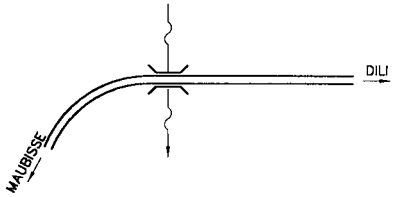

KEY PLAN Km 66.0
NTS

UNITED NATIONS TRANSITIONAL ADMINISTRATION IN EAST TIMOR (UNTAET)	3 YEARS URGENT REHABILITATION WORK (DILI-AILEU-AINARO-CASSA ROAD)	TITLE: RECONSTRUCTION OF BRIDGE (Br. No. 16)	JAPAN INTERNATIONAL COOPERATION AGENCY PACIFIC CONSULTANTS INTERNATIONAL NIPPON KOEI CO., LTD YACHIYO ENGINEERING CO., LTD.
		JULY, 2000 / APP. 3.3.3- DRAWING No. 10	

RECONSTRUCTION OF BRIDGE
BRIDGE NO. 35

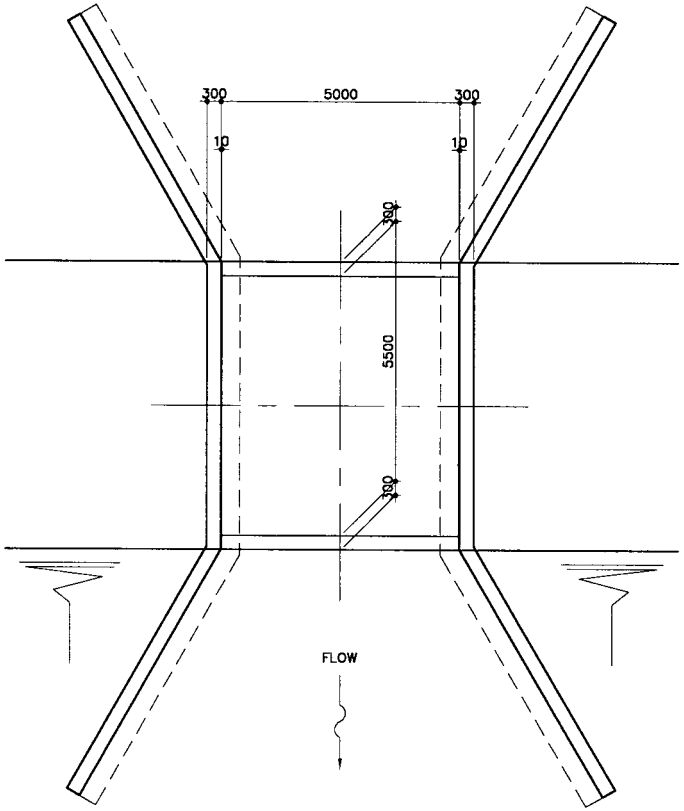

PLAN
SCALE 1:150

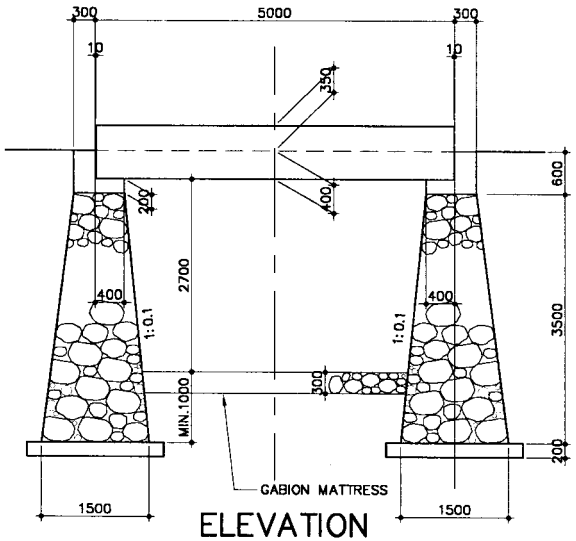

ELEVATION
SCALE 1:100

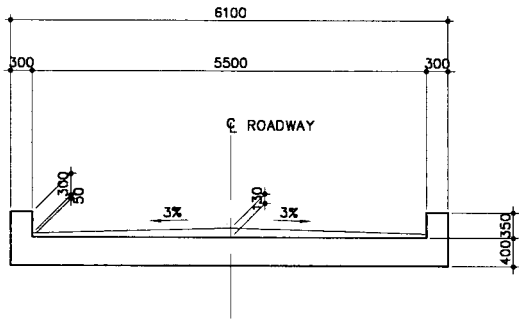

SECTION
SCALE 1:100

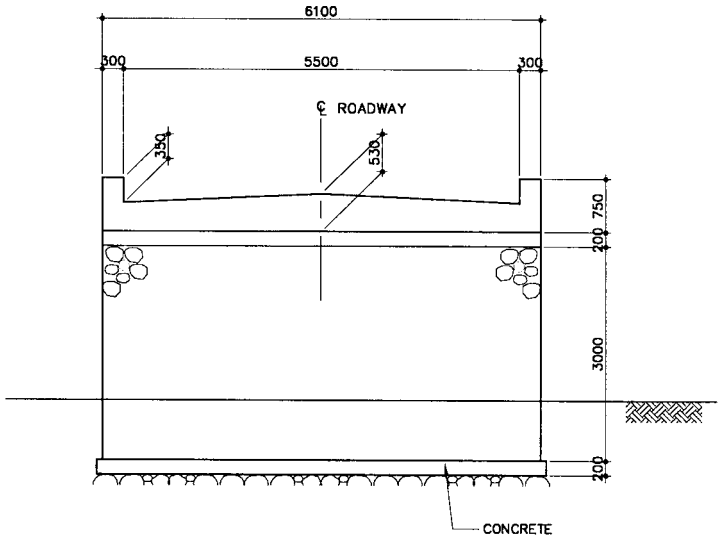

ABUTMENT
SCALE 1:100

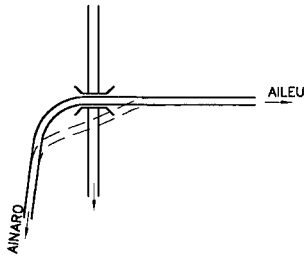

KEY PLAN Km 93.9
NTS

UNITED NATIONS TRANSITIONAL ADMINISTRATION IN EAST TIMOR (UNTAET)	3 YEARS URGENT REHABILITATION WORK (DILI-AILEU-AINARO-CASSA ROAD)	TITLE: RECONSTRUCTION OF BRIDGE (Br. No. 35)	JAPAN INTERNATIONAL COOPERATION AGENCY PACIFIC CONSULTANTS INTERNATIONAL NIPPON KOEI CO., LTD YACHIYO ENGINEERING CO., LTD.
		JULY, 2000 / APP. 3.3.3- DRAWING No. 11	

ABUTMENT PROTECTION
BRIDGE NO. 47

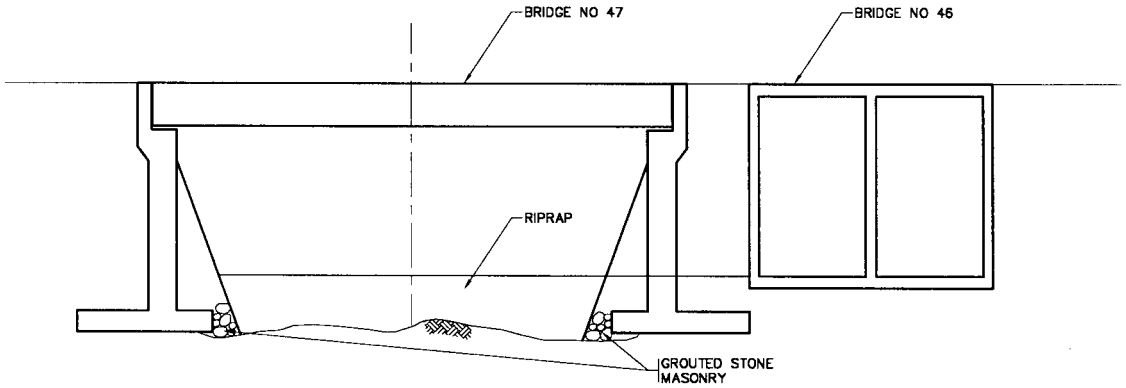

ELEVATION
SCALE 1:300

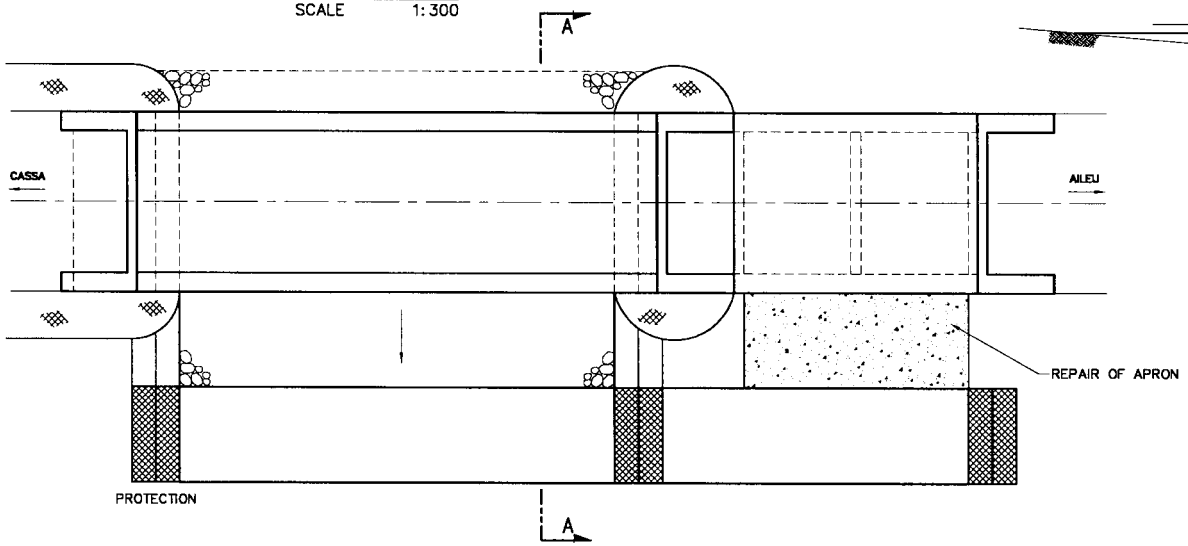

PLAN
SCALE 1:300

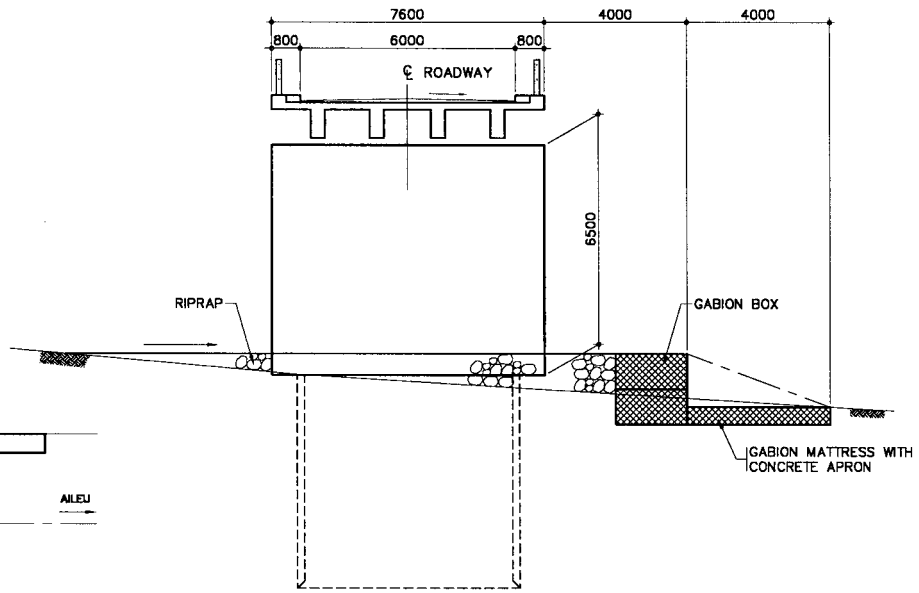

SECTION A–A
SCALE 1:200

UNITED NATIONS TRANSITIONAL ADMINISTRATION IN EAST TIMOR (UNTAET)	3 YEARS URGENT REHABILITATION WORK (DILI-AILEU-AINARO-CASSA ROAD)	TITLE: ABUTMENT PROTECTION (Br. No. 47)		JAPAN INTERNATIONAL COOPERATION AGENCY PACIFIC CONSULTANTS INTERNATIONAL NIPPON KOEI CO., LTD YACHIYO ENGINEERING CO., LTD.
		JULY, 2000	APP. 3.3.3- DRAWING No. 12	

BANK PROTECTION
Km 125+400 - 126+400

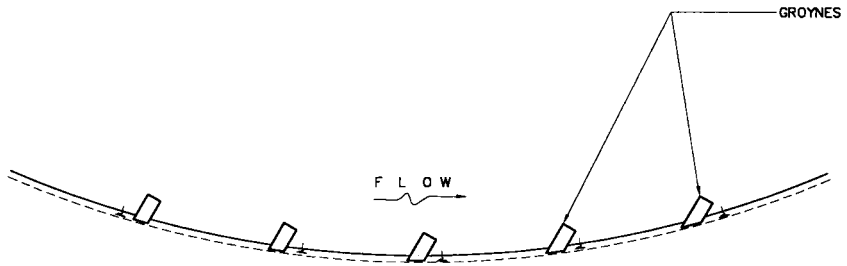

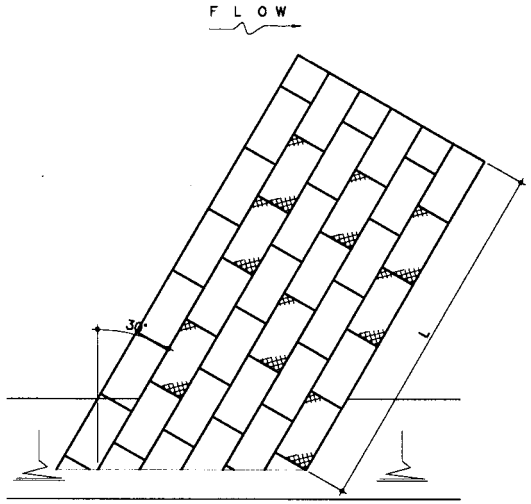

PLAN

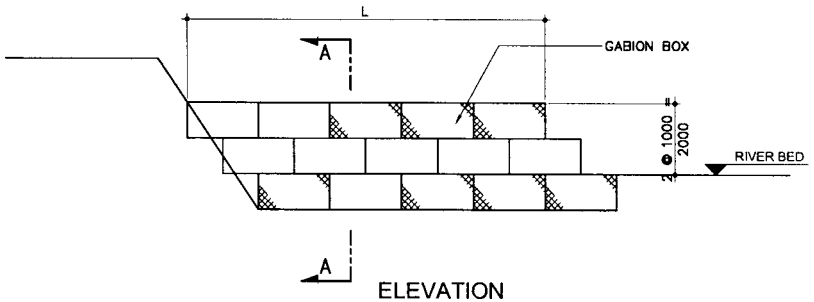

ELEVATION

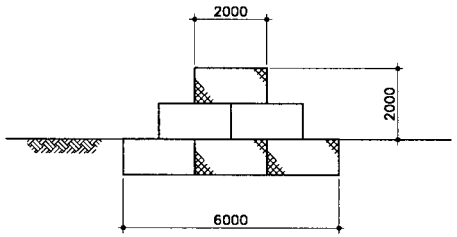

SECTION A-A

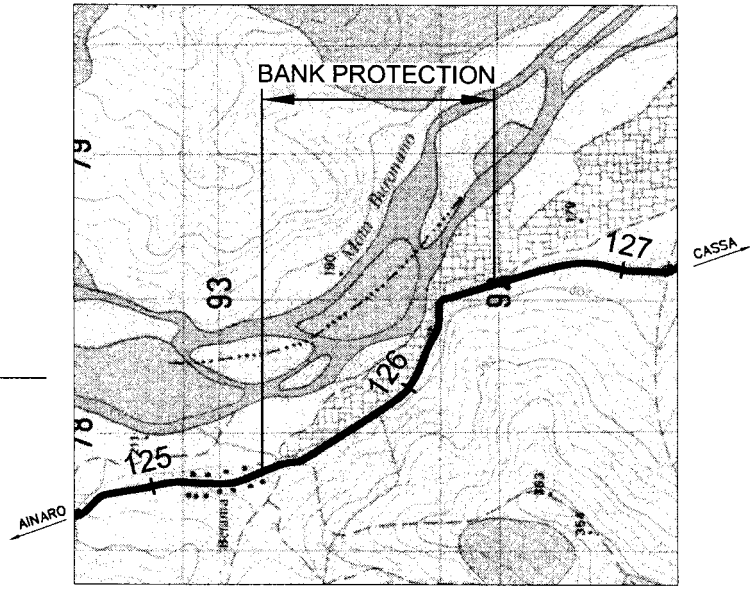

G R O Y N E
SCALE 1:200

UNITED NATIONS TRANSITIONAL ADMINISTRATION IN EAST TIMOR (UNTAET)	3 YEARS URGENT REHABILITATION WORK (DILI-AILEU-AINARO-CASSA ROAD)	TITLE: BANK PROTECTION		JAPAN INTERNATIONAL COOPERATION AGENCY PACIFIC CONSULTANTS INTERNATIONAL NIPPON KOEI CO., LTD YACHIYO ENGINEERING CO., LTD.
		JULY, 2000	APP. 3.3.3- DRAWING No. 13	

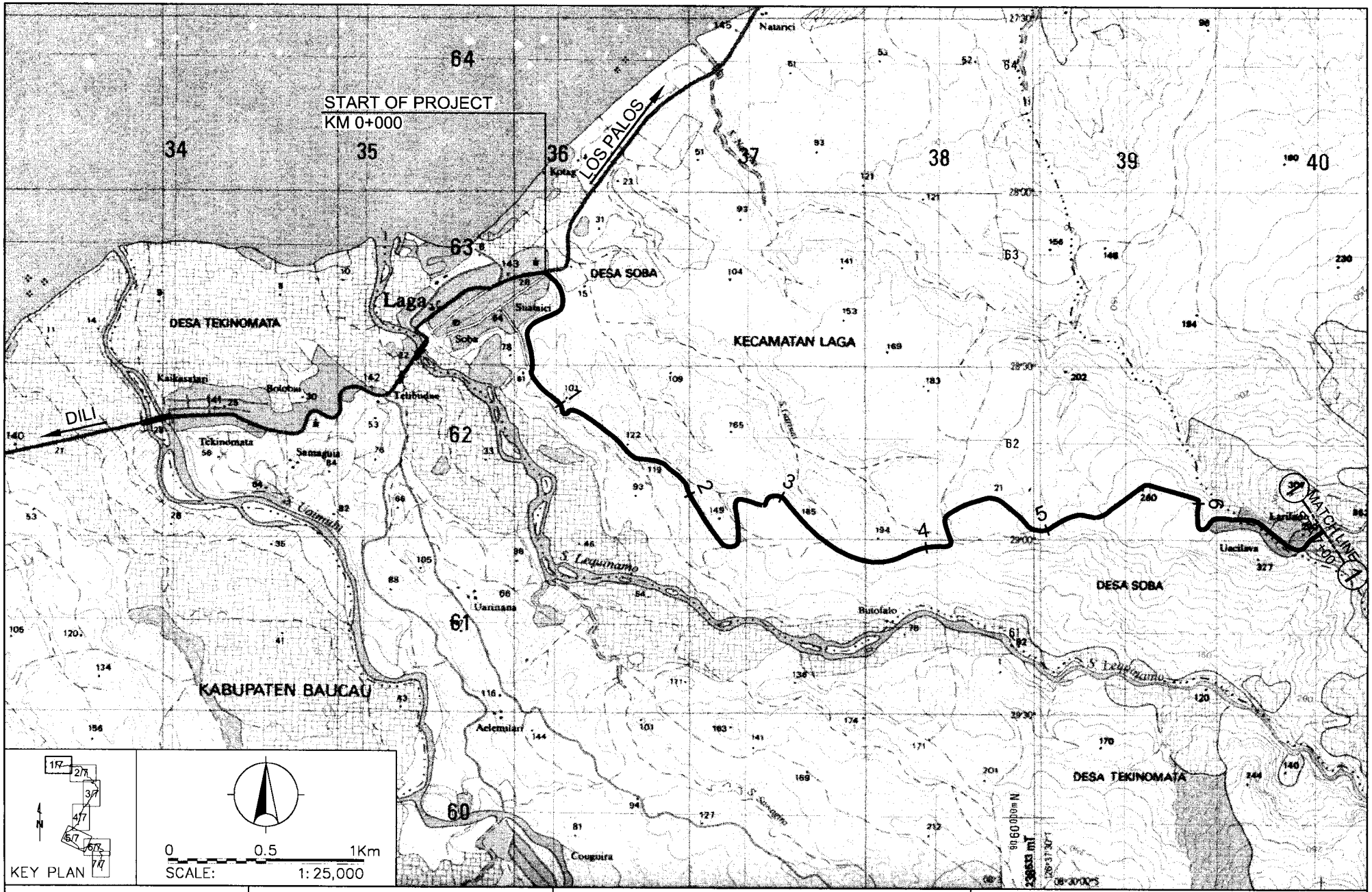

UNITED NATIONS TRANSITIONAL ADMINISTRATION IN EAST TIMOR (UNTAET)	3 YEARS URGENT REHABILITATION WORK (LAGA-BAGUIA-AFALOICAI)	TITLE: PLAN 1/7	JAPAN INTERNATIONAL COOPERATION AGENCY PACIFIC CONSULTANTS INTERNATIONAL NIPPON KOEI CO., LTD YACHIYO ENGINEERING CO., LTD.
		JULY, 2000 / APP. 3.3.3- DRAWING No. 14-01	

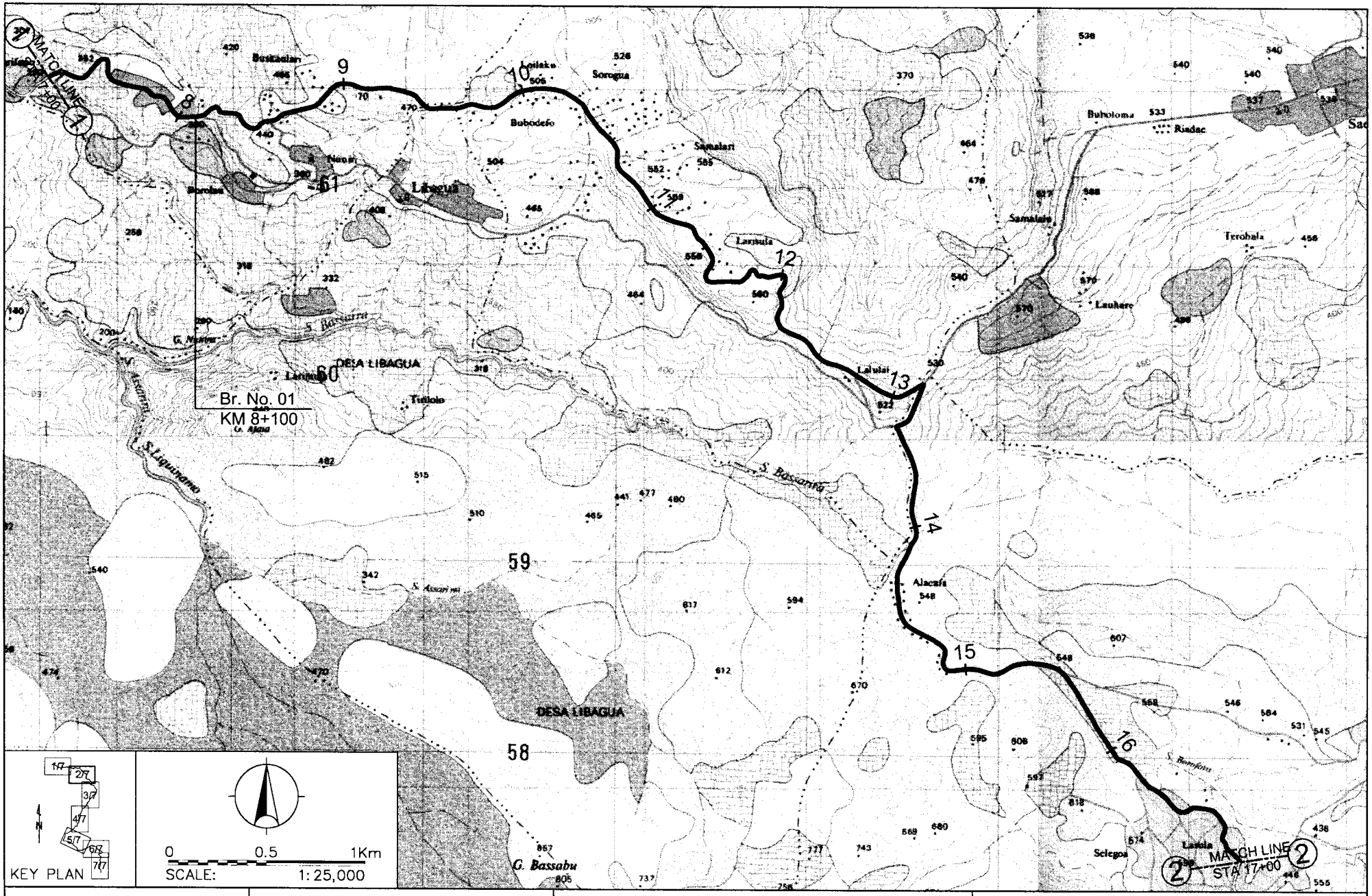

UNITED NATIONS TRANSITIONAL ADMINISTRATION IN EAST TIMOR (UNTAET)	3 YEARS URGENT REHABILITATION WORK (LAGA-BAGUIA-AFALOICAI)	TITLE: PLAN 2/7		JAPAN INTERNATIONAL COOPERATION AGENCY PACIFIC CONSULTANTS INTERNATIONAL NIPPON KOEI CO., LTD YACHIYO ENGINEERING CO., LTD.
		JULY, 2000	APP. 3.3.3- DRAWING No. 14-02	

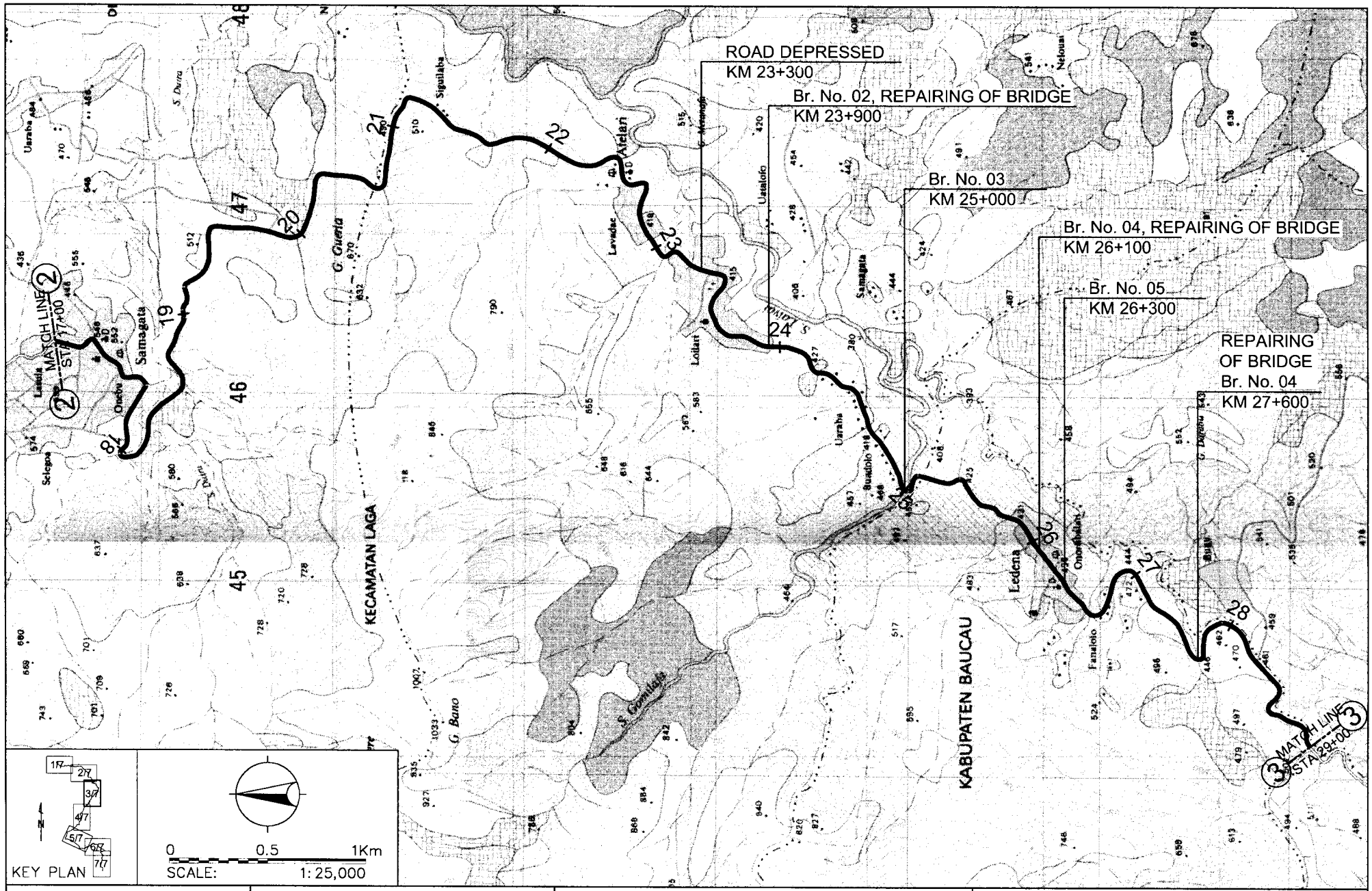

UNITED NATIONS TRANSITIONAL ADMINISTRATION IN EAST TIMOR (UNTAET)	3 YEARS URGENT REHABILITATION WORK (LAGA-BAGUIA-AFALOICAI)	TITLE: PLAN 3/7	JAPAN INTERNATIONAL COOPERATION AGENCY PACIFIC CONSULTANTS INTERNATIONAL NIPPON KOEI CO., LTD YACHIYO ENGINEERING CO., LTD.
		JULY, 2000 / APP. 3.3.3- DRAWING No. 14-03	

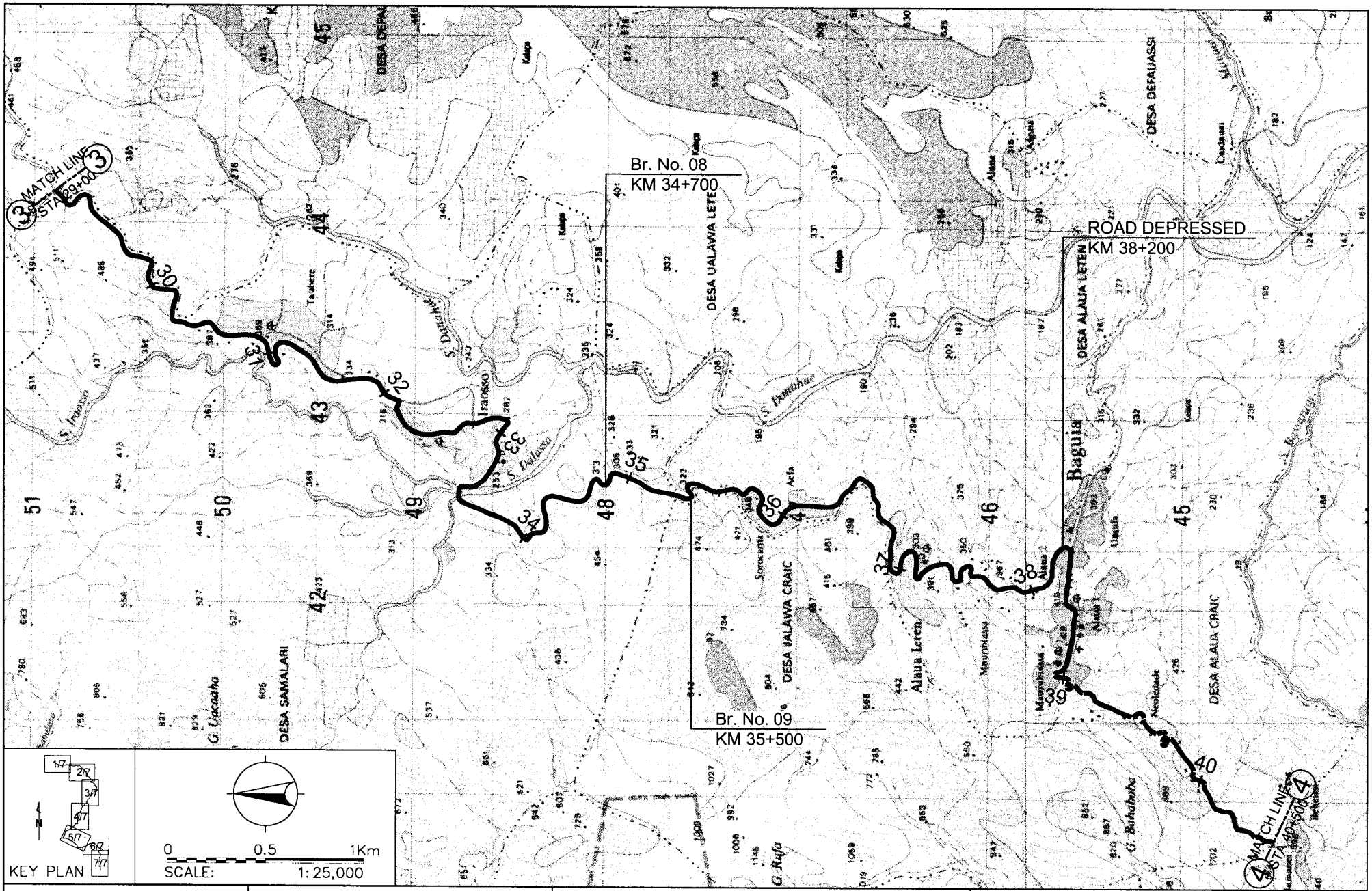

UNITED NATIONS TRANSITIONAL ADMINISTRATION IN EAST TIMOR (UNTAET)	3 YEARS URGENT REHABILITATION WORK (LAGA-BAGUIA-AFALOICAI)	TITLE: PLAN 4/7	JAPAN INTERNATIONAL COOPERATION AGENCY PACIFIC CONSULTANTS INTERNATIONAL NIPPON KOEI CO., LTD YACHIYO ENGINEERING CO., LTD.
		JULY, 2000 / APP. 3.3.3- DRAWING No. 14-04	

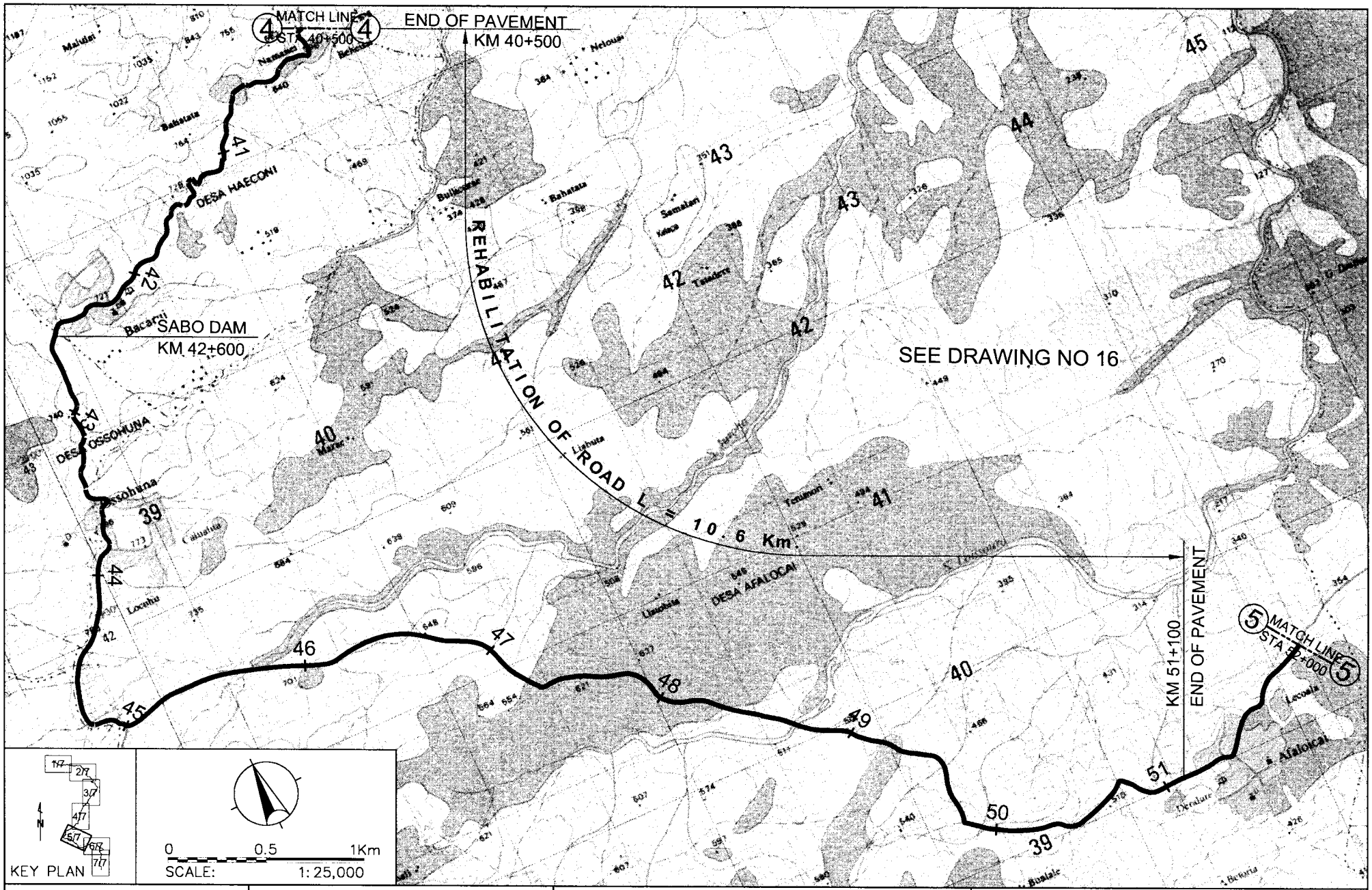

UNITED NATIONS TRANSITIONAL ADMINISTRATION IN EAST TIMOR (UNTAET)	3 YEARS URGENT REHABILITATION WORK (LAGA-BAGUIA-AFALOICAI)	TITLE: PLAN 5/7		JAPAN INTERNATIONAL COOPERATION AGENCY PACIFIC CONSULTANTS INTERNATIONAL NIPPON KOEI CO., LTD YACHIYO ENGINEERING CO., LTD.
		JULY, 2000	APP. 3.3.3- DRAWING No. 14-05	

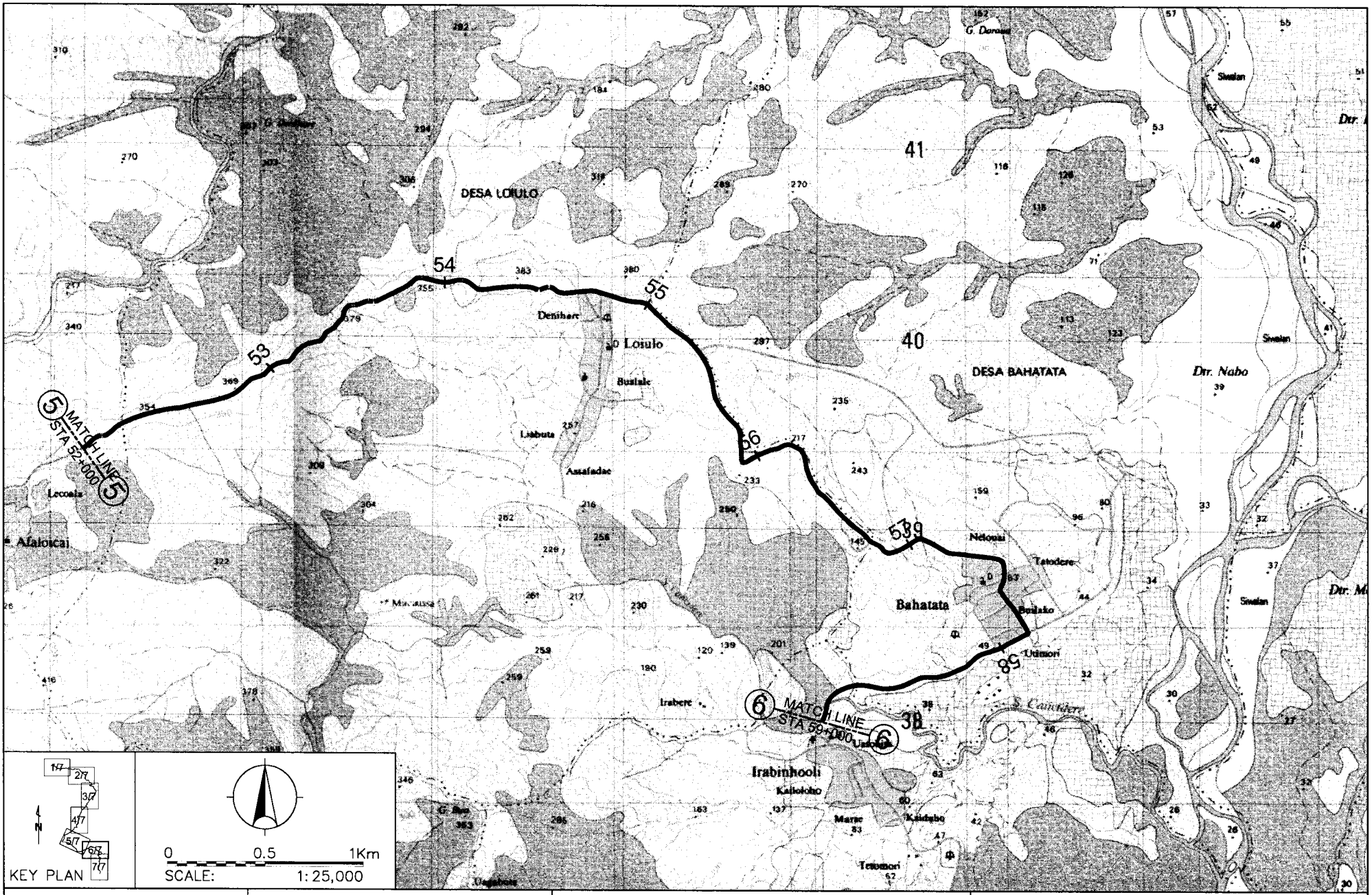

UNITED NATIONS TRANSITIONAL ADMINISTRATION IN EAST TIMOR (UNTAET)	3 YEARS URGENT REHABILITATION WORK (LAGA-BAGUIA-AFALOICAI)	TITLE: PLAN 6/7		JAPAN INTERNATIONAL COOPERATION AGENCY PACIFIC CONSULTANTS INTERNATIONAL NIPPON KOEI CO., LTD YACHIYO ENGINEERING CO., LTD.
		JULY, 2000	APP. 3.3.3- DRAWING No. 14-06	

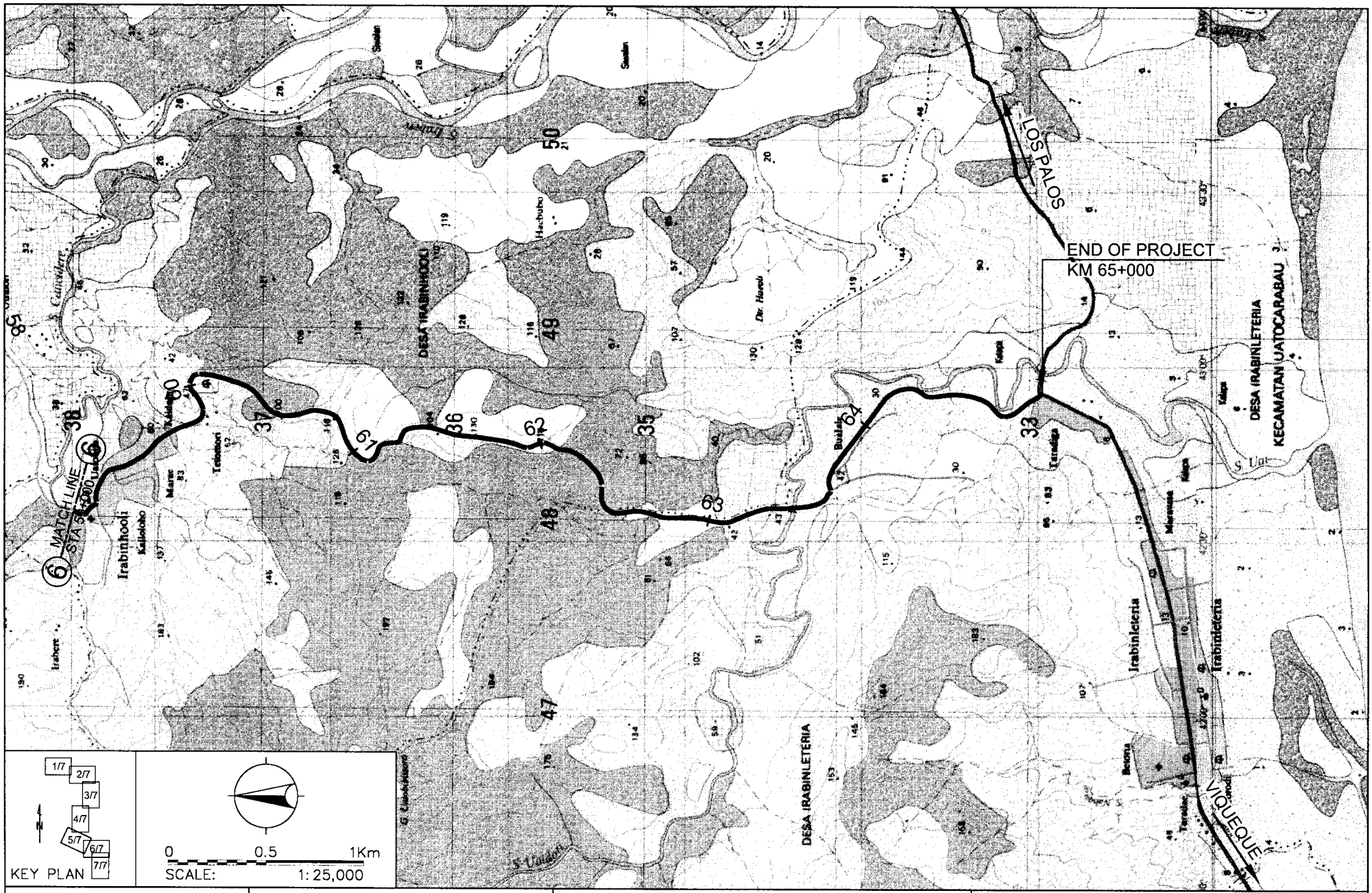

UNITED NATIONS TRANSITIONAL ADMINISTRATION IN EAST TIMOR (UNTAET)	3 YEARS URGENT REHABILITATION WORK (LAGA-BAGUIA-AFALOICAI)	TITLE: PLAN 7/7	JAPAN INTERNATIONAL COOPERATION AGENCY PACIFIC CONSULTANTS INTERNATIONAL NIPPON KOEI CO., LTD YACHIYO ENGINEERING CO., LTD.
		JULY, 2000 / APP. 3.3.3- DRAWING No. 14-07	

ROAD FOR NEW PAVEMENT CONSTRUCTION (Km 40.5-51.1)

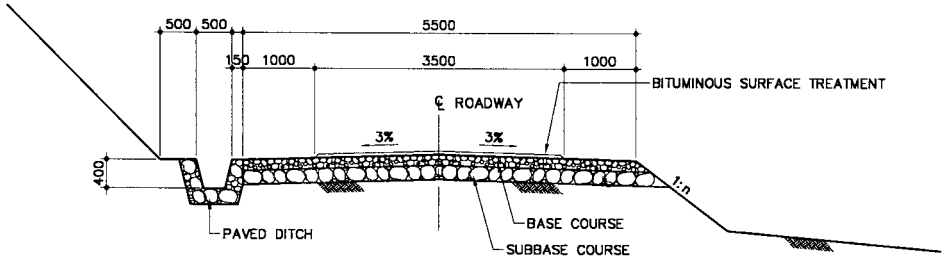

ROAD SECTION

SCALE 1:100

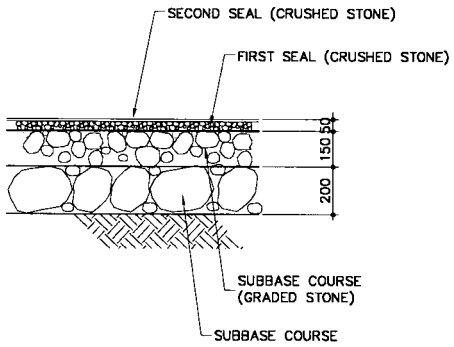

PAVEMENT DETAIL

SCALE 1:30

UNITED NATIONS TRANSITIONAL ADMINISTRATION IN EAST TIMOR (UNTAET)	3 YEARS URGENT REHABILITATION WORK (LAGA-BAGUIA-AFALOICAI)	TITLE: ROAD FOR NEW PAVEMENT CONSTRUCTION (Km 40.5-51.1)		JAPAN INTERNATIONAL COOPERATION AGENCY PACIFIC CONSULTANTS INTERNATIONAL NIPPON KOEI CO., LTD YACHIYO ENGINEERING CO., LTD.
		JULY, 2000	APP. 3.3.3- DRAWING No. 15	

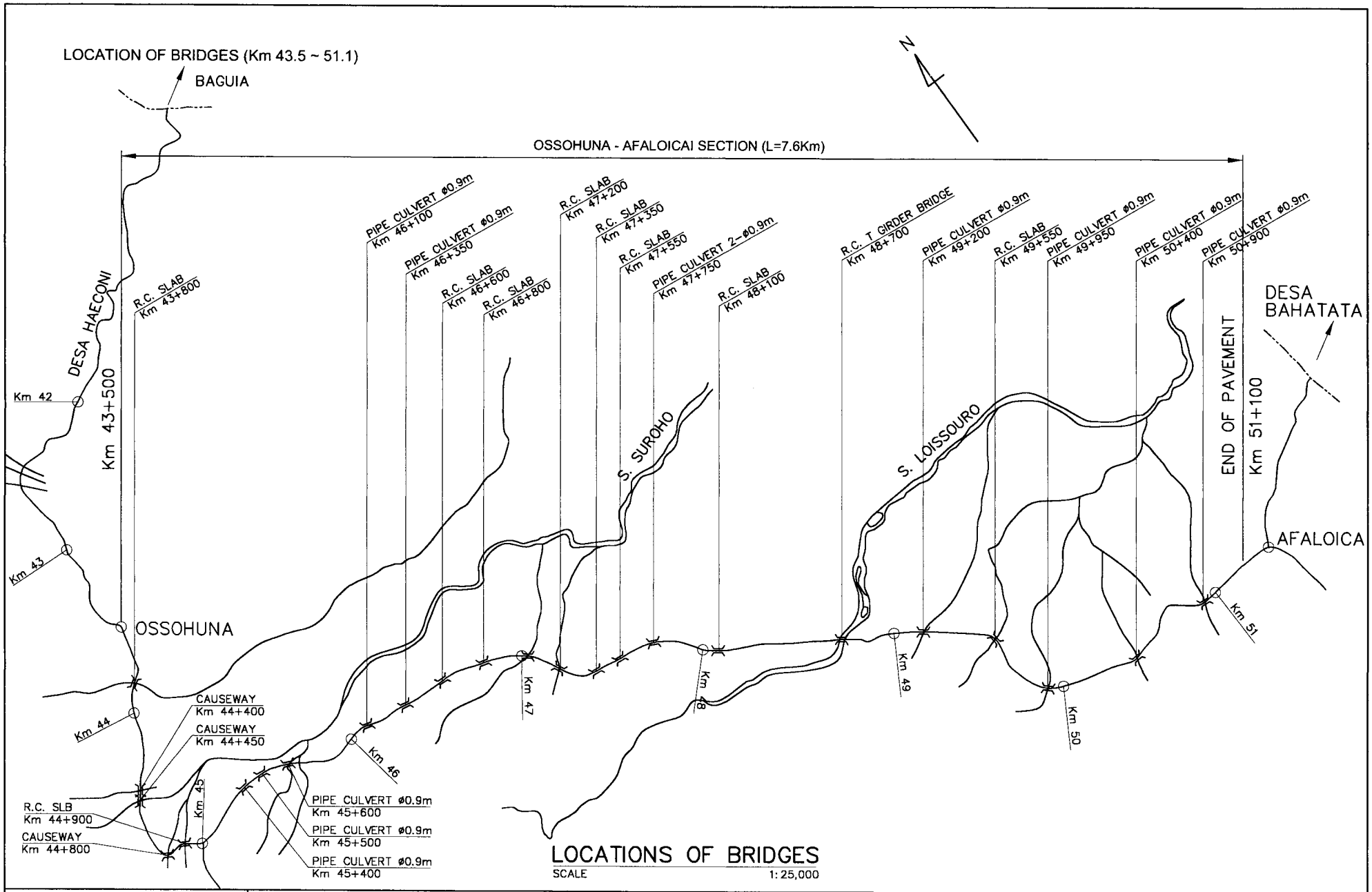

UNITED NATIONS TRANSITIONAL ADMINISTRATION IN EAST TIMOR (UNTAET)	3 YEARS URGENT REHABILITATION WORK (LAGA-BAGUIA-AFALOICAI)	TITLE: LOCATION OF BRIDGES (Km 43.5 ~ 51.1)		JAPAN INTERNATIONAL COOPERATION AGENCY PACIFIC CONSULTANTS INTERNATIONAL NIPPON KOEI CO., LTD YACHIYO ENGINEERING CO., LTD.
		JULY, 2000	APP. 3.3.3- DRAWING No. 16	

RECONSTRUCTION OF BRIDGE (Br. No. 07)

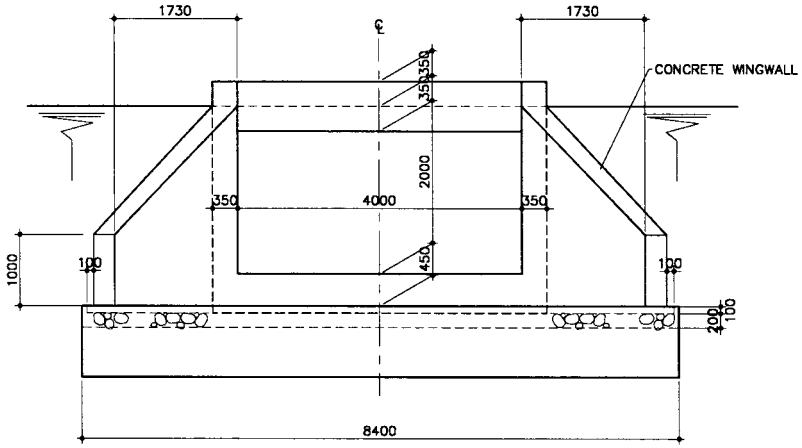

ELEVATION
SCALE 1:100

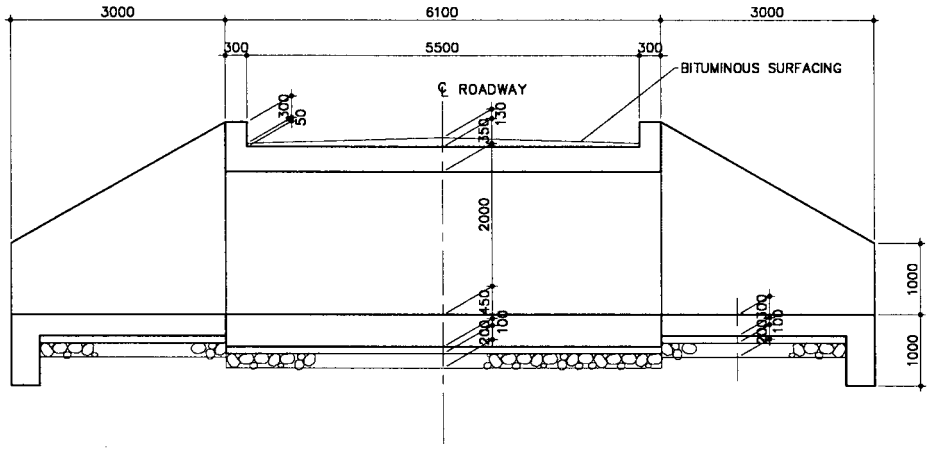

SECTION "A–A"
SCALE 1:100

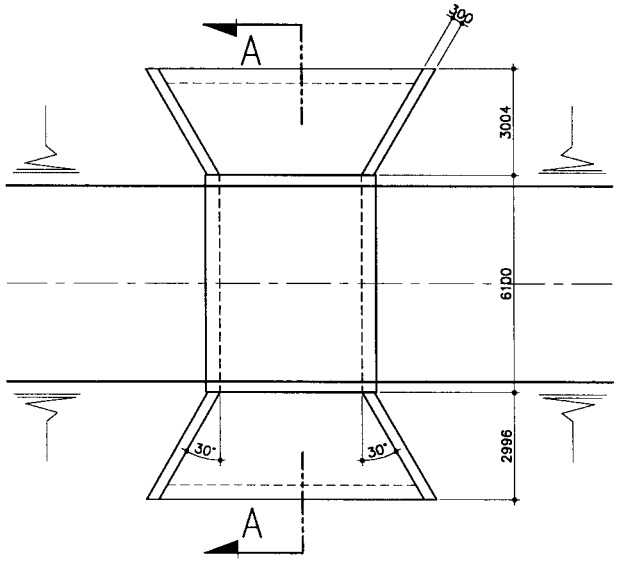

PLAN
SCALE 1:200

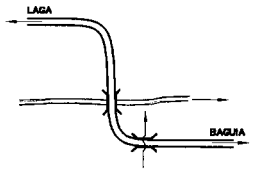

KEY PLAN (Km 33.3)

UNITED NATIONS TRANSITIONAL ADMINISTRATION IN EAST TIMOR (UNTAET)	3 YEARS URGENT REHABILITATION WORK (LAGA-BAGUIA-AFALOICAI)	TITLE: BOX CULVERT (Br. No. 07)		JAPAN INTERNATIONAL COOPERATION AGENCY PACIFIC CONSULTANTS INTERNATIONAL NIPPON KOEI CO., LTD YACHIYO ENGINEERING CO., LTD.
		JULY, 2000	APP. 3.3.3- DRAWING No. 17	

REPAIRING OF BRIDGE (Br. No. 02, 04 & 06)

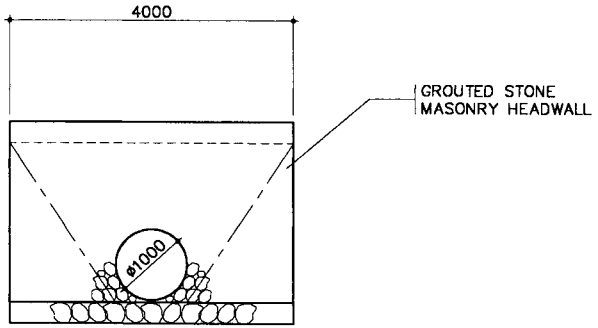

ELEVATION
SCALE 1:100

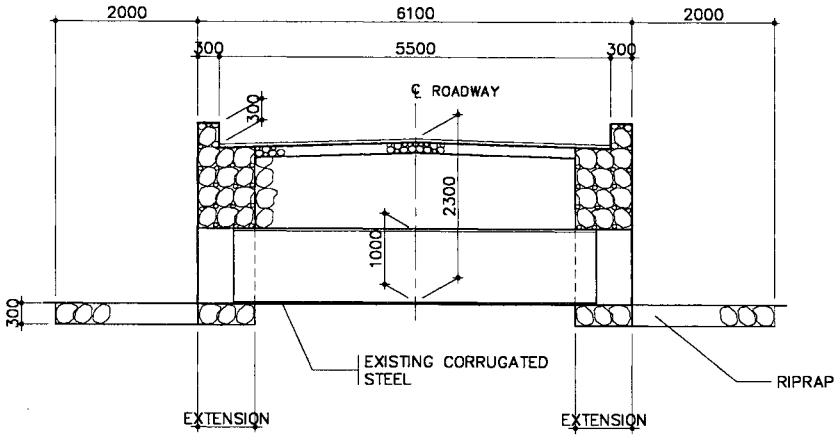

SECTION A–A
SCALE 1:100

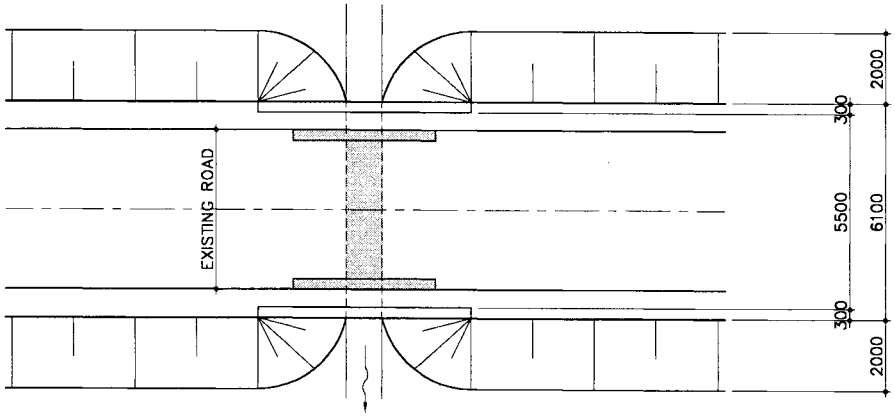

P L A N
SCALE 1:200

UNITED NATIONS TRANSITIONAL ADMINISTRATION IN EAST TIMOR (UNTAET)	3 YEARS URGENT REHABILITATION WORK (LAGA-BAGUIA-AFALOICAI)	TITLE: REPAIRING OF BRIDGE (Br. No. 02, 04 & 06)		JAPAN INTERNATIONAL COOPERATION AGENCY PACIFIC CONSULTANTS INTERNATIONAL NIPPON KOEI CO., LTD YACHIYO ENGINEERING CO., LTD.
		JULY, 2000	APP. 3.3.3- DRAWING No. 18	

CONSTRUCTION OF RC T GIRDER BRIDGE (Km 48.7)

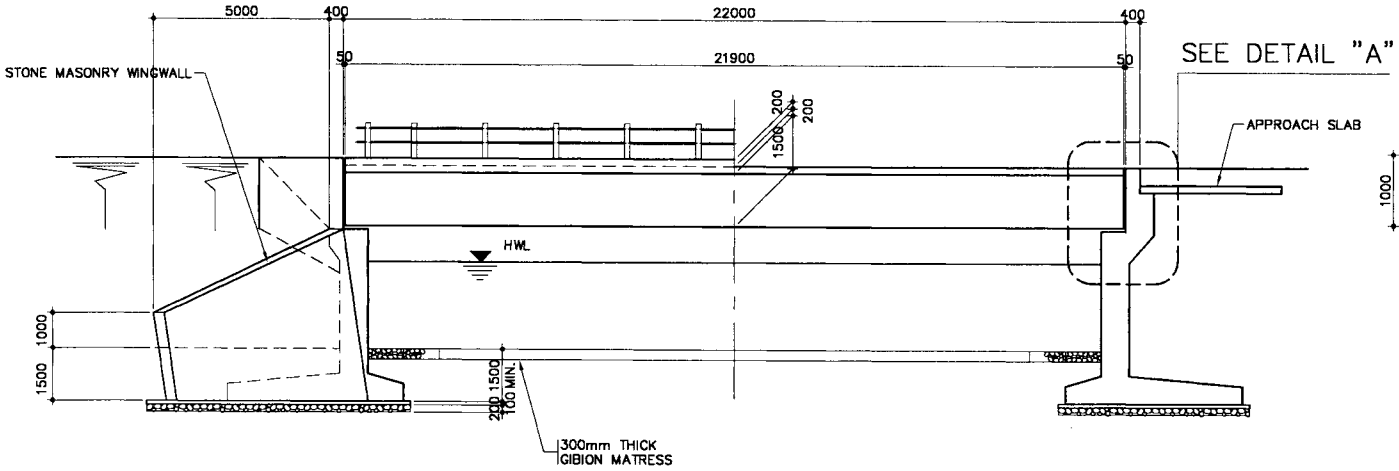

ELEVATION
SCALE 1:200

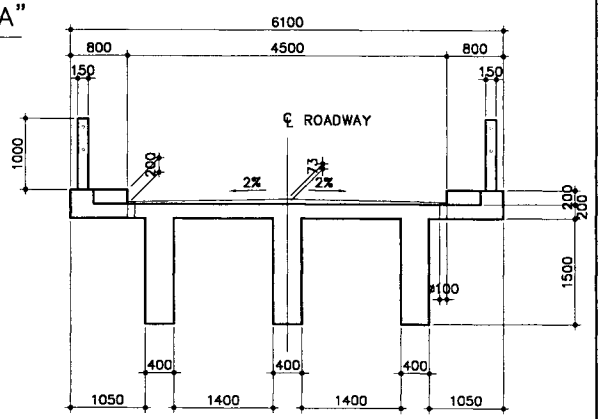

BRIDGE DECK SECTION
SCALE 1:100

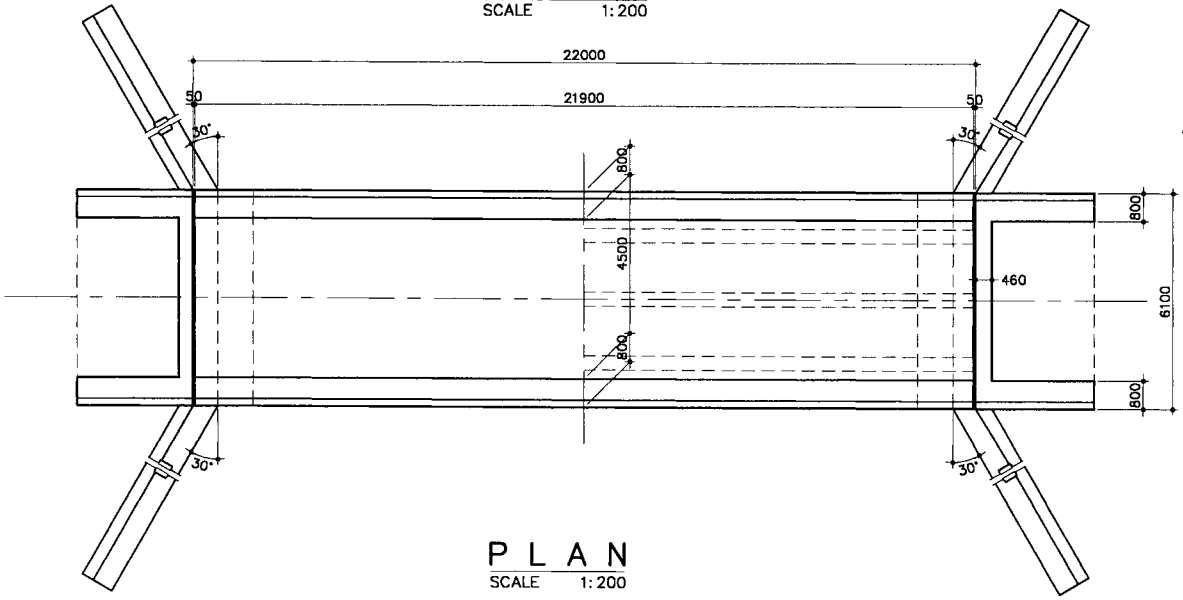

P L A N
SCALE 1:200

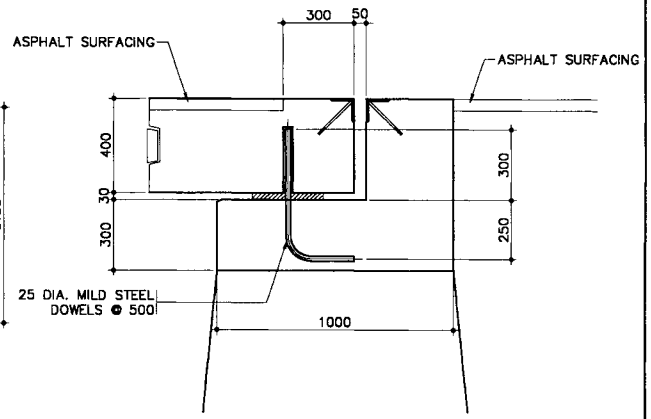

DETAIL "A"
SCALE 1:30

UNITED NATIONS TRANSITIONAL ADMINISTRATION IN EAST TIMOR (UNTAET)	3 YEARS URGENT REHABILITATION WORK (LAGA-BAGUIA-AFALOICAI)	TITLE: CONSTRUCTION OF RC T GIRDER BRIDGE (Km 48.7)		JAPAN INTERNATIONAL COOPERATION AGENCY PACIFIC CONSULTANTS INTERNATIONAL NIPPON KOEI CO., LTD YACHIYO ENGINEERING CO., LTD.
		JULY, 2000	APP. 3.3.3- DRAWING No. 19	

CONSTRUCTION OF RC SLAB BRIDGE

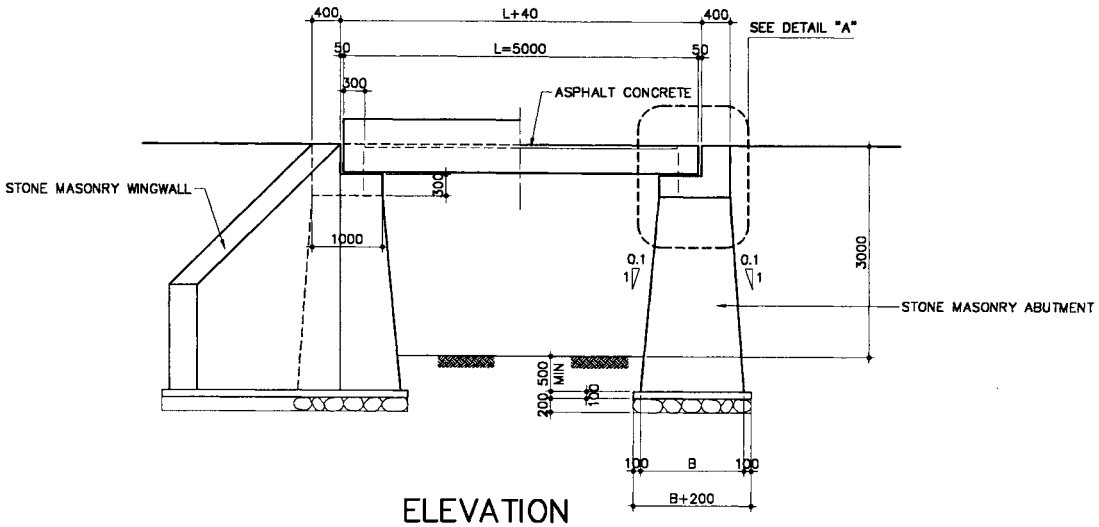

ELEVATION
SCALE 1:100

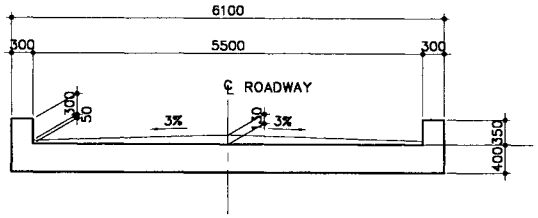

CULVERT SECTION
SCALE 1:100

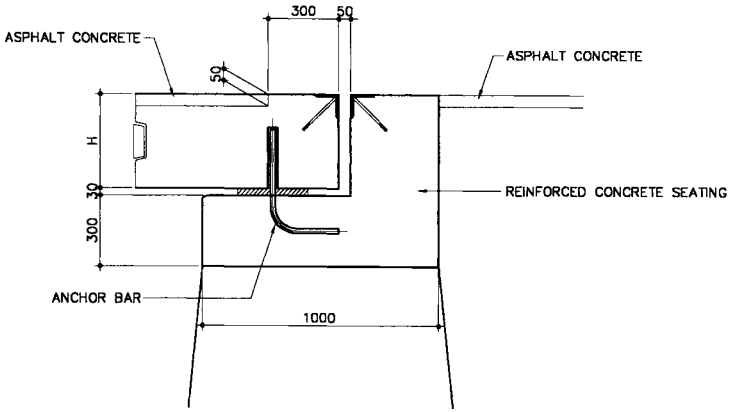

DETAIL "A"
SCALE 1:30

UNITED NATIONS TRANSITIONAL ADMINISTRATION IN EAST TIMOR (UNTAET)	3 YEARS URGENT REHABILITATION WORK (LAGA-BAGUIA-AFALOICAI)	TITLE: CONSTRUCTION OF RC SLAB BRIDGE		JAPAN INTERNATIONAL COOPERATION AGENCY PACIFIC CONSULTANTS INTERNATIONAL NIPPON KOEI CO., LTD YACHIYO ENGINEERING CO., LTD.
		JULY, 2000	APP. 3.3.3- DRAWING No. 20	

CONSTRUCTION OF CAUSEWAY (Km 42.6, 44.5 & 44.75)

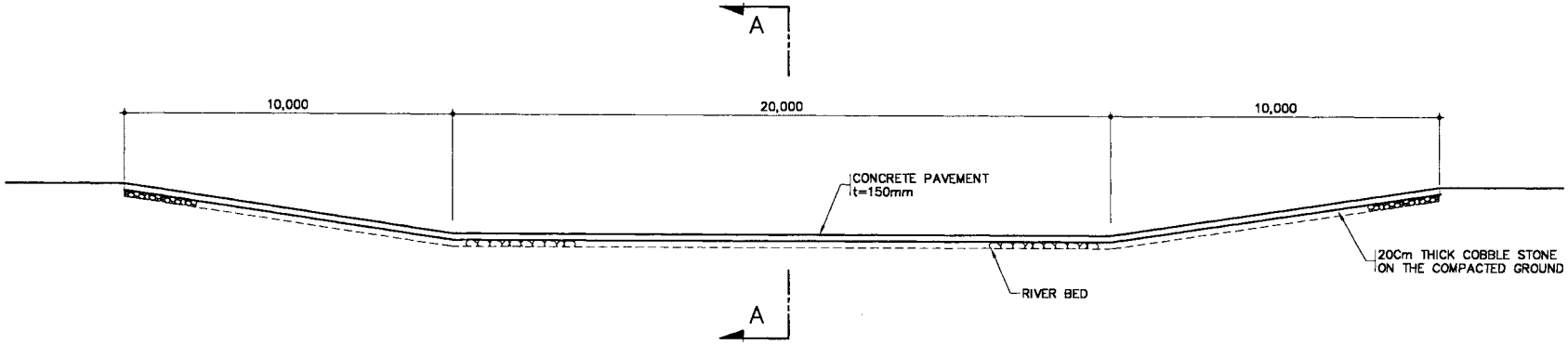

ELEVATION
SCALE 1:200

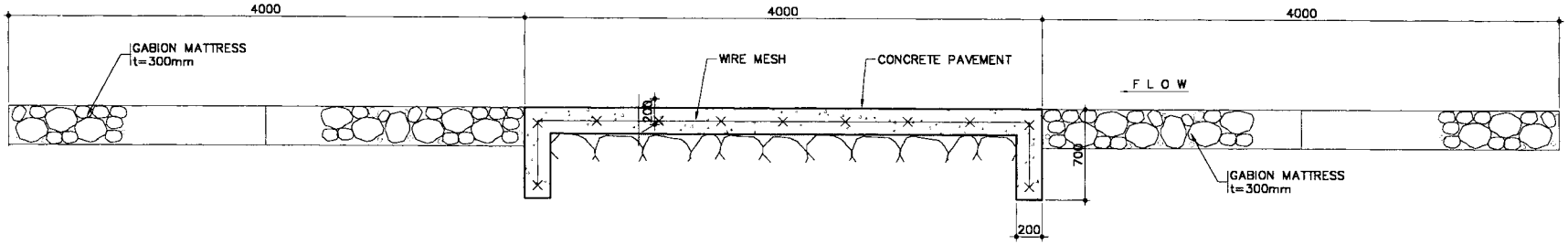

SECTION A–A
SCALE 1:50

UNITED NATIONS TRANSITIONAL ADMINISTRATION IN EAST TIMOR (UNTAET)	3 YEARS URGENT REHABILITATION WORK (LAGA-BAGUIA-AFALOICAI)	TITLE: CONSTRUCTION OF CAUSEWAY (Km 42.6, 44.5 & 44.75)		JAPAN INTERNATIONAL COOPERATION AGENCY PACIFIC CONSULTANTS INTERNATIONAL NIPPON KOEI CO., LTD YACHIYO ENGINEERING CO., LTD.
		JULY, 2000	APP. 3.3.3- DRAWING No. 21	

CONSTRUCTION OF PIPE CULVERT (1-Ø0.90)

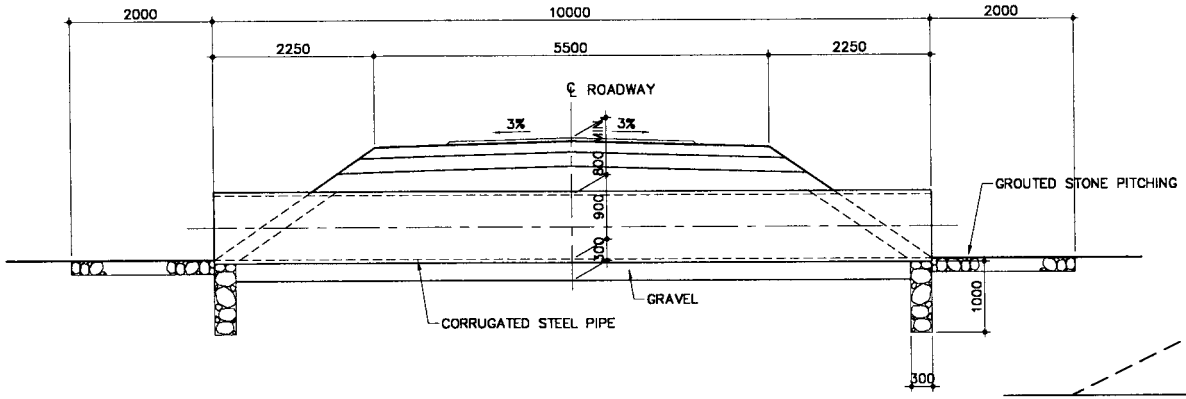

ELEVATION
SCALE 1:100

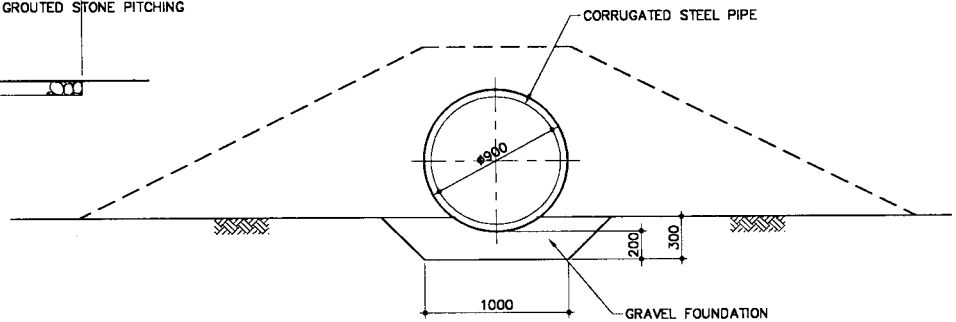

SECTION A–A
SCALE 1:50

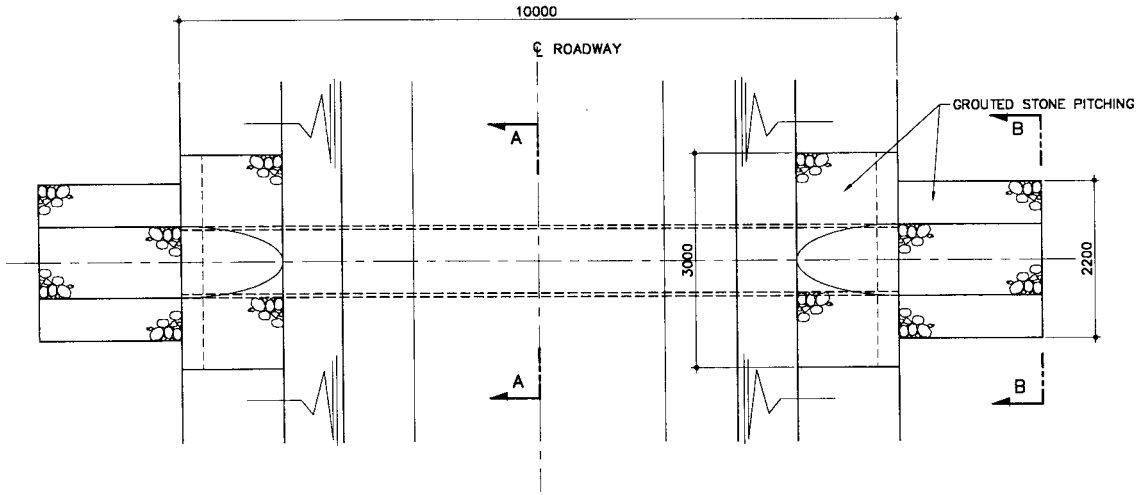

PLAN
SCALE 1:100

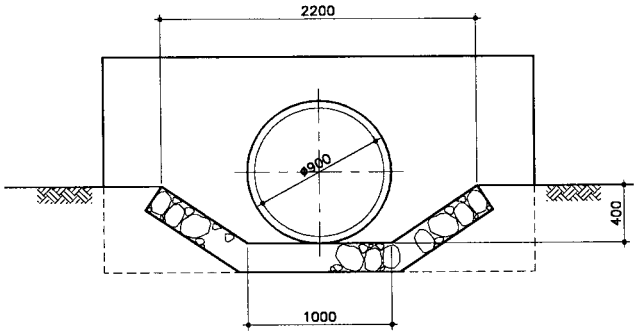

SECTION B–B
SCALE 1:50

UNITED NATIONS TRANSITIONAL ADMINISTRATION IN EAST TIMOR (UNTAET)	3 YEARS URGENT REHABILITATION WORK (LAGA-BAGUIA-AFALOICAI)	TITLE: CONSTRUCTION OF PIPE CULVERT (1-Ø0.90)		JAPAN INTERNATIONAL COOPERATION AGENCY PACIFIC CONSULTANTS INTERNATIONAL NIPPON KOEI CO., LTD YACHIYO ENGINEERING CO., LTD.
		JULY, 2000	APP. 3.3.3- DRAWING No. 22	

CONSTRUCTION OF PIPE CULVERT (2-Ø0.90)

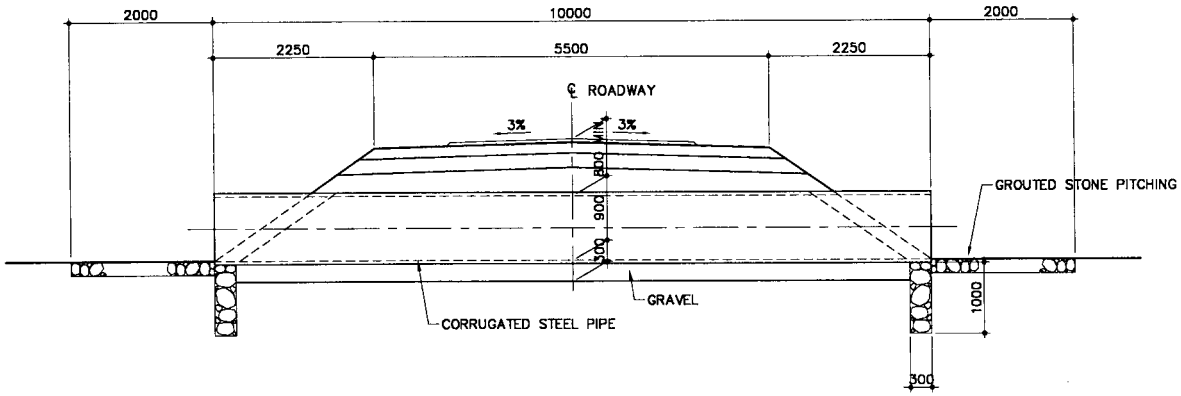

ELEVATION
SCALE 1:100

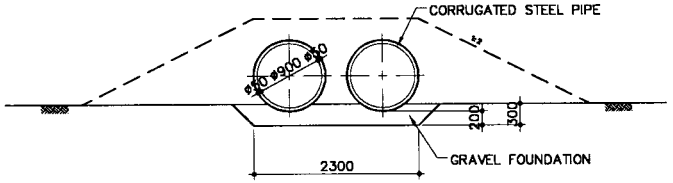

SECTION A–A
SCALE 1:100

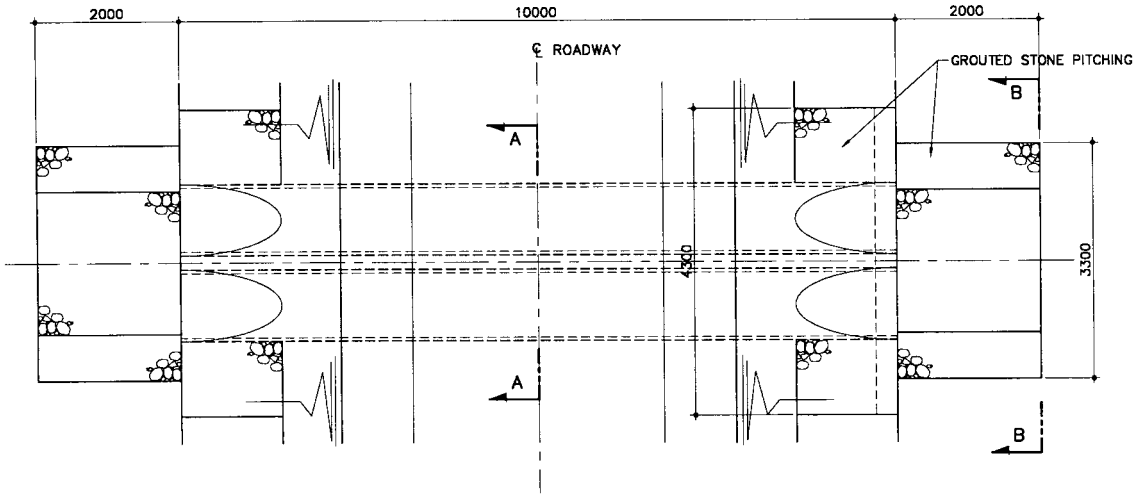

PLAN
SCALE 1:100

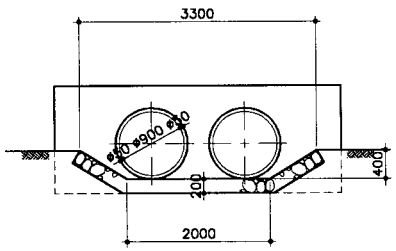

SECTION B–B
SCALE 1:100

UNITED NATIONS TRANSITIONAL ADMINISTRATION IN EAST TIMOR (UNTAET)	3 YEARS URGENT REHABILITATION WORK (LAGA-BAGUIA-AFALOICAI)	TITLE: CONSTRUCTION OF PIPE CULVERT (2-Ø0.90)		JAPAN INTERNATIONAL COOPERATION AGENCY PACIFIC CONSULTANTS INTERNATIONAL NIPPON KOEI CO., LTD YACHIYO ENGINEERING CO., LTD.
		JULY, 2000	APP. 3.3.3- DRAWING No. 23	

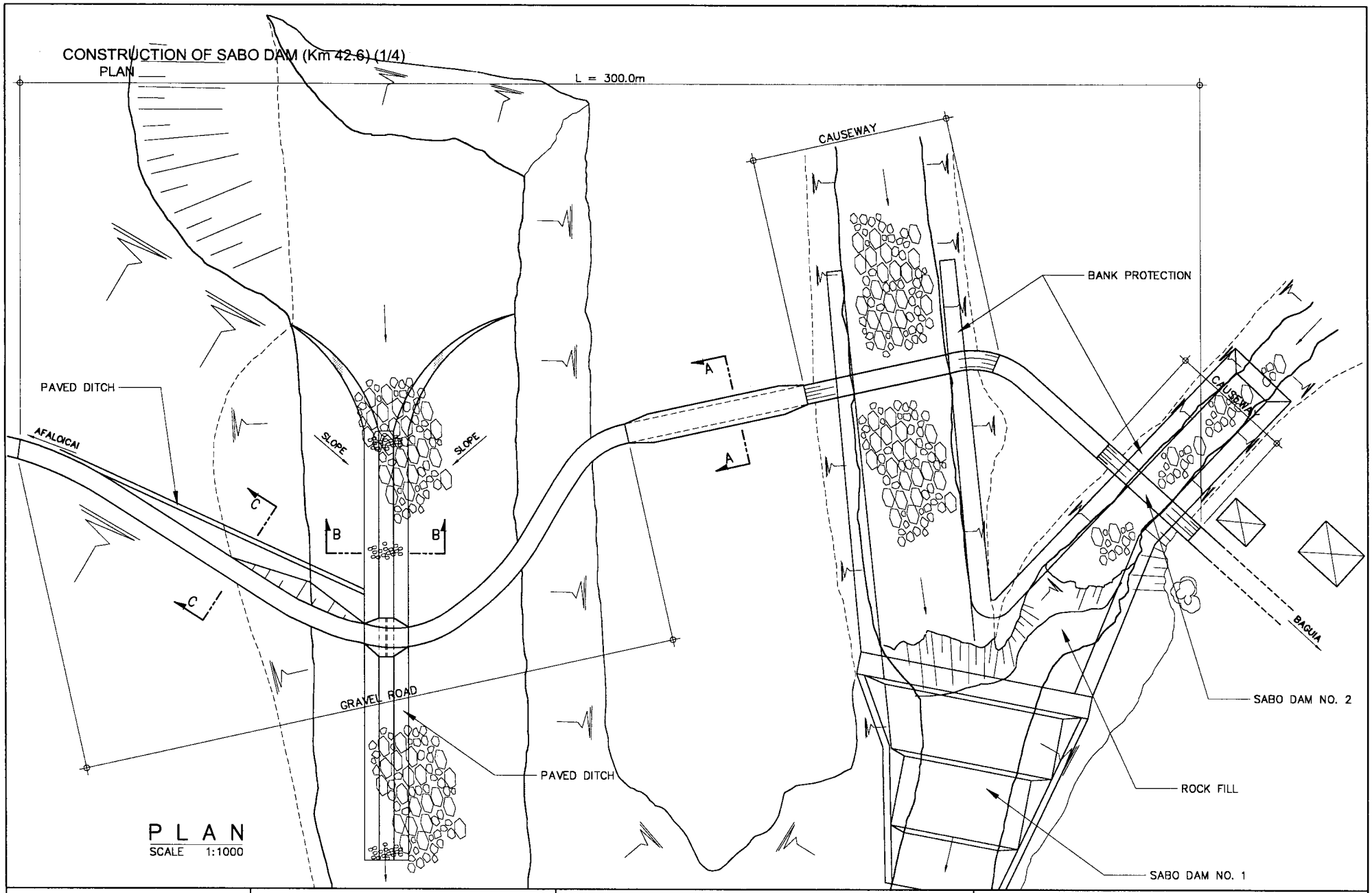

UNITED NATIONS TRANSITIONAL ADMINISTRATION IN EAST TIMOR (UNTAET)	3 YEARS URGENT REHABILITATION WORK (LAGA-BAGUIA-AFALOICAI)	TITLE: CONSTRUCTION OF SABO DAM (Km 42.6)	JAPAN INTERNATIONAL COOPERATION AGENCY PACIFIC CONSULTANTS INTERNATIONAL NIPPON KOEI CO., LTD YACHIYO ENGINEERING CO., LTD.
		JULY, 2000 / APP. 3.3.3- DRAWING No. 24-01	

CONSTRUCTION OF SABO DAM (2/4)
SABO DAM NO.1

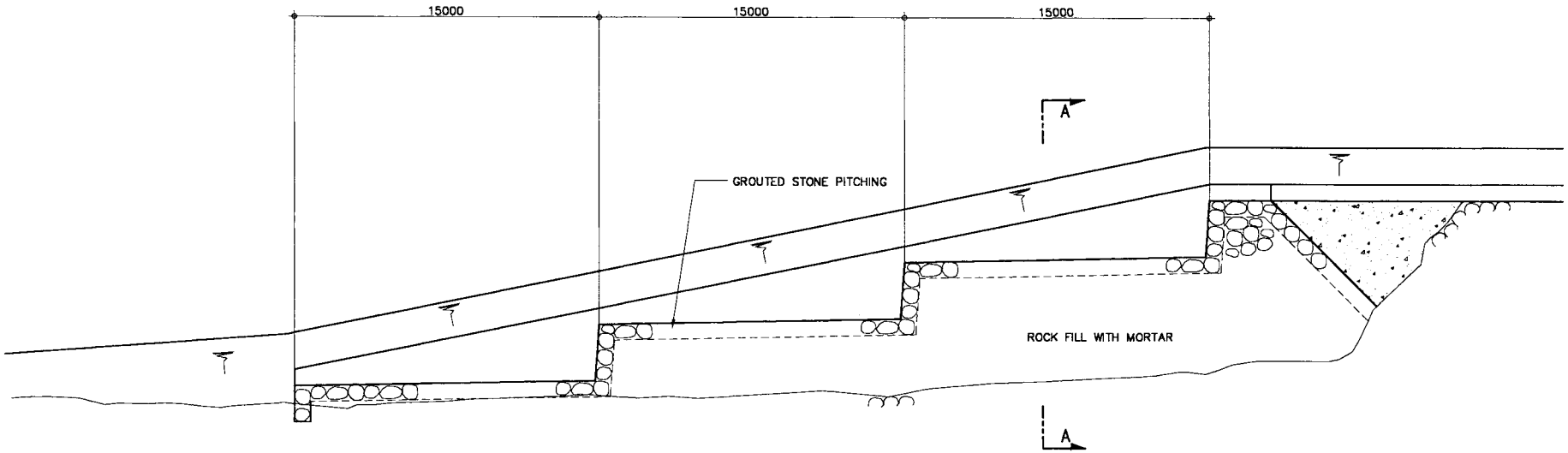

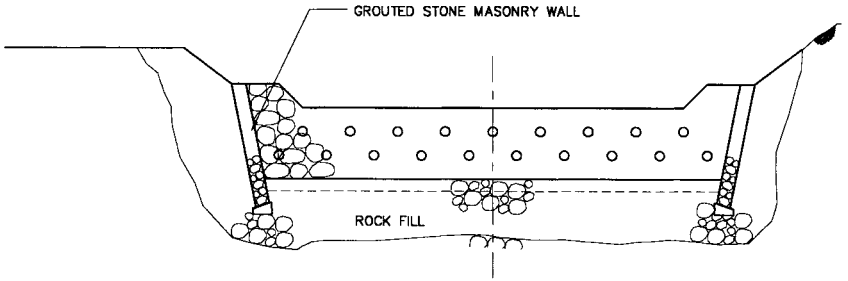

SECTION A–A
SCALE 1:300

UNITED NATIONS TRANSITIONAL ADMINISTRATION IN EAST TIMOR (UNTAET)	3 YEARS URGENT REHABILITATION WORK (LAGA-BAGUIA-AFALOICAI)	TITLE: CONSTRUCTION OF SABO DAM (2/4)		JAPAN INTERNATIONAL COOPERATION AGENCY PACIFIC CONSULTANTS INTERNATIONAL NIPPON KOEI CO., LTD YACHIYO ENGINEERING CO., LTD.
		JULY, 2000	APP. 3.3.3- DRAWING No. 24-02	

CONSTRUCTION OF SABO DAM (3/4)
SABO DAM NO. 2

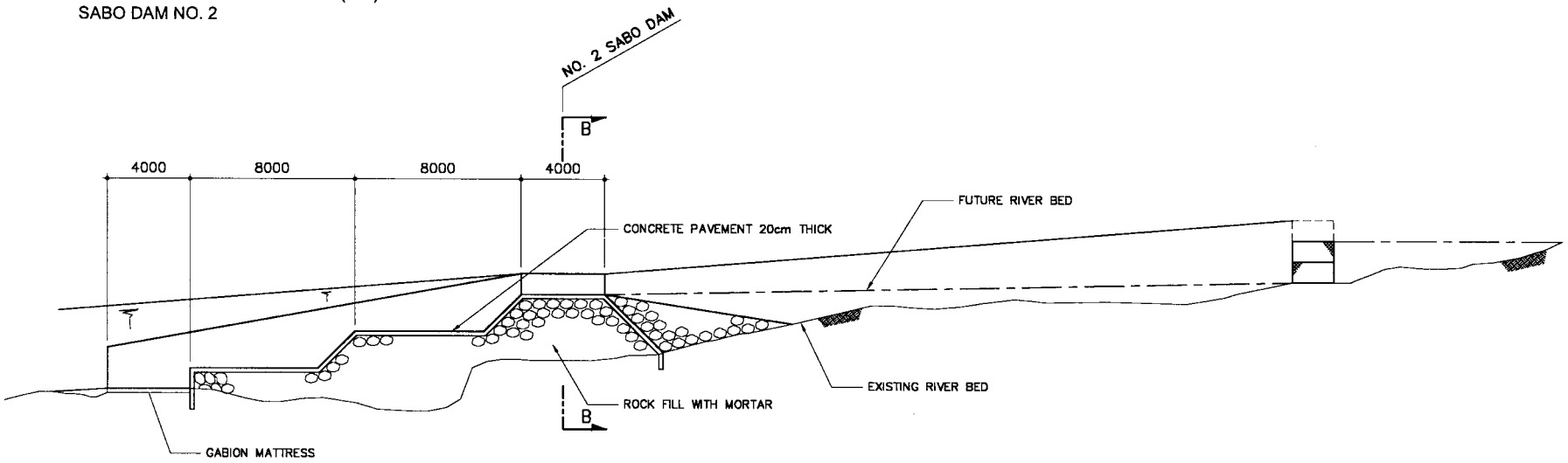

SABO DAM
SCALE 1:300

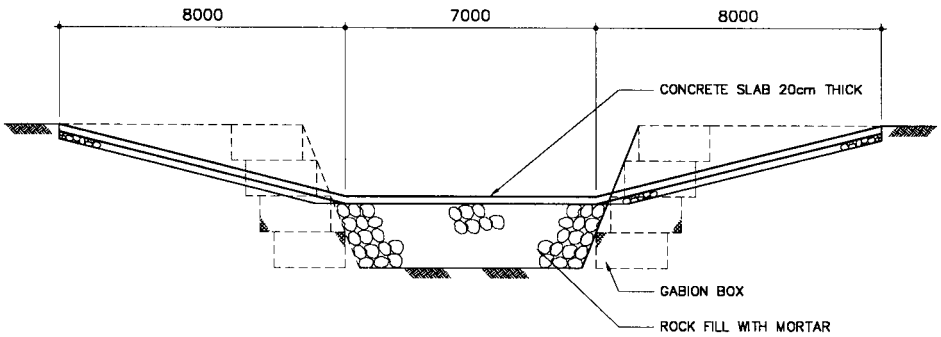

SECTION B–B
SCALE 1:200

UNITED NATIONS TRANSITIONAL ADMINISTRATION IN EAST TIMOR (UNTAET)	3 YEARS URGENT REHABILITATION WORK (LAGA-BAGUIA-AFALOICAI)	TITLE: CONSTRUCTION OF SABO DAM (3/4)		JAPAN INTERNATIONAL COOPERATION AGENCY PACIFIC CONSULTANTS INTERNATIONAL NIPPON KOEI CO., LTD YACHIYO ENGINEERING CO., LTD.
		JULY, 2000	APP. 3.3.3- DRAWING No. 24-03	

CONSTRUCTION OF SABO DAM (4/4)
TYPICAL SECTION OF ROAD AND WATER COURSE

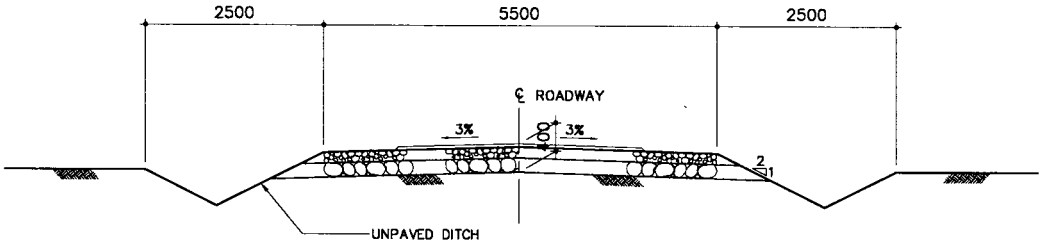

SECTION A–A
SCALE 1:100

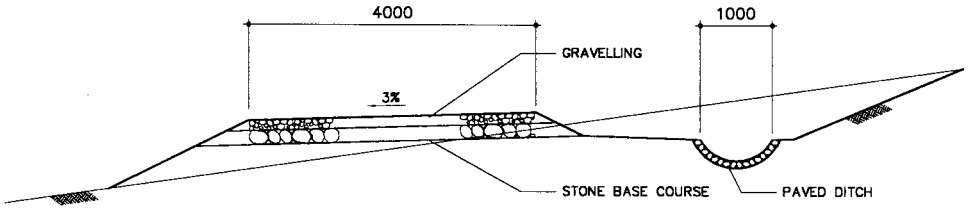

SECTION C–C
SCALE 1:100

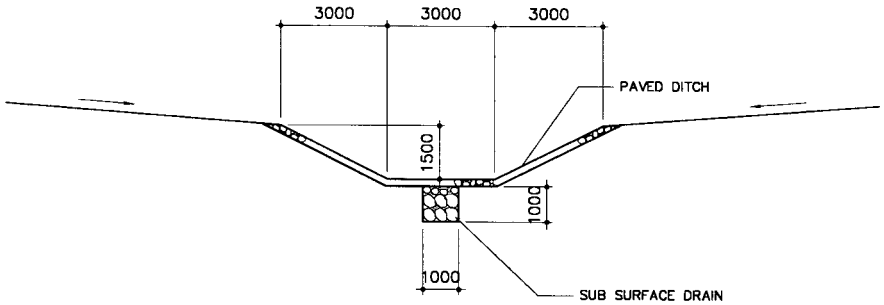

SECTION B–B
SCALE 1:200

UNITED NATIONS TRANSITIONAL ADMINISTRATION IN EAST TIMOR (UNTAET)	3 YEARS URGENT REHABILITATION WORK (LAGA-BAGUIA-AFALOICAI)	TITLE: SABO DAM (4/4) TYPICAL SECTION OF ROAD AND WATER COURSE		JAPAN INTERNATIONAL COOPERATION AGENCY PACIFIC CONSULTANTS INTERNATIONAL NIPPON KOEI CO., LTD YACHIYO ENGINEERING CO., LTD.
		JULY, 2000	APP. 3.3.3- DRAWING No. 24-04	

RECONSTRUCTION OF BRIDGE IN CRITICAL CONDITION
BRIDGE NO. 14 (TIBAR - GLENO - ERMERA ROAD)

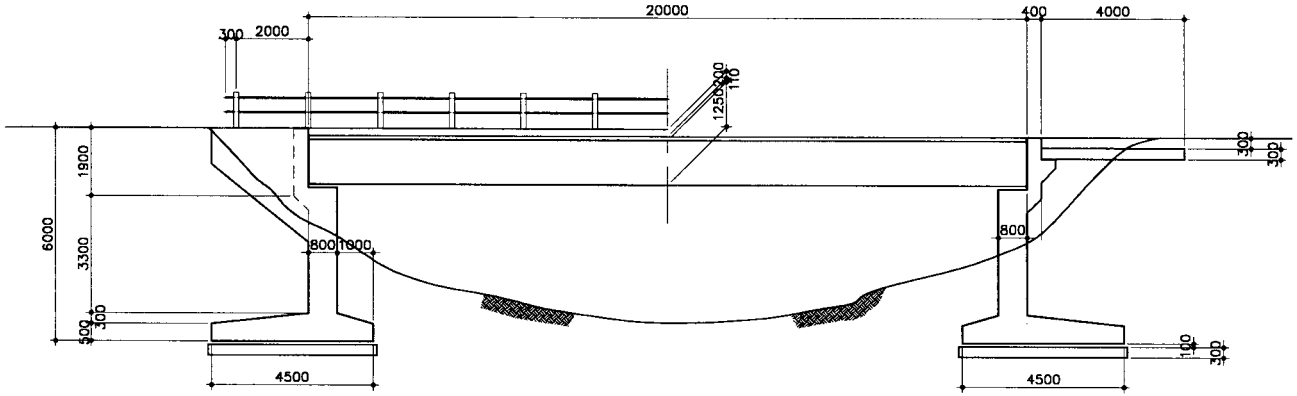

ELEVATION
SCALE 1:200

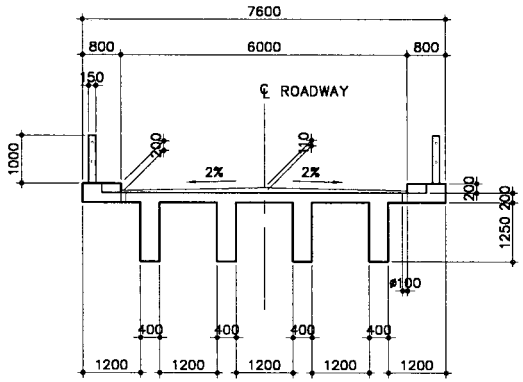

CROSS SECTION
SCALE 1:150

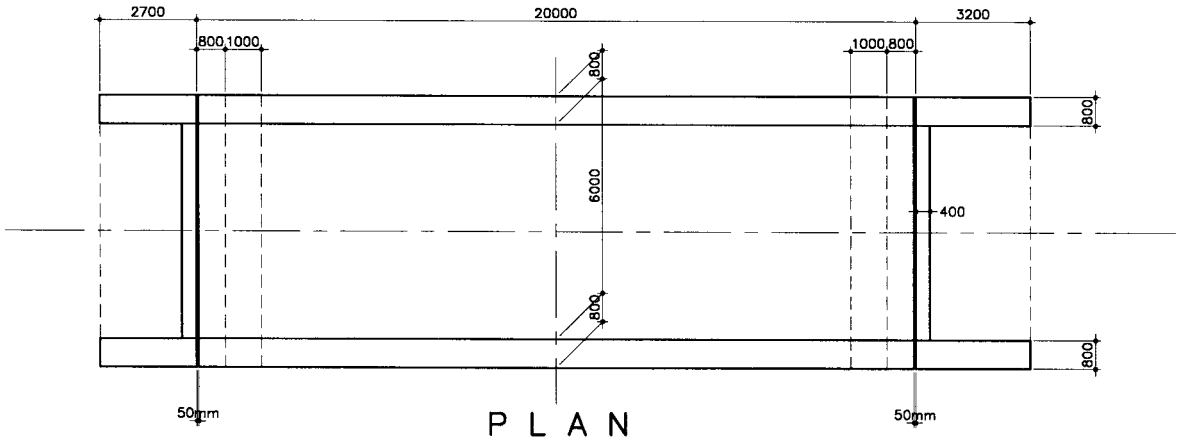

PLAN
SCALE 1:200

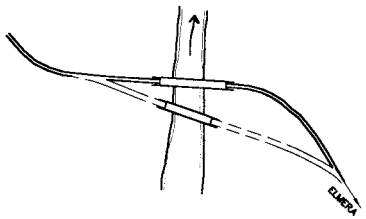

KEY PLAN (Km. 30.9)
NOT TO SCALE

UNITED NATIONS TRANSITIONAL ADMINISTRATION IN EAST TIMOR (UNTAET)	3 YEARS URGENT REHABILITATION WORK (TIBAR-GLENO-ERMERA ROAD)	TITLE: RECONSTRUCTION OF BRIDGE IN CRITICAL CONDITION		JAPAN INTERNATIONAL COOPERATION AGENCY PACIFIC CONSULTANTS INTERNATIONAL NIPPON KOEI CO., LTD YACHIYO ENGINEERING CO., LTD.
		JULY, 2000	APP. 3.3.3- DRAWING No. 25	

RECONSTRUCTION OF BRIDGE IN CRITICAL CONDTION
BRIDGE NO. 27 (TIBAR - GLENO - ERMERA ROAD)

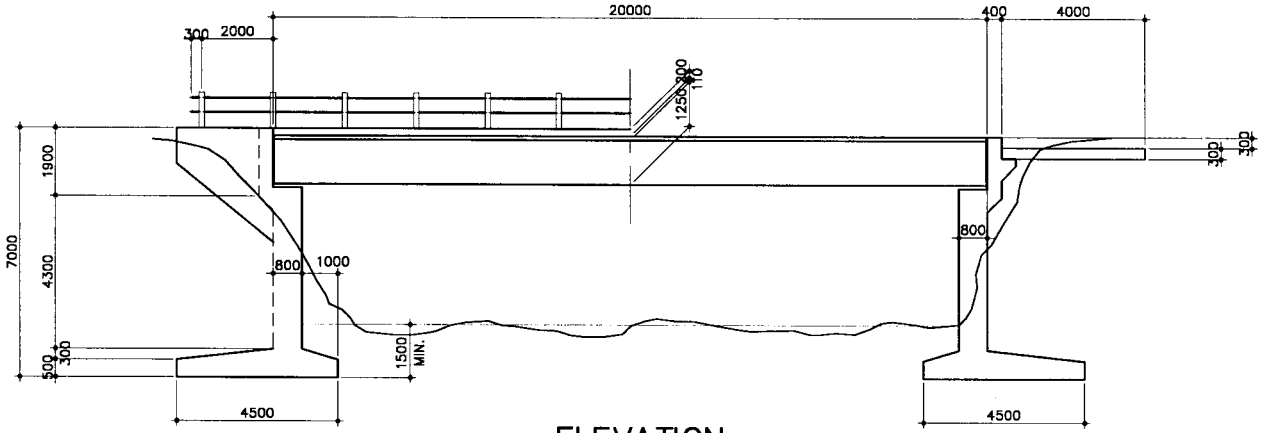

ELEVATION
SCALE 1:200

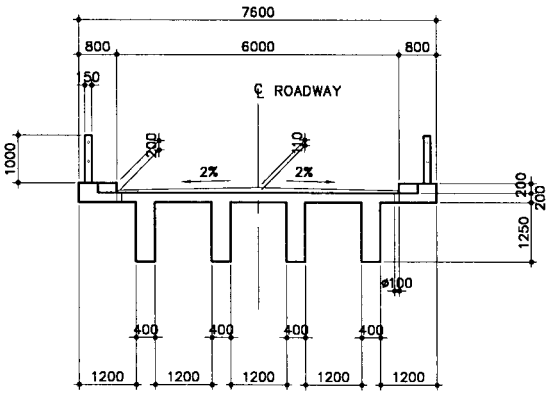

DECK SLAB
SCALE 1:200

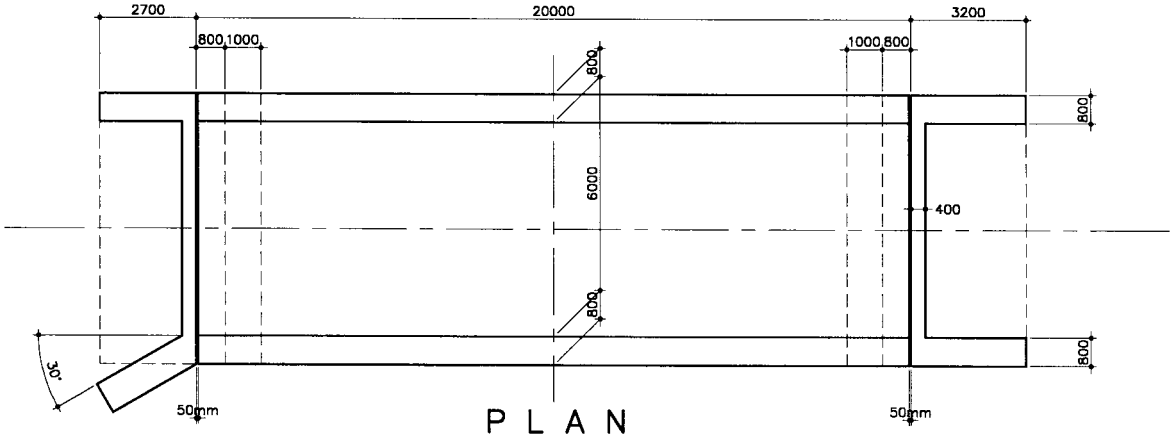

P L A N
SCALE 1:200

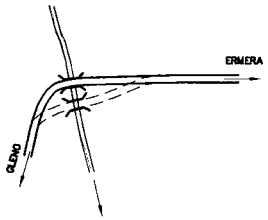

KEY PLAN (Km. 53.4)

UNITED NATIONS TRANSITIONAL ADMINISTRATION IN EAST TIMOR (UNTAET)	3 YEARS URGENT REHABILITATION WORK (TIBAR-GLENO-ERMERA ROAD)	TITLE: RECONSTRUCTION OF BRIDGE IN CRITICAL CONDTION		JAPAN INTERNATIONAL COOPERATION AGENCY PACIFIC CONSULTANTS INTERNATIONAL NIPPON KOEI CO., LTD YACHIYO ENGINEERING CO., LTD.
		JULY, 2000	APP. 3.3.3- DRAWING No. 26	

RECONSTRUCTION OF BRIDGE IN CRITICAL CONDITION
BRIDGE NO. 28 (TIBAR - GLENO - ERMERA ROAD)

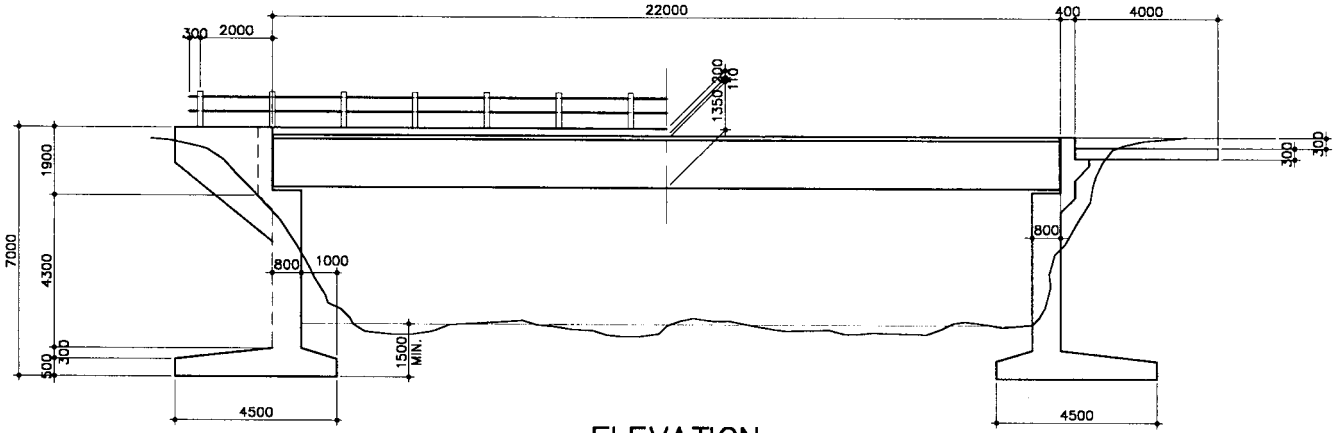

ELEVATION
SCALE 1:200

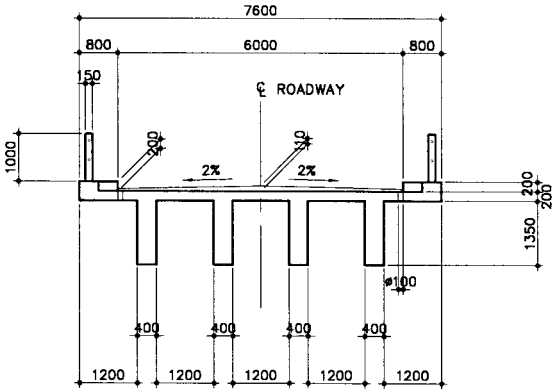

DECK SLAB
SCALE 1:200

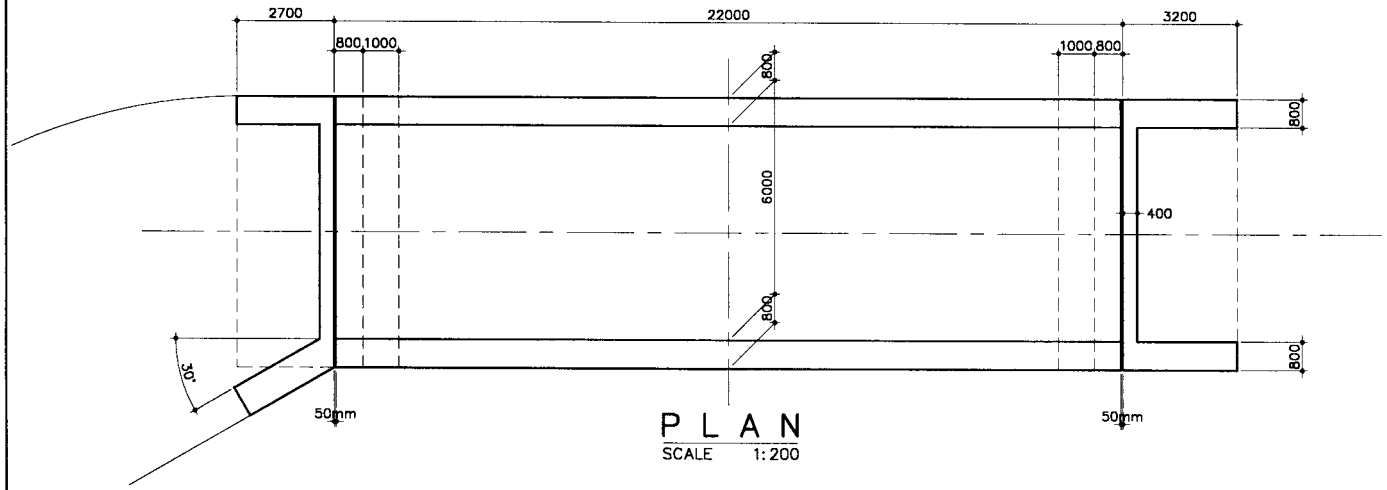

PLAN
SCALE 1:200

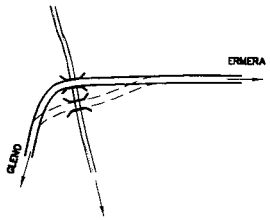

KEY PLAN (Km. 56.7)

UNITED NATIONS TRANSITIONAL ADMINISTRATION IN EAST TIMOR (UNTAET)	3 YEARS URGENT REHABILITATION WORK (TIBAR-GLENO-ERMERA ROAD)	TITLE: RECONSTRUCTION OF BRIDGE IN CRITICAL CONDITION		JAPAN INTERNATIONAL COOPERATION AGENCY PACIFIC CONSULTANTS INTERNATIONAL NIPPON KOEI CO., LTD YACHIYO ENGINEERING CO., LTD.
		JULY, 2000	APP. 3.3.3- DRAWING No. 27	

RECONSTRUCTION OF BRIDGE IN CRITICAL CONDITION
BRIDGE NO. 30 (TIBAR - GLENO - ERMERA BRIDGE)

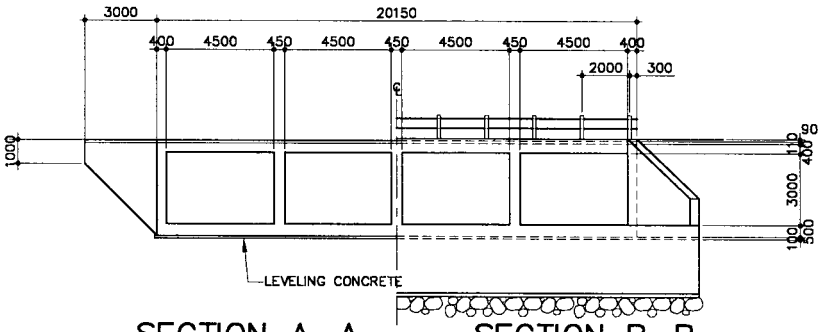

SECTION A–A
SCALE 1:300

SECTION B–B
SCALE 1:300

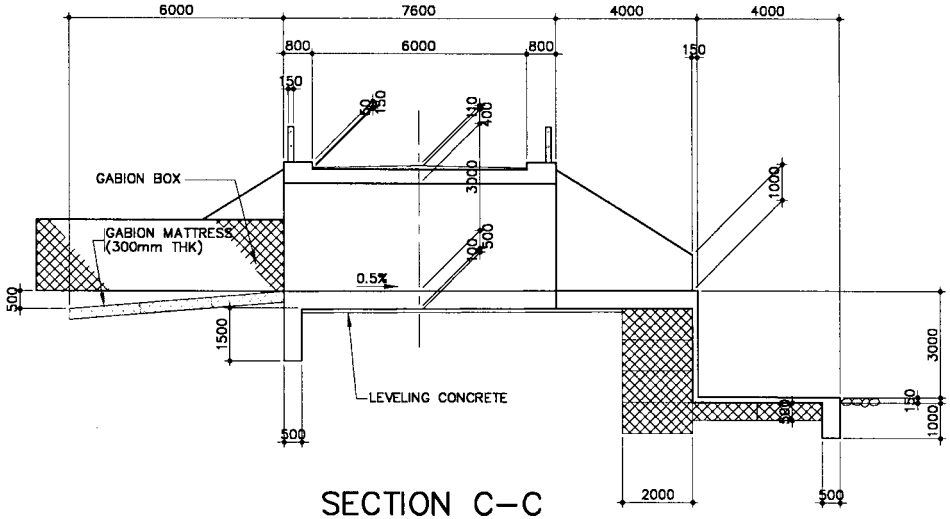

SECTION C–C
SCALE 1:200

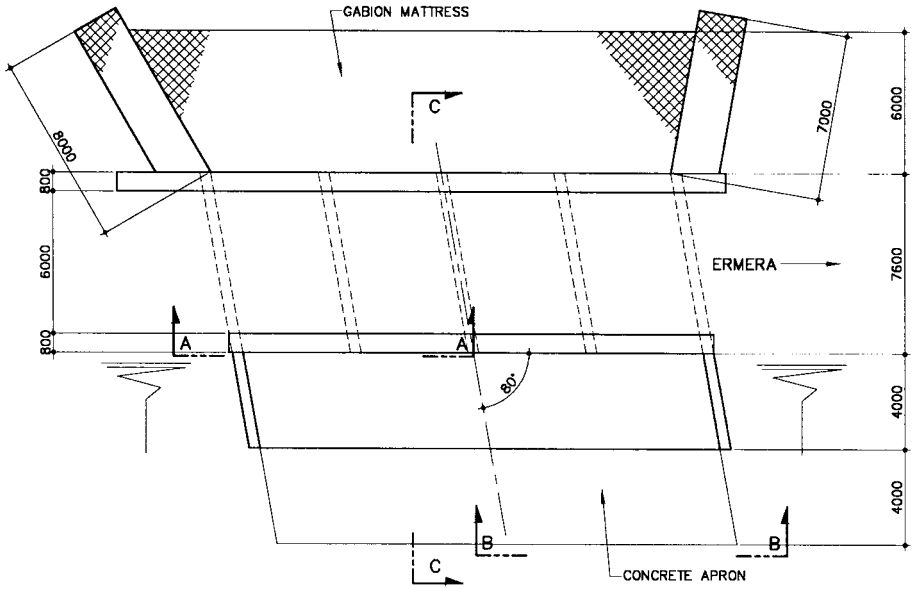

PLAN
SCALE 1:300

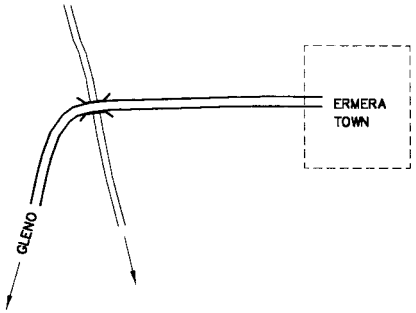

KEY PLAN (Km 57.4)
NTS

UNITED NATIONS TRANSITIONAL ADMINISTRATION IN EAST TIMOR (UNTAET)	3 YEARS URGENT REHABILITATION WORK (TIBAR-GLENO-ERMERA ROAD)	TITLE: RECONSTRUCTION OF BRIDGE IN CRITICAL CONDITION	JAPAN INTERNATIONAL COOPERATION AGENCY PACIFIC CONSULTANTS INTERNATIONAL NIPPON KOEI CO., LTD YACHIYO ENGINEERING CO., LTD.
		JULY, 2000 / APP. 3.3.3- DRAWING No. 28	

PROTECTION WORK OF ABUTMENT
BRIDGE NO. 22 (TIBAR - GLENO - ERMERA ROAD)

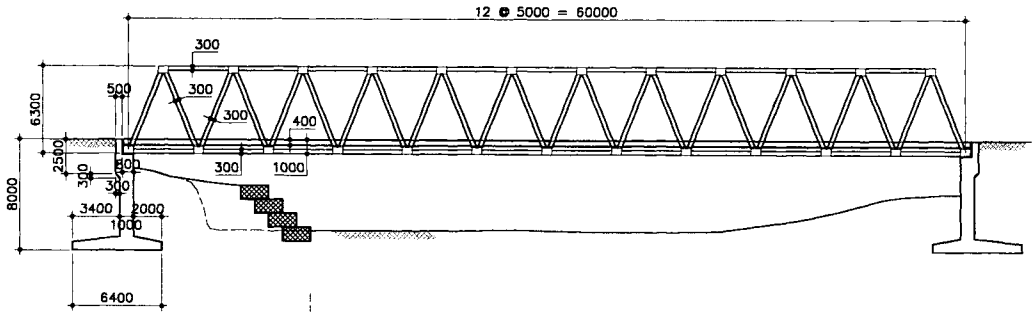

ELEVATION
SCALE 1:500

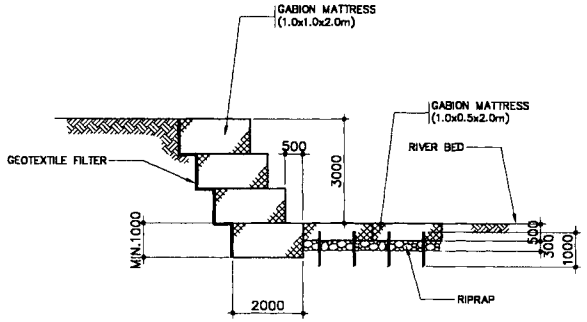

BANK PROTECTION
SCALE 1:200

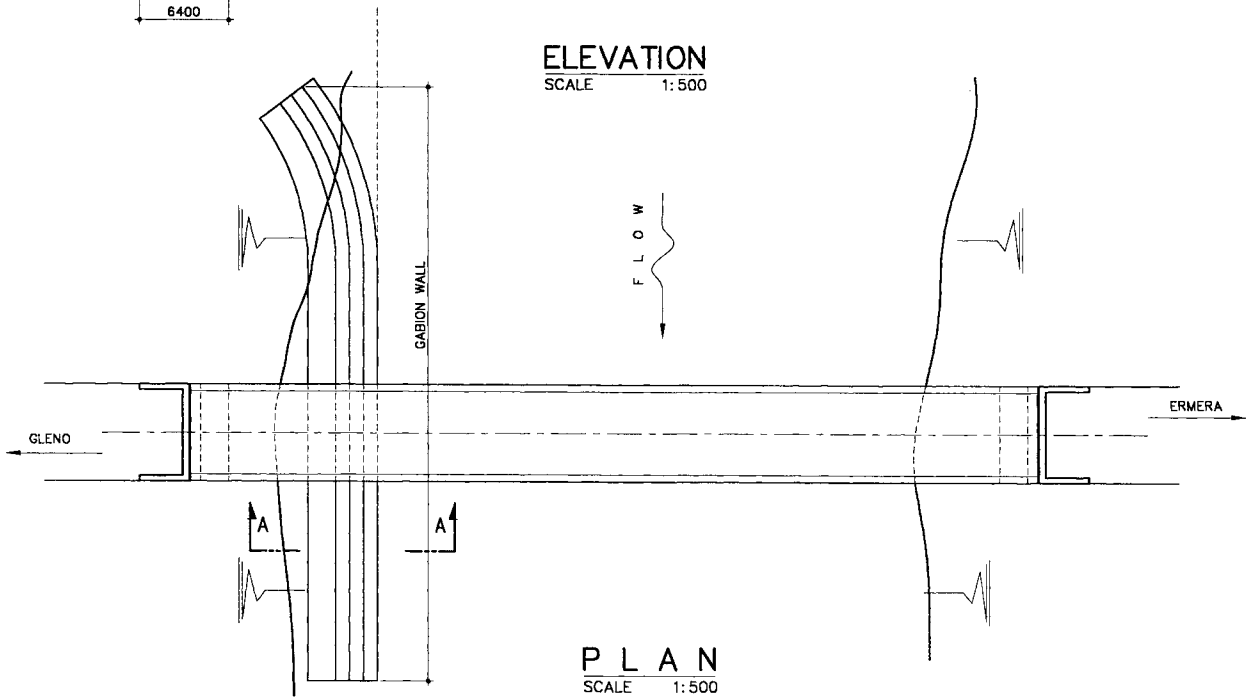

PLAN
SCALE 1:500

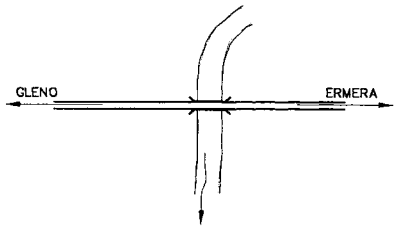

KEY PLAN (Km. 49.2)

UNITED NATIONS TRANSITIONAL ADMINISTRATION IN EAST TIMOR (UNTAET)	3 YEARS URGENT REHABILITATION WORK (TIBAR-GLENO-ERMERA ROAD)	TITLE: PROTECTION WORK OF ABUTMENT		JAPAN INTERNATIONAL COOPERATION AGENCY PACIFIC CONSULTANTS INTERNATIONAL NIPPON KOEI CO., LTD YACHIYO ENGINEERING CO., LTD.
		JULY, 2000	APP. 3.3.3- DRAWING No. 29	

CONTINUATION OF BRIDGE CONSTRUCTION WHICH WAS SUSPENDED
BRIDGE NO. 16 (MANATUTO - BICULIE - NATABORA ROAD)

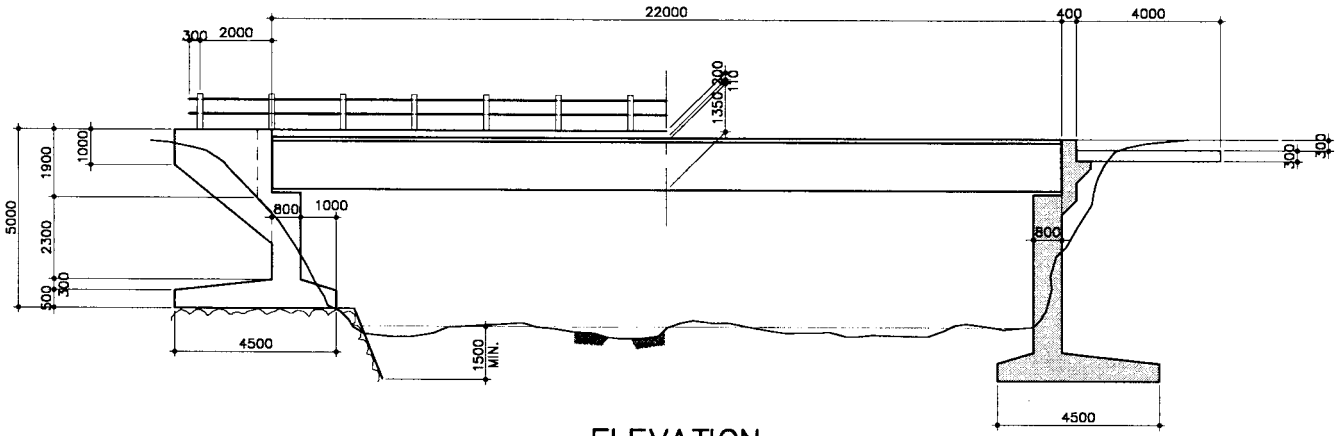

ELEVATION
SCALE 1:200

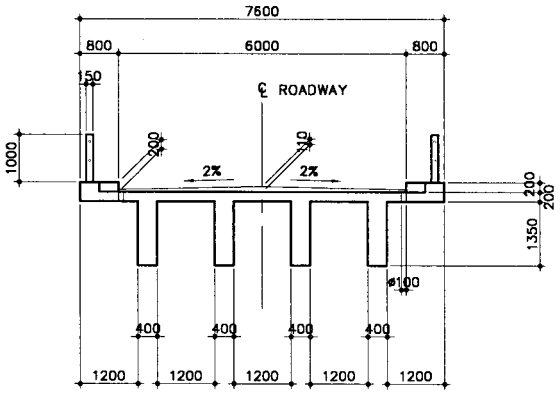

DECK SLAB
SCALE 1:200

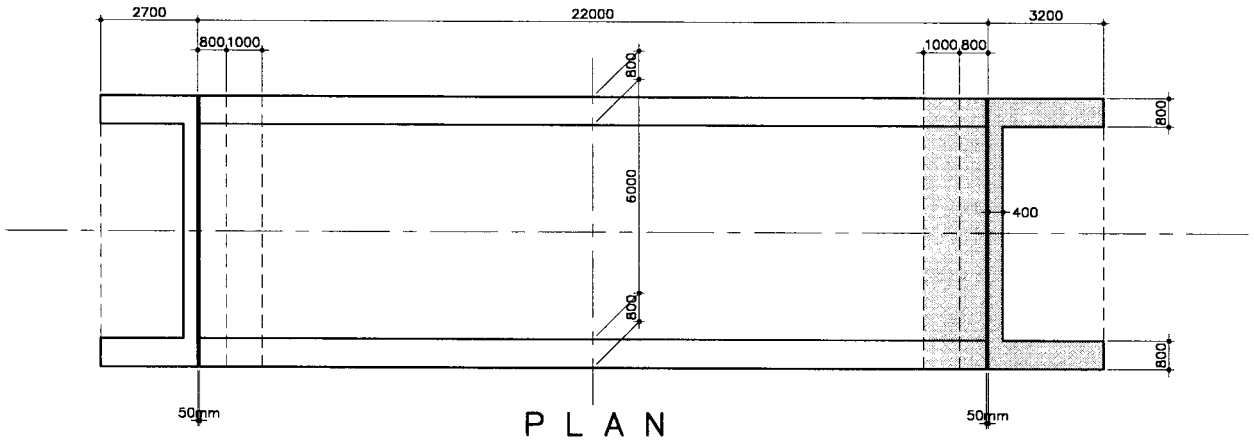

PLAN
SCALE 1:200

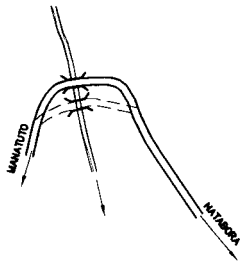

KEY PLAN (Km. 45.3)

UNITED NATIONS TRANSITIONAL ADMINISTRATION IN EAST TIMOR (UNTAET)	3 YEARS URGENT REHABILITATION WORK (MANATUTO-BICULIE-NATABORA)	TITLE: CONTINUATION OF BRIDGE CONSTRUCTION WHICH WAS SUSPENDED		JAPAN INTERNATIONAL COOPERATION AGENCY PACIFIC CONSULTANTS INTERNATIONAL NIPPON KOEI CO., LTD YACHIYO ENGINEERING CO., LTD.
		JULY, 2000	APP. 3.3.3- DRAWING No. 30	

CONTINUATION OF BRIDGE CONSTRUCTION WHICH WAS SUSPENDED
BRIDGE NO. 21 (MANATUTO - BICULIE - NATABORA ROAD)

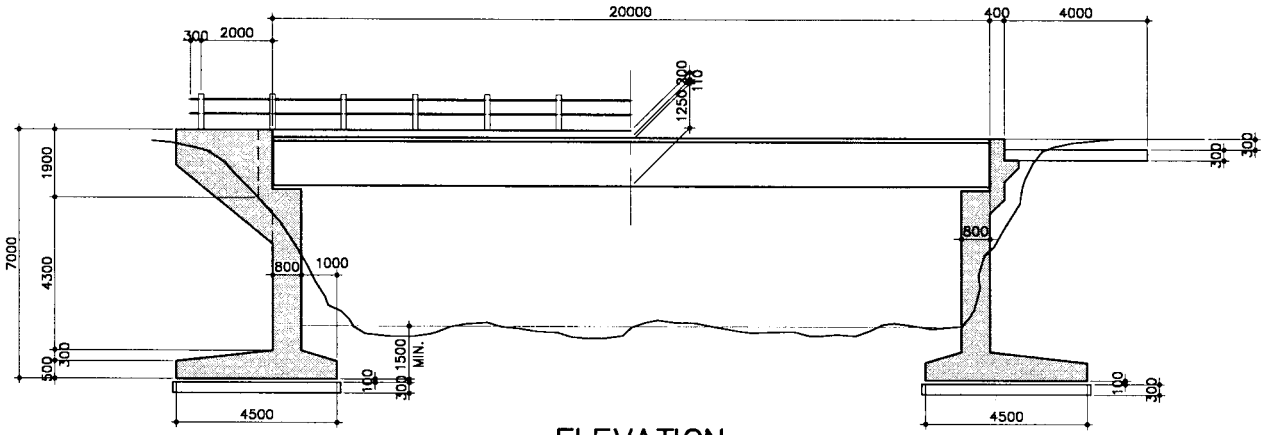

ELEVATION
SCALE 1:200

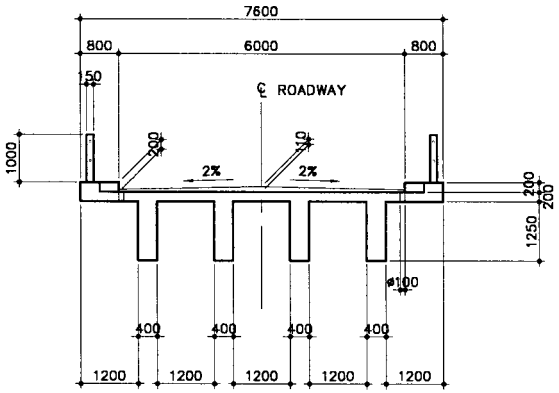

DECK SLAB
SCALE 1:200

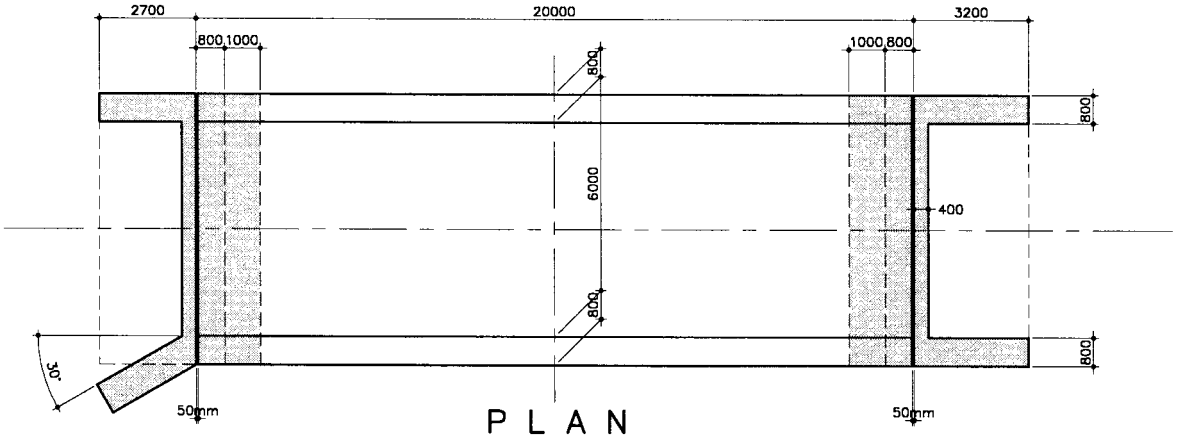

P L A N
SCALE 1:200

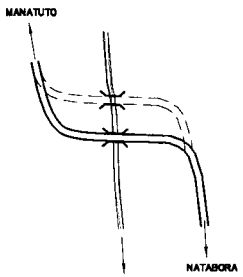

KEY PLAN (Km. 49.0)

UNITED NATIONS TRANSITIONAL ADMINISTRATION IN EAST TIMOR (UNTAET)	3 YEARS URGENT REHABILITATION WORK (MANATUTO-BICULIE-NATABORA)	TITLE: CONTINUATION OF BRIDGE CONSTRUCTION WHICH WAS SUSPENDED		JAPAN INTERNATIONAL COOPERATION AGENCY PACIFIC CONSULTANTS INTERNATIONAL NIPPON KOEI CO., LTD YACHIYO ENGINEERING CO., LTD.
		JULY, 2000	APP. 3.3.3- DRAWING No. 31	

CONSTRUCTION OF NEW BRIDGE
BRIDGE NO. 31 (MANATUTO - BICULIE - NATABORA ROAD)

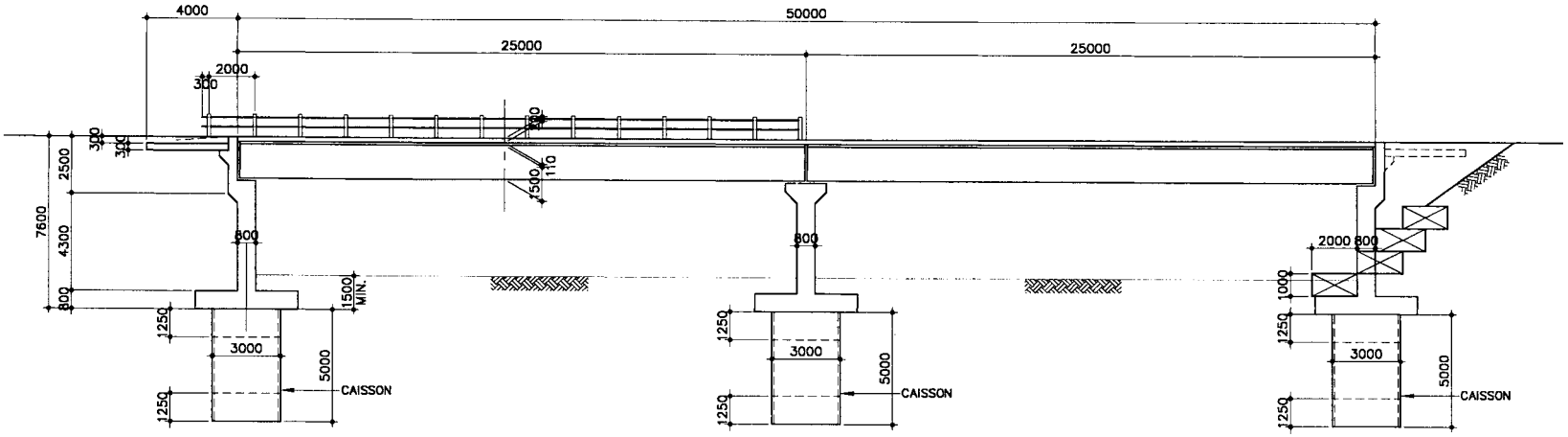

ELEVATION
SCALE 1:300

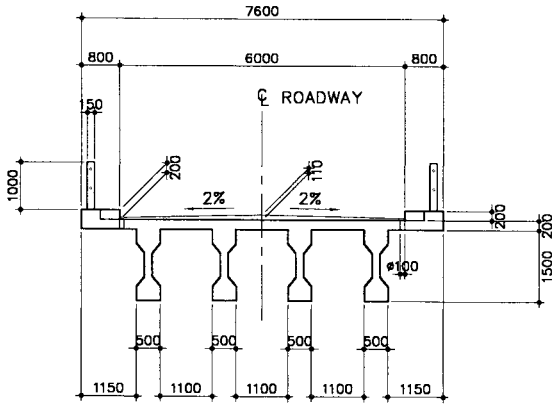

SECTION
SCALE 1:150

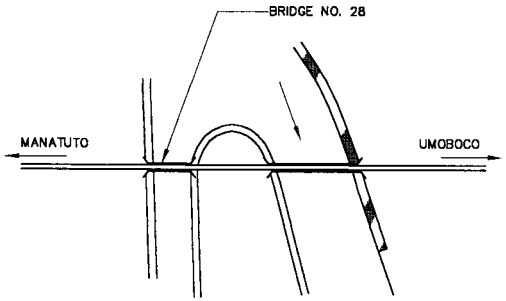

KEY PLAN (Km. 75.5)
NOT TO SCALE

UNITED NATIONS TRANSITIONAL ADMINISTRATION IN EAST TIMOR (UNTAET)	3 YEARS URGENT REHABILITATION WORK (MANATUTO-BICULIE-NATABORA)	TITLE: CONSTRUCTION OF NEW BRIDGE		JAPAN INTERNATIONAL COOPERATION AGENCY PACIFIC CONSULTANTS INTERNATIONAL NIPPON KOEI CO., LTD YACHIYO ENGINEERING CO., LTD.
		JULY, 2000	APP. 3.3.3- DRAWING No. 32	

RECONSTRUCTION OF BRIDGE IN CRITICAL CONDITION
BRIDGE NO. 16 (BAUCAU-VIQUEQUE)

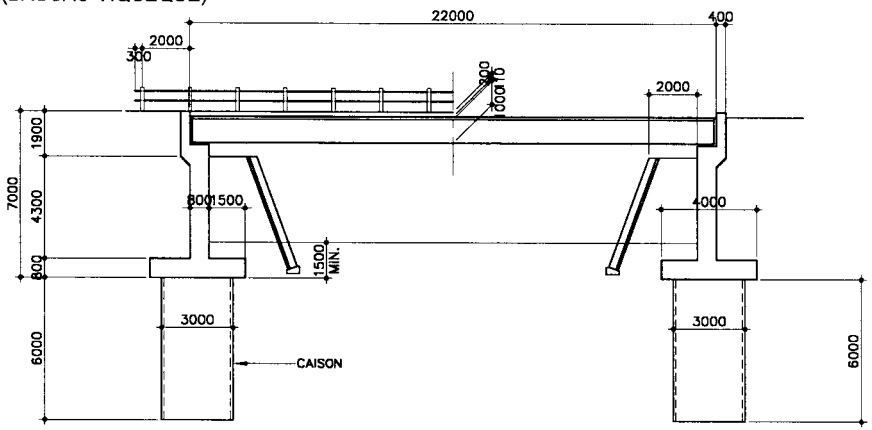

ELEVATION
SCALE 1:300

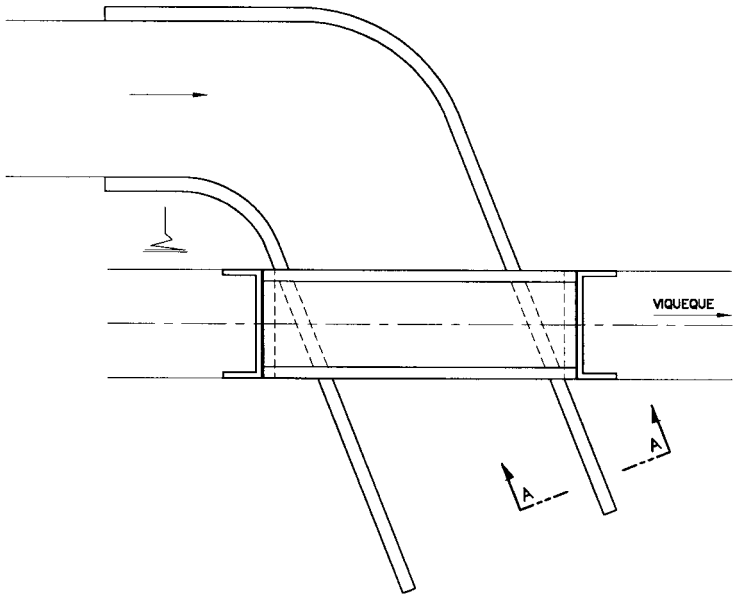

PLAN
SCALE 1:500

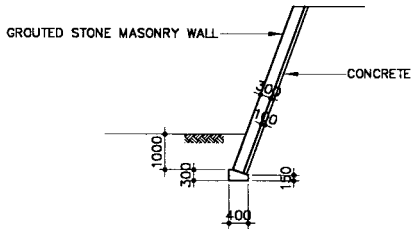

STONE MASONRY WALL
SCALE 1:200

UNITED NATIONS TRANSITIONAL ADMINISTRATION IN EAST TIMOR (UNTAET)	3 YEARS URGENT REHABILITATION WORK (BAUCAU-VIQUEQUE)	TITLE: RECONSTRUCTION OF BRIDGE IN CRITICAL CONDITION	JAPAN INTERNATIONAL COOPERATION AGENCY PACIFIC CONSULTANTS INTERNATIONAL NIPPON KOEI CO., LTD YACHIYO ENGINEERING CO., LTD.
		JULY, 2000 / APP. 3.3.3- DRAWING No. 33	

RECONSTRUCTION OF BRIDGE IN CRITICAL CONDITION (1/2)
BRIDGE NO. 02 (J.C. OF SAME-BETANO ROAD-CASSA)

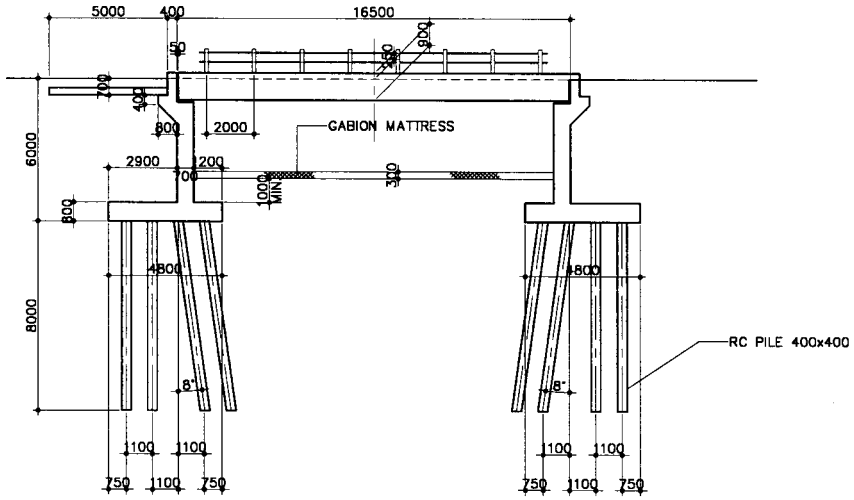

ELEVATION
SCALE 1:300

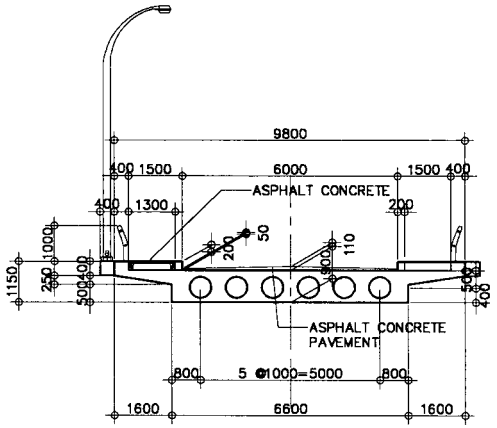

BRIDGE SECTION
SCALE 1:200

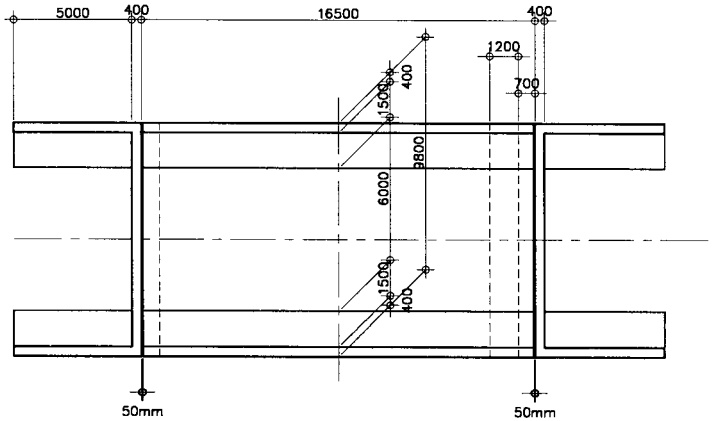

P L A N
SCALE 1:300

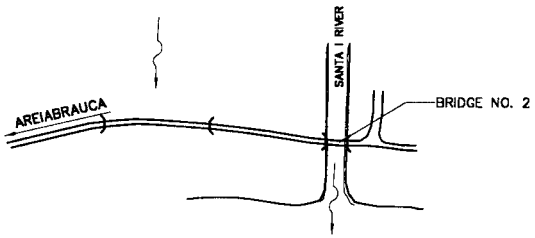

KEY PLAN

UNITED NATIONS TRANSITIONAL ADMINISTRATION IN EAST TIMOR (UNTAET)	3 YEARS URGENT REHABILITATION WORK (J.C. OF SAME-BETANO ROAD-CASSA)	TITLE: RECONSTRUCTION OF BRIDGE IN CRITICAL CONDITION		JAPAN INTERNATIONAL COOPERATION AGENCY PACIFIC CONSULTANTS INTERNATIONAL NIPPON KOEI CO., LTD YACHIYO ENGINEERING CO., LTD.
		JULY, 2000	APP. 3.3.3- DRAWING No. 34-01	

RECONSTRUCTION OF BRIDGE IN CRITICAL CONDITION (2/2)
BRIDGE NO. 02 (J.C. OF SAME-BETANO ROAD-CASSA)

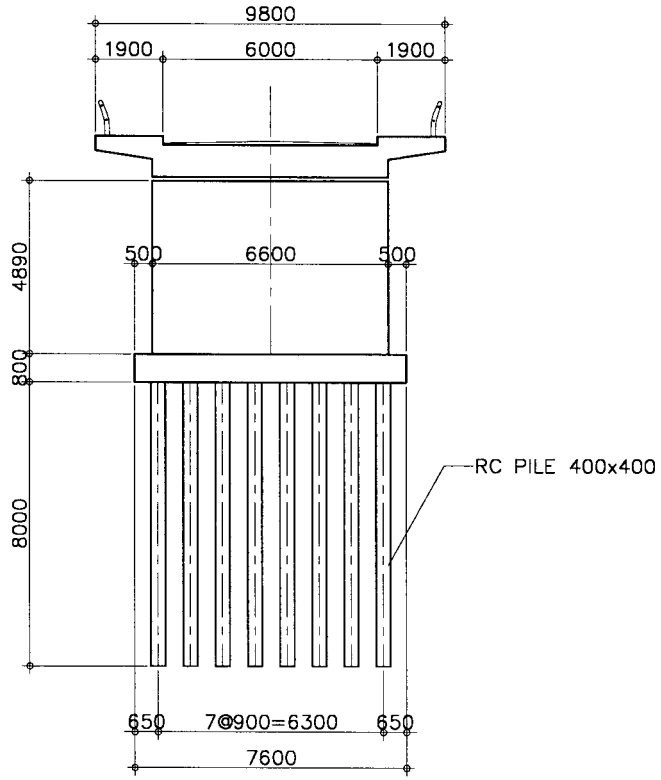

SECTION AT PIER
SCALE 1:200

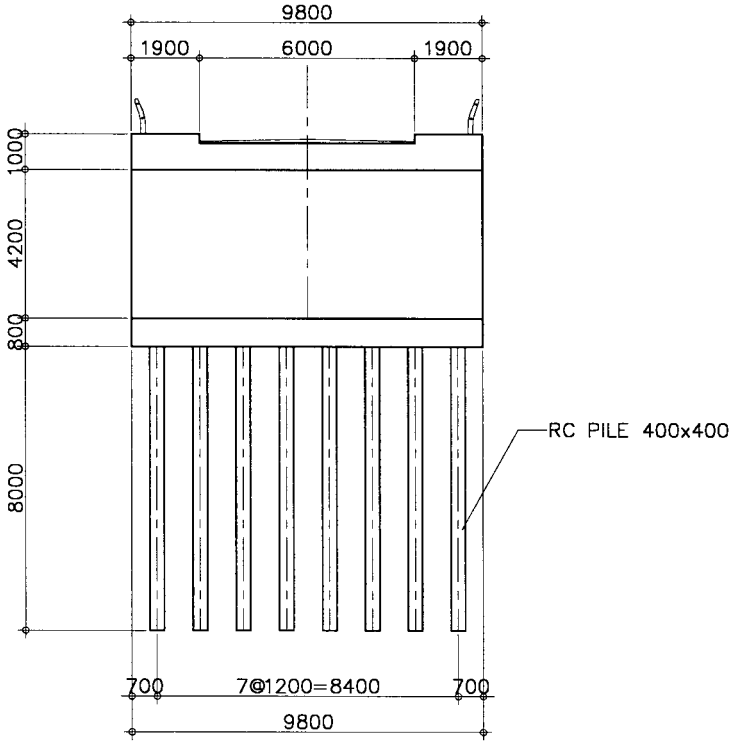

SECTION AT ABUTMENT
SCALE 1:200

UNITED NATIONS TRANSITIONAL ADMINISTRATION IN EAST TIMOR (UNTAET)	3 YEARS URGENT REHABILITATION WORK (J.C. OF SAME-BETANO ROAD-CASSA)	TITLE: RECONSTRUCTION OF BRIDGE IN CRITICAL CONDITION		JAPAN INTERNATIONAL COOPERATION AGENCY PACIFIC CONSULTANTS INTERNATIONAL NIPPON KOEI CO., LTD YACHIYO ENGINEERING CO., LTD.
		JULY, 2000	APP. 3.3.3- DRAWING No. 34-02	

CONTINUATION OF BRIDGE CONSTRUCTION WHICH WAS SUSPENDED (1/2)
BRIDGE NO. 04 (SAME-CASSA ROAD)

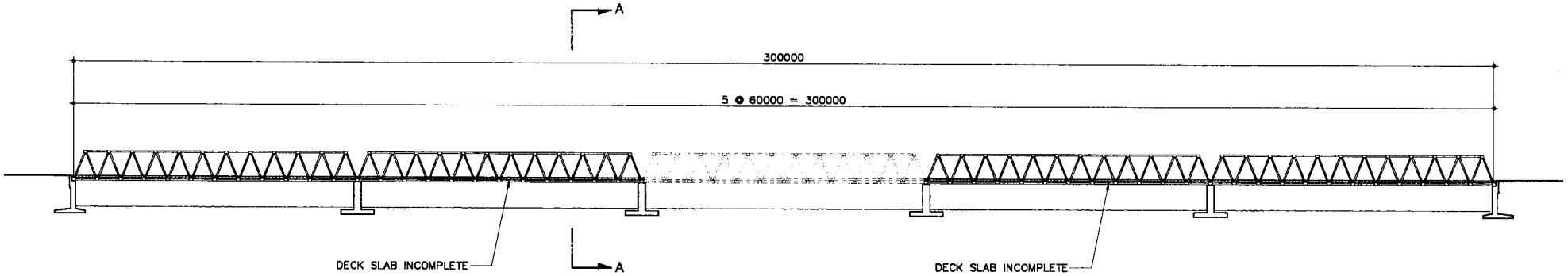

ELEVATION
SCALE 1:1200

NOTE:

1. INSTALLATION OF MID SPAN
2. POURING DECKS TO THREE SPANS

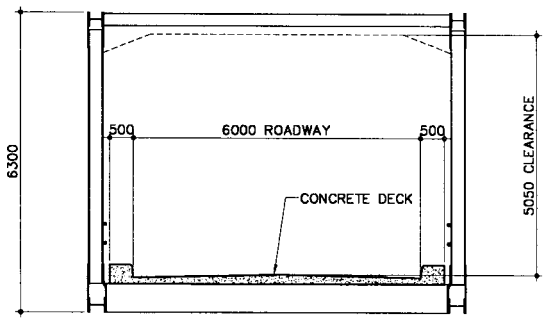

SECTION A–A
SCALE 1:150

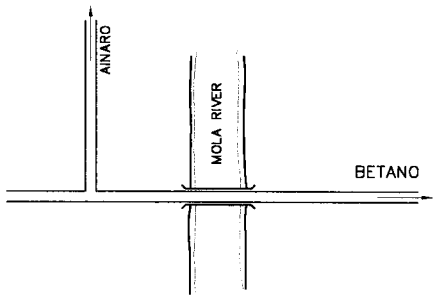

KEY PLAN (Km 23.4)
NTS

UNITED NATIONS TRANSITIONAL ADMINISTRATION IN EAST TIMOR (UNTAET)	3 YEARS URGENT REHABILITATION WORK (J.C. OF SAME-BETANO ROAD-CASSA)	TITLE: EXISTING BRIDGE		JAPAN INTERNATIONAL COOPERATION AGENCY PACIFIC CONSULTANTS INTERNATIONAL NIPPON KOEI CO., LTD YACHIYO ENGINEERING CO., LTD.
		JULY, 2000	APP. 3.3.3- DRAWING No. 35-01	

CONTINUATION OF BRIDGE CONSTRUCTION WHICH WAS SUSPENDED (2/2)
BRIDGE NO. 04 (SAME-CASSA ROAD)

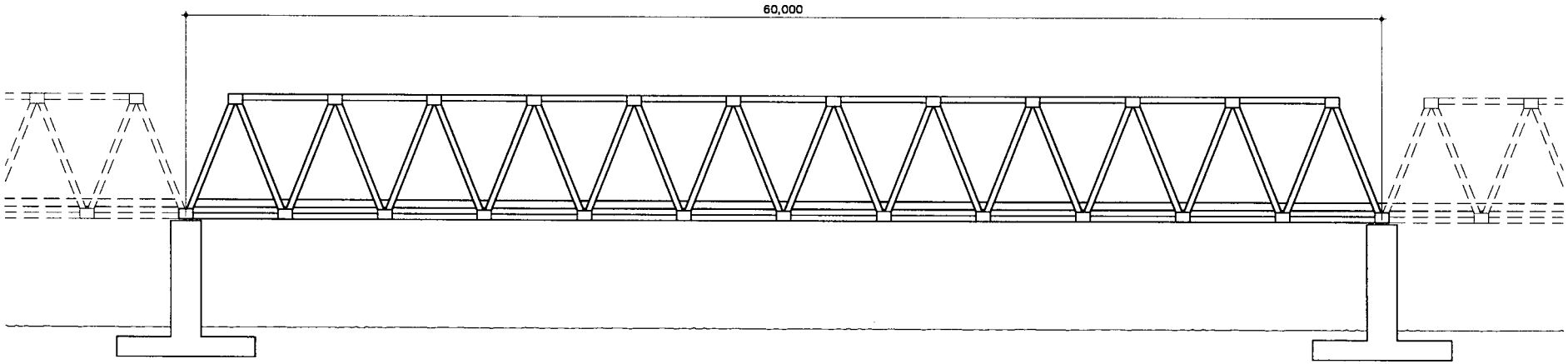

ELEVATION
SCALE 1:300

NOTE:

1. INSTALLATION OF TRUSS
2. COMPLETION OF DECK

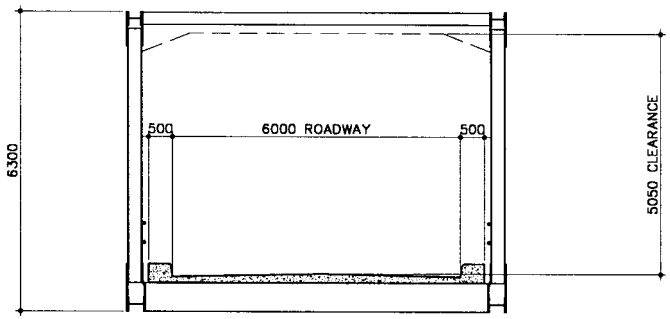

BRIDGE SECTION
SCALE 1:150

UNITED NATIONS TRANSITIONAL ADMINISTRATION IN EAST TIMOR (UNTAET)	3 YEARS URGENT REHABILITATION WORK (J.C. OF SAME-BETANO ROAD-CASSA)	TITLE: INSTALLATION OF TRUSS		JAPAN INTERNATIONAL COOPERATION AGENCY PACIFIC CONSULTANTS INTERNATIONAL NIPPON KOEI CO., LTD YACHIYO ENGINEERING CO., LTD.
		JULY, 2000	APP. 3.3.3- DRAWING No. 35-02	

CONTINUATION OF BRIDGE CONSTRUCTION WHICH WAS SUSPENDED (1/3)
BRIDGE NO. 09 (BETANO-NATABORA ROAD)

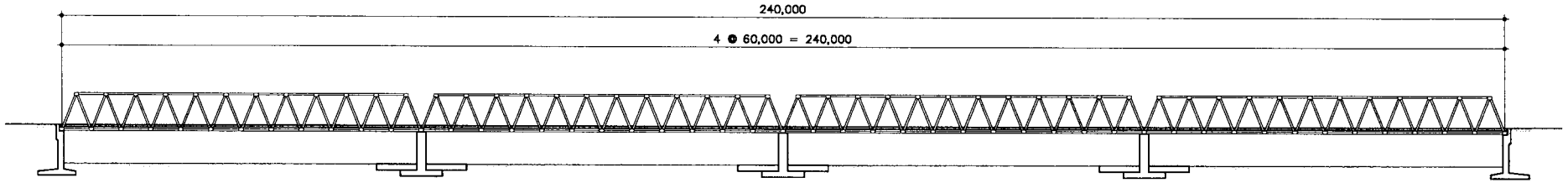

ELEVATION
SCALE 1:1200

NOTE:

1. POURING DECK TO ALL SPANS
2. COMPLETION OF APPROACH ROADS
3. PROTECTION WORKS TO PIERS AND ABUTMENTS

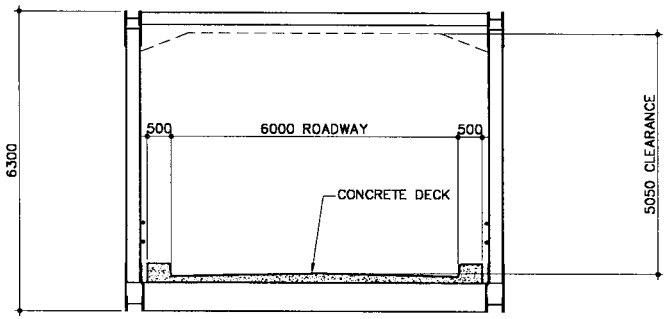

BRIDGE SECTION
SCALE 1:150

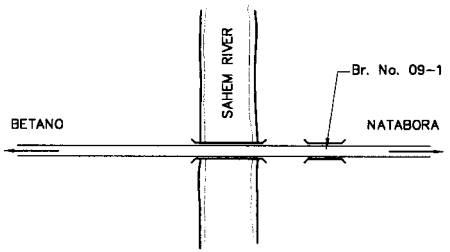

KEY PLAN (Km 42.5)
NTS

UNITED NATIONS TRANSITIONAL ADMINISTRATION IN EAST TIMOR (UNTAET)	3 YEARS URGENT REHABILITATION WORK (BETANO-NATABORA)	TITLE: EXISTING BRIDGE		JAPAN INTERNATIONAL COOPERATION AGENCY PACIFIC CONSULTANTS INTERNATIONAL NIPPON KOEI CO., LTD YACHIYO ENGINEERING CO., LTD.
		JULY, 2000	APP. 3.3.3- DRAWING No. 36-01	

CONTINUATION OF BRIDGE CONSTRUCTION WHICH WAS SUSPENDED (2/3)
BRIDGE NO. 09 (BETANO-NATABORA ROAD)

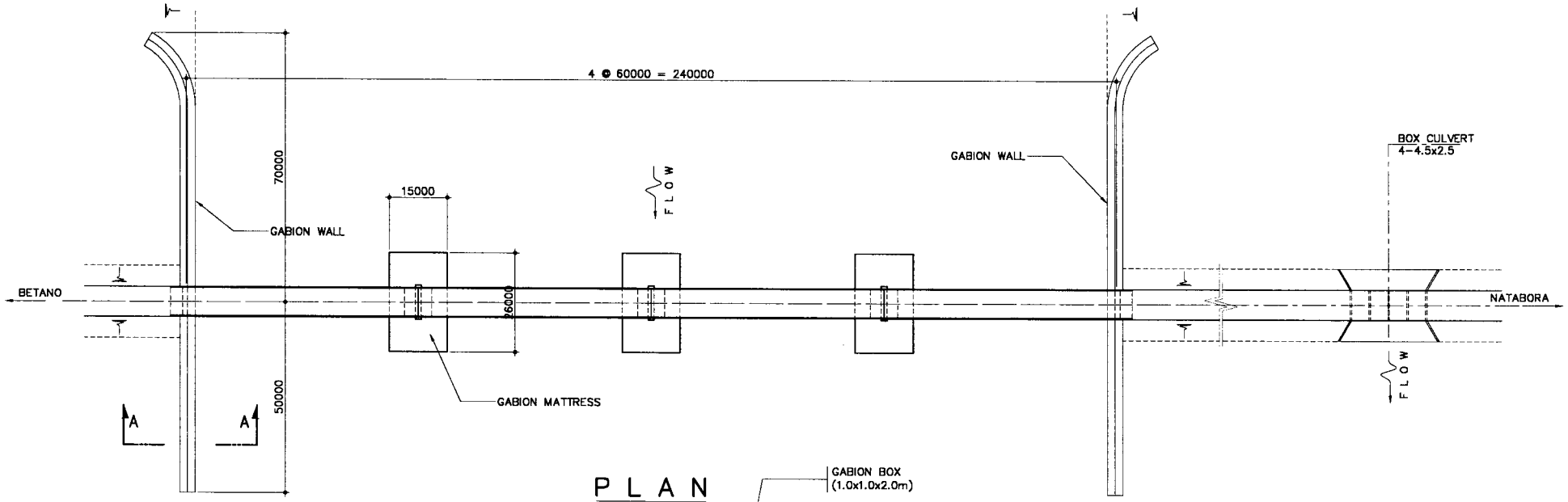

PLAN
SCALE 1:1500

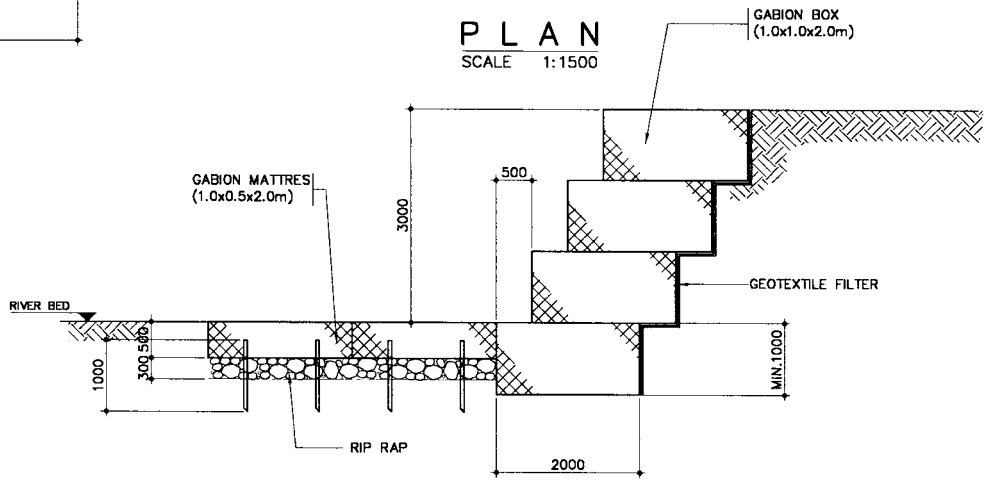

GABION WALL
SCALE 1:100

UNITED NATIONS TRANSITIONAL ADMINISTRATION IN EAST TIMOR (UNTAET)	3 YEARS URGENT REHABILITATION WORK (BETANO-NATABORA)	TITLE: PROTECTION WORK OF BRIDGE		JAPAN INTERNATIONAL COOPERATION AGENCY PACIFIC CONSULTANTS INTERNATIONAL NIPPON KOEI CO., LTD YACHIYO ENGINEERING CO., LTD.
		JULY, 2000	APP. 3.3.3- DRAWING No. 36-02	

CONTINUATION OF BRIDGE CONSTRUCTION WHICH WAS SUSPENDED (3/3)
BRIDGE NO. 09-1 (BETANO-NATABORA ROAD)

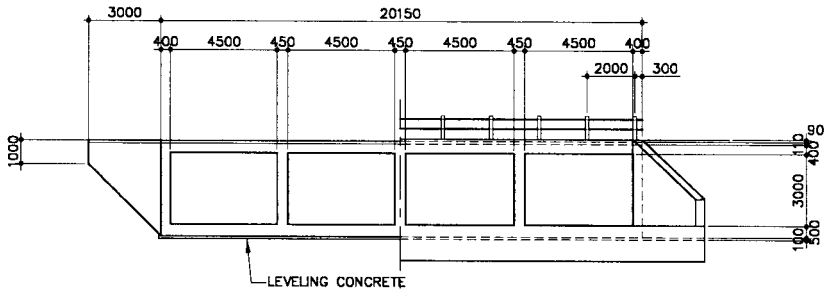

SECTION A–A
SCALE 1:300

SECTION B–B
SCALE 1:300

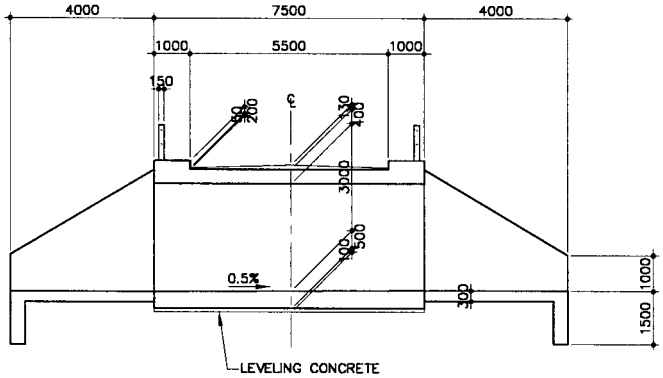

SECTION C–C
SCALE 1:200

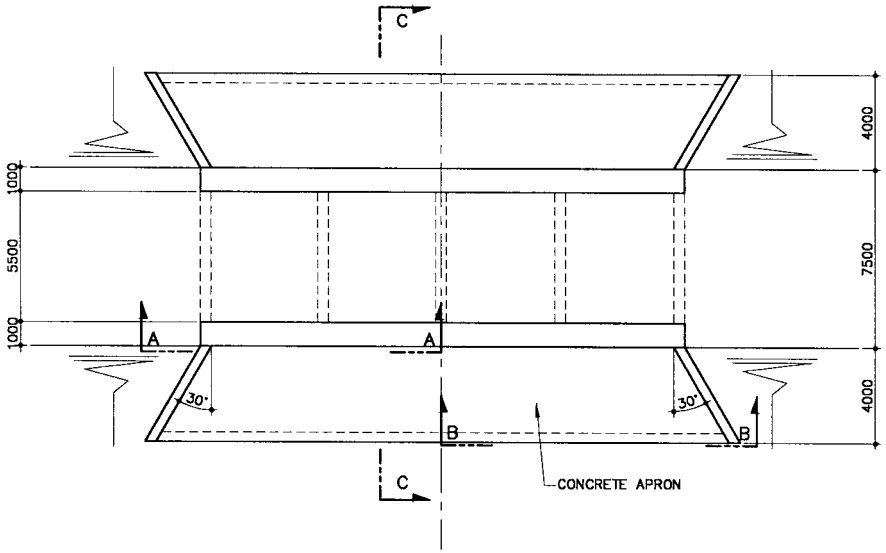

PLAN
SCALE 1:300

UNITED NATIONS TRANSITIONAL ADMINISTRATION IN EAST TIMOR (UNTAET)	3 YEARS URGENT REHABILITATION WORK (BETANO-NATABORA)	TITLE:	BOX CULVERT	JAPAN INTERNATIONAL COOPERATION AGENCY PACIFIC CONSULTANTS INTERNATIONAL NIPPON KOEI CO., LTD YACHIYO ENGINEERING CO., LTD.
		JULY, 2000	APP. 3.3.3- DRAWING No. 36-03	

CONSTRUCTION OF NEW CAUSEWAY
BRIDGE NO. 20 (VIQUEQUE-NATABORA ROAD)

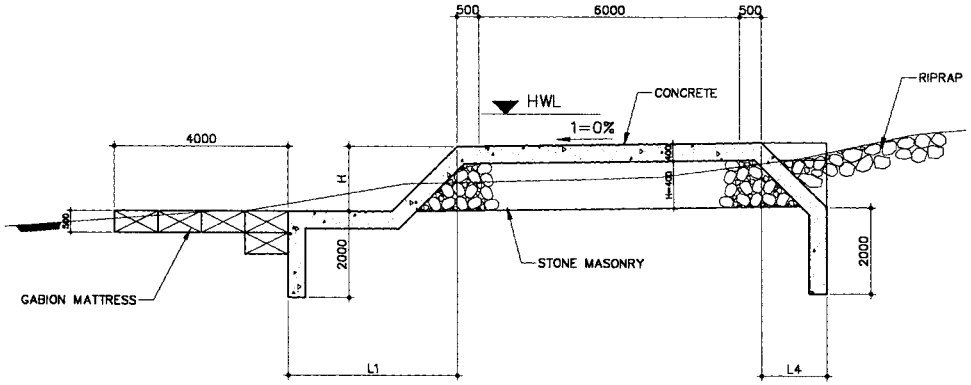

SECTION
SCALE 1:150

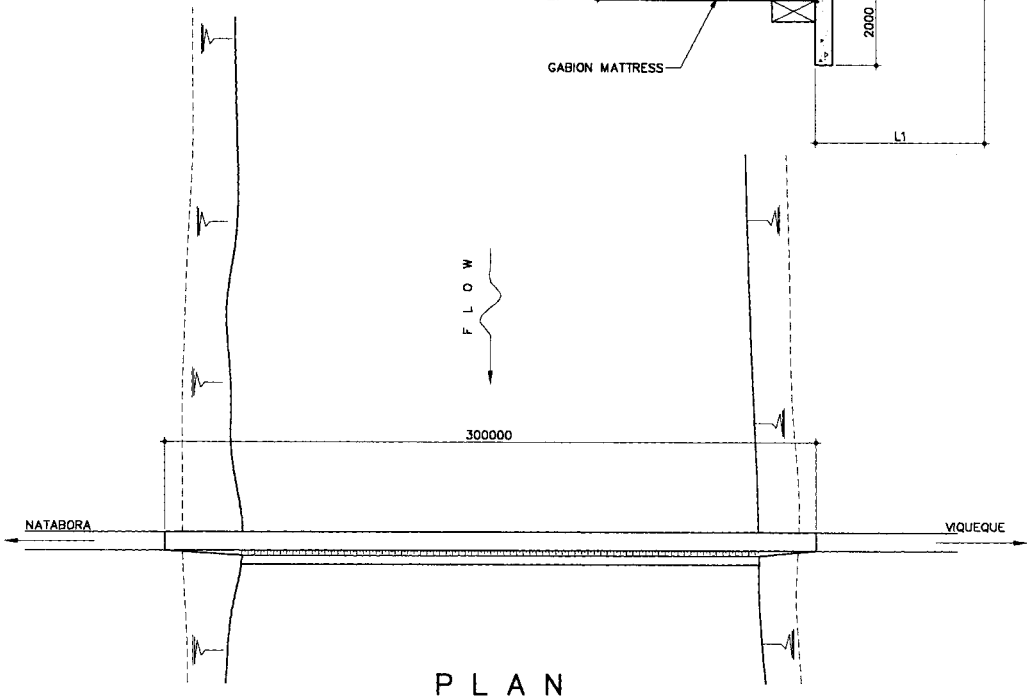

PLAN
SCALE 1:3000

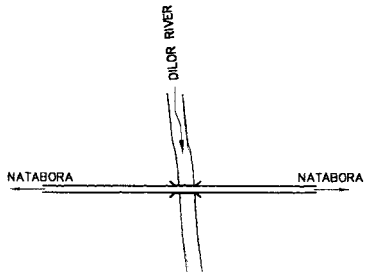

KEY PLAN (Km. 46.0)

UNITED NATIONS TRANSITIONAL ADMINISTRATION IN EAST TIMOR (UNTAET)	3 YEARS URGENT REHABILITATION WORK (VIQUEQUE-NATABORA)	TITLE: CONSTRUCTION OF NEW CAUSEWAY		JAPAN INTERNATIONAL COOPERATION AGENCY PACIFIC CONSULTANTS INTERNATIONAL NIPPON KOEI CO., LTD YACHIYO ENGINEERING CO., LTD.
		JULY, 2000	APP. 3.3.3- DRAWING No. 37	

REPAIRING OF BRIDGE
BRIDGE NO. 05 (VIQUEQUE-UATOLARI)

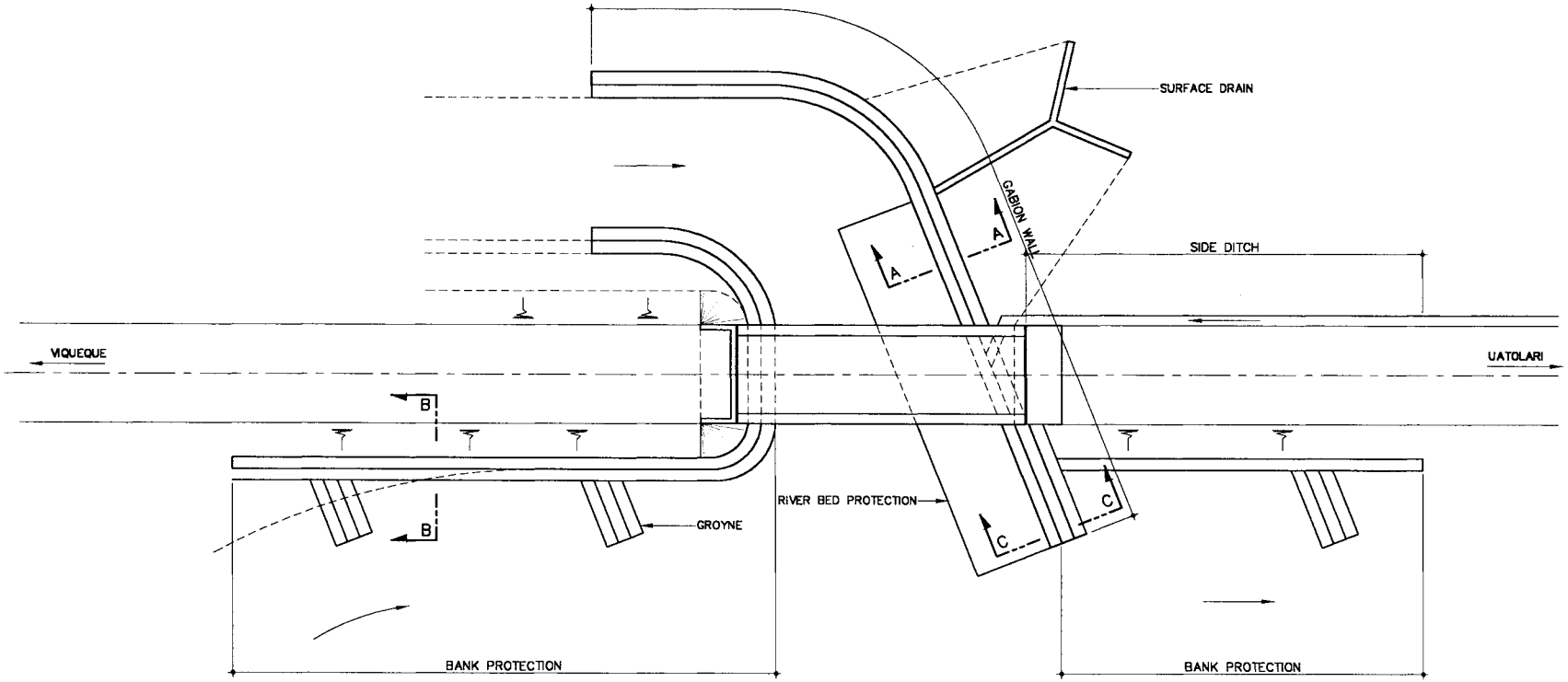

PLAN
SCALE 1:600

UNITED NATIONS TRANSITIONAL ADMINISTRATION IN EAST TIMOR (UNTAET)	3 YEARS URGENT REHABILITATION WORK (VIQUEQUE-UATOLARI)	TITLE: REPAIRING OF BRIDGE		JAPAN INTERNATIONAL COOPERATION AGENCY PACIFIC CONSULTANTS INTERNATIONAL NIPPON KOEI CO., LTD YACHIYO ENGINEERING CO., LTD.
		JULY, 2000	APP. 3.3.3- DRAWING No. 38	

CONSTRUCTION OF NEW CAUSEWAY
BRIDGE NO. 02 & 03 (LOSPALOS-UATOLARI)

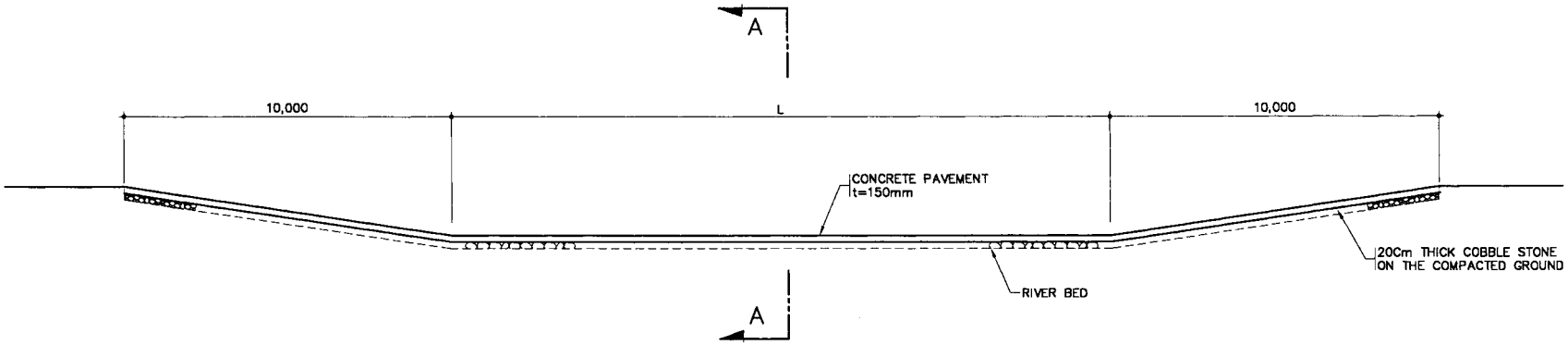

ELEVATION
SCALE 1:200

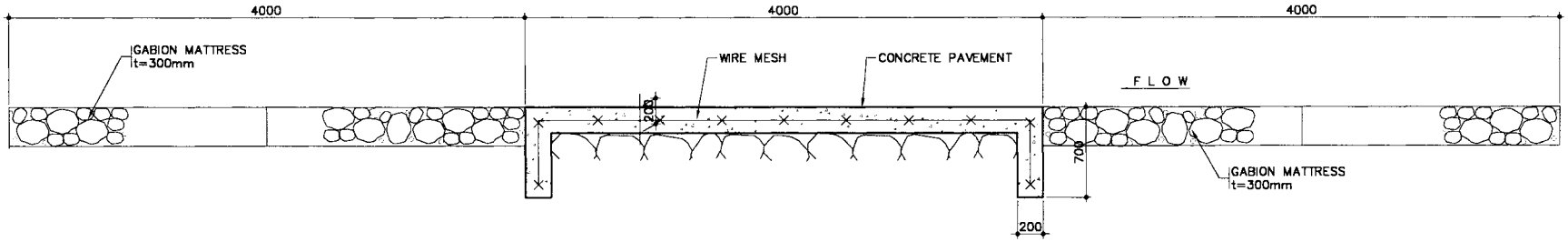

SECTION A–A
SCALE 1:50

UNITED NATIONS TRANSITIONAL ADMINISTRATION IN EAST TIMOR (UNTAET)	3 YEARS URGENT REHABILITATION WORK (LOS PALOS-UATOLARI)	TITLE: CONSTRUCTION OF NEW CAUSEWAY		JAPAN INTERNATIONAL COOPERATION AGENCY PACIFIC CONSULTANTS INTERNATIONAL NIPPON KOEI CO., LTD YACHIYO ENGINEERING CO., LTD.
		JULY, 2000	APP. 3.3.3- DRAWING No. 39	

CONSTRUCTION OF NEW CAUSEWAY
BRIDGE NO. 04 (LOS PALOS - UATOLARI ROAD)

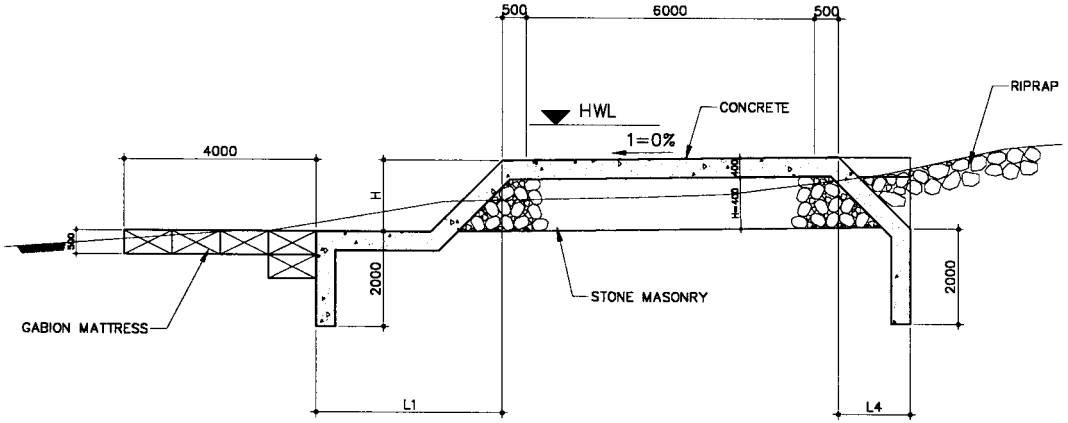

SECTION
SCALE 1:150

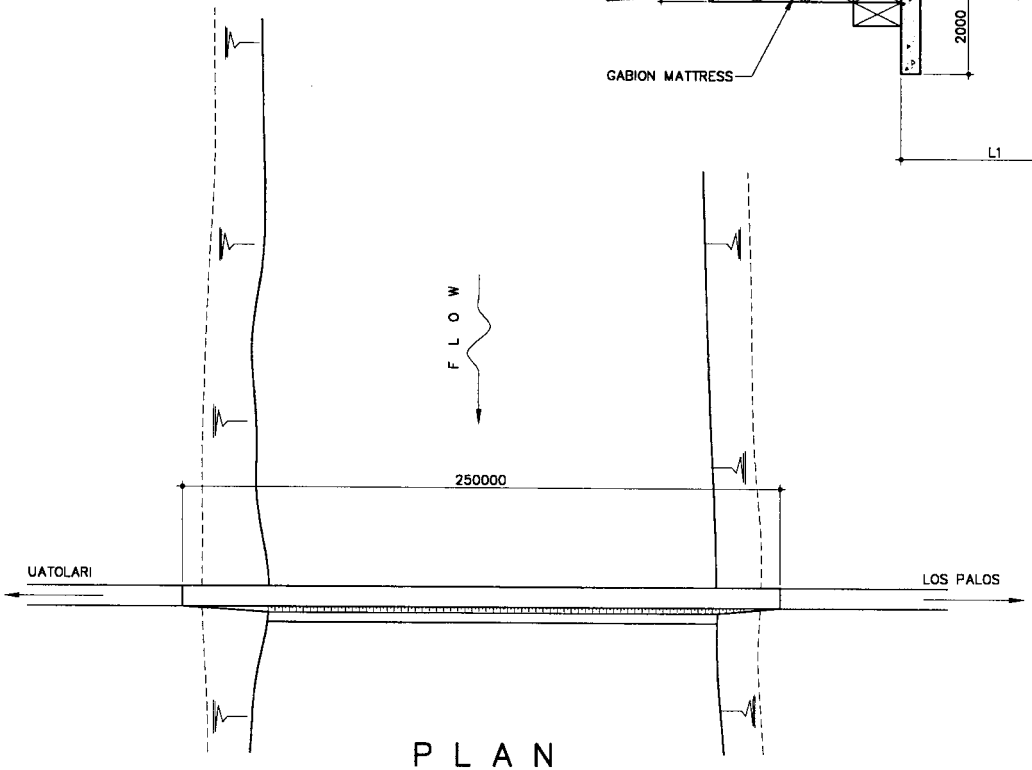

PLAN
SCALE 1:3000

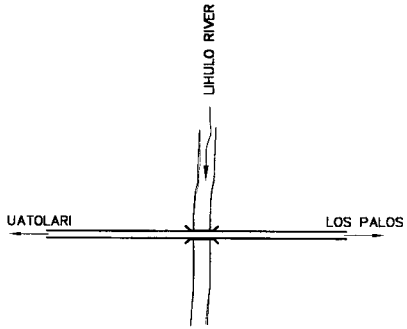

KEY PLAN

UNITED NATIONS TRANSITIONAL ADMINISTRATION IN EAST TIMOR (UNTAET)	3 YEARS URGENT REHABILITATION WORK (LOS PALOS-UATOLARI)	TITLE: CONSTRUCTION OF NEW CAUSEWAY		JAPAN INTERNATIONAL COOPERATION AGENCY PACIFIC CONSULTANTS INTERNATIONAL NIPPON KOEI CO., LTD YACHIYO ENGINEERING CO., LTD.
		JULY, 2000	APP. 3.3.3- DRAWING No. 40	

RECONSTRUCTION OF BRIDGE IN CRITICAL CONDITON
BRIDGE NO. 26 (MANATUTO-BAUCAU)

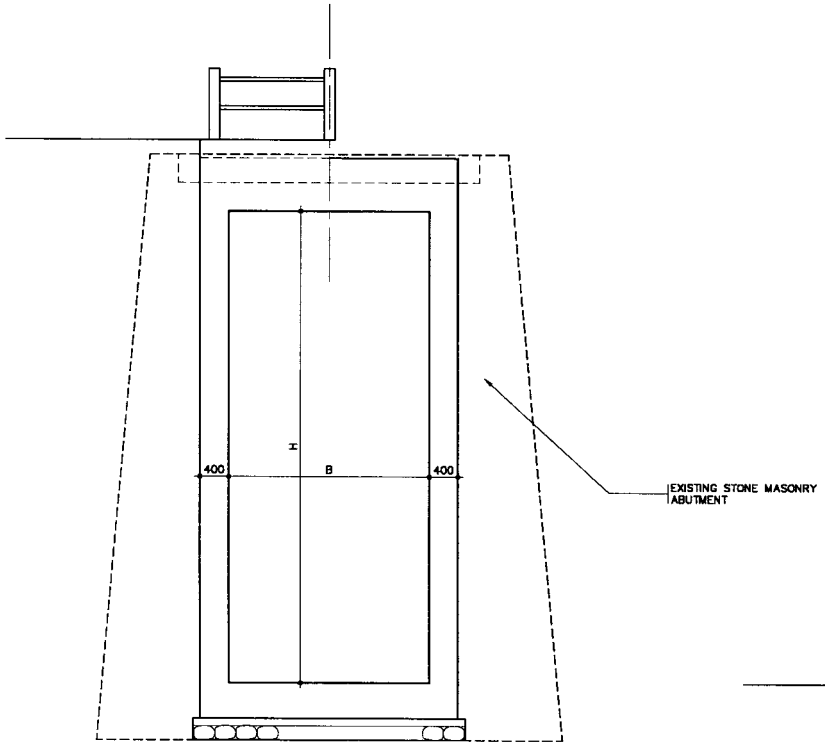

BRIDGE SECTION
SCALE 1:100

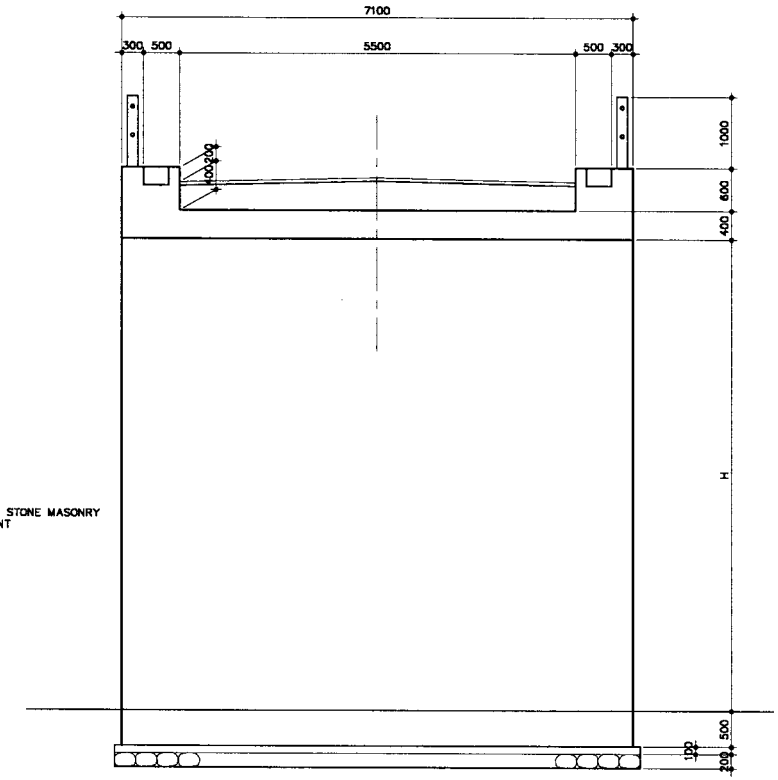

ELEVATION
SCALE 1:100

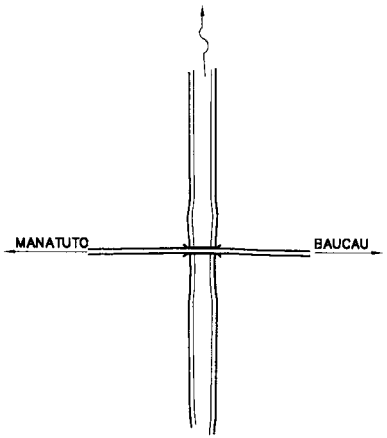

KEY PLAN (Km 107.0)

UNITED NATIONS TRANSITIONAL ADMINISTRATION IN EAST TIMOR (UNTAET)	3 YEARS URGENT REHABILITATION WORK (MANATUTO-BAUCAU)	TITLE: RECONSTRUCTION OF BRIDGE IN CRITICAL CONDITON		JAPAN INTERNATIONAL COOPERATION AGENCY PACIFIC CONSULTANTS INTERNATIONAL NIPPON KOEI CO., LTD YACHIYO ENGINEERING CO., LTD.
		JULY, 2000	APP. 3.3.3- DRAWING No. 41	

CONSTRUCTION OF NEW BRIDGE
BRIDGE NO. 04 (DILI CITY)

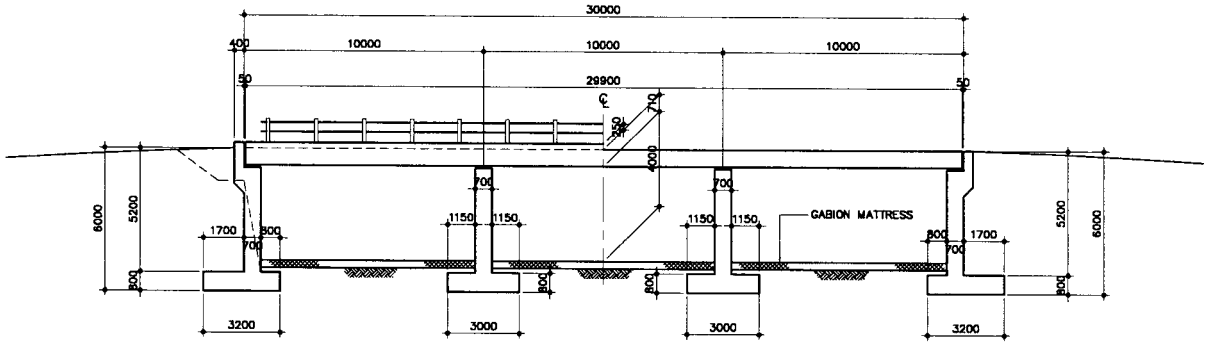

ELEVATION
SCALE 1:300

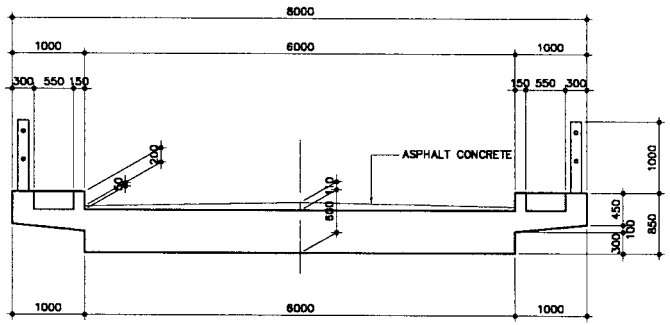

BRIDGE SECTION
SCALE 1:100

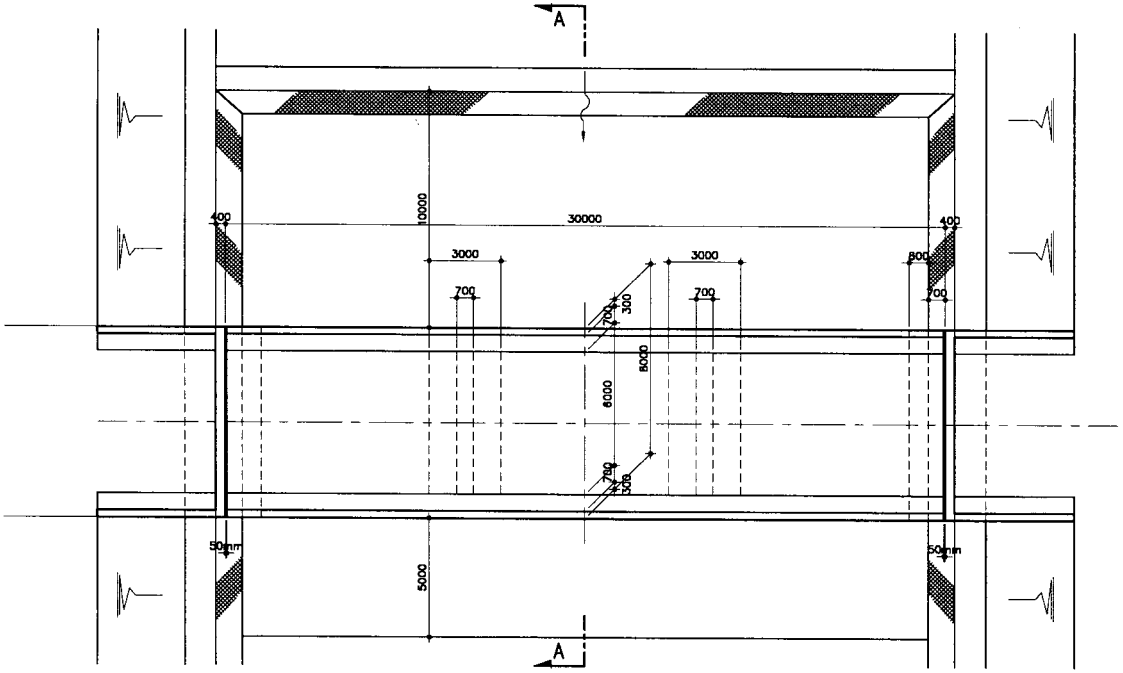

PLAN
SCALE 1:300

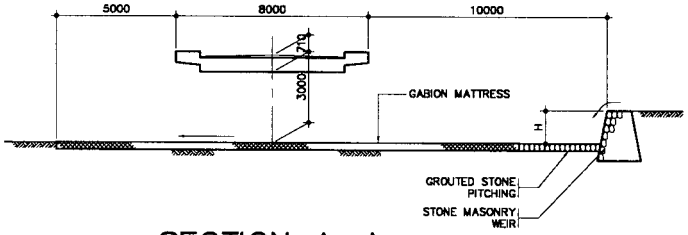

SECTION A–A
SCALE 1:300

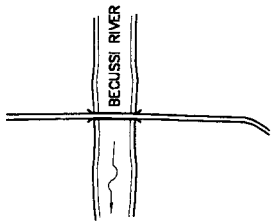

KEY PLAN

UNITED NATIONS TRANSITIONAL ADMINISTRATION IN EAST TIMOR (UNTAET)	3 YEARS URGENT REHABILITATION WORK (DILI CITY)	TITLE: CONSTRUCTION OF NEW BRIDGE		JAPAN INTERNATIONAL COOPERATION AGENCY PACIFIC CONSULTANTS INTERNATIONAL NIPPON KOEI CO., LTD YACHIYO ENGINEERING CO., LTD.
		JULY, 2000	APP. 3.3.3- DRAWING No. 42	