Technical Cooperation Program (TCP)

CALENDAR YEAR	1996				1997				1998				1999				00
JAPANESE FISCAL YEAR		1996				1997				1998				1999			
	IV	I	II	III	IV	I	II	III	IV	I	II	III	IV	I	II	III	IV
Term of Technical Cooperation																	
Length																	
1. Standard scale measurement (0.1-1,000mm)																	
1) Establishing																	
2) Maintaining																	
3) Intercomparison																	
2. Gauge block measurement by Interferometer (0.5mm-300mm)																	
1) Establishing																	
2) Maintaining																	
3) Intercomparison																	
3. Gauge block measurement (0.5mm-500mm) Comparison method																	
1) Establishing																	
2) Maintaining																	
4. Gauge measurement (0.1-1,000mm)																	
1) Establishing																	
2) Maintaining																	
5. Angle gauge measurement																	
1) Establishing																	
2) Maintaining																	
6. Polygon mirror measurement																	
1) Establishing																	
2) Maintaining																	
7. Outside diameter measurement (0.1mm-30mm)																	
1) Establishing																	
2) Maintaining																	
8. Inside diameter measurement (0.1mm-85mm)																	
1) Establishing																	
2) Maintaining																	
9. Screw measurement																	
1) Establishing																	
2) Maintaining																	
10. Roundness measurement																	
1) Establishing																	
11. Surface roughness measurement																	
1) Establishing																	
12. Three coordinate measurement																	
1) Establishing																	

---- : Scheduled
▬▬ : Implemented

Technical Cooperation Program (TCP)

CALENDAR YEAR	1996				1997				1998				1999				00
JAPANESE FISCAL YEAR		1996				1997				1998				1999			
	IV	I	II	III	IV	I	II	III	IV	I	II	III	IV	I	II	III	IV
Pressure																	
1. Pressure standards in the barometric & low pressure range (0.01kPa-200kPa)																	
1) Principle & operation of mercury & water manometers																	
2) Principle & operation of barometers																	
2. Pressure standards in the low pressure range (0.1kPa-2MPa)																	
1) Pressure-generating techniques																	
2) Principle & operation of gas-operated dead-weight pressure gauges																	
3) Intercomparison of gas-operated dead-weight pressure gauges																	
4) Calibration of liquid manometers against gas-operated dead-weight pressure gauges																	
3. Pressure standards in the moderate pressure range (0.5MPa-100MPa)																	
1) Moderate pressure generating techniques																	
2) Principle & operation of dead-weight pressure gauges																	
3) Intercomparison of dead-weight pressure gauges																	
4. Pressure standards in the high pressure range (1MPa-500MPa)																	
1) High pressure generating techniques																	
2) Principle & operation of dead-weight high pressure gauges																	
3) Intercomparison of dead-weight high pressure gauges																	
5. Vacuum pressure standards (0.01Pa-1kPa)																	
1) Vacuum generating techniques																	
2) Principle & operation of vacuum gauges																	
3) Principle & operation of McLeod gauges																	
6. Interferometric primary standard manometer																	
1) Theory & principles of operation																	
2) Technical advice on maintenance																	
3) Calibration procedure of gas-operated dead-weight pressure gauges																	

---- : Scheduled
▬▬ : Implemented

Technical Cooperation Program (TCP)

CALENDAR YEAR	1996				1997				1998				1999				00
JAPANESE FISCAL YEAR		1996				1997				1998				1999			
	IV	I	II	III	IV	I	II	III	IV	I	II	III	IV	I	II	III	IV
Electricity																	
1. DC Volt																	
1) Primary standard group calibration																	
2) Uncertainty Study																	
2-a)Range extension(0.1-1000V)																	
2-b)Calibration of multifunction calibrator																	
3) Intercomparison																	
2. Resistance																	
1) Primary standard group calibration(1-10kΩ)																	
1-a) List up & Calibration																	
2) Uncertainty study																	
2-a) Temperature coefficient																	
2-b) Range extension																	
3) Intercomparison																	
3. AC Voltage																	
1) Primary standard (Thermal converter)																	
2) DC-AC comparator calibration system																	
3) AC V/A calibrator calibration																	
4) Intercomparison																	
4. Instrument transformer(CT / VT)																	
1) Installation																	
2) Current Transformer calibration system																	
3) Voltage Transformer calibration system																	
5. Power & Energy (Watt-hour)																	
1) Installation																	
2) Power(W) meter calibration																	
3) Energy(Wh) meter Calibration																	
4) Intercomparison																	
4-a) Power Intercomparison																	
4-b) Energy Intercomparison																	
6. RF power																	
1) RF power meter calibration																	
1-a)Equipment performance check																	
1-b)Reflection coefficient & Loss																	
1-c) Uncertainty evaluation																	
2) Intercomparison																	
7. Attenuation																	
1) Attenuator calibration																	
2) Intercomparison																	
8. RF reflection coefficient																	
1) Network analyzer calibration																	
1-a) Evaluation of measuring equipment																	
1-b) 1-port reflection (2~18GHz)																	
1-c) 1/4 wave length technique (~2GHz)																	
2) Intercomparison																	

---- : Scheduled

▬▬ : Implemented

Technical Cooperation Program (TCP)

CALENDAR YEAR	1996				1997				1998				1999				00
JAPANESE FISCAL YEAR		1996				1997				1998				1999			
	IV	I	II	III	IV	I	II	III	IV	I	II	III	IV	I	II	III	IV
Vibration																	
1. Vibration standards in the medium frequency range (5Hz-10kHz)																	
1) Construction of Computer software for vibration calibration																	
2) Installation of primary vibration calibration system by laser interferometry																	
3) Establishing of national standards of vibration(Primary vibration calibration of 8305 by laser interferometry																	
4) Maintaining of national standards of vibration																	
5) International comparison technique with NRLM (Japan) and by APMP																	
6) Primary vibration calibration of 2270 and 2270M8 by laser interferometry																	
2. Vibration calibration by comparison methods																	
1) Comparison calibration by vibration standards of Denmark																	
2) Comparison calibration by vibration standards of Malaysia																	
3) Calibration of five pick-ups included in technical equipment																	
4) Calibration of charge amplifier																	
5) Calibration of capacitance of pick-up																	

---- : Scheduled

▬ : Implemented

ORGANIZATION CHART OF SIRIM BERHAD

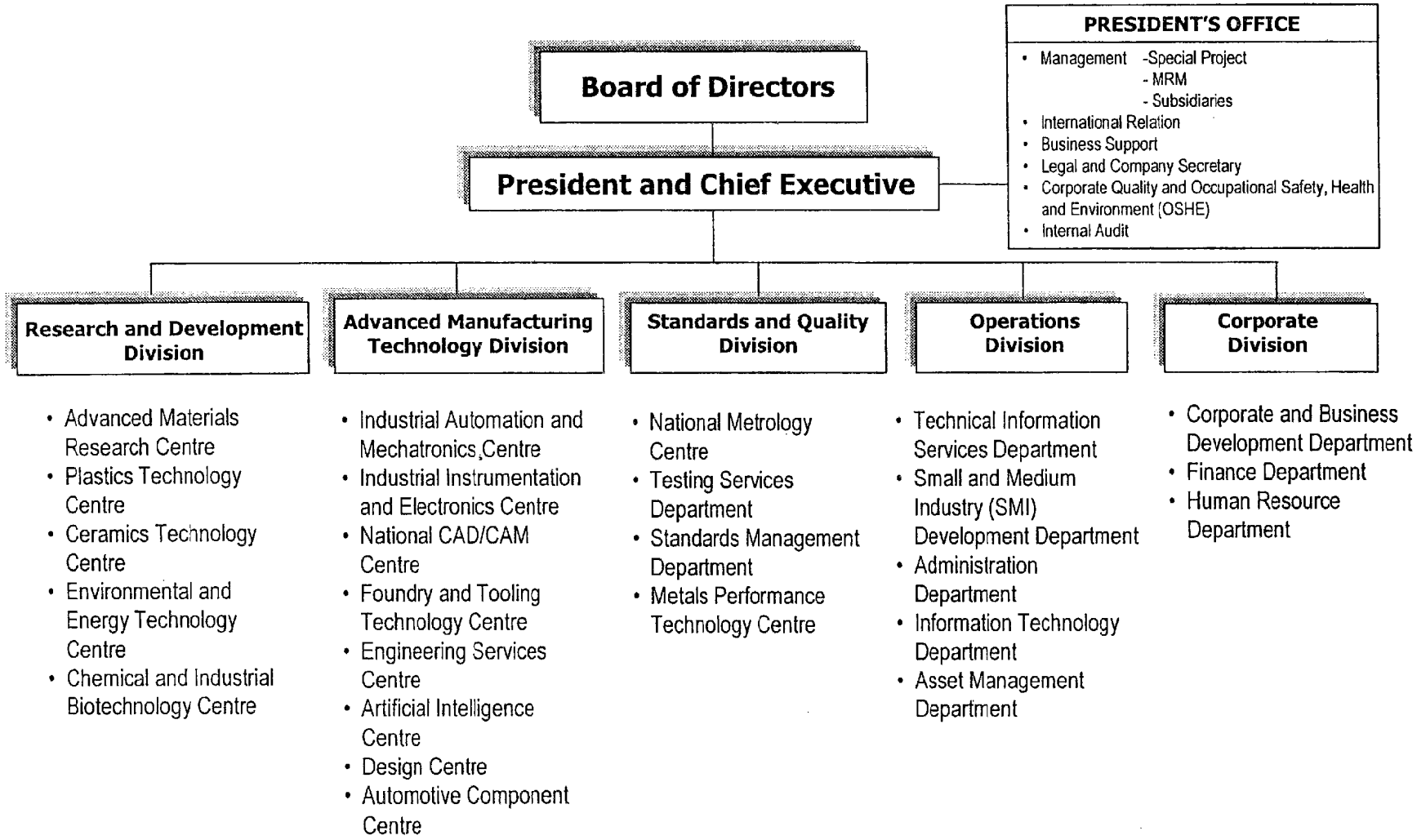

Date : 16 September 1999 (Corporate Planning & Development Section)

ANNEX 5-2 1/2

ORGANISATION CHART OF NATIONAL METROLOGY CENTRE

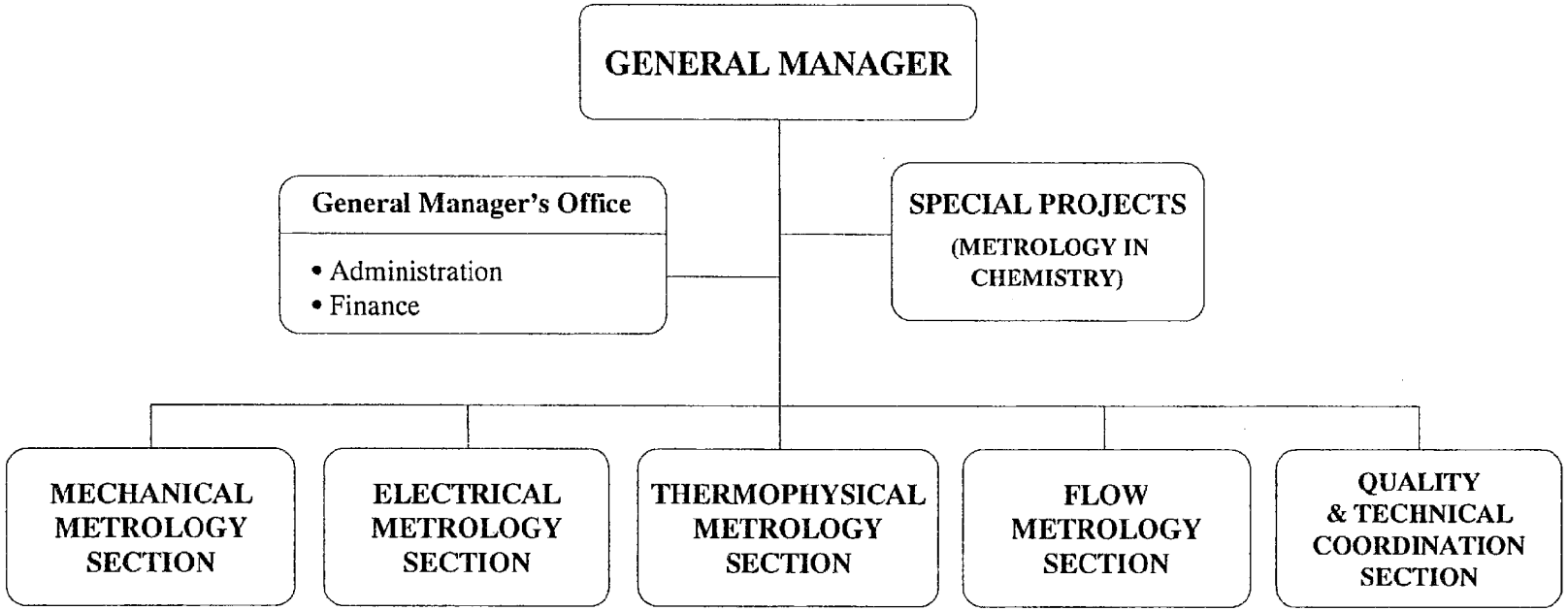

- Mass
- Length
- Force
- Pressure

- DC & Low Frequency
- RF & Microwave
- Time & Frequency
- Photometry & Opto electronics
- Applied Electricity & Magnetism
- Acoustics & Vibration

- Low & Medium Temperature
- High Temperature
- Hygrometry
- Material Properties

- Low Pressure Gas
- Medium & High Pressure Gas
- Static Liquid
- Dynamic Liquid

- Quality Management
- Technical Coordination
- Customer Service Affairs
- International Relation
- International Cooperation
- Promotion & Publication
- OSHE

NATIONAL METROLOGY CENTRE

Manpower Distribution as 26 Oct. 1999

GENERAL MANAGER
Md. Nor Md. Chik

General Manager's Office

Personal Assistant
1. Siti A'Azida Md Noh

Senior Administrative Assistant
1. Rosiah Jabar

Administrative Assistant
1. Zura Siron

Administrative Assistant
1. Velautham Renganathan

Special Project (Metrology in Chemistry)

Researcher
Osman Zakaria

Quality and Technical Coordination Section

Manager
Nik Rahini Nik Ishak

Senior Executive
1. Vacant

Executive
1. Vacant

Administrative Assistant
1. Anita Yusoff

Administrative Assistant
1. Laila Durum
2. Norzaila Adnan

Administrative Assistant
1. Seriyarti Ismail

Mechanical Metrology Section

Manager
Chen Soo Fatt

Senior Researcher
1. Wan Abd. Malik Wan Mohamed
2. Ahmad Makinuddin Dahlan*

Researcher
1. Yeoh Kew Huat
2. Muktar Sawi
3. Vacant
4. Vacant

Senior Assistant Researcher
1. Eng Fook Eng
2. Rahim Jamil

Senior Research Assistant
1. Norizan Mohd Yassin

Research Assistant
1. Junaidah Ali
2. Hasnah Mohd Joned

Electrical Metrology Section

Manager
Abdul Rashid Zainal Abidin

Senior Researcher
1. Mohd Nasir Zainal Abidin (Dr)

Researcher
1. Fadeli Hizam Shamsudin
2. Wan Aziz Wan Salleh
3. Siti Maryam Othman*
4. Siti Rahmah Abdul Karim
5. Md, Shahrumizan Mohd Zain
6. Nazri Marzuki
7. Mohd Nizam Abdullah
8. Vacant
9. Vacant

Senior Research Assistant
1. Mohd Nor Hashim

Technician
1. Wan Ab. Halim Wan Yusof

Research Assistant
1. Seek Seu Gan

Thermophysical Metrology Section

Manager
Hafidzah Othman

Researcher
1. Faridah Hussain
2. Irene Safinaz Hassan
3. Norhissham Mukhtar
4. Zailani Mahamood

Flow Metrology Section

Manager
Mohd Zin Hashim

Senior Researcher
1. Abdul Rahman Mohamed (Dr)
2. Raghavan Krishnan
3. Yeoh Wee Theng

Researcher
1. Vacant

Assistant Researcher
1. Sharifah Norsiha Syed Kamal

Senior Research Assistant
1. David J.J. Michael
2. Aminuddin Ahmad

Research Assistant
1. Zulkifli Mat
2. Ahmad Hussin
3. Mohamed Rizal Zakaria

*On study leave

ANNEX 6-1

Allocation of Counterpart Personnel

No.	Name of Counterparts	Title
	(Administration)	
	Mr. Woo Seng Khee (*1)	General Manager
1.	Mr. Md. Nor Md. Chik	General Manager
	Mr. Ong Chin Giap (*2)	Manager, Planning & Quality Section
2.	Mr. Md. Zin Hashim	Manager, Flow Metrology Section
3.	Ms Nik Rahini Nik Ishak	Manager, Quality & Technical Coordination Section
	(Length)	
	Mr. Ahmad Makinuddin (*3)	Senior Researcher
4.	Mr. Yeoh Kew Huat	Researcher
5.	Mr. Eng Fook Eng	Senior Assistant Researcher
6.	Ms Hasnah Md. Joned	Research Assistant
	(Electrical)	
7.	Mr. Abdul Rashid Zainal	Manager, Electric Metrology Section
8.	Dr. Md. Nasir Zainal	Senior Researcher
9.	Mr. Fadeli Hizam Shamsudin	Researcher
10.	Ms Siti Rahmah Abdul Karim	Researcher
	Dr. Wan Nor Liza Wan Mahadi (*1)	Researcher
11.	Mr. Nazri Marzuki	Researcher
12.	Mr. Mohd.Nizam Abdullah	Researcher
13.	Mr. Md. Nor Hashim	Senior Research Assistant
14.	Ms Seek Seu Gan	Research Assistant
	(Pressure)	
15.	Mr. Chen Soo Fatt	Manager, Mechanical Metrology Section
16.	Mr. Wan Abd. Malik Mohamed	Senior Researcher
	Ms Siti Zaleha Md. Nor	Researcher
17.	Mr. Muktar Sawi	Researcher
	Mr. Abdul Rahman Bakar (*4)	Researcher
	(Vibration)	
18.	Mr. Wan Aziz Wan Salleh	Researcher
19.	Mr. Md. Shahrunizam Md. Zain	Researcher

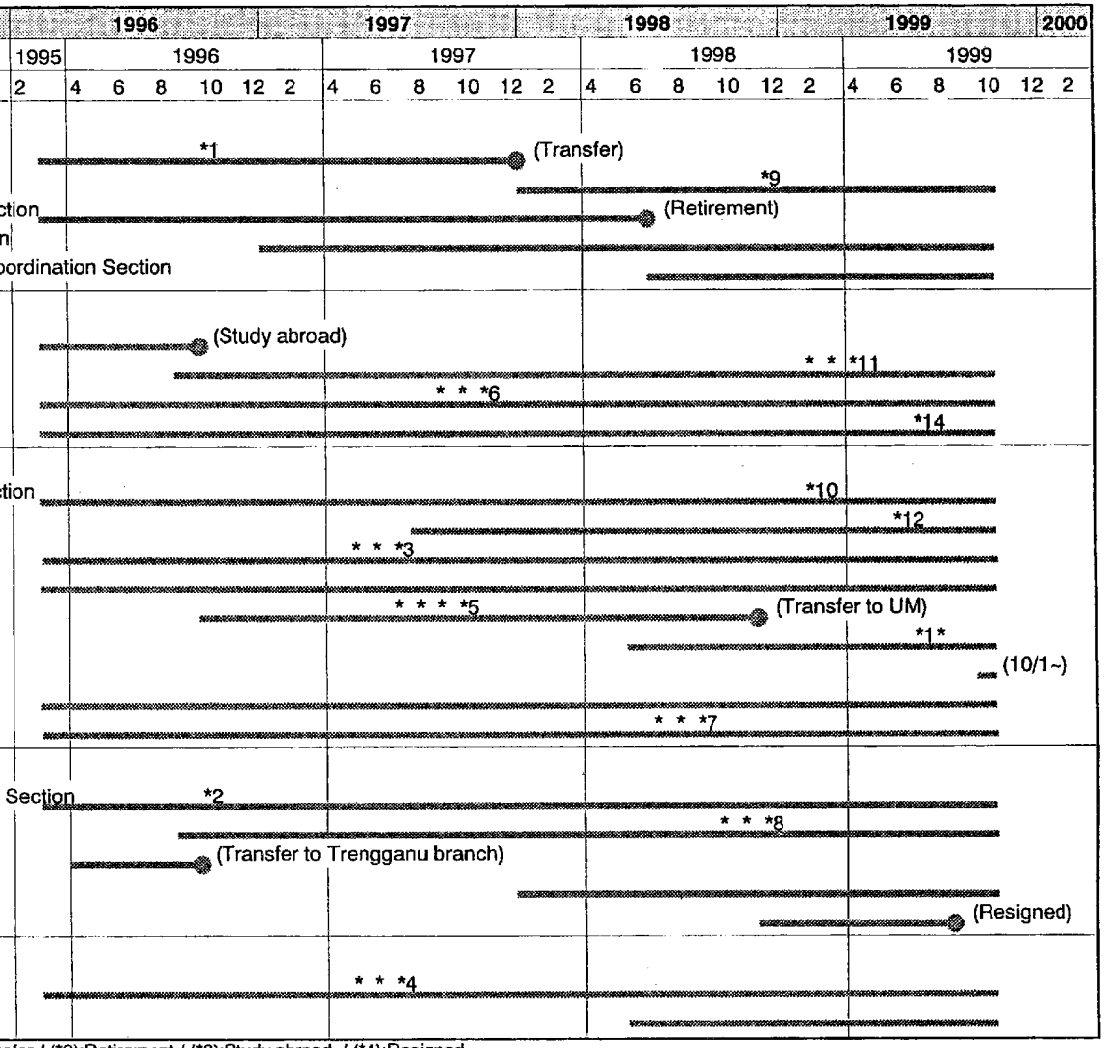

* : C/P Training in Japan / (*1):Transfer / (*2):Retirement / (*3):Study abroad / (*4):Resigned

ANNEX 6-2

Human Resorce Plan from 1999 to 2003

Category	1999	2000	2001	2002	2003
Engineer / Scientist	37	45	51	63	75
Supporting Staff (Technical & Non Technical)	19	19	23	23	25
Total	56	64	74	86	100

ANNEX 7-1

Budget Plan of NMC for Malaysian Fiscal Year from 1996 to 1999

(Million Malaysian Ringgit)

Item	1996			1997			1998			1999			96-'99
	Requested	Allocated	Actual	Requested	Allocated	Actual	Requested	Allocated	Actual	Requested	Allocated	Actual	Total
												(as of '99/10/25)	
1. Operational Budget (Emolument & General and Administration)	2.204	2.240	1.869	2.785	2.785	2.081	3.000	3.000	2.435	5.211	3.628	1.989	8.374
2. Capital Budget (*1)													
(a) Building	7.000	7.000	0.000	4.500	4.500	0.000	6.000	6.000	0.000	4.500	4.500	0.213	0.213
(b) Equipment	2.570	2.570	0.374	1.500	1.500	0.396	3.500	3.500	1.757	3.000	4.000	2.986	5.513
3. R & D Budget (*2)	0.000	0.000	0.000	1.200	1.200	0.000							
Total	11.774	11.810	**2.243**	9.985	9.985	**2.477**	12.500	12.500	**4.192**	12.711	12.128	**5.188**	**14.100**

Note: Malaysian fiscal year starts in January and ends in December
Some of capital budget (i.e: Equipment) for 1999 was carried over from the balance of 1998's capital budget.

(*1) : RM.65 Million is secured in the 7th Plan(1996-2000) and can be carried over to 2001 in the 8th Plan(2001-2005)

(*2) : After corporatization of SIRIM, R&D budget not applicable.

ANNEX 7-2

Badget Plan of NMC from 2000 to 2003

(Thousand RM.)

Year	2000	2001	2002	2003	Total
(A) Operational Budget -Emolument	2,530	2,700	3,050	3,290	11,570
-General & Administratve	1,500	2,500	2,500	2,800	9,300
Sub Total	4,030	5,200	5,550	6,090	20,870
(B) Capital Budget (Technical Equipment)	5,000	6,000	8,000	10,000	29,000
Total	**9,030**	**11,200**	**13,550**	**16,090**	**49,870**

ANNEX 8 1/2

List of International Comparison

Field	Standards (Transfer Standards)	Period	Organizer	Coordinate Country	Coordinate Laboratory	Participants	Publication et al	within Project Period
Length	Line Scale 500mm	1997.8-1999.2	APMP	Japan	NRLM	NRLM, NML, PSB, KRISS, JQA, CMS, DSS, NPL, SIRIM, HKSCL	to be published	O
	633nm He-Ne Iodine Stabilized Laser	1998.8.24-27	APMP	Malaysia	SIRIM	NRLM, MSL, SIRIM, PSB, CMS, HKSCL	to be published	O
	Block Gauge	1999.9-	APMP	Japan	NRLM	Yet not to be finalized		O
Mass(*1)	Non-Automatic Weighing Instrument	On-going	APLMF	Australia	NML	Australia, Canada, China, Indonesia, Japan, Korea, Malaysia, New Zealand, Papua New Guinea, Taiwan, Vietnam, USA, UK, Germany		O
	1 kg Standard	1999.7-	APMP	Thailand	NIMT	Yet to be finalized		
Pressure	Dead Weight Tester (Piston Cylinder Assemblies)	1998.2-1998.8	APMP	Australia	NML	SIRIM, VMI, TISTR, ITDI	to be published	O
	Dead Weight Tester (Piston Cylinder Assemblies)	1998.10.1-1999.9.1	APMP	India	NPL	MSL, NML, KRISS, SCL, NMC(Malaysia), NMC(Singapore), NIMT, NRLM, NPSL, NIS, ITDI	to be published	O
Vibration	Calibration Technique of Accelerometers (Accelerometer)	1997.2	APMP	Taiwan	CMS/ITRI	CMS/ITRI, KRISS, NPL, NRLM, PSB, SIRIM, NML	to be published	O
	Accelerometer	1999.3-5	SIRIM	Malaysia	SIRIM	Japan(JQA), Malaysia	Report	O
	Accelerometer	1998.5	SIRIM	Malaysia	SIRIM	Japan(NRLM), Malaysia	Report	O
Electricity	DC Voltage	1985	CSC	India	NPL	NML, NPL, SIRIM, Mauritius, New Zealand, Papua New Guinea, Singapore, Republic of Korea	CSC(85)ISP-6 CSC(87)ISP-25	
	DC Voltage	1985.10	CSC	Australia	NML	NML, China, India Indonesia, Malaysia, Mauritius, New Zealand, Papua New Guinea, Singapore, Korea, Sri Lanka, Thailand	CSC(86)ISP-16	
	DC Resistance	1981.9-1984.7	CSC	NewZealand		Australia, Malaysia, Singapore, Korea, India, Sri Lanka, Mauritius, New Zealand	CSC(86)ISP-17	
	DC Voltage	1985.11	ETL	Japan	ETL	Japan, Malaysia	Report	
	DC Resistance	1985.11		Japan	ETL	Japan, Malaysia	Report	
	AC Voltage and Current	1984.2-5	ETL	Australia	NML	Australia, Canada, China, India, Japan, New Zealand, Korea, USA, UK, West Germany	Report	
	AC Voltage and Current	1986	APMP	Australia	NML	Australia, China, India, Indonesia, Korea, Malaysia, New Zealand, Papua New Guinea, Singapore, Thailand	APMP-TR-1-92	
	DC Voltage	1993.2	APMP	Singapore	PSB	Brunei, Indonesia, Malaysia, Philippines, Singapore, Thailand	Report	
	DC Voltage	1993.8	APMP	Singapore	PSB	Brunei, Indonesia, Malaysia, Philippines, Singapore, Thailand	Report	
	Capacitance	1994	APMP	Korea	KRISS	Australia, China, Hong Kong, India, Japan, Korea, Malaysia,	APMP-TR-1-94	

ANNEX 8 2/2

List of International Comparison

Field	Standards (Transfer Standards)	Period	Organizer	Coordinate Country	Coordinate Laboratory	Participants	Publication et al	within Project Period
Electricity	DC Voltage	1994.5	APMP	Singapore	PSB	Brunei, Indonesia, Malaysia, Philippines, Singapore,	Report	
	DC Voltage	1996.3	APMP	Singapore	PSB	Brunei, Indonesia, Malaysia, Philippines, Singapore,	Report	
	DC Voltage	1996.4	APMP	Singapore	PSB	Brunei, Indonesia, Malaysia, Philippines, Singapore,	Report	O
	DC Voltage	1999.3	SIRIM	Malaysia	SIRIM	SIRIM, ETL(Japan)	Report	O
	DC Resistance	1999.3	SIRIM	Malaysia	SIRIM	SIRIM, ETL(Japan)	Report	O
	Time	1999.5	APMP	Australia	NML	Australia, Malaysia, New Zealand, Philippines, Thailand, Vietnam,	to be published	O
	Power/Energy	1999.5	SIRIM	Malaysia	SIRIM	Australia, Malaysia	to be published	O
	Luminous Responsibility	1999.5	APMP	Malaysia	SIRIM	Australia, Malaysia	to be published	O
Humidity (R.H.)(*2)	Constant Humidity Generator (DewPoint Hygrometer)	1999.8-	APMP	Singapore	PSB	NRLM, NRCCRM, KRISS, SIRIM, ITRI, HKSCL, NML	to be published	O

*1: Related to the Pressure Standards *2: Related to the Length and Electricity Standards

BSTI :	Bangladesh	Bangladesh Standards and Testing Institution
CMS(ITRI) :	Chinese Taipei	Center for Measurement Standards, Industrial Technology Research Institute
DSS :	Thailand	Department of Science Service
HKSCL :	Hong Kong	Hong Kong Standards and Calibration Laboratory
ITDI :	Philippines	Industrial Technology Development Institute
KIM-LIPI :	Indonesia	Puslitan Kalibrasi Instrumentasi dan Metrologi, Lembaga Ilum Pengetahuan Indonesia
KRISS :	Republic of Korea	Korea Research Institute for Standards and Science
MSL(IRL) :	New Zealand	Measurement Standards Laboratory, Industrial Research Limited
MTC :	Fiji	Ministry of Trade and Commerce
MUSSD :	Sri Lanka	Measurement Unit, Standards and Service Department
NBSM :	Nepal	Nepal Bureau of Standards and Metrology
NIM :	China	National Institute of Metrology
NISIT :	Papua New Guinea	National Institute of Standards and Industrial Technology
NMC(SIRIM) :	Malaysia	National Metrology Center, SIRIM
NML(CISRO) :	Australia	National Measurement Laboratory, CSIRO
NPL :	India	National Physical Laboratory
NPSL :	Pakistan	National Physical and Standards Laboratory
NRLM :	Japan	National Research Laboratory of Metrology
PSB :	Singapore	Singapore Productivity and Standards Board
TISTR :	Thailand	Thailand Institute of Scientific and Technological Research
VMI :	Vietnam	Vietnam Metrology Institute

ANNEX 9 1/11

List of Measurement Standards of NMC -Mechanical Metrology Section-

LENGTH LABORATORY

NO.	NAME OF EQUIPMENT	CONTROL NO.	MAKER	MODEL	SERIAL NO.	DATE CAL.
1	Gauge Block set Grade 00,1.0005-100mm, Type Ceramic 112pcs	449DL001	TESA	M112	16208	27.11.92
2	Gauge Block set Grade 00, 1.0005 -100mm, Type: Tungsten Carbide 112pcs	449DL002	TESA	M112/1	301665	27.11.99
3	Gauge Block set Grade 00, 1.0005-100mm, type:Steel, 112pcs	449DL003	Mitutoyo	516-937	183264	
4	Gauge Block set Grade 00, 0.991-0.999(0.001mm step)	449DL004	TESA		199	
5	Digital Electronic Gauge Block comparator	449DL005	Tsugami	Nil	3144	
6	Length Comparator (1m)	449DL006	Kansai Seiki	N/a	901001	
7	Temperature-Humidity Recorder	449DL007	Chino	HNU	HNU28U028	
8	Automatic Gauge Block Interferometer	449DL008	TESA	AGI 1/300	18	
	Barometric Pressure Indicator		Druck	DPI 141	280/95-8	15.8.95
	Condensation hygrometer		Protimeter	DP989-P	500023	16.9.95
	Standard Resistor		Tinsley	5685A	269849	18.7.97
	Platinun Resistance Thermometer			Pt100	151213/1,/2,/3	13.6.95
9	Toolmakers microscope	449DL009	Mitutoyo	TM-111	41163	29.6.98
10	Autocollimator with adjustable stand	449DL010	Nikon	6D	72939 19863	
11	Autocollimator with adjustable stand	449DL011	Nikon	6D	74105 19121	
12	Flat Plate	449DL012	Fujita	N/a	841011	
13	Precision Polygon (12 side)	449DL013	Nikon	N/a	7511	
14	Indexing table 7.5deg	449DL014	BallDex	BM-20H	NIL	
15	Precision Indexing table(0.5min)	449DL015	Tsugami		219	
16	Black Granite Surface Plate grade O(8um)	449DL016	Mitutoyo	517-309	880007	
17	Angle Gauges	449DL017	Tsugami		11648	
18	Co-ordinate Measuring Machine	449DL018	Mitutoyo	F 805	840681	6.7.99
19	Long Gauge Block set Grd.K	449DL019	TESA		102506	25.3.96
20	Thin Gauge Block set Grd.K	449DL020	TESA		199	4.5.96
21	Angle Gauge Block set (15pieces)	449DL021	TESA	N/a	102299	8.3.96
22	Universal Monochromatic Lamp	449DL022	TESA	N/a	o/f 102258	
23	Single Axis Universal Measuring Machine	449DL023	SIP	1002M	1006	9.10.95
24	Tool makers flat	449DL024	Tesa		102382	
25	Laser scan micrometer	449DL025	Mitutoyo	LSM-3100/ LSM-105V	CC610427	

ANNEX 9 2/11 **List of Measurement Standards of NMC -Mechanical Metrology Section-**

NO.	NAME OF EQUIPMENT	CONTROL NO.	MAKER	MODEL	SERIAL NO.	DATE CAL.
26	Graplate 1000x1000mm	449DL026	Mitutoyo	517-109	N/a	
27	Optical parallel (4pcs)	449DL027	Mitutoyo	157-903	N/a	
28	Standard glass scale (500mm)	449DL028	Mitutoyo			
29	Standard glass scale (250mm)	449DL029	Mitutoyo			
30	Quartz thermometer	449DL030	Tokyo Denpa	DMT-610B	13120	4.11.97
31	Digital Manometer	449DL031	Yokogawa	MT110	07DT4018	
32	Long gauge block (8 pieces)	449DL032	Mitutoyo	BM-8R-0	973184	3.4.97
33	Long gauge block (1000mm)	449DL033	Mitutoyo		970014	4.4.97
34	Gauge block (103 pcs) - grade 00	449DL034	Mitutoyo	516-941	972681	4.4.97
35	Laser Diffraction Measuring System	449DL035	Tokyo Seimitsu	L-DS-P07	A59008DM	
36	Temperature humidity recorder	449DL036	Sato	NSII -Q	1100083	
37	Hygro-thermograph	449DL037	Sato	Sk-RHG	12732	
38	Digital height gauge	449DL038	Mitutoyo	HDF-600	9000104	
39	Took maker's flat, 130mm	449DL039				
40	Optical parallel (4 pieces)	449DL040	Mitutoyo	OP-25		
41	Gauge block (9-pieces)	449DL041	Tsugami	B-7	9756	
42	Gauge block (9-pieces)	449DL042	Tsugami	B-8	9759	
43	Laser Diffraction Measuring System	449DL043	Tokyo Seimitsu	DV-100A	A59008DM	
44	Temperature Humidity Recorder	449DL044	Sato	NS	1100083	
45	Gauge block accessories	449DL045	TESA	M18	105045	
46	Laser Scan Micrometer	449DL046	Mitutoyo	LSM-403V, LSM-3100	JD510158	
47	Internal Diameter Measuring Machine	449DL047	Issoku	IDM-85	29	
48	Pin type roller	449DL048	Issoku	1,1.5,2.0,1.5,3.0,4.0, 5.0mm		2.11.98
49	Circular cylinder type roller	449DL049	Issoku	10,15,20,25, 26,30mm		2.11.98
50	Mu checker	449DL050	Mitutoyo	M403	1000503	
51	Screw thread limit gauge	449DL051	Issoku	1 set of 4		
52	Taper screw thread gauge	449DL052	Issoku	1 set of 3		
53	Taper gauge	449DL053	Issoku	NT N040		
54	Master gauge - ring (30,50mm-2pc each)	449DL054	Issoku			
55	Standard Linescale (1000mm)	449DL055	Tsugami	Nil	78101	5.2.99

ANNEX 9 3/11 List of Measurement Standards of NMC -Mechanical Metrology Section-

NO.	NAME OF EQUIPMENT	CONTROL NO.	MAKER	MODEL	SERIAL NO.	DATE CAL.
56	Humidity and Temperature Transmitter	449DL056	Vaisala	HMP233	T4910031	26.4.99
57	Hybrid recorder	449DL057	Yokogawa	DR 130	7700GE626	
58	Square gauge block grade 1	449DL058	Mitutoyo	516-439	981336	12.2.98
59	Measuring microscope	449DL059	Mitutoyo	176-503E	810101	28.6.99
60	Optical flat	449DL060	Mitutoyo	158-118		
61	Gear check master	449DL061	Mitutoyo	515-762		
62	Ring gauge (1,5,50,80mm)	449DL062	Mitutoyo		970101,971151, 970671, 970287	
63	Square gauge block grade 2	449DL063	Mitutoyo	516-444	978925	13.10.97
64	Sine-bar	449DL064	Tsugami	T-SI	30225	
65	Temperature-Humidity Recorder	449DL065	Chino	HNU	HNU28U030	26.3.98
66	Laser Diffraction Measuring System	449DL066	Tokyo Seimitsu	DV-100MR	A59007CP	
67	Gauge block accessories for square block gauge	449DL067	Mitutoyo	516-612	981849	12.2.98
68	Gauge block accessories for long block gauge	449DL068	Mitutoyo	516-605	980592	

LASER LABORATORY

NO.	NAME OF EQUIPMENT	CONTROL NO.	MAKER	MODEL	SERIAL NO.	DATE CAL.
1	Multimeter	449LL0001	Hewlett-Packard	34401A	3146A61428	8/13/98
2	Iodine-stabilised 633 nm He-Ne laser system	449LL0002	NPL, UK	-	08A01/R12	Absolute
3	Iodine-stabilised 633 nm He-Ne laser system	449LL0003	NPL, UK	-	08A01/R13	Absolute
4	Frequency counter	449LL0004	Racal-Dana	1998	4935	8/17/98
5	Dual frequency laser interferometer.	449LL0005	Carl Zeiss	ZLM 500	100162	6/15/99
6	500 mm standard glass scale	449LL0006	Mitutoyo	HL-500	95388	3/15/97
7	Optical power meter	449LL0007	Newport	840-C	2144	6/16/97
8	Photodetector	449LL0008	Newport	818-SL	7101	6/16/97
9	2-D image processing CMM	449LL0009	Sokkia	SMIC-800	6188	6/14/99
10	Hybrid recorder	449LL0010	Yokogawa	DR130	7700GE627	
11	Humidity and temperature transmitter	449LL0011	Vaisala	HMP233	T4910032	

ANNEX 9 4/11 List of Measurement Standards of NMC -Mechanical Metrology Section-

PRESSURE LABORATORY

NO.	NAME OF EQUIPMENT	CONTROL NO.	MAKER	MODEL	SERIAL NO.	DATE CAL.
1	Gas-operated DWPG, 7 MPa (1,000 psi)	449PL001	Ruska	2465-754	48247	9/2/95
2	Oil-operated DWPG, 138 MPa (20,000 psi)	449PL002	Desgranges E. H.	5301	6585	6/8/95
3	Oil-operated DWPG, 500 MPa (73,000 psi)	449PL003	Desgranges E. H.	5306	6581	6/8/95
4	Gas-operated DWPG, 40 MPa (5,800 psi)	449PL004	Desgranges E. H.	5202	6589	6/14/95
5	300 MPa controlled-clearance DWPG	449PL005	Nagano Keiki	PD016	60410	8/27/97
6	Digital piston pressure gauge	449PL006	DH Instruments	22000M	7249	3/27/97
7	200 kPa gas-operated DWPG	449PL007	Futaba Keiki	AV-02	377	4/5/97
8	500 kPa gas-operated DWPG	449PL008	Futaba Keiki	AP-01	376	4/5/97
9	500 kPa gas-operated DWPG	449PL009	Nagano Keiki	PD82/PD89	60490	2/19/97
10	5 MPa oil-operated DWPG	449PL010	Nagano Keiki	PD66	70419	1/23/98
11	50 MPa oil-operated DWPG	449PL011	Nagano Keiki	PD66	60475	2/28/97
12	Digital high pressure gauge	449PL012	Tsukasa-Sokken	UHP-808	M-1	5/22/97
13	McLeod vacuum gauge calibration system	449PL013	Okano Works	VP-AM, MC-100SR	9704, 7452	4/9/97
14	Pirani vacuum gauge	449PL014	Okano Works	PGA-1S	75086	4/15/97
15	Ionization vacuum gauge	449PL015	Okano Works	IV-7D	13367	4/15/97
16	Rotary Mcleod vacuum gauge	449PL016	Okano Works	New S'	F19672	1/18/97
17	Fortin barometer	449PL017	Tokyo-Suzuki	M10-S	K12308	4/21/97
18	Standard water manometer	449PL018	Nagano Keiki	PM26, PM43	Y00901	4/22/97
19	Standard mercury manometer	449PL019	Nagano Keiki	PM26, PM43	Y00716	3/6/97
20	Precision differential pressure gauge	449PL020	MKS Baratron	270D-5, 698A11TRB	59114, 65282	2/27/97
21	10 kPa digital pressure gauge	449PL021	Yokogawa	MT110-265231	27DT0036D	4/3/97
22	130 kPa digital pressure gauge	449PL022	Yokogawa	MT110-265242	27DT4017D	4/3/97
23	3 MPa digital pressure gauge	449PL023	Yokogawa	MT110-265234	27DT3014D	4/3/97
24	130 kPa digital pressure gauge	449PL024	Yokogawa	MT110-265242	26DT4015	

ANNEX 9 5/11 List of Measurement Standards of NMC -Electrical Metrology Section-

AC/DC Laboratory AC/DC Difference Measurement Facility

NO	NAME OF EQUIPMENT	CONTROL NO.	MAKER	MODEL	SERIAL NO.	DATE CAL.	DATE DUE
1	Thermo-element 2.5 mA	446/ACDC/001	Holt	90081A	943500000347		
2	Thermo-element 5 mA	446/ACDC/002	Holt	90081B	943500000348		
3	Thermo-element 10 mA	446/ACDC/003	Holt	90081C	943500000349		
4	Thermo-element 2.5 mA	446/ACDC/004	Holt	90081A	943500001297		
5	Thermo-element 5 mA	446/ACDC/005	Holt	90081B	943500001298		
6	Thermo-element 10 mA	446/ACDC/006	Holt	90081C	943500001299		
7	Thermo-element 2.5 mA	446/ACDC/007	Holt	90081A	943500001387		
8	Thermo-element 2.5 mA	446/ACDC/008	Holt	90081A	943500001390		
9	Thermo-element 5 mA	446/ACDC/009	Holt	90081B	943500001388		
10	Thermo-element 5 mA	446/ACDC/010	Holt	90081B	943500001391		
11	Thermo-element 10 mA	446/ACDC/011	Holt	90081C	943500001389		
12	Thermo-element 10 mA	446/ACDC/012	Holt	90081C	943500001392		
13	Thermo-element Module 10 mA	446/ACDC/013	ETL	-	10591-84		
14	Thermo-element Module 5 mA	446/ACDC/014	ETL	-	55913-84		
15	Thermo-element Module 5 0mA	446/ACDC/015	ETL	-	55914-84		
16	Coaxial TVC - Resistor Module 12V	446/ACDC/016	Holt	90080A	943500000342		
17	Coaxial TVC - Resistor Module 40V	446/ACDC/017	Holt	90080B	943500000343		
18	Coaxial TVC - Resistor Module 120V	446/ACDC/018	Holt	90080C	943500000344		
19	Coaxial TVC - Resistor Module 400V	446/ACDC/019	Holt	90080D	943500000345		
20	Coaxial TVC - Resistor Module 1200V	446/ACDC/020	Holt	90080E	943500000346		
21	Coaxial TVC - Resistor Module 12V	446/ACDC/021	Holt	90080A	943500001292		
22	Coaxial TVC - Resistor Module 40V	446/ACDC/022	Holt	90080B	943500001293		
23	Coaxial TVC - Resistor Module 120V	446/ACDC/023	Holt	90080C	943500001294		
24	Coaxial TVC - Resistor Module 400V	446/ACDC/024	Holt	90080D	943500001295		
25	Coaxial TVC - Resistor Module 1200V	446/ACDC/025	Holt	90080E	943500001296		
26	TVC Resistance Module - 10k	446/ACDC/034	ETL	-	10K-84		
27	Power Amplifier	446/ACDC/035	Fluke	5205A	292181		
28	Programmable AC Calibrator	446/ACDC/036	Fluke	5200A	5385004		
29	Nanovoltmeter	446/ACDC/037	Keithley	181	410595		
30	Nanovoltmeter	446/ACDC/038	Keithley	181	416280		
31	AC/DC Transfer Standard	446/ACDC/039	Fluke	792A	6795003		
32	1000V Range Resistor	446/ACDC/041	Fluke	792A-7002	6795003		
33	DVM	446/ACDC/044	Keithley	182	658060		
34	DVM	446/ACDC/045	Keithley	182	658061		
35	Quartz Thermometer	446/ACDC/047	DMT	DMT-610B	13119	02/10/98	02/09/00
36	Temperature probe	446/ACDC/048	ITS-90 TEW	PTY-124	12638	02/10/98	02/09/00
37	Temperature probe	446/ACDC/049	ITS-90 TEW	PTY-124	12640	02/10/98	02/09/00
38	Precision Power Amplifier	446/ACDC/054	Fluke	5205A	6750002		
39	Calibrator	446/ACDC/056	Fluke	5700A	5395003	01/23/98	01/22/99
40		446/ACDC/057	Fluke	5700A	5700302	01/23/98	01/22/99
41	Multimeter	446/ACDC/063	HP	87	69130305		
42	Universal Counter	446/ACDC/066	Iwatsu	SC-7204	61371006		

AC Current Measurement Facility

NO	NAME OF EQUIPMENT	CONTROL NO.	MAKER	MODEL	SERIAL NO.	DATE CAL.	DATE DUE
1	Current Shunt Adapter	446/ACDC/501	Fluke	792A-7004	5670001		
2	Current Shunt Adapter	446/ACDC/502			6795003		

NO	NAME OF EQUIPMENT	CONTROL NO.	MAKER	MODEL	SERIAL NO.	DATE CAL.	DATE DUE
3	Current Shunt-20A	446/ACDC/503	Fluke	A40	6080005		
4	Current Shunt-1A	446/ACDC/504	Fluke	A40	5965004		
5	Current Shunt-5A	446/ACDC/505	Fluke	A40	6015005		
6	Current Transfer Switch	446/ACDC/517	Holt	HCS-1	943500001009		
7	Current Shunt 10mA-250mA	446/ACDC/506	Holt	HCS-1	943500000464		
8	Current Shunt 10mA	446/ACDC/507	Holt	HCS-1	943500000465		
9	Primary AC Shunt-100A	446/ACDC/509	Holt	HCS-1H	943500001002		
10	Primary AC Shunt-Compensation Unit	446/ACDC/510	Holt	HCS-1H	943500001002		
11	Primary AC Shunt-1A	446/ACDC/511	Holt	HCS-1C	943500001003		
12	Primary AC Shunt-2.5A	446/ACDC/512	Holt	HCS-1D	943500001004		
13	Primary AC Shunt-5A	446/ACDC/513	Holt	HCS-1E	943500001005		
14	Primary AC Shunt-20A	446/ACDC/514	Holt	HCS-1G	943500001007		
15	Primary AC Shunt-Special TC	446/ACDC/515	Holt	84506	943500001006		
16	Precision Current Tranformer 10-500A	446/ACDC/516	Holt	97626	943500001008		
17	100 Ampere Transconductance Amplifier	446/ACDC/521	Ballantine	1020A	224-0414		
18	AC Measurement Standard	446/ACDC/522	Fluke	5790A	5710033		
19	Sensitive Digital Multimeter	446/ACDC/523	Keithley	182	490525		

Multifunction Calibrator & Multimeter Measurement Facility

NO	NAME OF EQUIPMENT	CONTROL NO.	MAKER	MODEL	SERIAL NO.	DATE CAL.	DATE DUE
1	Multifunction Calibrator 4808	446/ACDC/701	Wavetek	4808	29201	04/24/99	04/23/00
2	Amplifier (w/4808)	446/ACDC/702	Wavetek	4600	29456	04/24/99	04/23/00
3	Wide Band Source	446/ACDC/703	Wavetek	-		04/24/99	04/23/00
4	Multifunction Transfer Std. 4950	446/ACDC/706	Wavetek	4950	28747		
5	ACDC Shunt	446/ACDC/707	Wavetek	4953	28670	08/12/98	08/11/98
6	Multimeter	446/ACDC/710	HP	3458A			

AC Voltage Measurement Facility

NO	NAME OF EQUIPMENT	CONTROL NO.	MAKER	MODEL	SERIAL NO.	DATE CAL.	DATE DUE
1	AC/DC Transfer Standard	446/ACDC/301	Fluke	792A	5670001		
2	1000V Range Resistor	446/ACDC/303	Fluke	792A-7002	5670001		
3	Digital AC/DC Transfer	446/ACDC/305	Guildline	7130A	59523		
4	AC Measurement Standard	446/ACDC/306	Fluke	5790A	7295031		
5	Multifunction Calibrator	446/ACDC/307	Fluke	5700A	6555303	06/19/99	06/18/00
6	Amplifier	446/ACDC/308		5725A	6515002	06/19/99	06/18/00
7	Multifunction Calibrator	446/ACDC/309	Fluke	5700A	6355305		
8	Amplifier	446/ACDC/310		5725A	6330004		
9	Multimeter	446/ACDC/311	HP	3458A	2823A12545		
10	Precision Inductive Voltage Divider	446/ACDC/312	KRISS-SIRIM	-	EL-09		
11	Low Voltage TVC	446/ACDC/313	Holt	12	943500001000		
12	Attenuator	446/ACDC/314	Narda	777C-10	38095		
13	"	446/ACDC/315	"	"	38096		
14	"	446/ACDC/316	"	"	38097		
15	"	446/ACDC/317	"	777C-20	36047		
16	"	446/ACDC/318	"	"	36048		
17	"	446/ACDC/319	"	"	36049		
18	Test set for transformer	446/VTCT/72210	Keihin Densoki	ATS-51	72210	01/28/98	01/28/03
19	Current meter	446/VTCT/70307	Keihin Densoki	CLB-2	70307	01/28/98	01/28/03
20	Voltmeter	446/VTCT/4067	Yokogawa	2013	77AE4067	01/27/98	01/27/00

NO	NAME OF EQUIPMENT	CONTROL NO.	MAKER	MODEL	SERIAL NO.	DATE CAL.	DATE DUE
21	Digital multimeter	446/VTCT/2151	Yokogawa	7544 02F	97AG2151ZB	01/27/98	01/27/00
22	Clamp-On digital multimeter	446/VTCT/70690	Keihin Densoki	CDM-230B	70690	01/28/98	
23	Test set for transformer	446/VTCT/72777	Keihin Densoki	TS-65s	72777	01/29/98	01/29/00
24	Potential Transformer	446/VTCT/68	Tokyo Seiden	PTS1-SP	SH68	01/29/98	01/29/03
25	Potential Transformer	446/VTCT/69	Tokyo Seiden	PTS1-SP	SH69	01/29/98	01/29/03
26	Potential Transformer	446/VTCT/70	Tokyo Seiden	PTS1-SP	SH70	01/29/98	01/29/03
27	Potential Transformer	446/VTCT/71	Tokyo Seiden	PTS1-SP	SH71	09/03/98	09/03/03
28	Potential Transformer	446/VTCT/72	Tokyo Seiden	PTS1-SP	SH72	09/03/98	09/03/03
29	Potential Transformer	446/VTCT/73	Tokyo Seiden	PTS1-SP	SH73	09/03/98	09/03/03

DC Voltage Measurement Facility

NO	NAME OF EQUIPMENT	CONTROL NO.	MAKER	MODEL	SERIAL NO.	DATE CAL.	DATE DUE
1	Josephson Voltage Standard System	446/DCV/1000	(SIRIM /NMC)				
2	QH Resistance Standard System	446/DCV/2000	Cryogenics	2000	01332		
3	Standard Cells	446/DCV/001	YEW	2748	00027		
4	Voltage Standard	446/DCV/002	Statronics	VS 4	311		
5	Multimeter	446/DCV/003	HP	3458A	2823A12558		
6	Standard Cell Scanner	446/DCV/004	Dataproof	160A	408		
7	High Impedance Voltmeter	446/DCV/005	Fluke	845AB	6220008		
8	Reference Divider	446/DCV/006	Fluke	752A	5795202		
9	DC Ref. Voltage Std.	446/DCV/007	Fluke	732B	5610020		
10	Standard Volt Ratio Box	446/DCV/008	Guideline	9700PL	61418		
11	Kelvin-Varley Divider	446/DCV/009	Fluke	720A	665003		

RF and Microwave Laboratory

NO	NAME OF EQUIPMENT	CONTROL NO.	MAKER	MODEL	SERIAL NO.	DATE CAL.	DATE DUE
1	Power Sensor	446/MWV/020	HP	8478B	3318A24990	07/30/98	
2	Power Sensor	446/MWV/021	HP	8478B	3318A24992	08/01/98	
3	Power Sensor	446/MWV/022	HP	8478B	3318A24993	09/18/98	
4	Power Sensor	446/MWV/023	HP	8478B	3318A24994	08/01/98	
5	Power Sensor	446/MWV/024	HP	478A	3514A00724	08/06/98	
6	Power Sensor	446/MWV/025	HP	478A	3514A00726	08/06/98	
7	Power Sensor	446/MWV/026	HP	478A	3514A00727	08/06/98	
8	Power Sensor	446/MWV/004	HP	8481A	3318A99024	04/04/98	
9	Power Sensor	446/MWV/027	HP	3457A	3114A17598	02/12/98	
10	Power Sensor	446/MWV/066	HP	8498A	1801A07005	07/15/98	

VT/CT Laboratory

NO	NAME OF EQUIPMENT	CONTROL NO.	MAKER	MODEL	SERIAL NO.	DATE CAL.	DATE DUE
1	Standard voltage transformer	446/VTCT/775	Tokyo Minato Works	MT-110	775	01/14/98	01/14/03
2	Standard voltage transformer	446/VTCT/776	Tokyo Minato Works	MT-110	776	01/16/98	01/16/03
3	Auxiliary VT	446/VTCT/72771	Keihin Densoki	PTS-34	72771	01/23/98	01/26/03
4	Burden box for VT	446/VTCT/72772	Keihin Densoki	BB-P123	72772	01/23/98	01/23/03
5	Burden box for VT	446/VTCT/72773	Keihin Densoki	BB-P93	72773	02/16/98	02/06/03
6	Standard CT	446/VTCT/83911	Tokyo Minato Works	MHC-20	83911	01/16/98	01/16/03
7	Standard CT	446/VTCT/83910	Tokyo Minato Works	MHC-20	83910	01/16/98	01/16/03
8	Auxiliary CT	446/VTCT/72774	Keihin Densoki	CTS-211	72774	01/28/98	01/28/03
9	Burden box for CT	446/VTCT/72775	Keihin Densoki	BX-C11	72775	01/26/98	01/26/03
10	Burden box for CT	446/VTCT/72276	Keihin Densoki	BX-C15	72776	01/22/98	01/22/03

NO	NAME OF EQUIPMENT	CONTROL NO.	MAKER	MODEL	SERIAL NO.	DATE CAL.	DATE DUE
11	Test set for transformer	446/VTCT/72210	Keihin Densoki	ATS-51	72210	01/29/98	01/29/03
12	Current meter	446/VTCT/70307	Keihin Densoki	CLB-2	70307	01/28/98	02/28/00
13	Voltmeter	446/VTCT/4067	Yokogawa	2013	77AE4067	01/21/98	01/21/00
14	Digital multimeter	446/VTCT/2151	Yokogawa	7544 02F	97AG2151ZB	01/27/98	01/27/00
15	Clamp-On digital multimeter	446/VTCT/70690	Keihin Densoki	CDM-230B	70690	01/28/98	01/28/00
16	Test set for transformer	446/VTCT/72777	Keihin Densoki	TS-65s	72777	01/29/98	01/29/03
17	Potential Transformer	446/VTCT/68	Tokyo Seiden	PTS1-SP	SH68	01/29/98	03/09/00
18	Potential Transformer	446/VTCT/69	Tokyo Seiden	PTS1-SP	SH69	01/29/98	03/09/00
19	Potential Transformer	446/VTCT/70	Tokyo Seiden	PTS1-SP	SH70	01/29/98	03/09/00
20	Potential Transformer	446/VTCT/71	Tokyo Seiden	PTS1-SP	SH71	03/09/98	03/09/00
21	Potential Transformer	446/VTCT/72	Tokyo Seiden	PTS1-SP	SH72	03/09/98	03/09/00
22	Potential Transformer	446/VTCT/73	Tokyo Seiden	PTS1-SP	SH73	03/09/98	03/09/00

RF and Microwave Laboratory

NO	NAME OF EQUIPMENT	CONTROL NO.	MAKER	MODEL	SERIAL NO.	DATE CAL.	DATE DUE
1	Spectrum Analyzer	446/MWV/001	Tektronix	2794	B010335		
2	Frequency Counter	446/MWV/002	HP	53132A	3546A01624		
3	Power Meter	446/MWV/003	HP	437B	3125U08732		
4	Power Sensor	446/MWV/004	HP	8481A	3318A99024		
5	Synthesized Signal Generator	446/MWV/005	HP	83732B	US37100861		
6	Signal Genarator	446/MWV/006	HP	8657B	3520U06646		
7	Coaxial Step Attenuator 12dB	446/MWV/007	HP	355C	2524A44374		
8	Coaxial Step Attenuator 120dB	446/MWV/008	HP	355D	2522A46276		
9	Attenuator and Signal Calibrator	446/MWV/009	Weinschell	VM-7	266		
10	Vector Network Analyzer	446/MWV/010	HP	8753D	3410J020046		

Power Standard System

NO	NAME OF EQUIPMENT	CONTROL NO.	MAKER	MODEL	SERIAL NO.	DATE CAL.	DATE DUE
1	Power Sensor	446/MWV/020	HP	8478B	3318A24990	07/30/98	
2	Power Sensor	446/MWV/021	HP	8478B	3318A24992	08/01/98	
3	Power Sensor	446/MWV/022	HP	8478B	3318A24993	09/18/98	
4	Power Sensor	446/MWV/023	HP	8478B	3318A24994	08/01/98	
5	Power Sensor	446/MWV/024	HP	478A	3514A00724	08/06/98	
6	Power Sensor	446/MWV/025	HP	478A	3514A00726	08/06/98	
7	Power Sensor	446/MWV/026	HP	478A	3514A00727	08/06/98	
8	Power Sensor	446/MWV/004	HP	8481A	3318A99024	04/04/98	
9	Digital Multimeter	446/MWV/027	HP	3457A	3114A17598	02/12/98	
10	High-Power Attenuator	446/MWV/066	HP	8498A	1801A07005	07/15/98	

Reflection Coefficient Standard System

NO	NAME OF EQUIPMENT	CONTROL NO.	MAKER	MODEL	SERIAL NO.	DATE CAL.	DATE DUE
1	TRL Calibration Kit 7mm	446/MWV/028	HP	85050C	3110A00610	12/17/98	
2	OSL Calibration Kit 7mm	446/MWV/029	HP	85050B	3106A00596	09/04/98	
3	Verification Kit 7mm	446/MWV/030	HP	85029B	3249A00642	06/06/98	
4	Calibration Kit 7mm	446/MWV/031	HP	85031B	2919A01968	08/07/98	
5	Calibration Kit Type-N	446/MWV/032	HP	85032B	3217A09967	04/17/98	

Attenuation Standard System

NO	NAME OF EQUIPMENT	CONTROL NO.	MAKER	MODEL	SERIAL NO.	DATE CAL.	DATE DUE
1	Step Attenuator 0-11 dB	446/MWV/033	HP	84904L	2936A00468	11/21/97	11/20/99
2	Step Attenuator 0-90 dB	446/MWV/034	HP	84906L	2936A00347	11/21/97	11/20/99

NO	NAME OF EQUIPMENT	CONTROL NO.	MAKER	MODEL	SERIAL NO.	DATE CAL.	DATE DUE
3	Attenuator Set 3,6,10,20 dB	446/MWV/035	HP	11582A	-	07/16/98	07/16/00
4	Attenuator Set 3,6,10,20 dB	446/MWV/036	HP	11582A	-	07/16/98	07/16/00
5	Attenuator Set 3,6,10,20 dB	446/MWV/037	HP	11583A	-	07/16/98	07/16/00
6	Attenuator Set 3,6,10,20 dB	446/MWV/038	HP	11583A	-	07/16/98	07/16/00
7	Attenuator Set 3,6,10,20 dB	446/MWV/039	HP	11583C	-	07/13/98	07/16/00
8	Attenuator Set 3,6,10,20 dB	446/MWV/040	HP	11583C	-	07/13/98	07/16/00
9	Fixed Attenuator 3 dB (7mm)	446/MWV/041	HP	8492A	09770	04/06/98	03/30/00
10	Fixed Attenuator 6 dB (7mm)	446/MWV/042	HP	8492A	06714	04/06/98	03/30/00
11	Fixed Attenuator 6 dB (7mm)	446/MWV/043	HP	8492A	06796	12/21/97	12/21/99
12	Fixed Attenuator 6 dB (7mm)	446/MWV/044	HP	8492A	06718	04/06/98	03/30/00
13	Fixed Attenuator 6 dB (7mm)	446/MWV/045	HP	8492A	06736	03/30/98	03/30/00
14	Fixed Attenuator 6 dB (7mm)	446/MWV/046	HP	8492A	06737	04/30/98	03/30/00
15	Fixed Attenuator 6 dB (7mm)	446/MWV/047	HP	8492A	06738	04/06/98	03/30/00
16	Fixed Attenuator 6 dB (7mm)	446/MWV/048	HP	8492A	06739	04/06/98	03/30/00
17	Fixed Attenuator 6 dB (7mm)	446/MWV/049	HP	8492A	06741	04/22/98	03/30/00
18	Fixed Attenuator 10 dB (7mm)	446/MWV/050	HP	8492A	20496	04/24/98	03/30/00
19	Fixed Attenuator 10 dB (7mm)	446/MWV/051	HP	8492A	20498	04/24/98	03/30/00
20	Fixed Attenuator 20 dB (7mm)	446/MWV/052	HP	8492A	15471	04/07/98	03/30/00
21	Fixed Attenuator 20 dB (7mm)	446/MWV/053	HP	8492A	15469	04/24/98	03/30/00
22	Fixed Attenuator 3 dB (N)	446/MWV/054	HP	8491B	22307	05/28/98	03/30/00
23	Fixed Attenuator 6 dB (N)	446/MWV/055	HP	8491B	23911	07/23/98	03/30/00
24	Fixed Attenuator 10 dB (N)	446/MWV/056	HP	8491B	38972	03/25/98	03/30/00
25	Fixed Attenuator 10 dB (N)	446/MWV/057	HP	8491B	38980	03/25/98	03/30/00
26	Fixed Attenuator 20 dB (N)	446/MWV/058	HP	8491B	30891	04/24/98	03/30/00
27	Fixed Attenuator 20 dB (N)	446/MWV/059	HP	8491B	30884	04/24/98	03/30/00
28	Fixed Attenuator 3 dB (3.5mm)	446/MWV/060	HP	8493C	06797	03/02/98	03/30/00
29	Fixed Attenuator 6 dB (3.5mm)	446/MWV/061	HP	8493C	17438	03/02/98	03/30/00
30	Fixed Attenuator 10 dB (3.5mm)	446/MWV/062	HP	8493C	12699	03/23/98	03/30/00
31	Fixed Attenuator 10 dB (3.5mm)	446/MWV/063	HP	8493C	13021	03/24/98	03/30/00
32	Fixed Attenuator 20 dB (3.5mm)	446/MWV/064	HP	8493C	14056	03/24/98	03/30/00
33	Fixed Attenuator 20 dB (3.5mm)	446/MWV/065	HP	8493C	14045	03/24/98	03/30/00

Power/Energy Laboratory

NO	NAME OF EQUIPMENT	CONTROL NO.	MAKER	MODEL	SERIAL NO.	DATE CAL.	DATE DUE
1	Standard Watt Converter	466/PWR/3	Yokogawa	2885	3	06/17/99	06/17/01
2	Standard Watt Converter	466/PWR/4	Yokogawa	2885	4	06/17/99	06/17/01
3	Standard Watt Converter	466/PWR/5	Yokogawa	2885	5	05/31/99	06/17/01
4	Standard Watthour Meter	466/PWR/90103	Osaki Denki	OE4AH-1	90103	01/19/98	01/19/00
5	Standard Watthour Meter	466/PWR/90104	Osaki Denki	OE4AH-1	90104	01/19/98	01/19/00
6	Standard Watthour Meter	466/PWR/90105	Osaki Denki	OE4AH-1	90105	01/19/98	01/19/00
7	Multimeter	466/PWR/17659	HP	3458A	2823A17659	04/30/99	04/30/00
8	Multimeter	466/PWR/17661	HP	3458A	2823A17661	04/30/99	04/30/00
9	Multimeter	466/PWR/17681	HP	3458A	2823A17681	04/30/99	04/30/00
10	Multimeter	466/PWR/62753	Keihin Densoki	PWS307C	62753	05/05/99	05/05/00
11	Power & Energy Calibrator	466/PWR/740	Rotek	811AEPA	740	09/15/99	05/15/00
12	Power & Energy Calibrator	466/PWR/741	Rotek	811AEPA	741	09/15/99	05/15/00
13	Power & Energy Calibrator	466/PWR/742	Rotek	811AEPA	742	04/10/99	04/10/00
14	Digital Power Meter	466/PWR/	Yokogawa	2531			

DC Resistance — Standard Resistor

NO	NAME OF EQUIPMENT	CONTROL NO.	MAKER	MODEL	SERIAL NO.	DATE CAL.	DATE DUE
1	1 mΩ	446/DCOHM/101	YEW	2792	00075U		
2	2 mΩ	102	YEW	2792	66VW1029		
3	3 mΩ	103	L & N	4223B	1915296		
4	10 mΩ	104	YEW	2792	00110U		
5	11 mΩ	105	YEW	2792	66VW2064		
6	12 mΩ	106	L & N	4222B	1924642		
7	13 mΩ	107	YEW	2792	00556		
8	100 mΩ	108	L & N	4221B	1921982		
9	101 mΩ	109	YEW	2794	00025U		
10	102 mΩ	110	YEW	2792	66VW3036		
11	1 Ω	111	YEW	2792	66VW4058		
12	1 Ω	112	YEW	2794	00030		
13	1 Ω	113	YEW	2794	00031		
14	1 Ω	114	YEW	2794	00032		
15	1 Ω	115	L & N	4210	1924791		
16	1 Ω	116	L & N	4210	1910469		
17	1 Ω	117	L & N	4210	1910466		
18	1 Ω	118	L & N	4210	1910465		
19	1 Ω	119	L & N	4210	1915249		
20	1 Ω	120	L & N	4210B	1915372		
21	1 Ω	121	Guildline	9330	44092		
22	1 Ω	122	Tinsley	5685A	263374		
23	1 Ω	123	Fluke	742A	6380028		
24	10 Ω	124	YEW	2794	00036		
25	10 Ω	125	YEW	2794	00034		
26	10 Ω	126	L & N	4025B	1924791		
27	10 Ω	127	L & N	4025B	1924790		
28	10 Ω	128	Tinsley	5685A	262596		
29	10 Ω	129	Guildline	9330	44547		
30	100 Ω	130	L & N	4030B	1924632		
31	100 Ω	131	L & N	4030B	1924633		
32	100 Ω	132	YEW	2794	00040		
33	100 Ω	133	YEW	2794	00041		
34	100 Ω	134	YEW	2792	00603		
35	100 Ω	135	Guildline	9330	44157		
36	100 Ω	136	AEC	ASR-101	96A0268		
37	100 Ω	137	AEC	ASR-101	96A0269		
38	100 Ω /s	138	ESI	SR1010	030007		
39	100 Ω	139	Tinsley	5685A	267734		
40	1 kΩ	140	L & N	4035B	1924735		
41	1 kΩ	141	L & N	4035B	1924736		
42	1 kΩ	142	Guildline	9330	43775		
43	10 kΩ	143	L & N	4040B	1924628		
44	10 kΩ	144	L & N	4040B	1924629		
45	10 kΩ	145	YEW	2792	00358		
46	10 kΩ	146	ESI	SR104	K202059430104		

NO	NAME OF EQUIPMENT	CONTROL NO.	MAKER	MODEL	SERIAL NO.	DATE CAL.	DATE DUE
47	10 kΩ	147	ESI	SR104	K203059430104		
48	10 kΩ	148	ESI	SR104	J202089130104		
49	10 kΩ	149	AEC	ASR-103	95M0241		
50	10 kΩ	150	AEC	ASR-103	95M0260		
51	10 kΩ	151	Fluke	742A	6450006		
52	10 kΩ /s	152	ESI	SR1010	05008		
53	10 kΩ /s	153	ESI	SR1010	046000		
54	100 kΩ	154	ESI	SR1010	052000		
55	100 kΩ	155	L & N	4045B	1924624		
56	100 kΩ	156	L & N	4045B	1924627		
57	100 kΩ	157	Guildline	9330	44039		
58	1 MΩ	158	L & N	4050B	1926360		
59	1 MΩ	159	L & N	4050B	1926362		
60	1 MΩ	160	Guildline	9330	43677		
61	1 MΩ	161	Guildline	9330	59914		
62	1 MΩ	162	Guildline	9330	59915		

Standard Resistor (High Resistance Group)

NO	NAME OF EQUIPMENT	CONTROL NO.	MAKER	MODEL	SERIAL NO.	DATE CAL.	DATE DUE
1	10 MΩ	446/DCOHM/163	Guildline	9330	45723		
2	10 MΩ	164	Guildline	9330	59545		
3	10 MΩ	165	Guildline	9330	59546		
4	100 MΩ	166	Guildline	9330	61486		
5	100 MΩ	167	Guildline	9330	61487		
6	10 MΩ	168	E & C	HVR-1000	966388		
7	100 MΩ	169	E & C	HVR-1000	966389		
8	100 MΩ	170	TR	TR45	40960018		
9	100 MΩ	171	TR	TR45	50960014		
10	100 MΩ	172	TR	TR45	50960015		
11	1 GΩ	173	TR	TR45	50810002		
12	1 GΩ	174	TR	TR45	50810014		
13	1 GΩ	175	TR	TR45	50810015		
14	1 GΩ	176	E & C	HVR-1000	966390		
15	10 GΩ	177	E & C	HVR-1000	966391		
16	10 GΩ	178	TR	TR45	40970020		
17	10 GΩ	179	TR	TR45	50970016		
18	10 GΩ	180	TR	TR45	50970017		
19	100 GΩ	181	E & C	HVR-1000	966392		
20	100 GΩ	182	TR	TR45	40820012		
21	100 GΩ	183	TR	TR45	50820011		
22	100 GΩ	184	TR	TR45	50820012		
23	1 TΩ	185	TR	TR45	40980028		
24	1 TΩ	186	TR	TR45	50980018		
25	1 TΩ	187	TR	TR45	50980019		

ANNEX 10 1/2

List of Calibration Service Items of NMC

Parameter		Calibration Item	At Present		1995	
			Range	Best Measurment Uncertainty	Range	Best Measurment Uncertainty
Length	End Std.	Gauge Block, Caliper, Heightgauge, Steel Ball, Optical Flat, Optical Parallel, Surface Plate, Taper Plug Gauge	0-300 mm 0-500 mm 500-1000 mm	± 0.02 μ m ± 0.06 μ m ± 0.3 μ m	0.1 μ m ~ 10 m	± 2 μ m
	Line Std.	Line Scale, Meauring Tape	0-800 mm 0-200 mm 0-1 m (Interferometer) 0-1 m (Comparison)	± 0.8 μ m ± 0.6 μ m ± 2 μ m ± 8 μ m	1 m	± 8 μ m
	Ring gauge (Inside Diameter)	Ring Gauge	0-100 mm	± 0.5 μ m	0-100 mm	0.8 μ m
	Pin gauge (Outside Diameter)	Pin Gauge, Thread Pin Gauge	0-30 mm	± 0.5 μ m	*1	*1
	Angle gauge	Angle Gauge, Poligon Mirror	0-45°	± 5 sec		
Pressure	Pneumatic		up to 40 MPa	± 25 ppm		
	Hydraulic		up to 500 MPa	± 30 ppm	0 ~ 55 MPa	± 0.01 %
Electrical	DC Voltage	Zener DC Volt Standard Standard Cell DC Voltmeter DC Voltage Calibrator	100 μ V-20 kV	± 0.02 ppm	0 ~ 1.5 kV	± 1 ppm
	AC Voltage	AC Voltmeter AC Voltage Calibrator	2 mV-1000 V	± 25 ppm		
	AC Voltage (Ratio)	Voltage Transformer	3.3/6.6/11kV:110 V	± 0.02 % (Voltage ratio) ± 0.6 min (Phase angle)		

ANNEX 10 2/2 List of Calibration Service Items of NMC

Parameter		Calibration Item	At Present		1995	
			Range	Best Measurment Uncertainty	Range	Best Measurment Uncertainty
Electrical	Resistance	Standard Register Decade Resistance Box Resistance Calibrator	1 mΩ -1 TΩ	± 0.01 ppm	0 ~ 10^{12} Ω	± 1 ppm
	DC Current	DC Ammeter DC Cureent Calibrator	100 μ A-100 A	± 2 ppm	0 ~ 100 A	± 10 ppm
	AC Current	AC Ammeter AC Current Calibrator	100 μ A-100A, 40-50 k Hz	± 200 ppm		
	AC Current (Ratio)	Current Transformer	5 A-2000 A: 5 A@50 Hz	± 0.02 % (Current rario) ± 0.6 min (Phase angle)		
	Inductance	Standard Inductor	100 μ H-10H @1 kHz	± 0.05	0 ~ 1000 H	± 0.02 %
	Capacitance	Standard Capacitance	1 PF-100 μ F, 1 kHz	± 5 ppm	0 ~ 1000 μ F	± 0.002 %
	Power	Watt meter	100 V,5A & 240V,5A	± 0.02	*1	*1
	Energy (Watt hour)	Watt hour meter	power factor 0-1, Sigle and Three Phase	± 0.05		
	Microwave Power	Power Meter, Power Sensor Signal Generator	TypeN, Effective efficiency 100 MHz-18 GHz	± 0.0003	*1	*1
	Reflection	Components of 50 Ω system	0-1, APC7, TypeN, 500 M-16 GHz	± 0.007 of Γ		
	Attenuation	Attenuator	TypeN, 30MHz-10GHz, 0-70 dB	± 0.003 dB	0 ~ 10 GHz	± 10^{-11}
Vibration	Accele sensitivity Acceleration	Accelerometer	1/8-1"Dia. 20 Hz-20 kHz	± 0.005	*1	*1

*1: Calibration service was not available in 1995.

Traceability Chart of Measurement Standards in NMC

Traceability Chart of Length Standards

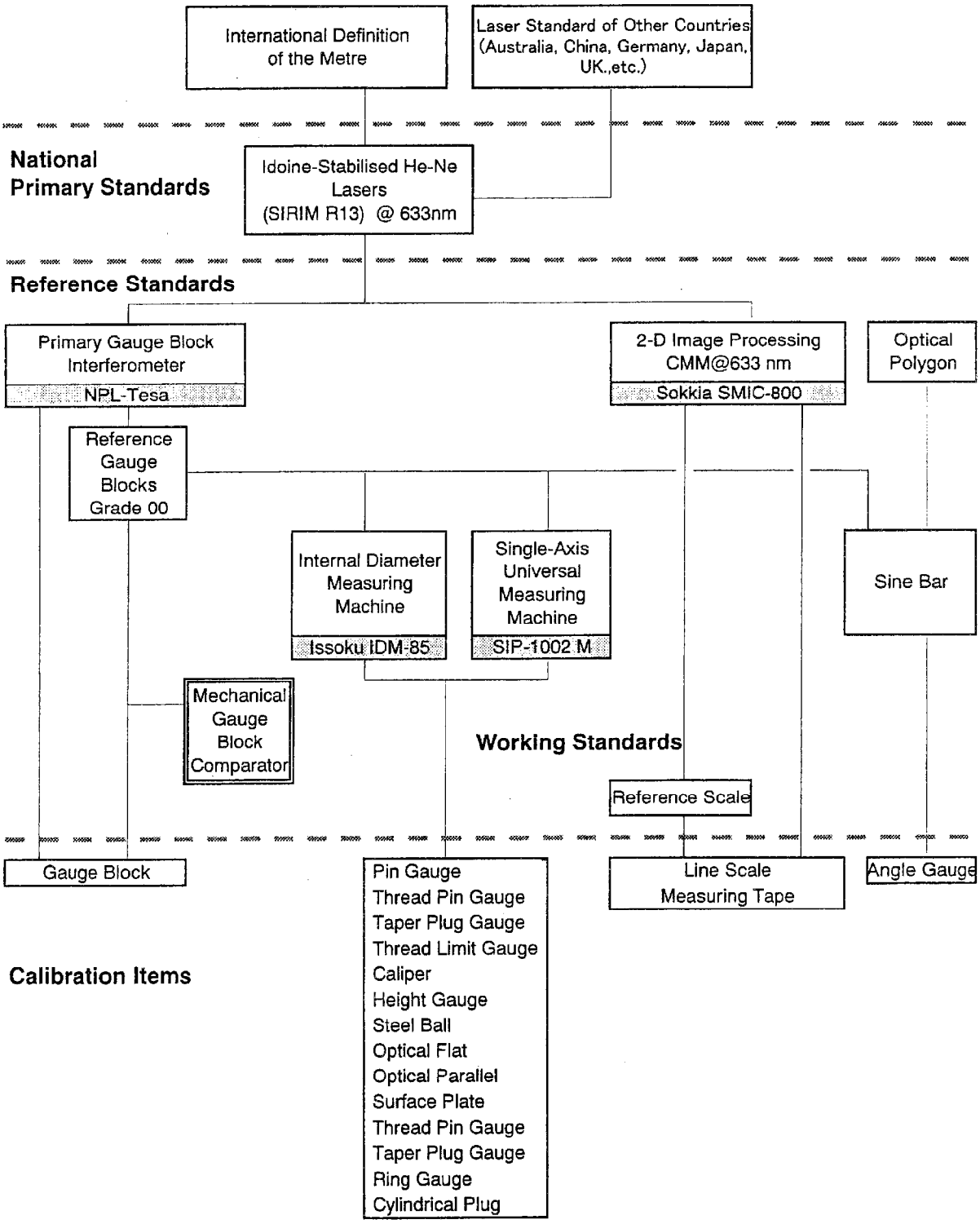

ANNEX 11 2/9

Traceability Chart of Pressure Standards

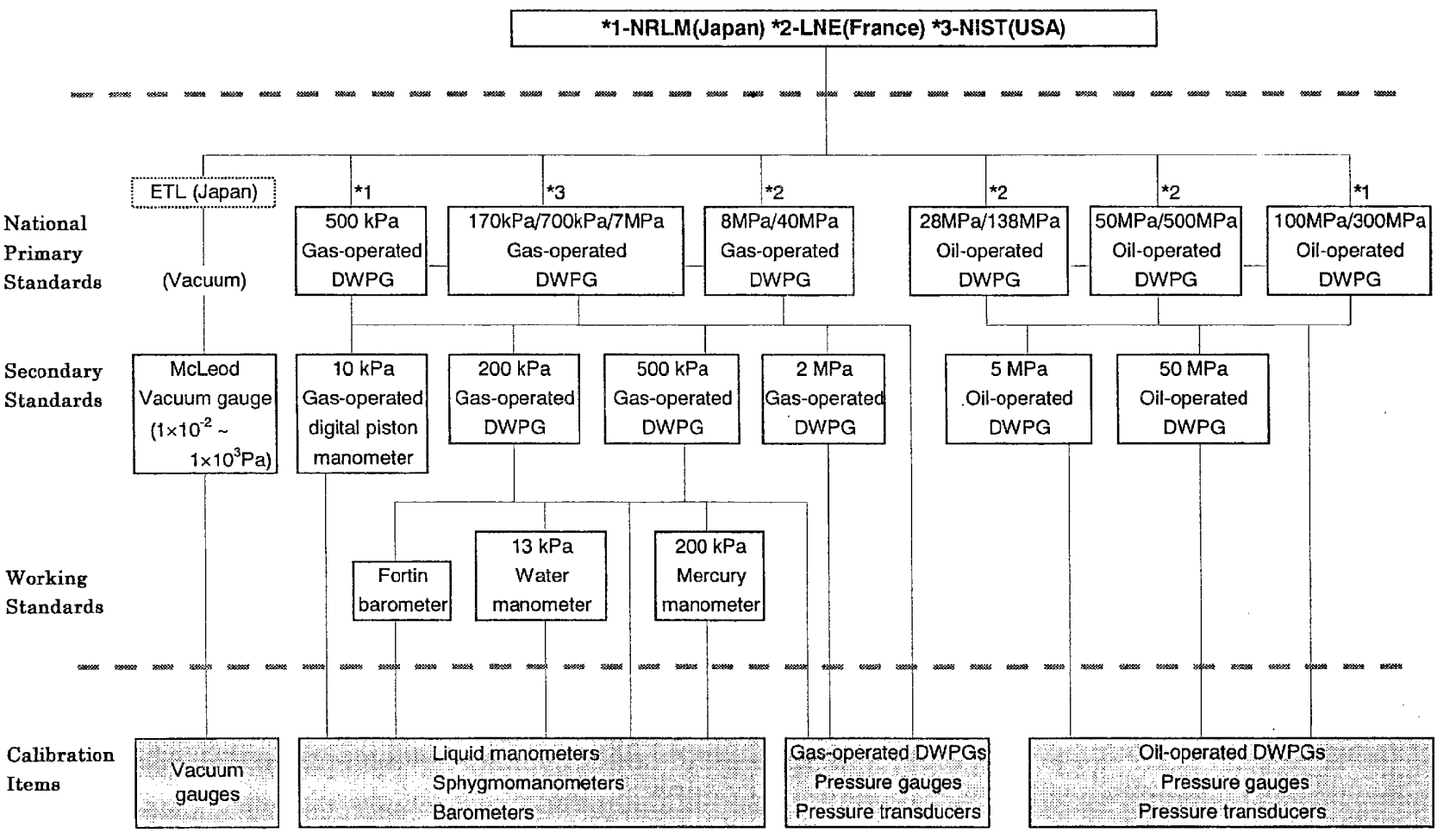

DWPG : dead-weight pressure gauge

Traceability Chart of Electrical Standards

The Relationship between Fundamental Electrical Quantities

DC, AC Voltage, Current, Resistance, Power, & Energy

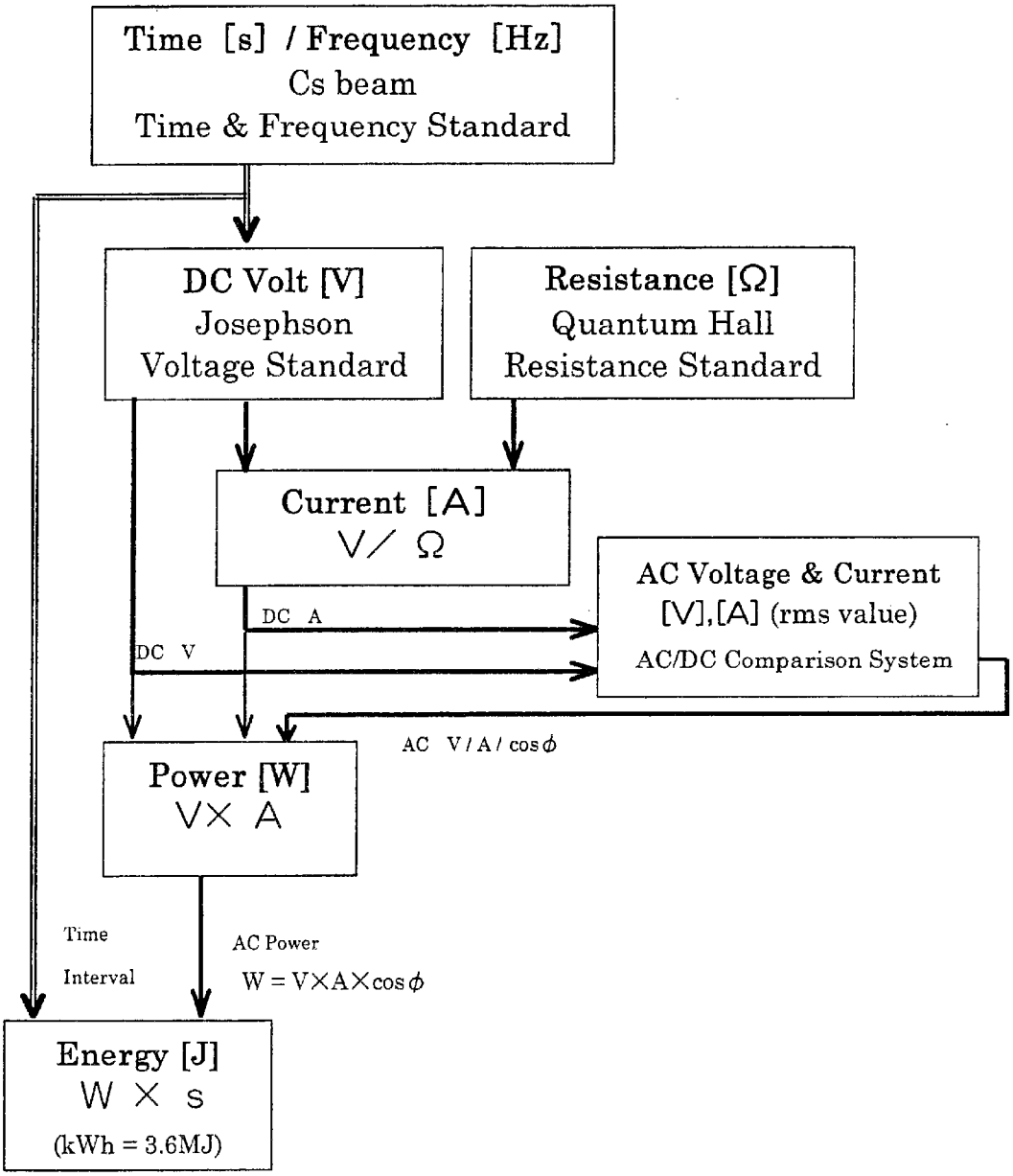

AC (Lower Frequency Range)

Voltage / Current

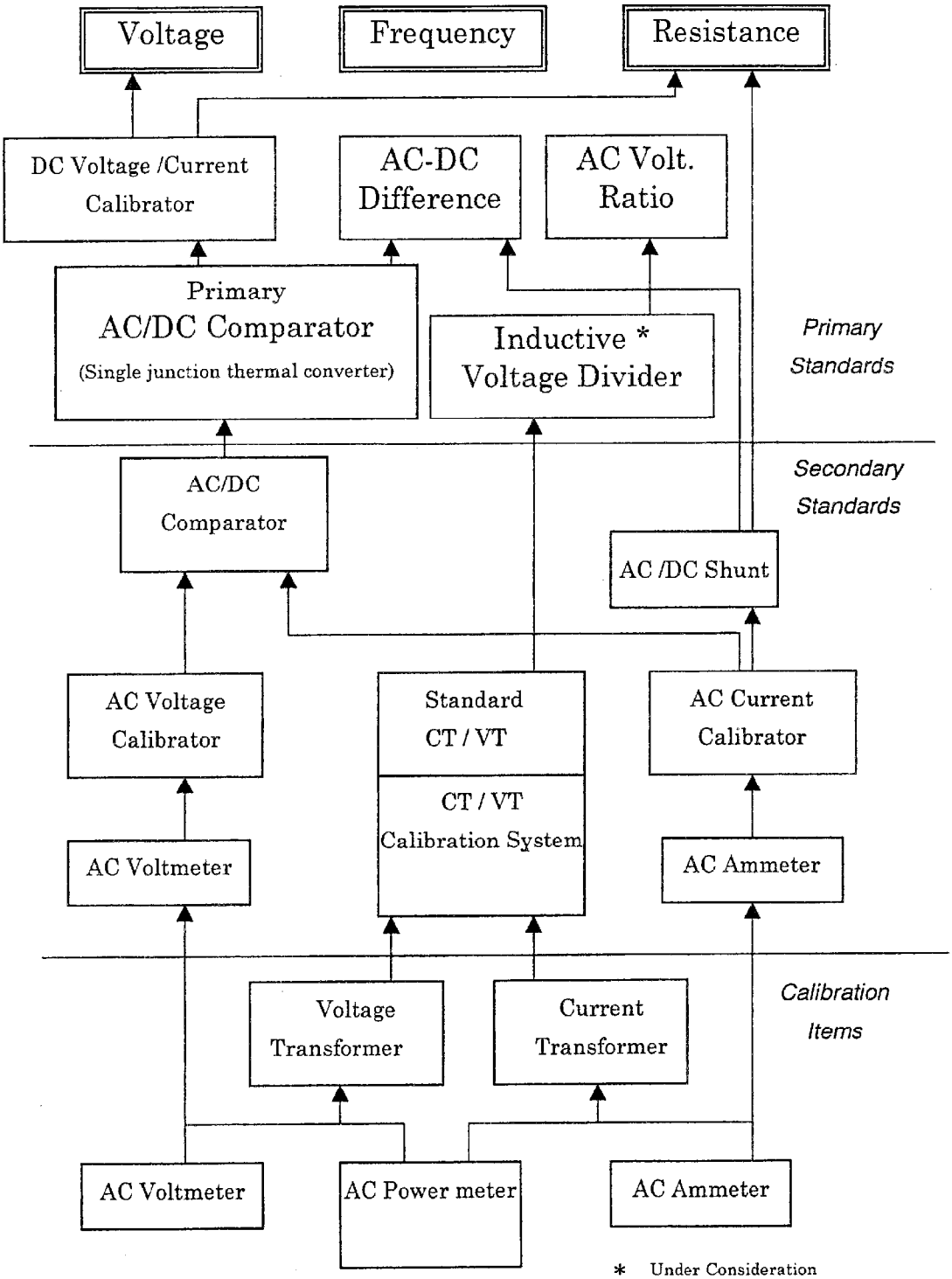

* Under Consideration

Frequency is a major parameter.

AC (Lower Frequency Range)

Power / Energy

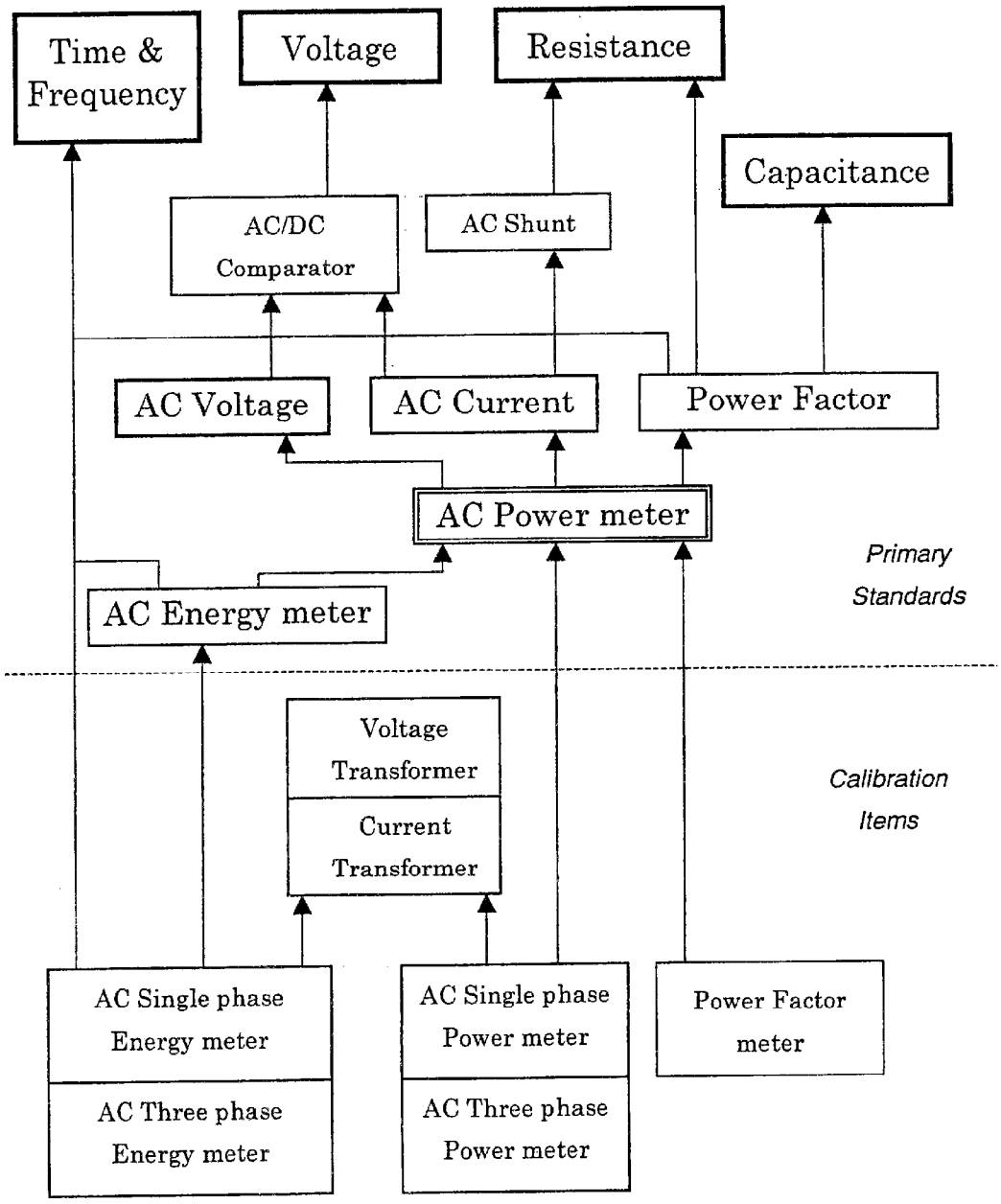

DC Voltage

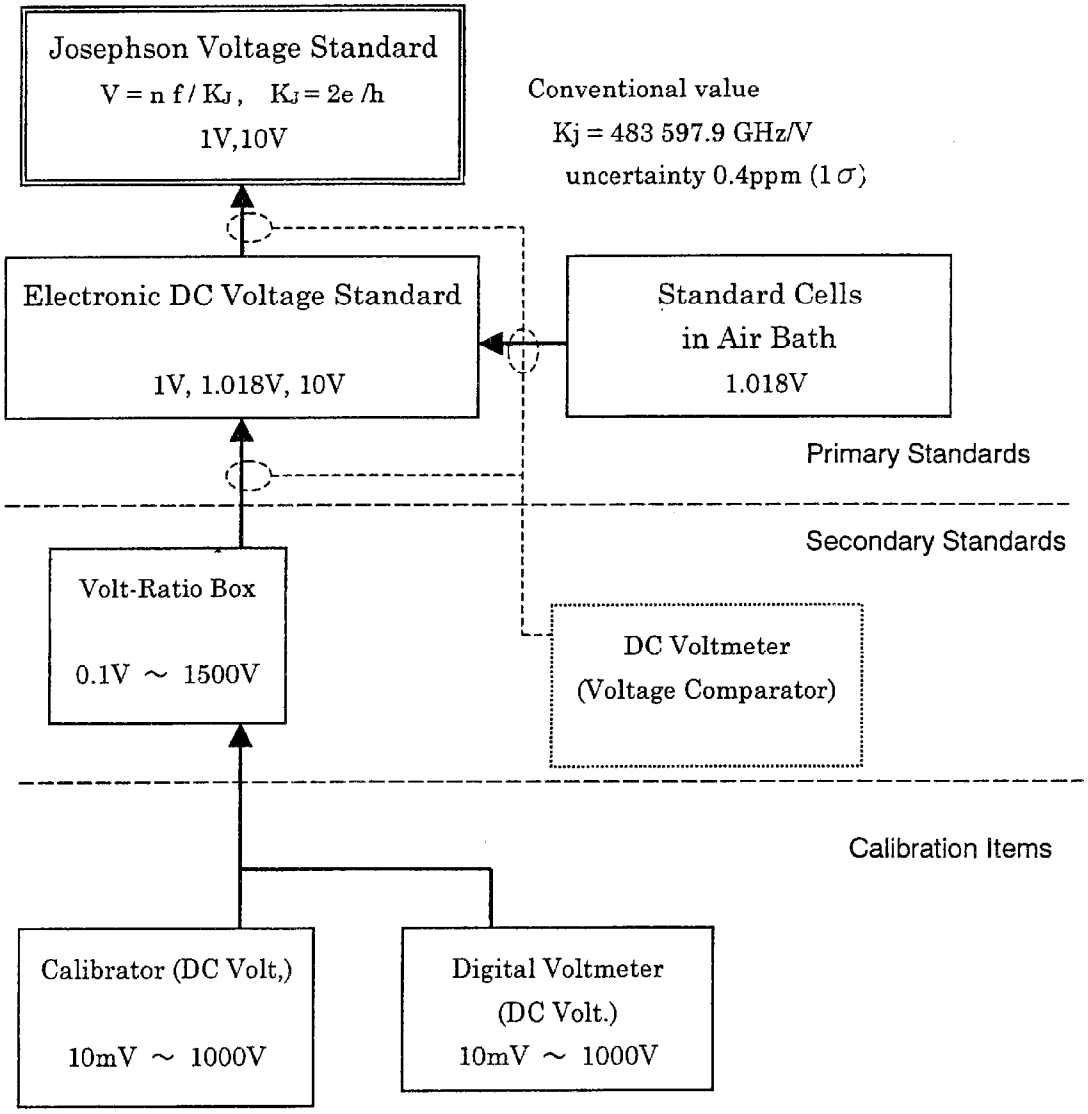
Josephson Voltage Standard
V = n f / KJ , KJ = 2e /h
1V,10V
Conventional value
Kj = 483 597.9 GHz/V
uncertainty 0.4ppm (1 σ)
Electronic DC Voltage Standard
1V, 1.018V, 10V
Standard Cells
in Air Bath
1.018V
Primary Standards
Secondary Standards
Volt-Ratio Box
0.1V ~ 1500V
DC Voltmeter
(Voltage Comparator)
Calibration Items
Calibrator (DC Volt,)
10mV ~ 1000V
Digital Voltmeter
(DC Volt.)
10mV ~ 1000V

RESISTANCE

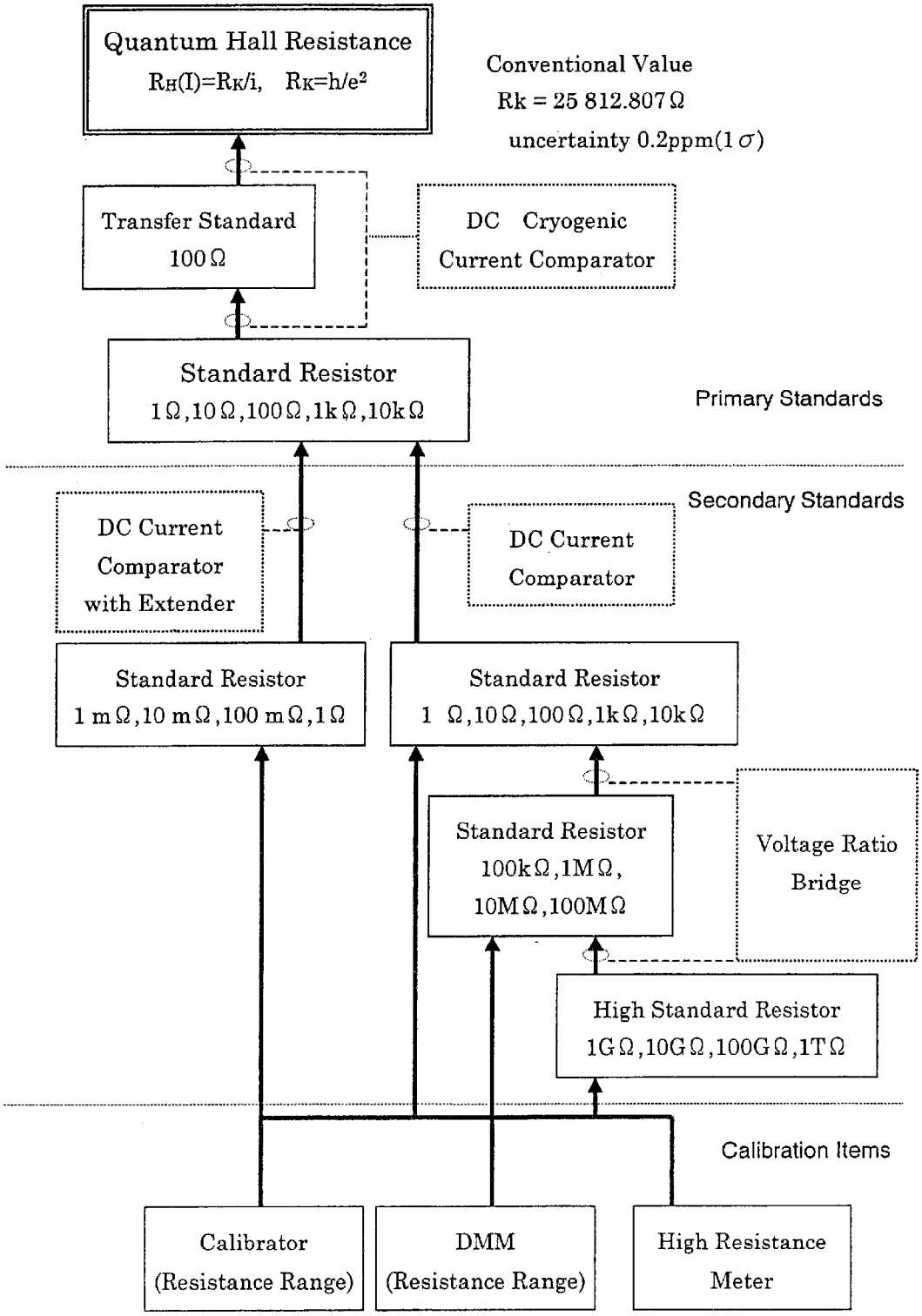
Quantum Hall Resistance
$R_H(I)=R_K/i$, $R_K=h/e^2$
Conventional Value
Rk = 25 812.807 Ω
uncertainty 0.2ppm(1 σ)
Transfer Standard
100 Ω
DC Cryogenic
Current Comparator
Standard Resistor
1 Ω, 10 Ω, 100 Ω, 1k Ω, 10k Ω
Primary Standards
Secondary Standards
DC Current
Comparator
with Extender
DC Current
Comparator
Standard Resistor
1 m Ω, 10 m Ω, 100 m Ω, 1 Ω
Standard Resistor
1 Ω, 10 Ω, 100 Ω, 1k Ω, 10k Ω
Standard Resistor
100k Ω, 1M Ω,
10M Ω, 100M Ω
Voltage Ratio
Bridge
High Standard Resistor
1G Ω, 10G Ω, 100G Ω, 1T Ω
Calibration Items
Calibrator
(Resistance Range)
DMM
(Resistance Range)
High Resistance
Meter

Micro Wave

Power, Attenuation, Reflection Coefficient

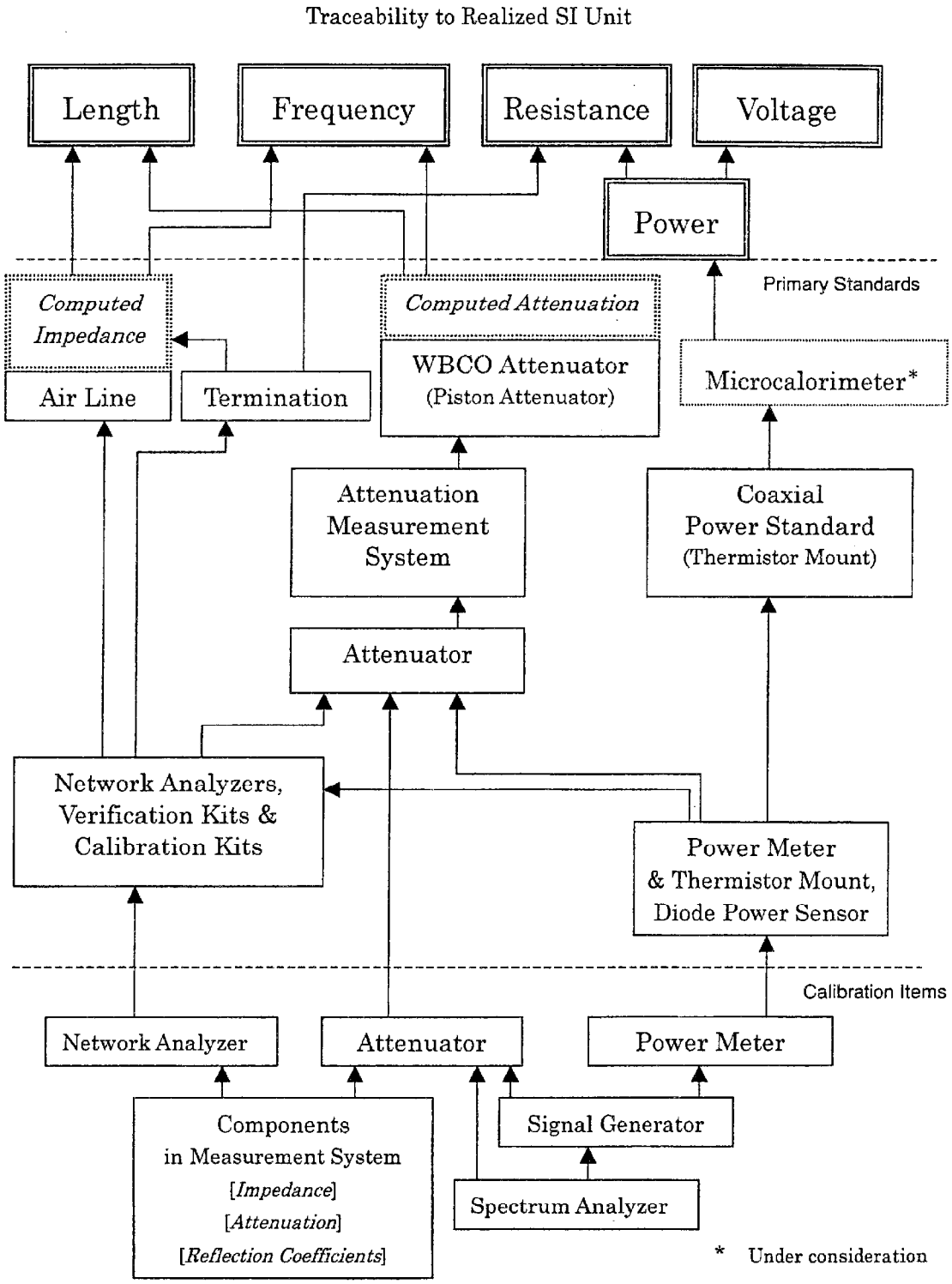

8 RF trac-chart

ANNEX 11 9/9

Traceability Chart of Vibration Standards

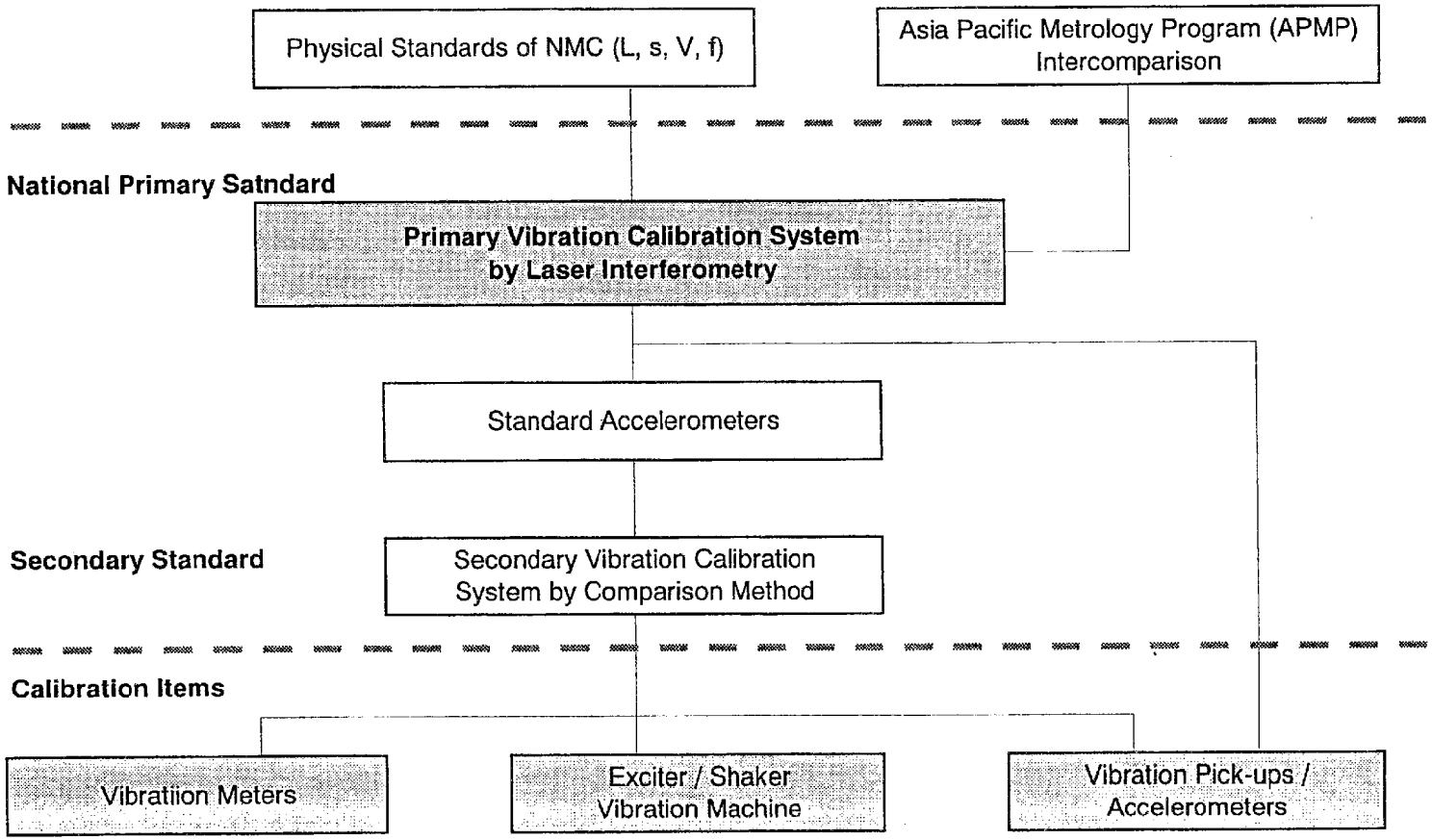

ANNEX 12-1

List of Dispatched Long-term Experts

CALENDAR YEAR			1996				1997				1998				1999				2000
JAPANESE FISCAL YEAR			1995	1996				1997				1998				1999			
			IV	I	II	III	IV	I	II	III	IV	I	II	III	IV	I	II	III	IV
Term of Technical Cooperation																			
1,-1	Chief Advisor	Dr. Ai Mitsuo			1996/6/25 - 1998/7/24														
1,-2	Chief Advisor	Dr. Sakuma Eiichi											1998/7/10 - 2000/2/29						
2,	Coordinator	Mr. Fukunaga Michikazu			1996/4/8 - 2000/2/29														
3,	Length	Mr. Sasada Yuko			1996/5/28 - 2000/2/29														
4,	Pressure	Mr. Nishibata Ken			1996/5/28 - 1998/7/27														
5,	Electricity	Mr. Kato Toshio			1996/5/28 - 2000/2/29														
6,	Vibration	Mr. Shiraishi Kenji			1996/5/28 - 1998/5/27														

ANNEX 12-2

List of Dispatched Short-term Experts

CALENDAR YEAR	1996				1997				1998				1999				2000
JAPANESE FISCAL YEAR	1995	1996				1997				1998				1999			
	IV	I	II	III	IV	I	II	III	IV	I	II	III	IV	I	II	III	IV
Term of Technical Cooperation																	
1, Vibration Measurement (Installation)				Mr. Ochiai Naofumi 1996/10/12 - 1996/11/8													
2, Electrical Measurement				Mr. Shida Masaaki(1) 1996/10/12 - 1996/12/20													
3, Length Measurement (Installation)				Mr. Suzuki Masashi				1997/9/22 - 1997/10/1									
4, Length Measurement (Installation)				Mr. Naito Shuji				1997/10/6 - 1997/10/17									
5, RF Power Measurement				Ms. Sato Keiko(1)				1997/10/20 - 1997/12/19									
6, Capacitance & Impedance				Mr. Shida Masaaki(2)						1997/12/13 - 1998/2/22							
7, High Pressure Measurement (Installation)				Mr. Tsukada Kazumasa						1997/12/15 - 1997/12/25							
8, Electrical in AC Voltage & Current						Mr. Yasuda Ryosuke				1998/1/7 - 1998/3/25							
9, Electrical in Power & Energy						Mr. Oku Masaji				1998/1/7 - 1998/3/25							
10, Vibration Measurement						Mr. Ishigami Tamio					1998/3/6 - 1998/4/4						
11, Pressure & Mass						Mr. Uchikawa Keizaburo					1998/3/15 - 1998/5/1						
12, Length Measurement (Inside Diameter)							Mr. Hara Mamoru					1998/6/23 - 1998/7/8					
13, CT/VT Measurement (Installation)							Mr. Ogawa Kazuo						1998/9/16 - 1998/10/9				
14, CT/VT Calibration & Testing							Mr. Shimizu Masakazu						1998/9/16 - 1998/11/13				
15, RF Reflection Coefficient Calibration							Mr. Shida Masaaki(3)						1998/10/10 - 1998/12/12				
16, Attenuation Calibration							Mr. Igarashi Shigeru 1999/2/1 - 1999/3/27										
17, Vibration Calibration							Mr. Shiraishi Kenji 1999/3/1 - 1999/5/31										
18, Humidity Measurement							Dr(Ms). Inamatsu Teruko 1999/3/21 - 1999/4/10										
19, Pressure Calibration								Mr. Nishibata Ken 1999/7/11 - 1999/10/10									
20, Measurement Control & Quality System								Mr. Sakurakoji Mitsuki 1999/7/19 - 1999/9/22									
21, Screw Thread & Coordinate Measuring								Mr. Yokoyama Yutaka 1999/8/5 - 1999/10/5									
22, Measurement Standards								Dr(Mr). Mitsui Kiyoto 1999/9/13 - 1999/9/18									
23, Power (W)								Mr. Oku Masaji 1999/9/19 - 1999/10/2									
24, (RF Power Traceability)								(Ms.Sato Keiko(2) 1999/11/13 - 1999/12/10)									

ANNEX 13

List of the C/P Trained in Japan

CALENDAR YEAR	1996				1997				1998				1999				2000
JAPANESE FISCAL YEAR	1995	1996				1997				1998				1999			
	IV	I	II	III	IV	I	II	III	IV	I	II	III	IV	I	II	III	IV
Term of Technical Cooperation																	
1, Industrial Standard (Observation)					Mr. Woo Seng Khee 1996/10/17 - 1996/10/30												
2, Industrial Standard (Observation)					Mr. Chen Soo Fatt 1996/10/17 - 1996/10/30												
3, RF Power (Electricity)			Mr. Fadeli Hizam					1997/5/26 - 1997/7/26									
4, Vibration Calibration & Measurement			Mr. Wan Aziz Salleh					1997/5/26 - 1997/7/26									
5, Power & Energy (W-H) Meter			Dr.(Ms.) Wan Nor Liza						1997/6/26 - 1997/10/4								
6, Length Standards & Measurement			Mr. Eng Fook Eng						1997/9/7 - 1997/11/7								
7, AC Voltage Standard					Ms. Seek Seu Gan 1998/7/8 - 1998/9/3												
8, Pressure Standards & Measurement					Mr. Wan Abd. Malik 1998/10/11 - 1998/12/18												
9, Industrial Standard (Observation)					Mr. Md. Nor Md. Chik 1998/11/30 - 1998/12/12												
10, Accuracy Enhancement on Electrical Fundamental Standards					Mr. Abdul Rashid Zainal 1999/2/23 - 1999/3/13												
11, Geometrical Quantity Measurement					Mr. Yoeh Kew Huat 1999/3/1 - 1999/4/29												
12, RF Attenuation							Dr. Mohd. Nasir Zainal Abdin 1999/6/20 - 1999/7/24										
13, Calibration of Power & Energy Meter (WH Meter)							Mr. Nazri bin Marzuki 1999/6/20 - 1999/8/20										
14, Length Mesurement							Ms. Hasnah Mohd. Joned 1999/7/4 - 1999/8/1										