THE FEASIBILITY STUDY ON INTER-URBAN HIGHWAY SYSTEM ALONG THE PAN-PHILIPPINE HIGHWAY (STA. RITA, PLARIDEL-SAN JOSE SECTION)

SCALE :	CABANATUAN BYPASS STANDARD CROSS SECTIONS	DRAWING NO.
1:200		26/68

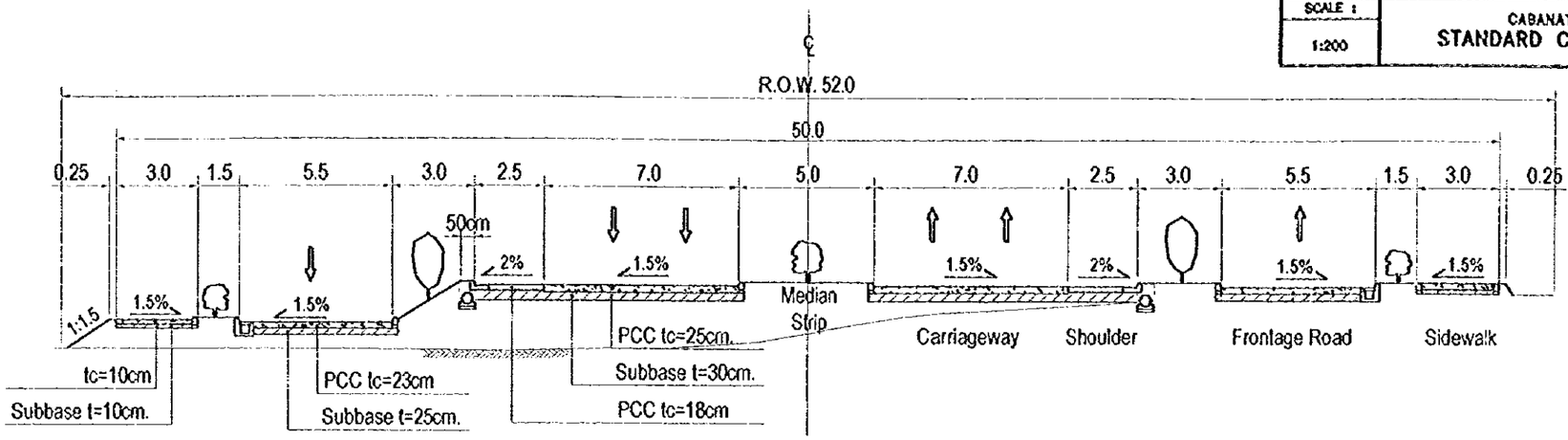

Planned Urban Area (with Frontage Road)

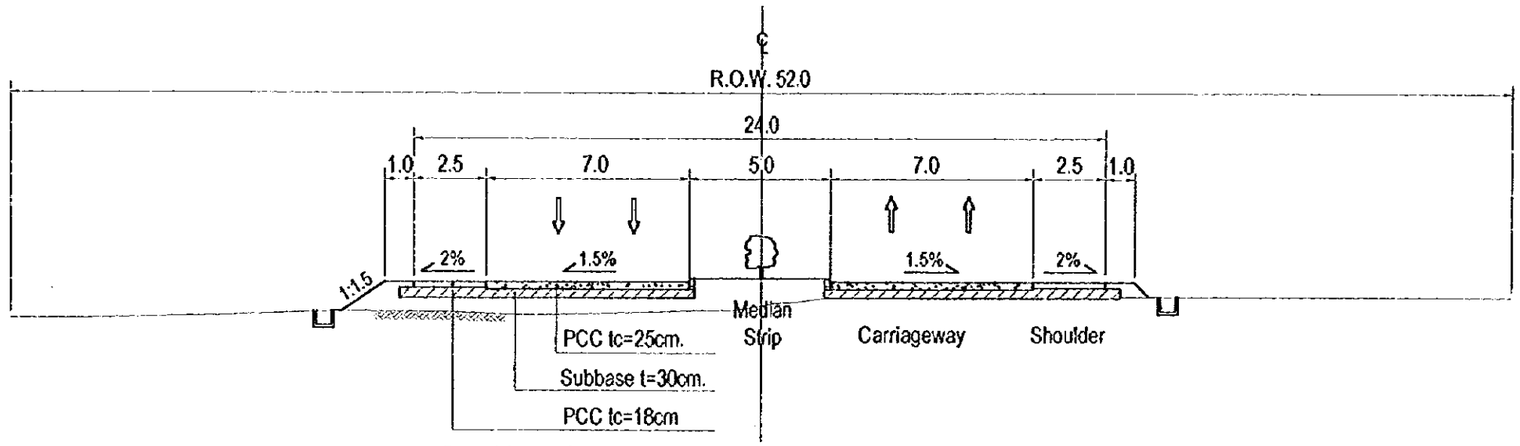

Outskirts of Planned Urban Area (without Frontage Road)

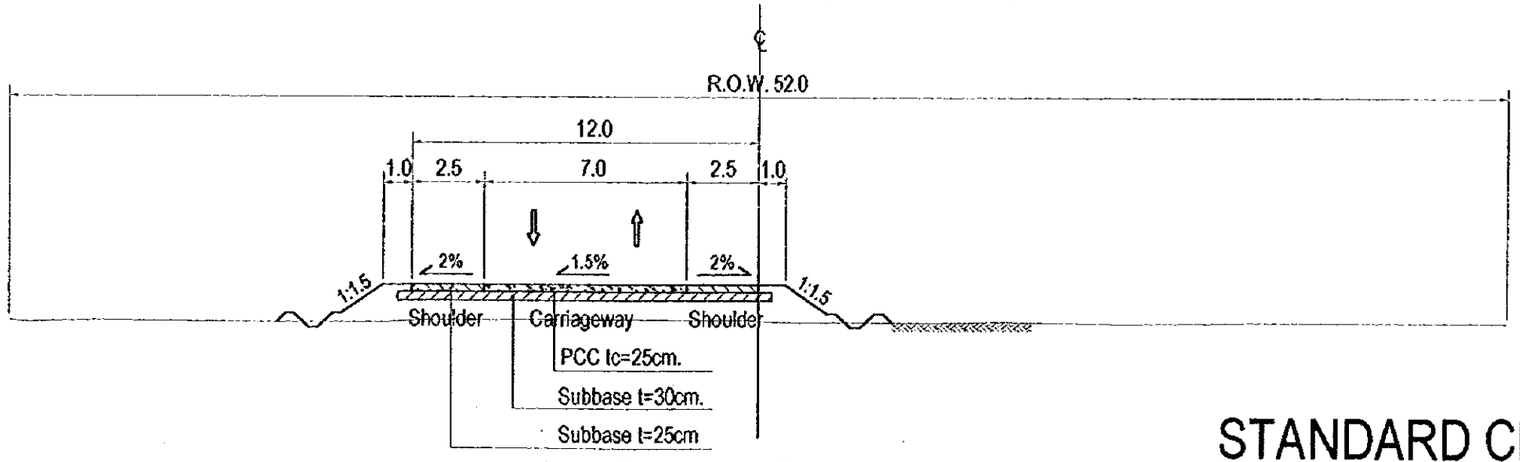

Stage Construction (Two-Lane Road)

STANDARD CROSS SECTION
CABANATUAN BYPASS

THE FEASIBILITY STUDY ON INTER-URBAN HIGHWAY SYSTEM ALONG THE PAN-PHILIPPINE HIGHWAY (STA. RITA, PLARIDEL-SAN JOSE SECTION)

SCALE :	CABANATUAN BYPASS ROUTE	DRAWING NO.
HOR. 1:2500 VER. 1:250	**PLAN AND PROFILE** STA. 0+000 – STA. 1+700	27/68

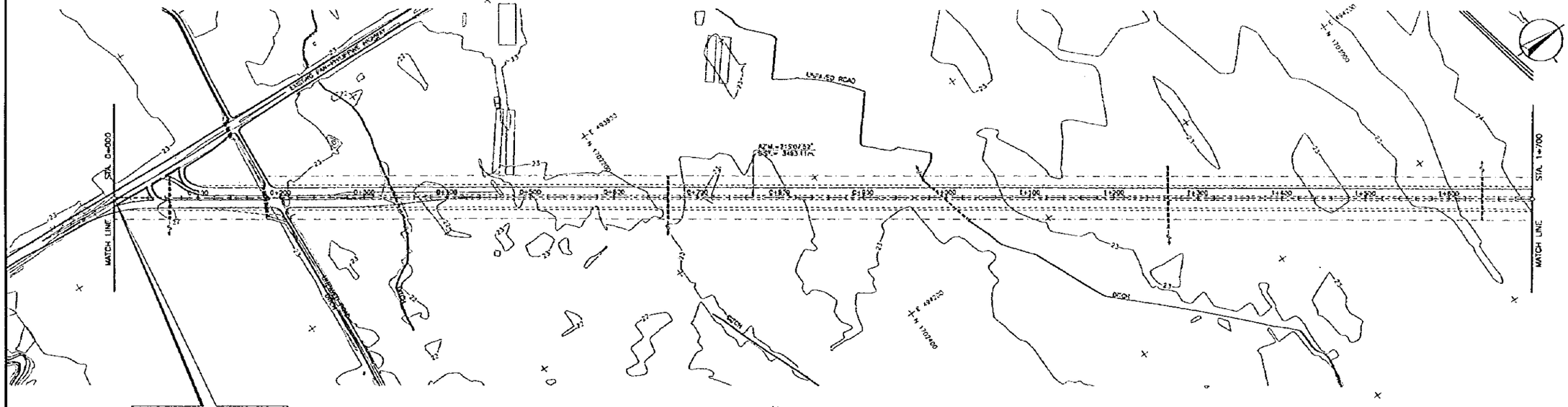

STATION	0+000	0+100	0+200	0+300	0+400	0+500	0+600	0+700	0+800	0+900	1+000	1+100	1+200	1+300	1+400	1+500	1+600	1+700
FINISHED GRADE	24.29	24.23	24.17	24.11	24.06	24.05	24.06	24.11	24.17	24.23	24.29	24.35	24.41	24.47	24.53	24.59	24.65	24.71	24.77	24.83	24.89	24.95	25.01	25.07	25.13	25.19	25.25	25.31	25.37	25.43	25.49	25.55
ORIGINAL GROUND	24.34	23.92	23.52	23.13	22.58	22.69	22.60	22.70	22.85	22.86	23.15	22.75	22.68	22.96	22.84	22.62	22.01	21.83	22.11	21.87	21.96	22.35	22.37	22.10	22.78	22.99	23.06	23.11	23.11	23.05	23.11	23.19	23.04	23.04	23.02	22.73	22.90	23.11	23.03	23.26	23.10	23.15	23.13	22.89	22.70	22.42	22.53	22.88	22.71	22.73	22.74	22.31	22.45	22.77	22.85	22.95	23.05	23.12	23.14	23.15	23.18	23.27	23.28	23.23	23.20	23.16	23.29	23.15	23.14	23.13	23.17	23.19	23.21	23.10	22.99	22.98	23.00	23.02	23.05	23.03	22.97	22.95	22.96	23.06	23.16	23.48	23.85	24.07
HORIZONTAL CURVATURE	NC																	
VERTICAL CURVATURE	+063 LVC=80.00 +143																	

THE FEASIBILITY STUDY ON INTER-URBAN HIGHWAY SYSTEM ALONG THE PAN-PHILIPPINE HIGHWAY (STA. RITA, PLARIDEL-SAN JOSE SECTION)

SCALE :	CABANATUAN BYPASS ROUTE	DRAWING NO.
HOR. 1:2500 VER. 1:250	**PLAN AND PROFILE** STA. 1+700 – STA. 3+400	28/68

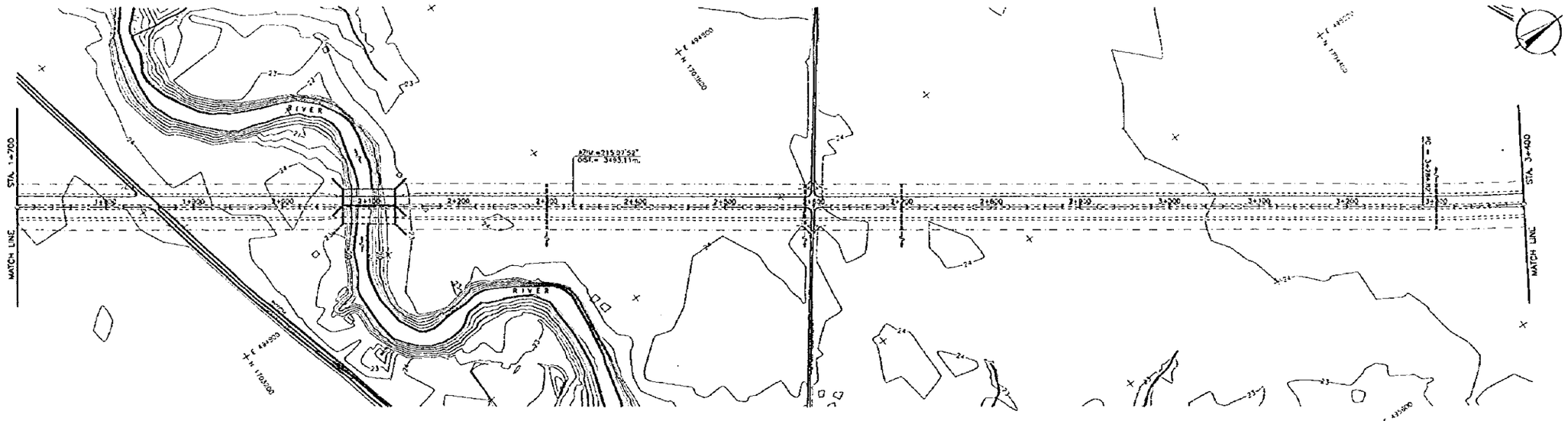

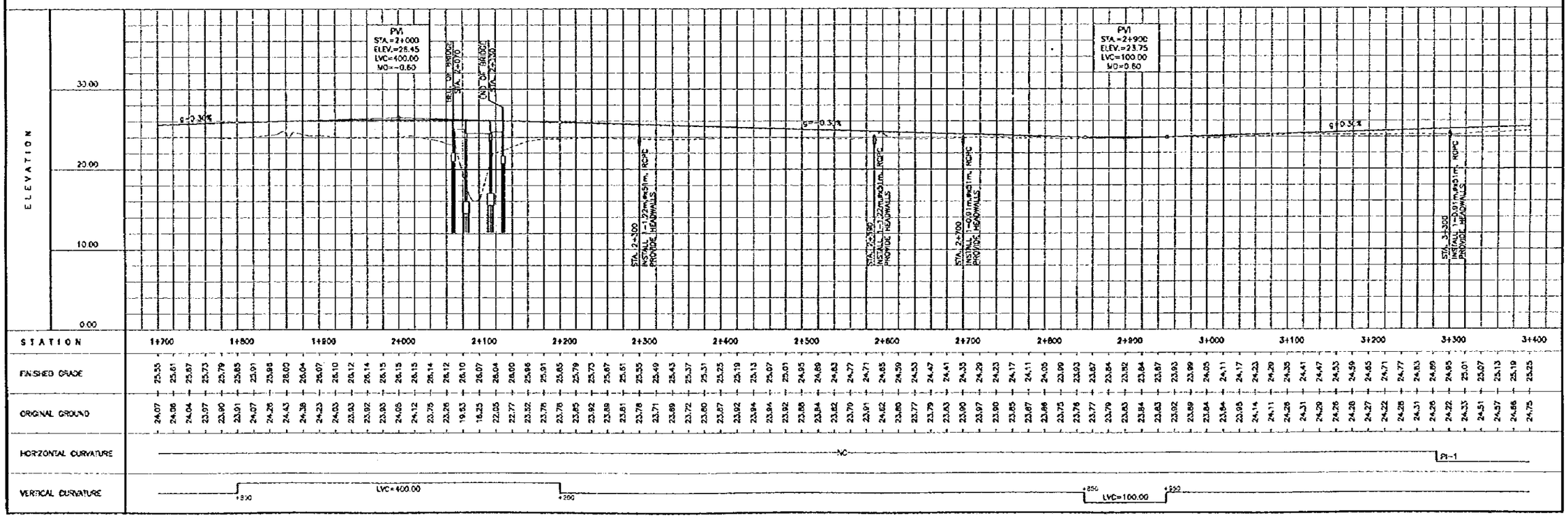

THE FEASIBILITY STUDY ON INTER-URBAN HIGHWAY SYSTEM ALONG THE PAN-PHILIPPINE HIGHWAY (STA. RITA, PLARIDEL-SAN JOSE SECTION)

SCALE :	CABANATUAN BYPASS ROUTE	DRAWING NO.
HOR. 1:2500 VER. 1:250	**PLAN AND PROFILE** STA. 3+400 – STA. 5+100	29/68

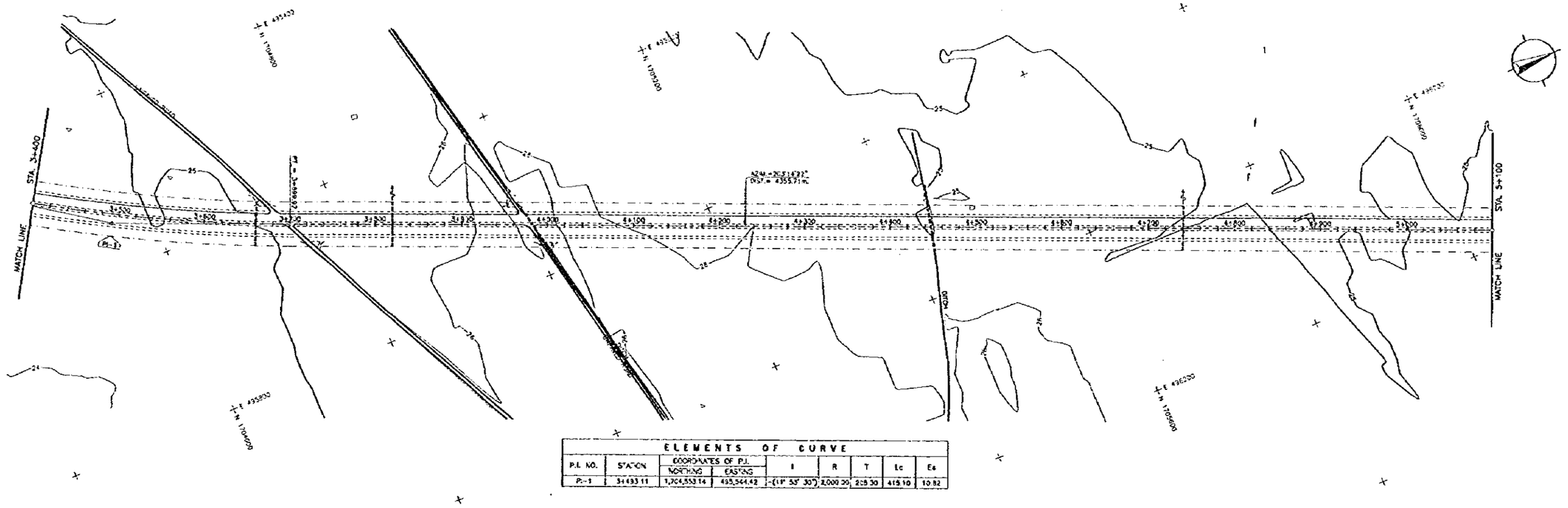

ELEMENTS OF CURVE								
P.I. NO.	STATION	COORDINATES OF P.I.		I	R	T	Lc	Ec
		NORTHING	EASTING					
PI-1	3+693.11	1,704,553.14	495,544.42	(-)11° 55' 30"	2,000.00	208.30	415.10	10.82

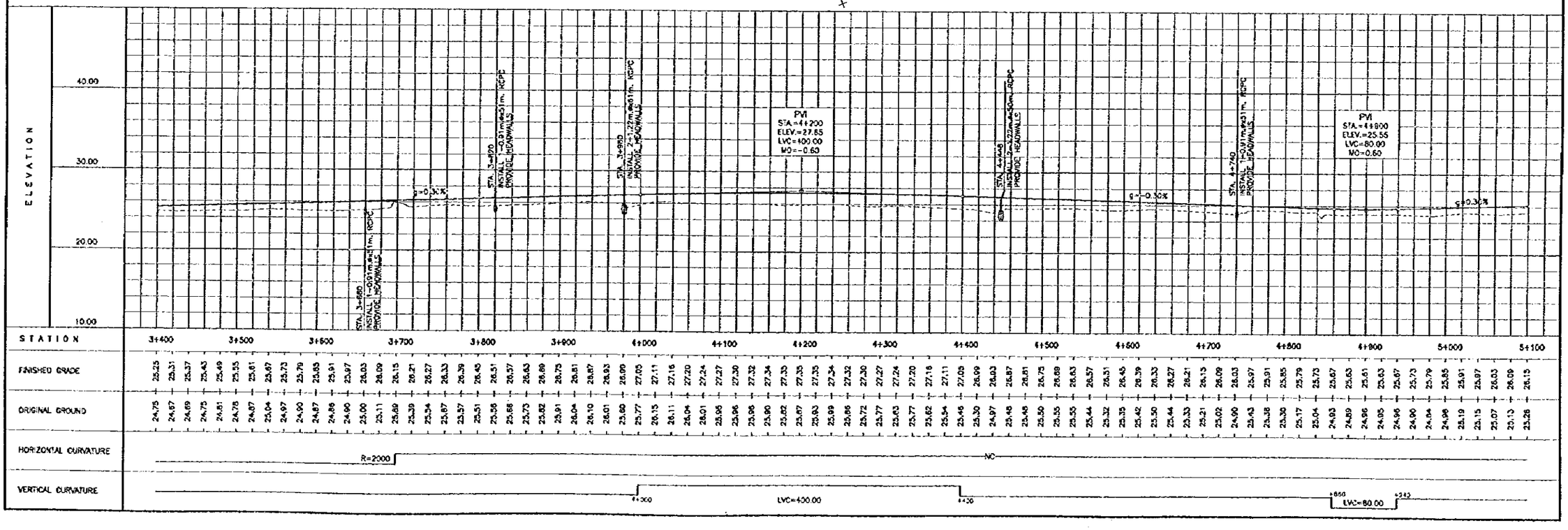

THE FEASIBILITY STUDY ON INTER-URBAN HIGHWAY SYSTEM ALONG THE PAN-PHILIPPINE HIGHWAY (STA. RITA, PLARIDEL-SAN JOSE SECTION)

SCALE :	CABANATUAN BYPASS ROUTE	DRAWING NO.
HOR. 1:2500 VER. 1:250	**PLAN AND PROFILE** STA. 5+100 – STA. 6+800	30/68

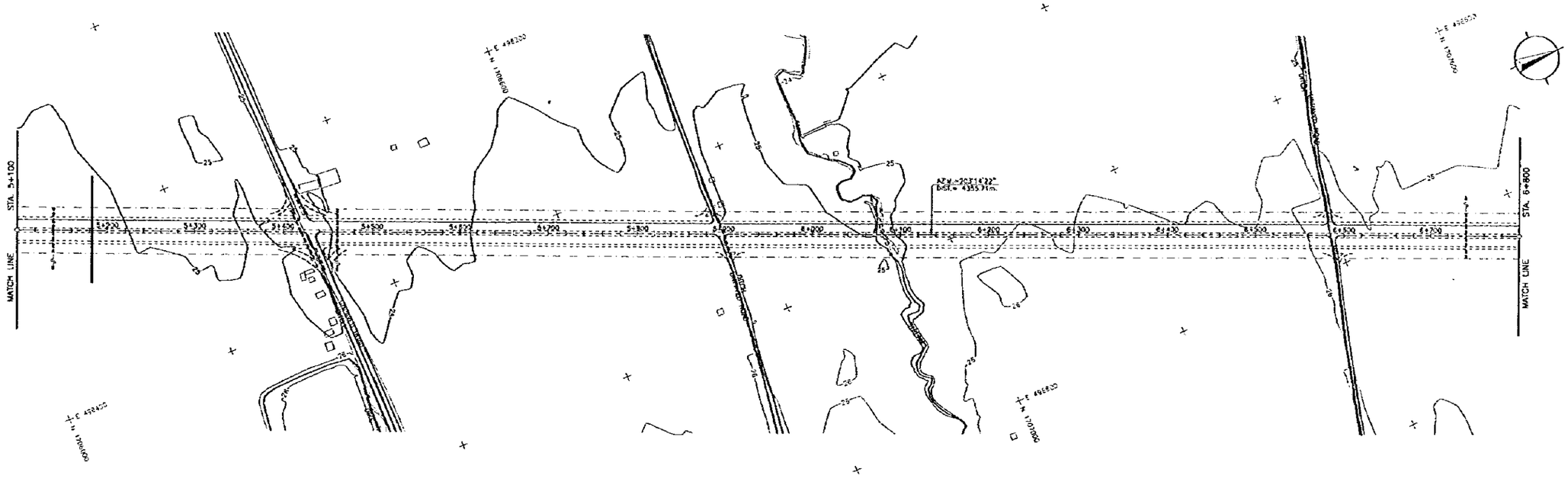

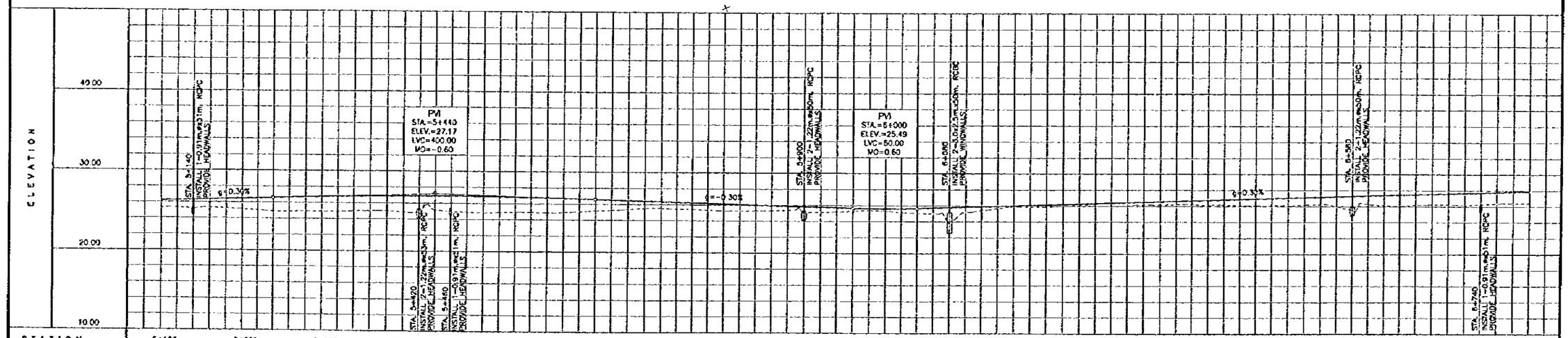

STATION	5+100	5+200	5+300	5+400	5+500	5+600	5+700	5+800	5+900	6+000	6+100	6+200	6+300	6+400	6+500	6+600	6+700	6+800
FINISHED GRADE	26.15	26.21	26.27	26.33	26.39	26.45	26.51	26.57	26.63	26.68	26.72	26.76	26.80	26.82	26.84	26.86	26.87	26.87	26.87	26.87	26.86	26.84	26.82	26.80	26.78	26.72	26.68	26.63	26.57	26.51	26.45	26.39	26.33	26.27	26.21	26.15	26.09	26.03	25.97	25.91	25.85	25.79	25.73	25.67	25.61	25.56	25.55	25.56	25.61	25.67	25.73	25.79	25.85	25.91	25.97	26.03	26.09	26.15	26.21	26.27	26.33	26.39	26.45	26.51	26.57	26.63	26.69	26.75	26.81	26.87	26.93	26.99	27.05	27.11	27.17	27.23	27.29	27.35	27.41	27.47	27.53	27.59	27.65	27.71	27.77	27.83	27.89
ORIGINAL GROUND	25.26	25.30	25.18	25.32	25.23	25.14	25.02	24.90	24.90	24.92	24.88	24.90	24.98	25.01	24.99	24.87	24.74	25.14	24.95	24.67	24.80	24.90	24.84	24.92	24.88	24.92	25.05	25.15	25.23	25.34	25.49	25.52	25.44	25.41	25.21	25.15	25.33	25.26	25.25	25.26	25.29	25.37	25.06	25.11	25.15	25.25	25.37	25.26	25.13	25.04	24.96	23.96	23.16	23.39	23.67	23.88	23.87	23.87	23.98	26.00	26.04	25.84	26.04	26.04	26.14	26.11	26.18	26.19	26.10	26.14	26.10	26.09	26.07	26.08	26.17	26.24	25.97	25.50	26.26	26.10	26.04	26.14	26.23	20.21	26.13	26.25	26.37	26.40	26.39
HORIZONTAL CURVATURE	NC		

THE FEASIBILITY STUDY ON INTER-URBAN HIGHWAY SYSTEM ALONG THE PAN-PHILIPPINE HIGHWAY (STA. RITA, PLARIDEL-SAN JOSE SECTION)

SCALE :	CABANATUAN BYPASS ROUTE	DRAWING NO.
HOR. 1:2500 VER. 1:250	**PLAN AND PROFILE** STA. 6+800 – STA. 8+500	31/68

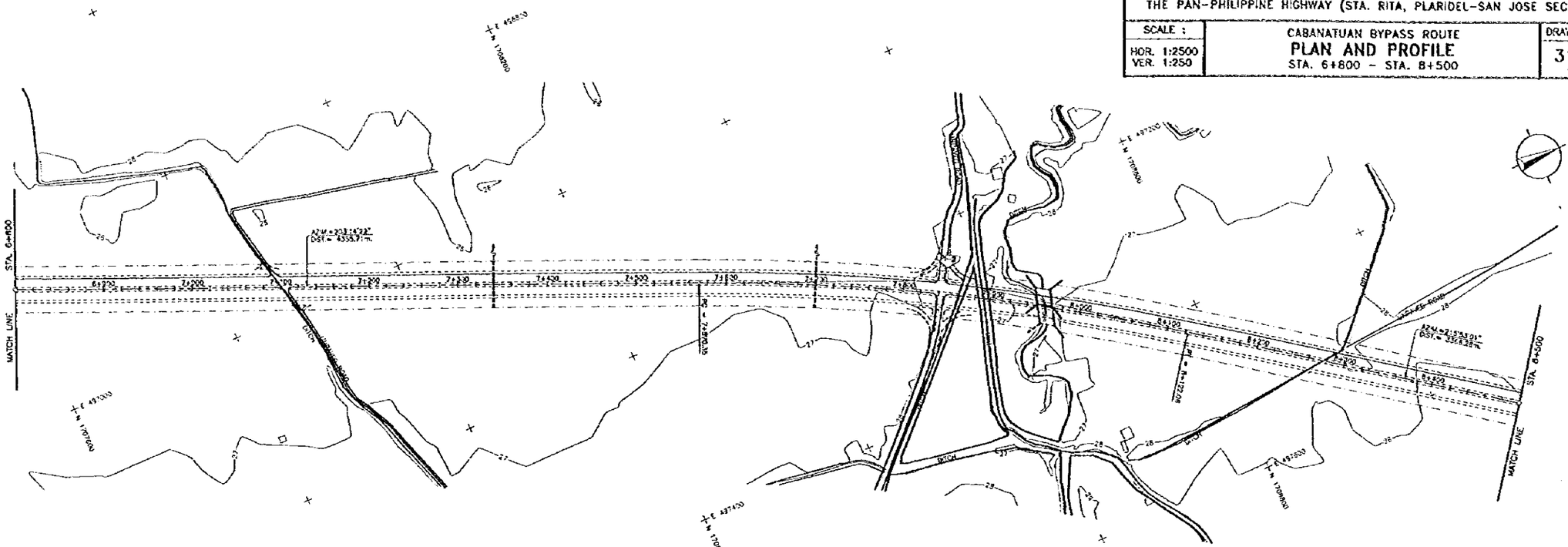
STA. 6+800
MATCH LINE
STA. 8+500
MATCH LINE
PI = 7+470.35
RIGHT
RIGHT
RIGHT

THE FEASIBILITY STUDY ON INTER-URBAN HIGHWAY SYSTEM ALONG THE PAN-PHILIPPINE HIGHWAY (STA. RITA, PLARIDEL-SAN JOSE SECTION)

SCALE :	CABANATUAN BYPASS ROUTE	DRAWING NO.
HOR. 1:2500 VER. 1:250	**PLAN AND PROFILE** STA. 8+500 – STA. 10+200	32/68

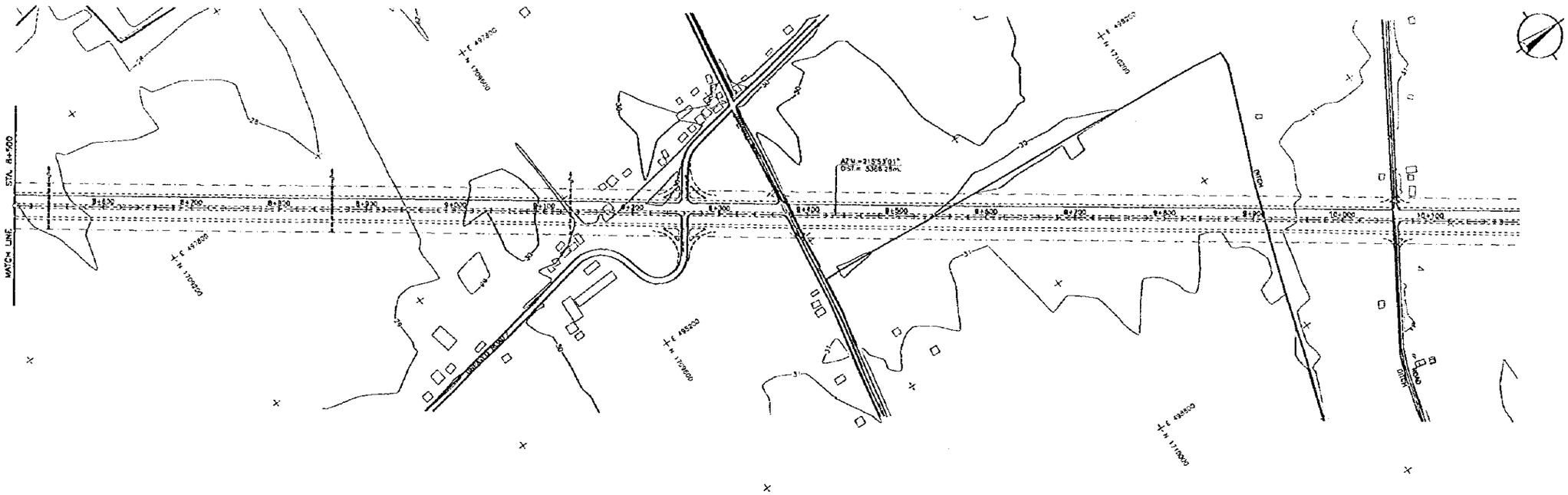

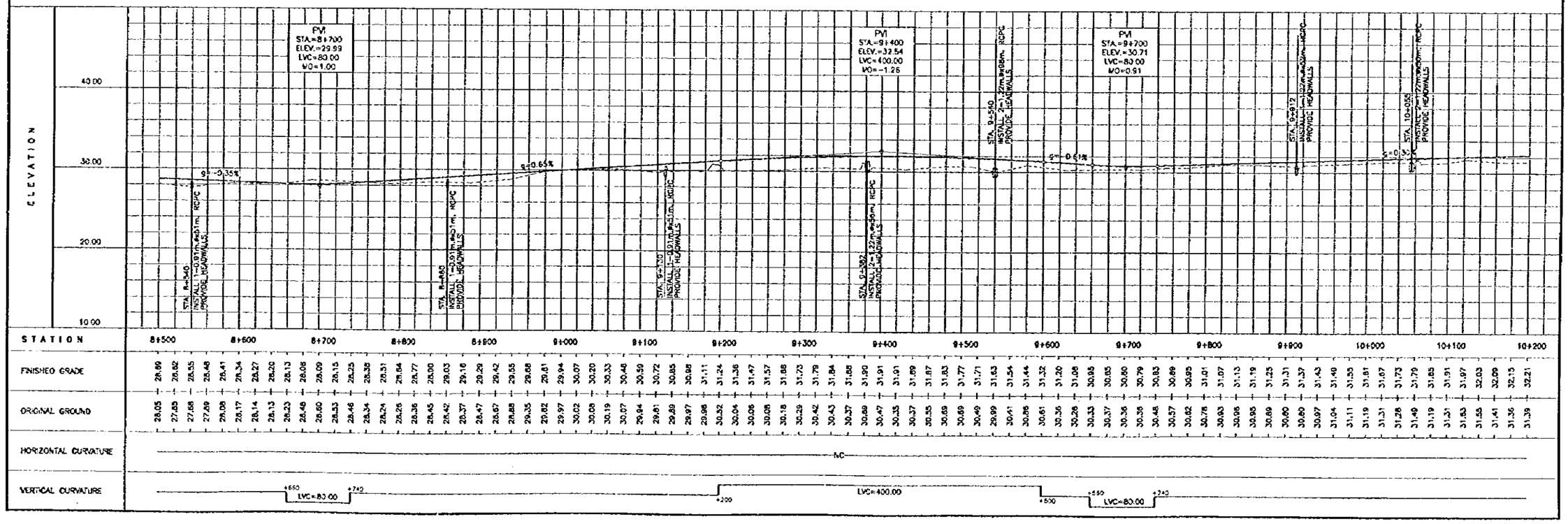

THE FEASIBILITY STUDY ON INTER-URBAN HIGHWAY SYSTEM ALONG THE PAN-PHILIPPINE HIGHWAY (STA. RITA, PLARIDEL-SAN JOSE SECTION)

SCALE :	CABANATUAN BYPASS ROUTE	DRAWING NO.
HOR. 1:2500 VER. 1:250	**PLAN AND PROFILE** STA. 10+200 – STA. 11+900	33/68

ELEMENTS OF CURVE								
P.I. NO.	STATION	COORDINATES OF P.I.		I	R	T	Lc	Ec
		NORTHING	EASTING					
P-3	11+211.36	1,711,282.84	439,235.19	34° 55' 24"	2,000.00	629.13	1218.68	85.62

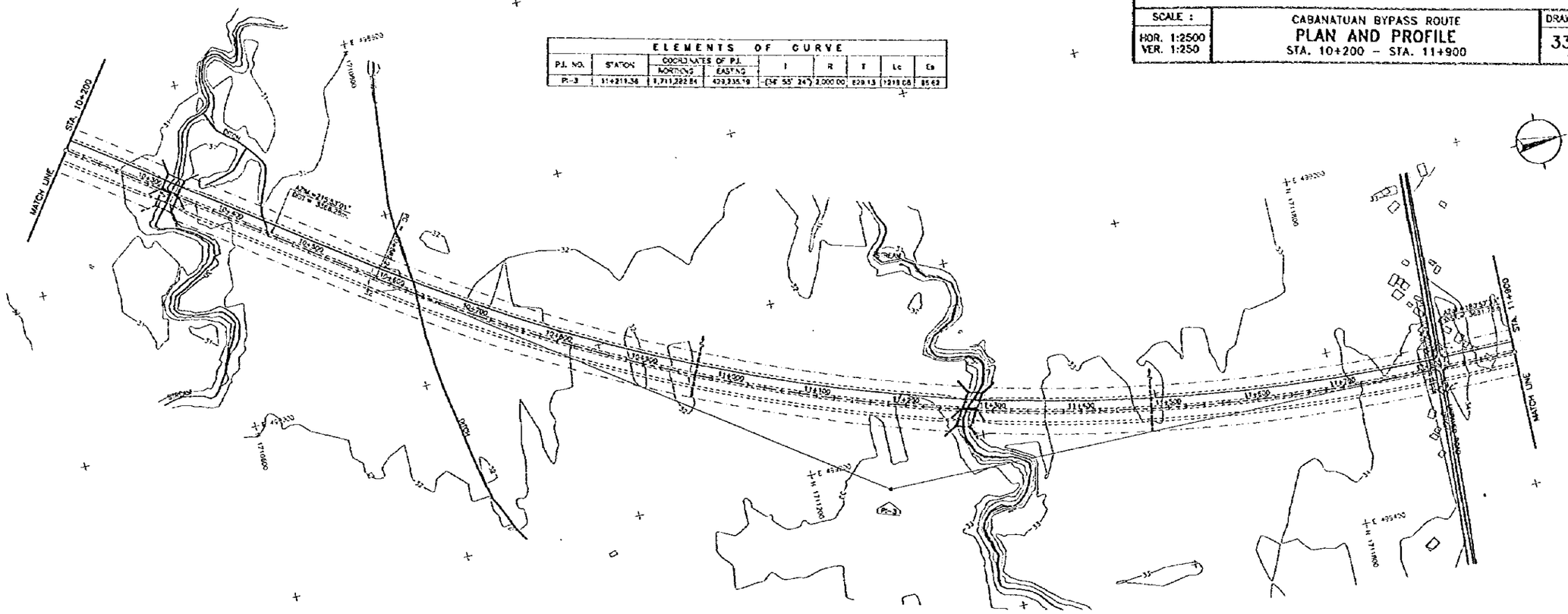

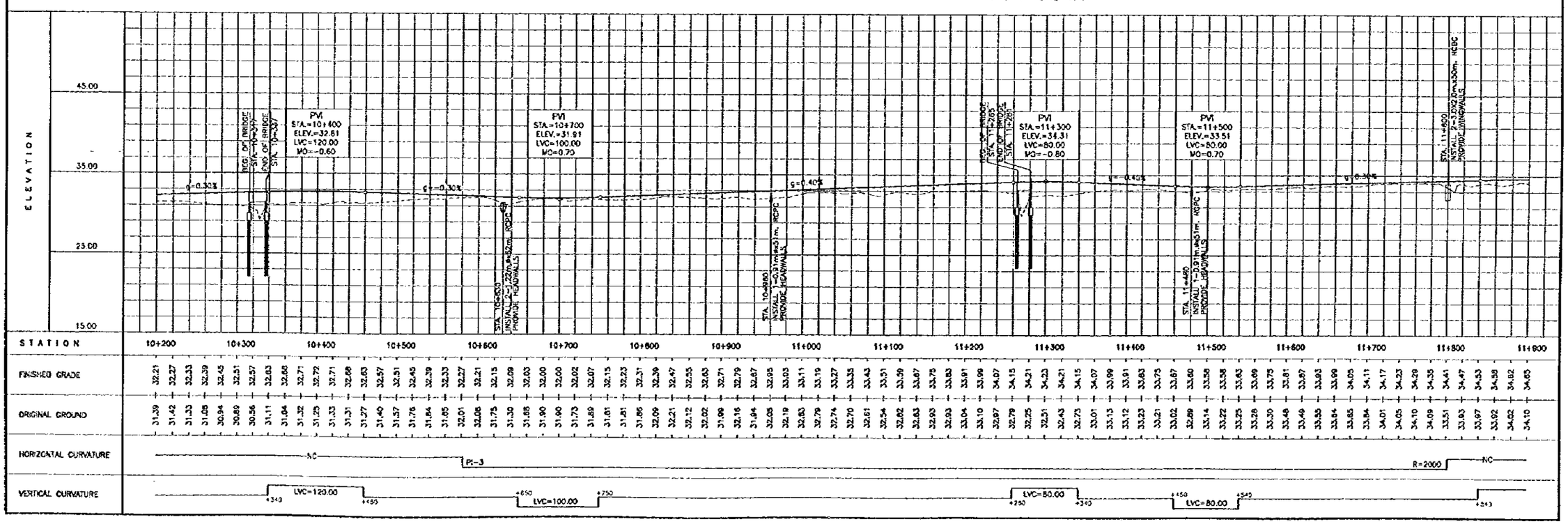

THE FEASIBILITY STUDY ON INTER-URBAN HIGHWAY SYSTEM ALONG THE PAN-PHILIPPINE HIGHWAY (STA. RITA, PLARIDEL-SAN JOSE SECTION)

SCALE :	CABANATUAN BYPASS ROUTE	DRAWING NO.
HOR. 1:2500 VER. 1:250	**PLAN AND PROFILE** STA. 11+900 – STA. 13+600	34/68

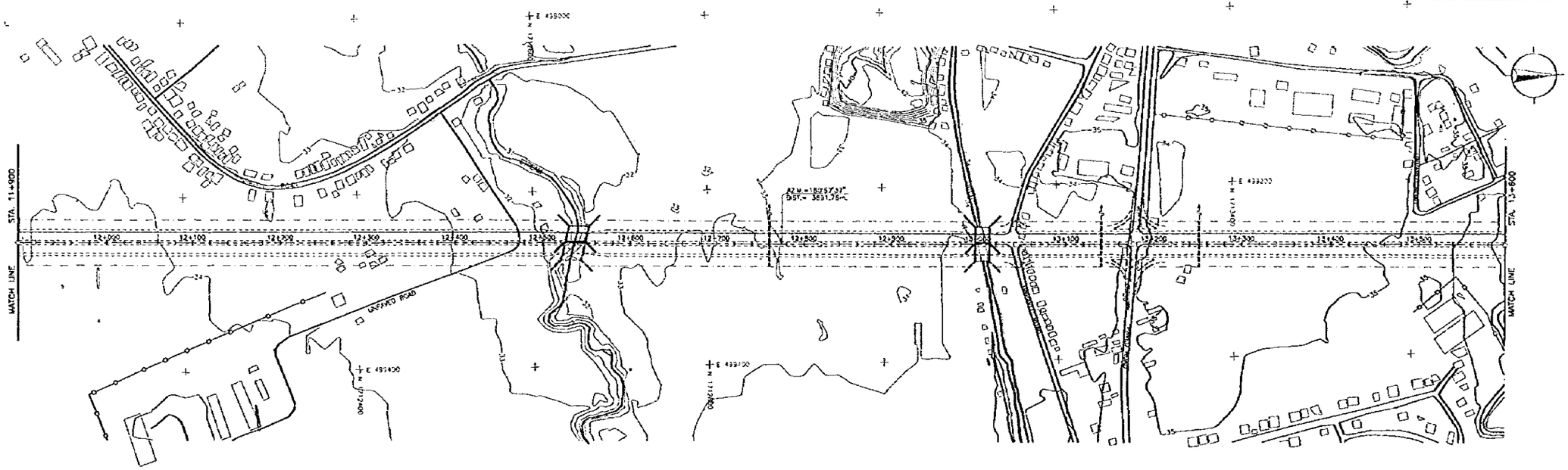

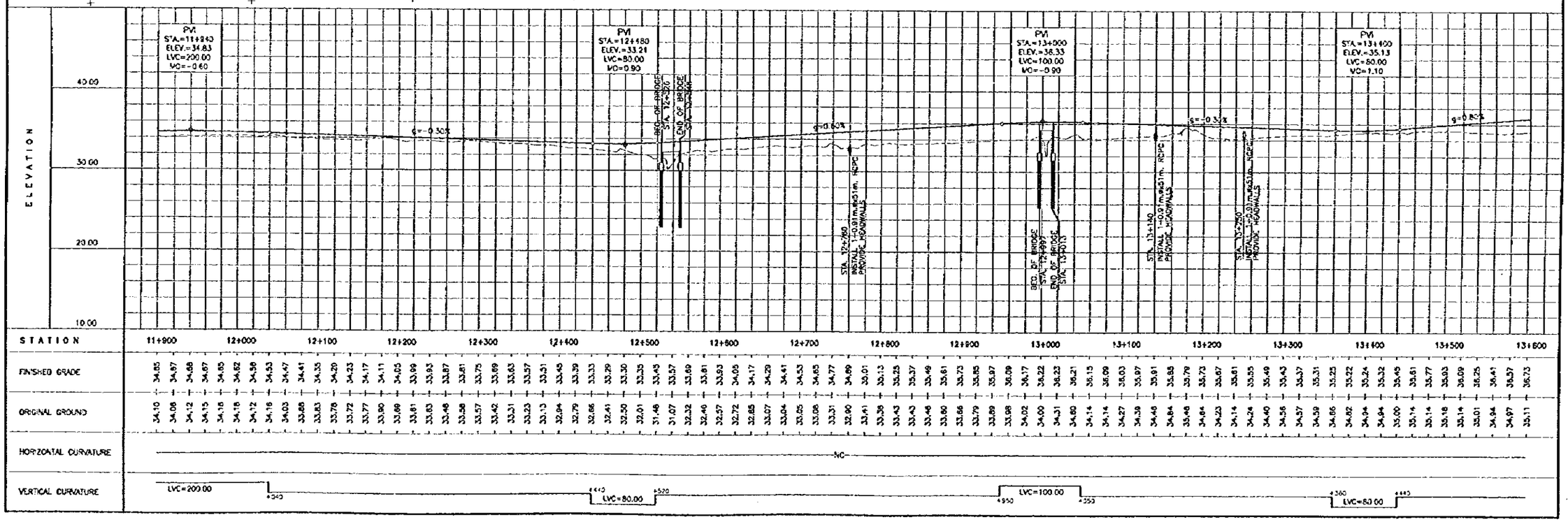

THE FEASIBILITY STUDY ON INTER-URBAN HIGHWAY SYSTEM ALONG THE PAN-PHILIPPINE HIGHWAY (STA. RITA, PLARIDEL-SAN JOSE SECTION)

SCALE :	CABANATUAN BYPASS ROUTE	DRAWING NO.
HOR. 1:2500 VER. 1:250	**PLAN AND PROFILE** STA. 13+600 – STA. 15+300	35/68

ELEMENTS OF CURVE								
P.I. NO.	STATION	COORDINATES OF P.I.		I	R	T	Lc	Ec
		NORTHING	EASTING					
PI-4	14+863.93	1,714,874.08	459,295.05	(37° 09' 25")	2,000.00	672.24	1267.02	129.95

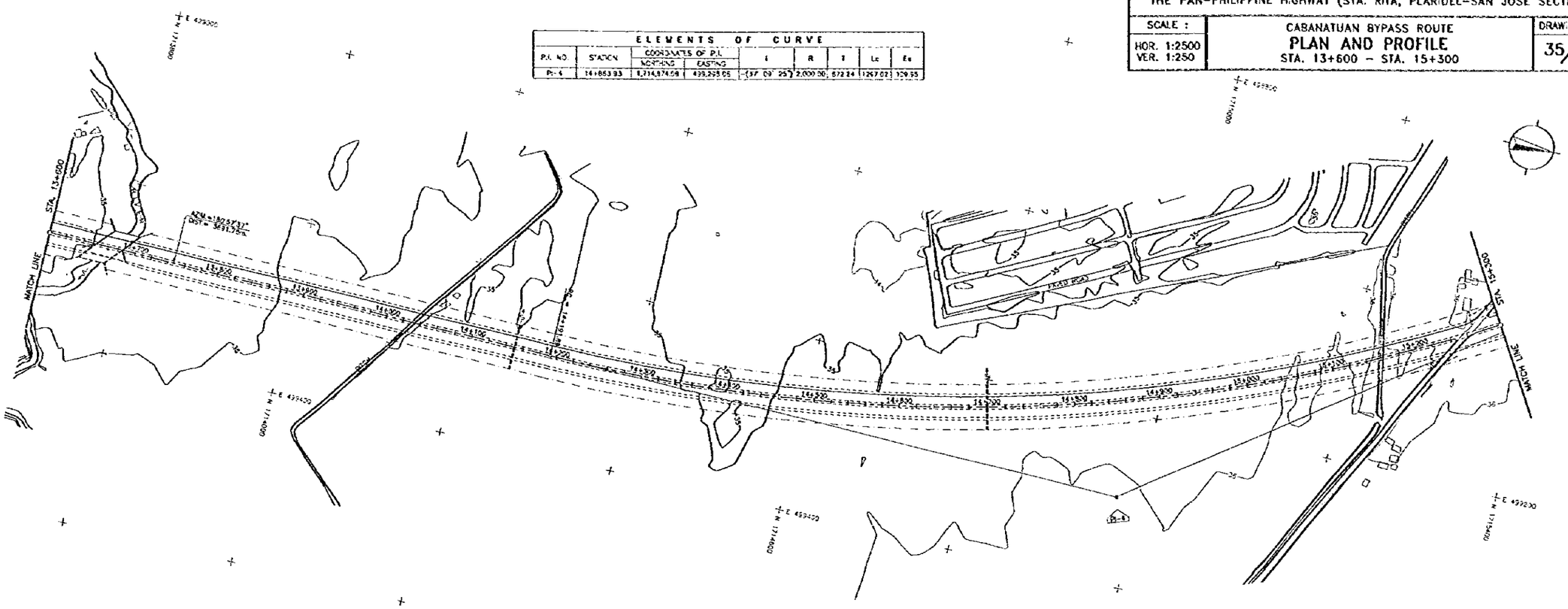

THE FEASIBILITY STUDY ON INTER-URBAN HIGHWAY SYSTEM ALONG THE PAN-PHILIPPINE HIGHWAY (STA. RITA, PLARIDEL-SAN JOSE SECTION)

SCALE :	CABANATUAN BYPASS ROUTE	DRAWING NO.
HOR. 1:2500 VER. 1:250	**PLAN AND PROFILE** STA. 15+300 – STA. 17+000	36/68

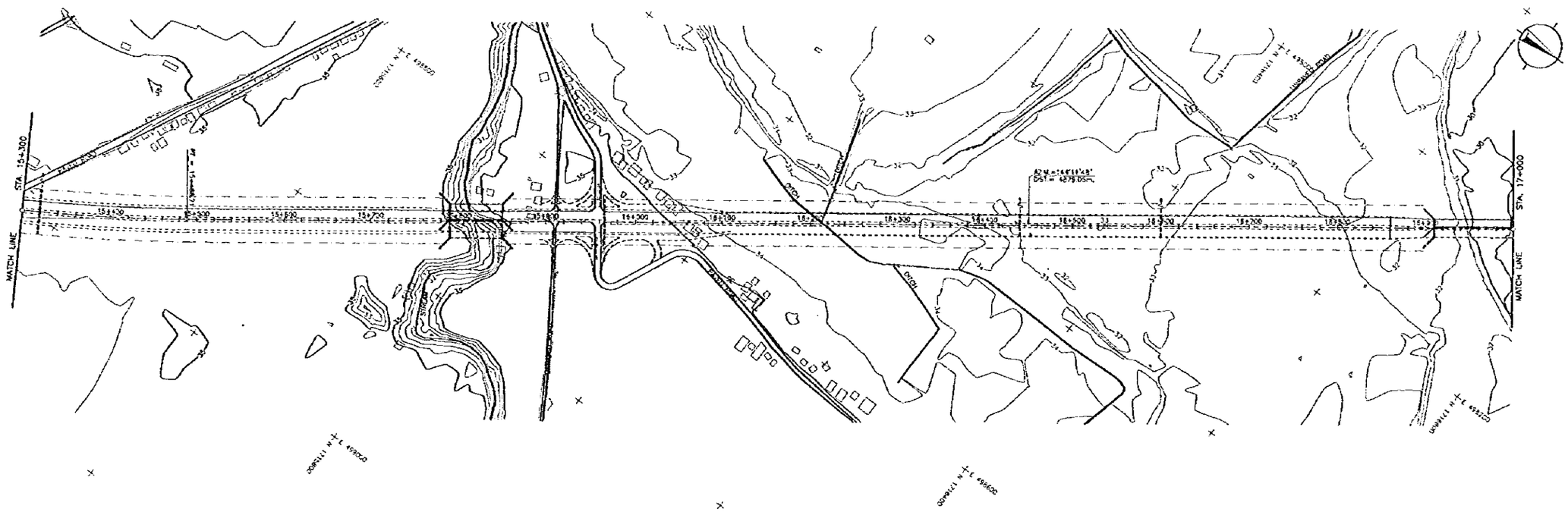
STA 15+300
STA. 17+000
MATCH LINE
MATCH LINE
DOMELLI N+E 498500
DOMELLI N+E 498520
DOMELLI N+E 498600
DOMELLI N+E 498620
HIGHWAY FROM
SAN JOSE
OCHOA
OCHOA
OCHOA

THE FEASIBILITY STUDY ON INTER-URBAN HIGHWAY SYSTEM ALONG THE PAN-PHILIPPINE HIGHWAY (STA. RITA, PLARIDEL-SAN JOSE SECTION)

SCALE :	CABANATUAN BYPASS ROUTE	DRAWING NO.
HOR. 1:2500 VER. 1:250	**PLAN AND PROFILE** STA. 17+000 -- STA. 18+700	37/68

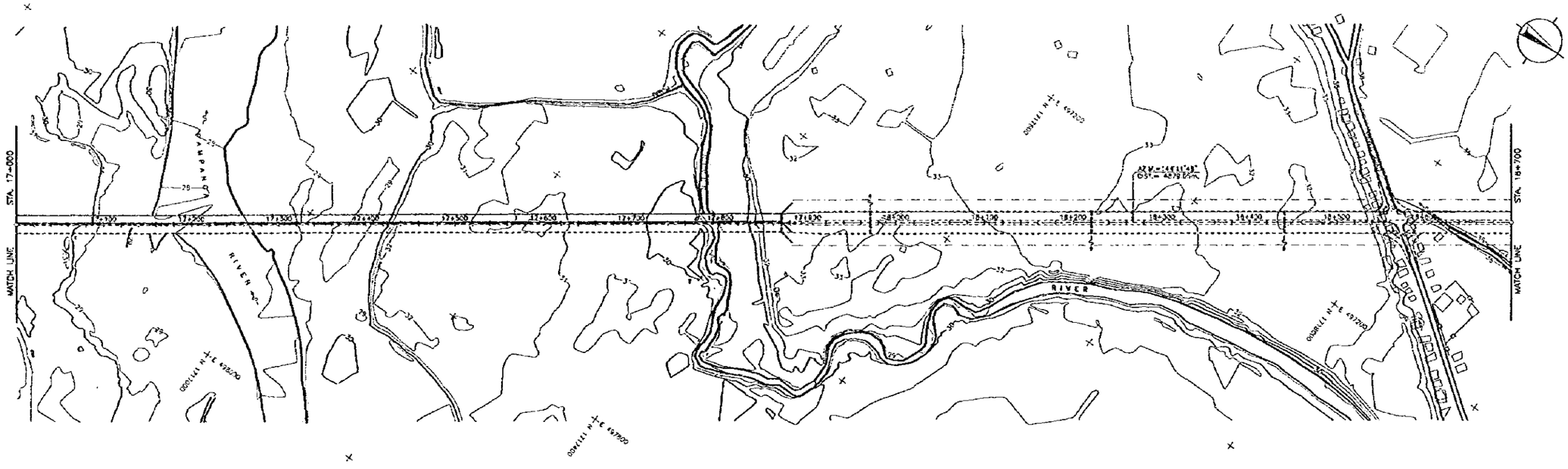

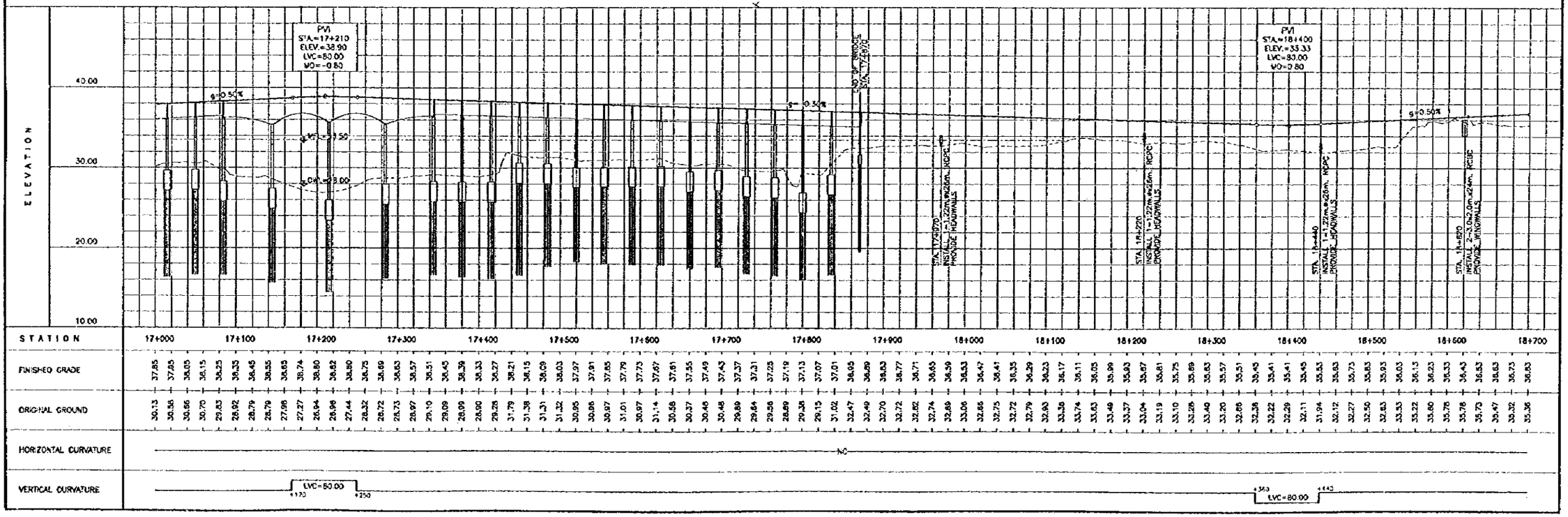

THE FEASIBILITY STUDY ON INTER-URBAN HIGHWAY SYSTEM ALONG THE PAN-PHILIPPINE HIGHWAY (STA. RITA, PLARIDEL-SAN JOSE SECTION)

SCALE :	CABANATUAN BYPASS ROUTE	DRAWING NO.
HOR. 1:2500 VER. 1:250	**PLAN AND PROFILE** STA. 18+700 – STA. 20+400	38/68

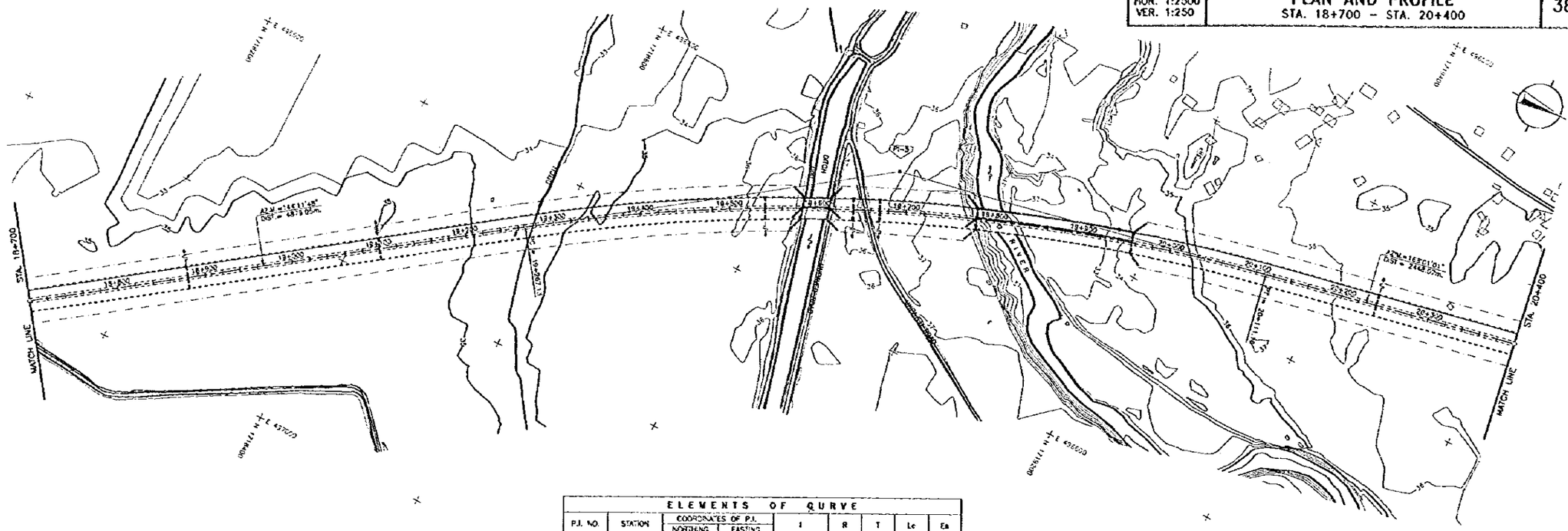

ELEMENTS OF CURVE								
P.I. NO.	STATION	COORDINATES OF P.I.		I	R	T	Lc	Ea
		NORTHING	EASTING					
PI-5	19+595.52	1,718,811.45	458,418.70	24° 10' 47"	2,000.00	428.39	844.03	45.37

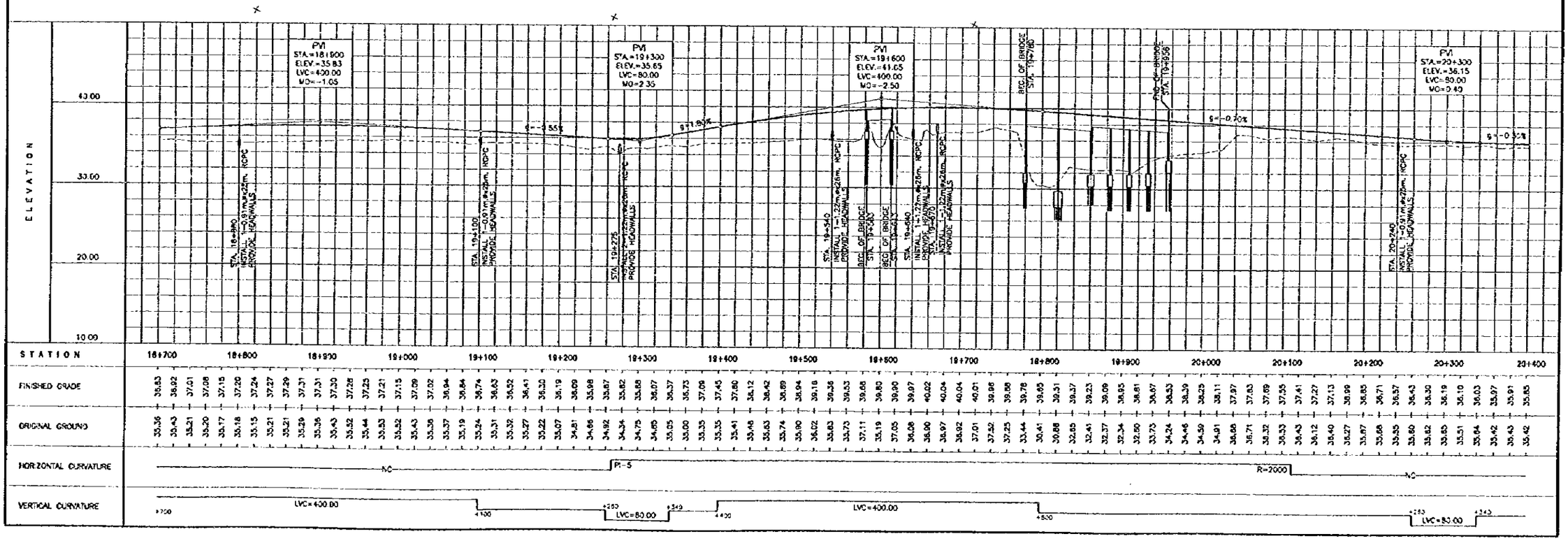

THE FEASIBILITY STUDY ON INTER-URBAN HIGHWAY SYSTEM ALONG THE PAN-PHILIPPINE HIGHWAY (STA. RITA, PLARIDEL-SAN JOSE SECTION)

SCALE :	CABANATUAN BYPASS ROUTE	DRAWING NO.
HOR. 1:2500 VER. 1:250	**PLAN AND PROFILE** STA. 20+400 – STA. 22+100	39/68

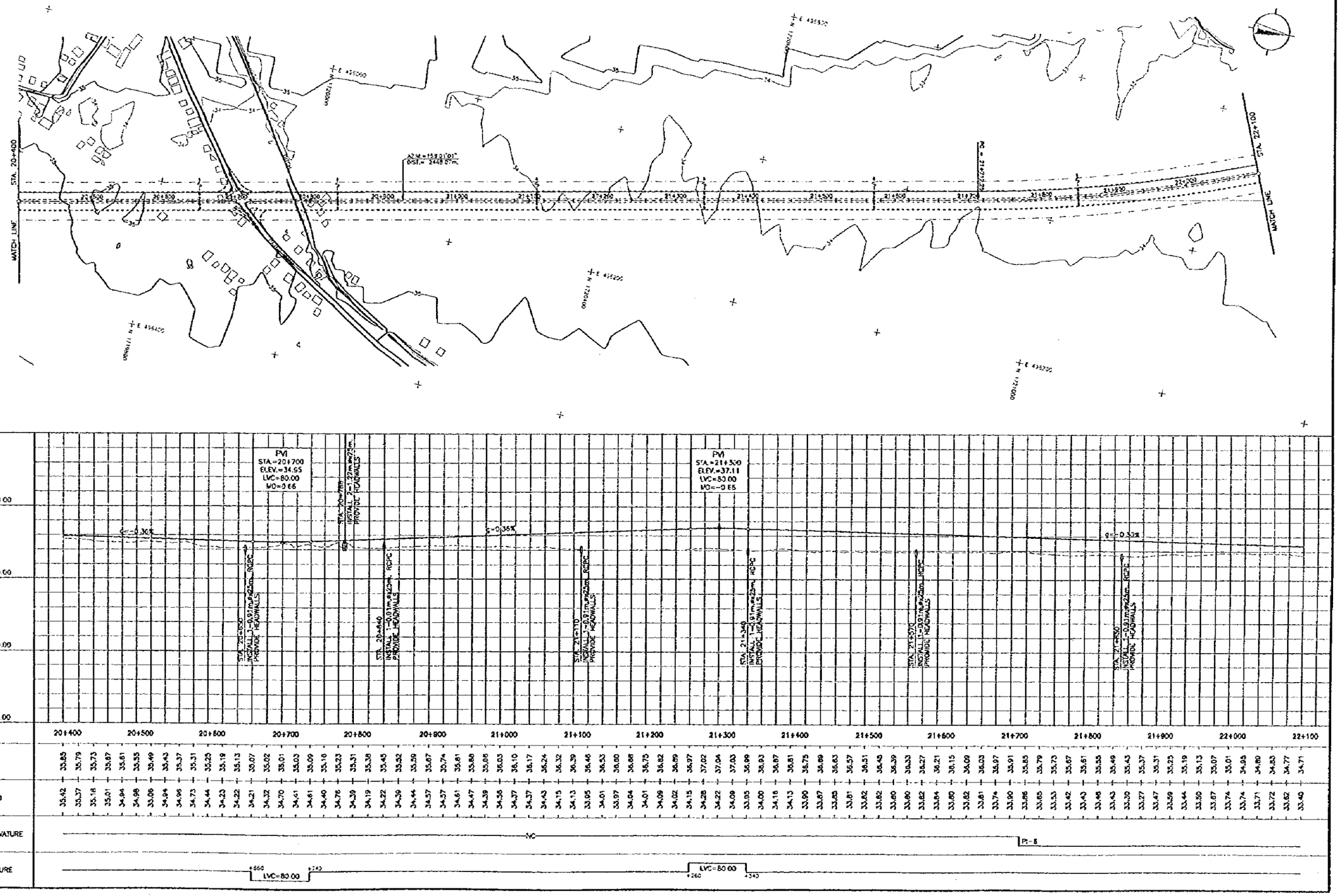

THE FEASIBILITY STUDY ON INTER-URBAN HIGHWAY SYSTEM ALONG THE PAN-PHILIPPINE HIGHWAY (STA. RITA, PLARIDEL-SAN JOSE SECTION)

SCALE :	CABANATUAN BYPASS ROUTE	DRAWING NO.
HOR. 1:2500 VER. 1:250	**PLAN AND PROFILE** STA. 22+100 – STA. 23+800	40/68

ELEMENTS OF CURVE								
P.I. NO.	STATION	COORDINATES OF P.I. NORTHING	COORDINATES OF P.I. EASTING	I	R	T	Lc	Ec
PI-8	22+130.83	1,721,305.87	495,937.01	23° 38' 31"	2,000.00	418.54	825.28	43.33

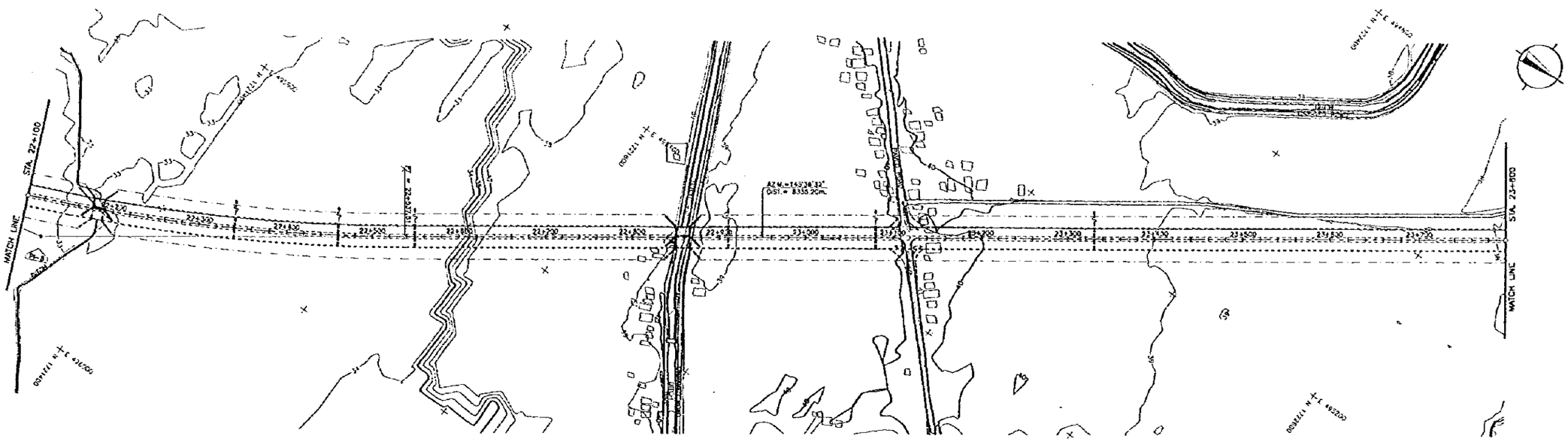

STATION	22+100	22+200	22+300	22+400	22+500	22+600	22+700	22+800	22+900	23+000	23+100	23+200	23+300	23+400	23+500	23+600	23+700	23+800
FINISHED GRADE	34.71	34.65	34.59	34.53	34.47	34.41	34.35	34.29	34.23	34.17	34.11	34.05	33.99	33.93	33.92	34.02	34.21	34.51
	34.86	35.21	35.56	35.91	36.26	36.61	36.96	37.31	37.66	38.01	38.36	38.71	39.06	39.41	39.76	40.11	40.46	40.81
	41.16	41.51	41.86	42.15	42.33	42.38	42.32	42.20	42.06	41.91	41.75	41.60	41.46	41.36	41.24	41.12	41.00	40.88
	40.76	40.64	40.52	40.40	40.28	40.16	40.04	39.92	39.80	39.71	39.67	39.68	39.74	39.83	39.92	40.01	40.10	40.19
	40.28	40.37	40.46	40.55	40.64	40.73	40.82	40.91	41.00	41.09	41.18	41.27	41.36					
ORIGINAL GROUND	33.40	33.16	33.08	32.91	32.49	33.01	33.06	33.19	33.20	33.15	33.22	33.27	33.11	33.22	33.28	33.27	33.34	33.42
	33.42	33.41	33.42	33.53	33.59	33.56	33.67	33.68	37.57	38.06	38.18	38.32	38.29	38.52	38.50	38.48	38.67	38.71
	38.68	38.96	38.97	38.94	38.87	39.01	39.12	39.22	39.31	39.35	39.41	39.39	39.42	39.35	39.59	40.09	40.08	40.11
	40.02	39.80	39.68	39.57	39.55	39.37	39.25	39.27	39.38	39.16	39.07	38.78	38.77	38.77	38.74	38.77	38.77	38.77
	38.77	38.66	38.63	38.52	38.53	38.45	38.60	38.46	38.48	38.54	38.36	38.11	38.11	37.77				
HORIZONTAL CURVATURE	R=2000												NC					
VERTICAL CURVATURE	4350 LVC=80.00 4442								4760 LVC=80.00 4840					4360 LVC=80.00 4440				

THE FEASIBILITY STUDY ON INTER-URBAN HIGHWAY SYSTEM ALONG THE PAN-PHILIPPINE HIGHWAY (STA. RITA, PLARIDEL-SAN JOSE SECTION)

SCALE :	CABANATUAN BYPASS ROUTE	DRAWING NO.
HOR. 1:2500 VER. 1:250	**PLAN AND PROFILE** STA. 23+800 - STA. 25+500	41/68

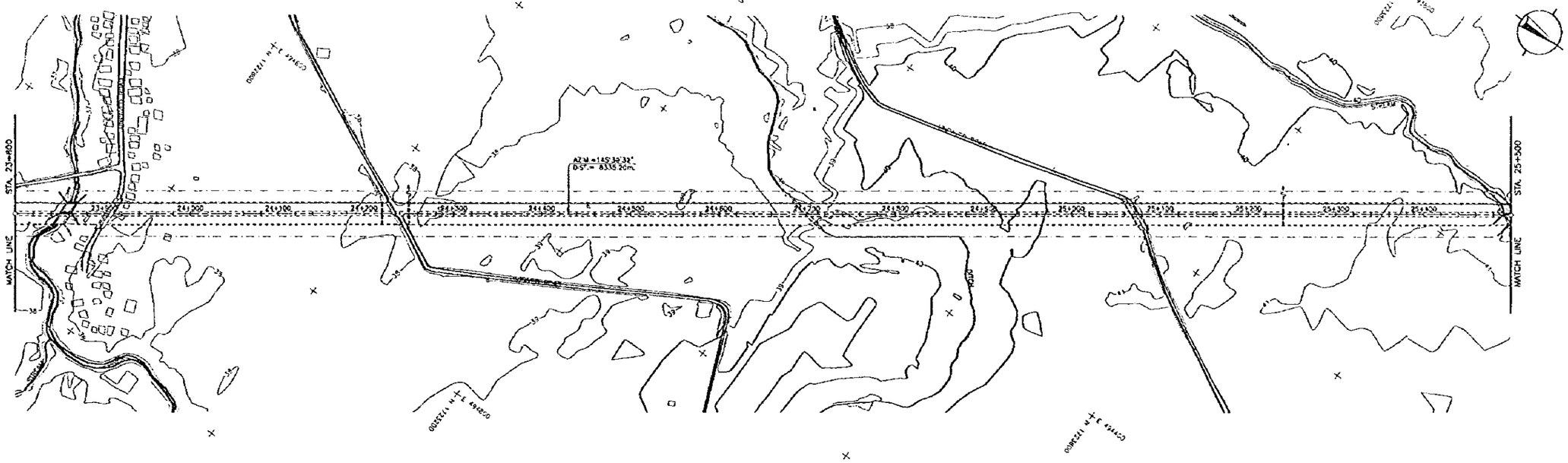

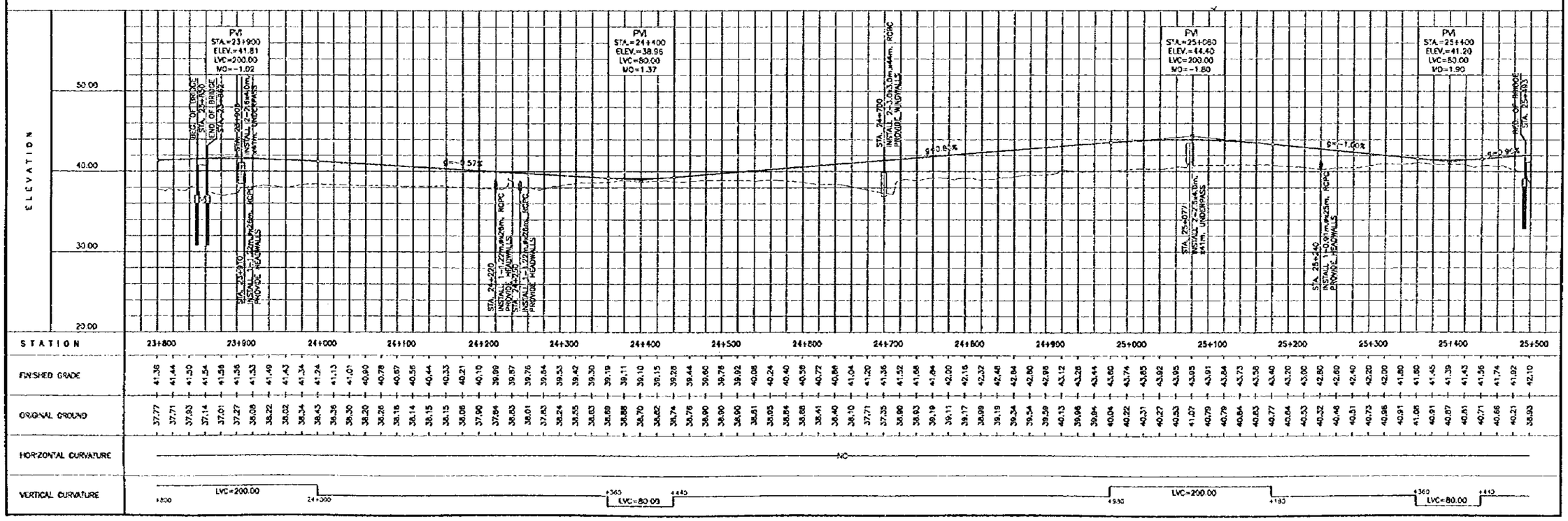

THE FEASIBILITY STUDY ON INTER-URBAN HIGHWAY SYSTEM ALONG THE PAN-PHILIPPINE HIGHWAY (STA. RITA, PLARIDEL-SAN JOSE SECTION)

SCALE :	CABANATUAN BYPASS ROUTE	DRAWING NO.
HOR. 1:2500 VER. 1:250	**PLAN AND PROFILE** STA. 25+500 - STA. 27+200	42/68

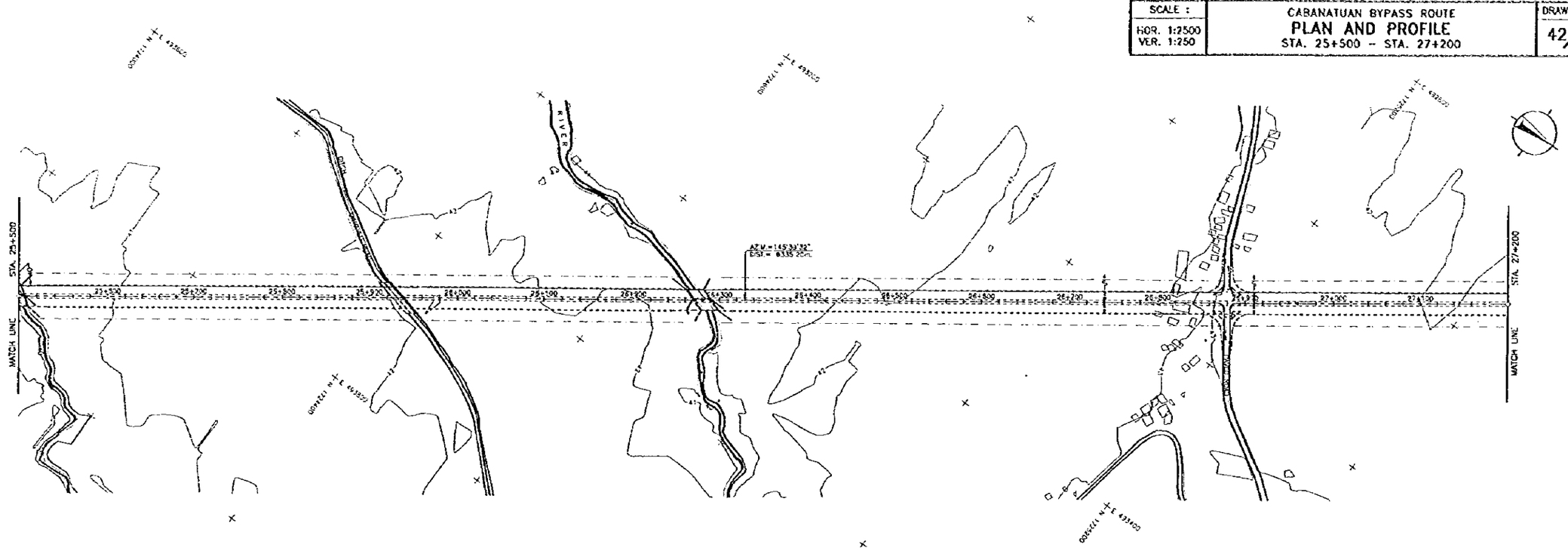

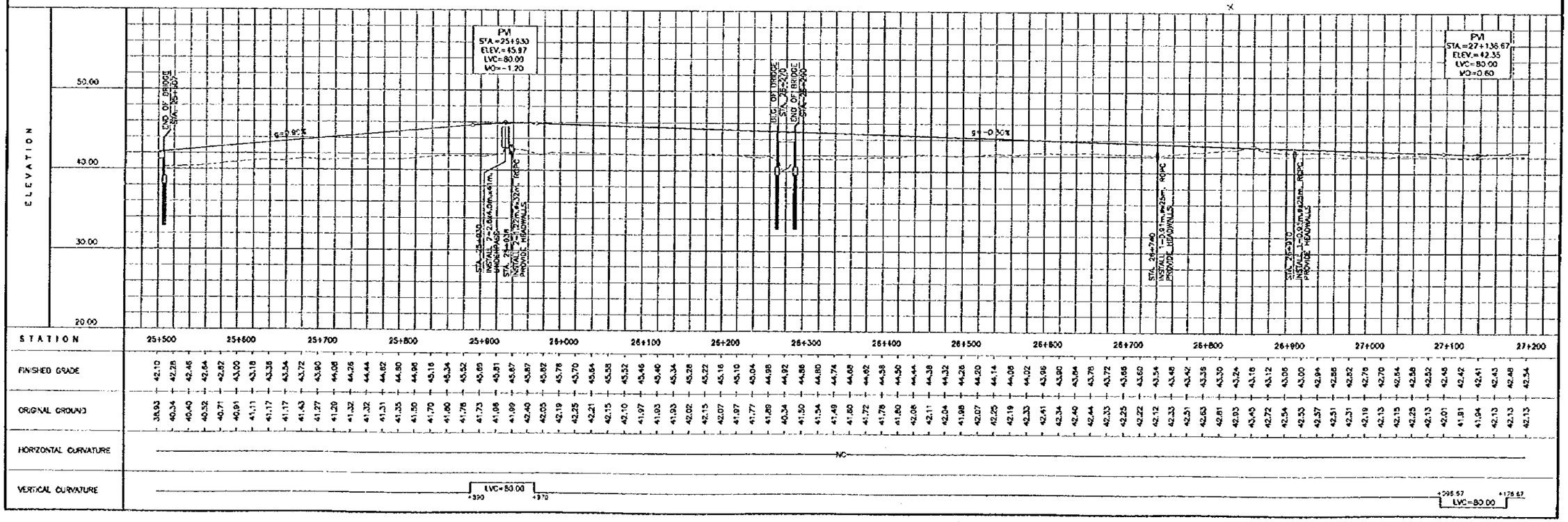

THE FEASIBILITY STUDY ON INTER-URBAN HIGHWAY SYSTEM ALONG THE PAN-PHILIPPINE HIGHWAY (STA. RITA, PLARIDEL-SAN JOSE SECTION)

SCALE :	CABANATUAN BYPASS ROUTE	DRAWING NO.
HOR. 1:2500 VER. 1:250	**PLAN AND PROFILE** STA. 27+200 – STA. 28+900	43/68

ELEMENTS OF CURVE								
P.I. NO.	STATION	COORDINATES OF P.I.		I	R	T	Lc	Es
		NORTHING	EASTING					
PI-7	28+458.12	1,726,453.23	492,313.94	31° 03' 37"	1,000.00	277.84	542.01	37.88

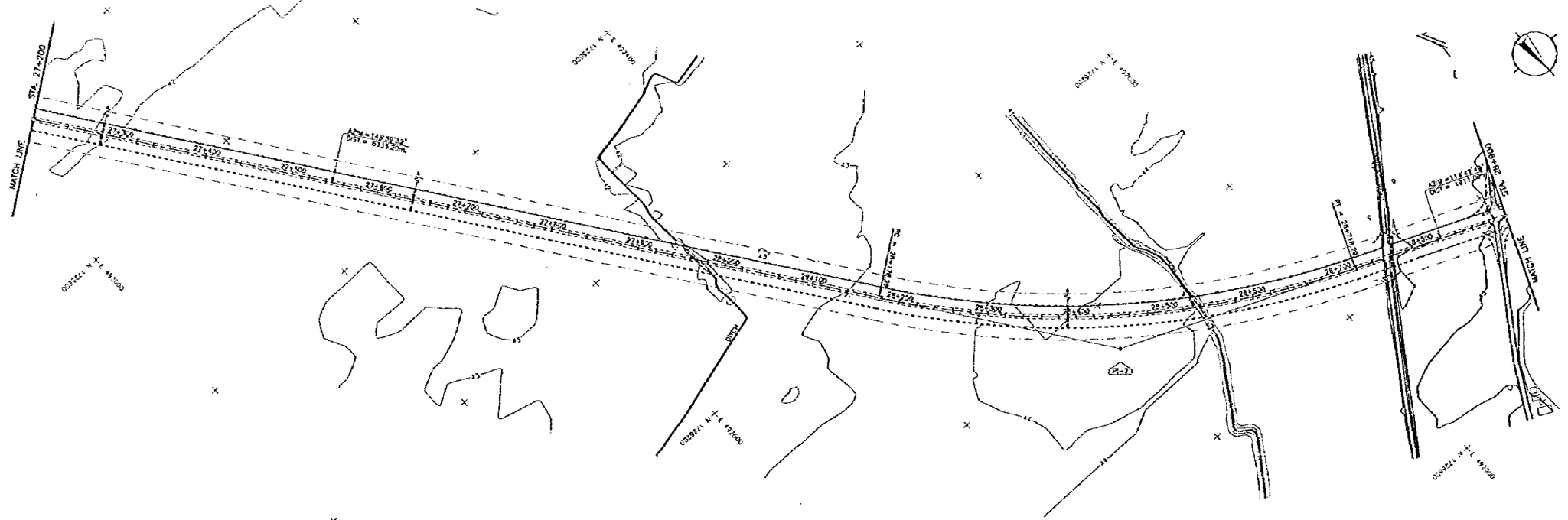

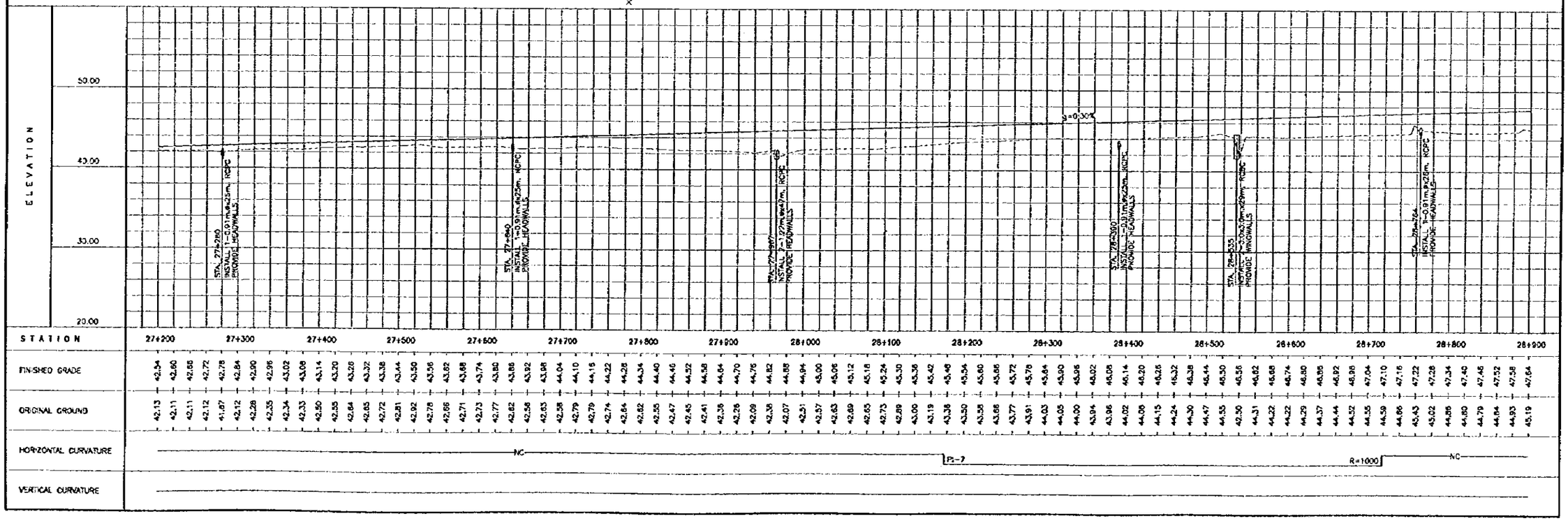

THE FEASIBILITY STUDY ON INTER-URBAN HIGHWAY SYSTEM ALONG THE PAN-PHILIPPINE HIGHWAY (STA. RITA, PLARIDEL-SAN JOSE SECTION)

SCALE :	CABANATUAN BYPASS ROUTE	DRAWING NO.
HOR. 1:2500 VER. 1:250	**PLAN AND PROFILE** STA. 28+900 – STA. 30+351.53	44/68

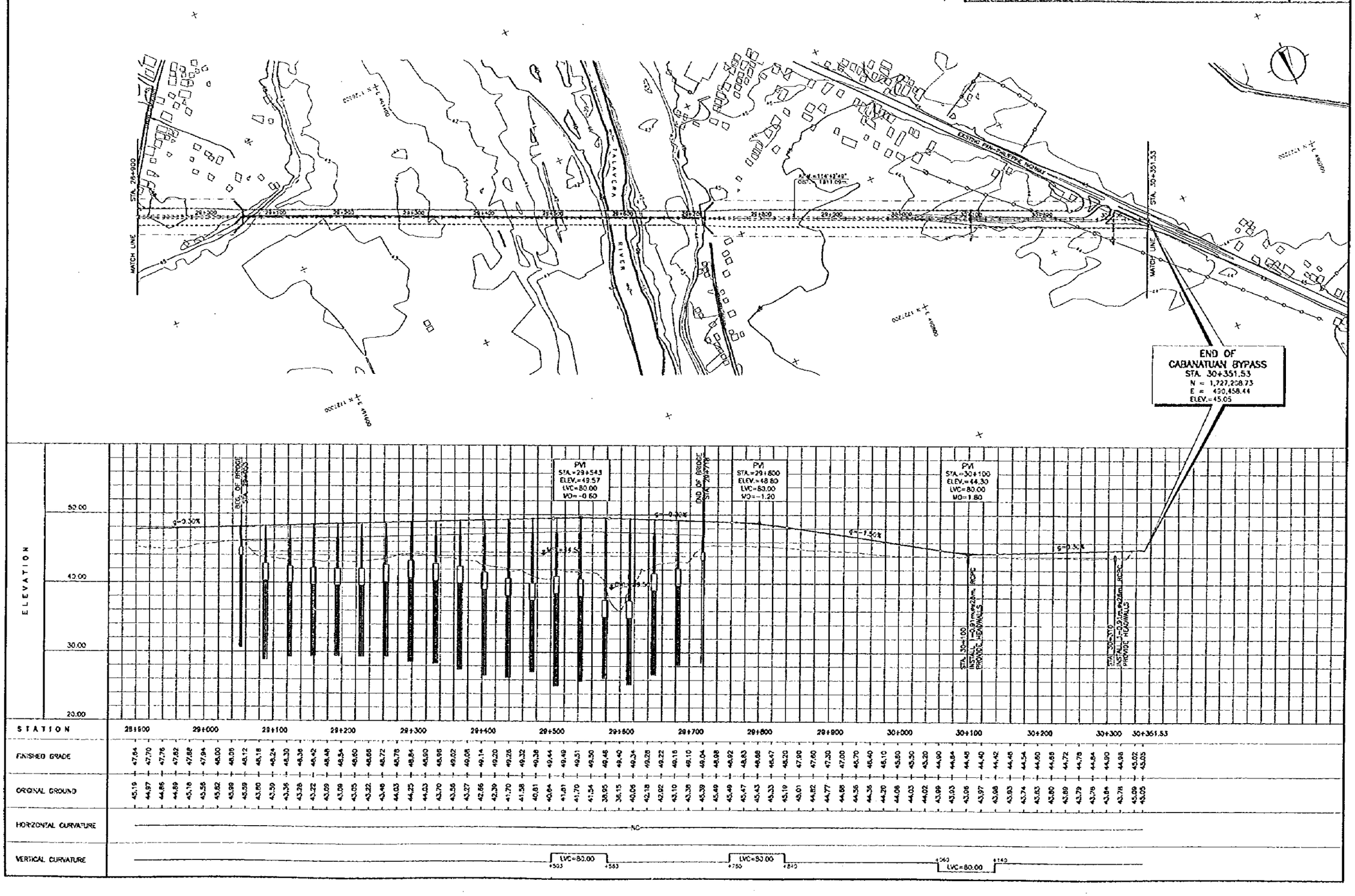

THE FEASIBILITY STUDY ON INTER-URBAN HIGHWAY SYSTEM ALONG THE PAN-PHILIPPINE HIGHWAY (STA. RITA, PLARIDEL-SAN JOSE SECTION)		
SCALE : 1:1,000	CABANATUAN BYPASS TYPICAL INTERSECTION (TYPE 1)	DRAWING NO. 45/68

CABANATUAN BYPASS

TYPICAL INTERSECTION (TYPE-1)

SCALE 1:1,000

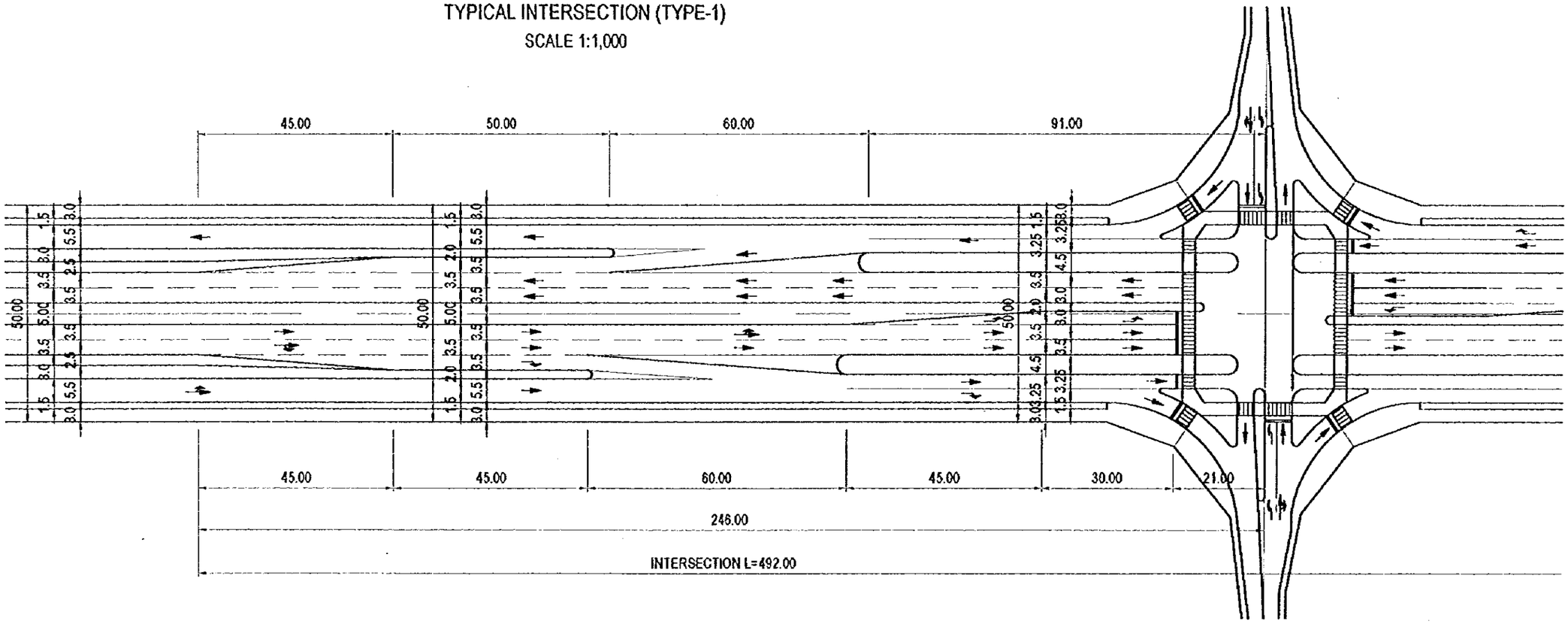

THE FEASIBILITY STUDY ON INTER-URBAN HIGHWAY SYSTEM ALONG THE PAN-PHILIPPINE HIGHWAY (STA. RITA, PLARIDEL-SAN JOSE SECTION)

SCALE :	CABANATUAN BYPASS	DRAWING NO.
1:1,000	TYPICAL INTERSECTION (TYPE 2) AND STAGE CONSTRUCTION	46/68

CABANATUAN BYPASS
TYPICAL INTERSECTION (TYPE-2)
SCALE 1:1,000

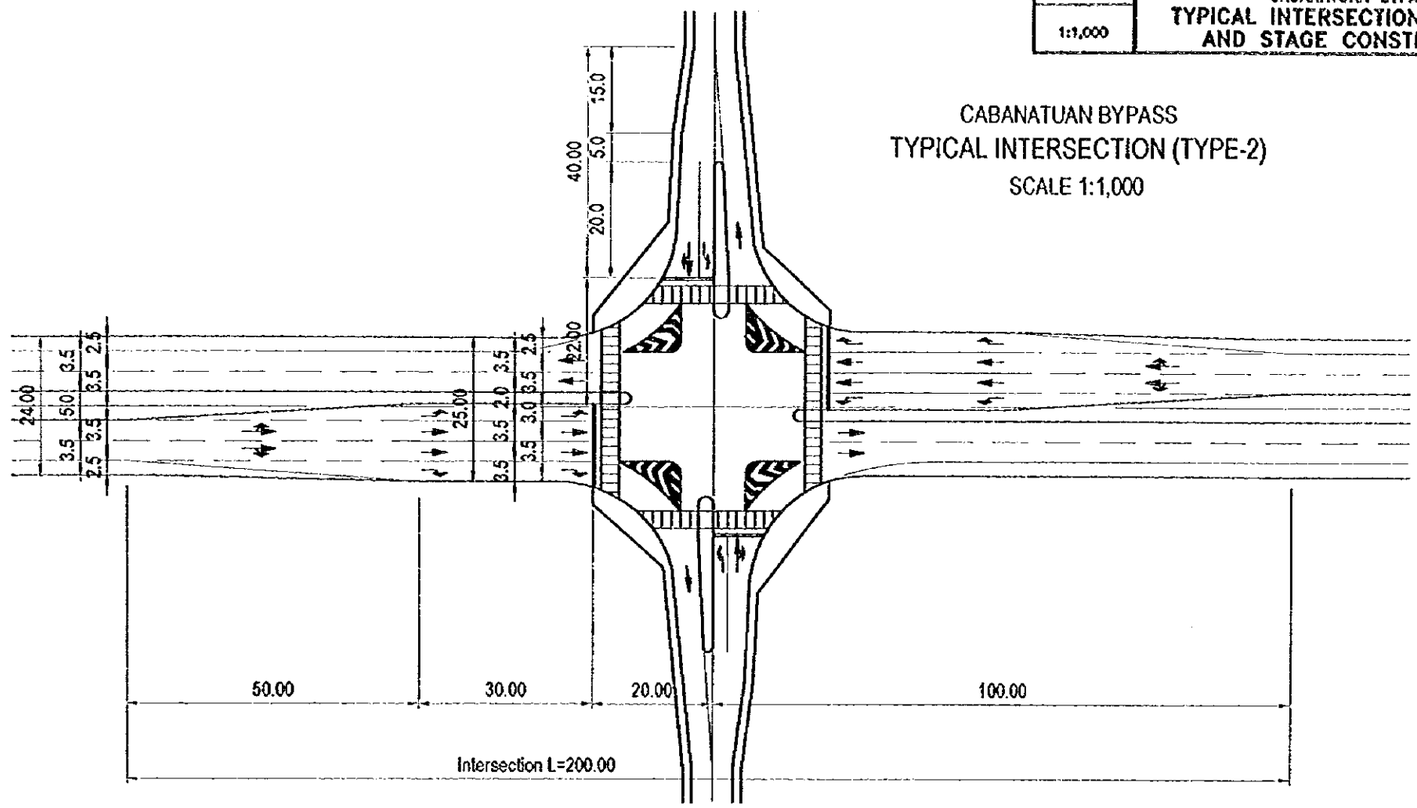

CABANATUAN BYPASS
TYPICAL INTERSECTION (STAGE CONSTRUCTION)
SCALE 1:1,000

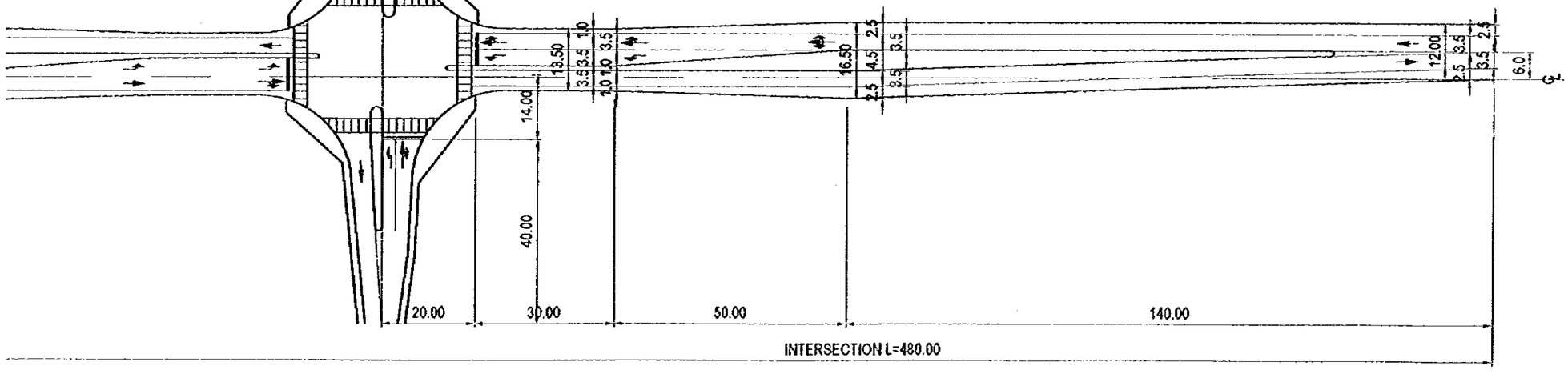

THE FEASIBILITY STUDY ON INTER-URBAN HIGHWAY SYSTEM ALONG THE PAN-PHILIPPINE HIGHWAY (STA. RITA, PLARIDEL-SAN JOSE SECTION)

SCALE :	CABANATUAN BYPASS BEGINNING POINT OF INTERSECTION	DRAWING NO.
1:1,000		47/68

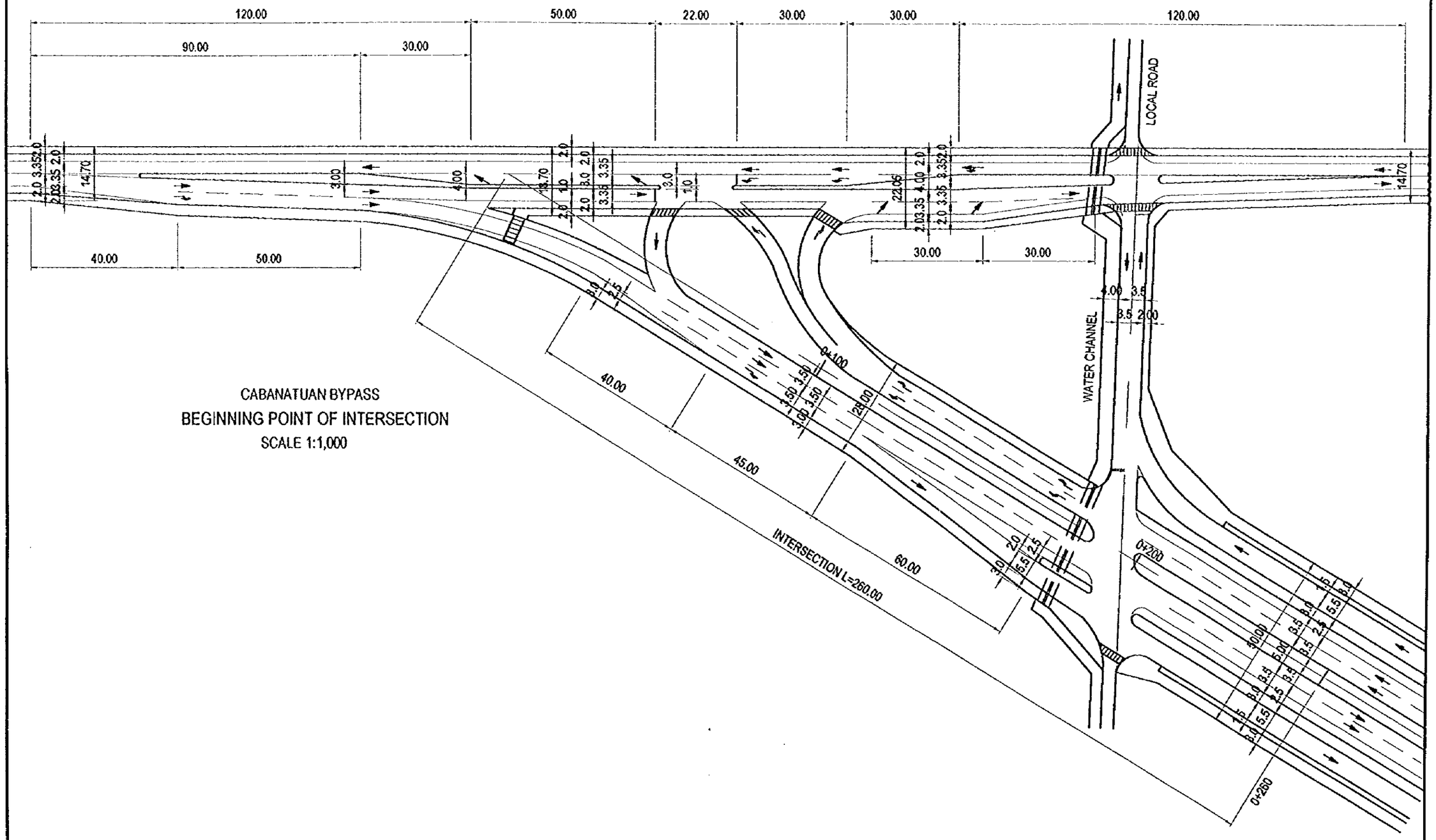

CABANATUAN BYPASS
BEGINNING POINT OF INTERSECTION
SCALE 1:1,000

THE FEASIBILITY STUDY ON INTER-URBAN HIGHWAY SYSTEM ALONG THE PAN-PHILIPPINE HIGHWAY (STA. RITA, PLARIDEL-SAN JOSE SECTION)

SCALE :	CABANATUAN BYPASS	DRAWING NO.
1:1,000	BEGINNING POINT OF INTERSECTION (STAGE CONSTRUCTION)	48/68

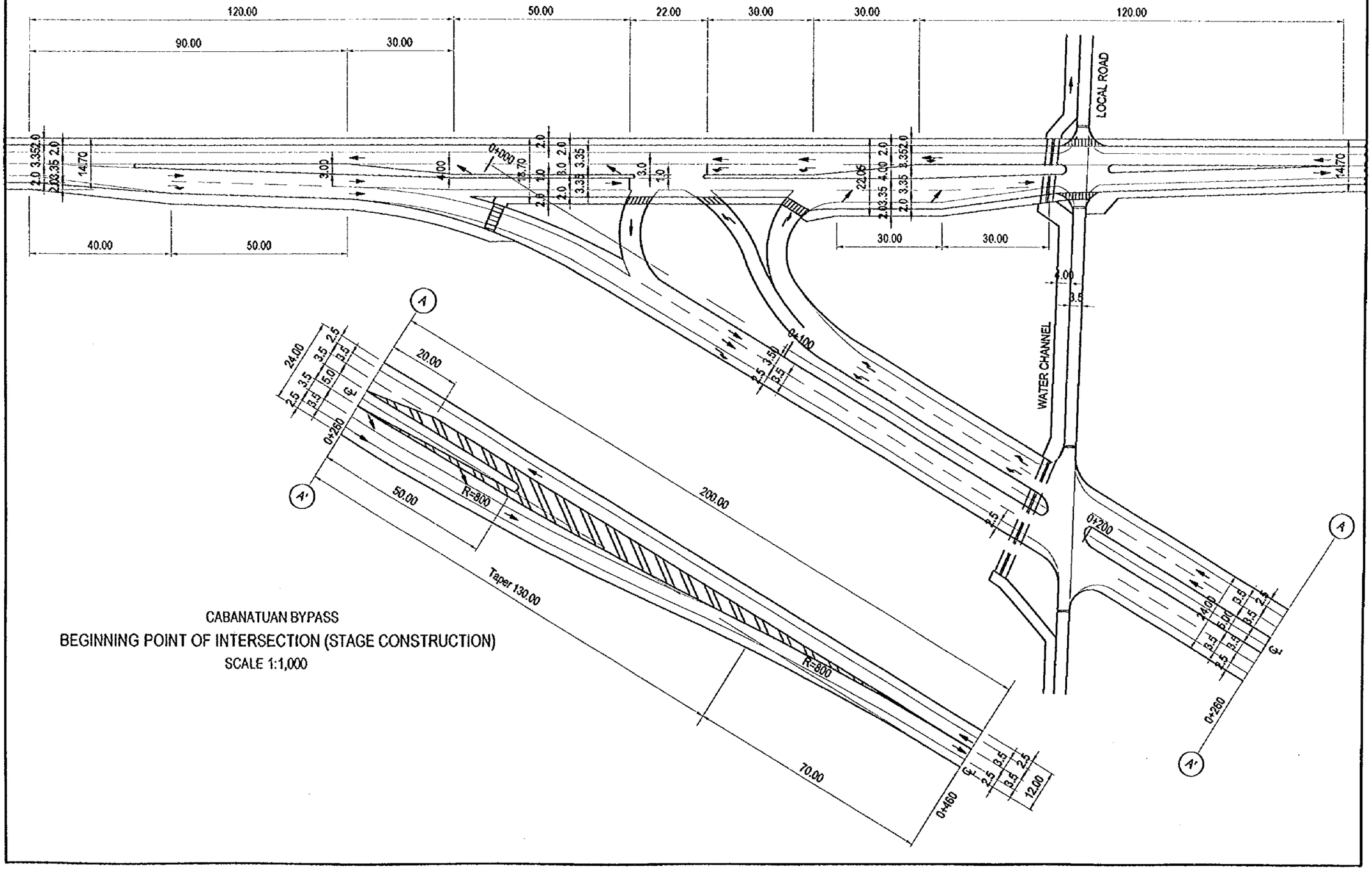

CABANATUAN BYPASS

BEGINNING POINT OF INTERSECTION (STAGE CONSTRUCTION)

SCALE 1:1,000

THE FEASIBILITY STUDY ON INTER-URBAN HIGHWAY SYSTEM ALONG THE PAN-PHILIPPINE HIGHWAY (STA. RITA, PLARIDEL-SAN JOSE SECTION)

SCALE :		DRAWING NO.
1:1,000	END POINT OF CABANATUAN BYPASS	49/68

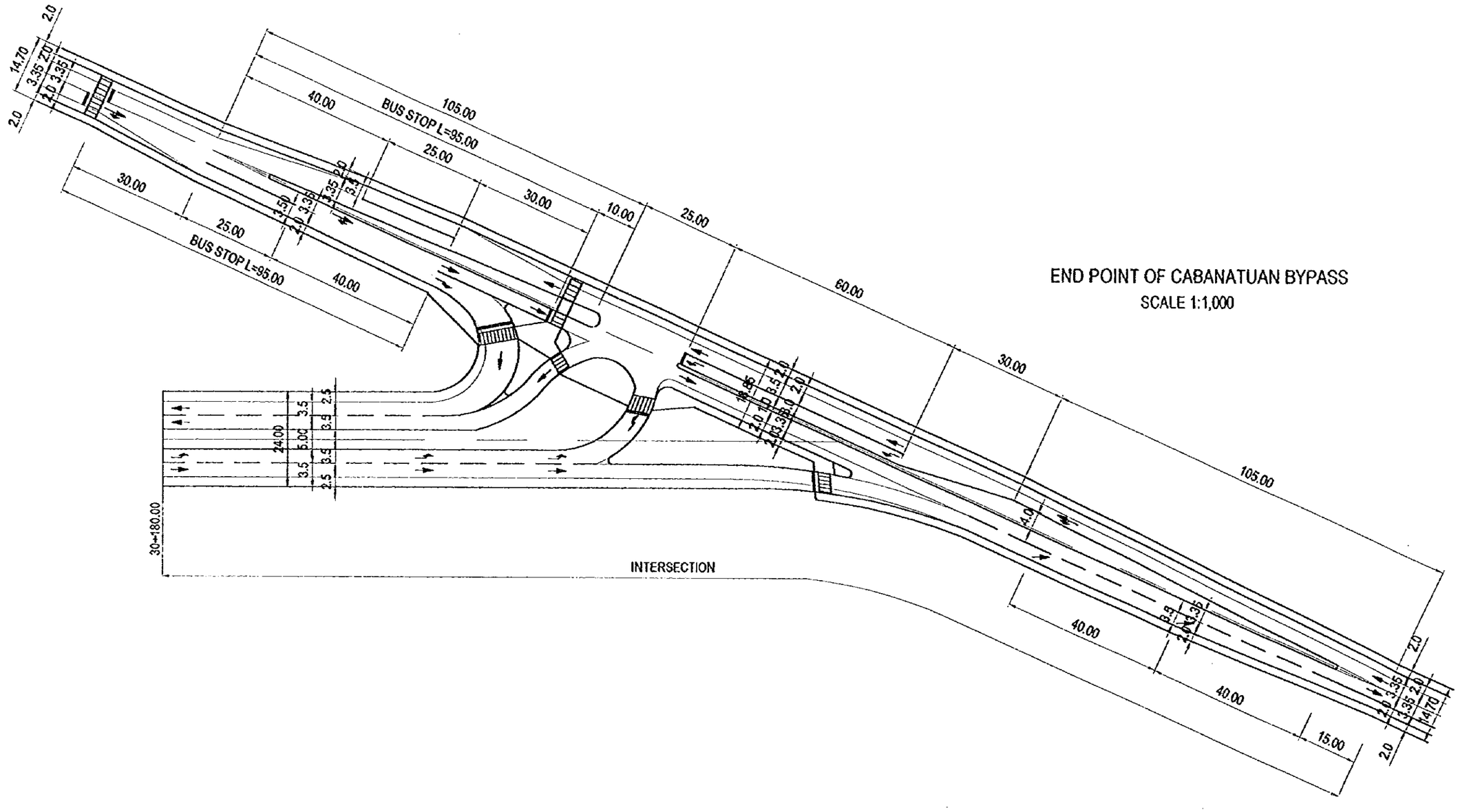

END POINT OF CABANATUAN BYPASS

SCALE 1:1,000

THE FEASIBILITY STUDY ON INTER-URBAN HIGHWAY SYSTEM ALONG THE PAN-PHILIPPINE HIGHWAY (STA. RITA, PLARIDEL-SAN JOSE SECTION)

SCALE :		DRAWING NO.
1:1,000	END POINT OF CABANATUAN BYPASS (STAGE CONSTRUCTION)	50/68

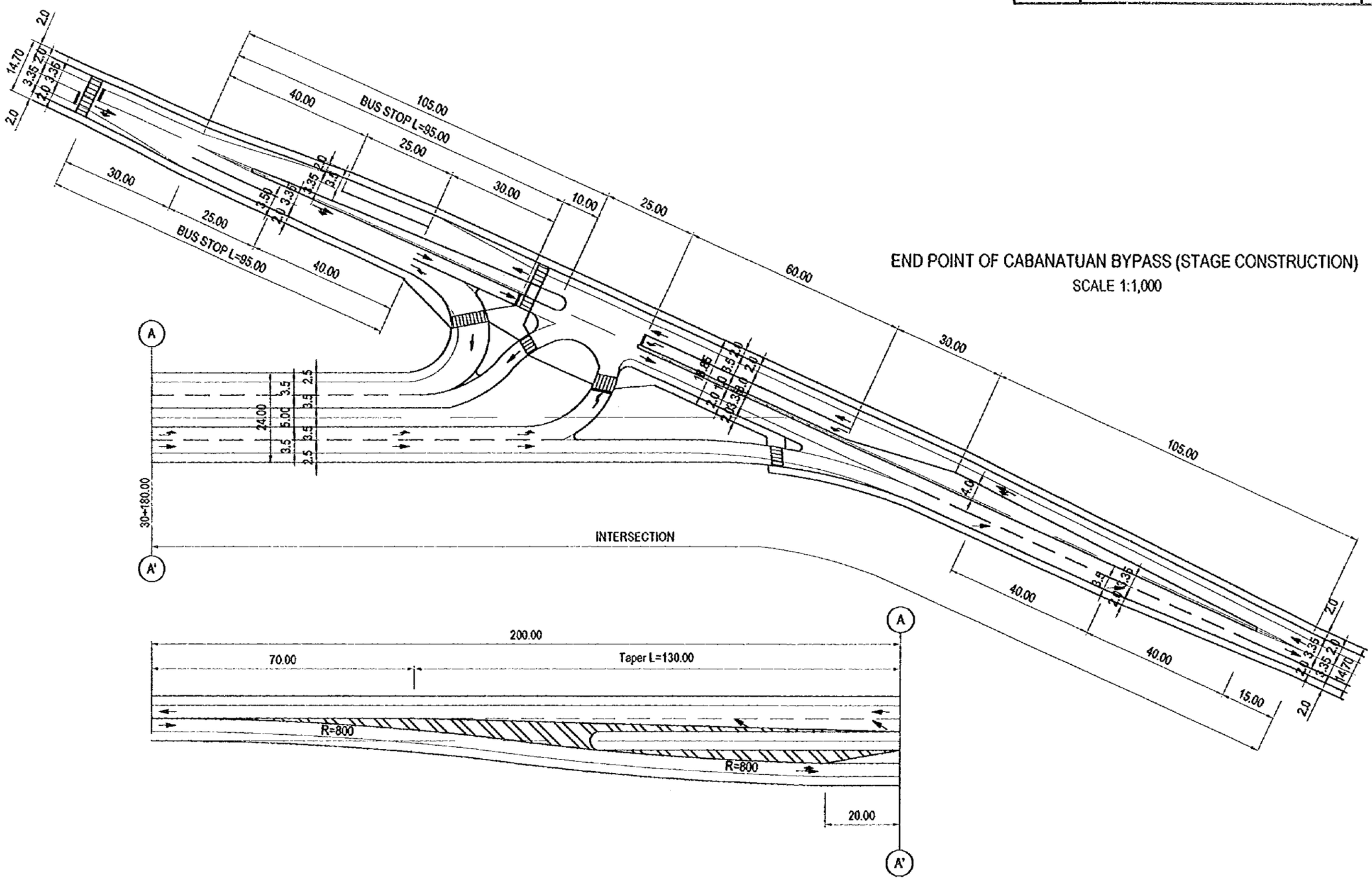

END POINT OF CABANATUAN BYPASS (STAGE CONSTRUCTION)

SCALE 1:1,000

A FEASIBILITY STUDY
SYS

SCALE	
Ver 1:1000	STRUCTURAL GE
Hor 1:2500	

PROFILE

Vertical Scale 1:1000
Horizontal Scale 1:2500

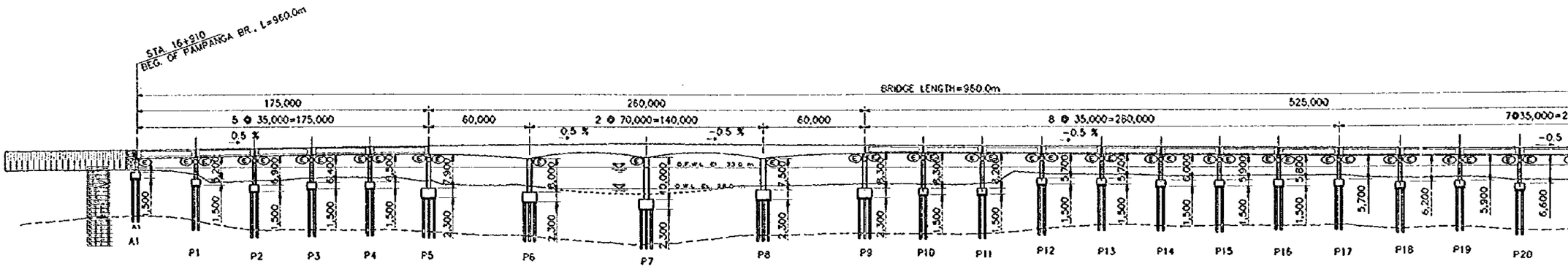

PLAN

Scale 1:2500

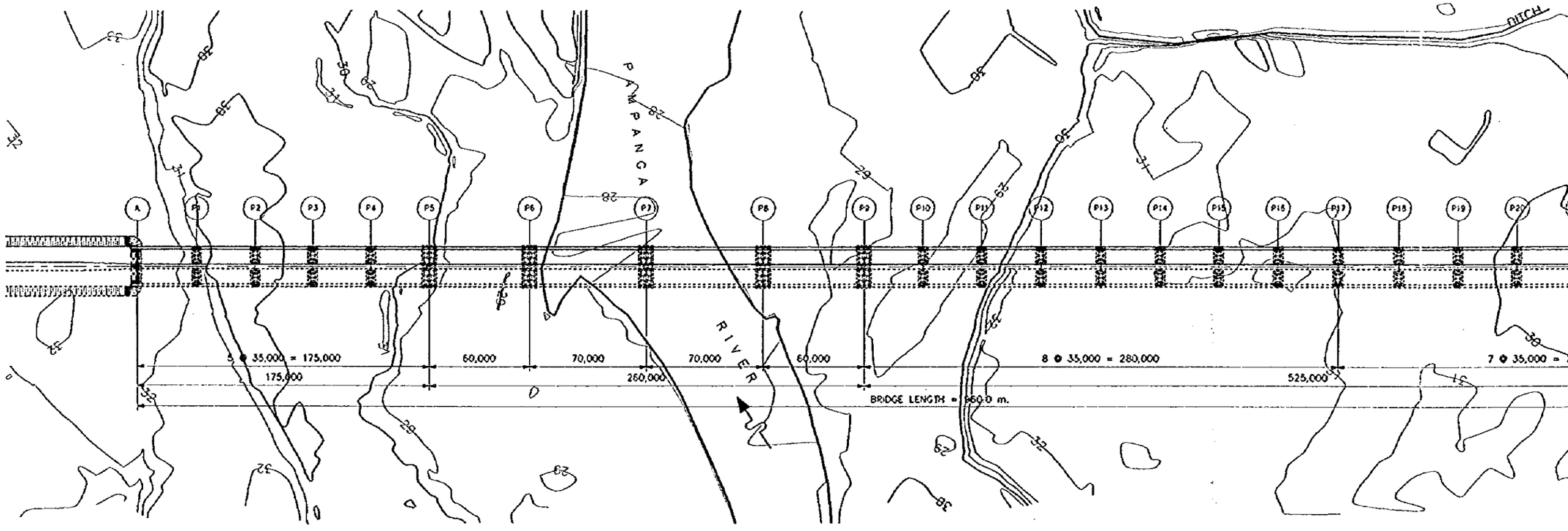

A FEASIBILITY STUDY ON UPGRADING OF INTER-URBAN HIGHWAY SYSTEM ALONG THE PAN-PHILIPPINE HIGHWAY

SCALE		DRAWING NO.
Ver 1:1000 Hor 1:2500	STRUCTURAL GENERAL VIEW OF PAMPANGA BR. (1/2) (CABANATUAN BYPASS)	51/68

PROFILE

Vertical Scale 1:1000
Horizontal Scale 1:2500

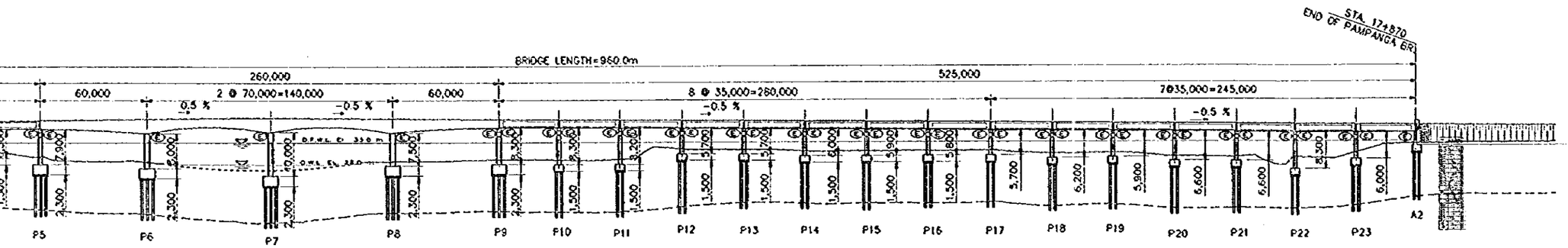

PLAN

Scale 1:2500

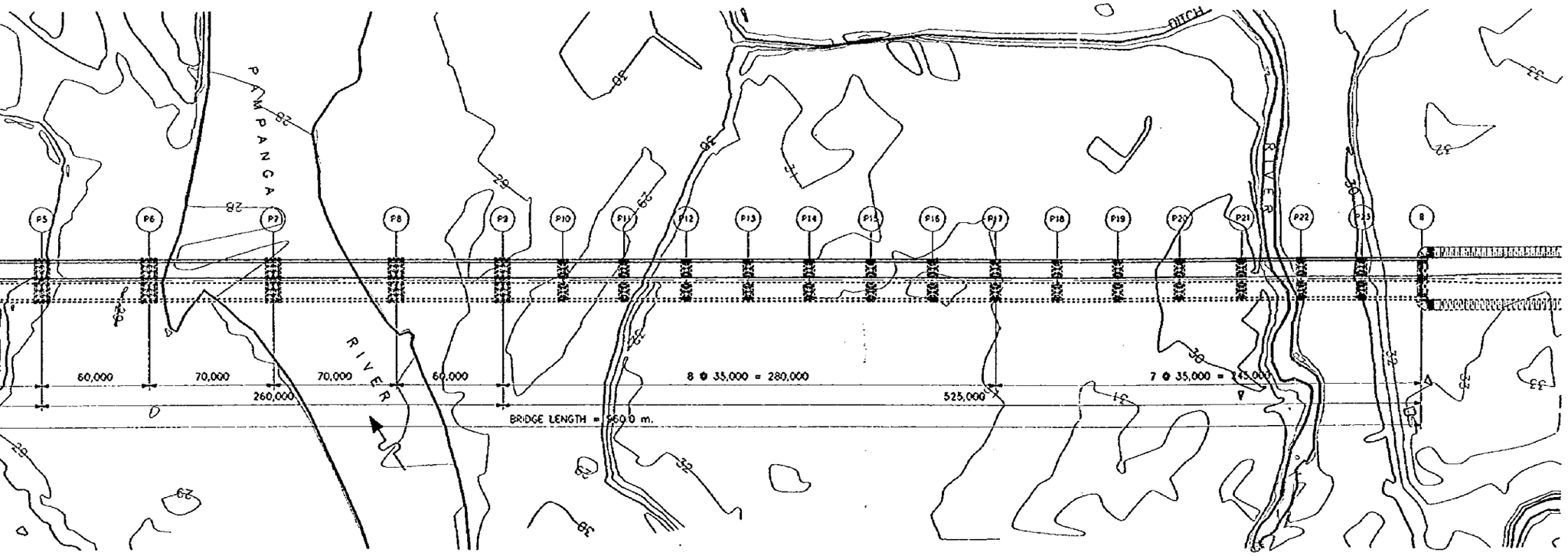

A FEASIBILITY STUDY ON UPGRADING OF INTER-URBAN HIGHWAY SYSTEM ALONG THE PAN-PHILIPPINE HIGHWAY

SCALE		DRAWING NO.
1:400 1:40	STRUCTURAL GENERAL VIEW OF PAMPANGA BR. (2/2) (CABANATUAN BYPASS)	52/68

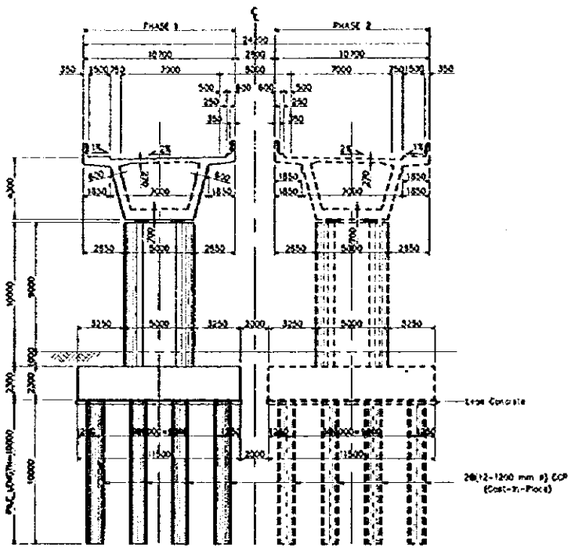

TYPICAL BOX GIRDER SECTION @ SUPPORT
SCALE 1:400

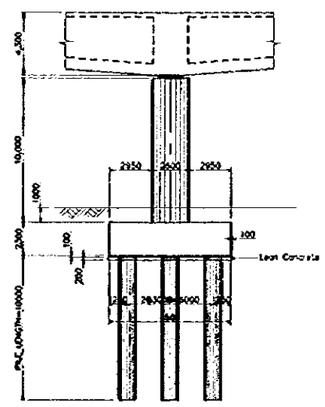

SIDE VIEW
SCALE 1:400

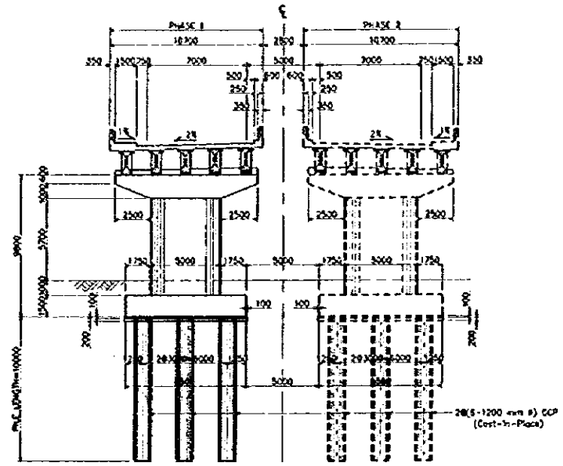

TYPICAL CROSS SECTION OF APPROACH BRIDGE
Scale 1:400

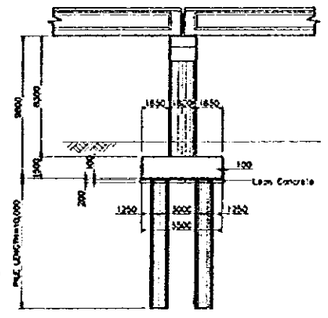

SIDE VIEW
Scale 1:400

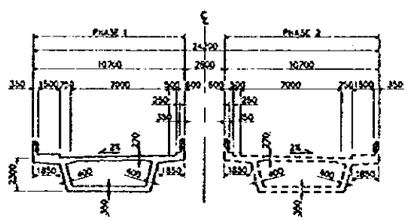

TYPICAL BOX GIRDER SECTION @ CENTER SPAN
SCALE 1:400

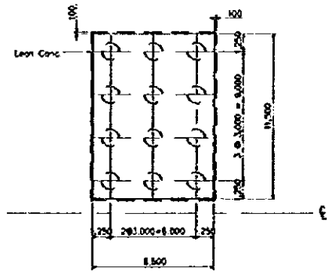

FOUNDATION PLAN
SCALE 1:400

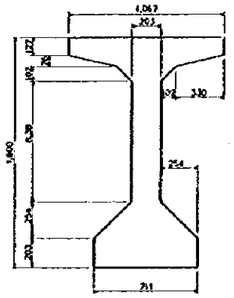

AASHTO-TYPE V GIRDER
Scale 1:40

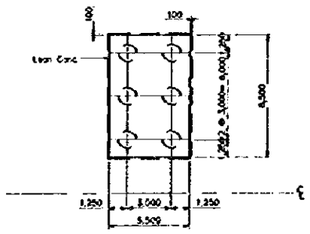

PILE FOUNDATION PLAN
Scale 1:400

A FEASIBILITY STUDY ON UPGRADING OF INTER-URBAN HIGHWAY SYSTEM ALONG THE PAN-PHILIPPINE HIGHWAY

SCALE		DRAWING NO.
Ver 1:1000 Hor 1:2500	STRUCTURAL GENERAL VIEW OF TALAVERA BR. (1/2) CABANATUAN BYPASS	53/68

PROFILE

Vertical Scale 1: 1000
Horizontal Scale 1:2500

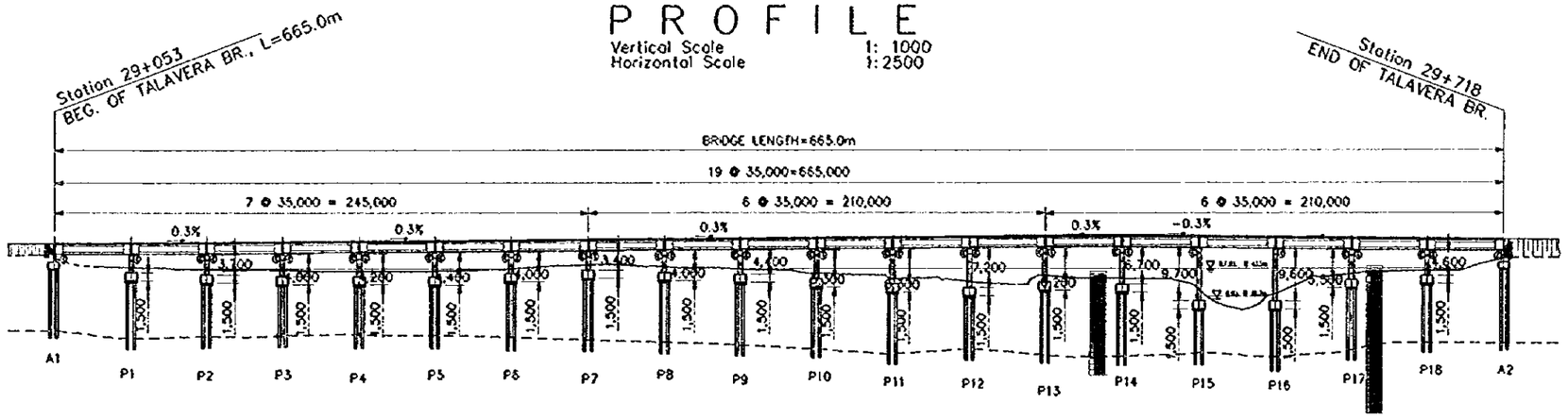

PLAN

Scale 1:2500

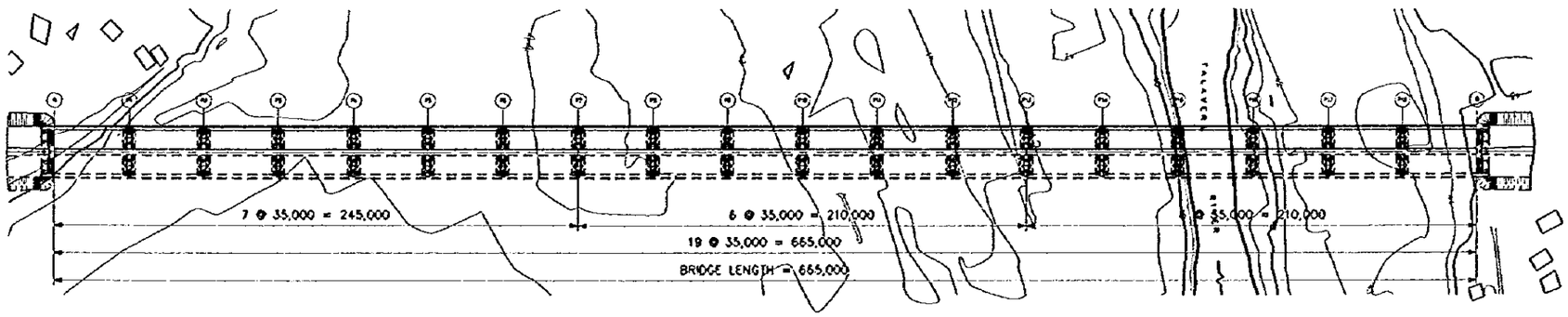

A FEASIBILITY STUDY ON UPGRADING OF INTER-URBAN HIGHWAY SYSTEM ALONG THE PAN-PHILIPPINE HIGHWAY

SCALE		DRAWING NO.
1:400 1:40	STRUCTURAL GENERAL VIEW OF TALAVERA BR. (2/2) (CABANATUAN BYPASS)	54/68

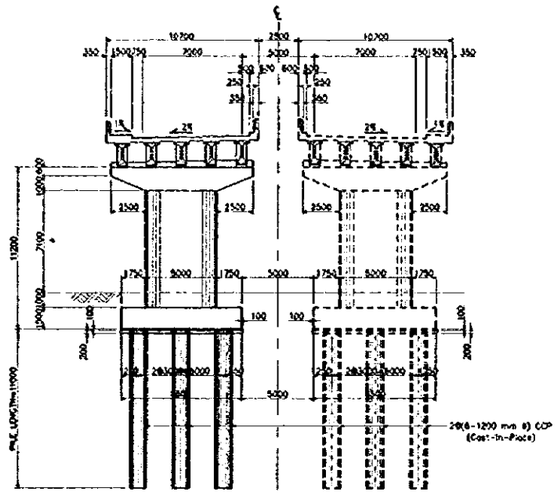

TYPICAL I-GIRDER SECTION @ SUPPORT
Scale 1:400

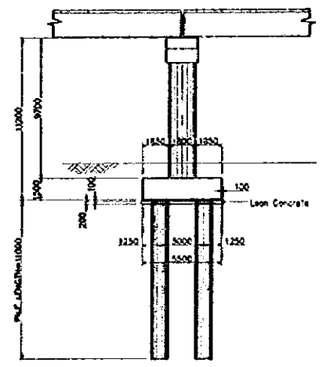

SIDE VIEW
Scale 1:400

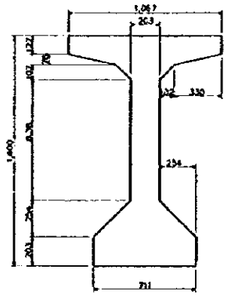

AASHTO-TYPE V GIRDER
Scale 1:40

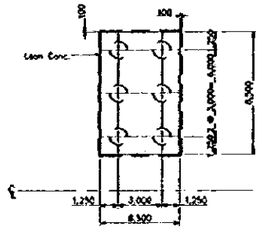

PILE FOUNDATION PLAN
Scale 1:400

A FEASIBILITY STUDY ON UPGRADING OF INTER-URBAN HIGHWAY SYSTEM ALONG THE PAN-PHILIPPINE HIGHWAY		
SCALE	TYPICAL CROSS SECTION OF BRIDGES IN CABANATUAN BYPASS 1) MAIN ROAD ONLY (WITHOUT FRONTAGE ROAD)	DRAWING NO.
1:200		55/68

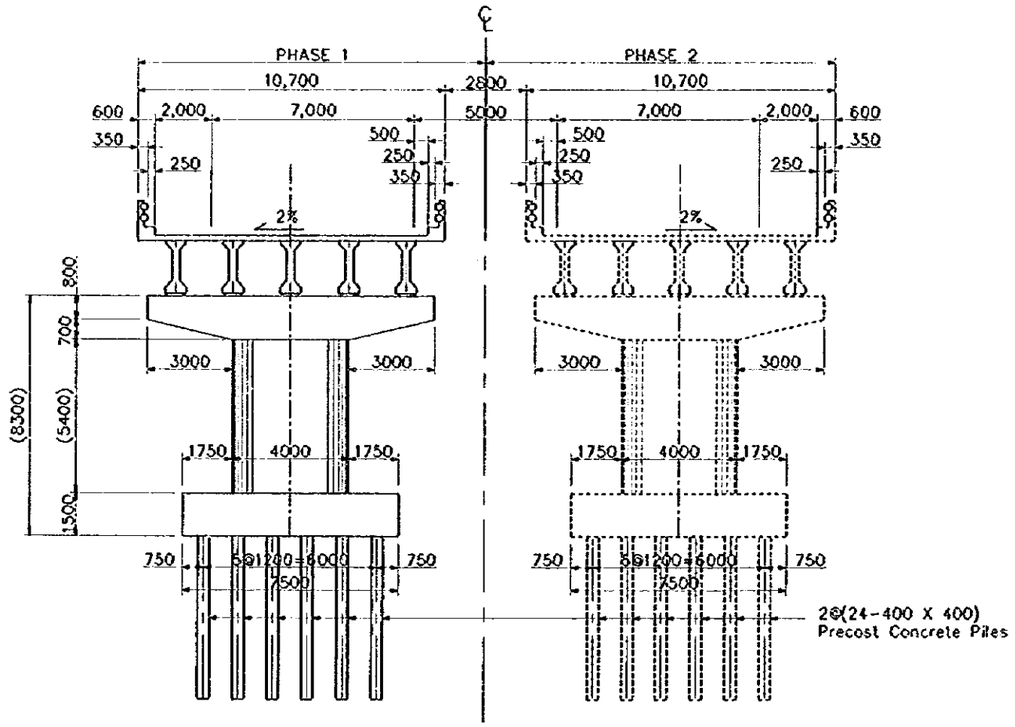

CROSS SECTION @ SUPPORT
SCALE 1:200

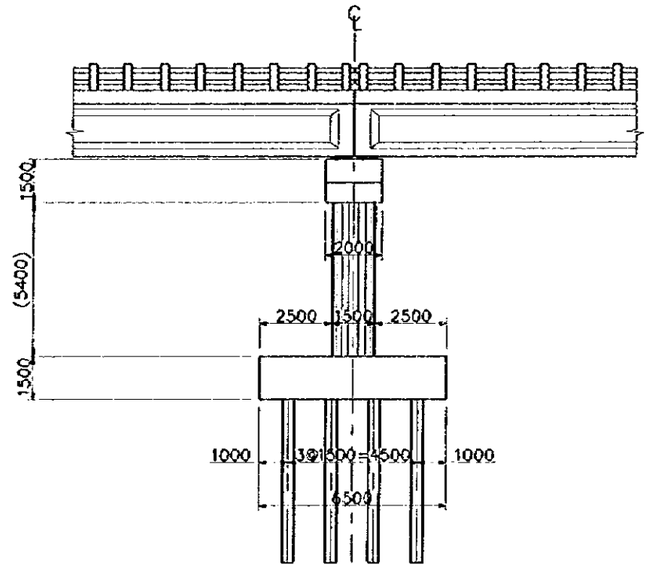

SIDE VIEW
SCALE 1:200

A FEASIBILITY STUDY ON UPGRADING OF INTER-URBAN HIGHWAY SYSTEM ALONG THE PAN-PHILIPPINE HIGHWAY

SCALE	TYPICAL CROSS SECTION OF BRIDGES IN CABANATUAN BYPASS 2) MAIN ROAD AND FRONTAGE ROAD	DRAWING NO.
1:200		56/68

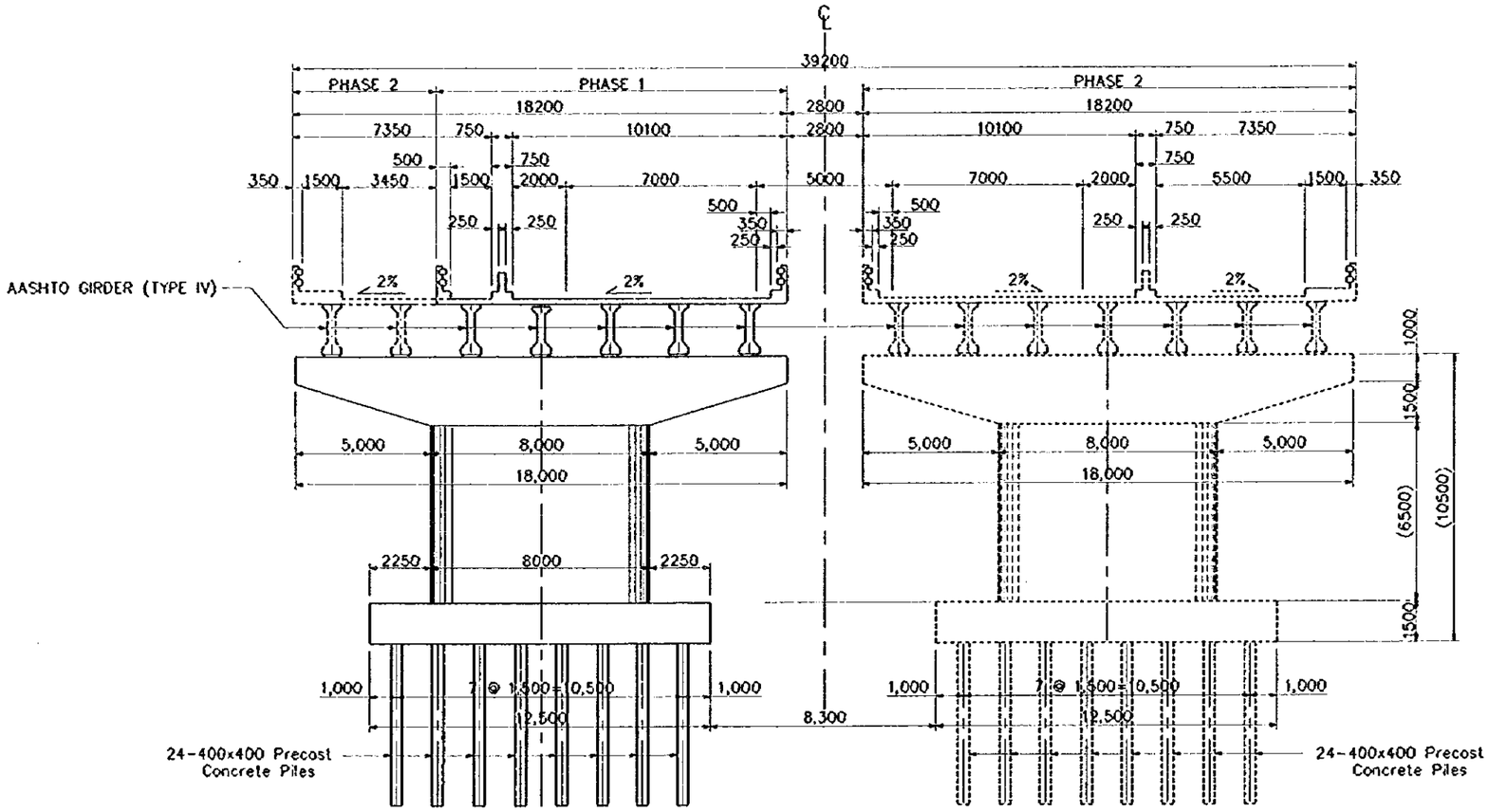

CROSS SECTION @ SUPPORT

SCALE 1:200

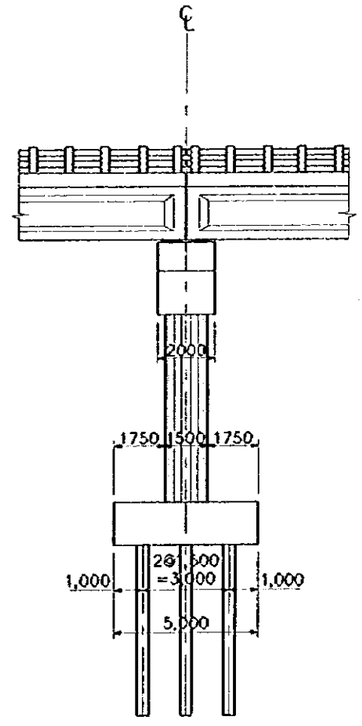

SIDE VIEW

SCALE 1:200