4. SOCIO-ECONOMIC DATABASE

4.1 DATA STRUCTURE

Socio-economic data primarily used for traffic analysis is stored in **SOCIO-ECO** directory and same files are also found in **TRAF-ANA** directory.

Contents of data files stored in **SOCIO-ECO** directory and **TRAF-ANA** directory must be exactly same to maintain consistent traffic analysis results. It shall be reminded that whenever users update data in **SOCIO-ECO** directory they also have to update data in **TRAF-ANA** directory and vice-versa.

The following two files are available in **SOCIO-ECO** directory:

POPULAT.DAT : population projection data for the year of 1995, 1997, 2000, 2004, 2010, 2016 and 2020. Population projection data contains urban population and total population of each municipality in the study area. Municipalities outside study area has "EX" or "OT" mark in front of municipality name.

GRDP-ALL.DAT : present and future GRDP data for the year of 1995, 1997, 2000, 2004, 2010, 2016 and 2020 by 1st, 2nd, and 3rd sectors.

Sequence of regions, provinces and municipalities in the file is same as population data for easy comparison.

TABLE 4.1 POPULATION DATA BY MUNICIPALITIES

	1995 Total Urban	1997 Total Urban	2000 Total Urban	2004 Total Urban	2005 Total Urban	2010 Total Urban	2015 Total Urban	2016 Total Urban	2020 Total Urban
PH PHILIPPINES	68611332	71538597	76320141	82636723	84214778	91851291	99007597	100269915	105503166
	32125950	34190677	37635754	42451179	43717011	49958656	56218757	57383678	62353094
01 REGION1	3803890	3931261	4140531	4413599	4481820	4802027	5086178	5133705	5328297
	1279694	1381979	1555052	1798434	1863932	2190288	2520827	2582606	2845489
OT ILOCOS SUR	545385	566419	600962	646619	658148	714084	766752	776192	815101
	108893	115248	125786	140436	144265	163573	183210	186986	202878
OT ILOCOS NORTE	482651	498024	523281	556363	564597	603852	638608	644302	667567
	151863	160630	175164	195413	200704	227282	253819	258773	279567
OT LA UNION	597442	621073	659889	710740	723594	785052	841752	851573	891987
	142172	155670	178793	212641	221920	270573	323697	334266	380097
OT PANGASINAN	2178412	2245745	2356399	2499877	2535481	2699039	2839066	2861638	2953642
	876766	950431	1075309	1249944	1297043	1528860	1760101	1802581	1982947
04 REGION IV	9940722	10463047	11301272	12508472	12810064	14441165	16233025	16582194	18055608
	4631318	4990262	5582828	6440170	6663992	7861315	9197573	9461604	10596120
PR MARINDUQUE	199910	208154	221204	240089	244676	269460	296336	301544	323307
	33251	35595	39433	45184	46676	54872	64266	66204	74545
BOAC (Capital)	44609	46274	48898	52711	53626	58608	64019	65067	69436
	6928	7417	8216	9414	9726	11433	13391	13794	15532
BUENAVISTA	17358	18103	19284	20991	21407	23651	26083	26554	28526
	2522	2699	2990	3427	3539	4160	4873	5020	5652
GASAN	26944	28101	29935	32584	33231	36713	40488	41219	44279
	3043	3258	3609	4135	4272	5022	5882	6060	6824
MOGPOG	28201	29412	31333	34108	34784	38434	42387	43153	46359
	3390	3629	4021	4607	4758	5594	6552	6750	7600
SANTA CRUZ	56991	59313	62986	68304	69594	76565	84126	85592	91711
	14838	15884	17596	20162	20828	24486	28677	29542	33264
TORRIJOS	25807	26951	28768	31391	32034	35489	39233	39959	42996
	2530	2708	3001	3439	3553	4177	4891	5038	5673
PR OCCIDENTAL MINDORO	337231	353226	378861	416236	425518	475928	531639	542651	589092
	60871	64384	70053	78381	80486	91862	104495	106958	117413
ABRA DE ILOG	15253	16043	17308	19140	19596	22059	24766	25300	27552
	1739	1839	2001	2238	2298	2623	2984	3062	3389
CALINTAAN	21687	23126	25469	28870	29744	34423	39606	40631	45003
	5017	5307	5774	6460	6634	7572	8613	8836	9782
MAGSAYSAY	26947	28342	30578	33812	34619	38968	43752	44696	48675
	7866	8319	9051	10127	10400	11870	13502	13850	15336
MAMBURAO (Capital)	25627	26954	29080	32156	32924	37061	41611	42507	46292
	7966	8427	9169	10259	10535	12023	13676	14029	15534
PALUAN	8860	9318	10053	11117	11383	12813	14385	14696	16003
	4036	4268	4644	5197	5335	6090	6927	7106	7868

TABLE 4.2 GRDP DATA BY MUNICIPALITIES AND SECTORS

01 REGION1	24248	25782	28313	31932	32869	37781	42748	43697	48125
01 REGION1	9139	10725	13858	19347	20562	27498	33798	35107	41293
01 REGION1	24865	27938	33093	41231	43133	53796	64294	66428	76464
OT ILOCOS SUR	4193	4563	5204	6181	6452	7964	9724	10092	11867
OT ILOCOS SUR	1140	1331	1705	2354	2494	3296	4014	4165	4874
OT ILOCOS SUR	3003	3350	3922	4816	5018	6159	7269	7497	8565
OT ILOCOS NORTE	3178	3412	3812	4407	4569	5447	6412	6604	7521
OT ILOCOS NORTE	1136	1322	1686	2317	2452	3222	3899	4039	4696
OT ILOCOS NORTE	3076	3423	3994	4886	5087	6218	7301	7519	8543
OT LA UNION	4373	4707	5268	6082	6299	7442	8633	8861	9922
OT LA UNION	1301	1534	1997	2815	2999	4067	5080	5295	6315
OT LA UNION	3462	3909	4665	5873	6161	7802	9489	9841	11503
OT PANGASINAN	12504	13100	14029	15262	15549	16928	17979	18140	18815
OT PANGASINAN	5563	6539	8471	11862	12617	16913	20805	21608	25408
OT PANGASINAN	15324	17256	20511	25656	26867	33617	40235	41571	47852
04 REGION IV	75413	79320	85706	94593	96845	108346	119319	121311	130745
04 REGION IV	103629	121615	157144	219380	233161	311810	383238	398085	468232
04 REGION IV	95437	107232	127016	158253	165553	206481	246774	254966	293485
PR MARINDUQUE	2367	2501	2724	3038	3120	3533	3936	4009	4360
PR MARINDUQUE	1555	1798	2272	3092	3265	4243	5086	5261	6088
PR MARINDUQUE	1342	1486	1720	2089	2171	2632	3069	3159	3580
BOAC (Capital)	535	563	610	675	692	777	859	873	945
BOAC (Capital)	343	395	496	672	708	914	1090	1126	1298
BOAC (Capital)	295	325	375	453	470	566	656	675	762
BUENAVISTA	211	223	244	274	282	321	360	367	401
BUENAVISTA	132	153	193	263	278	361	433	448	519
BUENAVISTA	113	125	145	176	183	222	259	267	302
GASAN	339	360	395	443	456	522	587	599	656
GASAN	197	228	288	391	413	536	641	663	766
GASAN	167	185	214	259	269	326	379	390	441
MOGPOG	352	374	409	460	473	541	608	620	679
MOGPOG	208	240	304	413	436	567	679	702	811
MOGPOG	177	196	226	275	286	346	402	414	468
SANTA CRUZ	599	629	680	750	768	857	940	955	1024
SANTA CRUZ	491	568	720	984	1040	1358	1636	1694	1968
SANTA CRUZ	434	482	560	683	710	866	1016	1047	1192
TORRIJOS	331	351	386	436	449	516	582	595	654
TORRIJOS	185	214	271	369	390	507	607	627	725
TORRIJOS	156	173	200	243	253	306	356	366	414
PR OCCIDENTAL MINDORO	3925	4186	4628	5267	5437	6324	7244	7423	8267
PR OCCIDENTAL MINDORO	2665	3090	3920	5361	5668	7408	8925	9241	10727
PR OCCIDENTAL MINDORO	2311	2562	2974	3622	3767	4581	5357	5515	6255
ABRA DE ILOG	192	206	229	263	273	320	369	379	423
ABRA DE ILOG	112	130	165	227	240	315	381	395	460
ABRA DE ILOG	95	105	123	150	156	191	223	230	262
CALINTAAN	237	258	295	349	364	442	526	542	617
CALINTAAN	181	213	276	386	411	552	680	707	836
CALINTAAN	159	179	212	264	276	344	411	424	490
MAGSAYSAY	271	290	323	369	382	446	513	526	584
MAGSAYSAY	239	279	355	489	518	681	825	855	999
MAGSAYSAY	214	238	277	340	354	433	509	525	599

5 PROJECT DATABASE

5.1 DATA STRUCTURE

The **PROJECT** directory contains information of the projects identified by the study.

Figure 5-1 shows directory three of PROJECT directory

Subdirectory **PROFILE** contains project profile sheets of identified projects which present all necessary project information such as type and extent of civil works, construction cost, project cost, economic evaluation results, and implementation schedule as well as description of project objectives and comments on environmental consideration.

SCHEDULE directory keeps implementation schedule table with Excel format while **LIST** directory stores other project information like breakdown of project cost benefit and prioritization rating table.

5.2 PROJECT PROFILE DATA (PROFILE)

Project profile sheets are consolidated into one Excel Workbook for each island. hence, there should be 15 Excel Workbook files in this directory since there are 15 islands in the study area. Basically each sheet contains project information of one road project. One sheet can accommodate maximum seven road segments. Therefore, if one road project consist of more than seven segments, information beyond 7th segment are stored in second sheet and if the second sheet cannot accommodate remaining segments third sheet will store remainings and so on.

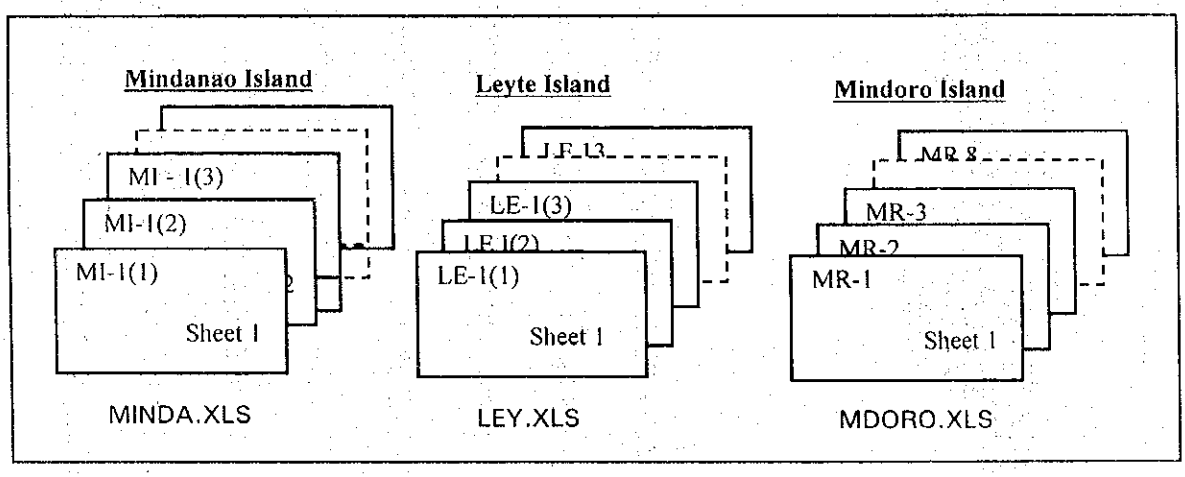

Figure 5-2 shows sample print out of a project sheet. Drawing objects are embeded in existing condition columns. A location map of the project road can be pasted at bottom of project sheet by retrieving map data from MAP directory.

The project profile sheets are not protected, hence, users can edit/update data in the sheets anytime they want.

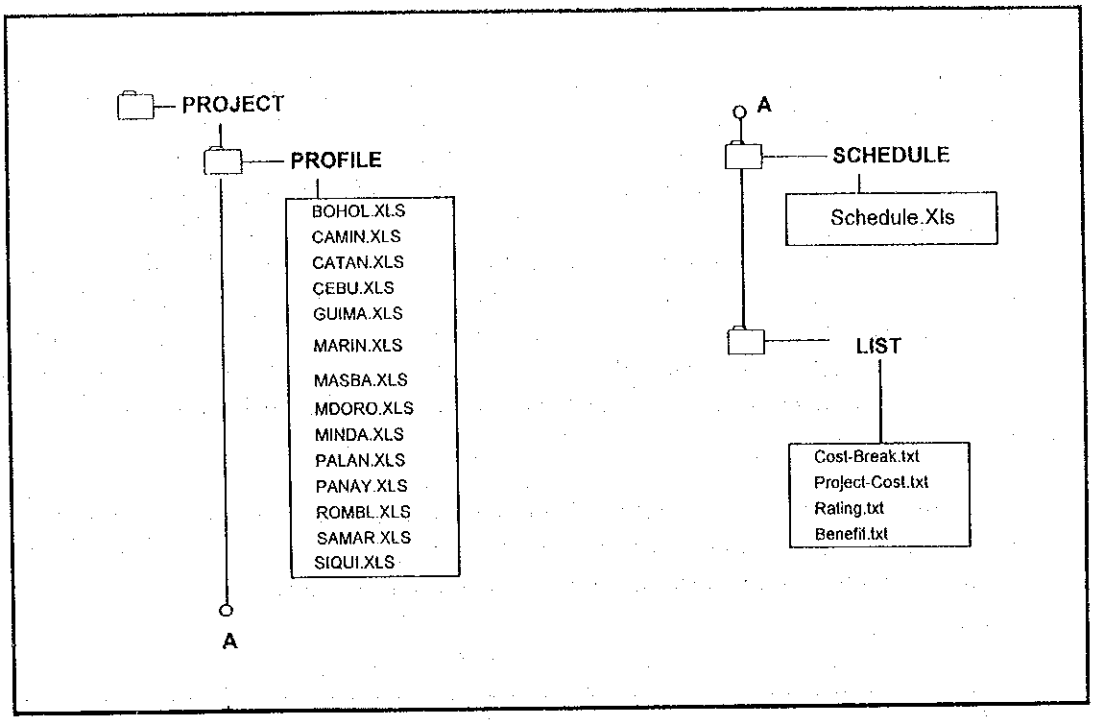

FIGURE 5-1 DATA STRUCTURE OF PROJECT DIRECTORY

PROJECT PROFILE — Project Number : MR 4(1) — Classification : Strategic Road (A)

Road Name	Mindoro West Coast Road - 1	Province: Occidental Mindoro

Existing Road Condition

MR 4-1	MR 4-2	MR 4-3	MR 4-4	MR 4-5
L=17.79km	L=24.21km	L=43.57km	L=16.99km	L=39.98km
F	F	F	F-B	F-B
Flat		Flat		Flat-Rolling-Mount

San Jose — Calintaan — Jct. Balud — Yapang — Sta. Cruz

: PCC G: Good
: AC F: Fair
: Gravel B: Bad
: Earth V. V. Bad
: Impassable/not existing
: Underconstruction

Objective:
- Strengthen North-South link along Mindoro west coast.
- Promote provincial/regional development (agriculture, rural industry and tourism)

Segment		MR 4-1		MR 4-2		MR 4-3		MR 4-4		MR 4-5	
Location	from	San Jose		Jct. San Pedro		Calintaan		Jct. Balud		Yapang	
	to	Jct. San Pedro		Calintaan		Jct. Balud		Yapang		Sta Cruz	
Length	(km)	17.79		24.21		43.57		16.99		39.98	
Traffic Volume	Year	1997	2016	1997	2016	1997	2016	1997	2016	1997	2016
	Car	200	1,024	169	943	138	908	74	541	74	507
	Jeepney	100	410	99	352	86	310	39	131	39	131
	Bus	30	107	35	109	36	118	30	93	30	83
	Truck	100	351	82	292	39	278	49	196	49	195
	Total	430	1,892	385	1,696	299	1,614	192	961	192	916
Work Item/Cost (MP)		Length	Cost	Length	Cost	Length	Cost	Length	Cost	Length	Cost
Rehabilitation (km)		-	-	2.41	17.52	0.33	2.41	-	-	-	-
Improvement (km)		17.79	1,595.30	21.81	295.17	43.23	683.27	16.99	34.98	-	-
New Construction (km)		-	-	-	-	-	-	-	-	-	-
Widening (km)		-	-	-	-	-	-	-	-	-	-
Bridge Construction (m)		-	-	150.00	52.50	1,057.10	351.87	-	-	-	-
Disaster Prevention (m)		-	-	80.00	1.83	105.00	2.10	-	-	-	-
Total			1,595.30		367.02		1,039.65		34.98		-
Project Cost: (MP)											
Right-of-Way			-		-		-				
Construction			1,595.30		367.02		1,039.64	Included		Included	
Engineering			250.40		51.38		145.55	in MR 4-1		in MR 4-1	
Total			1,845.70		418.40		1,185.19	-		-	
Implementation Schedule	from	July 2000		Jan. 2005		Jan. 2005		July 2000		July 2000	
	to	Dec. 2002		Dec. 2006		Dec. 2008		Dec. 2002		June 2004	
Economic Return (IRR %)		22.90		23.76		14.77		11.40		8.74	

Environmental Impact: (LOW) : The project is to improve existing gravel road. No significant environmental impact is expected.

FIGURE 5-2 SAMPLE PRINT OUT OF PROJECT PROFILE

5.3 IMPLEMENTATION SCHEDULE DATA (SCHEDULE)

Implementation schedule of each road project is stored in *schedule.Xls* file. The file consits of four sheets, the first sheet with a name of a *"Data"* contains basic information of implementation schedule to draw bar-chart form of schedule. second sheet *Schedule (Report)* has bar chart form of schedule drawn by macro program "Implementation Sked. Report" incorporated in the workbook file. third and fourth sheet also keeps bar-chart form of implementation schedules created by macro programs *Implementation-Sked-Map(1)* and *Implementation-Sked-Map(2)* respectively. The second to fourth sheets are prepared for presentation purposes in reports and maps. Users can select either type of format at their will and modify the format of sheets to their desired size and appearance once they are created by macro programs.

Care must be taken in changing sheet names, the macro programs always refer prespecified sheet names written in the program for input and output data. Changing names night cause run time error of the programs.

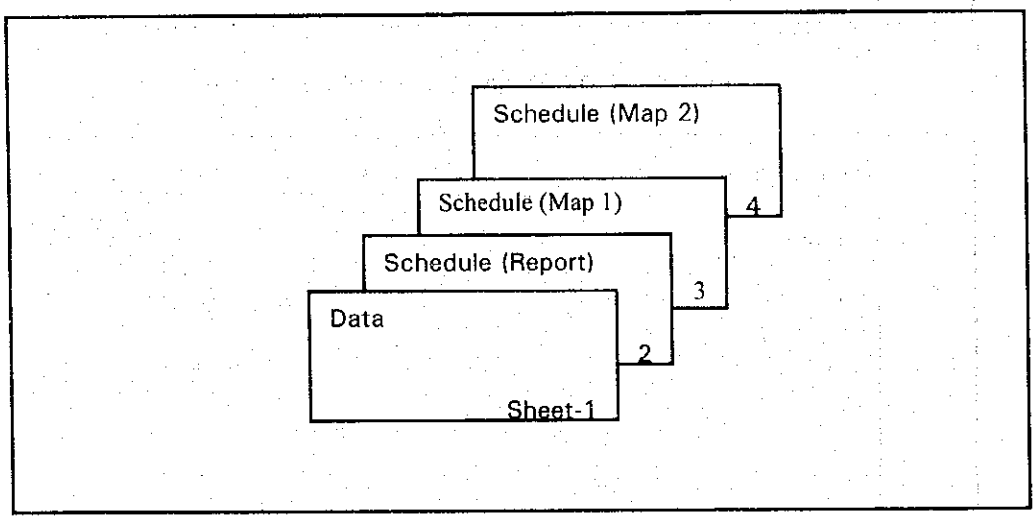

5.4 OTHER PROJECT INFORMATION (LIST)

Other project information such as breakdown of construction cost, project cost. benefit, and project prioritization data are stored in LIST directory in text file format. Users who need detailed project information for the purpose of various analysis other than analyses done by the Study Team can utilize those data by extracting desired information from the files.

For easy access to the files and retrieval of necessary information, all files in the directory are stored in a text file format.

The file with a name of "ReadMe.txt" contains explanation of format and type of data in each file. Users are advised to read the file prior to manipulate the information of the files.

6. GIS DATABASE

6.1 DATA STRUCTURE

All GIS information is stored in MapInfo format. MapInfo data consists of the following types of files:

- TAB file : Table file contains text data describing format of files of MapInfo data.
- DAT file : Data file contains tabulated row data working with other database such as Dbase, FoxBASE, delimited ASCIL, Lotus 123 or Excel files.
- MAP file : Map file contains X, Y, coordinates with graphic objects.
- ID file : Index file contains cross-reference information with graphic objects.
- WOR file : Workspace file contains information regarding names of tables utilized in the workspace and layout format of a map for print out. Information in the workspace is saved as text format.

On type of map data consists of four (4) files i.e. TAB, DAT, MAP and ID files. These files are inter-linked with each other for building a part of map, which is called a *"layer"* in MapInfo. Users shall not be bothered about file types and file extension names of Map data since inter-linking between files is done by MapInfo whenever user open a file. User shall just select TAB file name for opening map data.

Workspace file preserves setup of map layout designed by users.
Four 4 types of workspace files are stored in MAP directory

- one for existing condition maps,
- one for master plan maps,
- one for project location maps and
- one for link and node network maps.

Users can see and print out complete set of maps with pre-specified layout and information without any editing works if Workspaces are used.

6.2 TABLE FILES

One set of *Table* files with graphic objects forms one map layer in computer mapping system.

Map layers are resemblance to transparent films showing different parts of map son their surfaces and stacked on top of one another and allow users to see all aspects of the map at the same time.

For example, one layer may contain provincial boundaries, a second layer may have location of municipalities and a third layer might consist of text labels of municipal names. Laying these transparencies one on top of the other builds a complete map.

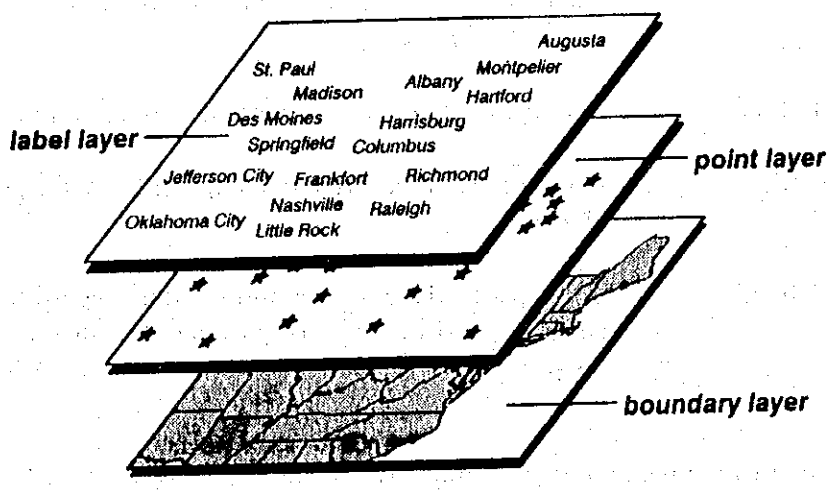

Users can edit layers to have a customized map by changing scale, color, font, fill pattern, line type, etc.

Table 6-1 shows list of MapInfo table files and workspaces stored in MAP directory while Figure 6-1 illustrates conceptual diagram of MapInfo layers to be overlaid to have above mentioned four (4) types of maps.

As shown in Table 6-1, numerous types of tables regarding Master Plan Study are available in the GIS database and allow users to see, edit and print out.

Users are recommended to read User's Guide for MapInfo Professional published by MapInfo Corporation in USA for detailed operational procedures of MapInfo layers.

TABLE 6-1 TABLE FILES IN GIS DATABASE

Table Name	Type of Data	Description
MapInfo Table CL250 CL250 CL750 : : CL3000	Contour line data (Boundary Layer)	Contour line stored in the database is every 250 meters up to 3000 meters. Every elevation of contours form one set of map data.
VMISSHOR	Shore line data (Boundary Layer)	Shore line of islands in the study area.
VMRIVER	River data (Alignment Layer)	Alignment data of major rivers.
VMPRBDRY	Provincial Boundary (Boundary Layer)	Provincial boundary data.
VMMUBDRY	Municipality Boundary (Boundary Layer)	Municipal boundary data.
VMCITYLN	City Boundary (Boundary Layer)	City boundary data.
VMMUNLOC	Municipality Location (Point Layer)	Location of municipality centers.
VMPRTXT	Provincial Name (Text Layer)	Name of Province
VMMUNTXT	Municipality Name (Text Layer)	Name of Municipalities.
VMSECRD	Road Alignment (Alignment Layer)	Alignment of existing roads surveyed by study team. The data is saved by road link.
VMSECTXT1	Road Number Data (Text Layer)	Road number data of each road link.
VMSECTXT2	Road Number Data (Text Layer)	Road number data of each road link in Iloilo City and Cebu City.
VMANDROAD	Road Alignment	Alignment data of roads proposed by the study team.
VMLVROAD	Road Alignment	Alignment data of roads in outside study area in Mindanao.
VMBRIDGE	Bridge Location (Point Layer)	Bridge location data of surveyed roads.
VMNODE	Node Number (Point Layer)	Node location data of road network for traffic analysis.
VMNODETX1	Node Number (Text Layer)	Node number data
VMNODETX2	Node Number	Node number data for Iloilo City and Cebu City.
VMSCALEBAR	Scale Bar	
MapInfo Workspace EXTROADCON-1 EXTROADCON-2 EXTROADCON-3 EXTROADCON-4 EXTROADCON-5	Existing Road Condition Maps	Print out layout data for existing road condition maps.
MASTER PLAN-1 MASTER PLAN-2 MASTER PLAN-3 MASTER PLAN-4 MASTER PLAN-5	Master Plan Maps	Print out layout data for master plan maps.
PROJECT	Project Location Maps	Print out layout data for project location and schedule maps.
LINKNETWORK	Road Network Data with Node Numbers	Layout data for printing out road network with link and node number for traffic analysis
ROADNETWORK	Road Network Data	Layout data for printing out road network with road number for location maps of road and bridge Inventory Data.

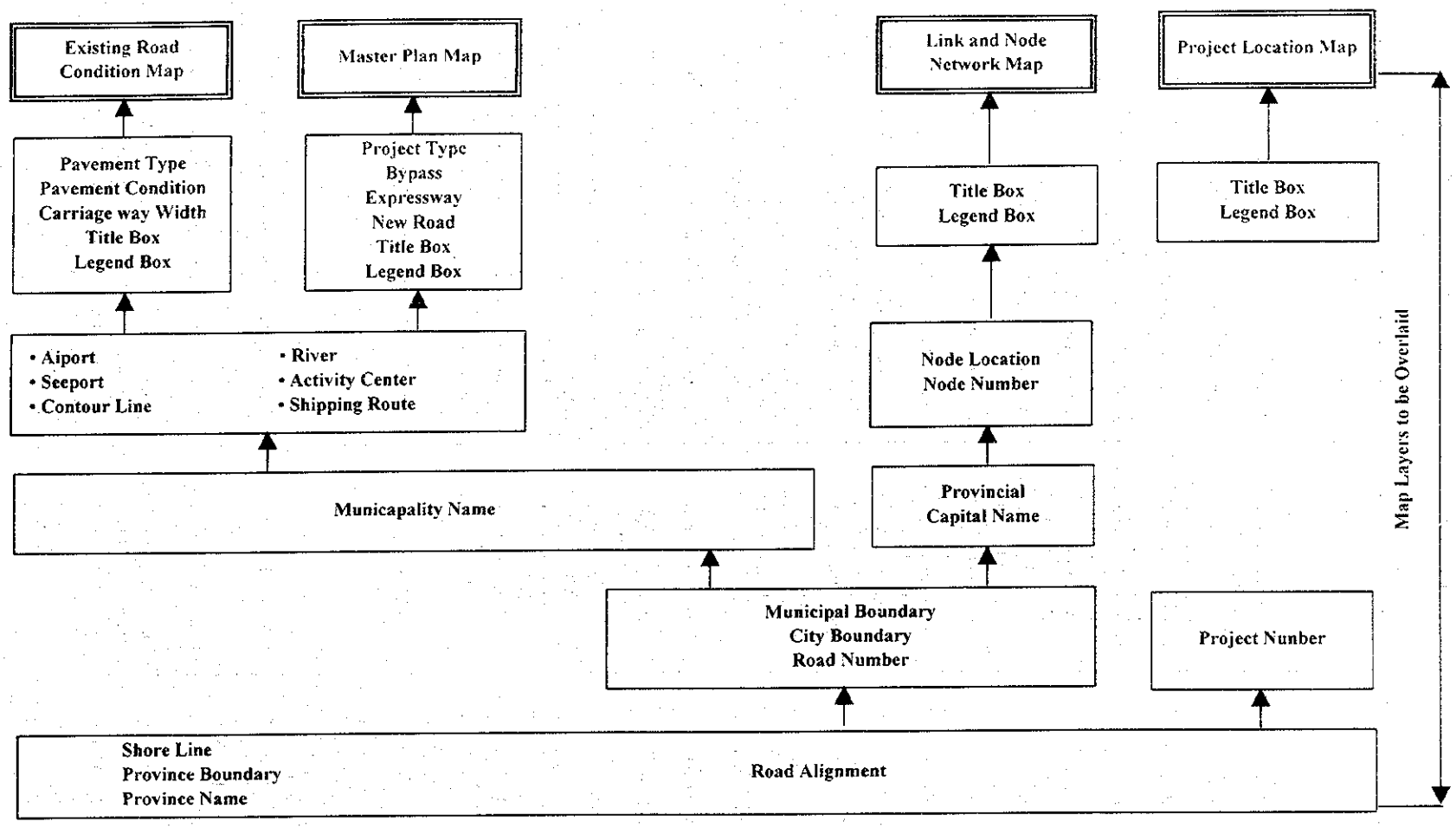

FIGURE 6-1 MAP LAYER OVERLAY DIAGRAM

6.3 WORKSPACE

Editing MapInfo layout generally uses different layers and windows by overlaying each other. MapInfo workspace preserves users setup from session to session so they don't have to start from scratch whenever they resume mapping work.

The workspace is a list of all the tables and windows involved in a work and stored in a file in text format. The workspace keeps track of what windows users open, the size of the windows and their position on the screen, thematic maps, cosmetic objects, labels and styles for fonts, symbols, links and fill pattern used to display objects.

Sample of workspace contents is shown below

```
!Workspace
!Version 400
!Charset WindowsLatin1
Open Table "BasNetScale" As BasNetScale Interactive
Open Table "VmIsShor" As VmIsShor Interactive
Open Table "VmMunLoc" As VmMunLoc Interactive
Open Table "VmPrTxt" As VmPrTxt Interactive
Open Table "VmPrBdry" As VmPrBdry Interactive
Open Table "PavemtCon" As PavemtCon Interactive
Map from BasNetScale
    Position (3.69792, 0.239583) Units "in"
    Width 2.375 Units "in" Height 1.29167 Units "in"
Set Window FronWindow() ScrollBars Off Autoscroll On
Set Map
    CoordSys NonEarth Unit "m"
    Center (1028012.794, 966579.2664)
    Zoom 128119.3617 Unit "m"
    Preserve Scale Display Zoom
    XY Units "m" Distance Unit "m" Area Units "sq.m."
Set Map Layer 0 Selectable
Set Map
    Layer 1
        Display Graphic
        Label Line None Position Center Font ("Arial", 0, 9, 0) Pen (1, 2, 0)
            With ID
            Parallel On Auto Off Overlap Off Duplicates On Offset 2
            Visibility On
Set Map Layer 1 Editable
Map From VmMunLoc, PavemtCon, PavemtCon, PavemtCon, PavemtCon, PavemtCon, VmIsShor,
    VmPrTxt, VmPrBdry
    Position (4.22917, 0.03125) Units "in"
    Width 3.46875 Units "in" Height 4.5625 Units "in"
Set Window FrontWindow() ScrollBars Off Autoscroll On
```

In MAP directory, three types of workspace files are available:

- Existing Road Condition Map
- Master Plan Map
- Project Location Map

Each type of map is briefly discussed in the succeeding sections.

6.3.1 Existing Road Condition Map

Existing Road Condition Map shows condition of surveyed roads by pavement type and carriageway width including location of temporary bridges and impassable rivers on 1/500,000 scale of topographic maps.

The Existing Road Condition Map consists of the following five (5) sheets. Each sheet shows condition of roads in different parts of the Study Area.

Sheet 1 : Covers islands of Marinduque, Romblon, Mindoro, Catanduanes and Panay.

Sheet 2 : Covers islands of Masbate, Negros, Cebu, Bohol, Samar, Leyte, Siquijor and Camiguin.

Sheet 3 : Covers island of Palawan

Sheet 4 : Covers islands of Siquijor, Camiguin, and central and eastern part of Mindanao

Sheet 5 : Covers central and western part of Mindanao Island.

Paper size set in this workspace for printing map is A0 size under ISO standard. Users who wants to print maps through this workspace shall procure A0 size color plotter with resolution 360 dpi or above to have legible print out.

Users can change workspace layout by editing individual layers and/or arranging layout of workspace.

6.3.2 Master Plan Map

Master Plan Map shows future road network and proposed type of work in the study area in relation to other transport mode, development projects and major activity centers on 1/500,000 scale of topographic maps.

The Master Plan Map also consists of five (5) sheets covering same islands/areas as the sheets for existing road condition maps.

Paper size and requirement of print out devices are same as ones for printing out existing road condition maps.

6.3.3 Project Location Map

Project Location Map indicates location of proposed projects to be implemented under Strategic Road Network Development Program on A0 size paper with a scale of 1/2,000,000. Tables showing implementation schedule of each project are also can be printed beside map by retrieving *schedule files* from PROJECT directory.

Project implementation schedule is printed out by Excel after printing out project location through workspace of MapInfo by resetting same paper in the plotter.

6.4 DATA INPUT

There are two types of input data into MapInfo:

- Raster Image and
- Vector Map Image

A raster image is a computerized picture consisting of rows of tiny dots (pixels) and mainly used as display layers only. Unlike vector map images, they cannot have any data attached to them. Rester images are particularly well-suited for use as a backdrop for vector map layers because they provide a much greater level of detail than vector maps.

In contrast, objects in vector images contain coordinate-based data structures represented by X and Y coordinates alike most of MapInfo data.

6.4.1 Raster Image

Raster image can be obtained through scanning objects with a scanner and scanner software. MapInfo can read and display the raster image files created with the scanner software.

Using raster image files, user can bring paper maps, photographs, and other graphic images into map. Using a raster image as the base layer of a map gives user a detailed backdrop for other map layers. User can easily change the size, scale or centerpoint of the displayed image.

Advantage of raster image over vector map image is faster input with greater level of detail but geographical analysis is impossible. A raster map is simply a graphic image that is used for display purposes only. User cannot edit or attach data to it. Raster image data is not used in the database system, all data stored in the database is vector map image.

But user can add raster images by scanning images of objects and overlay on existing vector map data.

6.4.2 Vector Image

Vector map image is inputted into computer by digitizing objects. Digitizing paper maps into computer is a time-consuming process, but it has some advantages over scanned raster images, particularly if user wants to use map for geographic analysis.

Digitizing a map creates a vector image that is just like any other map layer. Each digitized feature becomes a map object that user can edit, move, customize or attach data to it.

To digitize map, digitizing tablet and a puck and their device driver are required Software for digitizing work may be MapInfo, Autocad, Micro Station, and other softwares which can create either of the following type of file.

MapInfo Interchange	:	.MIF
AutoCad	:	.DXF
MapInfo DOS	:	.MBI or .MMI
MapInfo DOS Image	:	.IMG

APPENDIX 2-1

DATA CHECKS FOR ROAD AND BRIDGE INVENTORY

ERROR CHECK OF ROAD INVENTORY DATA

A. VALIDITY CHECK

1. **Road Number** (cell : AD2)

Data File shall be created province by province.

Rule of naming data file is:

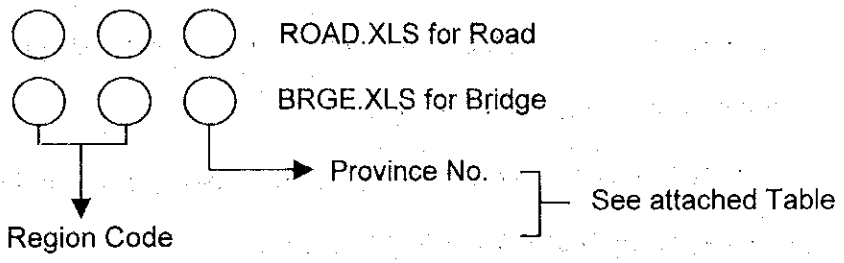

Ex. 4B2ROAD.XLS for Road in Occidental Mindoro
4B2BRGE.XLS for Road in Occidental Mindoro

If road number in cell C3 does not begin with province code 4B2, "Error" will appear.

2. **Road Name** (cell : AD3)

Maximum 50 characters, if road name is more than 50 characters, "Error" appears.

If road name is not entered in cell G3, "Error" appears.

3. **Administrative Classification** (cell : AD4)

Capital letter of N, P, C only, if other letters are entered, "Error" will appear.

4. **Functional Classification** (cell : AD5)

Capital letter of NS, WE, OR, 2N, PR, CR only, if other letters are entered, "Error" will appear.

5. **A/F** (cell : AD6)

Adjustment factor must be $0.8 \leq A/F \leq 1.3$.

If adjustment factor is outside the range, "Error" will appear.

6. **Sign** (cell : AD7)

Either "+" or "-" if other letters are entered, "Error" will appear.

7. **Date** (cell : AD8)

Survey date must be March 1 – May 15, 1997.

If survey date is not within the specified period, "Error" will appear.

8. **Pavement Type** (cell : AB11)

C, A, G, E, '-' only, if other letters are entered, "Error" will appear.

9. **Pavement Condition** (cell : AD7)

G, F, B, V, I, U, '-' only, if other letters are entered, "Error" will appear.

10. **Carriageway Width** (cell : AD11 - below)

Numerical value must be entered for existing road, if data other than numerical value is entered, "Error" will appear.

For non-existing road, "-" must be entered, if other character is entered, "Error" will appear.

11. **Median Width** (cell : AE11 - below)

Numerical value must be entered if median exists, if data other than numerical value is entered, "Error" will appear.

If median does not exist, "-" shall be entered, if other character is entered, "Error" will appear.

12. **Shoulder Type** (cell : AG11 - below)

C, A, G, E, '-' only, if other character is entered, "Error" will appear.

13. **Sidewalk** (cell : AH11 - below)

W, W/O only, if other character is entered, "Error" will appear.

14. **Terrain** (cell : AI11 - below)

F, R, M only, if other character is entered, "Error" will appear.

15. **Landuse** (cell : AJ11, AK11 - below)

A, F, W, P, S, U only, if other character is entered, "Error" will appear.

16. **Survey Method** (cell : AL11 - below)

F, H only, if other character is entered, "Error" will appear.

B. CONSISTENCY CHECK

1. Road Number (cell : AO4)

Rule of naming road number is:

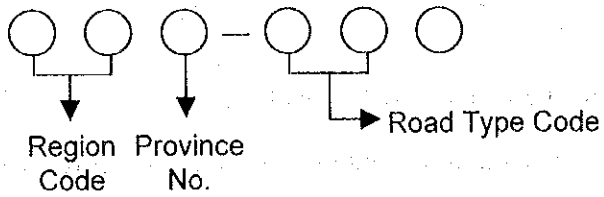

01 – 09	Expressway (National)
11	Pan-Philippine Highway (National)
12	Manila North Road (National)
21 – 59	Other National Road
61 –	Provincial City Road
91 –	New road proposed by the Study

If road type code 13 through 20 is used, "Error" will appear.

If road type code is less than 60 and administrative road class is not "N", "Error" will appear.

If road type code is between 61 – 89 and administrative road class is not "P" nor "C", " Error" will appear.

2. Road Classification (cell : AO5)

If administrative class is "N" and functional class is "PR" or "CR", "Error" will appear.

If administrative class is "P" and functional class is not "PR", "Error" will appear.

If administrative class is "C" and functional class is not "CR", "Error" will appear.

3. Pavement Type/Width (cell : AM11 - below)

If pavement type is "-" and pavement width is not zero, "Error" will appear.

If pavement type is not "-" and pavement width is zero, "Error" will appear.

4. Pavement Condition (cell : AN11 - below)

If pavement type is "-" and pavement width is not "-", "Error" will appear.

If pavement type is not "-" and pavement width is "-", "Error" will appear.

5. **Median Width** (cell : AO11 - below)

If median width is zero and number of carriageway is not zero, "Error" will appear.

If median width is greater than zero and number of carriageway is zero, "Error" will appear.

6. **Shoulder Width/Type** (cell : AP11 - below)

If shoulder width is zero and shoulder type is not "-", "Error" will appear.

If shoulder width is greater than zero and shoulder type is "-", "Error" will appear.

7. **Substandard Alignment Section** (cell : AQ11 - below)

If total length of (V + H) is greater than subsection length, "Warning" will appear.

It is not an error though total length of substandard alignment exceeds subsection length since substandard alignment of both horizontal and vertical can be observed at same location. Warning message in this cell is to remind user whether input data is correct or not.

8. **Disaster Length** (cell : AR11 - below)

If total length of (CS + ES + DF + SR + FR) is greater than subsection length, "Warning" will appear.

It is not an error though total length of disaster spots exceeds subsection length since several types of disaster may occur at the same location at same time. Warning message in this cell is a simple reminder to user to confirm whether input data is correct or not.

ROAD INVENTORY DATA SHEET

ROAD CONDITION SURVEY SHEET

Sheet Number :
Road Number : 056-21A
Admin. Road Class : N
Length 7.78 Km

Road Name: Virac-Jct. Bato Road
Functional Class: OR SRA
(Station From 0.000 Sign +
Travel Time 8.18

A/F: 0.961
Date: 10/11/97

Study Road Name: Catanduanes Circumferential Road
Sequence Position: 1
Isle Code: CA Project No.: 1 Seg. No.: 1

Sub-Section No.	Length (Km)	Odo-meter Reading Beginning	Odo-meter Reading End	Station Beginning	Station End	Carriageway Pavement: Type C,A,G,E,-	Carriageway Pavement: No. of Carr'w	Carriageway Pavement: Width (m)	Carriageway Pavement: Condition G, F,B,V,I,U,-	Carriageway Pavement: Median Width (m)	Shoulder: Type C,A,G,E,-	Shoulder: Width (m)	Side walk W, W/O	Terrain F,R,M	Land Use L	Land Use R	Substandar Alignment Section (m) H	Substandar Alignment Section (m) V	Length of Disaster Potential Section (m) CS	ES	DF	SR	FR	Survey Method F,H	Remarks
1	0.865	0.00	0.90	0.000	0.865	C		6.70	G	-	G	1.50	W/O	F	U	U								F	Prov'l Capitol Virac
2	0.288	0.90	1.20	0.865	1.153	C		6.70	G	-	G	2.00	W/O	F	U	U								F	
3	0.769	1.20	2.00	1.153	1.922	C		6.70	G	-	G	2.00	W/O	F	A	A								F	
4	0.961	2.00	3.00	1.922	2.883	C		6.70	G	-	G	1.50	W/O	F	F	F								F	
5	0.384	3.00	3.40	2.883	3.267	C		6.70	G	-	G	1.50	W/O	R	F	F								F	
6	2.210	3.40	5.70	3.267	5.478	C		6.70	F	-	G	1.50	W/O	F	U	U								F	
7	0.288	5.70	6.00	5.478	5.766	C		6.70	G	-	G	2.00	W/O	F	F	F								F	
8	0.384	6.00	6.40	5.766	6.150	C		6.70	G	-	G	1.00	W/O	R	F	S								F	
9	0.365	6.40	6.78	6.150	6.516	A		6.00	F	-	G	1.00	W/O	R	F	S								F	
10	0.884	6.78	7.70	6.516	7.400	C		6.70	F	-	G	1.00	W/O	F	F	S								F	
11	0.384	7.70	8.10	7.400	7.784	A		6.00	B	-	G	1.00	W/O	F	F	F								F	Jct. Bato

Station at end 7.784

DATA CHECK SHEET OF ROAD INVENTORY DATA

	AA	AB	AC	AD	AE	AF	AG	AH	AI	AJ	AK	AL	AM	AN	AO	AP	AQ	AR	AS	AT	AU	AV	AW	AX	AY	AZ	BA	BB	BC
1								**Validity Check**								**Consistency Check**			056		N	P	C						
2		Road Number						056-21A													NS	EW	OR	2N	PR	CR			
3		Road Name																		1	C	A	G	E	-				
4		Admin. Class.											Road Number						3		G	F	B	V	!	U	-		
5		Functional Class											Road Class								C	A	G	E	-				
6		A/F																			W	W/O							
7		Sign																			F	R	M						
8		Date		Error																	A	F	W	P	S	U	B		
9		Pavement	Pavement	Carway	Median	Shoulder	Shoulder	Sidewalk	Terrain	Land	Land	Survey	Pavement	Pavement	Median	Shoulder	Subst.	Disaster			L	R	-						
10		Type	Condition	Width	Width	Type	Width		Type	Use(L)	Use (R)	Method	Type/wdt	ype/Cond	Carway	width/type	Alignment				F	H							
11	1																			1	1	3	2	1	6	6	1		0.7984
12	2																			1	1	3	2	1	6	6	1		0.2661
13	3																			1	1	3	2	1	1	1	1		0.7097
14	4																			1	1	3	2	1	2	2	1		0.8871
15	5																			1	1	3	2	2	2	2	1		0.3548
16	6																			1	2	3	2	1	6	6	1		2.4112
17	7																			1	1	3	2	1	2	2	1		0.2661
18	8																			1	1	3	2	2	2	5	1		0.3548
19	9																			2	2	3	2	2	2	5	1		0.3984
20	10																			1	2	3	2	1	2	5	1		0.9645
21	11																			2	3	3	2	1	2	2	1		0.7688
22																													

PROVINCE CODE

Region	Province	Province Code
IV-B	Marinduque	4B1
	Occidental Mindoro	4B2
	Oriental Mindoro	4B3
	Palawan	4B4
	Romblon	4B5
V	Masbate	055
	Catanduanes	056
VI	Aklan	061
	Antique	062
	Capiz	063
	Iloilo	064
	Guimaras	065
	Negros Occidental	066
	Iloilo City	067
VII	Bohol	071
	Cebu	072
	Negros Oriental	073
	Siquijor	074
VIII	Leyte	081
	Southern Leyte	082
	Biliran	083
	Eastern Samar	084
	Northern Samar	085
	Western Samar	086
IX	Zamboanga del Norte	091
	Zamboanga del Sur	092
X	Bukidnon	101
	Misamis Occidental	102
	Misamis Oriental	103
	Camiguin	104
XI	Davao del Norte	111
	Davao del Sur	112
	Davao Oriental	113
	South Cotabato	114
	Saranggani	115
	Davao City	116
XII	Lanao del Norte	121
	North Cotabato	122
	Sultan Kudarat	123
ARMM	Lanao del Sur	AR1
	Maguindanao	AR2

ERROR CHECK OF BRIDGE INVENTORY DATA

A. VALIDITY CHECK

1. Road Number (cell : AE2)

Data File shall be created province by province.

Rule of naming data file is:

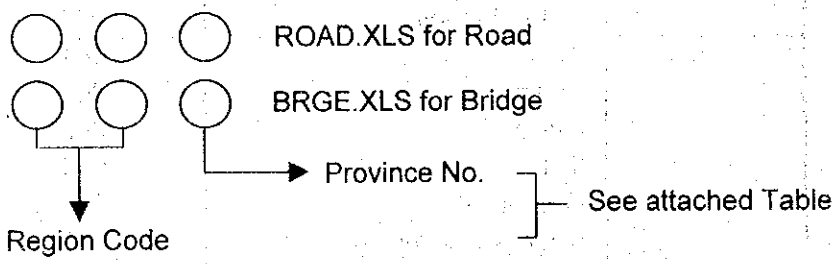

Ex. 4B2ROAD.XLS for Road in Occidental Mindoro
4B2BRGE.XLS for Road in Occidental Mindoro

If road number in cell C3 does not begin with province code 4B2, "Error" will appear.

2. Road Name (cell : AE3)

Maximum 50 characters, if road name is more than 50 characters, "Error" appears.

If road name is not entered in cell G3, "Error" appears.

3. Administrative Classification (cell : AE4)

Capital letter of N, P, C only, if other letters are entered, "Error" will appear.

4. Functional Classification (cell : AE5)

Capital letter of NS, WE, OR, 2N, PR, CR only, if other letters are entered, "Error" will appear.

5. Date (cell : AE6)

Survey date must be March 1 – May 15, 1997.

If survey date is not within the specified period, "Error" will appear.

6. Bridge Type (cell : AD9)

P, B, T, S, F, N only, if other letter is entered, "Error" will appear.

7. **Slab Superstructure, Substructure, 1st Approach, 2nd Approach** (cell : AE9, AI9 - below)

-, L, M, H, U and blank only, if other letter is entered, "Error" will appear.

8. **Survey Method** (cell : AJ9 - below)

F, H only, if other letter is entered, "Error" will appear.

B. CONSISTENCY CHECK

1. **Road Number** (cell : AM3)

Rule of naming road number is:

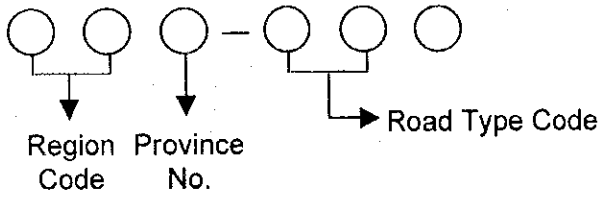

01 – 09	Expressway (National)
13	Pan-Philippine Highway (National)
14	Manila North Road (National)
21 – 59	Other National Road
61 –	Provincial City Road
91 –	New road proposed by the Study

If road type code 13 through 20 is used, "Error" will appear.

If road type code is less than 60 and administrative road class is not "N", "Error" will appear.

If road type code is between 61 – 89 and administrative road class is not "P" nor "C", " Error" will appear.

2. **Road Classification** (cell : AM4)

If administrative class is "N" and functional class is "PR" or "CR", "Error" will appear.

If administrative class is "P" and functional class is not "PR", "Error" will appear.

If administrative class is "C" and functional class is not "CR", "Error" will appear.

3. **Bridge Type/Carriageway Width** (cell : AK9 - below)

If bridge type is "N" or "F" and carriageway width is not "0.0", Error will appear.

If bridge type is not "N" nor "F" and carriageway width is less than 2.0, Error will appear.

4. **Approach Damage** (cell : AL9, AM9 - below)

If approach damage is "-" or blank and damage length is not "0.0", "Error" will appear.

If approach damage is not "-" or blank and damage length is "0.0", "Error" will appear.

DATA CHECK OF BRIDGE INVENTORY DATA

BRIDGE CONDITION SURVEY SHEET

Sheet No. :
Road No.: 056-21A
Adm. Road Class: N. P. C N
Travel Time 0.00

Road Name: Virac-Jct. Bato
Functional Class: OR
Date: 10/11/97

	A	B	C	D	E	F	G	H	I	J	K	L	M	N	O	P	Q	R	S	T	U	V	W	X	Y	Z	AA
6	Section No.	Sub-Section No.	Bridge Name	Odometer Reading Km	Station	Bridge Type P,B,T,S,F,N	Bridge Length m	Span Length									Width		Bridge Damage			Approach Road Damage				Survey Method F,H	Remarks
																	Carri-ageway	Side-Walk	Slab -, L,M,H,U	Super-St -, L,M,H,U	Sub-St. -, L,M,H,U	1st Approach -, L,M,H,U	1st Approach Length	2nd Approach -, L,M,H,U	2nd Approach Length		
9	A	1	Sinibaan	0.50	0.481	P	15.20	1	X	15.20	X			X			7.40	0.70	-	-	M	-		-		F	
10	A	3	Kenipean	1.20	1.153	P	8.30	1	X	8.30	X			X			7.40	0.50	-	-	L	-		-		F	
11	A	3	Sibanhan	1.70	1.634	P	24.00	2	X	12.00	X			X			6.70	0.50	-	L	-	-		-		F	
12	A	4	Marinawa	2.80	2.691	P	8.00	1	X	8.00	X			X			7.50	0.50	-	H	M	-		-		F	damaged deck girder
13	A	6	Binanuanan	4.10	3.940	P	21.00	1	X	21.00	X			X			7.50	0.80	-	-	-	-		-		F	
14	A	7	Cabugao	5.70	5.478	P	5.00	1	X	5.00	X			X			7.50	0.70	-	-	-	-		-		F	
15	A	9	Labandera	6.30	6.054	P	6.20	1	X	6.20	X			X			7.50	0.70	-	-	-	-		-		F	
16	A	11	Guinobatan	6.80	6.535	P	5.00	1	X	5.00	X			X			7.40	0.50	-	-	-	-		-		F	submerged bridge

DATA CHECK OF BRIDGE INVENTORY DATA

	AB	AC	AD	AE	AF	AG	AH	AI	AJ	AK	AL	AM	AN	AO	AP	AQ	AR	AS	AT	AU	AV
1					**Validity Check**					**Consistency Check**			056								
2			Road Number		056-21A								1	N	P	C					
3			Road Name							Road Numkber			3	NS	EW	OR	2N	PR	CR		
4			Admin. Class.							Functional Class.				P	B	T	S	F	N		
5			Funct.l Class.											-	L	M	H	U			
6			Date	Error										F	H						
7	Subsec.	Subsec.	Bridge	Slab	Super.	Substruct.	1 st Appr.	2nd Appr.	Survey	Bridge	Approach 1	Approach 2									
8	No.	No.	Type	Damage	Damage	Damage	Damage	Damage	Method	type/width	damage/length	damage/length									
9	A	1												1	1	1	3	1	1	1	0.0000
10	A	3												1	1	1	2	1	1	1	0.0000
11	A	3												1	1	2	1	1	1	1	0.0000
12	A	4												1	1	4	3	1	1	1	0.0000
13	A	6												1	1	1	1	1	1	1	0.0000
14	A	7												1	1	1	1	1	1	1	0.0000
15	A	9												1	1	1	1	1	1	1	0.0000
16	A	11												1	1	1	1	1	1	1	0.0000

APPENDIX 3-1

TRAFFIC ANALYSIS PROGRAMS

PROGRAM NAME : **ODCHECK1.EXE**

DESCRIPTION

A program to check data validity and consistency of vehicle OD Survey Data.

INPUT DATA

1 : STA***.TXT : Vehicle OD Survey Data

2 : COMCODE.DAT : Commodity Code Data

3 : ZONECODE.DAT : Traffic Zone Code Data

OUTPUT DATA

1 : Error message (user specified filename)

Items to be checked:

1.	Station Number	:	station number must be the same as one in the data filename.
2.	Direction Number	:	direction number must be the same as one in the data filename.
3.	Survey Date	:	date in the first two records or the following day (dates in the first two records should be the same)
4.	Survey Time	:	6 - 17
5.	Vehicle Type	:	1 - 10
6.	Fuel Type	:	1 - 2
7.	Origin Code	:	included in the file ZONECODE.DAT and in the island where the survey station is located (Samar and Leyte are regarded as the same island)
8.	Destination Code	:	included in the file ZONECODE.DAT and in the island where the survey station is located (Samar and Leyte are regarded as the same island)
9.	Trip Purpose	:	1 - 4 (or 0 for the vehicle type other than 1)
10.	No. of Passengers	:	1 - 100
11.	Seat Capacity	:	10 - 100 (or 0 for the vehicle type other than 2, 4 or 5)
12.	Commodity Code	:	included in the file COMCODE.DAT
13.	Commodity Weight	:	0 - 30,000 (should be 0 if commodity code is 0 or 99, otherwise should not be 0)
14.	Total Commodity Weight	:	0 - 30,000 and not less than sum of three commodity weights.
15.	Loading Capacity	:	no check
16.	Expansion Factor	:	no check

PROCESS FLOW

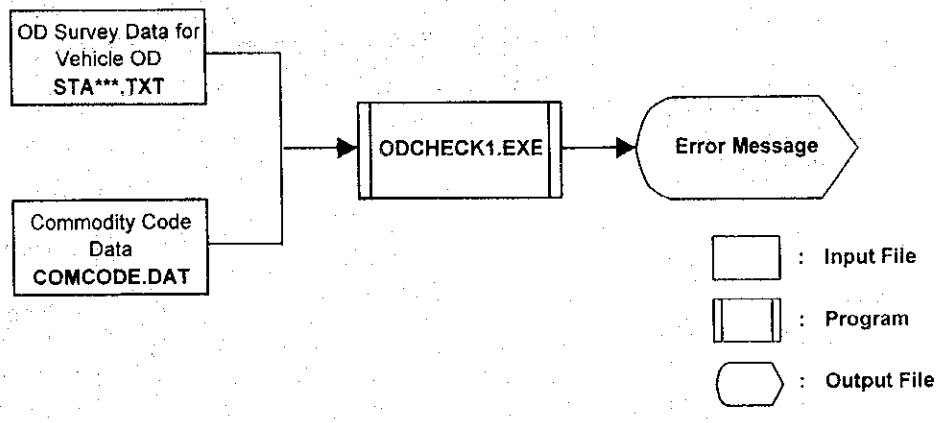

PROGRAM NAME : **ODCHECK2.EXE**

DESCRIPTION

A program to check data validity and consistency of passenger OD Survey Data.

INPUT DATA

1 : ZONECODE.DAT : Traffic Zone Data

2 : PASS***.TXT : OD Survey Data for Passenger OD

OUTPUT DATA

1 : Error message (user specified filename)

Items to be checked:

1. Station Number : station number must be the same as one in the data filename.
2. Direction Number : direction number must be the same as one in the data filename.
3. Survey Date : date in the first two records or the following day (dates in the first two records should be the same)
4. Survey Time : 6 - 17
5. Origin Code : included in the file ZONECODE.DAT and in the island where the survey station is located (Samar and Leyte are regarded as the same island)
6. Destination Code : included in the file ZONECODE.DAT and in the island where the survey station is located (Samar and Leyte are regarded as the same island)
7. Trip Purpose : 1 - 4 (or 0 for the vehicle type other than 1)

PROCESS FLOW

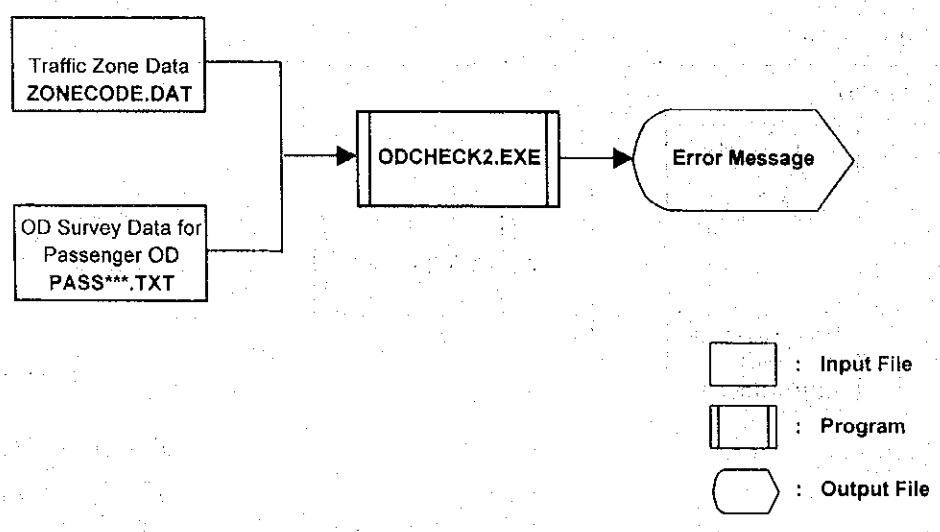

PROGRAM NAME : **ODCHECK3.EXE**

DESCRIPTION

A program to count internal trips of vehicle OD survey data and to identify OD pairs which cannot be determined from OD survey data.

INPUT DATA

1 : STA***.TXT : Vehicle OD Survey Data (*** : Station No)

2 : *****NET.DAT : Road Network Data (***** : Island Name)

3 : ZONECODE.DAT : Traffic Zone Data

4 : SLINK.DAT : Station Link Data

OUTPUT DATA

1 : Message (user specified filename)

PROCESS FLOW

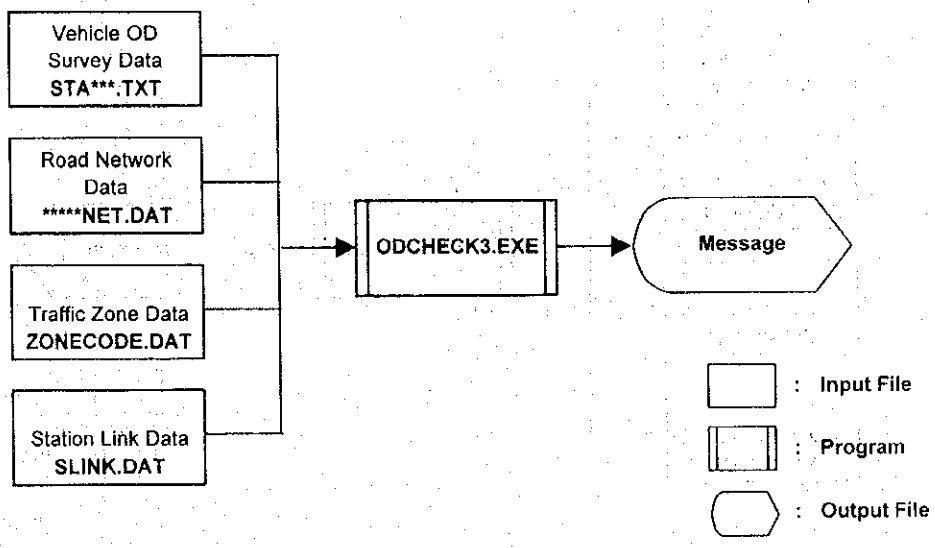

PROGRAM NAME : **ODCHECK4.EXE**

DESCRIPTION

A program to count internal trips of passenger OD survey data and to identify OD pairs which cannot be determined from OD survey data.

INPUT DATA

1 : PASS***.TXT : Passenger OD Survey Data

2 : *****NET.DAT : Road Network Data (***** : Island Name)

3 : ZONECODE.DAT : Traffic Zone Data

4 : SLINK.DAT : Station Link Data

OUTPUT DATA

1 : Message (user specified filename)

PROCESS FLOW

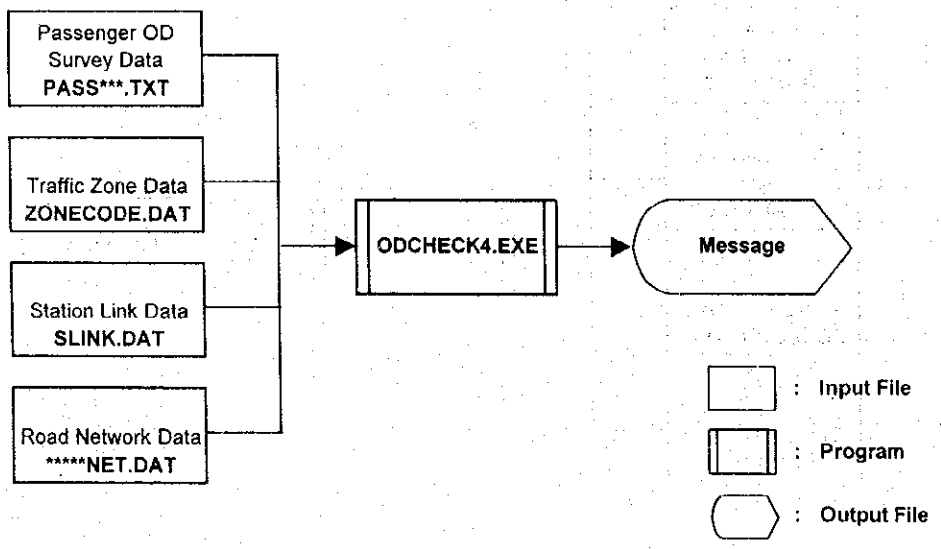

PROGRAM NAME : **KNOWNOD2.EXE**

DESCRIPTION

Program to determine Known ODs for Islands of Panay, Cebu, Leyte, Samar, Negros and Mindanao based on the roadside OD survey data and traffic count data.

INPUT DATA

1	******NET.DAT	:	Road Network Data (****** : Island Name)
2	SLINK.DAT	:	Station Link Data
3	AADT.DAT	:	Traffic Count Data
4	ZONECODE.DAT	:	Traffic Zone Data
5	COMCODE.DAT	:	Commodity Code Data
6	PART.DAT	:	Zone Partition Data
7	STA***.TXT	:	Vehicle OD Survey Data
8	PASS***.TXT	:	Passenger OD Survey Data

(*** : OD Survey Station Number)

OUTPUT DATA

1	OD******.DAT	:	Known OD File (Vehicle, Passenger, Commodity)
2	WAR1.***	:	Warning File
3	INF1.***	:	Information File

(****** : Island Name)

PROCESS FLOW

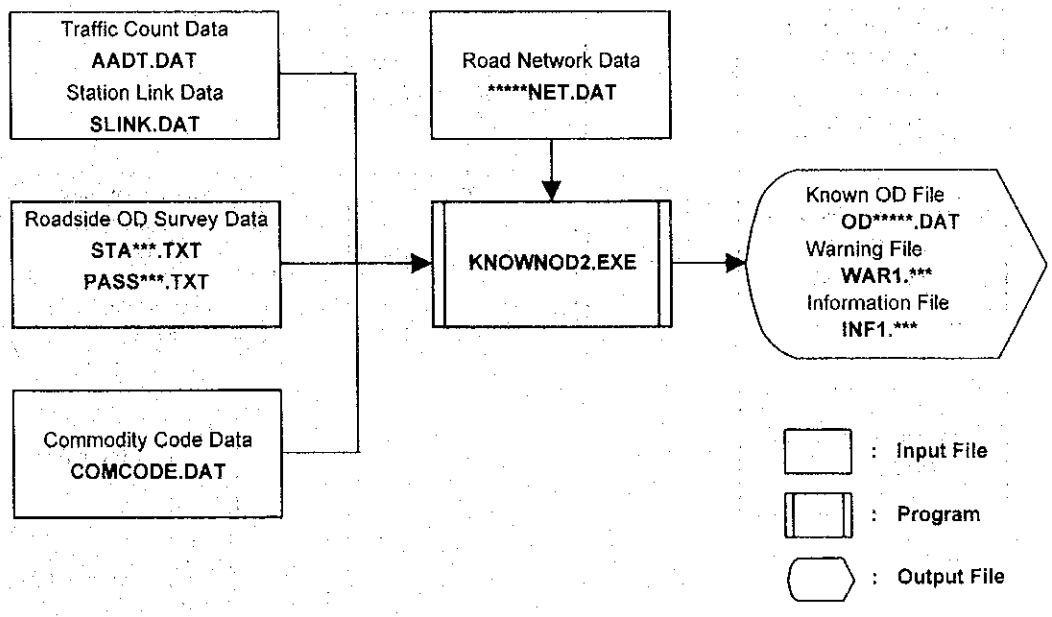

PROGRAM NAME : **KNOWNOD3.EXE**

DESCRIPTION

A program to determine Known ODs by commodity types for Islands of Panay, Cebu, Leyte, Samar, Negros, and Mindanao based on roadside OD survey data and traffic count data.

INPUT DATA

1	******NET.DAT	:	Road Network Data (****** : Island Name)
2	SLINK.DAT	:	Station Link Data
3	AADT.DAT	:	Traffic Count Data
4	ZONECODE.DAT	:	Traffic Zone Data
5	COMCODE.DAT	:	Commodity Code Data
6	PART.DAT	:	Zone Partition Data
7	STA***.TXT	:	Vehicle OD Survey Data
8	PASS***.TXT	:	Passenger OD Survey Data

(*** : OD Survey Station Number)

OUTPUT DATA

1	OD2*****.DAT	:	Known OD File by Commodity Types
2	WAR2.***	:	Warning File
3	INF2.***	:	Information File

(***** : Island Name)

PROCESS FLOW

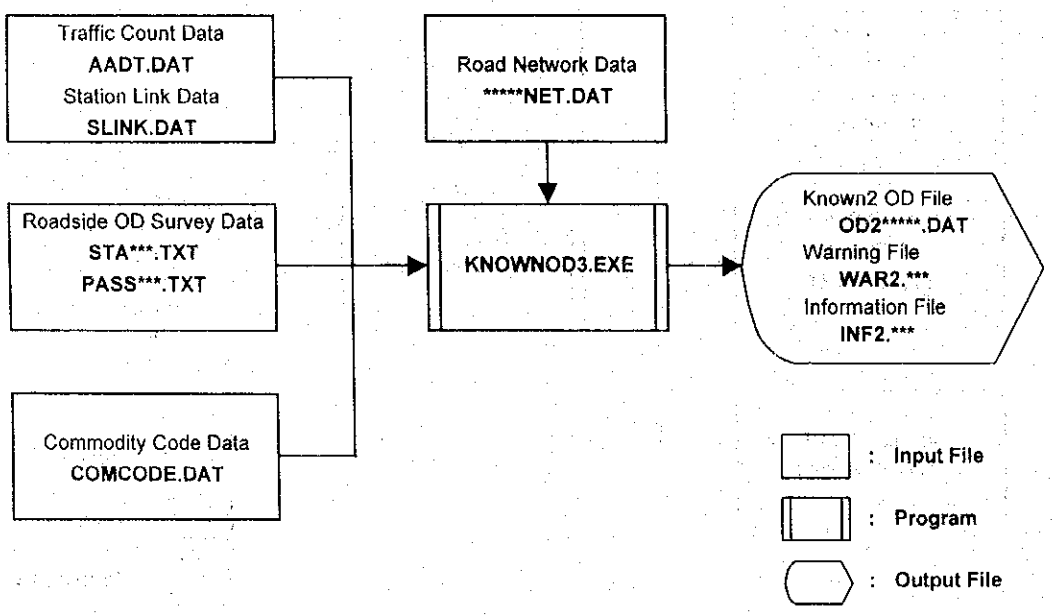

PROGRAM NAME : **UNK1S.EXE**

DESCRIPTION

A program to determine Unknown vehicle ODs based on Known OD by establishing trip model using multiple regression analysis and to construct known and unknown combined OD tables for islands with OD surveys.

INPUT DATA

1	******NET.DAT	:	Road Network Data (****** : Island Name)
2	ZONECODE.DAT	:	Traffic Zone Data
3	POPUL.DAT	:	Population Data by Traffic Zones
4	OD******.DAT	:	Known Vehicle OD Data (****** : Island Name)
5	SLINK.DAT	:	Station Link Data
6	TRAF.DAT	:	Traffic Count Data
7	PART.DAT	:	Zone Partition Data

OUTPUT DATA

1	OD.***	:	Vehicle OD (Known and Unknown)
2	TRF.***	:	Assigned Traffic Volume
3	WAR1S.***	:	Warning File
4	INF1S.***	:	Information File

PROCESS FLOW

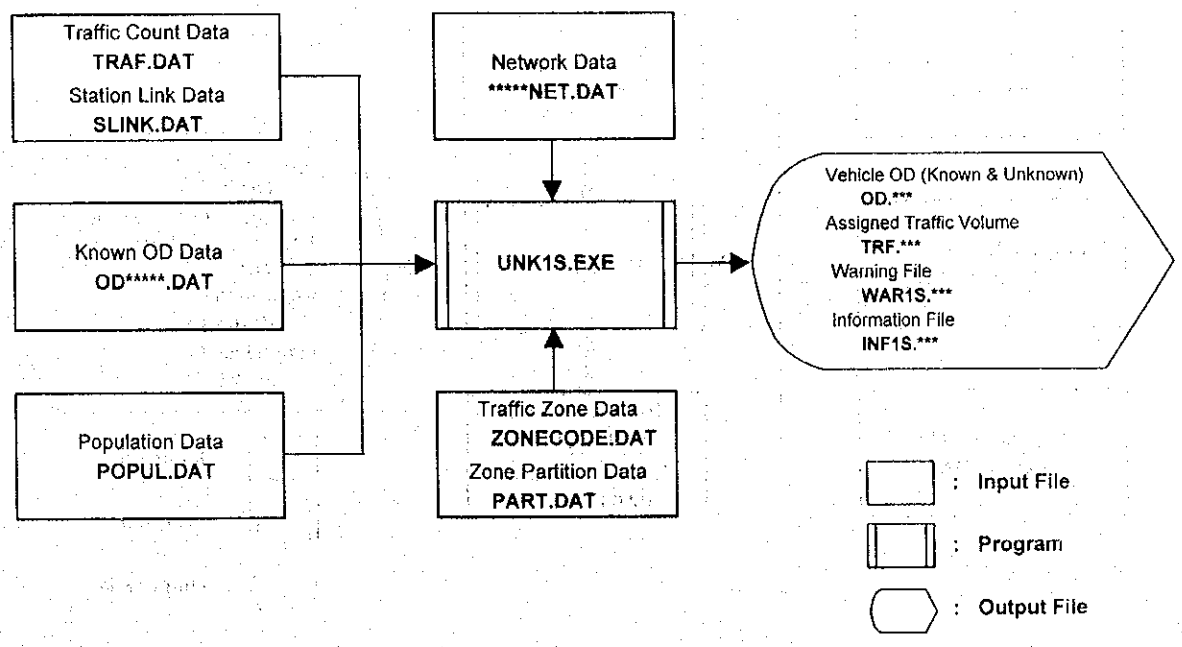

PROGRAM NAME : **UNK2S.EXE**

DESCRIPTION

A program to prepare Unknown vehicle ODs based on control traffic volume and gravity model established from OD survey results for Islands where OD survey was not carried out.

INPUT DATA

1	******NET.DAT	:	Road Network Data (****** : Island Name)
2	ZONECODE.DAT	:	Traffic Zone Data
3	POPUL.DAT	:	Population Data by Traffic Zones
4	GRAVITY.DAT	:	Gravity Mode Coefficients
5	TRAF.DAT	:	Control Traffic Volume
6	PART.DAT	:	Zone Partition Data

OUTPUT DATA

1	OD.***	:	Vehicle OD (Unknown) *** : Islands Code
2	TRF.***	:	Assigned Traffic Volume
3	WAR2S.***	:	Warning File
4	INF2S.***	:	Information File

PROCESS FLOW

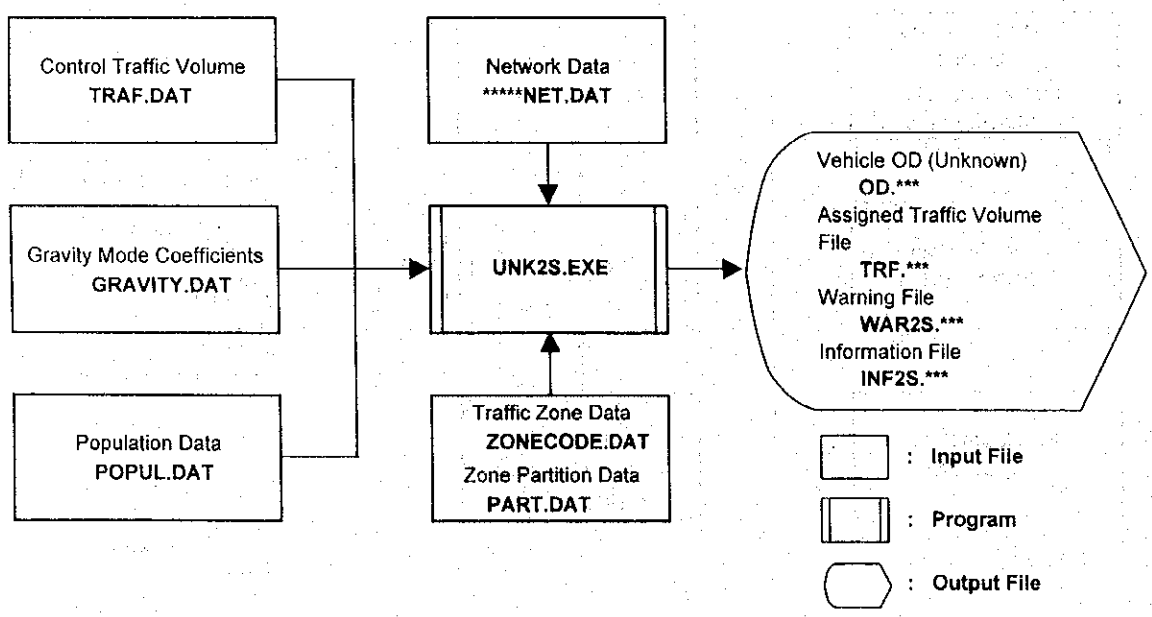

PROGRAM NAME : **UNK3S.EXE**

DESCRIPTION

A program to determine Unknown passenger and commodity OD for Islands of Panay, Negros, Cebu, Leyte, Samar and Mindoro where OD survey was carried out and to prepare Known and Unknown combined OD data.

INPUT DATA

1	******NET.DAT	:	Road Network Data (****** : Island Name)
2	ZONECODE.DAT	:	Traffic Zone Data
3	PART.DAT	:	Zone Partition Data
4	SLINK.DAT	:	Station Link Data
5	OD******.DAT	:	Known OD Data (Vehicle, passenger and commodity) constructed by KNOWNOD2.EXE
6	OD2******.DAT	:	Known OD Data (Commodity) Constructed by KNOWNOD3.EXE
7	OD.***	:	Known and Unknown Combined Vehicle OD by UNK1S.EXE
8	POPUL.DAT	:	Population Data by Traffic Zones

OUTPUT DATA

1	OD2.***	:	Known and Unknown OD Data by Passenger and Commodity
2	INF3S.***	:	Information Data

PROCESS FLOW

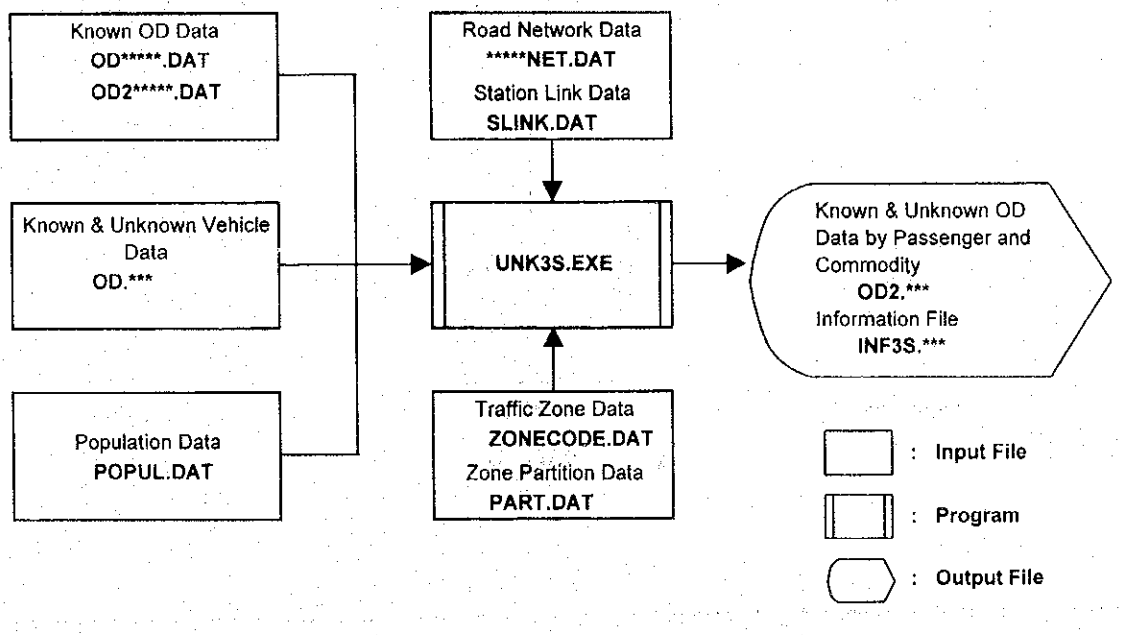

PROGRAM NAME : **ZONEDAT1.EXE**

DESCRIPTION

A program to prepare present traffic zone characteristics regarding population and GRDP.

INPUT DATA

1	POPULAT.PRN	:	Population Projection Data by Municipality
2	GRDP-ALL.DAT	:	GRDP Projection Data by Municipality
3	ZONECODE.DAT	:	Traffic Zone Data shows traffic zone number
4	PART.DAT	:	Traffic Zone Partition File containing zone number to be divided and shared with other traffic nodes.

OUTPUT DATA

1	ZONE.DAT	:	Present traffic zone characteristics regarding population and GRDP

PROCESS FLOW

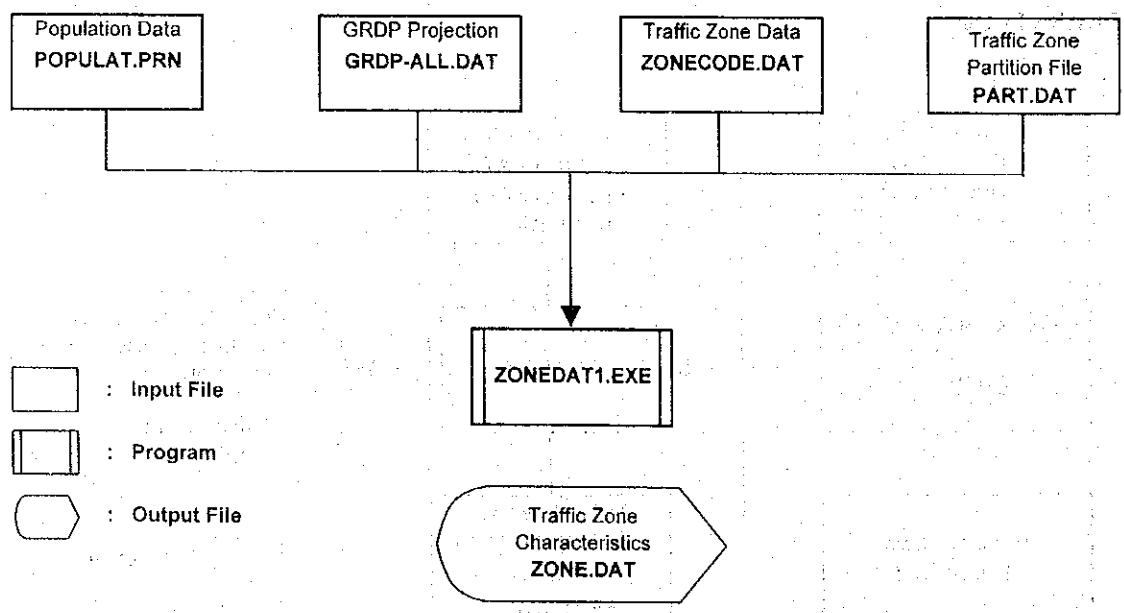

PROGRAM NAME : **ZONEDAT2.EXE**

DESCRIPTION

A program to determine present traffic zone characteristics regarding generation and attraction of traffic and road condition factor and update ZONE.DAT made by ZONEDAT1.EXE.

INPUT DATA

1 : ZONE.DAT : Zone characteristics data made by ZONEDAT1.EXE

2 : *****NET.DAT : Network Data

3 : OD2.*** : Known and Unknown OD Data

OUTPUT DATA

1 : ZONE.DAT : Updated ZONE.DAT

Zone characteristics regarding generation and attraction of traffic and road condition factor are added to ZONE.DAT made by ZONEDAT1.EXE.

PROCESS FLOW

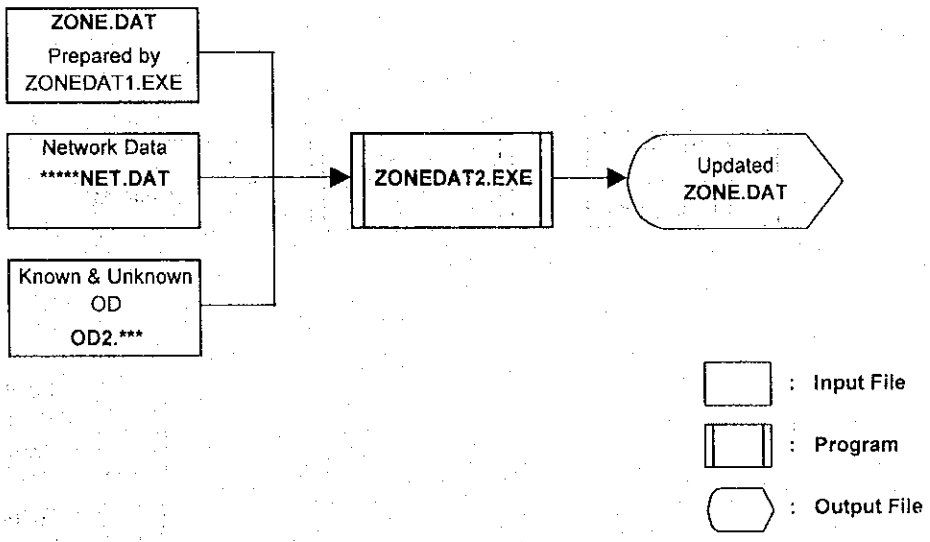

PROGRAM NAME : **ZONEDAT3.EXE**

DESCRIPTION

A program to determine present traffic zone characteristics regarding per capita GRDP, trip rate and attraction per person and update ZONE.DAT made by ZONEDAT2.EXE.

INPUT DATA

1 : ZONE.DAT : Zone characteristics data updated by ZONEDAT2.EXE

OUTPUT DATA

1 : ZONE.DAT : Updated ZONE.DAT

Zone characteristics regarding per capita GRDP, trip rate and traffic attraction per person are added to ZONE.DAT made by ZONEDAT2.EXE.

PROCESS FLOW

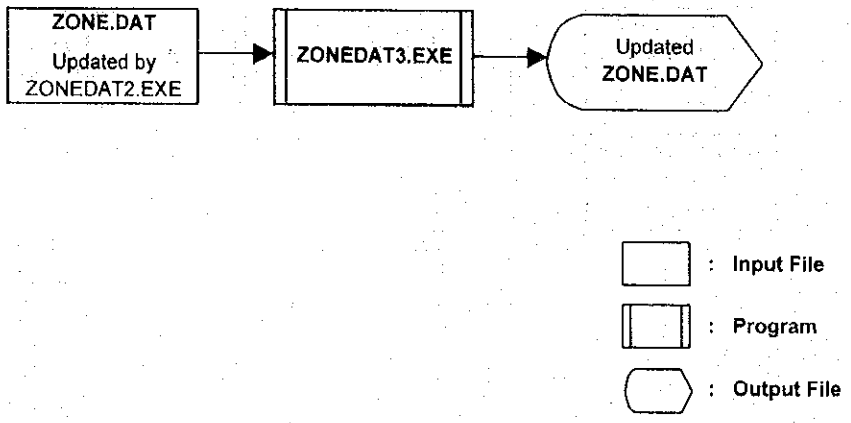

PROGRAM NAME : **AVELOAD.EXE**

DESCRIPTION

A program to compute average load of passengers and commodities by vehicle type of each OD Survey Station.

INPUT DATA

1 : COMCODE.DAT : Commodity Code Data

2 : STA***.TXT : OD Survey Data for Vehicle OD

OUTPUT DATA

1 : AVELOAD : Average Load of passengers and commodities by vehicle type.

PROCESS FLOW

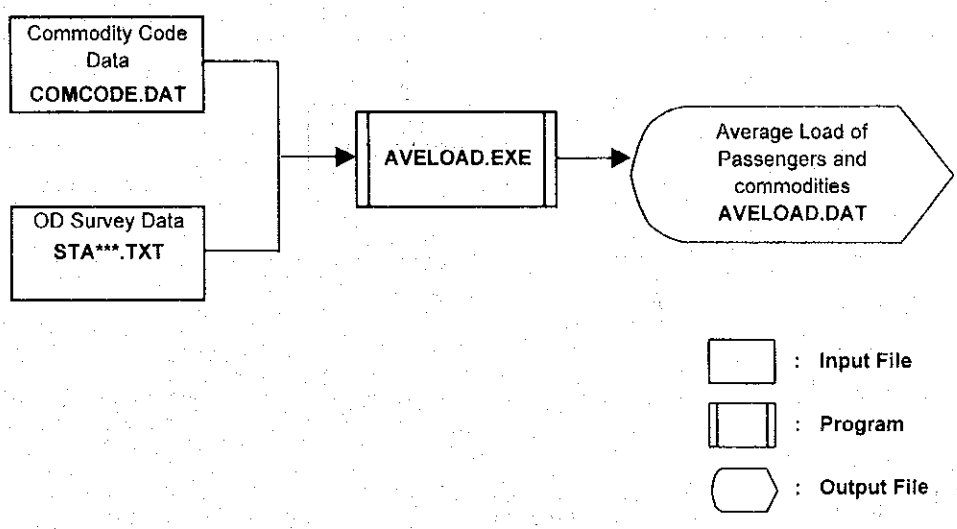

PROGRAM NAME : **FUTURE1.EXE**

DESCRIPTION

A program to prepare future vehicle, passenger, commodity OD tables based on present OD and future socio-economic data for Islands of Panay, Negros, Cebu, Samar, Leyte and Mindanao where OD survey was carried out.

INPUT DATA

1 :	ZONE.DAT	:	Present Traffic Zone Characteristics Data
2 :	FZONE.DAT	:	Future Traffic Zone Characteristics Data
3 :	ZONECODE.DAT	:	Traffic Zone Number and Municipality Code Number Data
4 :	PART.DAT	:	Traffic Zone Partition Data
5 :	AVELOAD.DAT	:	Average load of passengers and commodities by vehicle type
6 :	*****NET.DAT	:	Road Network Data
7 :	OD.***	:	Present Vehicle OD
8 :	OD2.***	:	Present Passenger and Commodity OD

OUTPUT DATA

9 :	MODELINF.***	:	Gravity Model Information
10 :	OD1997WO.***	:	1997 OD without case by Island
11 :	OD1997WT.***	:	1997 OD with case by Island
12 :	OD2004WO.***	:	2004 OD without case by Island
13 :	OD2004WT.***	:	2004 OD with case by Island
14 :	OD2010WO.***	:	2010 OD without case by Island
15 :	OD2010WT.***	:	2010 OD with case by Island
16 :	OD2016WO.***	:	2016 OD without case by Island
17 :	OD2016WT.***	:	2016 OD with case by Island

PROCESS FLOW

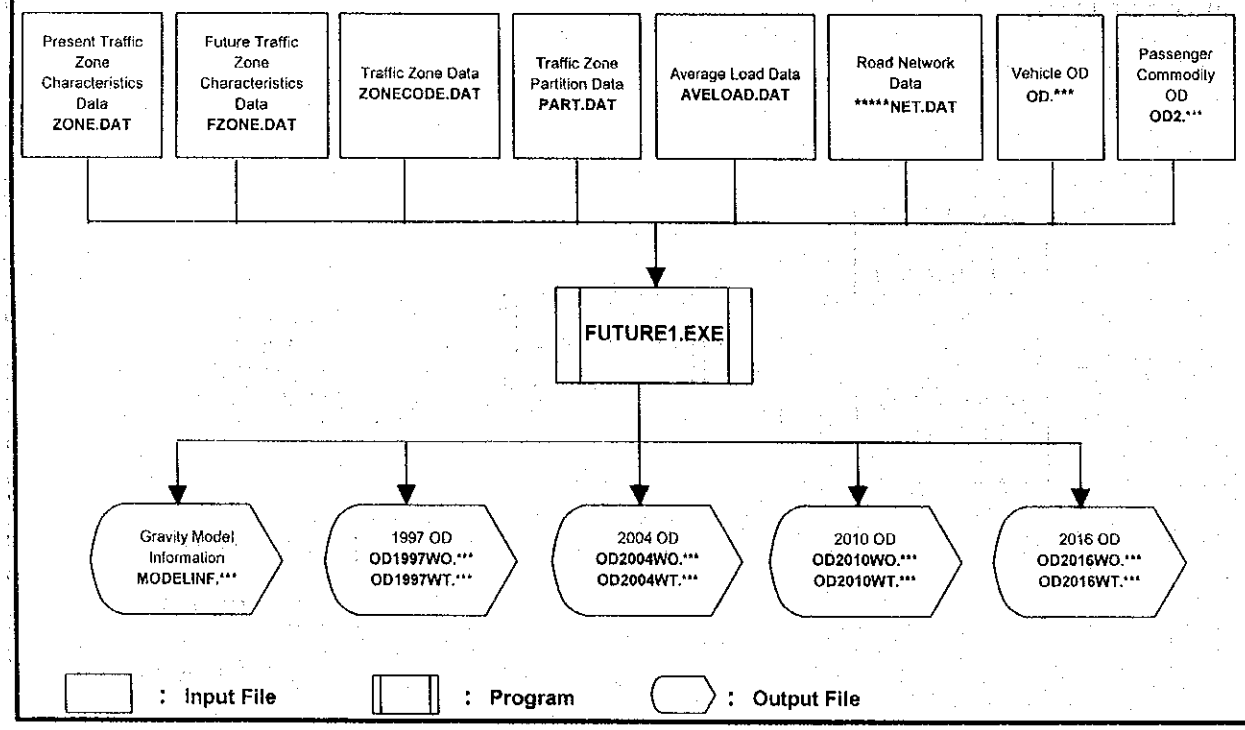

PROGRAM NAME : **FUTURE2.EXE**

DESCRIPTION

A program to prepare future vehicle OD tables based on present OD data and future socio-economic data for islands where OD Survey is not carried out.

INPUT DATA

1	ZONE.DAT	:	Present Traffic Zone Characteristics Data
2	FZONE.DAT	:	Future Traffic Zone Characteristics Data
3	ZONECODE.DAT	:	Traffic Zone Number and Municipality Code Number Data
4	PART.DAT	:	Traffic Zone Partition Data
5	AVELOAD.DAT	:	Average load of passengers and commodities by vehicle type
6	*****NET.DAT	:	Road Network Data
7	OD.***	:	Vehicle OD

OUTPUT DATA

1	MODELINF.***	:	Gravity Model Information
2	OD1997WO.***	:	1997 OD without case by Island
3	OD1997WT.***	:	1997 OD with case by Island
4	OD2004WO.***	:	2004 OD without case by Island
5	OD2004WT.***	:	2004 OD with case by Island
6	OD2010WO.***	:	2010 OD without case by Island
7	OD2010WT.***	:	2010 OD with case by Island
8	OD2016WO.***	:	2016 OD without case by Island
9	OD2016WT.***	:	2016 OD with case by Island

PROCESS FLOW

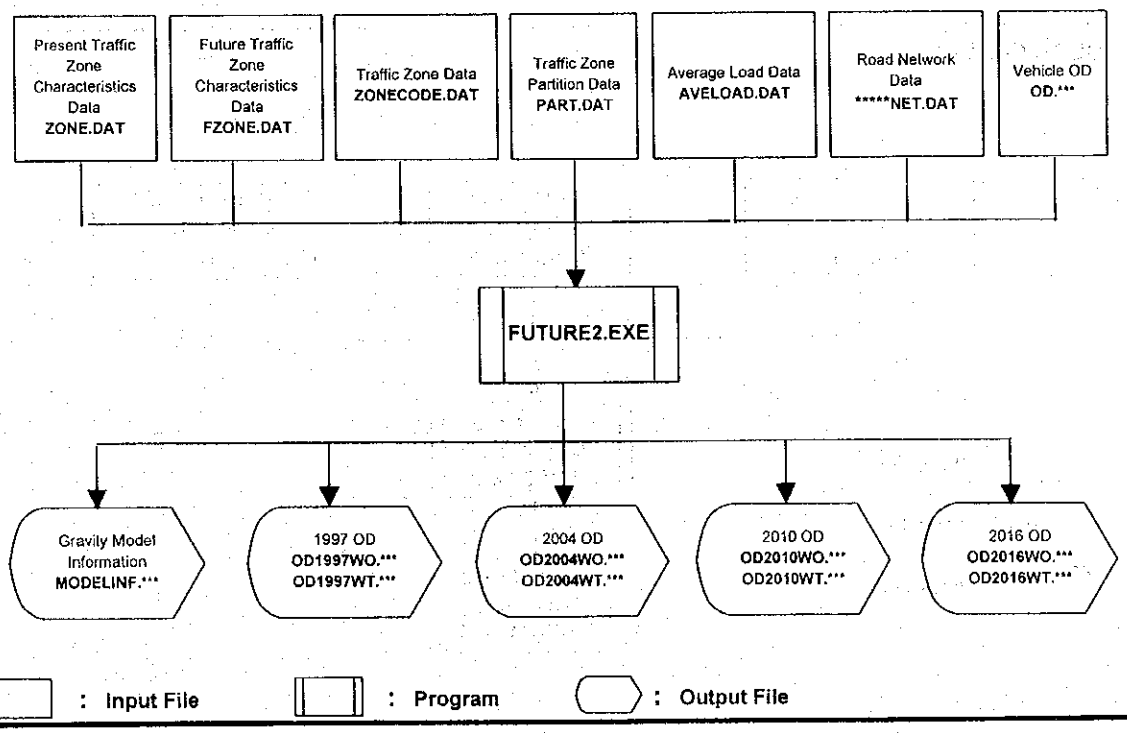

: Input File : Program : Output File

PROGRAM NAME : **GRAVITY.EXE**

DESCRIPTION

A program to compute Gravity Model Coefficients based on Known Ods constructed from OD surveys.

INPUT DATA

1 : ZONE.DAT : Present Traffic Zone Characteristics Data

2 : *****NET.DAT : Road Network Data

3 : OD2.*** : Passenger and Commodity OD

OUTPUT DATA

1 : GRAVITY.DAT : Gravity Model Coeficients

PROCESS FLOW

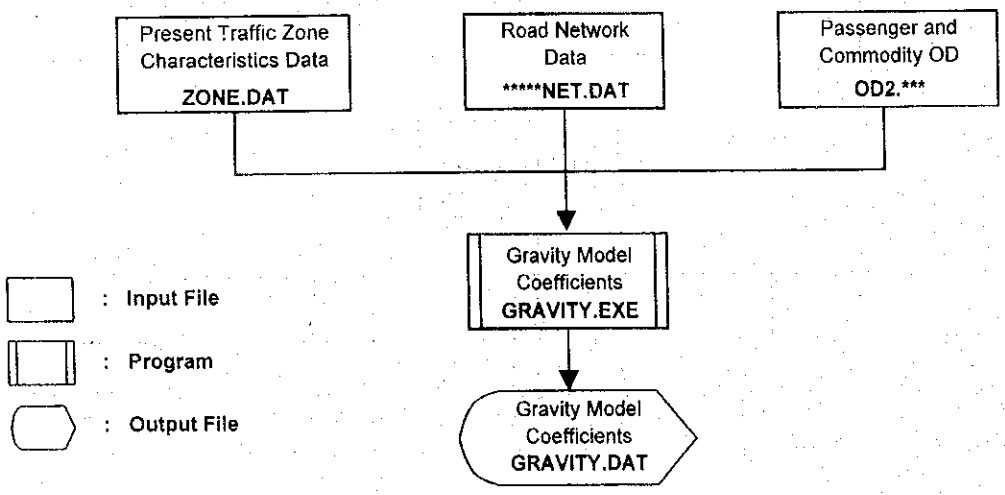

PROGRAM NAME : **ALLTRAF.EXE**

DESCRIPTION

A program to compute future traffic volume for with or without case using future OD Data.

INPUT DATA

1	ZONECODE.DAT	:	Traffic Zone Data
2	PART.DAT	:	Traffic Zone Partition Data
3	*****NET.DAT	:	Road Network Data
4	OD1997WO.***	:	1997 OD without case by Island
5	OD1997WT.***	:	1997 OD with case by Island
6	OD2004WO.***	:	2004 OD without case by Island
7	OD2004WT.***	:	2004 OD with case by Island
8	OD2010WO.***	:	2010 OD without case by Island
9	OD2010WT.***	:	2010 OD with case by Island
10	OD2016WO.***	:	2016 OD without case by Island
11	OD2016WT.***	:	2016 OD with case by Island

OUTPUT DATA

1	ALLTRAF.DAT	:	Future Traffic Volume
2	Warning (CON)	:	Warning Message

PROCESS FLOW

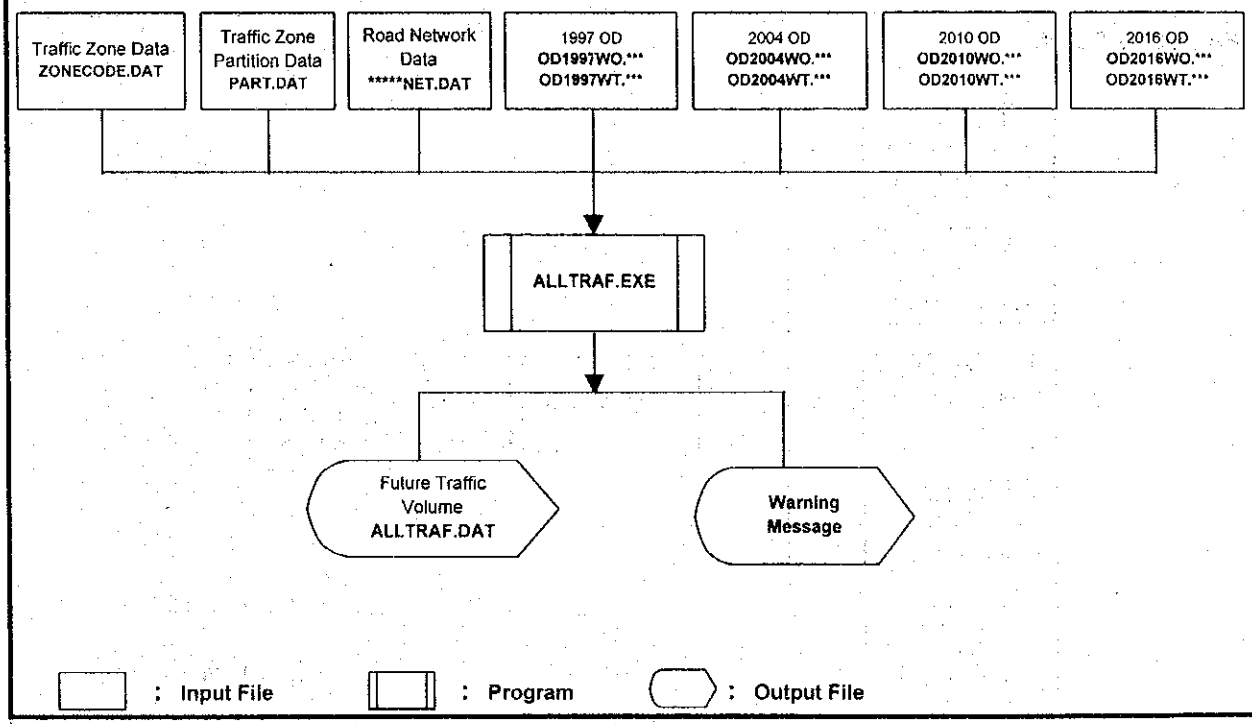

PROGRAM NAME : **FZONEDAT.EXE**

DESCRIPTION

A program to prepare future socio-economic data such as population and GRDP, and road condtition factor for With and Without Case of each traffic zone.

INPUT DATA

1	POPULAT.PRN	:	Population Projection Data by Municipality
2	GRDP-AN.DAT	:	GRDP Projection Data by Municipality
3	ZONECODE.DAT	:	Traffic Zone Data
4	PART.DAT	:	Traffic Zone Partition Data
5	*****NET.DAT	:	Road Network Data

OUTPUT DATA

1	FZONE.DAT	:	Population and GRDP Projection Data by Traffic Zone

PROCESS FLOW

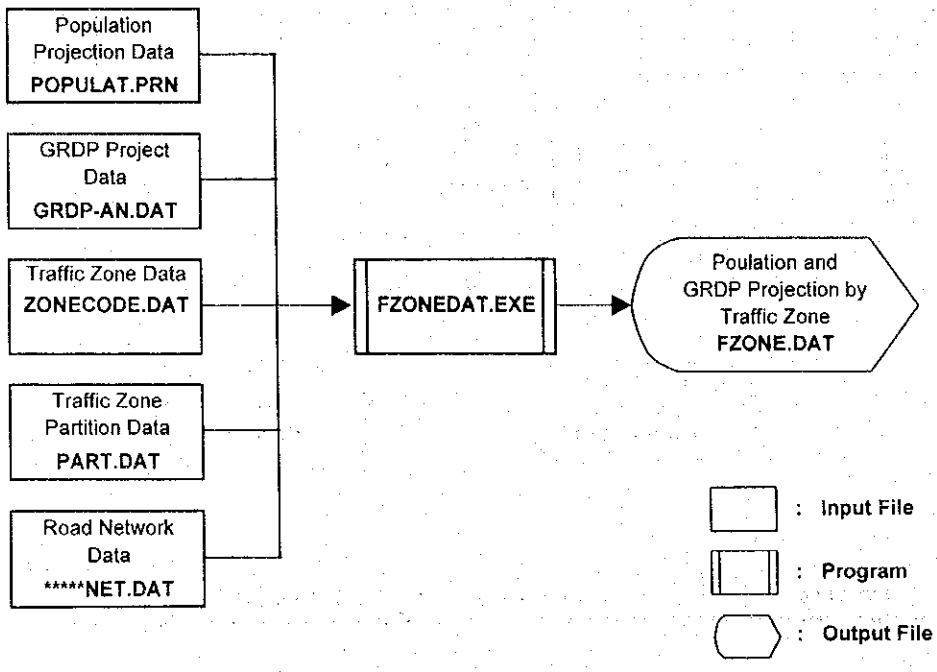

JICA

JI
LIBI