付　録

Appendix 3.7 NPC Wholesale rate formula

Charges and Adjustment

1. Basic Charges

   Demand charge: kW + Energy charge: kWh

2. Charge Adjustment Condition

   1) Cost Adjustment

      a) Fuel & Purchase Power Cost Adjustment (FPCA)

      b) Foreign exchange adjustment

   2) Other Adjustment Items

      a) Power Factor Adjustment (PFA)

      Power Factor less than 85%

      Power Factor 90% and above, 95% and below

      Power Factor 95% and above

$$PFA = \text{Total Basic Demand Charge} \times \frac{S.P.F.}{P.F.} - 1$$

The ratio $\frac{P.F.}{S.P.F.}$ shall be rounded to four(4) decimal places.

S.P.F.: Standard Power Factor: as adopted by NPC, 85% for penalty and 90% for bonus

P.F. : Actual Power Factor

$$P.F. = \frac{kWh^2}{\sqrt{(kWh)^2 + (kVARh)^2}} = \frac{1}{\sqrt{\frac{1 + (kVARh)^2}{(kWh)^2}}}$$

kVARh: kVARh figure is meter reading value in kWh meter for billing period

b) Fuel & Purchase power cost adjustment

$$FPCA = \Sigma \left[\frac{(P_1 - P_0)}{1{,}000{,}000} \times AHR \times Gf_1 \right] + (S_1 - S_0) \times G_s + (Pp_1 - Pp_0) \times GPp$$

Where:

P_1 : The actual price per million BTU of fuel, diesel, coal and other types of fuel used by NPC to generate electricity in the grid during the billing period.

P_0 : The base price per million BTU of fuel oil, diesel, coal and other types of fuel used by NPC in the design of the basic rate per grid.

AHR : The average heat rate of the plants in the grid using fuel, oil, diesel, coal and other types

of fuel in BTU per kWh established during the last rate review adjusted to account for transmission losses and company used pegged at 6%.

Gf_1 : share in the total kWh input to the grid of fuel oil, diesel, coal and other types of fuel used by NPC during the billing period.

$S_1 - S_0$: the change in cost of steam actually billed to NPC by independent power producers/generators in P/kWh during the billing period.

G_s : share in the total kWh input to the grid of purchased steam during the billing period.

$Pp_1 - Pp_0$: the charge in cost of purchased power actually billed to NPC by independent power producers or private generators in P/kWh less cost of fuel supplied/delivered by NPC during the billing period.

GPp : share in the total kWh input the grid of purchased power/energy during the billing period.

c) FOREX1+ FOREX2

$$A \quad FOREX\ 1 = \frac{(A_1-B_1) \times C + (A_2-B_2) \times D}{S},$$

$$A \quad FOREX\ 2 = \frac{(A_1-B_1) \times E + (A_2-B_2) \times F}{S},$$

A1: Simple average actual peso to US Dollar exchange rate of BSP for the billing period.

A2: Simple average actual peso to Japanese Yen exchange rate of BSP for the billing period.

B1: Base Peso to US Dollar exchange rate of P27.40/US$1 – equivalent exchange rate considered in NPC's latest rate application.

B2 :Base Peso to Japanese Yen exchange rate of P0.2329/JY1 – equivalent exchange rate considered in NPC's latest rate application.

C :Estimated debt service payments (principal only) for the period in US Dollar

D :Estimated debt service payments (principal only) for the period in Japanese Yen

E :Estimated foreign related operating expenses excluding those already recovered thru the FPCA for the period in US Dollar

F :Estimated foreign related operating expenses excluding those already recovered thru the FPCA for the period in Japanese Yen

S :Estimated energy sales for the year, kWh divided by 12

d) PVD: Primary Voltage Drop

Supply of Voltage	Discount(%)
less than 69 kV	-
69 kV and above	2.5
115/138 kV	3
230 kV and above	3.5

Appendix 3.9 Evaluation method for categorization

When NEA evaluate ECs' financial result in each fiscal year, NEA does it based upon the following manner shown in the Table A.3.9 Categorization in Region VIII, 1996. The assessment items are shown below;

1 Amortization Payment

Amortization payment is classified into major and incentive

(1) Major

	regular	with moratorium	restructured
Current to date	25pts.	23pts.	20pts.
Up to 1 qrt. overdue	20pts.	18pts.	15pts.
Up to 2 qrts. overdue	15pts.	12pts.	10pts.
Up to 3 qrts. overdue	8pts.	5pts.	0pts.
More than 3 qrts. overdue	0pts.	- 3pts.	-10pts.

(2) Incentive

As an incentive, ECs which are able to pay advanced amortization to NEA are given one(1) point for every quarter advanced payment but not to exceed five(5)n points.

2 System Loss

System Loss	score	System Loss	score
11% and below	25 pts.	19%	11 pts.
12	24	20	10
13	21	21	9
14	19	22	8
15	17	23	7
16	15	24	6
17	13	25	5
18	12	26 and above	0

3 Collection efficiency

Collection Eff.	score	Collection Eff.	score
95% and above	20 pts.	84%	9 pts.
94	19	83	8
93	18	82	7
92	17	81	6
91	16	80	5
90	15	79	4
89	14	78	3
88	13	77	2
87	12	76	1
86	11	75 and below	0
85	10		

4 Payment to Power Supplier

The ECs buy power from NAPOCOR which they retail in turn to their consumers. This is the biggest single expense that the coop has to promptly settle on time so as not to incur additional surcharges and other penalties and ultimately, disconnection.

	Regular		Relenting	
	without	with	without	with
Current	10 pts.	8 pts.	8 pts.	5 pts.
1 month overdue	8	5	5	0
2 month overdue	5	0	0	–5
3 month and more	0	–5	–5	–10

5 Non-Power Cost

In order to encourage the ECs to confine their non-power expenditures within the limits set by the NEA-approved budget in relation to actual collections, appropriate points are added from the over-all rating of ECs depending on how these expenditures match with the approved budget level.

Within approved budget	15 pts.
Above approved budget by 1%	14
2	13
3	12
4	11
5	10
6	9
7	8
8	7
9	6
10	5
11	4
12	3
13	2
14	1
15 & above	0

6 Demerit Points

(1) Cash Advances to Officers & Employees; one(1) point is deducted for every P 50,000

(2) No AB (No Approved Budget): - 1 pts.

(3) No CF (No Cash Flow) : - 1 pts.

(4) No SF for Rein.(Non Provision of Sinking Fund for 5% Reinvestment): - 1 pts.

7 Total

The general rule of rounding off figures will be followed except for cash advances.

Table A.3.9 Categorization in Region VIII, 1996

EC	Amortization Payment		System	Collection	payment	Non-	Demerit Points				1996	
	Major	Incentive	Loss	Efficiency	to PS	Power Cost	Cash ADV.	No AB	No CF	No SF for Rein.	Total Point	Category
DORELCO	C	Adv.3	22	91	C	Within	32	-	-	-		
	25	3	8	16	10	15	0	-	-	-	77	A
LEYECO II	C	Adv.4	18	97	C	Within	41	-	-	-		
	25	4	12	20	10	15	0	-	-	-	86	A
LEYECO III	7	-	17	99	C	-5	58	-	-	-		
	0	-	13	20	10	10	1	-	-	-	52	D
LEYECO IV	C	Adv.3	16	100	C	Within	43	-	-	-		
	25	3	15	20	10	15	0	-	-	-	88	A
LEYECO V	C	Adv.1	13	84	C	Within	82	-	-	-		
	25	1	22	9	10	15	1	-	-	-	81	A
SOLECO	C	-	19	94	C	Within	0	-	-	-		
	25	-	11	19	10	15	0	-	-	-	80	A
BILECO	R-C	-	22	96	C	Within	32	-	-	-		
	20	-	8	20	10	15	0	-	-	-	73	B
SAMELCO I	R1	-	10	98	C	-4	48	-	-	-		
	15	-	25	20	10	11	0	-	-	-	81	A
SAMELCO II	C	-	16	100	C	Within	32	-	-	-		
	25	-	15	20	10	15	0	-	-	-	85	A
NORSAMELCO	21	-	20	83	1	-1	48	-	-	-		
	0	-	10	8	8	14	0	-	-	-	40	D
ESAMELCO	11	-	17	98	C	Within	126	-	-	-		
	0	-	13	20	10	15	2	-	-	-	56	C

Source: NEA Head Quater office

: The report of JICA Preparatory & Preliminary Mission

Appendix 3.10 Power Demand Forecast in Reasion VIII prepared by NEA

- Base Sales Forecast; Demand forecast by existing customer in electrified Barangay
- Add-on Sales Forecast; Demand forecast by future customer in electrified Barangay
- Expansion Sales Forecast; Demand forecast by the future customer in the future electrified Barangay

REC NAME: DON ORESTES ROMUALDEZ ELECTRIC COOPERATIVE 07/29/97
REC Acronym: DORELCO 03:55 PM
REC Code: H01 Filename:H01L.WK1
YEAR OF FORECAST: 1997
1st Year of Historical Data (1992 or later year): 1992

HISTORICAL SYSTEM PERFORMANCE

	1992	1993	1994	1995	1996	1992-1996 Average %
RESIDENTIAL (MWh)	6542	7145	7992	8457	10093	11.4%
Customers	17960	18919	19681	18492	20730	3.7%
Avg kWh/month	30	31	34	38	41	7.5%
* Resid. Minimum Bill (MWh)	341	580	600	620	650	17.5%
Customers	4511	4660	5000	5400	5600	5.6%
Avg kWh/month	6	10	10	10	10	11.3%
* Other Resid. (MWh)	5670	5926	6653	7257	8751	11.5%
Customers	11569	11849	12250	12290	13258	3.5%
Avg kWh/month	41	42	45	49	55	7.7%
* BAPA (MWh)	531	639	739	550	692	6.8%
End-Use Customers	1880	2410	2431	802	1872	-0.1%
Avg kWh/month	24	22	25	60	31	7.0%
SMALL COMMERCIAL (MWh)	687	736	759	925	1125	13.1%
Customers	373	365	368	414	424	3.3%
Avg kWh/month	153	168	172	186	221	9.5%
LARGE COMMERCIAL (MWh)	-	-	-	-	-	NA
Customers	-	-	-	-	-	NA
Avg kWh/month	0	0	0	0	0	NA
INDUSTRIAL (MWh)	904	888	1140	781	1112	5.3%
Customers	1	1	1	2	3	31.6%
Avg kWh/month	75333	74000	95000	32542	30887	-20.0%
LARGE LOADS (MWh)	642	71	825	1008	61	-44.5%
Customers	1	1	1	1	1	0.0%
Avg kWh/month	53500	5917	68750	84000	5083	-44.5%
PUBLIC BUILDINGS (MWh)	144	156	198	220	234	12.9%
Customers	61	59	59	54	57	-1.7%
Avg kWh/month	197	220	280	340	342	14.8%
IRRIGATION (MWh)	-	-	-	-	-	NA
Customers	-	-	-	-	-	NA
Avg kWh/month	0	0	0	0	0	NA
STREET LIGHTS (MWh)	146	152	138	118	121	-4.5%
Installed Units (estimated)	497	496	468	390	435	-3.3%
Avg kWh/month	24	26	25	25	23	-1.3%
TOTAL SALES (MWh)	9065	9148	11052	11509	12745	8.9%
-REC INTERNAL USE (MWh)	50	52	57	36	95	17.3%
TOTAL CONSUMPTION (MWh)	9115	9200	11109	11545	12840	8.9%
ENERGY LOSSES (MWh)	2905	3681	3281	2695	3579	5.4%
ENERGY LOSSES (%)	24%	29%	23%	19%	22%	
ENERGY GEN/PURCHASED (MWh)	12020	12881	14390	14240	16419	8.1%
LOAD FACTOR (%)	34%	37%	41%	41%	47%	
MAXIMUM DEMAND (MW)	4	4	4	4	4	0.0%

SYSTEM SALES FORECAST	1996	1997	1998	1999	2000	2001	2002	2003	2004	2005	2006	2007
RESIDENTIAL (MWh)	10093	11309	12799	14505	17668	21055	24560	29523	34918	41227	48629	57231
Customers	20730	21559	22443	23332	24986	26514	27614	28666	29757	30892	32072	33300
Avg kWh/month	41	44	48	52	59	65	75	86	99	111	126	143
SMALL COMMERCIAL (MWh)	925	978	1054	1157	1293	1446	1650	1840	2077	2345	2648	2989
Customers	414	418	422	427	431	435	439	444	448	453	457	462
Avg kWh/month	186	195	208	226	250	277	309	345	386	432	482	539
LARGE COMMERCIAL (MWh)	0	0	0	0	0	0	0	0	0	0	0	0
Customers	0	0	0	0	0	0	0	0	0	0	0	0
Avg kWh/month	0	0	0	0	0	0	0	0	0	0	0	0
INDUSTRIAL (MWh)	781	804	827	844	861	878	896	914	932	951	970	989
Customers	2	2	2	2	2	2	2	2	2	2	2	2
Avg kWh/month	32542	33160	33790	34465	35155	35858	36581	37317	38067	38835	39617	40414
LARGE LOADS (MWh)	1008	1388	1967	1976	1986	1996	2006	2006	2006	2006	2006	2006
PUBLIC BUILDINGS (MWh)	220	234	250	269	259	310	337	369	405	444	487	535
Customers	54	56	57	59	61	63	64	66	68	70	73	75
Avg kWh/month	340	350	364	380	396	413	435	463	493	525	560	596
IRRIGATION (MWh)	0	0	0	0	0	0	0	0	0	0	0	0
Customers	0	0	0	0	0	0	0	0	0	0	0	0
Avg kWh/month	0	0	0	0	0	0	0	0	0	0	0	0
STREET LIGHTS (MWh)	118	122	127	140	152	169	181	191	202	213	226	239
Installed Units	390	394	399	423	443	475	483	487	492	496	500	504
Avg kWh/month	25	26	27	28	29	30	31	33	34	36	38	39
TOTAL SALES (MWh)	13145	14835	17025	19290	22249	25865	30010	34849	40539	47187	54965	64029
REC INTERNAL USE (MWh)	36	45	46	47	48	49	50	51	52	53	54	55
TOTAL CONSUMPTION (MWh)	13545	14880	17071	19337	22297	25914	30060	34900	40591	47240	55019	64084
ENERGY LOSSES (%)	19	22.0%	21.0%	20.0%	18.0%	17.0%	17.0%	16.0%	16.0%	14.0%	14.0%	14.0%
ENERGY GEN/PURCHASED (MWh)	14240	19077	21608	24172	27191	31222	36216	41548	48323	54930	63976	74517
LOAD FACTOR (%)	41%	49.0%	49.0%	50.0%	50.0%	50.0%	51.0%	51.0%	52.0%	52.0%	53.0%	53.0%
MAXIMUM DEMAND (MW)	4.0	4.4	5.0	5.5	6.2	7.1	8.1	9.3	10.6	12.1	13.8	16.0
Annual growth rate %		11.1%	13.3%	9.6%	12.5%	14.6%	13.7%	14.7%	14.1%	13.7%	14.3%	16.5%

REC NAME	LEVIE II ELECTRIC COOPERATIVE	07/30/93
REC Acronym	LEVECO II	08:30 PM
REC Code	H02	Filename:H02C.WK1
YEAR OF FORECAST	1997	
1st Year of Historical Data (1992 or later year)	1992	

HISTORICAL SYSTEM PERFORMANCE 1992-1996

	1992	1993	1994	1995	1996	Average %
RESIDENTIAL (MWh)	83159	95187	107276	119358	125839	14.9%
Customers	17759	18579	19018	20092	22453	6.1%
Avg kWh/month	65	69	73	73	88	8.2%
* Resid. Minimum Bill (MWh)	240	234	216	144	216	-3.4%
Customers	2225	1949	1792	1197	1797	-5.2%
Avg kWh/month	9	10	10	10	10	1.9%
* Other Resid. (MWh)	13459	14917	16986	18096	25436	14.9%
Customers	15496	16412	18003	19075	20634	7.4%
Avg kWh/month	72	74	79	79	95	6.9%
* RAPA (MWh)	52	66	68	108	187	37.7%
End-Use Customers	18	18	18	20	21	3.9%
Avg kWh/month	241	306	315	450	742	32.5%
SMALL COMMERCIAL (MWh)	99	95	85	80	100	0.3%
Customers	443	356	353	330	342	-6.5%
Avg kWh/month	18	20	20	20	-24	2.3%
LARGE COMMERCIAL (MWh)	10465	10761	11636	11124	10359	2.3%
Customers	3107	3131	3178	3190	3690	0.3%
Avg kWh/month	281	283	305	303	296	1.3%
INDUSTRIAL (MWh)	13187	14597	16586	17856	21330	12.8%
Customers	250	250	276	318	363	9.8%
Avg kWh/month	4396	4799	5008	4579	4897	2.7%
LARGE LOADS (MWh)	-	-	-	-	-	NA
Customers	-	-	-	-	-	NA
Avg kWh/month	0	0	0	0	0	NA
PUBLIC BUILDINGS (MWh)	192	137	160	126	229	19.6%
Customers	31	35	38	43	48	21.3%
Avg kWh/month	303	326	350	223	201	-1.2%
IRRIGATION (MWh)	-	-	-	-	-	NA
Customers	-	-	-	-	-	NA
Avg kWh/month	0	0	0	0	0	NA
STREET LIGHTS (MWh)	1150	1072	1425	1015	1442	0.2%
Installed Watts (estimated)	4056	4052	5350	5509	5500	7.5%
Avg kWh/month	25	22	22	20	25	0.3%
TOTAL SALES (MWh)	38020	42678	47874	49829	58499	10.8%
REC INTERNAL USE (MWh)	157	215	216	495	184	4.0%
TOTAL CONSUMPTION (MWh)	38177	41893	47390	50022	58683	10.8%
ENERGY LOSSES (MWh)	10161	12268	15153	18563	18726	0.8%
ENERGY LOSSES (%)	32%	28%	29%	29%	24%	
ENERGY SEN/PURCHASED (MWh)	56245	61046	66553	66487	77459	8.3%

LOAD FACTOR (%)	58%	54%	54%	54%	63%	
MAXIMUM DEMAND (MW)	11	13	14	14	14	6.2%

SYSTEM SALES FORECAST	1996	1997	1998	1999	2000	2001	2002	2003	2004	2005	2006	2007
RESIDENTIAL (MWh)	23839	26150	28954	32144	36105	40933	47200	54822	64068	75058	88504	103650
Customers	22452	23311	25518	27360	29304	31383	33916	36449	39597	42778	46218	49942
Avg kWh/month	88	91	95	98	103	109	116	125	135	145	160	173
SMALL COMMERCIAL (MWh)	300	311	325	342	359	378	399	424	450	479	511	546
Customers	342	345	358	369	377	386	394	402	411	419	427	436
Avg kWh/month	24	27	29	32	35	38	42	46	51	55	61	66
LARGE COMMERCIAL (MWh)	11359	12038	12880	14073	15596	17326	19248	21565	24207	27400	31017	35112
Customers	3498	3262	3327	3458	3599	3743	3892	4049	4210	4378	4554	4736
Avg kWh/month	296	308	323	341	361	385	412	444	479	522	568	618
INDUSTRIAL (MWh)	21330	23559	26035	28067	32448	36458	40952	46024	51714	58135	65367	73513
Customers	363	403	442	496	551	612	679	754	837	929	1031	1144
Avg kWh/month	4897	4872	4851	4879	4910	4947	5024	5068	5152	5217	5285	5355
LARGE LOADS (MWh)	0	0	35040	35590	35744	36302	36463	36463	36463	36463	36463	36463
PUBLIC BUILDINGS (MWh)	229	236	243	250	258	267	276	286	296	306	317	328
Customers	68	69	69	70	71	71	72	73	74	74	75	76
Avg kWh/month	281	286	292	298	304	311	319	327	335	343	352	360
IRRIGATION (MWh)	0	0	0	0	0	0	0	0	0	0	0	0
Customers	0	0	0	0	0	0	0	0	0	0	0	0
Avg kWh/month	0	0	0	0	0	0	0	0	0	0	0	0
STREET LIGHTS (MWh)	1642	1824	2058	2320	2615	2942	3308	3848	4396	5022	5736	6553
Installed Units	5500	6050	6723	7470	8295	9210	10316	11556	12943	14496	16235	18188
Avg kWh/month	25	25	26	26	26	27	27	28	28	29	29	30
TOTAL SALES (MWh)	58459	63958	105535	113507	122945	134281	147207	163191	184394	202663	228116	256165
REC INTERNAL USE (MWh)	184	193	193	193	193	193	193	193	193	193	193	193
TOTAL CONSUMPTION (MWh)	58643	64151	105726	113700	123138	134474	147399	163384	184587	202856	228309	256358
ENERGY LOSSES (%)	24.2%	20.0%	18.0%	16.0%	15.0%	14.0%	12.0%	10.0%	10.0%	10.0%	10.0%	10.0%
ENERGY GEN/PURCHASED (MWh)	77455	80189	128690	135357	144468	156283	166068	181649	203263	225396	253676	284842
LOAD FACTOR (%)	63%	61.0%	60.0%	60.0%	60.0%	60.0%	60.0%	60.0%	60.0%	60.0%	60.0%	60.0%
MAXIMUM DEMAND (MW)	14.0	15.0	24.5	25.8	27.6	29.7	32.0	34.6	36.4	42.9	49.3	54.2
Annual growth rate %	2.1%	7.2%	63.2%	5.2%	7.0%	7.9%	7.5%	8.1%	11.1%	11.7%	12.5%	12.3%

REC NAME: LEVIE III ELECTRIC COOPERATIVE, INC. 03/30/97
REC Acronym: LEVECO III 01:07 PM
REC Code: K03 Filename:K03L.WK1
YEAR OF FORECAST: 1997
1st Year of Historical Data (1992 or later year): 1992

HISTORICAL SYSTEM PERFORMANCE

	1992	1993	1994	1995	1996	1992-1996 Average
RESIDENTIAL (MWh)	3486	3831	4422	4510	5656	12.9%
Customers	10837	11218	11713	11943	12303	3.2%
Avg kWh/month	27	28	31	31	38	8.3%
* Resid. Kinlaw Bill (MWh)	250	260	270	255	170	-9.2%
Customers	2165	2235	2272	2228	1399	-10.3%
Avg kWh/month	10	10	10	10	10	1.3%
* Other Resid. (MWh)	2824	3095	3595	3874	4706	13.6%
Customers	6857	7023	7351	7713	8751	6.3%
Avg kWh/month	34	36	41	40	45	6.9%
* EAPA (MWh)	412	476	557	581	780	17.3%
End-Use Customers	1810	1912	2090	2024	2153	4.4%
Avg kWh/month	19	21	22	23	30	12.3%
SMALL COMMERCIAL (MWh)	359	435	515	515	643	15.3%
Customers	358	399	416	446	457	4.2%
Avg kWh/month	77	91	104	95	117	11.0%
LARGE COMMERCIAL (MWh)	-	-	-	-	-	NA
Customers	-	-	-	-	-	NA
Avg kWh/month	0	0	0	0	0	NA
INDUSTRIAL (MWh)	327	329	280	222	414	6.1%
Customers	63	63	56	56	57	-2.5%
Avg kWh/month	435	435	417	330	605	8.0%
LARGE LOADS (MWh)	-	-	-	-	-	NA
Customers	-	-	-	-	-	NA
Avg kWh/month	0	0	0	0	0	NA
PUBLIC BUILDINGS (MWh)	98	136	160	175	221	22.5%
Customers	124	136	154	155	177	9.3%
Avg kWh/month	65	83	87	87	104	12.1%
IRRIGATION (MWh)	-	-	-	-	-	NA
Customers	-	-	-	-	-	NA
Avg kWh/month	0	0	0	0	0	NA
STREET LIGHTS (MWh)	131	136	153	159	248	17.3%
Installed Units (estimated)	509	549	612	640	680	8.0%
Avg kWh/month	22	21	21	21	30	8.6%
TOTAL SALES (MWh)	4401	4967	5550	5519	7182	13.0%
REC INTERNAL USE (MWh)	11	13	14	19	20	16.1%
TOTAL CONSUMPTION (MWh)	4412	4980	5564	5597	7202	13.0%
ENERGY LOSSES (MWh)	1531	1591	1609	1863	1575	0.3%
ENERGY LOSSES (%)	26%	25%	22%	25%	18%	
ENERGY GEN/PURCHASED (MWh)	5943	6571	7153	7460	8777	10.2%
LOAD FACTOR (%)	34%	37%	41%	43%	50%	
MAXIMUM DEMAND (MW)	2	2	2	2	2	0.0%

SYSTEM SALES FORECAST	1996	1997	1998	1999	2000	2001	2002	2003	2004	2005	2006	2007
RESIDENTIAL (MWh)	5656	6570	7576	8825	10245	11565	13978	16129	18546	21277	24375	27974
Customers	12305	13041	13949	15026	16278	17523	18573	19727	20832	22072	23389	24661
Avg kWh/month	38	42	45	49	53	56	63	68	74	80	87	95
SMALL COMMERCIAL (MWh)	643	699	760	826	898	976	1062	1155	1255	1366	1486	1617
Customers	457	462	466	471	476	480	485	490	495	500	505	510
Avg kWh/month	117	126	136	146	157	169	182	196	212	228	245	264
LARGE COMMERCIAL (MWh)	0	0	0	0	0	0	0	0	0	0	0	0
Customers	0	0	0	0	0	0	0	0	0	0	0	0
Avg kWh/month	0	0	0	0	0	0	0	0	0	0	0	0
INDUSTRIAL (MWh)	414	449	488	529	575	624	677	735	798	866	941	1021
Customers	57	58	58	59	59	60	61	61	62	62	63	64
Avg kWh/month	605	650	699	751	807	868	933	1002	1077	1158	1245	1338
LARGE LOADS (MWh)	0	0	0	0	0	0	0	0	0	0	0	0
PUBLIC BUILDINGS (MWh)	221	235	250	265	282	299	318	338	360	382	406	432
Customers	177	180	182	185	188	191	194	196	199	202	205	208
Avg kWh/month	104	109	114	119	125	131	137	144	150	157	165	173
IRRIGATION (MWh)	0	0	0	0	0	0	0	0	0	0	0	0
Customers	0	0	0	0	0	0	0	0	0	0	0	0
Avg kWh/month	0	0	0	0	0	0	0	0	0	0	0	0
STREET LIGHTS (MWh)	248	265	281	327	365	409	457	495	531	556	602	640
Installed Units	630	694	728	784	835	884	953	986	1009	1027	1043	1060
Avg kWh/month	30	32	33	35	36	38	40	42	44	46	48	50
TOTAL SALES (MWh)	7182	8168	9364	10773	12385	14273	16492	19353	22491	26458	27830	31681
REC INTERNAL USE (MWh)	20	21	22	22	23	23	24	24	24	25	25	26
TOTAL CONSUMPTION (MWh)	7202	8189	9386	10795	12408	14296	16516	19377	22515	26483	27855	31707
ENERGY LOSSES (%)	17.9%	16.0%	16.0%	13.0%	13.0%	13.0%	13.0%	12.0%	12.0%	12.0%	12.0%	12.0%
ENERGY GEN/PURCHASED (MWh)	8777	9749	10914	12408	14262	16443	18984	21451	24449	27872	31654	35031
LOAD FACTOR (%)	50%	45.0%	45.0%	47.0%	47.0%	47.0%	50.0%	50.0%	50.0%	50.0%	50.0%	50.0%
MAXIMUM DEMAND (MW)	2.0	2.5	2.8	3.0	3.5	4.0	4.3	4.9	5.6	6.4	7.2	8.2
Annual growth rate %		23.2%	12.0%	8.9%	16.9%	15.2%	8.6%	13.0%	14.0%	13.0%	13.0%	13.0%

REC NAME: LEYTE IV ELECTRIC COOPERATIVE, INC. — 07/29/97
REC Acronym: LEYECO IV — 02:39 PM
REC Code: H04 — filename:H04L.WK1
YEAR OF FORECAST: 1997
1st Year of Historical Data (1992 or later year): 1992

HISTORICAL SYSTEM PERFORMANCE

	1992	1993	1994	1995	1996	1992-1996 Average %
RESIDENTIAL (MWh)	3865	4581	5251	6058	7621	18.5%
Customers	12268	13518	15441	16253	18944	11.4%
Avg kWh/month	26	28	28	31	34	6.3%
* Resid. Minimum Bill (MWh)	222	261	383	375	312	8.9%
Customers	3130	3439	3509	4827	3714	4.4%
Avg kWh/month	6	6	8	6	7	4.5%
* Other Resid. (MWh)	3475	4094	4571	5468	7018	19.2%
Customers	8461	9298	10468	10443	14265	14.0%
Avg kWh/month	34	37	36	44	41	4.6%
* SAPA (MWh)	169	226	297	257	291	14.5%
Enc-Use Customers	697	881	1064	973	962	8.4%
Avg kWh/month	20	21	23	22	25	5.7%
SMALL COMMERCIAL (MWh)	1615	1782	1939	2173	2539	12.0%
Customers	2140	2142	2160	2190	2302	1.8%
Avg kWh/month	63	69	74	83	92	9.9%
LARGE COMMERCIAL (MWh)	-	-	-	-	-	NA
Customers	-	-	-	-	-	NA
Avg kWh/month	0	0	0	0	0	NA
INDUSTRIAL (MWh)	388	462	535	371	390	-0.5%
Customers	135	142	158	152	166	5.3%
Avg kWh/month	239	271	282	203	191	-5.5%
LARGE LOADS (MWh)	1705	1609	1617	1561	1536	-2.6%
Customers	1	1	1	1	1	0.0%
Avg kWh/month	142065	134085	134750	130093	127978	-2.6%
PUBLIC BUILDINGS (MWh)	355	396	424	503	628	15.5%
Customers	327	367	424	452	552	14.0%
Avg kWh/month	90	90	83	93	95	1.3%
IRRIGATION (MWh)	-	-	-	-	-	NA
Customers	-	-	-	-	-	NA
Avg kWh/month	0	0	0	0	0	NA
STREET LIGHTS (MWh)	136	133	114	120	110	-5.1%
Installed Units (estimated)	701	858	770	741	733	1.1%
Avg kWh/month	16	13	12	13	13	-6.2%
TOTAL SALES (MWh)	8063	8964	9880	10826	12813	12.3%
REC INTERNAL USE (MWh)	32	67	63	73	77	24.3%
TOTAL CONSUMPTION (MWh)	8095	9031	9943	10899	12890	12.3%
ENERGY LOSSES (MWh)	1778	1819	1639	2566	2608	10.0%
ENERGY LOSSES (%)	18%	17%	14%	19%	17%	-1.7%
ENERGY GEN/PURCHASED (MWh)	9873	10850	11582	13485	15498	11.5%
LOAD FACTOR (%)	44%	44%	40%	47%	49%	2.6%
MAXIMUM DEMAND (MW)	3	3	3	3	4	9.1%

SYSTEM SALES FORECAST	1996	1997	1998	1999	2000	2001	2002	2003	2004	2005	2006	2007
RESIDENTIAL (MWh)	7621	7963	8405	8891	9450	10047	10703	11391	12104	12843	13623	14443
Customers	18944	20176	21601	22958	24346	25655	26828	27880	28838	29568	30416	31270
Avg kWh/month	34	33	32	32	32	33	33	34	35	36	37	38
SMALL COMMERCIAL (MWh)	2539	2732	2963	3213	3499	3816	4151	4555	4947	5398	5587	6120
Customers	2302	2371	2473	2550	2655	2746	2850	2912	2997	3095	3175	3268
Avg kWh/month	92	96	100	105	110	116	123	130	138	146	155	164
LARGE COMMERCIAL (MWh)	0	0	0	0	0	0	0	0	0	0	0	0
Customers	0	0	0	0	0	0	0	0	0	0	0	0
Avg kWh/month	0	0	0	0	0	0	0	0	0	0	0	0
INDUSTRIAL (MWh)	380	410	444	482	525	573	626	687	754	831	914	1007
Customers	166	181	197	215	234	255	278	303	331	361	393	428
Avg kWh/month	191	189	188	187	187	187	187	189	190	192	194	196
LARGE LOADS (MWh)	1609	1609	1617	1625	1633	1641	1650	1658	1666	1675	1683	1691
PUBLIC BUILDINGS (MWh)	417	467	529	601	686	786	898	1026	1177	1355	1564	1809
Customers	367	433	512	602	700	811	930	1060	1207	1371	1554	1760
Avg kWh/month	95	90	86	83	82	81	80	81	81	82	84	86
IRRIGATION (MWh)	0	0	0	0	0	0	0	0	0	0	0	0
Customers	0	0	0	0	0	0	0	0	0	0	0	0
Avg kWh/month	0	0	0	0	0	0	0	0	0	0	0	0
STREET LIGHTS (MWh)	129	129	135	140	145	150	155	158	160	160	161	161
Installed Units	858	862	897	929	965	1001	1029	1051	1052	1067	1071	1075
Avg kWh/month	13	13	13	13	13	13	13	13	13	13	13	13
TOTAL SALES (MWh)	12695	13311	14093	14952	15918	17014	18193	19455	20808	22262	23832	25532
REC INTERNAL USE (MWh)	77	68	69	70	71	72	73	74	75	76	77	78
TOTAL CONSUMPTION (MWh)	12850	13379	14162	15022	15989	17086	18266	19529	20883	22338	23909	25610
ENERGY LOSSES (%)	16.8%	16.0%	15.0%	14.0%	13.0%	13.0%	13.0%	13.0%	13.0%	13.0%	13.0%	13.0%
ENERGY GEN/PURCHASED (MWh)	15498	15927	16661	17467	18378	19639	20995	22447	24004	25676	27482	29436
LOAD FACTOR (%)	49%	45.0%	46.0%	47.0%	50.0%	50.0%	50.0%	50.0%	50.0%	50.0%	50.0%	50.0%
MAXIMUM DEMAND (MW)	3.6	4.0	4.1	4.2	4.2	4.5	4.8	5.1	5.5	5.9	6.3	6.7
Annual growth rate %		12.2%	2.3%	2.6%	-1.1%	6.9%	6.9%	6.9%	6.9%	7.0%	7.0%	7.1%

REC NAME — LEWIS W ELECTRIC COOPERATIVE, INC. — 07/30/97
REC Acronym — LEWECO V — 03:03 PM
REC Code — N05 — Filename:N05C.WK4
YEAR OF FORECAST — 1997
1st Year of Historical Data (1992 or later year) — 1992

HISTORICAL SYSTEM PERFORMANCE

	1992	1993	1994	1995	1996	1992-1996 Average %
RESIDENTIAL (MWh)	14040	16932	18312	20603	25529	15.0%
Customers	24456	27147	29325	32302	35568	8.2%
Avg kWh/month	48	49	51	53	63	7.1%
• Resid. Minimum Bill (MWh)	726	804	936	1031	1300	15.7%
Customers	6050	6700	7328	7959	8309	7.6%
Avg kWh/month	10	10	10	11	13	7.5%
• Other Resid. (MWh)	13493	16394	16399	18404	23552	15.0%
Customers	17461	17446	19303	20964	21872	5.5%
Avg kWh/month	59	65	71	73	86	9.9%
• BPA (MWh)	817	614	993	1169	1477	16.0%
End-Use Customers	745	2023	3594	3379	5596	48.2%
Avg kWh/month	91	24	24	29	34	-21.8%
SMALL COMMERCIAL (MWh)	-	-	-	-	-	NA
Customers	-	-	-	-	-	NA
Avg kWh/month	0	0	0	0	0	NA
LARGE COMMERCIAL (MWh)	2189	2452	2656	2956	3122	9.4%
Customers	934	1037	1074	1104	988	0.1%
Avg kWh/month	185	198	208	222	264	9.2%
INDUSTRIAL (MWh)	13933	14895	15274	17468	14978	1.8%
Customers	269	289	352	399	581	20.2%
Avg kWh/month	4316	4295	3614	3648	2225	-15.3%
LARGE LOADS (MWh)	-	-	-	-	-	NA
Customers	-	-	-	-	-	NA
Avg kWh/month	0	0	0	0	0	NA
PUBLIC BUILDINGS (MWh)	474	509	635	695	747	12.0%
Customers	151	177	189	207	213	9.0%
Avg kWh/month	262	277	290	274	292	2.0%
IRRIGATION (MWh)	-	-	-	-	5431	NA
Customers	-	-	-	-	16	NA
Avg kWh/month	0	0	0	0	28286	NA
STREET LIGHTS (MWh)	298	446	670	980	1843	27.0%
Installed Units (estimated)	939	880	922	855	193	-33.2%
Avg kWh/month	61	63	453	521	796	90.2%
TOTAL SALES (MWh)	31342	34567	37617	42672	51455	13.2%
REC INTERNAL USE (MWh)	132	204	235	273	248	17.1%
TOTAL CONSUMPTION (MWh)	31474	34771	37852	42945	51703	13.2%
ENERGY LOSSES (MWh)	5815	5576	5058	7318	7839	7.7%
ENERGY LOSSES (%)	16%	14%	12%	15%	13%	
ENERGY GEN/PURCHASED (MWh)	37289	40349	42910	50263	59541	12.0%
LOAD FACTOR (%)	47%	51%	45%	52%	62%	
RATCHUN DEMAND (MW)	9	9	11	11	11	5.1%

SYSTEM SALES FORECAST	1996	1997	1998	1999	2000	2001	2002	2003	2004	2005	2006	2007
RESIDENTIAL (KWh)	25929	28363	31052	34135	41220	47327	54476	62720	72032	82675	94515	108085
Customers	33568	35851	38368	41391	44720	48600	52613	56588	60547	64651	69777	75384
Avg kWh/month	63	66	69	73	77	81	86	92	99	107	115	123
SMALL COMMERCIAL (KWh)	0	0	0	0	0	0	0	0	0	0	0	0
Customers	0	0	0	0	0	0	0	0	0	0	0	0
Avg kWh/month	0	0	0	0	0	0	0	0	0	0	0	0
LARGE COMMERCIAL (KWh)	3177	3225	3330	3444	3567	3659	3840	3991	4152	4324	4503	4691
Customers	988	997	1007	1017	1027	1037	1048	1058	1069	1079	1090	1101
Avg kWh/month	264	269	276	282	289	292	305	314	324	334	344	355
INDUSTRIAL (KWh)	14978	15545	16372	16925	17503	18209	18944	19706	20503	21329	22190	23085
Customers	561	578	595	613	631	650	670	690	711	732	754	777
Avg kWh/month	2225	2242	2264	2287	2310	2333	2357	2380	2406	2428	2453	2477
LARGE LOADS (KWh)	0	10309	12427	12569	12915	13166	13422	13422	13422	13422	13422	13422
PUBLIC BUILDINGS (KWh)	747	766	785	803	838	875	919	972	1026	1072	1125	1170
Customers	213	217	222	227	233	241	250	261	271	279	287	294
Avg kWh/month	292	294	295	297	299	302	306	311	316	321	327	332
IRRIGATION (KWh)	5431	5431	5431	5431	5431	5431	5431	5431	5431	5431	5431	5431
Customers	16	16	16	16	16	16	16	16	16	16	16	16
Avg kWh/month	28286	28286	28286	28286	28286	28286	28286	28286	28286	28286	28286	28286
STREET LIGHTS (KWh)	1843	1973	2164	2582	3117	3906	4874	5394	5765	6165	6455	6742
Installed Units	193	205	222	263	314	389	461	517	558	592	612	633
Avg kWh/month	796	804	812	820	828	836	845	853	862	870	879	889
TOTAL SALES (KWh)	51455	66118	72162	77875	84591	92613	101736	111538	122351	135444	147701	162623
REC INTERNAL USE (KWh)	248	257	265	273	281	290	298	307	316	325	335	335
TOTAL CONSUMPTION (KWh)	51703	66368	72427	78148	84872	92903	102004	111845	122667	134769	148036	162958
ENERGY LOSSES (%)	13.2%	12.0%	12.0%	12.0%	12.0%	12.0%	12.0%	12.0%	12.0%	12.0%	12.0%	12.0%
ENERGY SCH/PURCHASED (KWh)	59541	75418	82303	88804	96445	105571	115914	127096	139371	153246	168222	185139
LOAD FACTOR (%)	62%	62.0%	62.0%	62.0%	63.0%	63.0%	63.0%	64.0%	64.0%	65.0%	65.0%	65.0%
MAXIMUM DEMAND (MW)	11.0	13.9	15.2	16.4	17.5	19.1	21.0	22.7	24.9	26.9	29.5	32.5
Annual growth rate %		26.2%	9.1%	7.5%	6.9%	9.5%	9.8%	7.9%	9.7%	8.2%	9.8%	10.1%

REC NAME: SOUTHERN LEVEE ELECTRIC COOPERATIVE, INC. 03/30/93
REC Acronym: SOLECO 03:10 PM
REC Code: 806 Filename:MODEL.WK1
YEAR OF FORECAST: 1997
1st Year of Historical Data: 1992
(1992 or later year)

HISTORICAL SYSTEM PERFORMANCE

	1992	1993	1994	1995	1996	1992-1996 Average %
RESIDENTIAL (MWh)	6658	7099	6330	7991	10402	11.9%
Customers	18716	20096	21623	23158	24497	7.0%
Avg kWh/month	35	29	24	29	35	4.6%
* Resid. Winter Only (MWh)	610	755	831	679	559	-2.5%
Customers	5156	6276	6926	6920	6964	-0.9%
Avg kWh/month	10	10	10	8	9	-1.5%
* Other Resid. (MWh)	6020	6346	5499	7312	9843	13.1%
Customers	13560	13820	14695	16878	19533	9.4%
Avg kWh/month	37	38	31	38	42	3.2%
* DAPA (MWh)	-	-	-	-	-	NA
End-Use Customers	-	-	-	-	-	NA
Avg kWh/month	0	0	0	0	0	NA
SMALL COMMERCIAL (MWh)	1319	1485	1404	1623	1908	9.7%
Customers	494	540	542	556	649	7.0%
Avg kWh/month	222	229	217	227	245	2.5%
LARGE COMMERCIAL (MWh)	-	-	-	-	-	NA
Customers	-	-	-	-	-	NA
Avg kWh/month	0	0	0	0	0	NA
INDUSTRIAL (MWh)	136	36	259	356	346	26.3%
Customers	3	5	6	5	5	13.6%
Avg kWh/month	3778	633	3597	5933	5742	18.2%
LARGE LOADS (MWh)	-	-	-	-	-	NA
Customers	-	-	-	-	-	NA
Avg kWh/month	0	0	0	0	0	NA
PUBLIC BUILDINGS (MWh)	625	690	562	715	919	10.1%
Customers	450	501	573	670	752	13.7%
Avg kWh/month	114	115	85	89	102	-3.1%
IRRIGATION (MWh)	-	-	-	-	-	NA
Customers	-	-	-	-	-	NA
Avg kWh/month	0	0	0	0	0	NA
STREET LIGHTS (MWh)	97	105	81	84	100	0.0%
Installed Units (estimated)	172	186	250	178	46	-24.1%
Avg kWh/month	47	47	27	39	181	40.1%
TOTAL SALES (MWh)	8815	9417	8656	10769	13675	11.4%
REC INTERNAL USE (MWh)	26	32	39	82	91	3.4%
TOTAL CONSUMPTION (MWh)	8901	9494	8775	10851	13766	11.5%
ENERGY LOSSES (MWh)	2303	2358	1715	2580	3337	9.7%
ENERGY LOSSES (%)	21%	20%	16%	19%	20%	
ENERGY GEN/PURCHASED (MWh)	11204	11852	10490	13431	17103	11.2%
LOAD FACTOR (%)	43%	45%	50%	58%	49%	
MAXIMUM DEMAND (MW)	3	3	4	4	4	7.5%

SYSTEM SALES FORECAST	1996	1997	1998	1999	2000	2001	2002	2003	2004	2005	2006	2007
RESIDENTIAL (MWh)	10402	11119	11955	13007	14149	15519	16745	18161	19641	21169	22756	24436
Customers	24457	26457	28546	30599	33471	36305	39231	42042	44842	47593	50333	53151
Avg kWh/month	35	35	35	35	35	35	36	35	36	37	38	38
SMALL COMMERCIAL (MWh)	1908	2079	2292	2526	2788	3074	3399	3739	4123	4546	5014	5529
Customers	649	681	716	751	789	828	870	913	959	1007	1057	1110
Avg kWh/month	245	254	267	280	294	309	325	341	358	376	395	415
LARGE COMMERCIAL (MWh)	0	0	0	0	0	0	0	0	0	0	0	0
Customers	0	0	0	0	0	0	0	0	0	0	0	0
Avg kWh/month	0	0	0	0	0	0	0	0	0	0	0	0
INDUSTRIAL (MWh)	346	353	360	408	417	597	518	529	540	552	619	493
Customers	5	5	5	6	6	7	7	7	7	7	7	8
Avg kWh/month	5767	5882	6000	6065	6200	6285	6425	6564	6703	6843	6933	7107
LARGE LOADS (MWh)	0	0	0	0	0	0	0	0	0	0	0	0
PUBLIC BUILDINGS (MWh)	919	1023	1161	1306	1448	1651	1859	2049	2281	2516	2776	3062
Customers	752	812	877	939	1004	1075	1139	1207	1280	1344	1411	1482
Avg kWh/month	102	105	110	116	122	128	135	141	149	156	164	172
IRRIGATION (MWh)	0	0	0	0	0	0	0	0	0	0	0	0
Customer's	0	0	0	0	0	0	0	0	0	0	0	0
Avg kWh/month	0	0	0	0	0	0	0	0	0	0	0	0
STREET LIGHTS (MWh)	100	105	110	116	122	128	136	141	148	155	163	171
Installed Units	46	48	51	53	56	59	62	65	68	71	75	79
Avg kWh/month	181	181	181	181	181	181	181	181	181	181	181	181
TOTAL SALES (MWh)	13675	14679	15858	17366	19543	20759	22627	24619	26733	28959	31327	33892
REC INTERNAL USE (MWh)	91	87	89	91	93	95	97	99	101	103	105	105
TOTAL CONSUMPTION (MWh)	15766	16766	15947	17455	19036	20854	22724	24716	26834	29062	31432	33997
ENERGY LOSSES (%)	19.5%	17.0%	16.0%	15.0%	14.0%	14.0%	13.5%	13.5%	13.0%	13.0%	12.0%	12.0%
ENERGY SEN/PURCHASED (MWh)	17103	17790	18985	20535	22135	24249	26271	28574	30844	33382	35789	38632
LOAD FACTOR (%)	49%	45.0%	44.0%	45.0%	46.0%	48.0%	49.0%	50.0%	50.0%	50.0%	50.0%	50.0%
MAXIMUM DEMAND (MW)	4.0	4.7	4.9	5.2	5.5	5.8	6.1	6.5	7.0	7.6	8.2	8.8
Annual growth rate %		18.1%	4.3%	5.0%	5.4%	5.0%	6.1%	6.4%	7.9%	8.2%	7.0%	8.2%

REC NAME BILERAN ELECTRIC COOPERATIVE, INC. 07/30/97
REC Acronym BILECO 03:19 PM
REC Code H07 filename:H07L.XK1
YEAR OF FORECAST 1997
1st Year of Historical Data 1992
(1992 or later year)

HISTORICAL SYSTEM PERFORMANCE

	1992	1993	1994	1995	1996	1992-1996 Average %
RESIDENTIAL (MWh)	2317	2498	2835	3310	3945	14.2%
Customers	7753	7065	7837	8705	9324	4.7%
Avg kWh/month	25	29	31	32	35	9.1%
* Resid. Minimum Bill (MWh)	119	192	222	169	186	11.8%
Customers	1854	1596	1854	1279	1556	-4.3%
Avg kWh/month	5	10	10	10	10	16.8%
* Other Resid. (MWh)	2198	2306	2652	3197	3749	14.3%
Customers	5899	5469	5941	7342	7684	6.8%
Avg kWh/month	31	35	37	36	41	7.0%
* BAPA (MWh)	-	-	1	13	10	NA
End-Use Customers	-	-	42	84	84	NA
Avg kWh/month	0	0	2	13	10	NA
SMALL COMMERCIAL (MWh)	550	598	673	710	752	8.1%
Customers	430	464	501	535	546	6.2%
Avg kWh/month	107	107	112	111	115	1.5%
LARGE COMMERCIAL (MWh)	-	-	-	-	-	NA
Customers	-	-	-	-	-	NA
Avg kWh/month	0	0	0	0	0	NA
INDUSTRIAL (MWh)	-	-	32	6	30	NA
Customers	-	-	3	1	1	NA
Avg kWh/month	0	0	889	500	2500	NA
LARGE LOADS (MWh)	-	-	-	-	-	NA
Customers	-	-	-	-	-	NA
Avg kWh/month	0	0	0	0	0	NA
PUBLIC BUILDINGS (MWh)	186	186	267	331	417	22.4%
Customers	115	125	144	173	182	12.2%
Avg kWh/month	135	124	155	159	191	9.1%
IRRIGATION (MWh)	-	-	-	-	-	NA
Customers	-	-	-	-	-	NA
Avg kWh/month	0	0	0	0	0	NA
STREET LIGHTS (MWh)	45	45	50	71	83	16.5%
Installed Units (estimated)	343	341	365	455	576	13.8%
Avg kWh/month	11	11	11	12	12	2.4%
TOTAL SALES (MWh)	3098	3327	3897	4488	5227	14.0%
REC INTERNAL USE (MWh)	13	16	12	11	14	1.9%
TOTAL CONSUMPTION (MWh)	3111	3343	3909	4459	5241	13.9%
ENERGY LOSSES (MWh)	875	1466	1175	1171	1462	13.7%
ENERGY LOSSES (%)	22%	30%	23%	21%	22%	
ENERGY GEN/PURCHASED (MWh)	3986	4809	5084	5630	6703	13.9%
LOAD FACTOR (%)	46%	55%	58%	35%	38%	
MAXIMUM DEMAND (MW)	1	1	1	2	2.00	18.9%

SYSTEM SALES FORECAST	1996	1997	1998	1999	2000	2001	2002	2003	2004	2005	2006	2007
RESIDENTIAL (MWh)	3945	4259	4561	5159	5785	6556	7573	8732	10111	11839	14005	16738
Customers	9324	10303	11499	12881	14503	16342	18661	20942	23445	26330	29660	33517
Avg kWh/month	35	34	34	33	33	33	34	35	36	37	39	42
SMALL COMMERCIAL (MWh)	752	807	879	962	1063	1175	1329	1484	1666	1830	2132	2434
Customers	545	590	645	703	768	834	922	999	1084	1177	1279	1392
Avg kWh/month	115	114	114	114	115	117	120	124	128	133	139	146
LARGE COMMERCIAL (MWh)	0	0	0	0	0	0	0	0	0	0	0	0
Customers	0	0	0	0	0	0	0	0	0	0	0	0
Avg kWh/month	0	0	0	0	0	0	0	0	0	0	0	0
INDUSTRIAL (MWh)	30	30	30	30	30	30	30	30	30	30	30	30
Customers	1	1	1	1	1	1	1	1	1	1	1	1
Avg kWh/month	2500	2500	2500	2500	2500	2500	2500	2500	2500	2500	2500	2500
LARGE LOADS (MWh)	0	0	0	0	0	0	0	0	0	0	0	0
PUBLIC BUILDINGS (MWh)	417	441	487	533	588	630	702	763	828	902	983	1073
Customers	182	205	239	275	315	358	408	456	511	574	646	727
Avg kWh/month	191	180	170	162	156	147	144	139	135	131	127	123
IRRIGATION (MWh)	0	0	0	0	0	0	0	0	0	0	0	0
Customers	0	0	0	0	0	0	0	0	0	0	0	0
Avg kWh/month	0	0	0	0	0	0	0	0	0	0	0	0
STREET LIGHTS (MWh)	83	84	87	90	94	98	107	111	113	115	118	120
Installed Units	576	578	592	609	634	660	714	734	745	758	772	788
Avg kWh/month	12	12	12	12	12	12	13	13	13	13	13	13
TOTAL SALES (MWh)	5227	5621	6143	6774	7560	8490	9742	11120	12749	14765	17268	20395
REC INTERNAL USE (MWh)	14	11	11	11	11	11	11	11	11	11	11	11
TOTAL CONSUMPTION (MWh)	5241	5632	6154	6785	7571	8501	9753	11131	12760	14777	17279	20407
ENERGY LOSSES (%)	21.8%	20.0%	19.0%	18.0%	17.0%	16.0%	15.0%	14.0%	14.0%	14.0%	14.0%	14.0%
ENERGY GEN/PURCHASED (MWh)	6703	7040	7597	8274	9121	10121	11474	12943	14837	17183	20092	23729
LOAD FACTOR (%)	35%	42.0%	42.0%	43.0%	43.0%	43.0%	44.0%	44.0%	45.0%	45.0%	46.0%	46.0%
MAXIMUM DEMAND (MW)	2.0	1.9	2.1	2.2	2.4	2.7	3.0	3.4	3.8	4.4	5.0	5.9
Annual growth rate %		-4.3%	7.9%	6.4%	10.2%	11.0%	10.8%	12.8%	12.1%	15.8%	14.4%	18.1%

REC NAME: SAMAR I ELECTRIC COOPERATIVE, INC. — 07/29/97
REC Acronym: SAMELCO 1 — 01:49 PM
REC Code: R09 — filename:R09L.WK1
YEAR OF FORECAST: 1997
1st Year of Historical Data (1992 or later year): 1992

HISTORICAL SYSTEM PERFORMANCE

	1992	1993	1994	1995	1996	1992-1996 Average %
RESIDENTIAL (MWh)	3742	3464	4952	5501	7068	17.2%
Customers	11904	13337	13902	13730	15424	6.7%
Avg kWh/month	26	22	30	32	38	9.3%
* Resid. Minimum Bill (MWh)	119	188	150	213	250	20.4%
Customers	969	1570	1228	1228	2016	19.5%
Avg kWh/month	10	10	10	14	10	0.8%
* Other Resid. (MWh)	3495	3002	3860	4102	5465	11.8%
Customers	8535	9099	8595	8198	8798	0.8%
Avg kWh/month	34	27	37	42	52	11.0%
* BAPA (MWh)	128	274	942	986	1353	80.3%
End-Use Customers	2380	2668	3979	4304	4610	18.0%
Avg kWh/month	4	9	20	19	24	52.8%
SMALL COMMERCIAL (MWh)	1414	1474	1548	1609	2226	12.0%
Customers	585	678	700	617	640	2.3%
Avg kWh/month	201	181	184	217	290	9.5%
LARGE COMMERCIAL (MWh)	-	-	-	-	-	NA
Customers	-	-	-	-	-	NA
Avg kWh/month	0	0	0	0	0	NA
INDUSTRIAL (MWh)	598	564	911	1960	2635	27.5%
Customers	2	2	2	3	3	10.7%
Avg kWh/month	41593	40167	37958	54444	73194	15.2%
LARGE LOADS (MWh)	-	-	-	-	-	NA
Customers	-	-	-	-	-	NA
Avg kWh/month	0	0	0	0	0	NA
PUBLIC BUILDINGS (MWh)	268	429	524	520	688	26.6%
Customers	132	139	149	158	158	4.6%
Avg kWh/month	169	257	293	274	353	21.0%
IRRIGATION (MWh)	-	873	306	-	-	NA
Customers (Sale for Resale)	-	1	-	-	-	NA
Avg kWh/month	0	72750	0	0	0	NA
STREET LIGHTS (MWh)	819	1055	1160	1235	1526	12.8%
Installed Units (estimated)	2125	2513	2935	3272	3487	13.2%
Avg kWh/month	32	39	33	31	32	-0.3%
TOTAL SALES (MWh)	7241	8299	9401	10624	13943	17.8%
REC INTERNAL USE (MWh)	119	93	117	93	98	-4.3%
TOTAL CONSUMPTION (MWh)	7360	8392	9518	10717	14041	17.5%
ENERGY LOSSES (MWh)	1063	1073	1112	1249	1533	9.5%
ENERGY LOSSES (%)	13%	11%	10%	10%	10%	
ENERGY GEN/PURCHASED (MWh)	8423	9465	10630	11966	15574	16.6%
LOAD FACTOR (%)	32%	36%	40%	46%	51%	
MAXIMUM DEMAND (MW)	3	3	3	3	4	3.9%

SYSTEM SALES FORECAST	1996	1997	1998	1999	2000	2001	2002	2003	2004	2005	2006	2007
RESIDENTIAL (MWh)	7069	7781	8602	9729	10814	11657	12603	13984	15275	16683	18200	19839
Customers	15424	16272	17312	19093	20119	21343	22698	23836	25147	26422	27721	29039
Avg kWh/month	38	40	41	42	44	46	47	49	51	53	55	57
SMALL COMMERCIAL (MWh)	2226	2741	3399	3971	4558	5582	6412	7425	8593	9959	11530	13333
Customers	640	768	916	999	1070	1159	1263	1330	1401	1475	1555	1639
Avg kWh/month	290	297	309	331	357	387	423	455	511	562	618	675
LARGE COMMERCIAL (MWh)	0	0	0	0	0	0	0	0	0	0	0	0
Customers	0	0	0	0	0	0	0	0	0	0	0	0
Avg kWh/month	0	0	0	0	0	0	0	0	0	0	0	0
INDUSTRIAL (MWh)	2635	4117	6433	8846	12163	16724	22995	31618	41459	54467	71488	93828
Customers	3	4	5	5	6	6	7	6	8	8	9	9
Avg kWh/month	73194	91493	114366	142953	178697	223372	279215	349018	436273	545341	681676	852095
LARGE LOADS (MWh)	0	0	0	0	0	0	0	0	0	0	0	0
PUBLIC BUILDINGS (MWh)	698	756	828	914	1012	1126	1263	1423	1603	1804	2031	2285
Customers	158	178	197	219	241	265	291	321	353	388	427	469
Avg kWh/month	363	354	350	348	350	354	361	370	379	388	397	406
IRRIGATION (MWh)	0	0	0	0	0	0	0	0	0	0	0	0
Customers	0	0	0	0	0	0	0	0	0	0	0	0
Avg kWh/month	0	0	0	0	0	0	0	0	0	0	0	0
STREET LIGHTS (MWh)	1326	1542	1806	2069	2376	2735	3036	3365	3729	4146	4595	5149
Installed Units	3487	4191	5042	5855	6757	7802	8629	9490	10436	11469	12597	13830
Avg kWh/month	32	31	30	29	29	29	29	30	30	30	30	31
TOTAL SALES (MWh)	13943	16936	21069	25529	30753	37623	46515	57315	70698	87060	107853	134434
REC INTERNAL USE (MWh)	98	100	100	110	110	110	120	120	120	120	130	130
TOTAL CONSUMPTION (MWh)	14041	17036	21169	25639	30863	37733	46635	57935	70818	87180	107983	134564
ENERGY LOSSES (%)	9.8%	11.5%	12.0%	12.0%	12.0%	12.0%	12.0%	12.0%	12.0%	12.0%	12.0%	12.0%
ENERGY GEN/PURCHASED (MWh)	15574	19250	24055	29135	35072	42879	52994	65835	80475	99068	122703	152914
LOAD FACTOR (%)	51%	45.0%	50.0%	55.0%	55.0%	60.0%	60.0%	65.0%	65.0%	65.0%	65.0%	65.0%
MAXIMUM DEMAND (MW)	3.5	4.9	5.5	6.0	7.3	8.2	10.1	11.6	14.1	17.4	21.5	26.9
Annual growth rate %		39.5%	12.5%	10.1%	20.4%	12.1%	23.6%	14.7%	22.2%	23.1%	23.9%	24.5%

REC NAME SANELCO II ELECTRIC COOPERATIVE, INC. 07/30/97
REC Acronym SANELCO II 02:02 PM
REC Code W10 filename:W10L.W81
YEAR OF FORECAST 1997
1st Year of Historical Data 1992
(1992 or later year)

HISTORICAL SYSTEM PERFORMANCE 1992-1996

	1992	1993	1994	1995	1996	Average %
RESIDENTIAL (MWh)	5520	6003	6801	8107	10024	17.31
Customers	12279	13422	15259	16535	17913	10.02
Avg kWh/month	36	37	37	41	47	6.51
• Resid. Minimum Bill (MWh)	210	195	230	123	150	-21.31
Customers	2216	2352	2398	1346	1217	-13.08
Avg kWh/month	7	8	7	8	9	5.11
• Other Resid. (MWh)	4978	5451	6059	7211	8804	15.91
Customers	9171	9733	10365	12073	12928	9.01
Avg kWh/month	44	46	49	50	57	6.42
• RAPA (MWh)	241	359	512	775	2090	45.81
"	892	1297	2487	3216	3768	43.41
Avg kWh/month	23	23	17	20	24	1.71
SMALL COMMERCIAL (MWh)	251	246	242	293	500	4.61
Customers	442	440	442	523	525	4.41
Avg kWh/month	47	47	49	47	48	0.21
LARGE COMMERCIAL (MWh)	1595	1714	1826	1958	2404	10.81
Customers	380	392	394	481	501	7.21
Avg kWh/month	350	364	386	354	400	3.41
INDUSTRIAL (MWh)	835	970	630	366	830	-0.21
Customers	2	2	2	2	2	0.01
Avg kWh/month	34792	40417	26250	36083	34583	-0.21
LARGE LOADS (MWh)	236	231	272	401	402	14.21
Customers	11	12	12	19	14	6.21
Avg kWh/month	1788	1604	1889	1759	2393	7.61
PUBLIC BUILDINGS (MWh)	1040	1291	1343	1530	1846	15.21
Customers	220	248	277	292	324	9.21
Avg kWh/month	383	434	404	437	435	5.51
IRRIGATION (MWh)	-	-	-	-	-	NA
Customers	-	-	-	-	-	NA
Avg kWh/month	0	0	0	0	0	NA
STREET LIGHTS (MWh)	340	319	350	356	477	2.01
Installed Units (estimated)	1213	1435	1754	2064	2408	17.51
Avg kWh/month	22	19	16	16	17	-2.41
TOTAL SALES (MWh)	9634	10734	12464	13541	16203	14.01
REC INTERNAL USE (MWh)	142	155	367	402	335	13.41
TOTAL CONSUMPTION (MWh)	9776	11029	12831	13943	16538	14.01
ENERGY LOSSES (MWh)	2647	2882	2952	3225	2516	-5.21
ENERGY LOSSES (%)	21%	20%	20%	19%	13%	
ENERGY GEN/PURCHASED (MWh)	12443	13911	14783	17168	19034	10.01
LOAD FACTOR (%)	48%	53%	42%	49%	54%	
MAXIMUM DEMAND	3	3	4	4	4	7.51

SYSTEM SALES FORECAST	1996	1997	1998	1999	2000	2001	2002	2003	2004	2005	2006	2007
RESIDENTIAL (MWh)	10024	10946	12055	13592	15432	17456	19756	22206	24918	27929	31133	34701
Customers	17963	19400	20873	22324	24727	26613	28613	30417	32256	34167	35970	37844
Avg kWh/month	47	47	48	50	52	55	58	61	64	68	72	76
SMALL COMMERCIAL (MWh)	300	311	327	344	372	358	424	444	464	485	507	530
Customers	575	543	566	599	631	671	695	709	735	747	759	774
Avg kWh/month	48	48	49	48	49	49	51	52	53	54	56	57
LARGE COMMERCIAL (MWh)	2404	2511	2669	2835	2975	3144	3322	3525	3739	3947	4209	4465
Customers	501	516	532	547	564	581	555	616	635	654	675	694
Avg kWh/month	400	409	438	429	449	451	463	472	491	505	521	537
INDUSTRIAL (MWh)	830	830	830	830	830	830	830	830	830	830	830	830
Customers	2	2	2	2	2	2	2	2	2	2	2	2
Avg kWh/month	34583	34583	34583	34583	34583	34583	34583	34583	34583	34583	34583	34583
LARGE LOADS (MWh)	402	406	410	414	418	423	427	431	435	440	444	448
PUBLIC BUILDINGS (MWh)	1846	1935	2051	2326	2544	2783	2991	3187	3394	3585	3784	3992
Customers	326	347	377	419	463	500	535	564	597	630	664	701
Avg kWh/month	435	435	471	465	458	444	446	471	474	474	475	475
IRRIGATION (MWh)	0	0	0	0	0	0	0	0	0	0	0	0
Customers	0	0	0	0	0	0	0	0	0	0	0	0
Avg kWh/month	0	0	0	0	0	0	0	0	0	0	0	0
STREET LIGHTS (MWh)	472	487	501	529	550	586	612	632	649	665	679	692
Installed Units	2408	2437	2491	2592	2715	2813	2932	2974	3024	3069	3103	3132
Avg kWh/month	17	17	17	17	17	17	18	18	18	18	18	18
TOTAL SALES (MWh)	16283	17486	18963	20845	25152	25619	28367	31255	34429	37859	41650	45659
SEC INTERNAL USE (MWh)	235	235	259	260	261	261	261	261	261	261	261	261
TOTAL CONSUMPTION (MWh)	16518	17721	19222	21103	25393	25880	28623	31516	34650	38160	41891	45920
ENERGY LOSSES (%)	13.2%	13.0%	13.0%	13.0%	13.0%	13.0%	13.0%	13.0%	13.0%	13.0%	13.0%	13.0%
ENERGY GEN/PURCHASED (MWh)	19034	20369	22094	24255	28888	29747	32900	36225	39816	43862	48151	52782
LOAD FACTOR (%)	54%	47.0%	47.0%	48.0%	48.0%	48.0%	48.0%	49.0%	49.0%	49.0%	49.0%	49.0%
MAXIMUM DEMAND (MW)	4.0	4.9	5.4	5.8	6.8	7.1	7.8	8.4	9.3	10.2	11.2	12.3
Annual growth rate %		23.1%	8.5%	7.5%	10.9%	10.6%	10.0%	7.9%	10.1%	10.0%	9.8%	9.6%

REC NAME	NORTHERN SANAN ELECTRIC COOPERATIVE INC.					03/30/97
REC Acronym	NORSANELCO					01:53 PM
REC Code	NOR					Filename:NORL.VKL
YEAR OF FORECAST	1997					
1st Year of Historical Data (1992 or later year)	1992					
HISTORICAL SYSTEM PERFORMANCE						1992-1996
	1992	1993	1994	1995	1996	Average %
RESIDENTIAL (MWh)	3849	4470	5263	6472	8224	20.9%
Customers	11459	12576	10743	15370	13471	4.8%
Avg kWh/month	28	30	43	53	51	16.8%
* Resid. Minimum Bill (MWh)	720	494	1250	2411	2268	30.9%
Customers	6819	7500	3890	10005	10000	10.0%
Avg kWh/month	9	10	13	20	19	19.0%
* Other Resid. (MWh)	3029	3576	3823	5651	5457	15.4%
Customers	4530	5076	2332	3343	3446	-7.2%
Avg kWh/month	55	59	337	141	132	24.3%
* RAPA (MWh)	0	0	190	410	506	NA
End-Use Customers	0	0	21	17	25	NA
Avg kWh/month	0	0	754	2245	1697	NA
SMALL COMMERCIAL (MWh)	1844	2367	2815	3533	3969	1.7%
Customers	1281	1061	1526	1691	1120	-5.5%
Avg kWh/month	120	139	134	117	147	5.1%
LARGE COMMERCIAL (MWh)	-	-	-	-	-	NA
Customers	-	-	-	-	-	NA
Avg kWh/month	0	0	0	0	0	NA
INDUSTRIAL (MWh)	-	156	140	99	89	NA
Customers	-	3	4	5	4	NA
Avg kWh/month	0	4533	2917	1650	1856	NA
LARGE LOADS (MWh)	-	-	-	-	-	NA
Customers	-	-	-	-	-	NA
Avg kWh/month	0	0	0	0	0	NA
PUBLIC BUILDINGS (MWh)	455	613	712	644	355	13.4%
Customers	147	139	229	287	312	16.9%
Avg kWh/month	227	285	259	187	201	-3.0%
IRRIGATION (MWh)	-	-	-	-	-	NA
Customers	-	-	-	-	-	NA
Avg kWh/month	0	0	0	0	0	NA
STREET LIGHTS (MWh)	89	86	102	89	104	4.0%
Installed Units (estimated)	67	51	59	42	46	-9.0%
Avg kWh/month	111	141	144	177	188	14.2%
TOTAL SALES (MWh)	6232	7692	8032	10837	11159	15.6%
REC INTERNAL USE (MWh)	13	16	32	14	24	16.6%
TOTAL CONSUMPTION (MWh)	6250	7707	8064	10851	11183	15.6%
ENERGY LOSSES (MWh)	1783	2078	1956	2044	3516	16.8%
ENERGY LOSSES (%)	22%	23%	20%	16%	23%	
ENERGY GEN/PURCHASED (MWh)	8033	9180	10020	12895	14479	15.9%
LOAD FACTOR (%)	46%	35%	34%	37%	43%	
MAXIMUM DEMAND	2	3	3	4	4	18.9%

SYSTEM SALES FORECAST	1996	1997	1998	1999	2000	2001	2002	2003	2004	2005	2006	2007
RESIDENTIAL (MWh)	8224	9546	10198	13273	15984	19178	23178	28151	34696	42854	53137	66084
Customers	13473	15896	19077	22339	26173	32021	37969	44704	52593	61864	72744	85103
Avg kWh/month	51	50	49	49	49	50	51	53	55	58	61	64
SMALL COMMERCIAL (MWh)	1969	2186	2269	2469	2693	2909	3140	3335	3662	3981	4052	4126
Customers	1120	1187	1266	1354	1448	1559	1641	1736	1837	1944	2058	2178
Avg kWh/month	147	149	151	153	155	158	159	162	166	171	164	158
LARGE COMMERCIAL (MWh)	0	0	0	0	0	0	0	0	0	0	0	0
Customers	0	0	0	0	0	0	0	0	0	0	0	0
Avg kWh/month	0	0	0	0	0	0	0	0	0	0	0	0
INDUSTRIAL (MWh)	89	89	89	89	89	89	89	89	89	89	89	89
Customers	4	4	4	4	4	4	4	4	4	4	4	4
Avg kWh/month	1854	1854	1854	1854	1854	1854	1854	1854	1854	1854	1854	1854
LARGE LOADS (MWh)	0	0	2190	2190	2190	2190	2190	2190	2190	2190	2190	2190
PUBLIC BUILDINGS (MWh)	753	937	1127	1444	1855	2364	3054	3945	5111	6515	8275	10565
Customers	312	374	457	559	679	820	988	1174	1398	1666	1988	2374
Avg kWh/month	201	209	214	215	228	240	258	280	305	326	347	371
IRRIGATION (MWh)	0	0	0	0	0	0	0	0	0	0	0	0
Customers	0	0	0	0	0	0	0	0	0	0	0	0
Avg kWh/month	0	0	0	0	0	0	0	0	0	0	0	0
STREET LIGHTS (MWh)	104	132	284	493	757	1181	1727	2254	2893	3667	4592	5648
Installed Units	46	51	90	126	162	206	256	286	312	340	365	386
Avg kWh/month	188	215	262	321	390	477	562	658	769	899	1049	1218
TOTAL SALES (MWh)	11159	12822	17226	19958	23470	29913	33378	40115	48630	59296	72340	88702
REC INTERNAL USE (MWh)	24	25	25	25	25	25	25	25	25	25	25	25
TOTAL CONSUMPTION (MWh)	11183	12847	17251	19983	23495	29938	33403	40140	48655	59321	72365	88727
ENERGY LOSSES (%)	22.5%	20.0%	18.0%	16.0%	14.0%	13.0%	13.0%	13.0%	13.0%	13.0%	13.0%	13.0%
ENERGY SEN/PURCHASED (MWh)	14479	16058	21038	23790	27320	32182	38395	46137	55925	68185	83178	101985
LOAD FACTOR (%)	41%	42.0%	45.0%	50.0%	50.0%	50.0%	50.0%	50.0%	50.0%	50.0%	50.0%	50.0%
MAXIMUM DEMAND (MW)	4.0	4.4	5.3	5.4	6.2	7.3	8.8	10.5	12.8	15.6	19.0	23.3
Annual growth rate %		9.1%	22.3%	1.8%	14.8%	17.5%	19.4%	20.2%	21.2%	21.9%	22.0%	22.6%

EASTERN SAMAR ELECTRIC COOPERATIVE, INC. 07/30/91
02:33 PM
Filename:MILL.WK1

REC Acronym	ESANELCO
REC Code	NES
YEAR OF FORECAST	1997
1st Year of Historical Data (1992 or later year)	1992

HISTORICAL SYSTEM PERFORMANCE

	1992	1993	1994	1995	1996	1992-1996 Average %
RESIDENTIAL (MWh)	3181	3953	3710	5576	7402	24.5%
Customers	8367	9242	9604	11180	13114	13.1%
Avg kWh/month	32	36	32	38	46	9.9%
• Resid. Minimum Bill (MWh)	210	230	200	157	170	-5.1%
Customers	1357	1844	1534	1305	1445	-6.8%
Avg kWh/month	10	10	11	10	10	-0.4%
• Other Resid. (MWh)	2971	3574	3365	5070	7176	24.7%
Customers	6410	6939	7806	9904	11631	15.2%
Avg kWh/month	37	43	36	42	51	8.2%
• SAPA (MWh)	-	147	153	165	256	NA
End-Use Customers	-	459	412	419	630	NA
Avg kWh/month	0	27	28	28	33	NA
SMALL COMMERCIAL (MWh)	837	1101	1066	1200	1495	15.6%
Customers	714	786	760	815	815	3.4%
Avg kWh/month	98	117	116	123	153	11.8%
LARGE COMMERCIAL (MWh)	-	-	-	-	-	NA
Customers	-	-	-	-	-	NA
Avg kWh/month	0	0	0	0	0	NA
INDUSTRIAL (MWh)	26	490	378	431	508	55.5%
Customers	52	40	38	53	42	4.5%
Avg kWh/month	130	396	829	678	693	49.2%
LARGE LOADS (MWh)	-	-	-	-	-	NA
Customers	-	-	-	-	-	NA
Avg kWh/month	0	0	0	0	0	NA
PUBLIC BUILDINGS (MWh)	551	404	404	504	710	19.3%
Customers	129	161	184	234	277	21.1%
Avg kWh/month	227	209	185	208	224	-1.5%
IRRIGATION (MWh)	-	-	-	-	-	NA
Customers	-	-	-	-	-	NA
Avg kWh/month	0	0	0	0	0	NA
STREET LIGHTS (MWh)	85	139	181	302	402	47.5%
Installed Units (estimated)	472	772	800	1010	1290	24.3%
Avg kWh/month	15	15	19	25	28	16.8%
TOTAL SALES (MWh)	4540	5783	5747	7915	10713	24.0%
REC INTERNAL USE (MWh)	31	56	41	59	59	12.4%
TOTAL CONSUMPTION (MWh)	4265	5843	5788	7972	10776	26.1%
ENERGY LOSSES (MWh)	1512	1347	2346	1641	1578	4.7%
ENERGY LOSSES (%)	24%	19%	29%	17%	13%	
ENERGY SER/PURCHASED (MWh)	5535	7190	8134	9613	12354	22.0%

LOAD FACTOR (%)	32%	41%	46%	33%	42%	
MAXIMUM DEMAND (MW)	2	2	2	3	3	10.7%

SYSTEM SALES FORECASS	1996	1997	1998	1999	2000	2001	2002	2003	2004	2005	2006	2007
RESIDENTIAL (MWh)	7502	8519	9860	11539	13758	16314	19477	23843	28057	32593	37623	43462
Customers	13784	15350	17649	20187	23102	25979	30298	34402	38237	42178	46148	50518
Avg kWh/month	45	47	47	48	49	52	55	58	61	64	69	72
SMALL COMMERCIAL (MWh)	1495	1678	1882	2129	2451	2832	3235	3706	4206	4712	5283	5923
Customers	815	864	923	958	1050	1169	1255	1340	1437	1465	1573	1665
Avg kWh/month	153	162	170	178	195	202	215	230	247	263	279	297
LARGE COMMERCIAL (MWh)	0	0	0	0	0	0	0	0	0	0	0	0
Customers	0	0	0	0	0	0	0	0	0	0	0	0
Avg kWh/month	0	0	0	0	0	0	0	0	0	0	0	0
INDUSTRIAL (MWh)	508	555	583	593	625	655	694	733	771	813	857	904
Customers	62	64	67	70	73	75	78	82	85	88	92	95
Avg kWh/month	683	691	700	709	718	727	737	747	757	767	778	789
LARGE LOADS (MWh)	0	0	0	0	0	0	0	0	0	0	0	0
PUBLIC BUILDINGS (MWh)	710	755	774	820	891	924	1007	1050	1146	1207	1261	1317
Customers	273	283	295	312	332	349	374	386	395	399	406	412
Avg kWh/month	214	217	228	219	221	221	224	233	243	252	259	266
IRRIGATION (MWh)	0	0	0	0	0	0	0	0	0	0	0	0
Customers	0	0	0	0	0	0	0	0	0	0	0	0
Avg kWh/month	0	0	0	0	0	0	0	0	0	0	0	0
STREET LIGHTS (MWh)	602	443	1148	2040	3363	3973	5086	5781	6154	6508	6910	7345
Installed Units	1200	1320	1288	5458	8539	9659	11791	12834	13980	13337	13620	13931
Avg kWh/month	28	28	30	31	33	34	36	38	39	41	42	44
TOTAL SALES (MWh)	10717	11981	14284	17120	21083	24700	29898	35141	40308	45832	51935	58956
REC INTERNAL USE (MWh)	59	61	62	63	63	63	63	63	63	63	63	63
TOTAL CONSUMPTION (MWh)	10776	12042	14306	17183	21146	24763	29961	35204	40371	45895	51998	59019
ENERGY LOSSES (%)	12.0%	12.0%	12.0%	12.0%	12.0%	12.0%	12.0%	12.0%	12.0%	12.0%	12.0%	12.0%
ENERGY GEN/PURCHASED (MWh)	12354	13684	16257	19526	24030	28140	34047	40005	45877	52154	59088	67067
LOAD FACTOR (%)	47%	43.0%	45.0%	50.0%	52.0%	53.0%	54.0%	55.0%	55.0%	55.0%	55.0%	55.0%
MAXIMUM DEMAND (MW)	3.0	3.6	4.1	4.5	5.3	6.2	7.2	8.3	9.5	10.8	12.3	13.9
Annual growth rate %		21.1%	13.5%	8.1%	18.3%	14.9%	18.7%	15.4%	14.7%	13.7%	13.5%	13.5%

Appendix 3.12.1-1 Expansion Plan of Total Distribution Lines (km) of 13.2 kV and 240 V in each ECs

Name of EC	1997	1998	1999	2000	2001	2002	2003	2004	2005	Total Lengh (km)	Average Lengh (km)	Growth rate of Demand (%)
Leyeco I	6.99	30.59	21.96	54.46	51.61	17.07	20.12	34.12	15.94	252.85	28.09	12.7
Leyeco II	5.28	11.17	10.75	10.20	8.13	7.20	3.30	2.11	2.26	60.39	6.71	15.6
Leyeco III	8.95	15.65	14.90	16.35	9.60	11.51	17.05	15.55	11.90	121.46	13.50	13.0
Leyeco IV	18.00	20.00	15.00	23.00	25.00	22.00	16.00	20.00	35.00	194.00	21.56	5.9
Leyeco V	28.25	56.98	68.90	80.75	55.25	50.50	45.44	54.55	58.25	498.87	55.43	9.3
Soleco	12.60	54.70	28.90	39.00	34.20	27.10	40.90	44.20	43.10	324.70	36.08	5.8
Samelco I	13.55	16.55	27.35	36.65	29.70	34.25	34.00	43.50	38.67	274.22	30.47	17.8
Samelco II	13.84	34.58	24.82	15.08	15.98	13.94	21.85	19.28	50.00	209.36	23.26	9.2
Norsamelco		64.80	58.10	30.30	45.80	35.90	117.00	128.00	126.80	606.70	67.41	17.6

Appendix 3.12.1-2 Expansion Plan of 13.2kV/240V Distribution Transformer (kVA) in each ECs

Name of EC	1997	1998	1999	2000	2001	2002	2003	2004	2005	Total Capacity (kVA)	Average Capacity (kVA)
Leyeco II	1550.0	1800.0	3150.0	2500.0	2350.0	1500.0	1205.0	1430.0	1100.0	16585.0	1842.8
Leyeco IV	650.0	725.0	462.5	462.5	400.0	600.0	500.0	901.0	651.0	5352.0	594.7
Leyeco V	495.0	625.0	510.0	435.0	515.0	285.0	340.0	550.0	540.0	4295.0	477.2
Soleco	675.0	575.0	525.0	525.0	525.0	525.0	525.0	525.0	525.0	4925.0	547.2
Samelco I	1787.5	2926.0	1675.0	1975.0	1863.0	2075.0	1850.0	2801.0	1775.0	18727.5	2080.8
Esamelco	575.0	772.0	482.5	1299.0	587.5	582.5	1267.0	1769.0	2323.5	9658.0	1073.1
Norsamelco		550.0	960.0	547.5	1129.5	1132.5	1292.5	1305.0	1417.5	8334.5	1041.8

LEYTE V ELECTRIC COOPERATIVE, INC.
(LEYECO V)
Ormoc City

Appendix 4.4-1

FINANCIAL ANALYSIS

A. Statement of Operations

Description/Particulars		1991	1992	1993	1994	1995	1996
							As of 11/30
1 Utility Operating Revenue							
1.1 Operating Revenues	P	77,363,923	95,394,906	108,199,549	123,376,633	144,149,628	151,320,950
1.2 Other Operating Revenues					2,905,034	3,458,136	3,531,204
1.3 Total Operating Income		77,363,923	95,394,906	108,199,549	126,281,667	147,607,764	160,850,154
2 Power Cost							
2.1 Cost of Power Purched from NPC		51,454,082	65,118,108	72,425,041	84,060,933	104,675,493	113,405,742
3 Non-Power Cost							
3.1 Distribution Expenses-Operation		1,691,438	2,156,988	1,967,254	2,008,102	2,123,436	3,693,257
3.2 Distribution Expenses - Maint.		1,875,931	3,851,477	3,005,422	3,773,749	8,812,402	3,611,991
3.3 Consumers Accts. Expenses		5,767,720	6,713,718	7,479,994	7,712,983	9,155,097	7,275,500
3.4 Administrative & Gen. Expenses		6,174,268	7,504,767	8,045,099	8,396,005	12,401,598	14,866,250
3.5 Total Non-power cost		15,709,357	20,226,950	20,497,769	21,890,839	32,492,533	29,446,998
4 Total Operating & Maint. Expenses		67,163,439	85,345,058	92,922,810	105,951,772	137,168,026	142,852,740
5 Operating Margin (Loss) (1-4)		10,200,484	10,049,848	15,276,739	20,329,895	10,439,738	17,999,414
6 Depreciation & Amortization Expense		1,537,214	2,032,660	2,581,707	3,241,994	3,810,685	4,363,648
7 Interest Expense		894,337	2,740,305	3,928,883	5,272,586	6,123,540	5,798,825
8 Net Operating Margin (Loss) (5-6&7)		7,768,933	5,276,883	8,766,149	11,815,315	505,513	7,836,941
9 Non-Operating Revenue							
9.1 House wiring		55,036	28,819	30,661	27,634	29,145	20,008
9.2 others		326,434	1,091,731	1,347,312	1,833,647	2,007,061	1,290,453
10 Non-Operating Expense							
10.1 House wiring		32,673	10,600	7,407	4,515	4,944	8,709
10.2 Others					58,454	27,425	80,863
11 Extra Ordinary					4,830	69,416	250
12 NET MARGIN (Loss) (8+9-10+11)	P	8,117,730	6,386,833	10,136,715	13,608,797	2,577,768	9,058,080
B FINANCIAL DATA							
Cash General Fund		2,554,490	2,497,416	9,854,390	10,623,343	8,120,263	9,592,611
Sinking Fund :							
NEA Amortization					2,534,840	2,538,501	619,098
Reinvestment Fund (5%)			1,518,202	4,523,882	7,373,251	9,425,038	2,378,051
Accounts Receivable Energy							
Gross Receivable					25,706,628	31,877,180	47,720,193
Allowance for uncollectibles					10,072,447	11,525,596	13,081,535
Net Receivables		17,867,917	11,114,382	12,866,081	15,634,181	20,351,584	34,638,658
Accounts Payable Power							
Current		4,238,743	9,188,368	6,361,170	7,056,326	8,641,975	9,609,489
Arrears							
3% Prompt Payment Disc. Availed							605,395
Interest Charges							66,929
Advances to Officers & Employees		743,657	188,351	99,752	51,089	83,769	206,068
C STATISTICAL DATA							
KWH Purchased		32,558,407	37,289,497	40,349,456	42,910,313	50,263,169	54,183,884
KWH Sales		27,391,560	31,341,384	34,567,869	37,618,105	42,671,198	46,631,262
Coop consumption		113,115	132,002	205,718	234,999	273,187	224,601
System Loss :							
In KWH		5,053,737	6,816,111	5,575,869	5,057,209	7,318,784	7,328,021
In Peso Value		7,984,896	10,178,194	9,980,605	9,912,130	15,223,071	15,462,124
In %					12%	15%	14%

Collection Efficiency						
Loan Amortization Payment	2,130,428	6,229,742	7,669,269	7,200,324	7,685,748	6,429,897
(Current with Advance)						
Average System's Rate	2.86	3.03	3.05	3.28	3.38	3.42
Average Power Cost	1.58	1.75	1.79	1.96	2.08	2.11
Ratio of Consumers/Employees						
Total Number of Employee					141	178
Number of Consumers Served					31,052	32,298
Ratio					220	181
0 CONSUMER SALES & REVENUE DATA						
D.1 Consumers per Class/Type						
Residential	21,277	23,713	24,346	26,631	29,078	30,377
Commercial	815	984	1,037	1,074	1,104	972
Industrial	207	257	276	338	365	421
St. Lights/Sec. Lights	40	97	88	122	155	197
Public Buildings	89	151	177	189	207	210
Water System			13	14	14	18
BAPA			82	92	109	103
TOTAL	P 22,428	25,202	26,019	28,460	31,052	32,298
D.2 Sales In KWH						
Residential	11,971,597	14,040,081	15,196,880	17,315,266	19,434,874	21,836,287
Commercial	1,924,334	2,187,214	2,411,976	2,686,668	2,935,696	2,864,975
Industrial	12,608,122	13,932,630	9,157,393	10,453,121	12,132,858	13,262,548
St. Lights	430,392	707,699	660,029	670,277	980,084	1,703,674
Public Buildings	457,115	473,760	588,789	675,101	684,651	672,660
Water System			5,737,912	4,820,547	5,334,746	4,962,816
BAPA			814,890	997,125	1,168,289	1,328,302
TOTAL	27,391,560	31,341,384	34,567,869	37,618,105	42,671,198	46,631,262
D.3 Sales In Peso						
Residential	33,322,018	41,669,782	45,134,638	55,554,172	65,479,733	73,481,062
Commercial	5,405,846	6,434,084	7,278,807	8,681,487	9,959,438	9,841,333
Industrial	37,170,256	43,787,646	29,616,873	35,590,871	43,730,512	47,532,379
St. Lights	1,193,050	1,795,402	2,182,118	2,553,158	3,269,878	5,733,687
Public Buildings	1,296,915	1,391,181	1,712,797	2,140,777	2,284,341	2,256,743
Water System			16,171,353	15,694,994	15,524,173	14,073,019
BAPA			3,517,212	3,161,174	3,901,553	4,402,727
TOTAL	P 78,388,085	95,078,095	105,613,798	123,376,633	147,607,764	157,320,950

esmv013097

LEYTE V ELECTRIC COOPERATIVE, INC.
(LEYECO V)
Ormoc City
-o0o-

TREND OF FIXED ASSETS OVER THE LAST 6 YEARS
1991 - 1996
GENERAL PLANT

	1991	1992	1993	1994	1995	1996
OFFICE EQUIPMENT (391)						
FIXED ASSET	1,439,727.83	1,782,674.39	2,010,479.91	2,429,424.82	3,425,069.59	3,687,854.99
Less: Depreciation	1,164,024.46	1,294,336.11	1,490,026.25	1,740,009.12	309,277.47	986,975.59
NET BOOK VALUE	*275,703.37*	*488,338.28*	*520,453.66*	*689,415.70*	*3,115,792.12*	*2,700,879.40*
TRANSPORTATION EQUIPMENT (392)						
FIXED ASSET	1,307,631.92	2,272,572.72	3,563,090.99	4,176,464.24	5,048,346.78	5,238,346.78
Less: Depreciation	589,042.53	696,655.26	1,393,220.25	1,362,279.75	1,823,798.26	1,455,539.72
NET BOOK VALUE	*718,589.39*	*1,575,917.46*	*2,169,870.74*	*2,814,184.49*	*3,224,548.52*	*3,782,807.06*
TOOL/SHOP & GARAGE EQUIPMENT (394)						
FIXED ASSET	688,909.24	905,949.24	916,279.89	1,147,777.39	1,551,397.13	1,740,719.13
Less: Depreciation	471,757.92	547,708.13	685,347.99	810,120.36	184,970.55	528,978.90
NET BOOK VALUE	*217,151.32*	*358,241.11*	*230,931.90*	*337,657.03*	*1,366,426.58*	*1,211,740.23*
LABORATORY EQUIPMENT (395)						
FIXED ASSET	131,642.50	131,642.50	131,642.50	138,384.00	138,384.00	138,384.00
Less: Depreciation	72,396.64	84,467.68	96,538.72	120,946.26	15,471.54	6,741.50
NET BOOK VALUE	*59,245.86*	*47,174.82*	*35,103.78*	*17,437.74*	*122,912.46*	*131,642.50*
POWER OPERATED EQUIPMENT (396)						
FIXED ASSET	-	-	-	-	245,592.00	-
Less: Depreciation	-	-	-	-	-	-
NET BOOK VALUE	-	-	-	-	*245,592.00*	-
COMMUNICATION EQUIPT. (397)						
FIXED ASSET	528,932.48	528,932.48	780,832.48	1,199,895.28	1,244,702.18	1,479,762.18
Less: Depreciation	393,887.12	439,640.03	492,408.44	639,664.26	790,020.94	498,782.27
NET BOOK VALUE	*135,045.36*	*89,292.45*	*288,424.04*	*560,231.02*	*454,681.24*	*980,979.91*
MISCELLANEOUS EQUIPMENT						
FIXED ASSET	41,289.01	41,289.01	41,289.01	54,289.01	57,414.01	79,986.51
Less: Depreciation	36,108.81	37,320.26	38,226.62	41,289.01	45,882.73	18,162.08
NET BOOK VALUE	*5,180.20*	*3,968.75*	*3,062.39*	*13,000.00*	*11,531.28*	*61,824.43*

LEYTE V ELECTRIC COOPERATIVE, INC.
(LEYECO V)
Ormoc City
-oOo-

TREND OF FIXED ASSETS OVER THE LAST 6 YEARS
1991 - 1996
DISTRIBUTION PLANT

362-370	ACCOUNT No.	1991	1992	1993	1994	1995	1996
Structures & Improvements	361	-	-	-	-	-	-
Station Equipments	362	1,991,187.28	1,991,187.28	7,659,621.66	8,003,448.34	14,405,827.05	7,970,649.47
Poles/Towers & Fixtures	364	3,455,340.77	3,455,340.77	3,455,340.77	3,455,340.77	5,978,301.15	5927964.37
Overhead Conductors & Devices	365	2,848,248.49	3,058,368.18	3,058,244.39	3,058,244.39	4,651,508.17	4651508.17
Line Transformers	368	4,694,956.86	5,271,510.58	6,287,350.38	6,980,203.32	8,617,351.94	11076921.66
Services	369	4,225,034.19	4,225,034.19	4,225,034.19	4,225,034.19	4,225,034.19	4,225,034.19
Meters	379	3,928,813.66	5,624,653.32	7,369,644.65	9,943,670.35	13,508,399.43	16310163.46
St. Lightings & Signal System	373	648,601.88	657,409.88	657,409.88	657,409.88	657,409.88	657,409.88
Electric Plant Purchased	102	-	-	-	63,383.00	63,383.00	63,383.00
Completed Const. not Classified	106	16,857,810.89	17,346,503.24	30,434,657.33	32,081,719.79	35,946,837.46	35946837.46
TOTAL FIXED ASSETS		38,649,994.02	41,630,007.44	63,147,303.25	68,468,454.03	88,054,052.27	86,829,871.66
Less : Depreciation		9,080,094.45	10,825,520.77	13,069,043.31	17,286,685.34	20,833,361.66	24788046.24
NET BOOK VALUE		29,569,899.57	30,804,486.67	50,078,259.94	51,181,768.69	67,220,690.61	62,041,825.42

JICA/RSA

LEYTE IV ELECTRIC COOPERATIVE, INC.
Hilongos, Leyte

A: STATEMENT OF OPERATION	1991	1992	1993	1994	1995	1996
1. Utility Operating Revenues						
1.1 Operating Revenues	22,045,278	28,602,666	32,839,466	37,549,747	43,304,330	50,930,133
1.2 Other Operating Revenue				675,680	1,230,682	1,498,308
1.3 Total Operating Income						
2. Power Cost						
2.1 Power Production Cost	12,792,385	17,312,147	19,003,062	22,687,044	28,394,482	32,975,642
3. Non-Power Cost						
3.1 Dist. Expense - Operation	1,425,153	1,926,960	2,341,922	1,925,467	1,371,059	1,735,255
3.2 Dist. Expense - Maintenance	1,727,674	1,606,434	1,852,818	1,814,597	2,048,709	2,283,758
3.3 Consumers Accounts Expenses	1,073,403	1,547,340	1,755,441	2,086,405	2,102,481	2,911,162
3.4 Administrative & General Expenses	4,079,461	4,588,425	4,375,915	5,132,126	6,997,367	8,462,629
4. Total Operating & Maintenance Expenses	21,098,076	26,981,306	29,329,158	33,645,639	40,914,098	48,368,446
5. Operating Margin	947,202	1,621,360	3,510,308	4,579,788	3,620,914	4,059,995
6. Depreciation & Amortization Expenses	1,670,809	1,865,245	2,469,513	2,920,783	3,371,283	4,098,979
7. Interest Expenses	404,932	541,941	1,386,042	1,354,793	1,414,672	2,552,749
8. Net Operating Margin	(1,128,539)	(785,826)	(345,247)	304,212	(1,165,041)	(2,591,733)
9. Non-Operating Revenues	1,534,911	1,734,507	1,368,105	1,501,019	1,394,070	1,390,907
10. Non-Operating Expenses	260,670	289,531	297,027	259,910	109,234	112,285
11. Extraordinary Items						
12. NET MARGIN	145,702	659,150	725,831	1,545,321	119,795	(1,313,111)
B. FINANCIAL DATA						
Cash General Fund	1,045,157	1,151,787	1,520,724	2,300,424	2,650,295	2,539,943
Sinking Fund						
NEA Amortization	3,627	4,042	3,906	4,185	4,761	4,761
Reinvestment Fund (5%)			515,200	679,302	1,240,671	1,361,467
Accounts Receivable Energy						
Gross Receivable	1,810,014	1,998,563	1,934,785	2,219,650	3,217,306	3,597,420
Allowance for Uncollectibles				31,735	487,459	487,459
Net Receivables	1,810,014	1,998,563	1,934,785	2,187,915	2,729,847	3,109,961
Accounts Payable Power						
Current	1,080,099	1,486,408	1,711,993	1,881,458	2,564,769	3,212,991
Arrears						
3% Prompt Payment Disc. Avaled	318,021	507,171	563,171	675,640	831,335	969,823
Interest Charges						
Advances to Officers	72,109	94,004	25,231	54,382	47,011	43,591

C. STATISTICAL DATA						
KWH Purchased	8,099,761	9,873,428	10,849,872	11,582,404	13,672,842	15,498,416
KWH Sales	6,619,749	8,062,913	8,962,902	9,879,933	11,013,335	12,825,999
Coop Consumption	22,078	32,350	67,309	62,985	72,663	76,787
System Loss						
in KWH	1,480,012	1,778,165	1,819,661	1,639,486	2,586,844	2,595,630
in Peso Value	2,337,462	3,117,849	3,187,054	3,211,345	5,372,116	5,522,665
in %	18.27%	18.01%	16.77%	14.15%	18.92%	16.75%
Collection Efficiency						
Loan Amortization Payment (Current w/ Advance)						
Average System Rate	3.40	3.43	3.62	3.90	3.93	4.06
Average Power Cost						
Ratio of Consumers/Employees						
Total Number of Employees	87	103	97	96	99	100
Number on Consumers Served	22,213	21,073	28,679	23,466	25,261	27,033
Ratio	255	205	296	244	255	270
D. CONSUMER SALES & REVENUE DATA						
D.1 Consumers per class/type						
Residential	16,969	16,140	22,036	18,286	20,102	21,774
Commercial	3,005	2,701	3,813	2,622	2,672	2,685
Industrial	137	141	270	173	166	186
St. Lights/Sec. Lights	442	457	869	770	744	733
Public Buildings	933	926	641	551	599	693
BAPA	727	708	1,050	1,064	978	962
TOTAL	22,213	21,073	28,679	23,466	25,261	27,033
D.2 Sales in KWH						
Residential	2,847,091	13,185,644	4,354,650	4,954,564	5,841,145	7,329,939
Commercial	1,449,342	5,830,954	1,781,970	1,938,958	2,173,099	2,538,834
Industrial	354,681	1,545,095	461,680	534,605	371,006	380,437
St. Lights/Sec. Lights	234,899	466,449	133,457	114,281	119,609	110,124
Public Buildings	1,644,449	7,011,706	2,005,498	2,040,872	2,251,456	2,176,002
BAPA	89,287	555,667	225,647	296,653	257,020	290,663
TOTAL	6,619,749	28,595,515	8,962,902	9,879,933	11,013,335	12,825,999
D.3 Sales in Peso						
Residential	9,597,699	13,185,644	15,525,493	18,875,919	23,239,609	29,138,434
Commercial	4,886,893	5,830,954	6,363,275	7,374,221	8,605,581	10,081,705
Industrial	1,302,593	1,545,095	1,813,288	2,325,356	1,667,982	1,758,511
St. Lights/Sec. Lights	729,975	466,449	448,092	989,455	452,787	420,047
Public Buildings	5,245,030	7,011,706	6,889,964	6,934,056	8,382,646	8,446,706
BAPA	281,888	555,667	758,770	1,050,740	955,727	1,084,730
TOTAL	22,044,078	28,595,515	31,798,882	37,549,747	43,304,332	50,930,133

SOUTHERN LEYTE ELECTRIC COOPERATIVE, INC.
Maasin, Southern Leyte

A: STATEMENT OF OPERATIONS						
Description/Particulars	1991	1992	1993	1994	1995	Jan - Nov, 1996
1. Utility Operating Revenue						
1.1 Operating Revenue	24,066,080	31,467,116	35,344,668	34,066,090	43,361,575	50,494,016
1.2 Other Operating Revenue (N-1)	281,675	400,635	3,983,225	1,282,180	1,714,302	2,088,301
1.3 Total Operating Income	24,347,755	31,867,751	39,327,893	35,348,270	45,075,877	52,582,317
2. Power Cost						
2.1 Power Production Cost						
2.11 Genset	25,658					
2.12 Mini Hydro	472,287	510,638	578,137	652,508	718,399	96,480
2.2 Purchased Power	11,770,376	17,041,595	19,460,873	19,883,546	27,184,876	33,163,460
2.3 Total Cost of Power Produced/Purchased	12,268,321	17,552,233	20,039,010	20,536,054	27,903,275	33,259,940
3. Transmission Expense	10,208	26,232			95,587	
4. Distribution Expense						
4.1 Operation	500,333	812,174	1,091,628	953,401	1,525,850	1,769,424
4.2 Maintenance	1,283,328	1,748,661	1,633,280	1,404,054	1,937,234	2,462,981
4.3 Total Distribution Expense	1,783,661	2,560,835	2,724,908	2,357,455	3,463,084	4,232,405
5. Consumers Accounts Expense	2,264,331	2,544,796	2,631,504	2,687,118	2,997,104	2,980,538
6. Administrative & General Expense	2,728,604	3,659,725	4,685,112	5,683,407	5,918,911	6,545,503
7. Total Operating & Maintenance Expense	19,055,125	26,343,821	30,080,534	31,264,034	40,377,961	47,018,386
8. Operating Margin	5,292,630	5,523,930	9,247,359	4,084,236	4,697,916	5,563,931
9. Depreciation & Amortization Expense	1,823,489	2,152,425	2,501,580	2,852,767	4,238,573	4,919,522
10. Interest Expense	4,089,104	4,599,757	4,043,836	3,420,477	3,041,282	2,525,465
11. Net Operating Margin	(619,963)	(1,228,252)	2,701,943	(2,189,008)	(2,581,939)	(1,881,056)
12. Non-Operating Revenue	841,965	1,373,774	854,998	1,666,794	1,649,113	1,195,380
13. Non-Operating Expense	1,719	1,071	5,095	59,236	2,041	1,573
14. Extraordinary Items	1,895,757					
15. NET MARGIN	(1,675,474)	144,451	3,551,846	(581,450)	(934,867)	(687,249)
B: FINANCIAL DATA						
Cash General Fund	2,747,019	3,900,742	3,325,238	3,795,497	4,760,978	4,828,586
Sinking Fund:						
NEA Amortization	293,609	833,490	1,233,497	342,080	359,690	56,549
Reinvestment Fund (5%)	0	497,720	2,309,444	1,690,834	2,246,034	1,512,122
Accounts Receivable						
Gross Receivable	4,081,141	4,072,323	4,929,289	5,464,299	6,467,204	7,781,345
Allowance for Uncollectibles	1,077,448	1,391,905	1,568,542	1,738,794	1,955,409	2,207,852
Net Receivable	3,003,693	2,680,418	3,360,747	3,725,505	4,511,795	5,573,493
Accounts Payable Power						
Current	1,012,973	1,358,113	1,972,446	1,843,367	2,756,349	2,954,482
Arrears	0	0	0			
3% Prompt Payment Disc. Availed	327,618	500,894	565,396	601,186	776,876	1,003,573
Interest Charges	0				0	0
Advances to Officers & Employees	32,324	33,168	2,904	3,087	16,119	27,717

C: STATISTICAL DATA

Description/Particulars	1991	1992	1993	1994	1995	Jan - Nov, 1996
KWH Purchased	7,456,566	9,719,288	10,218,776	9,870,998	13,029,232	15,615,371
KWH Generated	1,696,040	1,484,680	1,614,000	618,750	402,100	0
Total	9,152,606	11,203,968	11,832,776	10,489,748	13,431,332	15,615,371
KWH Sales	7,160,713	8,815,459	9,417,558	8,696,540	10,768,059	12,481,640
Coop Consumption						
In KWH	74,444	85,868	77,342	79,092	81,504	81,725
In Peso Value	250,206	306,463	290,265	309,819	328,208	330,618
In %	0.81%	0.77%	0.65%	0.75%	0.61%	0.52%
Collection Efficiency	82.6%	94.6%	94.7%	94.0%	94.7%	93.5%
Loan Amortization Payment (Current with Advance)	1,250,000	3,081,875	2,789,327	2,040,479	2,332,241	3,362,330
Average System's Rate	3.3610	3.5690	3.7530	3.9172	4.0269	4.0455
Average Power Cost	1.3404	1.5666	1.6935	1.9577	2.0775	2.1299
Ratio of Consumers/Employees						
Total Number of Employees	113	118	118	158	129	128
Total Number of Consumers Served	18,551	20,432	21,824	22,805	24,472	25,769
Ratio	164 : 1	173 : 1	185 : 1	144 : 1	190 : 1	201 : 1

D: CONSUMER SALES & REVENUE DATA

D.1 Consumers per Class/Type						
Residential	17,656	19,399	20,686	21,623	23,158	24,340
Commercial	448	525	559	567	596	637
Industrial	1	5	5	6	5	5
Public Buildings	417	466	532	571	670	742
St. Lights/Sec. Lights	29	37	42	38	43	45
Water System						
BAPA						
Sale for Resale						
Total	18,551	20,432	21,824	22,805	24,472	25,769
D.2 Sales in KWH						
Residential	5,299,882	6,638,490	7,099,558	6,330,120	7,990,502	9,429,911
Commercial	1,093,680	1,318,729	1,484,513	1,443,943	1,622,692	1,741,136
Industrial	128,310	135,676	38,690	259,335	356,176	325,735
Public Buildings	472,656	625,398	690,154	582,319	714,784	829,311
St. Lights/Sec. Lights	87,925	97,166	104,643	80,823	83,905	91,287
Water System						
BAPA						
Sale for Resale	78,260					64,260
Total	7,160,713	8,815,459	9,417,558	8,696,540	10,768,059	12,481,640
D.3 Sales in Peso						
Residential	17,884,786	23,689,377	26,626,861	24,739,091	32,042,328	38,063,224
Commercial	3,695,989	4,733,598	5,611,154	5,712,664	6,655,986	7,185,716
Industrial	479,105	499,058	153,102	1,051,795	1,482,878	1,354,860
Public Buildings	1,582,132	2,206,745	2,571,556	2,253,862	2,851,150	3,338,719
St. Lights/Sec. Lights	294,235	338,338	381,995	308,678	329,233	364,012
Water System						
BAPA						
Sale for Resale	129,833					187,485
Total	24,066,080	31,467,116	35,344,668	34,066,090	43,361,575	50,494,016

fname: fs1–nov.

BILIRAN ELECTRIC COOPERATIVE, INC.
Caraycaray, Naval, Biliran

FINANCIAL ANALYSIS

A. STATEMENT OF OPERATION

DESCRIPTION/PARTICULARS	1991	1992	1993	1994	1995
1. Utility Operating Revenues					
1.1 Operating Revenues	9,773,264.45	11,611,571.35	15,136,705.47	17,411,563.92	22,773,481.41
1.2 Other Operating Revenues					
1.3 Total Operating Income	9,773,264.45	11,611,571.35	15,136,705.47	17,411,563.92	22,773,481.41
2. Power Cost					
2.1 Power Production Cost	5,585,727.44	7,165,489.64	9,180,268.18	9,404,019.03	11,809,634.40
3. Non Power Cost					
3.1 Distribution Expenses Operation	781,687.17	561,859.01	423,581.59	283,067.23	271,715.06
3.2 Distribution Expenses Maintenance	580,522.41	933,839.13	809,419.93	911,542.98	1,267,647.07
3.3 Consumer Account Expenses	616,022.12	689,096.63	688,630.69	766,736.32	875,404.71
3.4 Administrative & Gen. Expenses	2,155,354.58	2,273,280.80	2,515,193.36	2,543,621.34	3,582,146.23
3.5 Total Non Power Cost	4,133,586.28	4,458,075.57	4,436,825.57	4,504,967.87	5,996,913.07
4. Total Operating & Maint. Expenses	9,719,313.72	11,623,565.21	13,617,093.75	13,908,986.90	17,806,547.47
5. Operating Margin (Loss) (1–4)	53,950.73	(11,993.86)	1,519,611.72	3,502,577.02	4,966,933.94
6. Depreciation & Amortization Expenses	439,149.91	491,446.60	1,564,986.84	585,392.94	820,168.99
7. Interest Expenses	361,440.00	361,440.00	1,039,572.66	1,436,127.63	2,696,076.99
8. Net Operating Margin (Loss) (5–6 & 7)	(746,639.18)	(864,880.46)	(1,084,947.78)	1,481,056.45	1,450,687.96
9. Non Operating Revenue					
9.1 Housewiring	69,596.85	165,768.15	197,680.76	1,515,618.99	1,105,583.78
9.2 Others	426,790.02	619,236.80	946,738.86		
10. Non Operating Expenses					
10.1 Housewiring				10,880.00	14,250.00
10.2 Others					
11. Extra Ordinary					
12. Net Margin (Loss) (8 + 9 – 10 +11)	(250,252.31)	(79,875.51)	59,471.84	2,985,795.44	2,542,021.74

B. FINANCIAL DATA

Cash General Fund	151,880.71	1,029,926.01	990,549.17	842,448.68	414,120.70
Sinking Fund					
NEA Amortization					
Reinvestment Fund (5%)	0.00	0.00	145,864.69	557,312.91	815,231.30
Account Receivable energy					
Gross Receivable	1,073,314.31	1,368,608.19	1,841,495.53	2,033,152.66	2,752,331.14
Allowance for Uncollectibles	8,841.81	8,841.81	8,841.81	8,841.81	8,841.81
Net Receivables	1,082,156.12	1,359,766.38	1,832,653.72	2,024,310.85	2,743,489.33

BILIRAN ELECTRIC COOPERATIVE, INC.
Caraycaray, Naval, Biliran

FINANCIAL ANALYSIS

Account Payabel Power					
Current	432,849.67	615,517.40	764,828.97	885,201.86	1,212,843.63
Arrears					
3% Prompt Payment Disc. Availed	167,571.82	214,964.69	275,408.05	282,120.57	354,289.03
Interest Charges					
Advances to Officers & Employees	239,512.76	318,428.57	145,318.73	70,195.60	29,422.78
C. STATISTICAL DATA					
KWH Purchased	3,498,180	3,986,303	4,808,642	4,676,834	5,670,292
KWH Sales	2,727,838	3,098,987	3,523,800	3,563,691	4,501,808
Coop Consumption	8,983	12,803	16,047	10,910	11,288
System Loss					
In KWH	761,359	874,513	1,268,795	1,102,233	1,157,196
In Peso Value	2,629,459.66	3,222,831.49	5,391,118.85	5,234,423.58	5,703,442.56
In %	21.76%	21.94%	26.39%	23.57%	20.41%
Collection Efficiency	77.00%	75.00%	75.00%	82.79%	97.06%
Loan Amortization Payment	660,000.00	620,145.95	1,250,000.00	5,481,120.00	5,500,000.00
(Current with Advance)					
Average System Rate	3.4536	3.6853	4.2490	4.7489	4.9287
Average Power Cost	1.5968	1.7975	1.9091	2.0108	2.0827
Ration of Consumers/Employees					
Total No. of Employees	46	43	49	51	51
Number of Consumers Served	6,429	7,125	7,654	8,381	9,457
Ratio	139.76	165.70	156.20	164.33	185.43
D. CONSUMER SALES AND REVENUE DATE					
D.1 Consumers Per Class/type					
Residential	5,916	6,580	7,065	7,696	8,621
Commercial	410	430	464	498	535
Industrial				1	1
St. Light/Sec. Lights					43
Public Building	103	115	125	144	173
Water System					
BAPA				42	84
Total	6,429	7,125	7,654	8,381	9,457

BILIRAN ELECTRIC COOPERATIVE, INC.
Caraycaray, Naval, Biliran

FINANCIAL ANALYSIS

D.2 Sales in KWH					
Residential	1,921,090	2,317,017	2,697,776	2,623,049	3,369,604
Commercial	604,843	550,447	597,751	620,218	710,859
Industrial				30,967	6,087
St. Light/Sec. Lights	51,128	45,301	45,006	46,724	71,359
Public Building	150,777	186,222	183,267	241,648	330,590
Water System					
BAPA				1,085	13,309
Total	2,727,838	3,098,987	3,523,800	3,563,691	4,501,808
D.3 Sales in Peso					
Residential	6,605,747.54	8,520,826.62	11,426,743.24	12,532,492.97	16,608,228.22
Commercial	2,129,935.70	2,057,262.12	2,573,787.31	2,841,943.06	3,542,937.62
Industrial				154,090.51	30,071.42
St. Light/Sec. Lights	168,500.82	152,050.63	188,492.65	229,351.46	326,488.81
Public Building	516,785.51	680,517.49	783,627.70	1,160,645.29	1,615,773.65
Water System					
BAPA				3,183.60	64,447.13
Total	9,420,969.57	11,420,656.86	14,972,650.90	16,923,706.89	22,187,946.85

EASTERN SAMAR ELECTRIC COOPERATIVE, INC.
(ESAMELCO)
Brgy. Cabong, Borongan, Eastern Samar

	1991	1992	1993	1994	1995	1996
Financial Data:						
Cash General Fund	390.089	657.854	315.578	1.185.525	42.065	366.356
Sinking Fund:						
NEA Amortization	218.548	208.880	127.027	366.265	846.524	274.109
Reinvestment Fund	-	-	284.018	403.640	1.579.721	530.925
Accounts Receivable Energy:						
Gross	2.311.246	3.256.440	3.256.440	4.290.575	6.669.313	10.813.524
Allow. for Uncollectible Acounts	132.082	132.082	132.082	132.082	132.082	132.082
Net Receivables	2.179.164	2.514.466	3.124.358	4.158.493	6.537.231	10.681.442
Accounts Payable Power						
Current	-	-	-	1,615.134	722.196	2.345.594
Arrears	1.438.863	978.684	3.358.237			
3% prompt payment discount availed					453.626	672.196
Advances to Officers & Employees	318.489	295.379	255.655	268.838	124.769	250.285
Statistical Data:						
KWH Purchased	5.010.465	5.595.175	7.190.030	8.076.865	9.613.824	11.938.956
KWH Sales	4.113.470	4.533.411	5.634.036	6.181.011	7.915.355	9.898.225
Coop Consumption	23.227	36.819	56.937	55.937	59.457	49.693
System Loss						
KWH	873.868	1.024.945	1.499.201	1.839.917	1.639.012	1.991.038
Peso Value	1.380.711	1.865.400	2.863.474	3.606.237	3.196.073	4.121.449
%	17%	18%	21%	23%	17%	17%
Collection Efficiency						
Loan Amortization Payment	765.000	1.200.000	511.405	1.557.381	3.850.000	4.500.000
Ave. System Rate	3.44	4.23	4.09	4.20	4.33	4.40
Ave. Power Cost	1.58	1.82	1.96	1.96	1.95	2.07
Ratio of Consumer per employee						
Total no. of employees	77	86	83	100	118	114
No. of consumers	8.061	9.292	10.284	10.863	13.013	14.888
Ratio	104	108	123	108	110	130

	1991	1992	1993	1994	1995	1996
Revenue Data						
Consumer per class						
Residential	7.320	8.367	9.242	9.804	11.289	12.929
Commercial	546	708	786	764	813	802
Industrial	39	52	40	38	53	60
St. Lights	23	36	55	73	125	179
Public Buildings	133	129	161	184	234	268
BAPA					499	650
Total	8.061	9.292	10.284	10.863	13.013	14.888
Sales in KWH						
Residential	2.861.334	3.174.260	3.800.805	4.123.694	5.226.742	6.812.153
Commercial	666.383	836.735	1.101.640	1.065.903	1.200.781	1.381.589
Industrial	148.888	86.017	189.243	378.507	431.170	491.555
St. Lights	73.217	85.336	138.712	181.066	302.477	355.852
Public Buildings	363.648	351.063	403.636	431.841	584.987	649.330
BAPA	-	-	-	-	169.198	207.746
Total	4.113.470	4.533.411	5.634.036	6.181.011	7.915.355	9.898.225
Sales in Pesos						
Residential	9.582.429	12.604.459	15.342.721	17.094.674	22.469.533	29.826.840
Commercial	2.443.232	3.346.412	4.652.243	4.664.316	5.408.432	6.293.982
Industrial	545.499	317.123	776.620	1.589.604	1.764.907	2.172.940
St. Lights	277.798	335.226	613.273	799.883	1.287.058	1.765.086
Public Buildings	1.318.045	1.389.251	1.667.744	1.825.993	2.613.895	2.600.950
BAPA	-	-	-	-	727.244	907.970
Other Electric Revenue	559.600	83.463	656.440	691.991	828.975	613.899
Total	14.726.603	18.075.942	23.709.041	26.666.461	35.100.044	44.181.667

Figure 5.1.1-1 Transmission System in Leyte and Samar Islands

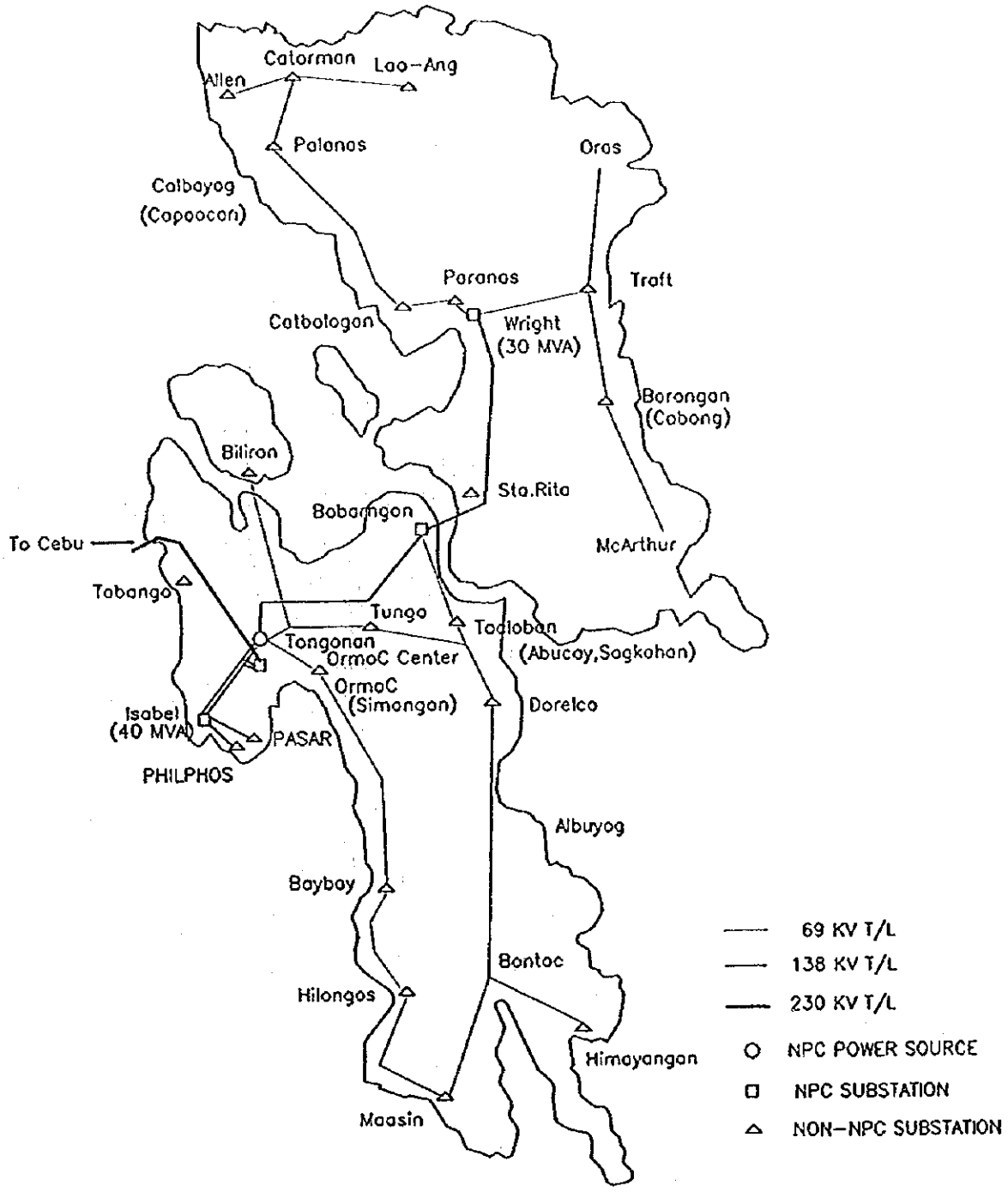

Figure 5.1.1-2 Single Line Diagram in Leyte and Samar Islands

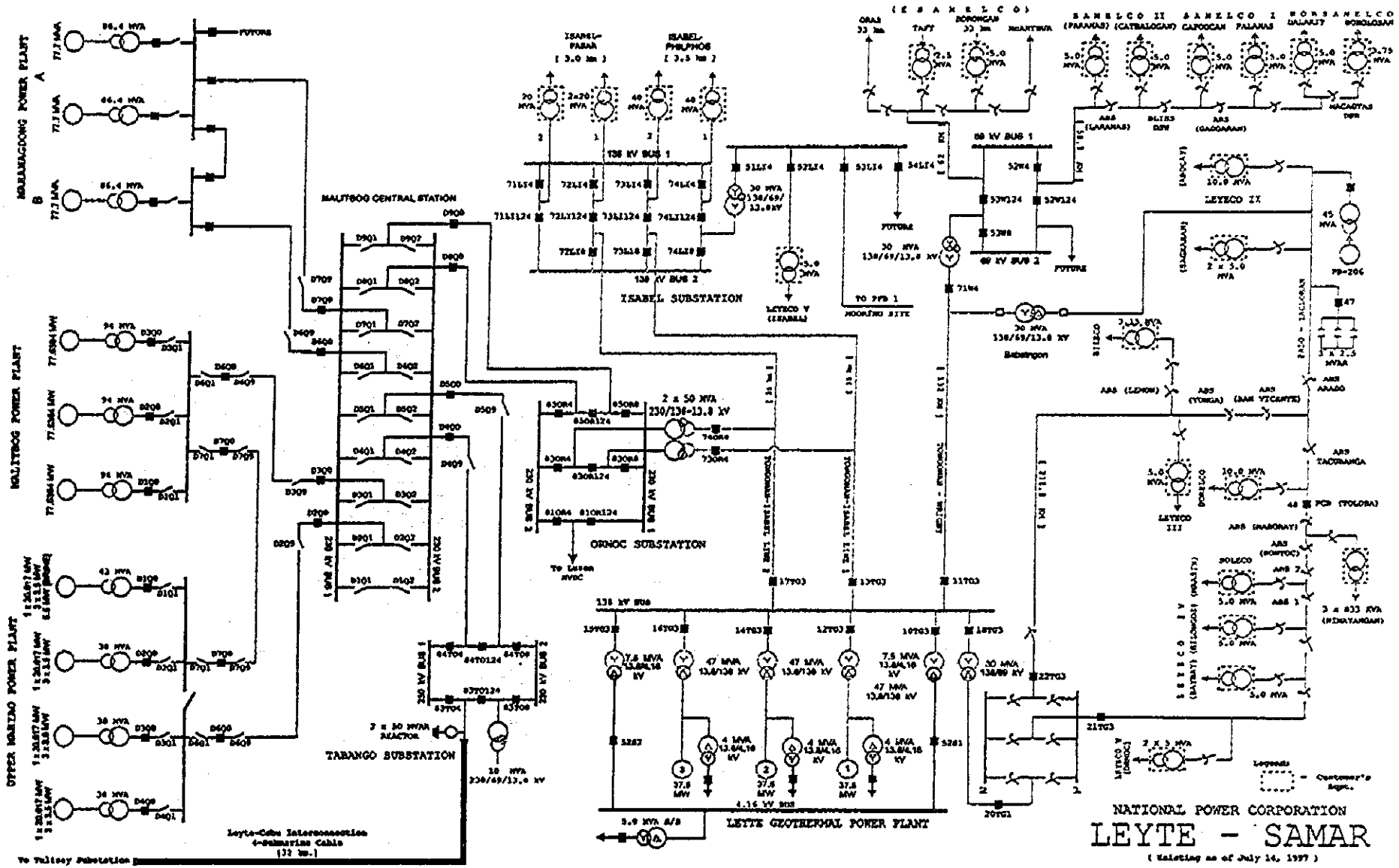

Appendix 5.1.1-1 Branch Existing Data for Leyte-Samar Grid

From	To	kV	Type of Structure	No. of Structure	No. & Size of Cond.	Length (km)	Rating (MVA) A	B	Year Comm.
Tongonan I	Babatngon	138	SC-WP		1-336.4MCM	73	105	137	1987
Babatngon	Wright	138	SC-WP		1-336.4MCM	58.5	105	137	1987
Tongonan I	Leyte Tap1	138	SC-WP	236	1-336.4MCM	5	105	137	1981
Leyte Tap1	Isabel	138	SC-WP		1-336.4MCM	29.5	105	137	1981
Tongonan I	Leyte Tap2	138	SC-WP	231	1-336.4MCM	5	105	137	1984
Leyte Tap2	Isabel	138	SC-WP		1-336.4MCM	30.5	105	137	1984
Ormoc	Leyte Tap1	138	DC-ST		1-454SQMM	6	212	275	1996
Ormoc	Leyte Tap2	138	DC-ST		1-454SQMM	6	212	275	1996
Isabel	Pasar	138	2-SC-WP	13	1-336.4MCM	3.4	105	137	1992
Isabel	Philphos	138	2-SC-WP	41	1-336.4MCM	3.5	105	137	1983
Tongonan I	Limon	69	SC-WP	336	1-336.4MCM	14.7	53	68	1991
Limon	Tunga	69	SC-WP		1-336.4MCM	29.5	53	68	1991
Tongonan I	Ormoc	69	SC-WP	150	1-336.4MCM	19.6	53	68	1977
Limon	Biliran	69	SC-WP	170	1-336.4MCM	27	53	68	1988
Tunga	Palo-Tap	69	SC-WP	186	1-336.4MCM	28	53	68	1979
Palo-Tap	Tacroban	69	SC-WP	84	1-336.4MCM	14	53	68	1979
Palo-Tap	Tolosa	69	SC-WP	126	1-336.4MCM	19	53	68	1979
Tacroban	PBGTMT6	69	SC-WP		1-336.4MCM	3	53	68	
Tacroban	Babatngon	69	SC-WP		1-336.4MCM	14.4	53	68	1996
Tolosa	Mabhay	69	SC-WP	334	1-336.4MCM	61	53	68	1979
Mabhay	Bontoc	69	SC-WP	113	1-336.4MCM	25	53	68	1980
Bontoc	St. Bernard	69	SC-WP	305	1-336.4MCM	43	53	68	1996
Bontoc	Maasin	69	SC-WP	147	1-336.4MCM	30	53	68	1980
Maasin	Baybay	69	SC-WP	653	1-336.4MCM	75	53	68	1996
Baybay	Ormoc	69	SC-WP	433	1-336.4MCM	51	53	68	1985
Isabel	PB Isabel	69	SC-WP	88	1-336.4MCM	12.1	53	68	1981
Wright	Calbayog	69	SC-WP	625	1-336.4MCM	68	53	68	1989
Wright	Taft	69	SC-WP	421	1-336.4MCM	60	53	68	1989
Calbayog	Catarman	69	SC-WP	444	1-336.4MCM	67	53	68	1989
Catarman	Catubig	69	SC-WP	550	1-336.4MCM	62	53	68	1990
Catarman	Allen	69	SC-WP		1-336.4MCM	42.8	53	68	1995
Taft	Oras	69	SC-WP	297	1-336.4MCM	33.2	53	68	1990
Taft	Borongan	69	SC-WP	448	1-336.4MCM	33	53	68	1993
Borongan	Mcarthur	69	SC-WP	635	1-336.4MCM	72	53	68	1994

Figure 5.1.2-1 Secondary side Single Line Diagram of Isabel 138/69 kV Substation

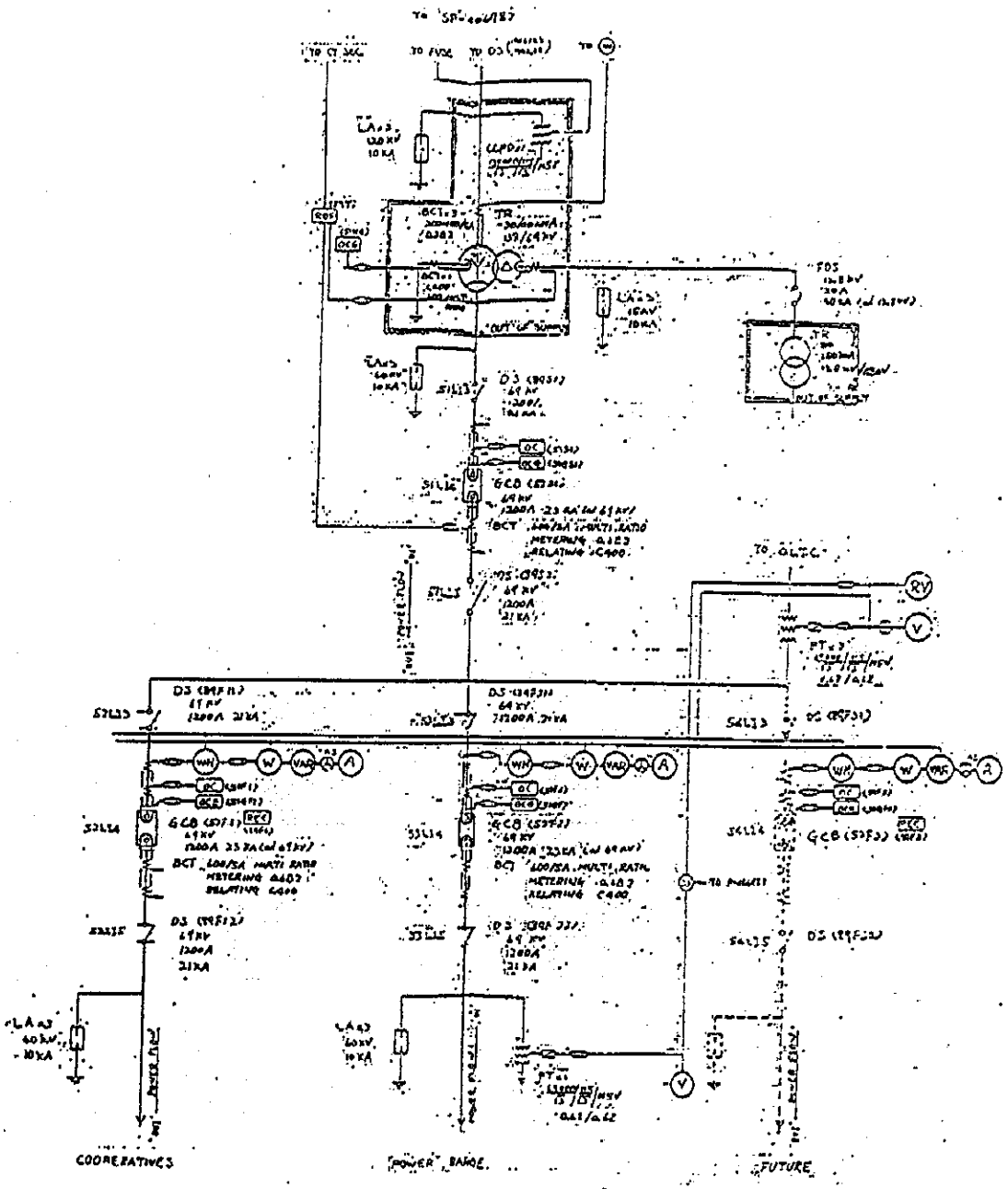

Figure 5.1.2-2 Single Line Diagram of Wright 138/69 kV Substation

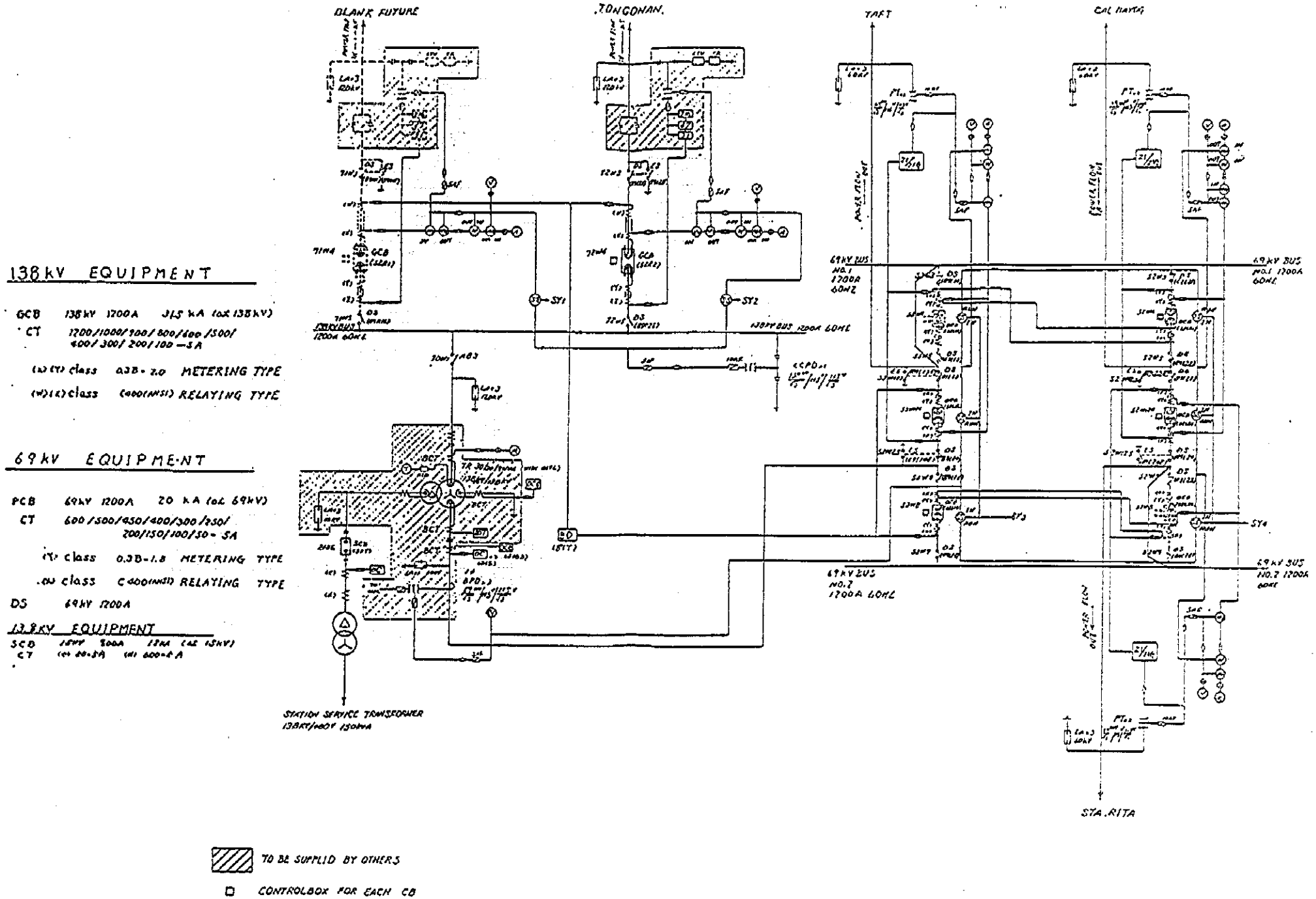

Appendix 5.1.2-1 Outline of 69/13.2 kV Substation Data

Name of EC	Name of Sub-station	Location	Voltage (kV)	Capacity	Power Fuse Rating	Year Installed	No. of Feeder	Capacitor Bank
Leyeco I	Dorelco	San Roque, Tolosa	67/13.2Y/7.62	10 MVA		Feb. 1982	2 feeders	
Leyeco II	Sagcahan	Sagkahan, Tacloban City	67/13.2Y/7.62	5 MVA		1979	1 feeder	
	Sagcahan	Sagkahan, Tacloban City	67/13.2Y/7.62	5 MVA		June 1990	2 feeders	
	Abucay	Abucay	67/13.2Y/7.62	10 MVA		Dec. 1992	3 feeders	
Leyeco III	Tunga	Brgy. San Roque, Tunga	67/13.2Y/7.62	5 MVA	3-69 kV 65E, 3-13.2kV 200A	1982	1 feeder	3-50 kVar
Leyeco IV	Baybay	Brgy. Gaas, Baybay	67/13.2Y/7.62	3.75 MVA	3-69 kV 65E, 6-13.2kV 175E	March 1988	2 feeders	
	Hilongos	Brgy. Gaas, Baybay	67/13.2Y/7.62	5 MVA	3-69 kV 65E, 6-13.2kV 175E	Aug. 1996	2 feeders	
Leyeco V	Simangan I	Brgy. San Pablo, Ormoc	67/13.2Y/7.62	5 MVA	3-69 kV 65E, 6-13.2kV 175A	Oct. 1992	2 feeders	3-150 kVar, 3-50 kVar
	Simangan II	Brgy. San Pablo, Ormoc	67/13.2Y/7.62	5 MVA	3-69 kV 65E, 6-13.2kV 175A	Feb. 1993	2 feeders	6-300 kVar
	Mahayag	Isabel, Leyte	67/13.2Y/7.62	5 MVA	3-69 kV 65E, 6-13.2kV 175A	May 1982	2 feeders	3-100 kVar, 6-50 kVar
	Simangan III	Brgy. San Pablo, Ormoc	69/13.8Y/7.96	12 MVA	3-69 kV 90E, 3-13.2kV 175A	On going	1 feeder	
	Leyte-Leyte	Leyte- Leyte	67/13.2Y/7.62	5 MVA	3-69 kV 65E, 6-13.2kV 175A	On going	2 feeders	
Soleco	Maasin	Nasaug HQ., Maasin	67/13.2Y/7.62	5 MVA		Jan. 1987	3 feeders	
	Himay-Angan		67/13.2Y/7.62	5 MVA			3 feeders	
Bileco	Biliran	Brgy. San Isidre	69/13.2Y/7.62	3.15 MVA	3-69kV 30E	May 1988	2 feeders	-
Samelco I	Capoocan	Brgy. Capoocan, Calbayog	67/13.2Y/7.62	5 MVA		Apr. 1989	3 feeders	
	Palanas	Palanas Cara, Calbayog	67/13.2Y/7.62	5 MVA		Dec. 1996	2 feeders	
Samelco II	Paranas	Brgy. Arado, Paranas	69/13.2Y/7.62	5 MVA	3-69 kV 65A, 6-13.2kV 175A	Feb. 1989	2 feeders	9-50 kVar, 3-100 kVar
	Catbalogan	Km1, Catbalogan	67/13.2Y/7.62	5 MVA	3-69 kV 65A, 6-13.2kV 175A	Aug. 1995	2 feeders	6-100 kVar, 3-50 kVar
	Dolongan	Brgy. Dolongan, Basey	67/13.2Y/7.62	5 MVA		1998		
Esamelco	Taft	Brgy. Polangi, Taft	67/13.2Y/7.62	2.5 MVA	3-69 kV 30E, 6-13.2kV 175A	Jan. 1986	2 feeders	
	Cabong	Brgy. Cabong, Bor.	67/13.2Y/7.62	5 MVA	3-69 kV 65E, 6-13.2kV 200E	Oct. 1994	2 feeders	
	Buenavista	Brgy. Buenavista, Quinapon	67/13.2Y/7.62	2.5 MVA		Unfinished	3 feeders	
	Oras	Brgy. Burak, Oras.	67/13.2Y/7.62	2.5 MVA		Unfinished	2 feeders	
Norsamelco	Catarman	Brgy. Dalakit, Catarman	67/13.2Y/7.62	5 MVA	3-69kV 50A, 6-13.2kV 175A	Sep. 1995	2 feeders	3-100 kVar, 3-50 kVar
	Lao-Ang	Brgy. Bobolosan, Lao-Ang	67/13.2Y/7.62	3.75 MVA	3-69kV 45A, 6-13.2kV 150A	Oct. 1996	2 feeders	

Figure 5.1.2-3 Representative Single Line Diagram of 69/13.2 kV Substation

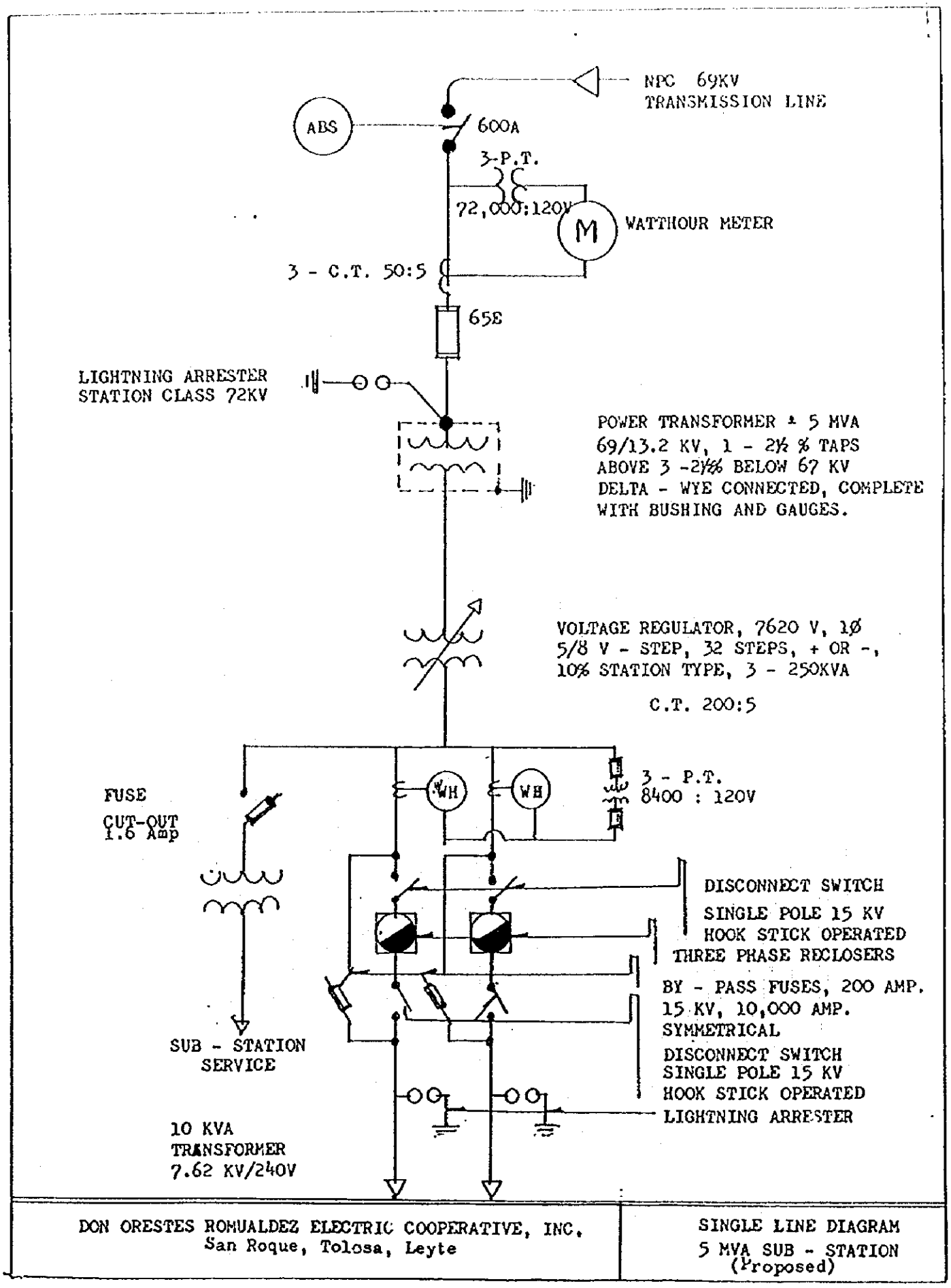

DON ORESTES ROMUALDEZ ELECTRIC COOPERATIVE, INC. San Roque, Tolosa, Leyte	SINGLE LINE DIAGRAM 5 MVA SUB - STATION (Proposed)

Appendix 5.1.3-1 Existing Distribution Line Data in each Ecs (1)

Name of EC	Line Circuit	Voltage	Wire	Length in kms.	No. of Structure	Kind of Tower/poles
Leyeco I	Three Phase	13200	ACSR	127.58	1,501	Wood Poles
	Two Phase	13200	ACSR	51.3	616	Wood Poles
	Single Phase	7620	ACSR	239.28	2,815	Wood Poles
	Open Sec.	240	ACSR	139.57	4,561	Wood Poles
	Underbuilt	240	ACSR	228		Wood Poles
	Total			785.73	9,493	
Leyeco II	Double Circuit	13200	ACSR	1.8		Wood Poles
	Three Phase	13200	ACSR	62.7626		Wood Poles
	Two Phase	13200	ACSR	23.7		Wood Poles
	Single Phase	7620	ACSR	100.8325		Wood Poles
	Open Sec.	240	ACSR	86.6761		Wood Poles
	Underbuilt	240	ACSR	107.2649		Wood Poles
	Total			383.0361	0	
Leyeco III	Three Phase	13200	ACSR	91.681		Wood Poles
	Two Phase	13200	ACSR	37.471		Wood Poles
	Single Phase	7620	ACSR	146.797		Wood Poles
	Open Sec.	240	ACSR	146.98		Wood Poles
	Underbuilt	240	ACSR	139.18		Wood Poles
	Total			562.109	0	
Leyeco IV	Double Circuit	13200	ACSR	0.62	6	
	Three Phase	13200	ACSR	91.33	1,075	Wood Poles
	Two Phase	13200	ACSR	8.25	97	Wood Poles
	Single Phase	7620	ACSR	185.5	2,226	Wood Poles
	Open Sec.	240	ACSR	123.99	1,478	Wood Poles
	Underbuilt	240	ACSR	199.155		Wood Poles
	Total			608.845	4,882	

Appendix 5.1.3-1 Existing Distribution Line Data in each Ecs (2)

Name of Coop	Line Circuit	Voltage	Wire	Length in kms.	No. of Structure	Kind of Tower/poles
Leyeco V	Three Phase	13200	ACSR	236.806	2,842	Wood Poles
	Two Phase	13200	ACSR	26.289	315	Wood Poles
	Single Phase	7620	ACSR	333.451	3,996	Wood Poles
	Open Sec.	240	ACSR	161.499	2,423	Wood Poles
	Underbuilt	240	ACSR	952.531		Wood Poles
	Total			1710.576	9,576	
Soleco	Double Circuit	13200	ACSR	2.285	40	Wood Poles
	Three Phase	13200	ACSR	268.763	2,850	Wood Poles
	Two Phase	13200	ACSR	12.972	116	Wood Poles
	Single Phase	7620	ACSR	111.855	1,250	Wood Poles
	Open Sec.	240	ACSR	160.012	1,655	Wood Poles
	Underbuilt	240	ACSR	201.362		Wood Poles
	Total			757.249	5,911	
Bileco	Three Phase	13200	ACSR	106.885	1,060	Wood Poles
	Two Phase	13200	ACSR	5.162	16	Wood Poles
	Single Phase	7620	ACSR	45.726	278	Wood Poles
	Open Sec.	240	ACSR	46.894	506	Wood Poles
	Underbuilt	240	ACSR	51.192		Wood Poles
	Total			256	1,860	
Samelco I	Three Phase	13200	ACSR	125.559		Wood Poles
	Two Phase	13200	ACSR	35.148		Wood Poles
	Single Phase	7620	ACSR	85.2183		Wood Poles
	Open Sec.	240	ACSR	85.1363		Wood Poles
	Underbuilt	240	ACSR	61.049		Wood Poles
	Total			392.1106	0	

Appendix 5.1.3-1 Existing Distribution Line Data in each Ecs (3)

Name of Coop	Line Circuit	Voltage	Wire	Length in kms.	No. of Structure	Kind of Tower/poles
Samelco II	Three Phase	13200	ACSR	248.1	2,593	Wood Poles
	Two Phase	13200	ACSR	107.155	653	Wood Poles
	Single Phase	7620	ACSR	200.927	1,357	Wood Poles
	Open Sec.	240	ACSR	203.134	1,566	Wood Poles
	Underbuilt	240	ACSR			Wood Poles
	Total			759.316	6,169	
Esamelco	Double Circuit	13200	ACSR	0.22		Wood Poles
	Three Phase	13200	ACSR	224.044		Wood Poles
	Two Phase	13200	ACSR	27.103		Wood Poles
	Single Phase	7620	ACSR	66.661		Wood Poles
	Open Sec.	240	ACSR	82.437		Wood Poles (Including 5 steel poles)
	Underbuilt	240	ACSR	122.498		Wood Poles
	Total				0	
Norsamelco	Three Phase	13200	ACSR	228.2	3,066	Wood Poles
	Two Phase	13200	ACSR	8.27	150	Wood Poles
	Single Phase	7620	ACSR	41.69	542	Wood Poles
	Open Sec.	240	ACSR	78.65	1,000	Wood Poles
	Underbuilt	240	ACSR	76.88		Wood Poles
	Total			433.69	4,758	

Figure 5.2.2-1 Telecommunications Networks in Visayas Area

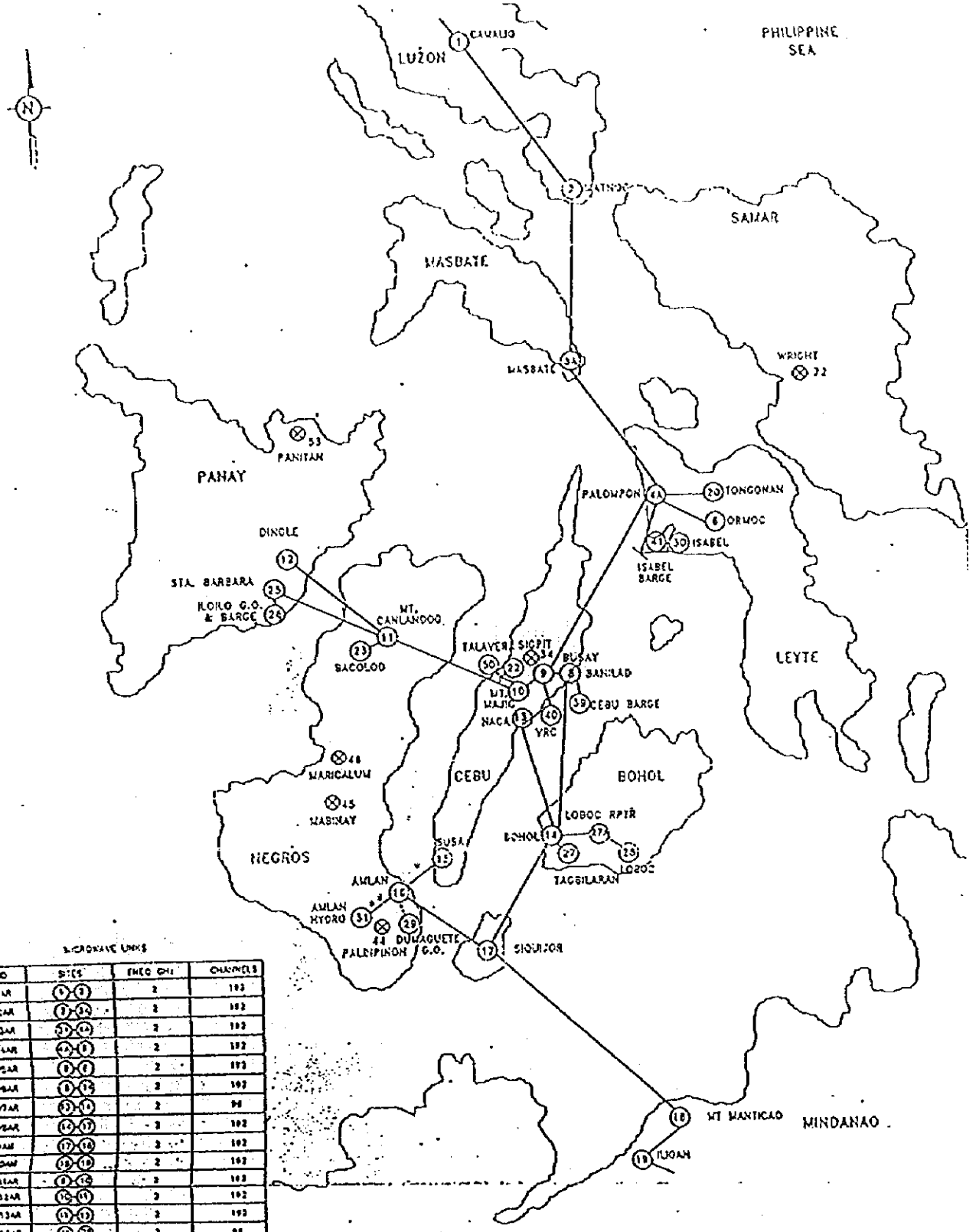

MICROWAVE LINKS

PATH ID	SITES	FREQ GHz	CHANNELS
NPCVS1AR	9-3	2	192
NPCVS2AR	9-34	2	192
NPCVS3AR	34-44	2	192
NPCVS4AR	44-8	2	192
NPCVS5AR	8-6	2	192
NPCVS6AR	8-15	2	192
NPCVS7AR	33-14	2	96
NPCVS8AR	14-17	2	192
NPCVS9AR	17-18	2	192
NPCVS10AR	18-19	2	192
NPCVS11AR	9-10	2	192
NPCVS12AR	10-11	2	192
NPCVS13AR	11-12	2	192
NPCVS14AR	11-35	2	96
NPCVS15AR	35-24	2	24
NPCVS16AR	11-25	2	24
NPCVS17AR	11-36	2	96
NPCVS18AR	44-8	2	192
NPCVS19AR	37-38	2	96
NPCVS20AR	38-39	2	96
NPCVS21AR	39-37	2	96
NPCVS22AR	44-11-36	2	24
NPCVS23AR	10-35-25	2	24
NPCVS24AR	9-46	2	96

* OTHER CONTRACT

** TO BE RELOCATED FROM A BARGE LINK AT A LATER DATE

OPTICAL FIBER LINKS

PATH ID	SITES	FREQ GHz	CHANNELS
NPCVO 1	16-35	0.4	1
NPCVO 2	16-37	0.4	1
NPCVO 3	37-27-16	0.4	1
NPCVO 4	43-35	0.4	1
NPCVO 5	9-39	0.4	1

⊗ PBX SITES

WRIGHT
SIGPIT
PANITAN
MARICALUM (RECTIFIER ONLY)
MABINAY
PALINPINON

Figure 5.2.3-1 Calculation Result of Power Flow in Leyte-Samar Area

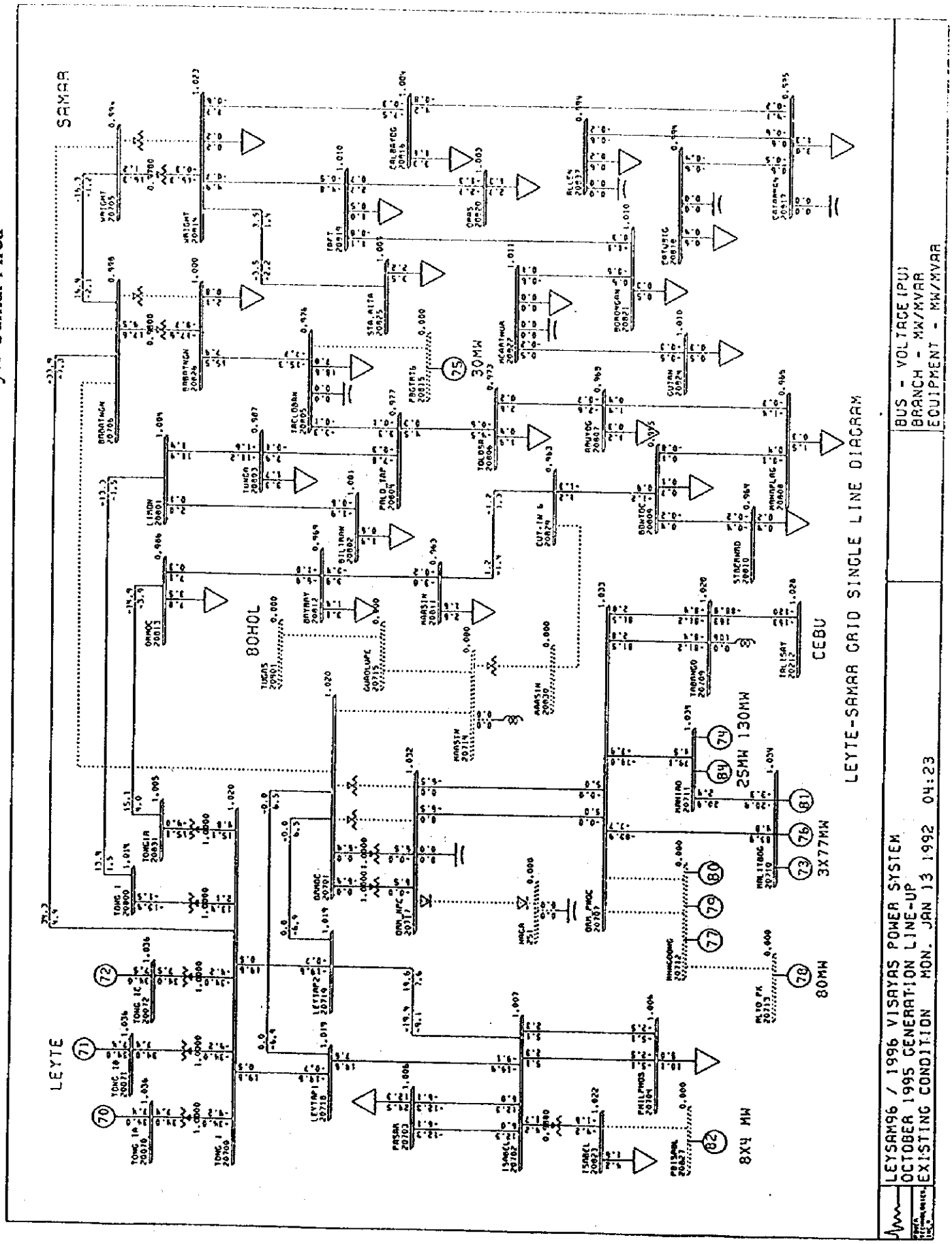

Appendix 5.3-1 Power System Loss (%) of Distribution System in each Ecs

Name of Company	1986	1987	1988	1989	1990	1991	1992	1993	1994	1995	1996
NPC	3.30	3.20	3.80	3.10	3.10	2.90	2.30	2.40	1.60	2.70	
Leyeco I	10.00	11.00	33.00	21.00	18.50	18.55	24.17	28.44	26.22	20.27	22.35
Leyeco II	29.27	28.57	28.94	32.62	31.00	32.61	30.68	31.67	31.84	24.78	18.15
Leyeco III					23.11	25.86	25.76	24.57	22.31	30.45	17.35
Leyeco IV	10.01	18.58	13.35	15.57	11.69	18.00	17.89	16.77	13.42	18.94	15.90
Leyeco V	12.40	14.98	17.77	17.80	15.96	15.54	15.60	13.90	13.07	15.64	12.87
Soleco	25.62	24.02	18.93	19.42	17.19	20.95	20.55	19.76	18.22	19.63	19.21
Bilcco					20.91	21.74	22.88	26.39	26.79	23.77	21.79
Samelco I			13.32	13.42	9.79	10.67	12.64	11.34	10.09	10.17	9.84
Samelco II	24.38	25.75	30.35	28.33	24.16	23.25	22.68	20.95	22.14	20.47	15.84
Esamelco					22.29	17.44	18.35	23.02	23.96	17.33	20.40
Norsamelco					20.30	20.65	22.17	21.73	19.07	19.86	16.88

Appendix 5.4-1 Power Outage (hours) in each Ecs

Name of EC	Cause	1987	1988	1989	1990	1991	1992	1993	1994	1995	1996	Total	Average
Leyeco I	NPC	278.52	763.70	357.63	619.79	279.89	394.14	295.05	285.00	239.03	505.63	4018.38	401.84
	EC	205.01	1277.66	668.80	3567.70	499.43	1035.11	641.76	689.50	508.42	1156.19	10249.58	1024.96
Leyeco II	NPC			567.46	125.80	9.40	336.47	317.39	405.37	405.37	334.88	2502.14	312.77
	EC			153.70	9.30	37.85	40.42	127.39	375.69	375.69	316.29	1436.33	179.54
Leyeco IV	NPC		133.46	181.20	161.20	96.02	211.41	276.29	434.37	323.85	265.85	2083.65	231.52
	EC		371.77	78.00	330.20	417.33	22.30	40.47	25.98	55.51	57.41	1398.97	155.44
Leyeco V	NPC							47.55	113.85	257.85	47.06	466.31	116.58
	EC							188.25	426.30	410.65	460.65	1485.85	371.46
Soleco	NPC					465.00	839.00		953.00	590.00		2847.00	711.75
	EC					367.00	486.00		522.00	462.00		1837.00	459.25
Bileco	NPC								305.56	463.97	262.15	1031.68	343.89
	EC								595.22	263.63	205.09	1063.94	354.65
Samelco I	NPC							347.53	778.58	1261.91	735.51	3123.53	780.88
	EC							123.97	173.94	206.98	75.90	580.79	145.20
Samelco II	NPC			221.46	267.96	242.28		86.84	143.56	414.55	153.58	1530.23	218.60
	EC			27.04	31.43	48.05		30.22	27.76	21.55	38.66	224.71	32.10
Norsamelco	NPC									134.10	149.11	283.21	141.61
	EC									1864.09	1131.43	2995.52	1497.76

Appendix 5.4-2 Power Outage (frequency) in each Ecs

Name of EC	Cause	1987	1988	1989	1990	1991	1992	1993	1994	1995	1996	Total	Average
Leyeco IV	NPC		30	21	30	41	38	33	29	30	31	283	31
	EC		21	20	25	27	22	28	28	28	16	215	24
Leyeco V	NPC							35	53	48	48	184	46
	EC							27	108	140	173	448	112
Samelco I	NPC							265	308	392	351	1316	329
	EC							87	89	120	77	373	93
Norsamelco	NPC									16	21	37	19
	EC									431	391	822	411

Figure 5.6.1-1 Power System Development Map in Visayas Grids

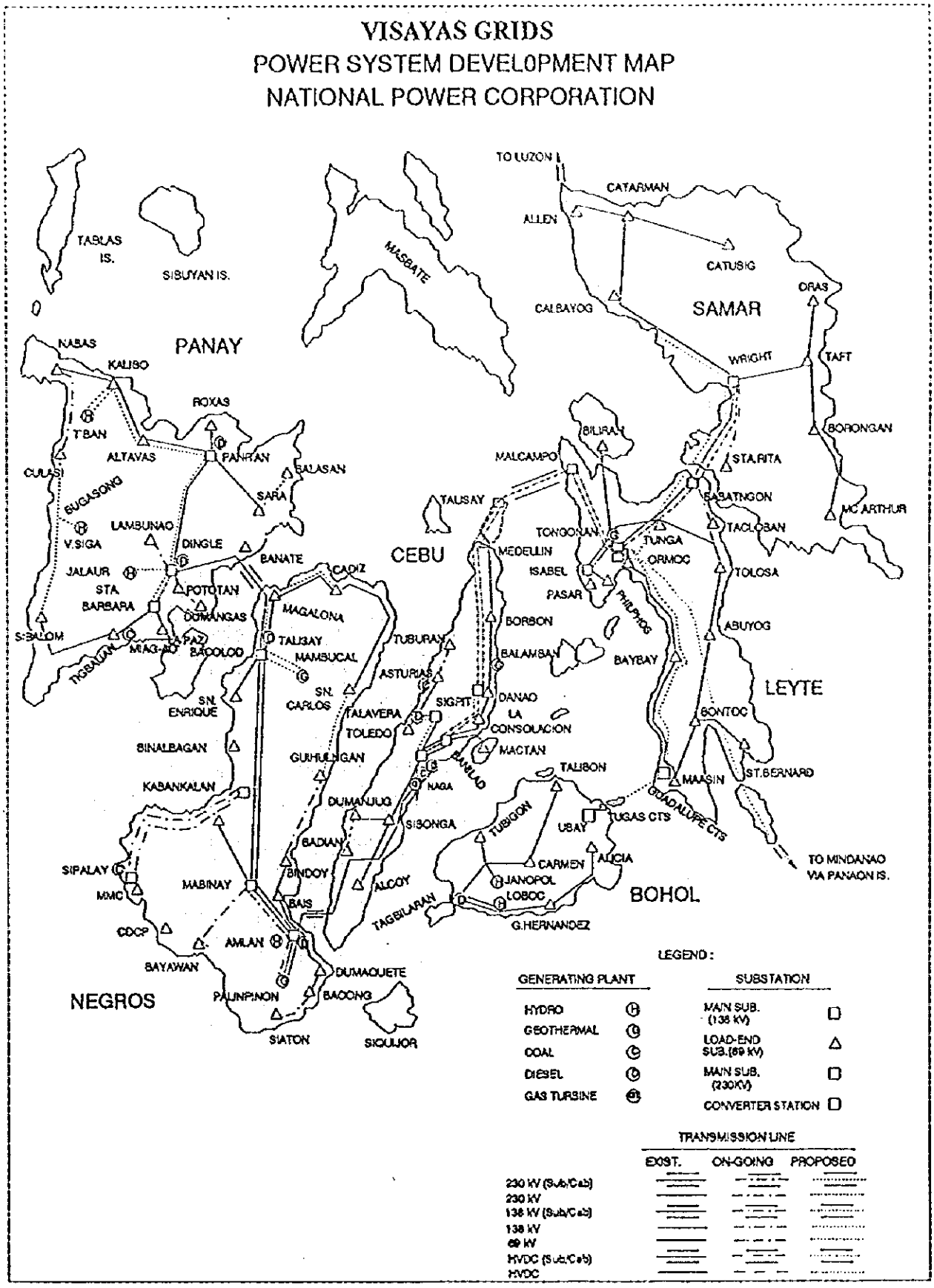

Appendix 5.9-1 Bracing and base reinforcing work

I. Preparations

1. Bracing at the top

(1) Braces for wooden poles

Braces for wooden poles are as shown in Figure 1.

Figure 1 Braces for wooden poles

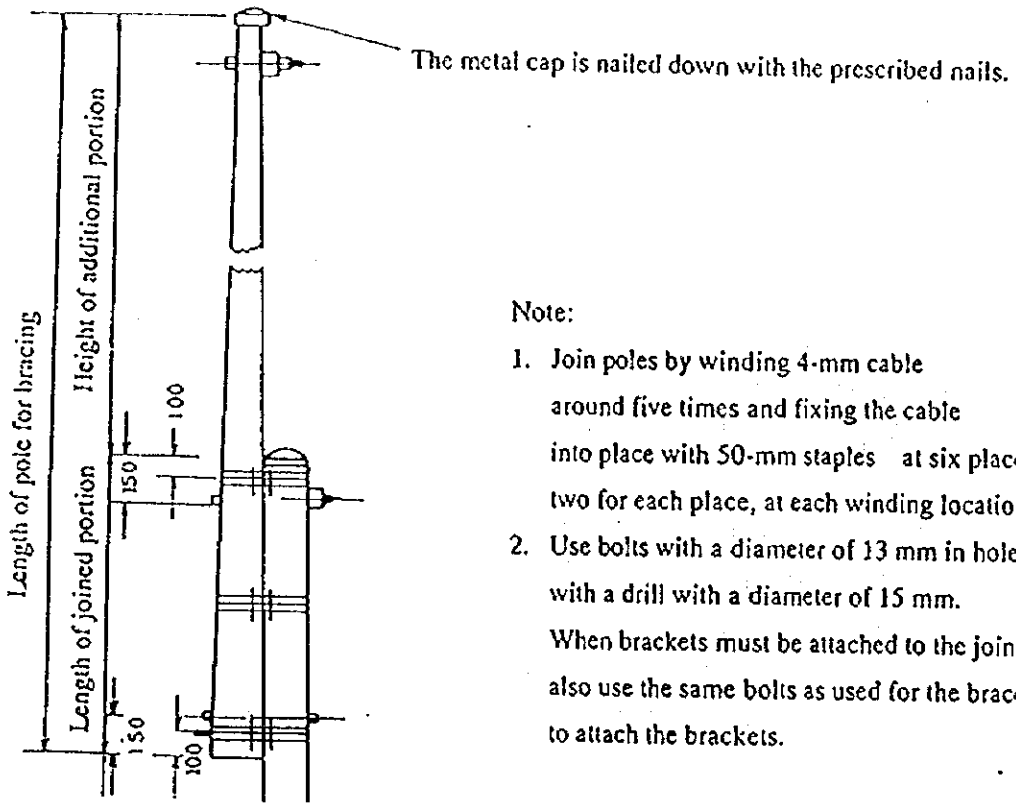

Note:

1. Join poles by winding 4-mm cable around five times and fixing the cable into place with 50-mm staples at six places, two for each place, at each winding location.
2. Use bolts with a diameter of 13 mm in holes opened with a drill with a diameter of 15 mm. When brackets must be attached to the joined portion, also use the same bolts as used for the brace to attach the brackets.

Main supplies

Item	Number
Bracing wooden pole	1
Bolt	2
Zinc-plated cable	
Metal cap	1

2. Base reinforcement

(1) Base reinforcement for wooden poles is as shown in Figure 2.

Figure 2 Method of base reinforcement

a. Ordinary case

b. Case of severe deterioration (rotting)

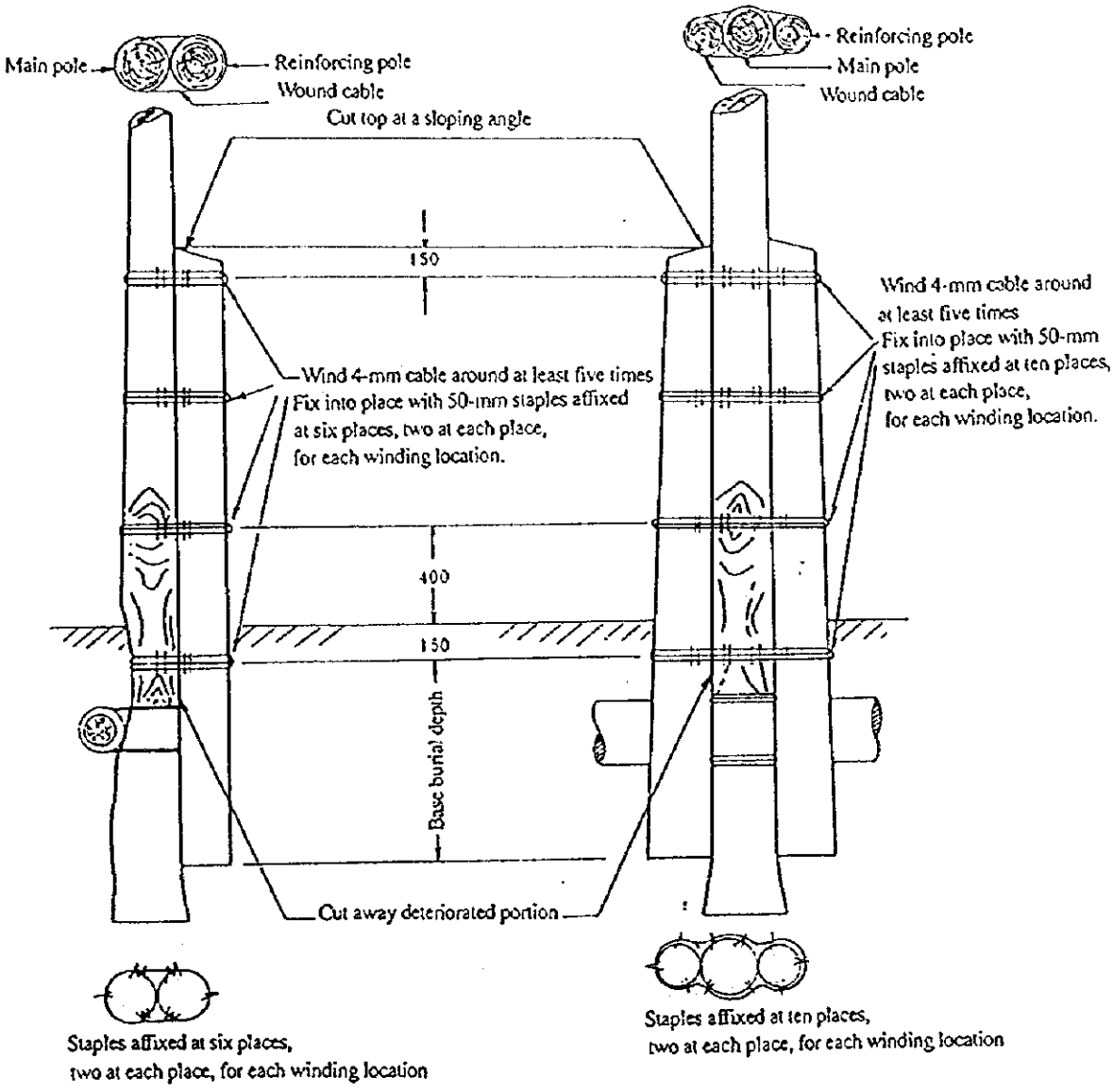

Main supplies

Item	Number
Reinforcing wooden poles	1(2)
Zinc-plated cable	-

(2) Standard measurements for base reinforcing work

The standard measurements for base reinforcement are shown in Table 1. The reinforcing pole length and the depth of burial may be increased, depending on the degree of deterioration (rotting) of the main pole.

Table 1 Standard measurements for base reinforcement

Existing pole length (m)	Standard length of the reinforcing pole(m)	Depth of burial of the reinforcing pole(m)	Number of places of winding with cable
7 – 8	3	1.0	4
9 - 11	3	1.2	4
12 - 14	4	1.5	5
15 and above	5	1.8	5

3. Reinforcement at the ground contact portion

(1) Reinforcement of wooden poles at the ground contact portion is as shown in Figure 3.

Figure 3 Method of reinforcement of wooden poles at the ground contact portion

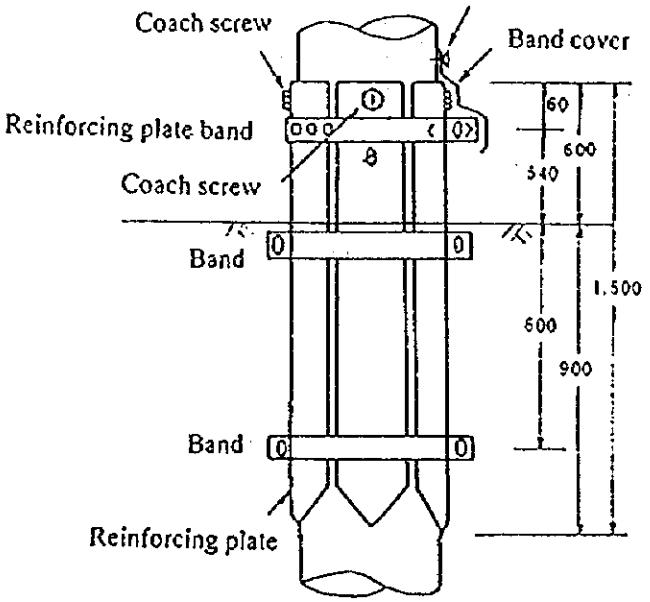

Main supplies

Item	Specification number
Reinforcing plate	4
Reinforcing plate band	1
Band cover	1
Band	2
Coach screw	4
Threaded nail to affix rack	1

Appendix 5.9-2　送電線の巡視項目

種別	巡視事項	
支持物 （含む支柱、支柱線）	木柱	o腐朽 o傾斜
	木柱建入	o建入不良 o根入れ不良
装柱	腕木	o腕木の腐朽、傾斜、脱落
	碍子	o碍子不足、破損、取り付け不良 o金具の亀裂、曲がり、さび o取り付けボルト、クランプのゆるみ
支線	離隔距離	o他の送電線、配電線との離隔不足 o地上高不足
	その他	o根入れ不足 o鋼より線の腐食および著しいさび oつる草が巻き付いていないか o太さ不足 oゆるみの多いもの
電線	離隔距離	o建造物造営物、配電線、樹木との離隔不足 o地上高不足
	不良電線	o電線のキンク(kink)、損傷のあと o絶縁処理不良
	電線接続点	o締め付けコネクタ個数不良 oスリーブ、コネクターの破損 oその他外観上の変化のあるもの
	その他	o弛度不適正 o縁回し線が腕木に接近
架空地線	施設方法	o取り付け金物各部のボルトのゆるみ o弛度の不適正
	その他	o取り付け金物の亀裂、曲がり、さび

Appendix 5.9-3　69kV 送電線の安全対策

1) 電気危険防止対策

電力流通設備に関する作業に際しては、作業者の災害を防止する目的から危険防止対策が講じられるべきである。

a. 作業指揮者の決定と指揮者の役割

作業にあたっては必ず作業指揮者を定め、作業指揮者が直接指揮をとり、作業に従事する者に対して「作業の期間及び内容」を周知するほか、「作業の方法や手順」等についても理解させる。また、作業に際しては、次の事項を確認してから着手させるようにしなければならない。

○送電線に電気が流れているかどうかの確認

○監視人の配置状況の確認

○作業のための短絡接地の有無の確認

○作業範囲の確認

b. 停電作業を行う場合の措置

上記作業前の確認の他、次の措置を行う。

○残留電荷を保持する恐れのある者については、確実に放電を行う。

○電気の有無を検査して確実に短絡接地する。

c. 停止作業電路を再通電する場合の措置

○作業者が感電する恐れのないことを確認する。

○短絡接地をはずしたことを確認する。

d. 充電部に近接して行う作業の措置

送電線作業において、隣接の配電線が充電中の状態で作業することもあるので、その対策としては次のとおりである。

○感電を防止する囲いを設ける。

○充電電路に絶縁防護具を装着する。

○作業場と他設備の区画をする。

2) 作業場の区画の方法

道路沿いなど一般市民が作業付近にいる場合や、上述したように配電線などの充電部に隣接して作業を行う場合、区画を行うために、「区画棒」や「区画テープ」などを使用し、作業場出入り口、

作業場所、立ち入り禁止区域を明瞭に識別できるようにしておく。

3) 墜落危険防止

送電線のポール上におけるアームや部材の取り付け作業は高所作業となり、墜落の危険が伴う。そこで、墜落防止策として、安全帯を作業員が装着しロープで木柱と安全帯を結び、作業中はその状態で作業を行う。

4) 先取り安全対策の強化

災害は人と物との接触により発生するものであるから、この災害を防止するためには、人と物の両面からの対策が必要である。

物的な面では設備、機器等で災害をまねくような環境を取り除くこと、すなわち不安全状態の排除である。また、人的な面では人に災害を起こさせるような行動をとらせないこと、すなわち不安全行為の排除である。しかし、本来人間は間違いを犯しやすいという性質を持っているといわれ、人の面からの対策は安全管理上最も重要な事項とされている。このようなことから、人的誤り防止として、作業方法の規則化、基本動作の徹底をはじめ、作業現場における監視体制の強化など多面的な施策を講じる。

また、これに加えて、潜在する危険を速やかに予知し、事前時いっさいの危険を排除する、いわゆる安全を先取りするための危険余地という考え方を導入することにより、作業員の危険予知能力の向上と習慣化が定着する。

この危険予知活動は、現場における作業着手前の打ち合わせ、つまり Tool-Box-Meeting（ＴＢＭ）で危険予知してその対策を考えていく方法をとることによって、安全をより確実なものにしようとするものである。この手順の概要を次ページに示す。

このように、危険予知活動は安全を確保するため有効な手段であるから、各種の作業に習熟することは基より、危険予知訓練を繰り返し実施し危険予知能力を高めることが重要である。

Outline of the TBM (Tool-Box-Meeting) procedure

1) Gathering (line-up and greeting)

(1) Gathering (line-up and greeting)
Line-up in a fan-shaped formation so that all faces can be seen.

2) Commencement of meeting (TBM)

(2) Commencement of meeting
The leader of the crew confirms the basic health of each worker by checking the complexion and has each confirm each other's wear.

3) Work instructions

(3) Work instructions
* Objectives * Program * Substance
* Method * Division of duties * Procedure
The leader of the crew explains the objectives and substance of the work for the day, and then presents a clear program, procedure, method, and division of duties for safe yet efficient performance of the work, with full consideration of the skills, experience, and health of the crew. The leader also instructs the crew to suspend the work and inform him if they encounter tasks requiring work not in the program or tasks that would be hard to perform by the standard method.

4) Confirmation of work instructions

(4) Confirmation related to work instructions
The crew leader confirms that all workers understand the instructions, by having them repeat them, for example. (Particular attention must be paid to younger workers.) The leader also confirms the assortment of required materials, tools, and safety gear, and makes an advance check of the same.

5) Activities for advance detection of danger

(5) Activities for advance detection of danger
Activities for advance detection of danger on the site may make use of blackboards, construction paper, or ledgers. Importance must be attached to accurate detection within a short time.

Appendix 8.2-1 事業面からの評価

● 組織・要員面について

(1) NPCの組織・要員

現状のNPCの運営管理組織としてはイサベル事務所，ライト事務所がそれぞれレイテ，サマール地区の変電所，送電線施設の保守・運用を行っており、これらの２事務所の総合統括管理をレイテ地区のオルモック事務所が行っている。その概略組織図を、下記に示す。

レイテ・サマールは、既述のように、ビサヤ地区に属しており、ビサヤ地区を統括管理しているのが、セブにあるビザヤス統括本部(Visayas Regional Center)であり、オルモック事務所もこの Cebu RCの管理下にある。

NPC のレイテ・サマール島の変電所・送電施設運営管理組織

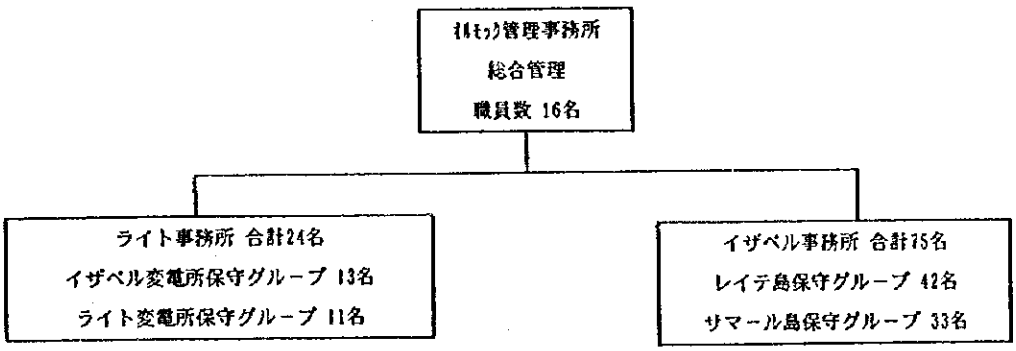

これに対して、オプション１から３までの 11ECs 組織・要員について以下のように考える。

(2) 11ECs の組織・要員

1) オプション 1A、1B の場合、施設運営管理組織としては現状の NPC の保守運営状況を勘案するとともに既存の ECs 職員の技術力も考慮に入れて以下の組織を提案する。

オプション1A、1Bの基本的な職員構成条件は次の通りとする。

技術関連職員；

概ね100 ckt.km当り　1グループ

1グループの構成は、　1フォアマン(作業長)

3シニアラインマン(年長作業員)

3ラインマン(作業員)

1運転手　で計8名

レイテ島送電線亘長　約440km　従って　4グループ（32名）

サマール島送電線亘長　約450km　従って　4グループ（32名）　各々必要

レイテ島事務所は、レイテ島にある69kV送電線施設の保守をすると同時に、東ビサヤ地区全体の69kV送電線施設の管理も行い合理化を図る。

レイテ島管理事務所の職員数合計は、38名(6 + 32)

マネジャー	1名
ﾏﾈｰｼﾞｬｰ補助兼財務会計担当	1名
ﾏﾈｰｼﾞｬｰ補助兼技術関連担当	1名
ﾏﾈｰｼﾞｬｰ補助兼通信担当	1名
運転手	1名
警備員	1名

従って、新送電協同組合の合計職員数は70名となる。これらの要員は新規に募集する。

2) オプション2Aの場合、施設運営管理組織としては既存の各ECに69kV送電線施設管理部門(T/L G)を設立する必要があり、11ECs全体としては、おおむね約110名（1グループ8名と総務関連職員2名：計10名×11ECs）の人員増になる。これらの要員は新規に募集する。その概略組織図を、下記に示す。

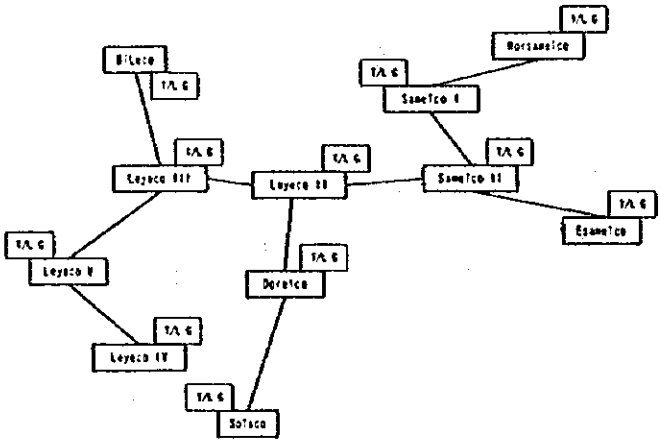

オプション2Aの基本的な職員構成条件は次の通りとする。（各ECとも1グループ

8 名に事務職員 2 名とする)

1 フォアマン(作業長)

3 シニアラインマン(年長作業員)

3 ラインマン(作業員)

1 運転手

2 事務職員　で計 10 名

従って、11ECs 全体の増員数は 110 名となる。

オプション 2B では、69kV 送電線を買い取る数社の ECs が内部に送電線保守運営部門を組織する。例えば、2ECs が買い取る場合、それぞれ 4 グループ（4G）と事務職員 6 名の計 76 名、約 80 名の要員を新規に募集する。

3) オプション 3A,3B の場合、レイテ・サマール全体の電力供給区域を 5 つに再構成し、この 5 つの区域に 8 グループ 64 名の 69kV 送電線保守要員と事務職員各 1 名の合計 72 名を配分する。その概略組織図を下記に示す。

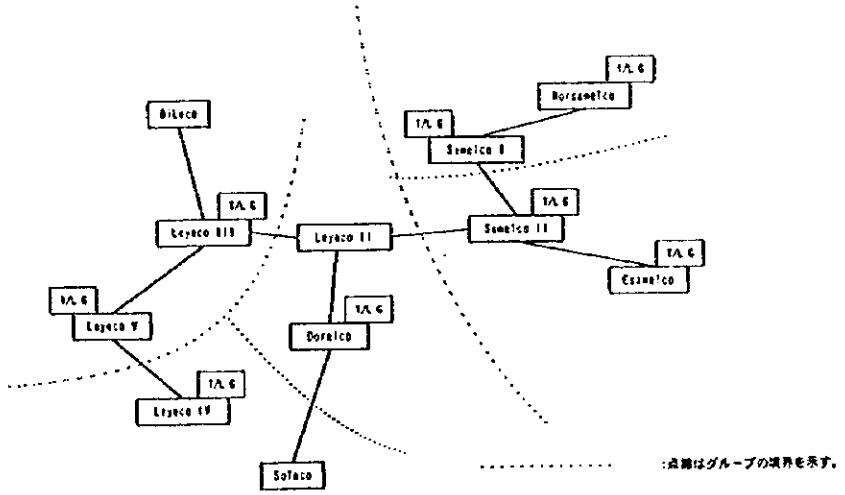

オプション 3A については、5 区域に次のとおり配分する。なお、1 グループ 8 名の構成についてはオプション 2A、2B と同じとする。

A 地域　2 グループ

B 地域　2 グループ

C 地域　1 グループ

D 地域　2 グループ

E 地域　1 グループ

従って、合計 8 グループ 64 名の保守運営要員と事務職員 8 名の合計 72 名が必要で

ある。この要員については、ECs 合併により生じた余剰人員を充当する。なお、区域分けについては、サマール島を南北で 2 分割し、レイテ島を東部、ビリラン島を含んだ西部、南部に分けた。

また、保守運営要員を置く旧 EC については、69kV 送電線の亘長の長いところを選定した。

オプション 3B では、合併参加の ECs に保守運営要員 8 グループ 64 名と事務職員 8 名の合計 72 名の新組織が必要となるが、その配分については、オプション 3A と同様とする。ただし、合併する ECs の数によっては要員確保が厳しくなる。

- 事務所等の施設について

事務所等の施設について、概略の積算を行った。その根拠を下記に示す。

(1)土地代・建物代については、30 人～40 人の要員を収容する建物のスペースは 500m²、この建物用に必要な土地は 1,000m² を基本とした。

(2)土地代・建物代の単価については、レイテ島においては、それぞれ 5,000Pesos/sqm、10,000Pesos/sqm とし、サマール島においては、それぞれレイテ島の 1/2 とした。

(3)要員 1 人あたりの土地・建物の占有スペースについて、レイテ島においては、それぞれ 26sqm/人、13sqm/人とし、サマール島においては、それぞれ 31sqm/人、16sqm/人とした。

次に、オプション毎に試算した積算値を別表のとおりまとめた。

オプション	地域	要員数（人）	所要スペース（sqm）		単価(p/sqm)	金額 (pesos)
オプション1A&1B						16,000,000
	レイテ	38	土地	1,000	5,000	5,000,000
			建物	500	10000	5,000,000
	サマール	32	土地	1,000	2,500	2,500,000
			建物	500	5000	2,500,000
			什器			1,000,000
オプション2A						15,000,000
	レイテ	70	土地	0	-	0
			建物	1,000	10000	10,000,000
	サマール	40	土地	0	-	0
			建物	500	5000	2,500,000
			什器			2,500,000
オプション2B						9,000,000
	レイテ	40	土地	0	-	0
			建物	500	10000	5,000,000
	サマール	40	土地	0	-	0
			建物	500	5000	2,500,000
			什器			1,500,000

- 電気料金面について

オプション2A、2Bについての詳細は次の通りである。

11ECsにそれぞれ分割して移管した場合の69kV送電線保守運営費について試算した結果は次のとおりである。Leyeco II (0.05P/kWh)や、Leyeco V (0.17P/kWh)については、69kV送電線保守運営費は、オプション1の0.25P/kWhに比べ低い。

他の9ECsではSamelco I (0.31P/kWh)からLeyeco IV (0.80P/kWh)まで送電費の上乗せ分はオプション1の0.25P/kWhと比べ高くなっている。また、Leyeco II, Leyeco Vならびに Samelco IIを除くECsは管内に138/69kV変電所がないため、経由する各ECの送電線保守運営費が上乗せされる。そのため、送電費はさらにアップすることになり、結果的に各69kV保守運営費は、次のようになる。

(単位：P/kWh)

Leyeco I	0.63 (=0.05+0.58)	Samelco I	0.74 (0.43+0.31)
II	0.05	II	0.43
III	0.79 (=0.05+0.74)	Norsamelco	1.27 (=0.43+0.31+0.53)
IV	0.97 (=0.17+0.80)	Esamelco	0.95 (=0.43+0.52)
V	0.17		
Soleco	1.16 (=0.05+0.58+0.53)		
Bileco	1.37 (=0.05+0.74+0.41+0.17)		

69kV TL Facility Operation and Maintenance Cost of each EC in Leyte and Samar

Year:2001

(Unit: thousand pesos)

	Dorelco	Leyeco II	Leyeco III	Leyeco IV	Leyeco V	Soleco	Bileco	Samelco I	Samelco II	Norsamelco	Esamelco	Total
1. Revenue	14,231	6,325	9,989	12,881	15,002	10,375	3,240	10,953	10,375	13,846	12,110	119,328
2. Costs												
1) Maintenance *1	2,895	1,011	1,884	2,573	3,078	1,976	276	2,114	1,976	2,803	2,389	22,973
2)Personnel cost(Ave. nos of staff:10 employees) -8,000 pesos per month per employee in 1996 -Increase at a rate of 3 percent annually	1,113	1,113	1,113	1,113	1,113	1,113	1,113	1,113	1,113	1,113	1,113	12,242
3) Administrative costs (2) Personnel cost x 80%)	890	890	890	890	890	890	890	890	890	890	890	9,794
69kV facility fixed assets balance (year-end) (449 mil. P)	54,688	19,097	35,591	48,612	58,160	37,327	5,208	39,931	37,327	52,952	45,139	434,033
4) Depreciation cost (3.3%)	1,886	659	1,227	1,676	2,006	1,287	180	1,377	1,287	1,826	1,557	14,967
Capital investment	3,338	1,166	2,173	2,968	3,550	2,279	318	2,438	2,279	3,232	2,756	26,496
5) Σ-Depreciation (Capital investment *3.3%)	111	39	72	99	118	76	11	81	76	108	92	883
6) Interest payments on borrowings (12%) (balance of 449 million pesos)	6,789	2,371	4,418	6,035	7,220	4,634	647	4,957	4,634	6,573	5,604	53,880
2. Total costs (1)+2)+3)+4)+5)+6))	13,684	6,082	9,605	12,386	14,425	9,976	3,116	10,532	9,976	13,313	11,644	114,738
3. Profit (revenue - total cost = total cost*4%)	547	243	384	495	577	399	125	421	399	533	466	4,590
4. Sold energy (MWh)	24,327	126,230	13,424	16,002	87,106	19,525	7,985	35,386	24,096	26,253	23,231	403,564
5. Average power rate (P/kWh):(1/4)	0.58	0.05	0.74	0.80	0.17	0.53	0.41	0.31	0.43	0.53	0.52	0.30

*1 : 69 kV facility fixed assets and maintenance costs are calculated by the length of 69 kV T/L for each EC service area.

*2 : Total of 69 kV facility fixed assets with 449,000 thousand pesos is derived based upon depreciation in 2001.

All figures is 2001 base.

● 合理化面からの評価

オプション 1、2、3 それぞれについて、集中化ならびに分散化のメリット、すなわちコスト減（合理化）になる面とディメリットすなわち、コスト増（非合理化）になる面とに仕訳をして評価してみた。

オプション 1A、1B では新送電協同組合の要員（約 70 名）をリクルートすることと、収容施設を作ることでコスト増になる。

この反面、従来 NPC が所有していた 69kV 送電施設を所有することでこの送電費用の NPC への支払いが不要になる。

また、69kV 送電線を集中して管理運営する点では、ECs の境界における指揮命令系統の一貫性を考慮した場合にオプション 2A、2B に比べて調整等に要する時間の無駄を省く観点から有利である。

オプション 2A、2B では、送配電設備の保守要員の相互融通による保守の合理化がはかれる。

また、事故の発生現場への短時間で到着できることから、停電時間の短縮が計られ収益が向上することが考えられる。

しかしながら、職員がオプション 1A、1B の 70 名に比べて 110 名と約 5 割増の人件費負担となる。

また、11ECs ごとに機材を個別に購入する必要があり、オプション 1A、1B、3A における一括購入によるメリットはなくなる。

また、所要資金の導入でもオプション 1A、1B、3A に比べて 11ECs 毎の交渉では不利になると考えられる。

なお、車両については送配電の部門間で相互融通が可能である。

オプション 3A では資金の導入にあたっても一社化されれば、海外その他からの借り入れにあたっても交渉力が強くなる。オプション 3B については、2～3 社の合併のため交渉力は弱くなる。

しかしながら、集中化する反面、全域をカバーするために機動力が必要になってくる。このため、車両の購入費（1 グループ 1 台として 8 グループ 8 台）が新たに必要となってくる。

Appendix 8.2-2 設備・技術面での評価

レイテ・サマール島の 69kV 送電線移管案（オプション）について、設備・技術面での評価を行う。

レイテ・サマール島の系統構成は、上位電圧系統として 230kV、138kV 交流送電線が存在し、現在建設中の±350kV 直流送電線が完成すると島間の連系系統を含めた基幹送電系統が構築されることになる。これに対して、69kV 送電線は ECs への地域供給送電線としての役割を担うことになる。このように、69kV 送電線移管後は、基幹系統に対して、配電系統を含んだ地域供給系統として区分けされ取り扱われることになるであろう。

そこで、69kV 送電線を設備・技術面から地域供給系統としてどのような形態で移管するのが効率的で将来の問題が少ないか評価を行う。

- 69kV 送電線を分割移管する場合の評価

まず、69kV 送電線を現在と同様に放射状系統で運用を行う条件で、設備移管をどのような形で分割するか検討を行う。

設備の分割移管には、供給エリア毎に分割するケース、138/69kV 変電所のフィーダー単位に分割するケースなどが考えられる。これらの分割移管形態は、次のオプションに適用されることになる。

1) オプション 1B-t の強い ECs が新送電協同組合を結成するケース：新送電協同組合がレイテ島に 2 社結成される場合を想定すると、このケースではレイテ島の 69kV 送電線を 138/69kV 変電所のフィーダー単位に分割移管されることになる。

2) オプション 2A-w の既存の 11ECs が全ての資産の移管を受けるケース：11ECs それぞれの供給エリア毎に分割移管されることになる。

3) オプション 2B-w の既存の 11ECs のうち強い ECs が全ての資産の移管を買い取るケース：レイテ島の強い 2 ECs がレイテ島を 2 分割して買い取る場合が想定され、このケースではレイテ島の 69kV 送電線を 138/69kV 変電所のフィーダー単位に分割移管されることになる。

4) オプション 2B-x の既存の 11ECs のうち強い EC が一部の送電線を買い取るケース：一部の送電線のみを買い取るため、その他の送電線は NPC あるいはその他の事業体所有となる。この結果、当然のごとく、設備の分割移管となる。

5) オプション 3B-z の一部の ECs が合併して、69kV 送電線の一部を買い取るケース：オプション 2B-x と同じ。

① 69kV 送電線を各 EC の供給エリア毎に分割移管した場合、次のような問題が生ず

ると考えられる。

- ✧ 電源変電所から自社変電所に電力を供給する送電線のメンテナンスとその他の送電線のメンテナンスの実施状況に格差が生じる可能性がある。このため、他社へ供給する送電線のメンテナンス状況の悪化により信頼度が低下する。
- ✧ 各 EC による送電線の使用量によって、送電線費用のアロケーションを実施する必要があり、費用配分の手続きが煩雑になる。また、送電線新設分の費用配分の調整に多大な労力を要する。
- ✧ 電圧、潮流の問題の解決が困難になる。例えば、69kV 送電線の上流に位置する EC では、電圧低下がさほど大きくなく、逆に送電線の下流に位置する EC では電圧低下が大きくなる。このため、電圧低下の対策が下流に位置する EC の負担になることが想定される。

② フィーダー単位で分割移管した場合、次のような問題が生じると考えられる。

- ✧ Maasin 地点を常時開放状態で各変電所から各エリアへ単独供給を行う場合、事故時に電力融通が円滑に行えるか疑問であり、ループ状態の電力系統を有効に活用できない。

また、将来構想としてレイテ島のループ運用およびサマール島のループ系統の構築を考慮した場合の問題点は次のようなことが考えられる。

① 例えば、レイテ島の 69kV 送電線において、Tongonan P/S～Massin と Babatngon S/S～Maasin のように、Maasin 地点で分割した場合、次のような問題が生ずると考えられる。

- ✧ 例えば、ループ運用を行った場合、ある EC への供給電力が Tongonan からの送電線か Babatngon からの送電線のどちらを使用したか不明確になり、送電線使用料金の精算が煩雑になる。
- ✧ ループ運用を行う場合、現在の遮断器の設置状況では、事故時の事故除去区間が広い範囲にわたるため、ループ系統を効率的に活用されない可能性がある。

② サマール島の Wright S/S のフィーダー毎、つまり、北部フィーダーと東部フィーダーに分割した場合、次のような問題が生ずると考えられる。

- ✧ 現在、NPC ではサマール島の 69kV 送電系統のループ化を将来に向けて思考している。しかし、ループ化が完了しない時点で北部フィーダーと東部フィーダーに分割移管すると、それぞれフィーダー別に建設計画が進められるため、送電線ルートなどの設備開発の整合性がとれなくなり、将来のループ化が困難となる可能性がある。

以上のとおり、送電線を細分化しての分割移管は、1)電力設備が電気的に一体のものと

して取り扱われないこと、2)電力供給責任が不明確になること、さらに 3)電力系統の運用が煩雑になることなどの理由により好ましくなく、分割移管は現実的な可能性は低いと考えられる。

● 69kV 送電線を一括移管する場合の評価

69kV 送電線の一括移管は、分割移管が上述した問題があるのに対して、次のような優位性が考えられる。

1) 69kV 送電線全体を維持・管理することが可能であるため、全 11ECs に供給する電気の質を均一にすることが可能である。例えば、電圧の維持（無効電力 reactive power の供給）を送電線全体で対策ができること。全体の潮流分布を把握することができ、過負荷送電線が生じた場合、負荷切替ができること。

2) 責任の所在が明確になる。例えば、分割移管の場合は、樹木接触による地絡事故はどの区間で発生したか不明確なのに対して、一括移管の場合は、送電線所有者の責任となる。このように、送電線所有者は事故後処理および事故対策を実施することになり、結果として停電頻度の減少などが期待できる。

このように電気の質の均一化、責任の明確化の観点からも、設備面において 69kV 送電施設の移管は、送電線を極力一括して移管することが望ましい。

一括移管とは、レイテ・サマール島の 69kV 送電施設をまとめて 1 事業社へ移管することである。また、レイテ島とサマール島は地形上の特徴として、海峡で分離されているため、69kV 系統についてはレイテ島とサマール島の系統が接続されてなく将来においても系統連系される可能性が小さいと予想されることから、レイテ島とサマール島をそれぞれ 1 事業社づつに移管する案も視野にいれておく。

次に、69kV 送電線の一括移管を想定しているオプションについて評価を行う。一括移管を想定したオプションは 1A-s, 1B-s, 3A-y, 3B-y である。つまり、大別すると、新送電協同組合を設立し送電線を管理運営するか、ECs の合併により送電線を買い取るかである。この 2 案についての比較評価を行う。

オプション 1 の新送電協同組合を設立した場合、次のような短所および課題が考えられる。

1) 新送電協同組合が送電線を所有し、ECs が配電線を所有しているため電圧階級別に電力設備の運営管理者が異なる状況である。このため、送電系統と配電系統の間で協調をとった総合的な計画立案が難しい。また、送電系統の計画者は常に配電系統の需要動向に目配りを行い、需要動向を送電計画に反映する必要がある。

2) 系統運用が一元的にできない。例えば、Figure の左図ように系統運用の指示系統が

NPC、新送電協同組合、ECsの3重構造になる。このため、NPCからの送電線のABSの開閉を行う際、ECsの配電系統の状態や69kV変電所のABSの開閉状態を確認した後の送電線ABSの開閉操作の手順となり煩雑となる。

逆に、オプション3の合併したECsにより送電線を維持・管理する場合、オプション1の短所および課題が解決される。

1)送電線の所有者と配電線の所有者が同一である場合、送電計画と配電計画を同一のセクションで実施できることから、送配電系統全般を見渡しながら計画できる。また、送電線と配電線の併架の計画も可能である。

2)系統運用が一元的にできる。例えば、送電系統と配電系統の系統の作業状況や開閉器の開閉状況の情報を一セクションに集めておけば、NPCからの開閉指令に対して迅速な対応が可能である。

3)送電線と配電線の保守要員を共通にし、送電線と配電線を同時に同一人員でメンテナンスが可能であり、保守の合理化がはかれる。

4)ECsを合併して送配電系統を運用できると、エリア境界付近の需要地に69kV変電所の新設が可能となる。この結果、現在この需要地への低圧配電線による電力供給のために生じていた電力ロスを低減することができる。

5)この他に、合併したことにより、配電線を利用した電力融通が可能となり、現在、長距離配電線での電力供給が解消されることが期待できる。この結果、配電線の電力ロスの低減ができ、電圧低下も改善できる。

Figure　オプション1,3の系統運用を行う際の各社関係図

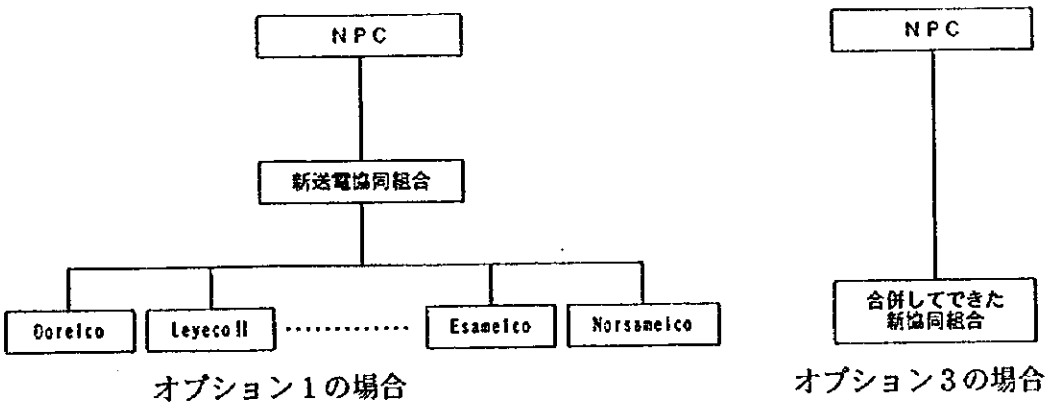

以上のように、69kV送電線を一括移管する場合でも、配電系統とより協調をとった計画・設備維持が可能であるかどうか、運用形態が簡素化できるかどうかにより、移管形態に優位性の差が生じてくる。

つまり、オプション１とオプション３の移管案では、オプション３は計画・設備維持面でも効率的におこなえること、運用形態がNPCから直接に指令下に配置できることから、オプション１に比べて合理的であると考えられる。