STRUCTURE
-BRIDGE

GENERAL VIEW RA/18 AQ

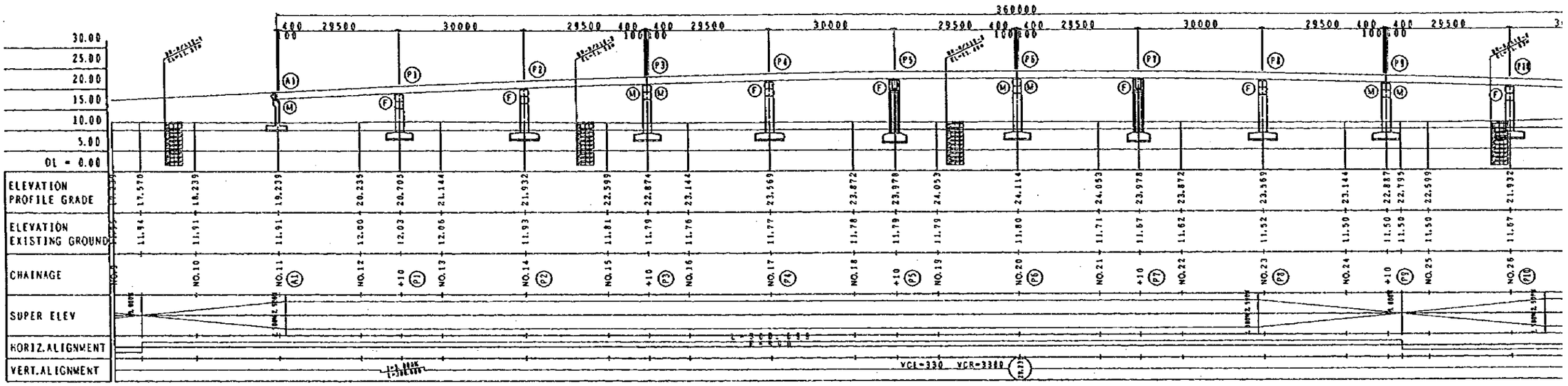

PROFILE (A-LINE) S=1:1000

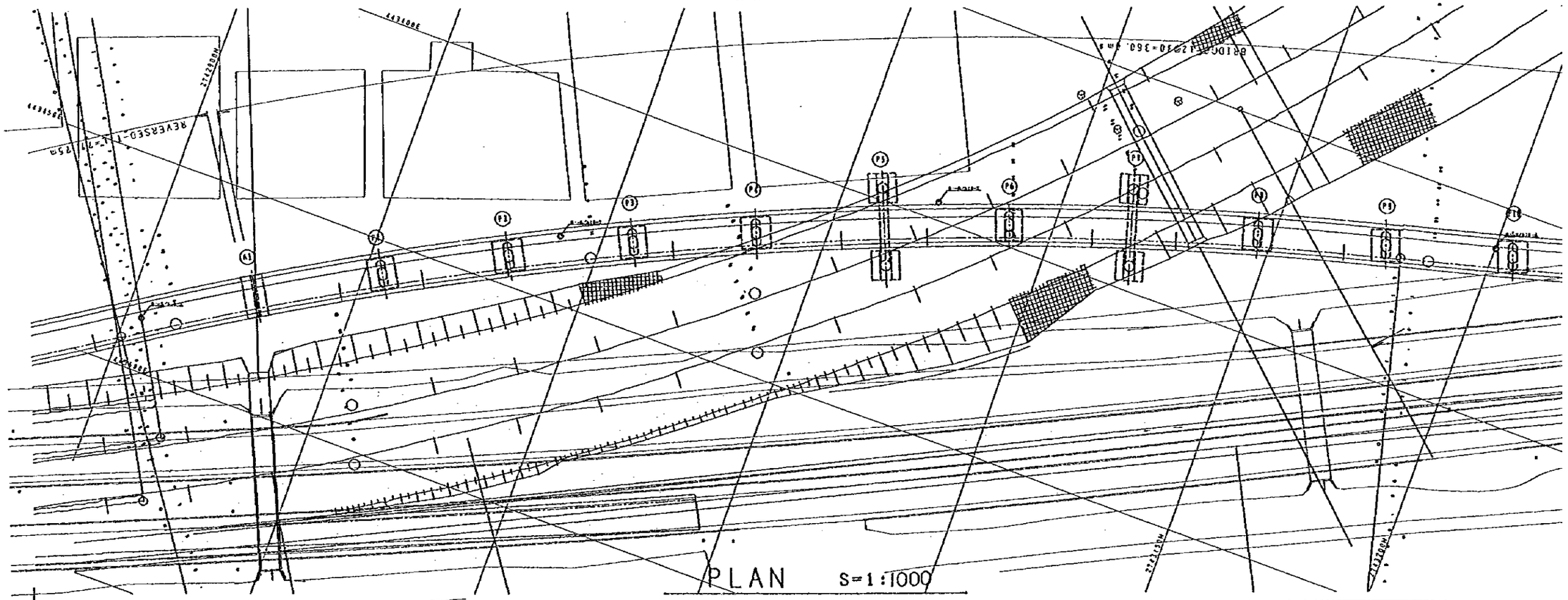

PLAN S=1:1000

NOTES:

GENERAL VIEW RA/18 AQR(A-LINE)

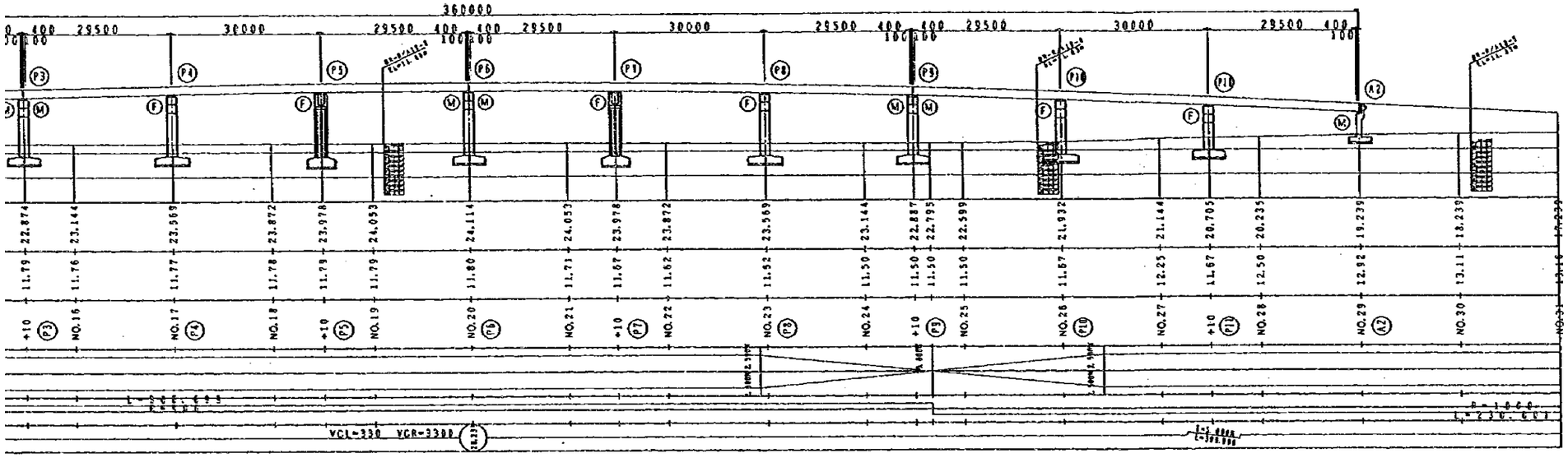

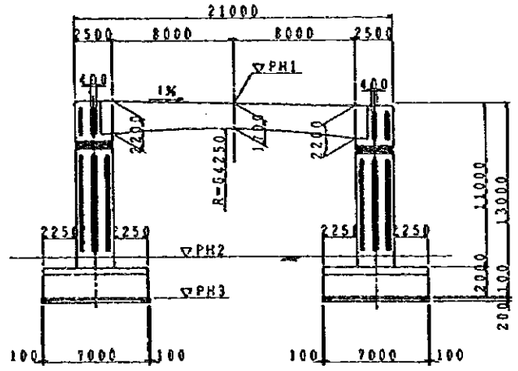

SECTION OF PIERS(Two Colu

PROFILE(A-LINE) S=1:1000

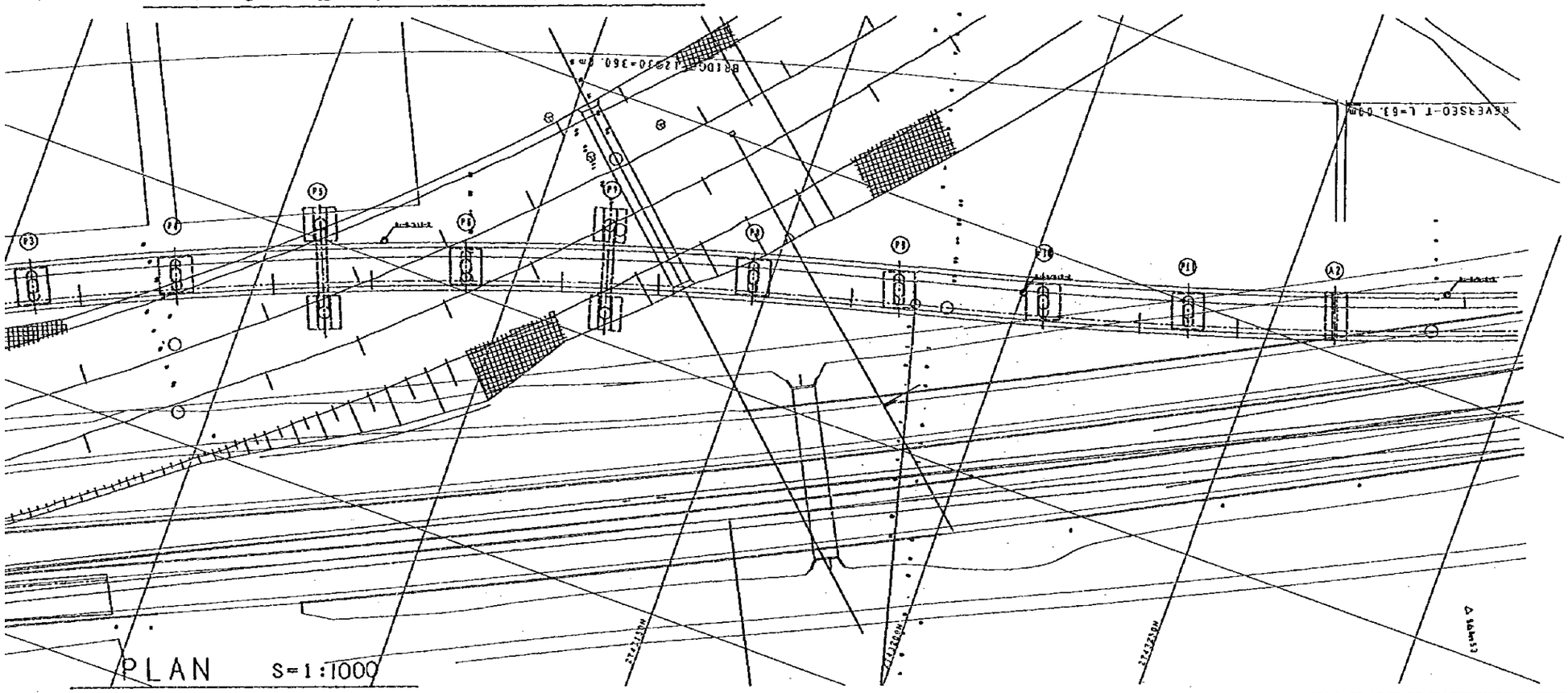

PLAN S=1:1000

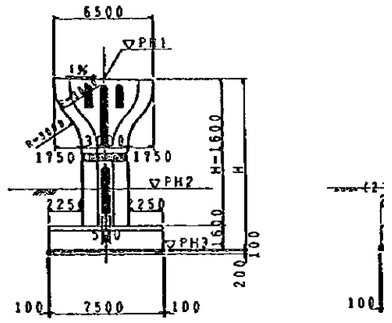

SECTION OF PIERS(T-Wall)

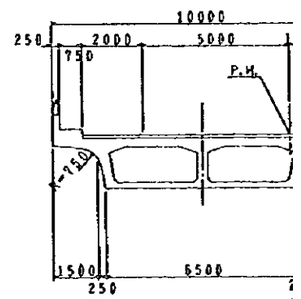

SECTION OF PC BOX GIRDE

JAPAN INTERNATION

JICA S
PACIFIC CONSUL
FUKUYAMA CONSU

N RA/18 AQR(A-LINE)

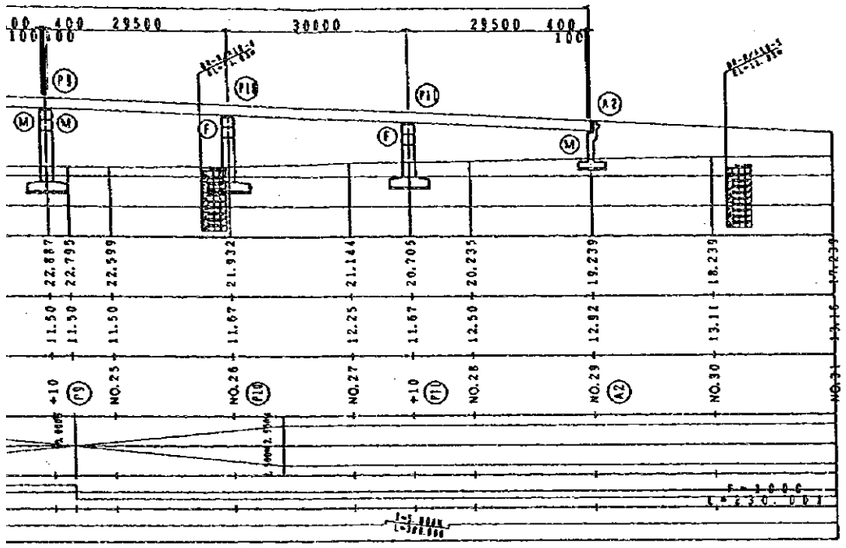

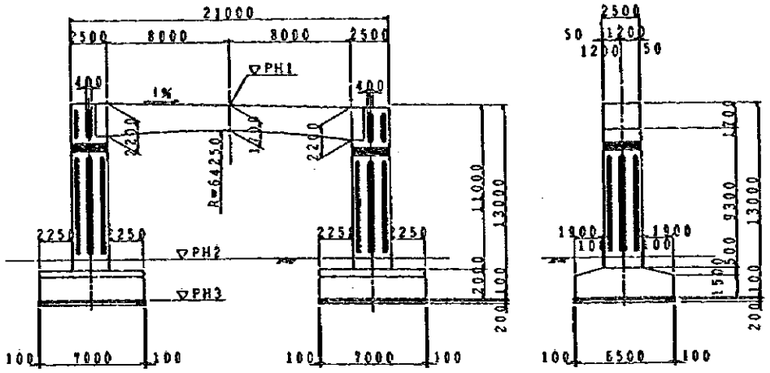

SECTION OF PIERS(Two Column) S=1:400

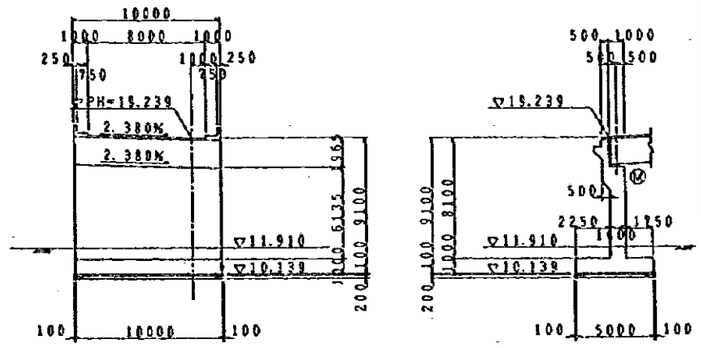

SECTION OF A1 ABUTMENT S=1:400

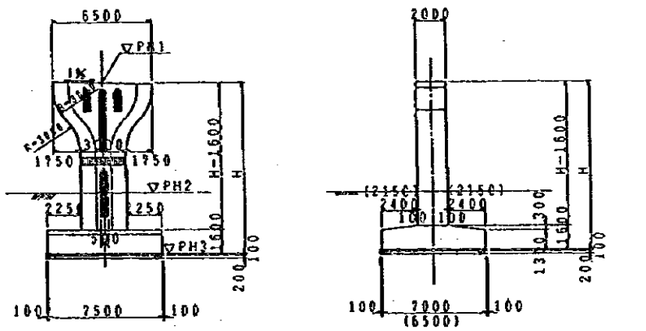

※( )・・・P1, P3, P6, P9, P11

SECTION OF PIERS(T-Wall) S=1:400

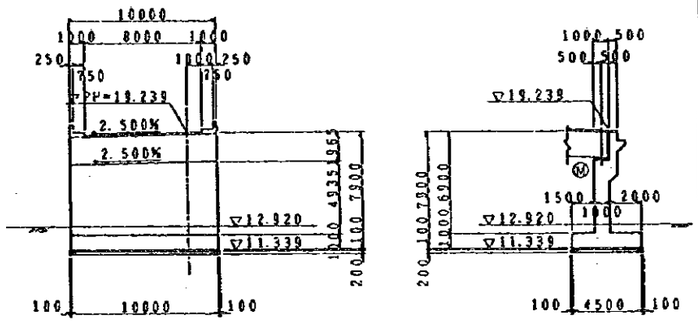

SECTION OF A2 ABUTMENT S=1:400

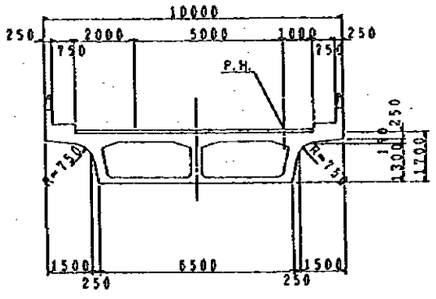

SECTION OF PC BOX GIRDER S=1:200

DIMENSION TABLE

	PH1	PH2	PH3	REMARKS	i (%)	H
P1	18.775	12.030	9.525	T-Wall	+2.500	9200
P2	20.002	11.930	8.502	〃	+2.500	11500
P3	20.952	11.785	8.452	〃	+2.500	12500
P4	21.639	11.770	8.839	〃	+2.500	12800
P5	22.048	11.785	9.048	Two Colums	+2.500	13000
P6	22.179	11.800	9.679	T-Wall	+2.500	12500
P7	22.115	11.665	9.115	Two Colums	+2.500	13000
P8	21.635	11.520	8.835	T-Wall	+2.380	12800
P9	20.884	11.500	8.384	〃	+0.240	12500
P10	19.870	11.670	8.370	〃	-1.910	11500
P11	18.625	12.375	9.425	〃	-2.500	9200

JAPAN INTERNATIONAL COOPERATION AGENCY (JICA)	CLIENT: MINISTRY OF COMMUNICATIONS, DIRECTORATE GENERAL OF ROADS
JICA STUDY TEAM PACIFIC CONSULTANTS INTERNATIONAL FUKUYAMA CONSULTANTS INTERNATIONAL	PROJECT: D/D ON ROAD DEVELOPMENT PROJECT ON BATINAH HIGHWAY
	TITLE: GENERAL VIEW RA/18 AQR(A-LINE)
	DATE / DWGNO. B-1

GENERAL VIEW RA/18 AC

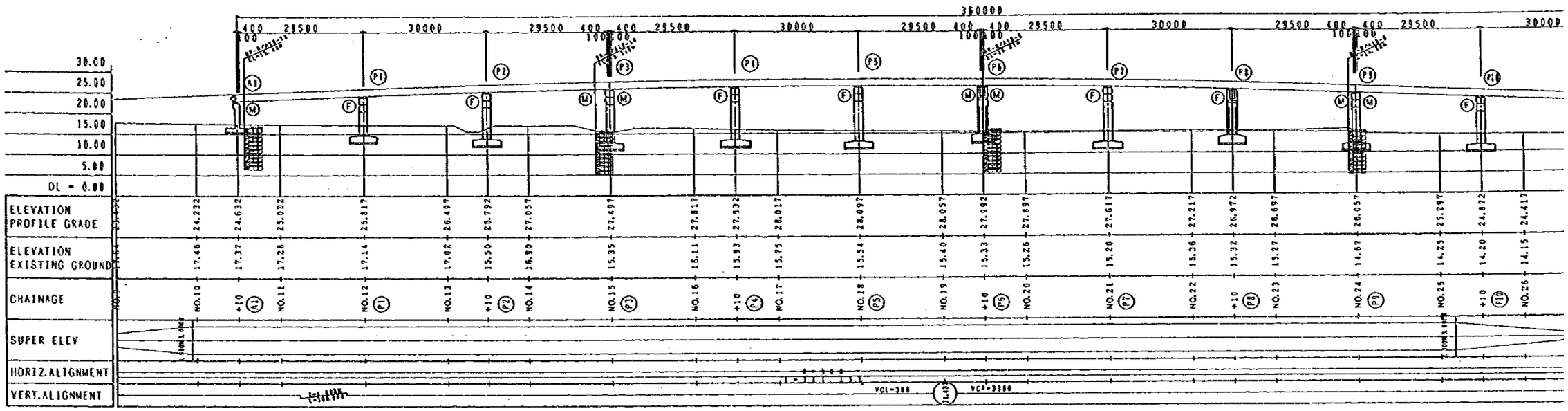

PROFILE (B-LINE) S=1:1000

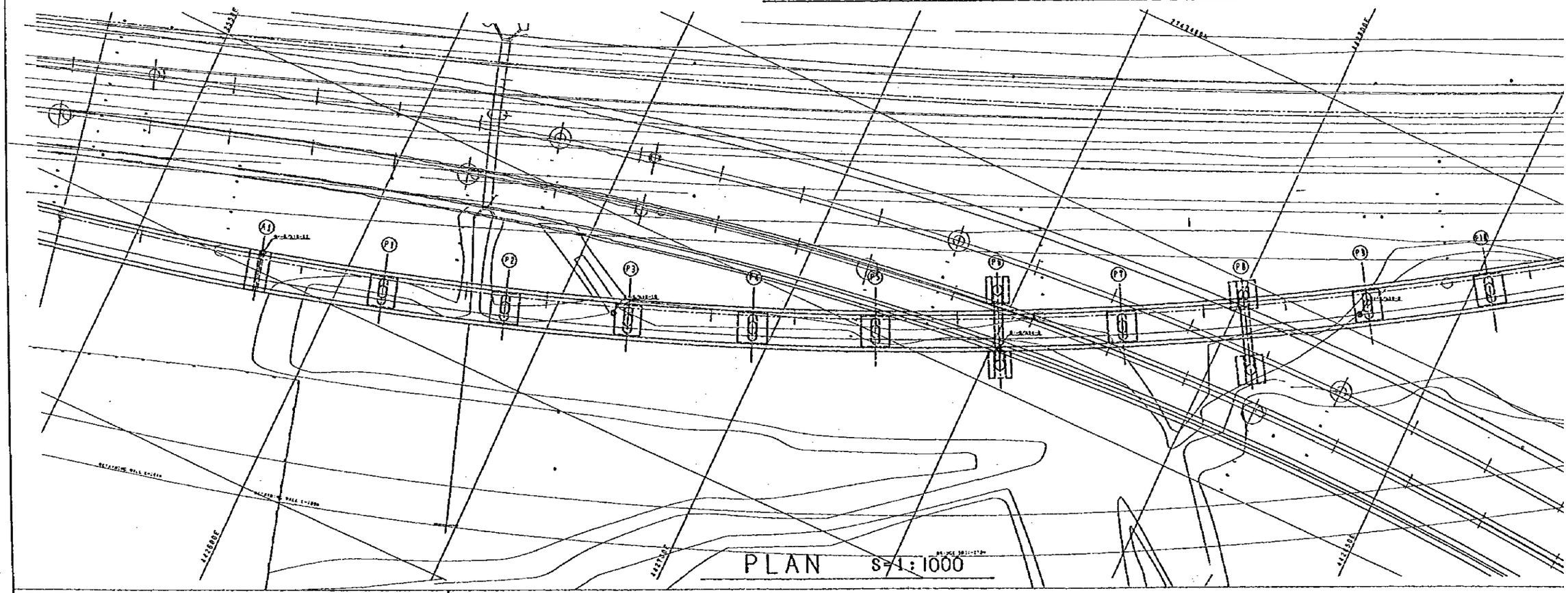

PLAN S=1:1000

NOTES:

GENERAL VIEW RA/18 AQR (B-LINE)

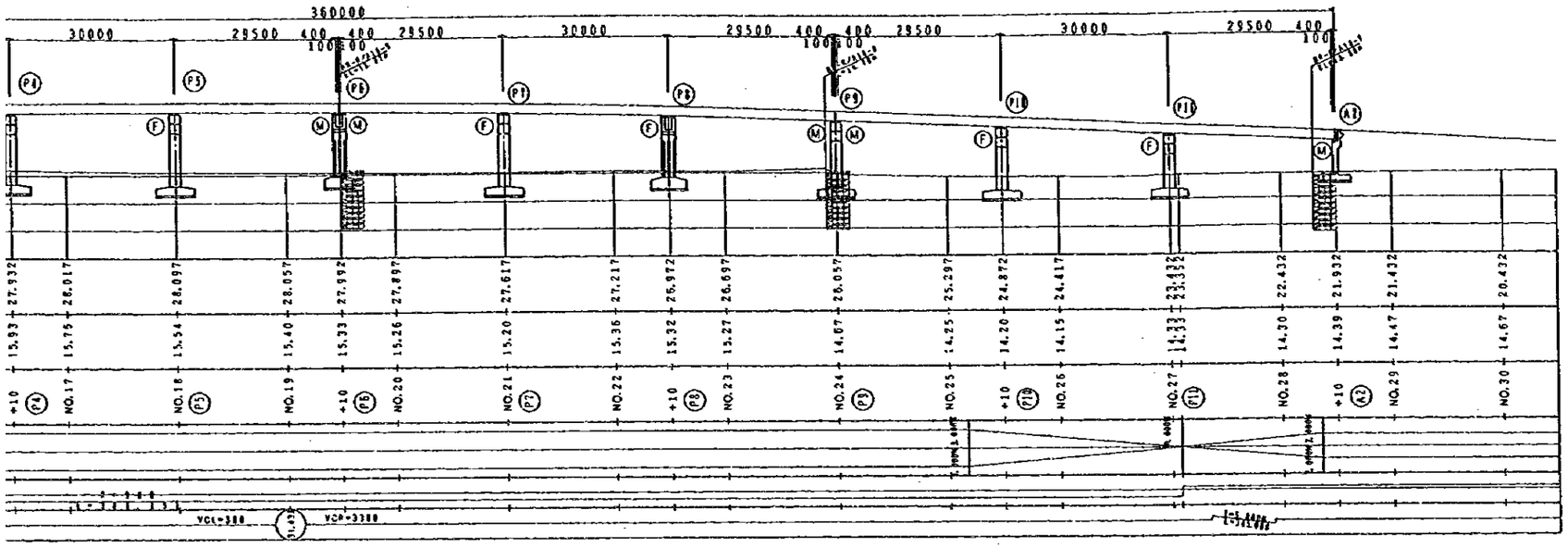

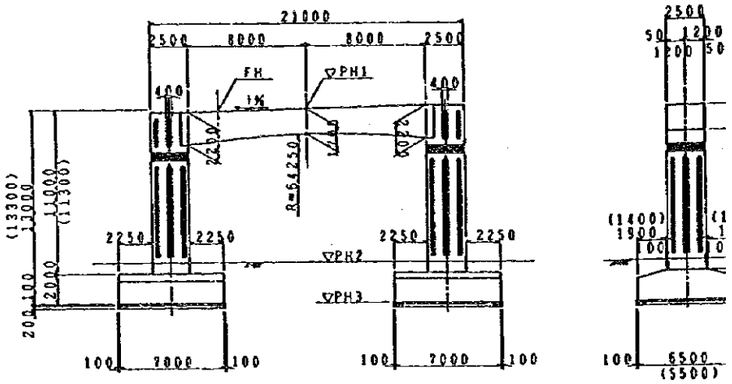

SECTION OF PIERS (Two Column) S=1:400

PROFILE (B-LINE) S=1:1000

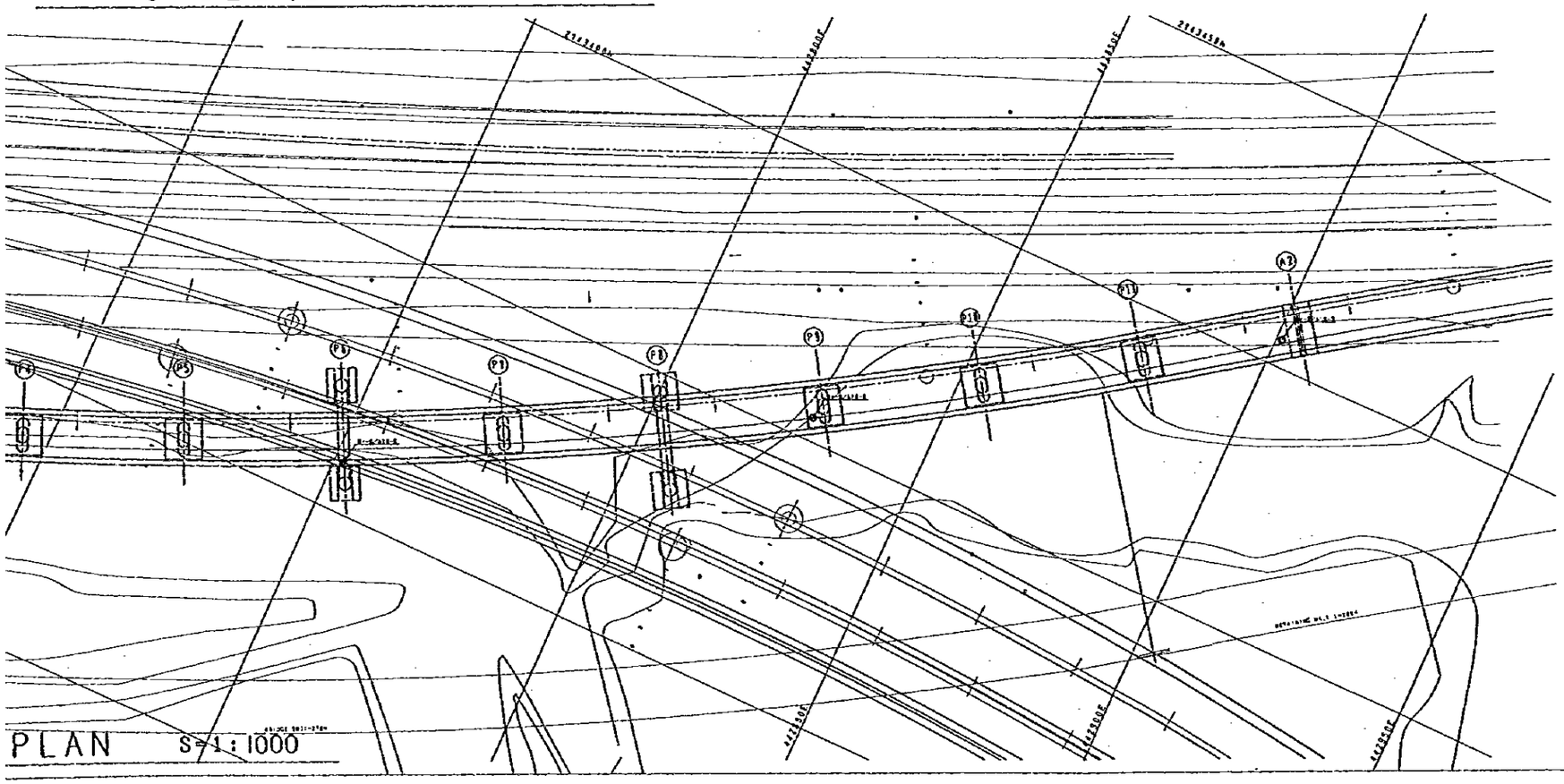

PLAN S=1:1000

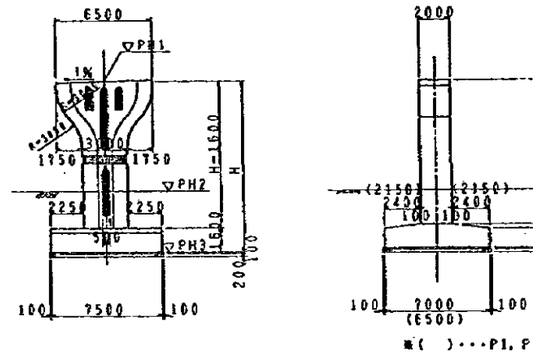

SECTION OF PIERS (T-Wall) S=1:400

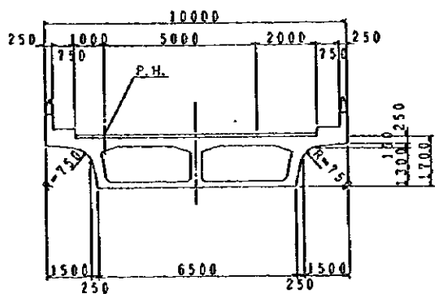

SECTION OF PC BOX GIRDER S=1:200

JAPAN INTERNATIONAL COOPERATI
(JICA)
JICA STUDY TEAM
PACIFIC CONSULTANTS INTERNA
FUKUYAMA CONSULTANTS INTERN

N RA/18 AQR(B-LINE)

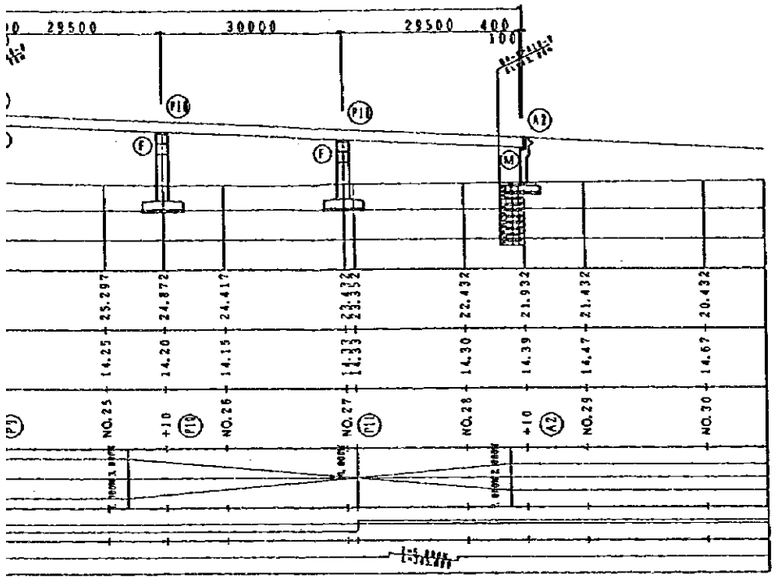

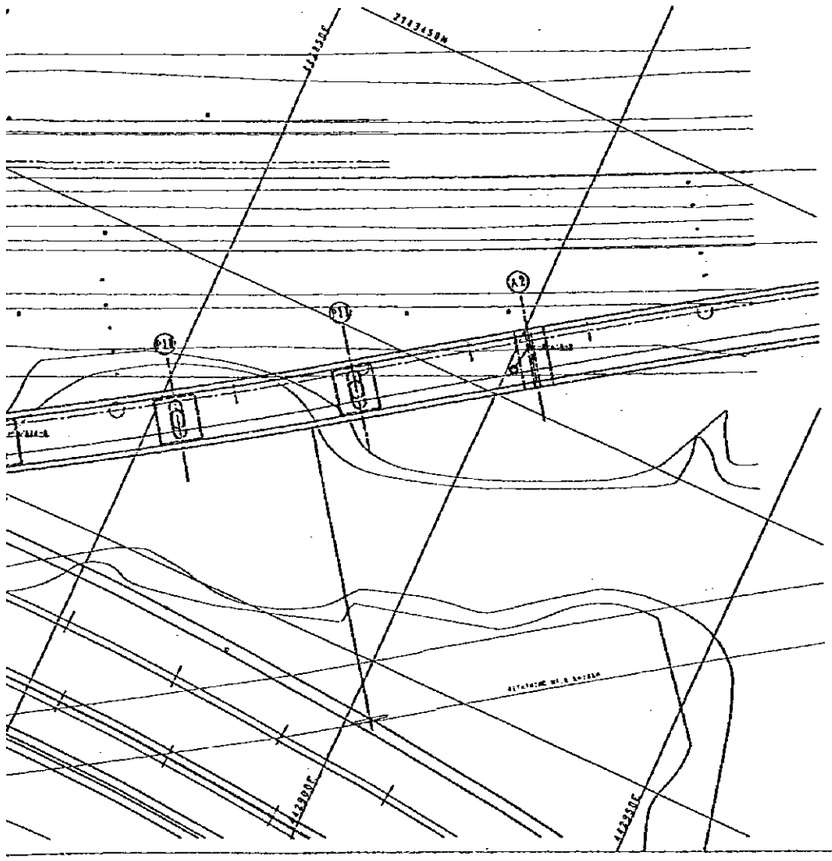

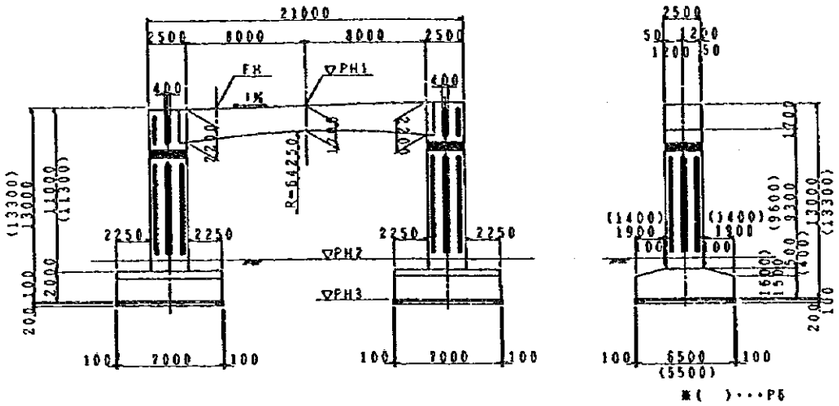

SECTION OF PIERS (Two Column) S=1:400

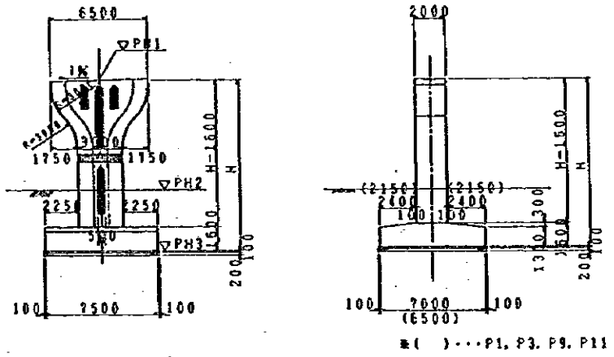

SECTION OF PIERS (T-Wall) S=1:400

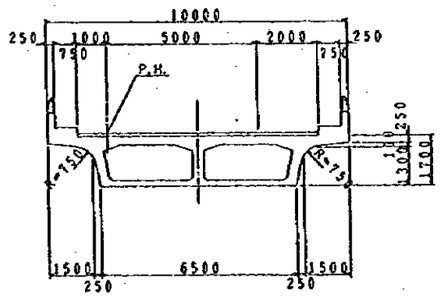

SECTION OF PC BOX GIRDER S=1:200

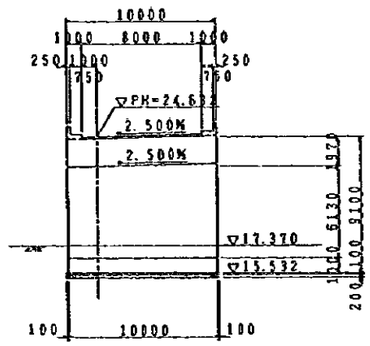

SECTION OF A1 ABUTMENT S=1:400

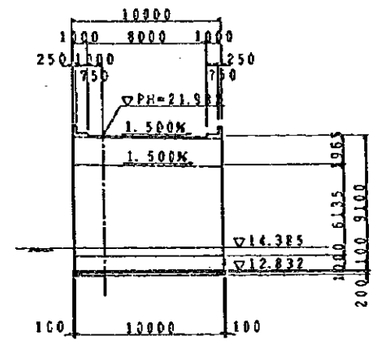

SECTION OF A2 ABUTMENT S=1:400

DIMENSION TABLE

	PH1	PH2	PH3	REMARKS	I (%)	H
P1	23.887	17.140	14.687	T-Wall	2.500	9200
P2	24.862	15.500	13.362	〃	2.500	11500
P3	25.562	15.350	13.062	〃	2.500	12500
P4	26.002	15.930	13.202	〃	2.500	12800
P5	26.161	15.540	13.367	〃	2.500	12800
P6	26.036	15.330	12.736	Two Column	2.500	13300
P7	25.687	15.200	12.887	T-Wall	2.500	12800
P8	25.130	15.315	12.130	Two Column	2.500	13000
P9	24.122	14.670	11.622	T-Wall	2.500	12500
P10	22.935	14.200	11.435	〃	2.260	11500
P11	21.430	14.330	12.230	〃	0.310	9200

JAPAN INTERNATIONAL COOPERATION AGENCY (JICA)	CLIENT : MINISTRY OF COMMUNICATIONS, DIRECTORATE GENERAL OF ROADS
	PROJECT: D/D ON ROAD DEVELOPMENT PROJECT ON BATINAH HIGHWAY
JICA STUDY TEAM PACIFIC CONSULTANTS INTERNATIONAL FUKUYAMA CONSULTANTS INTERNATIONAL	TITLE GENERAL VIEW RA/18 AQR(B-LINE)
	DATE / DWGNO. B-2

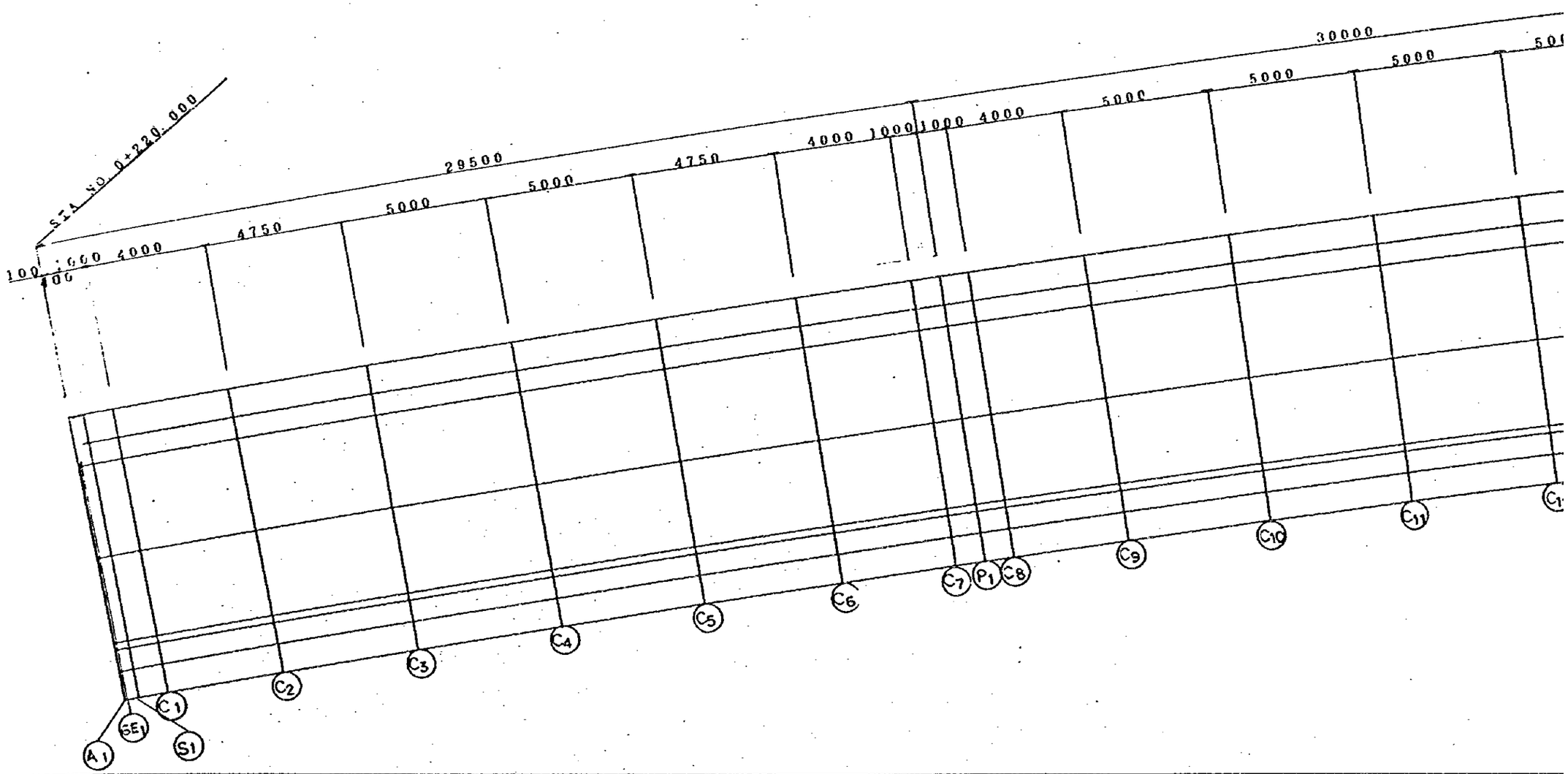
STA NO. 0+220.000
100
400
1000
4000
4750
5000
5000
4750
4000
1000
1000
4000
5000
5000
5000
30000
A1
SE1
S1
C1
C2
C3
C4
C5
C6
C7
P1
C8
C9
C10
C11

NOTES:

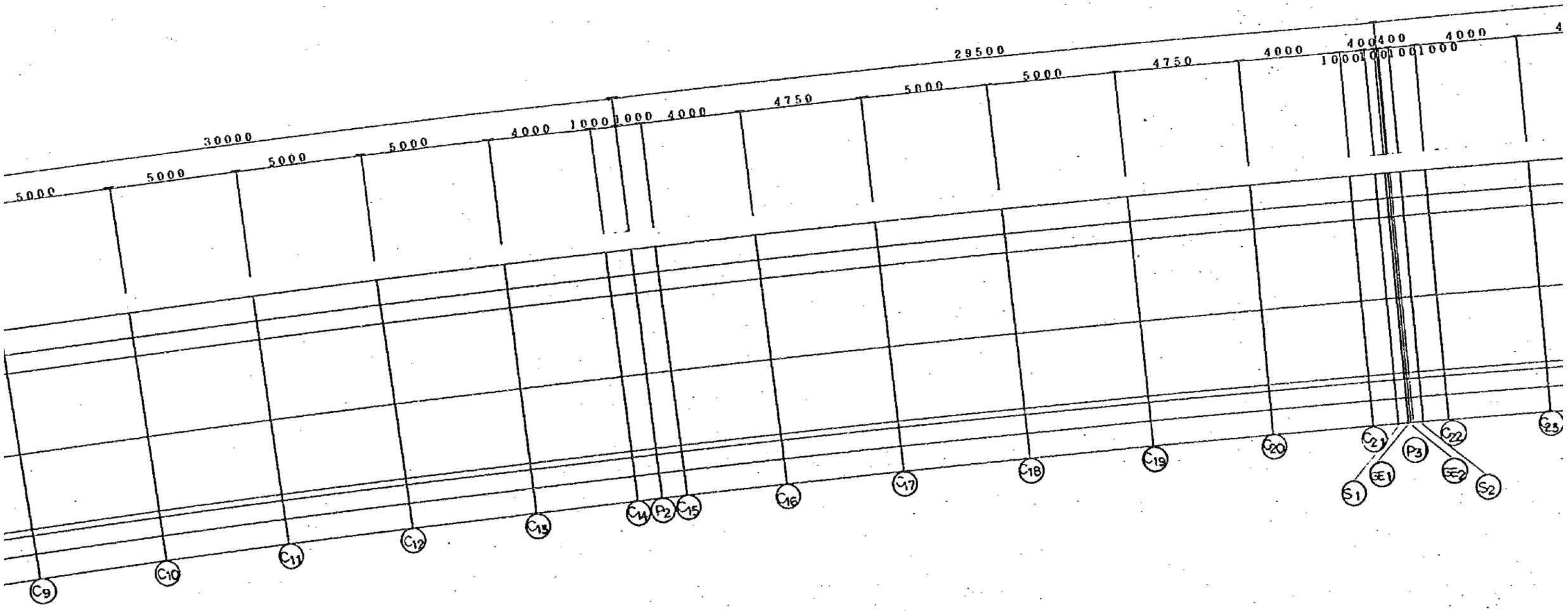
5000
5000
30000
5000
5000
4000
1000
1000
4000
4750
5000
29500
5000
4750
4000
400
400
4000
1000
1000
1000
C9
C10
C11
C12
C13
C14
P2
C15
C16
C17
C18
C19
C20
C21
P3
C22
C23
S1
SE1
SE2
S2

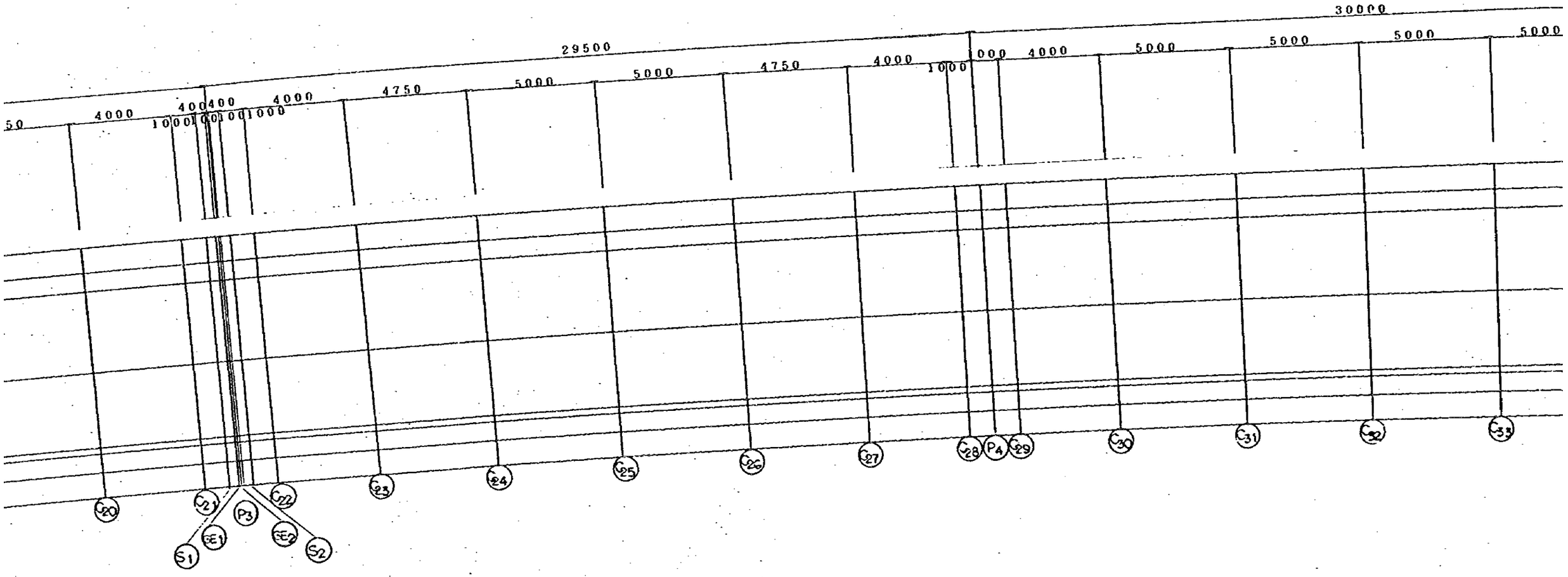

30000
29500
50
4000
400
400
4000
4750
5000
5000
4750
4000
1000
1000
4000
5000
5000
5000
5000
1000
1000
1000
1000
C20
C21
C22
C23
C24
C25
C26
C27
C28
P4
C29
C30
C31
C32
C33
P3
GE1
GE2
S1
S2

RA/18-AQR

A-LINE

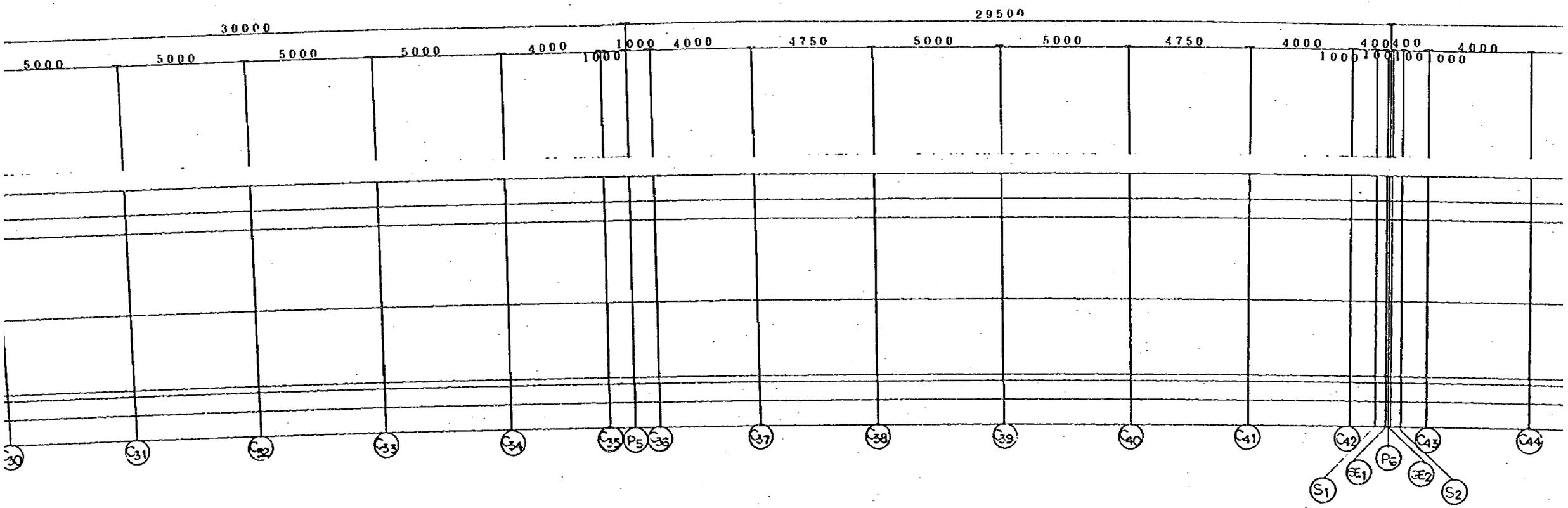

RA/18-AQR

A-LINE

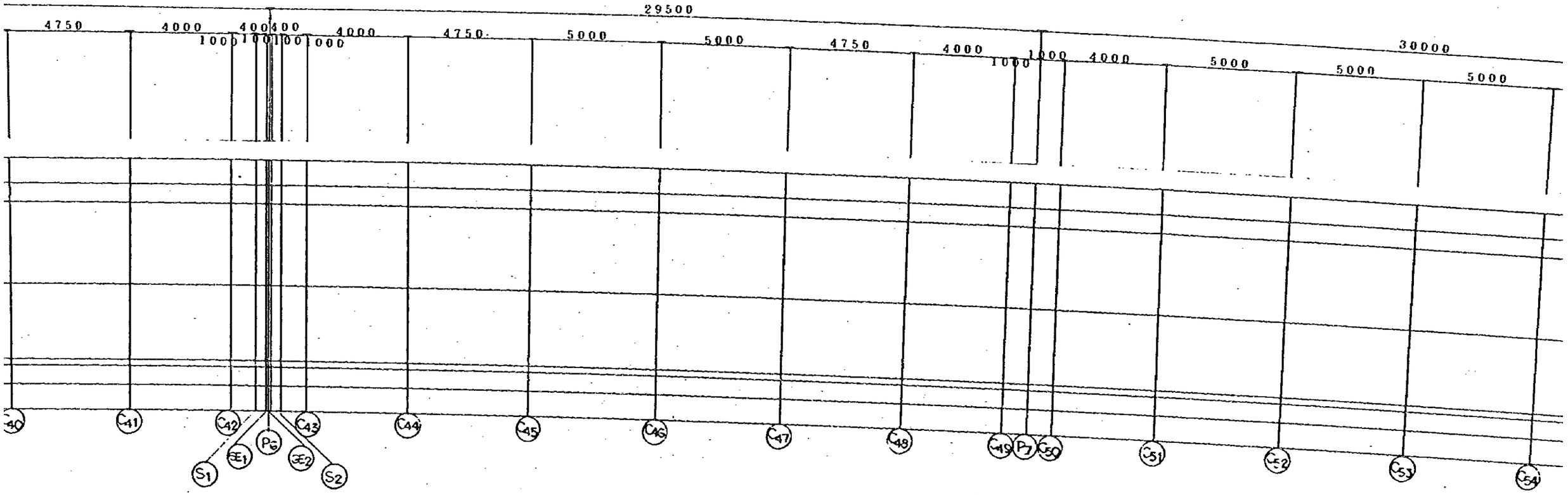

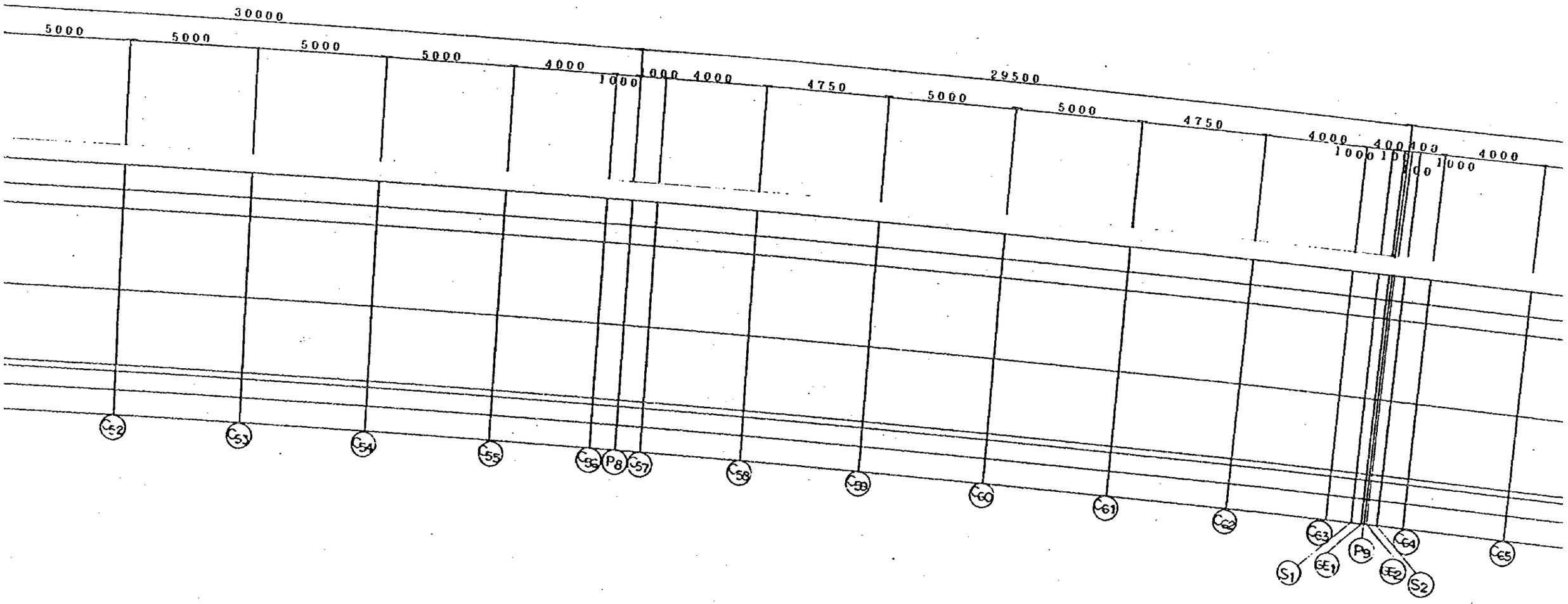
30000
29500
5000
5000
5000
5000
4000
1000
1000
4000
4750
5000
5000
4750
4000
1000
400
400
1000
4000
C52
C53
C54
C55
C56
P8
C57
C58
C59
C60
C61
C62
C63
C64
C65
S1
GE1
P9
GE2
S2

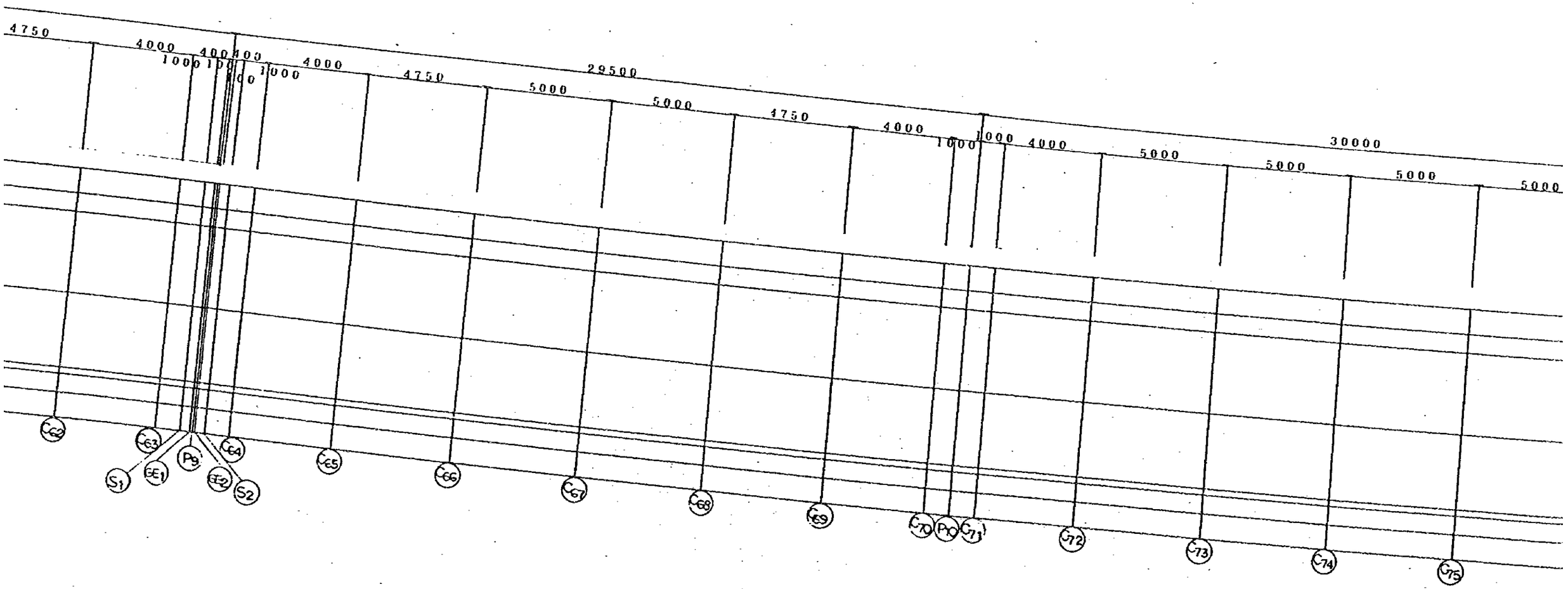
4750
4000
1000
400
400
1000
4000
4750
5000
5000
4750
4000
1000
1000
4000
5000
5000
5000
5000
29500
30000
G62
G63
G64
G65
G66
G67
G68
G69
G70
P10
G71
G72
G73
G74
G75
S1
GE1
P9
GE2
S2

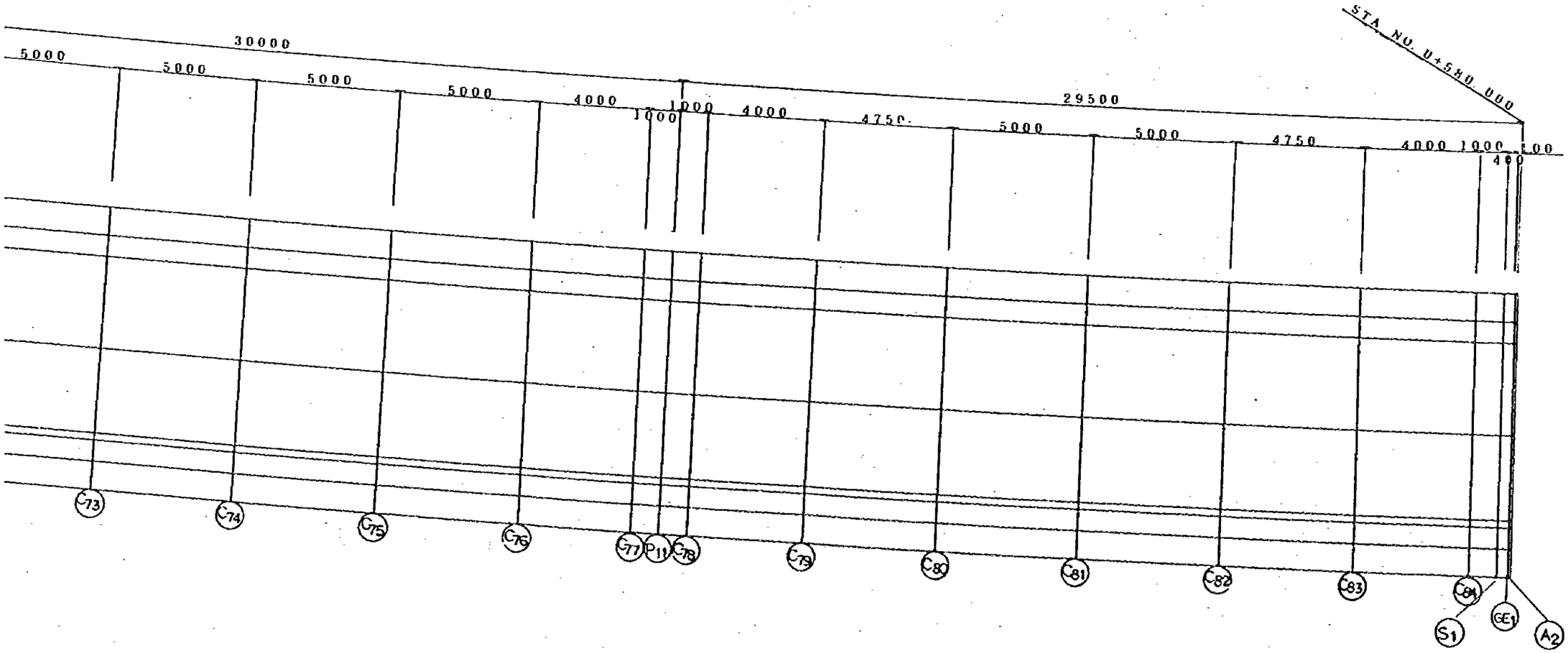

	JAPAN INTERNATIONAL COOPERATION AGENCY (JICA)	CLIENT : MINISTRY OF COMMUNICATIONS, DIRECTORATE GENERAL OF ROADS
		PROJECT: D/D ON ROAD DEVELOPMENT PROJECT ON BATINAH HIGHWAY
	JICA STUDY TEAM PACIFIC CONSULTANTS INTERNATIONAL FUKUYAMA CONSULTANTS INTERNATIONAL	TITLE FRAMING PLAN RA/18 AT A-LINE
		DATE DWG NO. B-3

AQR(A)

SECTION		A1	A1-GE
STATION		0 + 220.00000	0 + 220.1
L4	X	-0.8848	-0.7
	Y	4.9211	4.9
	Z	19.3298	19.3
L3	X	-0.7078	-0.6
	Y	3.9369	3.9
	Z	19.4059	19.4
G2	X	-0.5751	-0.4
	Y	3.1987	3.2
	Z	19.388	19.3
CL(PIER CENTER)	X	0	0.0
	Y	0	0.0
	Z	19.3105	19.3
PGR	X	0.5308	0.6
	Y	-2.9527	-2.
	Z	19.239	19.
G1	X	0.5751	0.6
	Y	-3.1987	-3.
	Z	19.233	19.
L2	X	0.7078	0.8
	Y	-3.9369	-3.9
	Z	19.2152	19.2
L1	X	0.8848	0.9
	Y	-4.9211	-4.9
	Z	19.0913	19.0

NOTES:

AQR(A)

SECTION		A1	A1-GE1	A1-S1	C4	P1	C11	P2	C18	P3-S1	P3-GE1	P3	P3-GE2	P3-S2	C25	P4	C32
STATION		0 + 220.0000	0 + 220.1000	0 + 220.5000	0 + 235.2500	0 + 250.0000	0 + 265.0000	0 + 280.0000	0 + 294.7500	0 + 309.5000	0 + 309.9000	0 + 310.0000	0 + 310.1000	0 + 310.5000	0 + 325.2500	0 + 340.0000	0 + 355.
L4	X	-0.8848	-0.7864	-0.3926	14.2803	28.988	43.981	59.0061	73.8081	88.6377	89.0364	89.1361	89.2358	89.6346	104.4845	119.3447	134.
	Y	4.9211	4.9388	5.0094	7.5152	9.7795	11.8346	13.6396	15.17	16.4581	16.4893	16.4971	16.5049	16.5359	17.5643	18.3489	18
	Z	19.3298	19.3353	19.3574	20.1015	20.8049	21.4526	22.0322	22.5356	22.9732	22.984	22.9867	22.9894	23.0002	23.3674	23.6685	23.
L3	X	-0.7078	-0.6094	-0.2157	14.4406	29.132	44.1085	59.1171	73.9028	88.7155	89.1143	89.214	89.3137	89.7125	104.5454	119.3892	134.
	Y	3.9369	3.9545	4.0252	6.5281	8.7899	10.8427	12.6457	14.1745	15.4611	15.4923	15.5001	15.5079	15.5389	16.5661	17.3499	17.
	Z	19.4059	19.4114	19.4332	20.1765	20.8799	21.5276	22.1072	22.6106	23.0482	23.059	23.0617	23.0644	23.0752	23.4424	23.7435	23.
G2	X	-0.5751	-0.4767	-0.083	14.5608	29.2401	44.2041	59.2003	73.9738	88.7738	89.1726	89.2723	89.372	89.7708	104.5911	119.4227	134.
	Y	3.1987	3.2164	3.287	5.7878	8.0477	10.0989	11.9004	13.4279	14.7134	14.7446	14.7524	14.7602	14.7912	15.8175	16.6006	17.
	Z	19.388	19.3935	19.4151	20.1577	20.8612	21.5089	22.0884	22.5918	23.0294	23.0403	23.043	23.0457	23.0565	23.4236	23.7248	23.
CL(PIER CENTER)	X	0	0.0984	0.4921	15.0816	29.7083	44.6187	59.5611	74.2816	89.0267	89.4255	89.5252	89.6249	90.0237	104.789	119.5674	134.
	Y	0	0.0177	0.0883	2.5798	4.8316	6.8754	8.6705	10.1925	11.4732	11.5045	11.5123	11.52	11.551	12.5736	13.3539	13.
	Z	19.3105	19.3157	19.3365	20.0765	20.7799	21.4276	22.0072	22.5106	22.9481	22.959	22.9617	22.9644	22.9753	23.3424	23.6435	23.
PGR	X	0.5308	0.6293	1.023	15.5623	30.1404	45.0013	59.894	74.5657	89.2602	89.6589	89.7586	89.8583	90.2571	104.9717	119.701	134
	Y	-2.9527	-2.935	-2.8643	-0.3814	1.8629	3.8999	5.689	7.206	8.4823	8.5136	8.5214	8.5291	8.5601	9.5791	10.3568	10.
	Z	19.239	19.244	19.264	20.0015	20.7049	21.3526	21.9322	22.4356	22.8731	22.884	22.8867	22.8895	22.9003	23.2674	23.5685	23.
G1	X	0.5751	0.6735	1.0672	15.6024	30.1764	45.0332	59.9218	74.5893	89.2796	89.6784	89.7781	89.8778	90.2766	104.987	119.7122	134
	Y	-3.1987	-3.181	-3.1104	-0.6282	1.6155	3.652	5.4405	6.9571	8.2331	8.2643	8.2721	8.2799	8.3109	9.3296	10.1071	10.
	Z	19.233	19.238	19.258	19.9952	20.6987	21.3464	21.9259	22.4293	22.8668	22.8777	22.8805	22.8832	22.8941	23.2611	23.5623	23.
L2	X	0.7078	0.8062	1.1999	15.7226	30.2845	45.1288	60.005	74.6604	89.338	89.7368	89.8365	89.9362	90.3349	105.0326	119.7456	134.
	Y	-3.9369	-3.9192	-3.8486	-1.3685	0.8733	2.9081	4.6952	6.2105	7.4853	7.5166	7.5244	7.5322	7.5632	8.581	9.3578	9.
	Z	19.2152	19.2201	19.2398	19.9765	20.6799	21.3276	21.9072	22.4106	22.848	22.859	22.8617	22.8645	22.8753	23.2424	23.5435	23.
L1	X	0.8848	0.9832	1.3769	15.8828	30.4285	45.2564	60.116	74.755	89.4158	89.8146	89.9143	90.014	90.4128	105.0935	119.7901	134.
	Y	-4.9211	-4.9034	-4.8328	-2.3556	-0.1162	1.9163	3.7013	5.215	6.4884	6.5196	6.5274	6.5352	6.5662	7.5828	8.3588	8
	Z	19.0913	19.0962	19.1156	19.8515	20.5549	21.2026	21.7822	22.2856	22.723	22.734	22.7367	22.7395	22.7504	23.1174	23.4185	23

FRAMING PLAN AT RA/18 AQR (A-LINE)

I	P3	P3-GE2	P3-S2	C25	P4	C32	P5	C39	P6-S1	P6-GE1	P6	P6-GE2	P6-S2	C46	P7	C53	P8	C60	P9-S1	P9-(
0000	0 + 310.0000	0 + 310.1000	0 + 310.5000	0 + 325.2500	0 + 340.0000	0 + 355.0000	0 + 370.0000	0 + 384.7500	0 + 399.5000	0 + 399.9000	0 + 400.0000	0 + 400.1000	0 + 400.5000	0 + 415.2500	0 + 430.0000	0 + 445.0000	0 + 460.0000	0 + 474.7500	0 + 489.5000	0 + 48
164	89.1361	89.2358	89.6346	104.4845	119.3447	134.4679	149.5982	164.4791	179.3631	179.763	179.863	179.963	180.3629	195.2412	210.1055	225.2079	240.2921	255.1032	269.893	270
193	16.4971	16.5049	16.5359	17.5643	18.3489	18.897	19.1929	19.238	19.0391	19.0304	19.0282	19.026	19.017	18.5578	17.8549	16.8905	15.6744	14.2337	12.5499	12
184	22.9867	22.9894	23.0002	23.3674	23.6685	23.9072	24.0776	24.1788	24.214	24.214	24.214	24.214	24.214	24.1788	24.0776	23.9072	23.6589	23.2735	22.822	22
143	89.214	89.3137	89.7125	104.5454	119.3892	134.4958	149.6094	164.4739	179.341	179.7409	179.8409	179.9409	180.3408	195.2022	210.0501	225.1359	240.2035	254.9982	269.7712	270
923	15.5001	15.5079	15.5389	16.5661	17.3499	17.8974	18.193	18.238	18.0394	18.0307	18.0284	18.0262	18.0173	17.5585	16.8565	15.8931	14.6784	13.2392	11.5573	11
059	23.0617	23.0644	23.0752	23.4424	23.7435	23.9822	24.1526	24.2538	24.289	24.289	24.289	24.289	24.289	24.2538	24.1526	23.9822	23.7351	23.3602	22.9193	22
726	89.2723	89.372	89.7708	104.5911	119.4227	134.5167	149.6178	164.47	179.3244	179.7244	179.8243	179.9243	180.3242	195.1729	210.0086	225.0818	240.137	254.9195	269.6799	270
446	14.7524	14.7602	14.7912	15.8175	16.6006	17.1477	17.443	17.488	17.2895	17.2808	17.2786	17.2764	17.2674	16.8091	16.1076	15.145	13.9313	12.4933	10.8129	10
403	23.043	23.0457	23.0565	23.4236	23.7248	23.9634	24.1339	24.235	24.2702	24.2702	24.2702	24.2702	24.2702	24.235	24.1339	23.9634	23.7173	23.3503	22.9172	22
255	89.5252	89.6249	90.0237	104.789	119.5674	134.6074	149.6543	164.4533	179.2526	179.6525	179.7525	179.8525	180.2524	195.046	209.8285	224.8477	239.8488	254.5783	269.284	26
045	11.5123	11.52	11.551	12.5736	13.3539	13.8989	14.1932	14.2381	14.0403	14.0316	14.0294	14.0272	14.0182	13.5616	12.8626	11.9035	10.6941	9.2613	7.5871	
959	22.9617	22.9644	22.9753	23.3424	23.6435	23.8822	24.0526	24.1538	24.189	24.189	24.189	24.189	24.189	24.1538	24.0526	23.8822	23.6399	23.3072	22.9084	23
589	89.7586	89.8583	90.2571	104.9717	119.701	134.691	149.688	164.4378	179.1863	179.5862	179.6862	179.7861	180.186	194.9288	209.6622	224.6316	239.5829	254.2634	268.9186	269
136	8.5214	8.5291	8.5601	9.5791	10.3568	10.9001	11.1934	11.2381	11.0411	11.0324	11.0302	11.0279	11.019	10.5639	9.8672	8.9113	7.7059	6.2779	4.6094	
884	22.8867	22.8895	22.9003	23.2674	23.5685	23.8072	23.9776	24.0788	24.114	24.114	24.114	24.114	24.114	24.0788	23.9776	23.8072	23.5685	23.2674	22.9003	23
784	89.7781	89.8778	90.2766	104.987	119.7122	134.698	149.6908	164.4365	179.1807	179.5807	179.6806	179.7806	180.1805	194.9191	209.6484	224.6135	239.5607	254.2372	268.8881	269
643	8.2721	8.2799	8.3109	9.3296	10.1071	10.6502	10.9434	10.9881	10.7911	10.7824	10.7802	10.778	10.769	10.3141	9.6176	8.6619	7.4569	6.0293	4.3613	
3777	22.8805	22.8832	22.8941	23.2611	23.5623	23.8009	23.9714	24.0725	24.1077	24.1077	24.1077	24.1077	24.1077	24.0725	23.9714	23.8009	23.5626	23.2641	22.8996	23
7368	89.8365	89.9362	90.3349	105.0326	119.7456	134.7189	149.6992	164.4326	179.1642	179.5641	179.664	179.764	180.1639	194.8898	209.6068	224.5595	239.4942	254.1584	268.7968	269
5166	7.5244	7.5322	7.5632	8.581	9.3578	9.9005	10.1935	10.2381	10.0413	10.0326	10.0304	10.0282	10.0192	9.5646	8.8688	7.9138	6.7099	5.2834	3.6169	
.859	22.8617	22.8645	22.8753	23.2424	23.5435	23.7822	23.9526	24.0538	24.089	24.089	24.089	24.089	24.089	24.0538	23.9526	23.7822	23.5448	23.2541	22.8976	
8146	89.9143	90.014	90.4128	105.0935	119.7901	134.7468	149.7104	164.4274	179.1421	179.542	179.6419	179.7419	180.1418	194.8508	209.5514	224.4875	239.4056	254.0535	268.675	2
5196	6.5274	6.5352	6.5662	7.5828	8.3588	8.9009	9.1936	9.2381	9.0416	9.0329	9.0306	9.0284	9.0195	8.5654	7.8703	6.9164	5.7138	4.2889	2.6243	
2.734	22.7367	22.7395	22.7504	23.1174	23.4185	23.6572	23.8276	23.9288	23.964	23.964	23.964	23.964	23.964	23.9288	23.8276	23.6572	23.421	23.1409	22.7949	2

6	P7	C53	P8	C60	P9-S1	P9-GE1	P9	P9-GE2	P9-S2	C67	P10	C74	P11	C81	A2-S1	A2-GE1	A2
5.2500	0 + 430.0000	0 + 445.0000	0 + 460.0000	0 + 474.7500	0 + 489.5000	0 + 489.9000	0 + 490.0000	0 + 490.1000	0 + 490.5000	0 + 505.2500	0 + 520.0000	0 + 535.0000	0 + 550.0000	0 + 564.7500	0 + 579.5000	0 + 579.9000	0 + 580.0000
.2412	210.1055	225.2079	240.2921	255.1032	269.893	270.2901	270.3893	270.4886	270.8856	285.4627	300.0117	314.8291	329.6654	344.2694	358.8811	359.2808	359.3807
.5578	17.8549	16.8905	15.6744	14.2337	12.5499	12.5013	12.4891	12.4769	12.428	10.6604	9.1053	7.7442	6.6055	5.7028	5.0159	5.0001	4.9962
.1788	24.0776	23.9072	23.6589	23.2735	22.822	22.8089	22.8057	22.8024	22.7893	22.2674	21.6797	21.0526	20.4049	19.7015	18.9642	18.944	18.939
.2022	210.0501	225.1359	240.2035	254.9982	269.7712	270.1683	270.2675	270.3668	270.7638	285.349	299.9127	314.7451	329.5963	344.215	358.842	359.2417	359.3416
.5585	16.8565	15.8931	14.6784	13.2392	11.5573	11.5087	11.4965	11.4843	11.4355	9.6669	8.1102	6.7477	5.6078	4.7043	4.0166	4.0009	3.9969
.2538	24.1526	23.9822	23.7351	23.3602	22.9193	22.9065	22.9033	22.9001	22.8872	22.3759	21.7987	21.1776	20.5299	19.8265	19.0892	19.069	19.064
.1729	210.0086	225.0818	240.137	254.9195	269.6799	270.0769	270.1762	270.2754	270.6724	285.2638	299.8385	314.6821	329.5445	344.1743	358.8127	359.2124	359.3123
.8091	16.1076	15.145	13.9313	12.4933	10.8129	10.7643	10.7521	10.7399	10.6911	8.9217	7.3639	6.0004	4.8596	3.9554	3.2672	3.2514	3.2475
24.235	24.1339	23.9634	23.7173	23.3503	22.9172	22.9047	22.9015	22.8984	22.8857	22.3823	21.813	21.1964	20.5487	19.8452	19.1079	19.0878	19.0828
95.046	209.8285	224.8477	239.8488	254.5783	269.284	269.681	269.7803	269.8795	270.2766	284.8946	299.5169	314.4091	329.3201	343.9977	358.6856	359.0853	359.1852
3.5616	12.8626	11.9035	10.6941	9.2613	7.5871	7.5385	7.5263	7.5141	7.4653	5.6928	4.1299	2.7619	1.6174	0.7102	0.0197	0.0039	0
4.1538	24.0526	23.8822	23.6399	23.3072	22.9084	22.8968	22.8938	22.8909	22.8791	22.41	21.875	21.2776	20.6299	19.9265	19.1891	19.169	19.164
4.9288	209.6622	224.6316	239.5829	254.2634	268.9186	269.3156	269.4149	269.5141	269.9111	284.5538	299.2201	314.1571	329.113	343.8347	358.5683	358.968	359.0679
0.5639	9.8672	8.9113	7.7059	6.2779	4.6094	4.5608	4.5487	4.5365	4.4876	2.7122	1.1446	-0.2275	-1.3754	-2.2854	-2.978	-2.9938	-2.9977
4.0788	23.9776	23.8072	23.5685	23.2674	22.9003	22.8895	22.8867	22.884	22.8731	22.4356	21.9322	21.3526	20.7049	20.0015	19.264	19.244	19.239
4.9191	209.6484	224.6135	239.5607	254.2372	268.8881	269.2852	269.3844	269.4837	269.8807	284.5254	299.1954	314.1361	329.0957	343.8212	358.5586	358.9582	359.0582
0.3141	9.6176	8.6619	7.4569	6.0293	4.3613	4.3127	4.3005	4.2883	4.2395	2.4638	0.8958	-0.4766	-1.6249	-2.535	-3.2278	-3.2436	-3.2475
4.0725	23.9714	23.8009	23.5626	23.2641	22.8996	22.8888	22.8861	22.8834	22.8725	22.4377	21.9369	21.3589	20.7112	20.0077	19.2702	19.2502	19.2453
4.8898	209.6068	224.5595	239.4942	254.1584	268.7968	269.1938	269.2931	269.3923	269.7893	284.4402	299.1212	314.0731	329.0439	343.7804	358.5292	358.9289	359.0289
9.5646	8.8688	7.9138	6.7099	5.2834	3.6169	3.5683	3.5561	3.5439	3.4951	1.7186	0.1495	-1.224	-2.3731	-3.2839	-3.9773	-3.993	-3.9969
4.0538	23.9526	23.7822	23.5448	23.2541	22.8976	22.887	22.8844	22.8817	22.871	22.4441	21.9512	21.3776	20.7299	20.0265	19.289	19.269	19.264
4.8508	209.5514	224.4875	239.4056	254.0535	268.675	269.072	269.1713	269.2705	269.6675	284.3266	299.0222	313.9891	328.9749	343.7261	358.4901	358.8898	358.9898
8.5654	7.8703	6.9164	5.7138	4.2889	2.6243	2.5757	2.5635	2.5514	2.5025	0.7251	-0.8456	-2.2205	-3.3707	-4.2824	-4.9765	-4.9923	-4.9962
3.9288	23.8276	23.6572	23.421	23.1409	22.7949	22.7846	22.782	22.7794	22.769	22.3526	21.8703	21.3026	20.6549	19.9515	19.214	19.194	19.189

	C81	A2-S1	A2-GE1	A2
X	0 + 564.7500	0 + 579.5000	0 + 579.9000	0 + 580.0000
1	344.2694	358.8811	359.2808	359.3807
5	5.7028	5.0159	5.0001	4.9962
9	19.7015	18.9642	18.944	18.939
3	344.215	358.842	359.2417	359.3416
8	4.7043	4.0166	4.0009	3.9969
9	19.8265	19.0892	19.069	19.064
5	344.1743	358.8127	359.2124	359.3123
6	3.9554	3.2672	3.2514	3.2475
7	19.8452	19.1079	19.0878	19.0828
1	343.9977	358.6856	359.0853	359.1852
4	0.7102	0.0197	0.0039	0
9	19.9265	19.1891	19.169	19.164
3	343.8347	358.5683	358.968	359.0679
4	-2.2854	-2.978	-2.9938	-2.9977
9	20.0015	19.264	19.244	19.239
7	343.8212	358.5586	358.9582	359.0582
9	-2.535	-3.2278	-3.2436	-3.2475
2	20.0077	19.2702	19.2502	19.2453
9	343.7804	358.5292	358.9289	359.0289
1	-3.2839	-3.9773	-3.993	-3.9969
9	20.0265	19.289	19.269	19.264
9	343.7261	358.4901	358.8898	358.9898
7	-4.2824	-4.9765	-4.9923	-4.9962
9	19.9515	19.214	19.194	19.189

	JAPAN INTERNATIONAL COOPERATION AGENCY (JICA)	CLIENT : MINISTRY OF COMMUNICATIONS, DIRECTORATE GENERAL OF ROADS
		PROJECT: D/D ON ROAD DEVELOPMENT PROJECT ON BATANAH HIGHWAY
	JICA STUDY TEAM PACIFIC CONSULTANTS INTERNATIONAL FUKUYAMA CONSULTANTS INTERNATIONAL	TITLE CO-ORDINATE LIST RA/18 AT A-LINE
		DATE / DWGNO. B-4

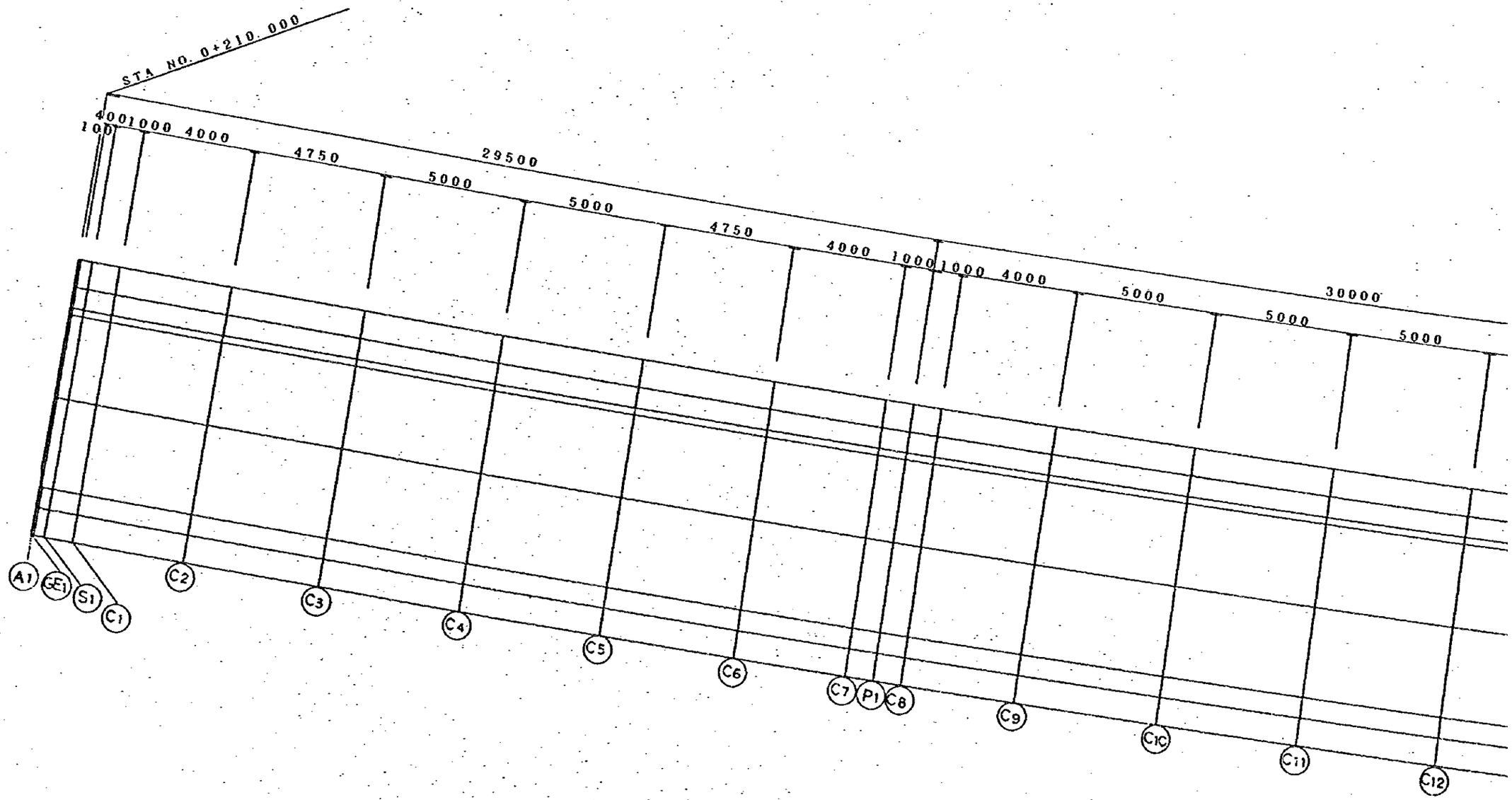
STA NO. 0+210.000
100
4000
1000
4000
4750
5000
5000
4750
4000
1000
1000
4000
5000
5000
5000
30000
A1
GE1
S1
C1
C2
C3
C4
C5
C6
C7
P1
C8
C9
C10
C11
C12

NOTES:

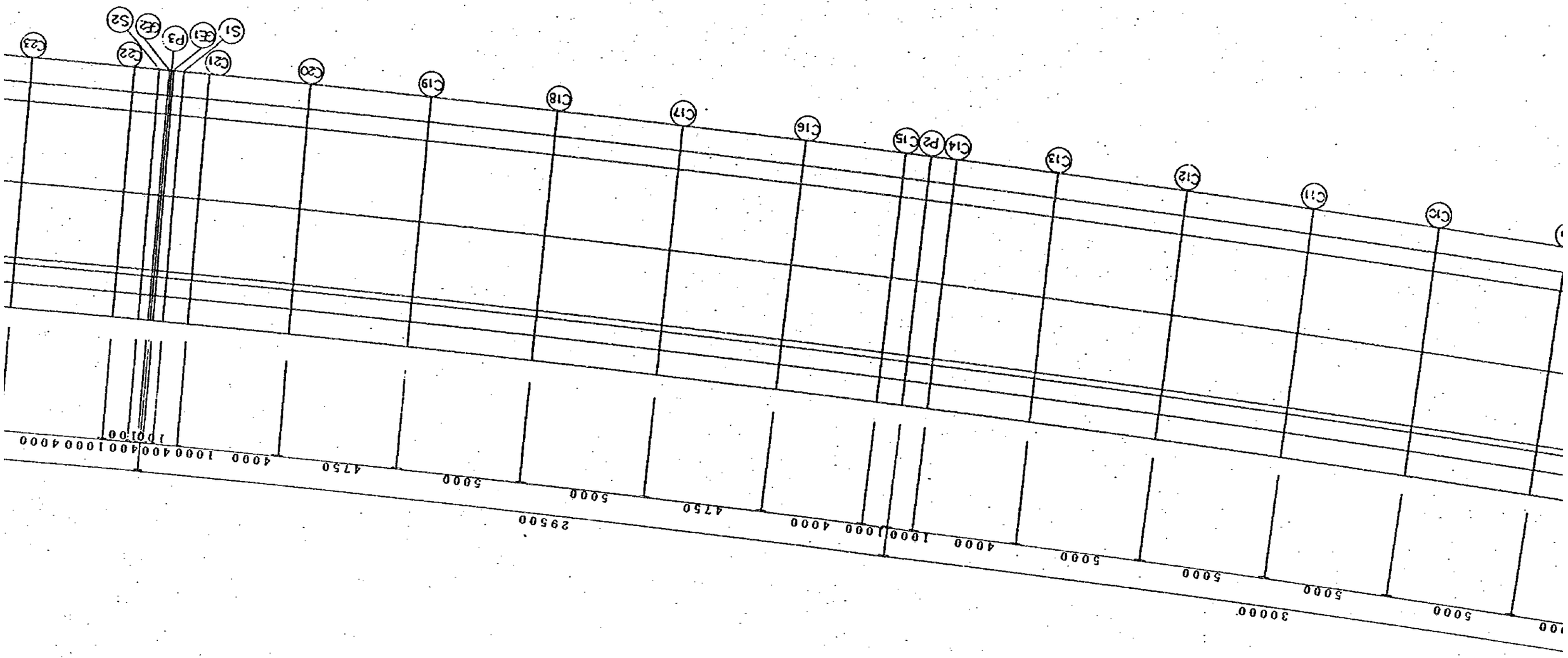
C23
C22
C21
C20
C19
C18
C17
C16
C15
C14
C13
C12
C11
C1C
S2
Ez2
P3
Ez1
S1
1000 400 400 1000 4000
4000 1000 400 4750
5000
5000
4750
1000 4000 1000
4000
5000
5000
5000
30000
5000

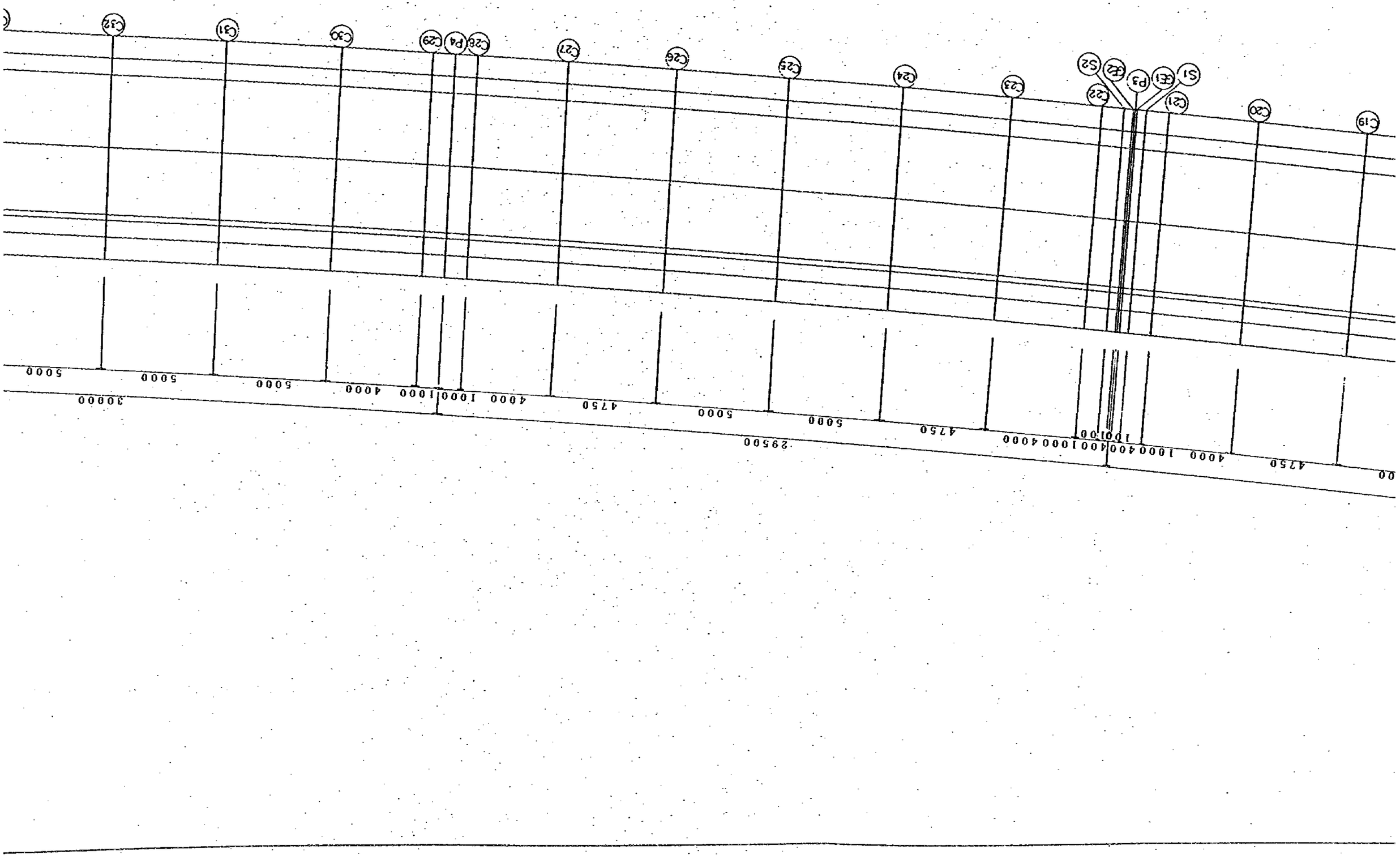
C32
C31
C30
C29
P4
C28
C27
C26
C25
C24
C23
C22
C21
P3
E1
E2
S2
S1
C20
C19
5000
5000
5000
4000
1000
1000
4000
4750
5000
5000
4750
1001.00
400
1000
4000
1000
4750
00
30000
29500

RA/18-A

B-LINE

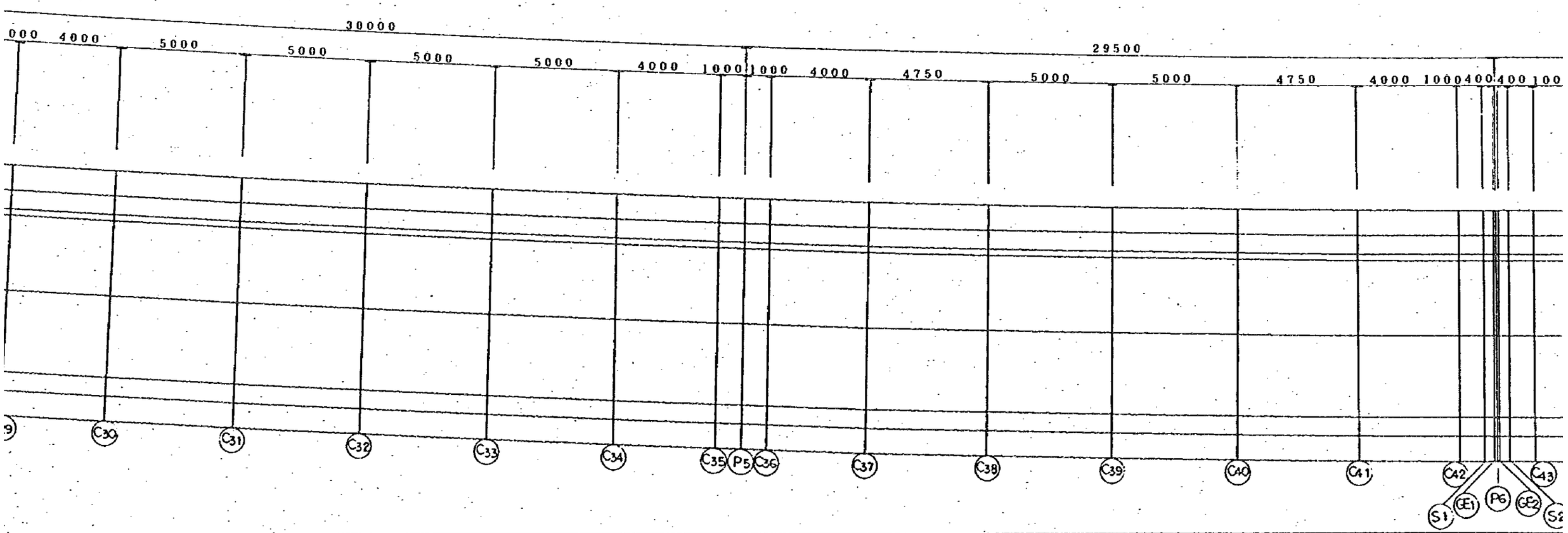
30000
000 4000
5000
5000
5000
5000
4000 1000
1000 4000
4750
5000
29500
5000
4750
4000 1000
400
400 100
C30
C31
C32
C33
C34
C35
P5
C36
C37
C38
C39
C40
C41
C42
C43
S1
GE1
P6
GE2
S2

RA/18-AQR

B-LINE

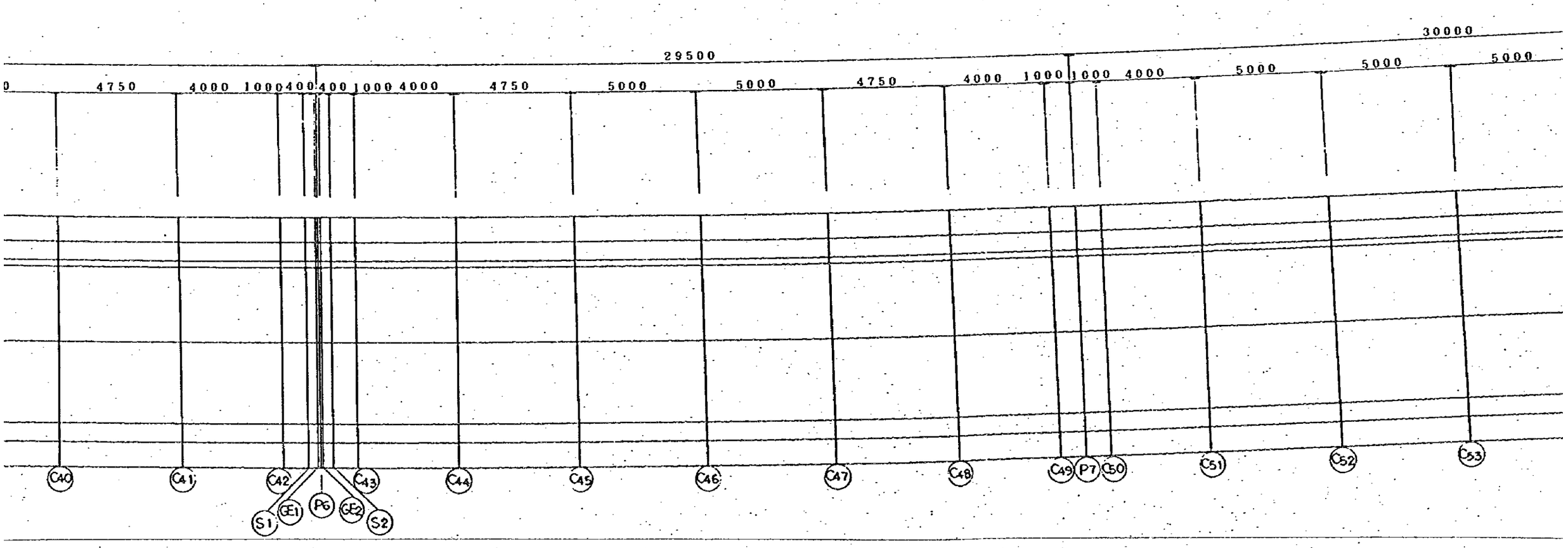

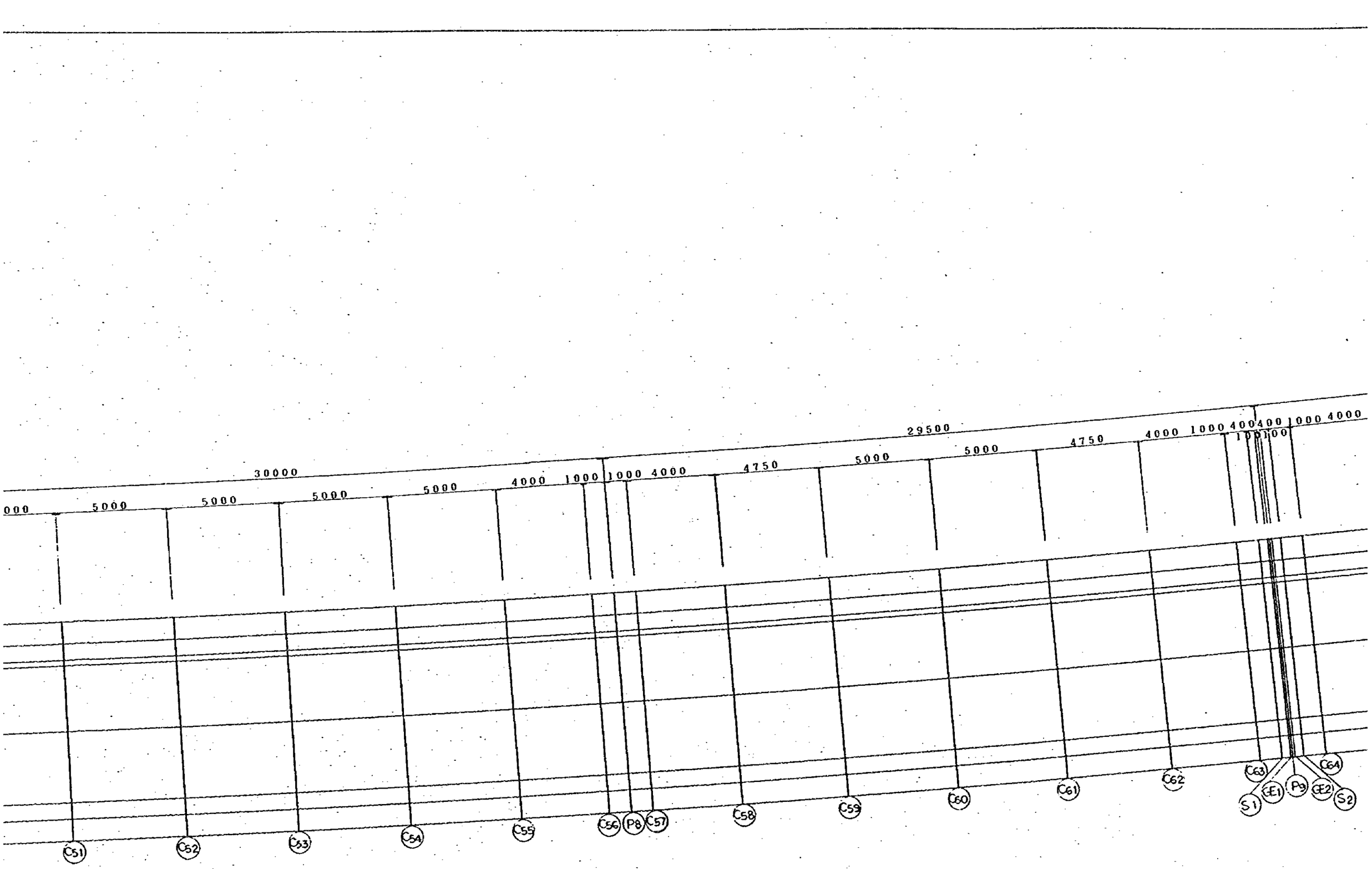
30000
5000
5000
5000
5000
4000
1000
1000
4000
4750
5000
5000
4750
4000
1000
400
400
1000
4000
100
100
C51
C52
C53
C54
C55
C56
P8
C57
C58
C59
C60
C61
C62
C63
C64
S1
CE1
P9
CE2
S2

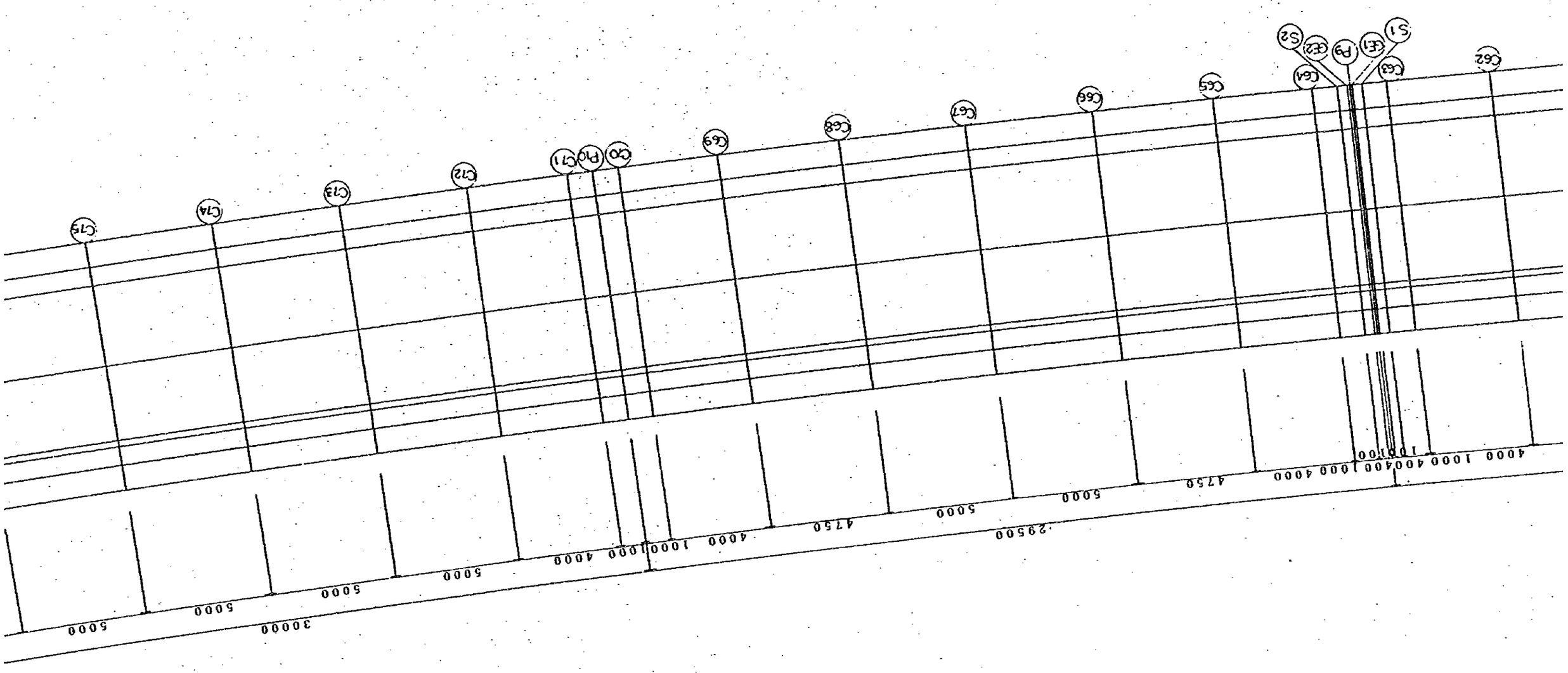
C75
C74
C73
C72
C71
C70
C69
C68
C67
C66
C65
C64
C63
C62
C61
P9
S2
S1
5000
5000
5000
5000
1000
1000
4000
4750
5000
5000
4750
4000
1000
1000
4000
1000
1000
4000
4000
1000
1000
4000
1000
1000
4000
30000
29500

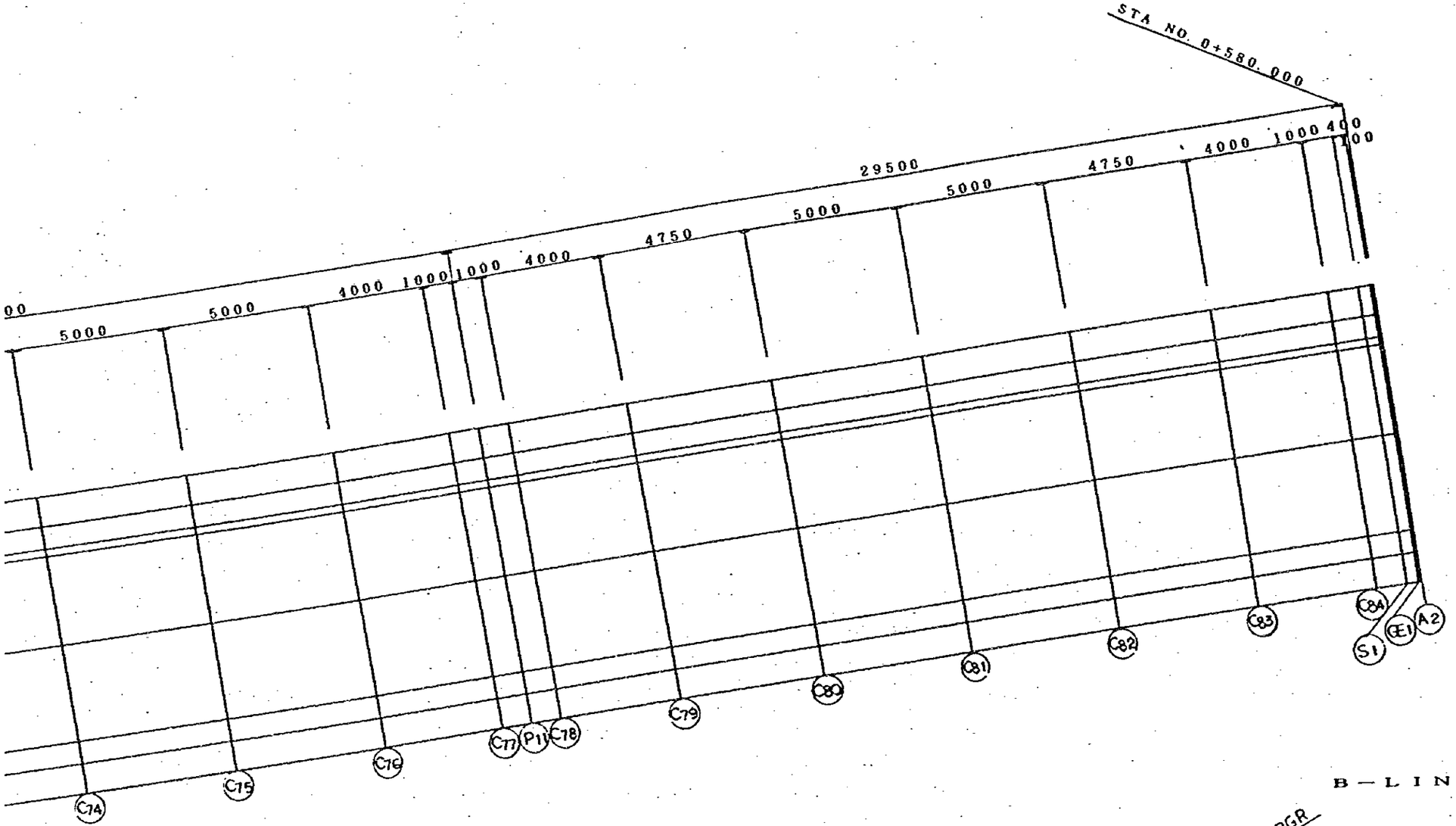

B — L I N E

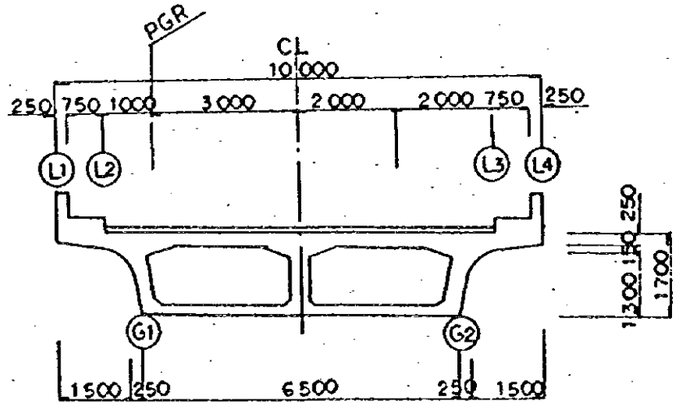

	JAPAN INTERNATIONAL COOPERATION AGENCY (JICA)	CLIENT: MINISTRY OF COMMUNICATIONS, DIRECTORATE GENERAL OF ROADS
		PROJECT: D/D ON ROAD DEVELOPMENT PROJECT ON BATINAH HIGHWAY
	JICA STUDY TEAM PACIFIC CONSULTANTS INTERNATIONAL FUKUYAMA CONSULTANTS INTERNATIONAL	TITLE: FRAMING PLAN RA/18 AT B-LINE
		DATE / DWG NO. B-5

AQR(B)

SECTION		A1	A1-
STATION		0 + 210.0000	0 + 2
L1	X	0.9843	
	Y	4.9021	
	Z	24.482	
L2	X	0.7875	
	Y	3.9217	
	Z	24.607	
G1	X	0.6398	
	Y	3.1864	
	Z	24.6258	2
PGR	X	0.5906	
	Y	2.9413	
	Z	24.632	
CL(PIER CENTER	X	0	
	Y	0	-
	Z	24.707	
G2	X	-0.6397	-
	Y	-3.1864	-
	Z	24.7883	2
L3	X	-0.7874	-
	Y	-3.9218	-
	Z	24.807	
L4	X	-0.9842	-
	Y	-4.9022	-
	Z	24.732	

NOTES:

AQR(B)

SECTION		A1	A1-GE1	A1-S1	C4	P1	C11	P2	C18	P3-S1	P3-GE1	P3	P3-GE2	P3-S2	C25	P4	
STATION		0 + 210.0000	0 + 210.1000	0 + 210.5000	0 + 225.2500	0 + 240.0000	0 + 255.0000	0 + 270.0000	0 + 284.7500	0 + 299.5000	0 + 299.9000	0 + 300.0000	0 + 300.1000	0 + 300.5000	0 + 315.2500	0 + 330.0000	0
L1	X	0.9843	1.0824	1.4746	15.9273	30.4247	45.2083	60.0288	74.6341	89.266	89.6641	89.7636	89.8631	90.2612	104.9184	119.5963	
	Y	4.9021	4.8825	4.8038	2.0333	-0.5002	-2.8327	-4.9185	-6.7283	-8.2985	-8.3378	-8.3476	-8.3574	-8.3964	-9.7103	-10.7838	
	Z	24.482	24.486	24.502	25.092	25.667	26.1882	26.642	27.0224	27.3374	27.3451	27.347	27.3489	27.3565	27.6019	27.782	
L2	X	0.7875	0.8855	1.2777	15.7471	30.2606	45.0607	59.8977	74.5193	89.1681	89.5661	89.6656	89.7652	90.1632	104.8373	119.5315	
	Y	3.9217	3.902	3.8234	1.0497	-1.4867	-3.8217	-5.9098	-7.7217	-9.2936	-9.333	-9.3428	-9.3526	-9.3916	-10.707	-11.7817	
	Z	24.607	24.611	24.627	25.217	25.792	26.3132	26.767	27.1474	27.4625	27.4701	27.472	27.4739	27.4815	27.7269	27.907	
G1	X	0.6398	0.7379	1.1301	15.612	30.1376	44.95	59.7993	74.4331	89.0946	89.4926	89.5921	89.6917	90.0897	104.7765	119.4829	
	Y	3.1864	3.1667	3.0881	0.3119	-2.2265	-4.5635	-6.6533	-8.4667	-10.04	-10.0794	-10.0892	-10.099	-10.138	-11.4545	-12.5302	
	Z	24.6258	24.6298	24.6458	25.2358	25.8107	26.332	26.7858	27.1661	27.4812	27.4888	27.4908	27.4926	27.5002	27.7456	27.9258	
PGR	X	0.5906	0.6886	1.0808	15.5669	30.0965	44.9131	59.7665	74.4044	89.0701	89.4681	89.5676	89.6672	90.0652	104.7562	119.4667	
	Y	2.9413	2.9216	2.843	0.066	-2.4731	-4.8108	-6.9012	-8.7151	-10.2888	-10.3282	-10.338	-10.3478	-10.3868	-11.7037	-12.7796	
	Z	24.632	24.636	24.652	25.242	25.817	26.3383	26.792	27.1724	27.4875	27.4951	27.497	27.4989	27.5065	27.7519	27.932	
CL(PIER CENTER	X	0	0.0981	0.4903	15.0263	29.6043	44.4703	59.3732	74.0599	88.7761	89.1741	89.2737	89.3732	89.7713	104.5128	119.2724	
	Y	0	-0.0197	-0.0983	-2.8848	-5.4325	-7.7779	-9.8753	-11.6952	-13.2744	-13.3137	-13.3235	-13.3333	-13.3724	-14.6938	-15.7733	
	Z	24.707	24.711	24.7269	25.317	25.892	26.4132	26.867	27.2474	27.5625	27.5701	27.572	27.5739	27.5814	27.8269	28.007	
G2	X	-0.6397	-0.5417	-0.1495	14.4406	29.0711	43.9905	58.9471	73.6867	88.4576	88.8557	88.9552	89.0547	89.4528	104.2492	119.0619	
	Y	-3.1864	-3.2061	-3.2847	-6.0816	-8.6384	-10.9923	-13.0972	-14.9237	-16.5088	-16.5481	-16.5579	-16.5677	-16.6067	-17.9331	-19.0165	
	Z	24.7883	24.7922	24.8081	25.3983	25.9733	26.4945	26.9483	27.3286	27.6438	27.6514	27.6532	27.6551	27.6626	27.9081	28.0883	
L3	X	-0.7874	-0.6893	-0.2971	14.3054	28.948	43.8798	58.8488	73.6005	88.3841	88.7822	88.8817	88.9812	89.3793	104.1884	119.0133	
	Y	-3.9218	-3.9414	-4.02	-6.8194	-9.3783	-11.7341	-13.8408	-15.6688	-17.2551	-17.2945	-17.3043	-17.3141	-17.3531	-18.6806	-19.7649	
	Z	24.807	24.811	24.8268	25.417	25.992	26.5133	26.967	27.3474	27.6625	27.6701	27.672	27.6739	27.6814	27.9269	28.107	
L4	X	-0.9842	-0.8862	-0.494	14.1252	28.784	43.7322	58.7177	73.4857	88.2861	88.6842	88.7837	88.8832	89.2813	104.1072	118.9485	
	Y	-4.9022	-4.9219	-5.0005	-7.803	-10.3647	-12.7232	-14.8321	-16.6621	-18.2503	-18.2897	-18.2995	-18.3093	-18.3483	-19.6773	-20.7628	
	Z	24.732	24.736	24.7518	25.342	25.917	26.4383	26.892	27.2724	27.5875	27.5951	27.597	27.5989	27.6064	27.8519	28.032	

FRAMING PLAN AT RA/18 AQR (B-LINE)

-GE1	P3	P3-GE2	P3-S2	C25	P4	C32	P5	C39	P6-S1	P6-GE1	P6	P6-GE2	P6-S2	C46	P7	C53	P8	C60	P9-S1
299.9000	0 + 300.0000	0 + 300.1000	0 + 300.5000	0 + 315.2500	0 + 330.0000	0 + 345.0000	0 + 360.0000	0 + 374.7500	0 + 389.5000	0 + 389.9000	0 + 390.0000	0 + 390.1000	0 + 390.5000	0 + 405.2500	0 + 420.0000	0 + 435.0000	0 + 450.0000	0 + 464.7500	0 + 479.5000
89.6641	89.7636	89.8631	90.2612	104.9184	119.5963	134.5389	149.4935	164.2066	178.9222	179.3222	179.4222	179.5222	179.9222	194.6373	209.349	224.3013	239.2407	253.9145	268.5667
-8.3378	-8.3476	-8.3574	-8.3964	-9.7103	-10.7838	-11.6288	-12.2245	-12.5672	-12.6688	-12.6682	-12.668	-12.6678	-12.6669	-12.5109	-12.1138	-11.4627	-10.5625	-9.4346	-8.0666
27.3451	27.347	27.3489	27.3565	27.6019	27.782	27.8982	27.947	27.9291	27.846	27.8428	27.842	27.8412	27.838	27.6851	27.467	27.1783	26.822	26.4059	25.9245
89.5661	89.6656	89.7652	90.1632	104.8373	119.5315	134.4908	149.462	164.1915	178.924	179.324	179.424	179.524	179.924	194.6561	209.3842	224.3531	239.3092	253.9993	268.6684
-9.333	-9.3428	-9.3526	-9.3916	-10.707	-11.7817	-12.6276	-13.224	-13.5671	-13.6688	-13.6682	-13.668	-13.6678	-13.6669	-13.5107	-13.1132	-12.4613	-11.5601	-10.431	-9.0614
27.4701	27.472	27.4739	27.4815	27.7269	27.907	28.0232	28.072	28.0541	27.971	27.9678	27.967	27.9662	27.963	27.8101	27.592	27.3032	26.947	26.5309	26.0495
89.4926	89.5921	89.6917	90.0897	104.7765	119.4829	134.4547	149.4384	164.1802	178.9254	179.3254	179.4254	179.5254	179.9254	194.6702	209.4106	224.392	239.3605	254.0629	268.7446
-10.0794	-10.0892	-10.099	-10.138	-11.4545	-12.5302	-13.3767	-13.9736	-14.317	-14.4188	-14.4182	-14.418	-14.4178	-14.4169	-14.2606	-13.8627	-13.2103	-12.3084	-11.1783	-9.8075
27.4888	27.4908	27.4926	27.5002	27.7456	27.9258	28.042	28.0907	28.0729	27.9897	27.9865	27.9858	27.9849	27.9817	27.8289	27.6108	27.322	26.9657	26.5496	26.0682
89.4681	89.5676	89.6672	90.0652	104.7562	119.4667	134.4426	149.4306	164.1764	178.9259	179.3259	179.4259	179.5259	179.9259	194.6749	209.4193	224.405	239.3776	254.0841	268.7701
-10.3282	-10.338	-10.3478	-10.3868	-11.7037	-12.7796	-13.6264	-14.2235	-14.567	-14.6688	-14.6682	-14.668	-14.6678	-14.6669	-14.5106	-14.1125	-13.46	-12.5578	-11.4274	-10.0562
27.4951	27.497	27.4989	27.5065	27.7519	27.932	28.0483	28.097	28.0791	27.996	27.9928	27.992	27.9912	27.988	27.8351	27.617	27.3282	26.972	26.5559	26.0745
89.1741	89.2737	89.3732	89.7713	104.5128	119.2724	134.2982	149.3361	164.1311	178.9314	179.3314	179.4314	179.5314	179.9314	194.7313	209.5249	224.5605	239.583	254.3385	269.0751
-13.3137	-13.3235	-13.3333	-13.3724	-14.6938	-15.7733	-16.623	-17.222	-17.5667	-17.6688	-17.6682	-17.668	-17.6678	-17.6669	-17.51	-17.1107	-16.456	-15.5508	-14.4166	-13.0407
27.5701	27.572	27.5739	27.5814	27.8269	28.007	28.1232	28.172	28.1541	28.0709	28.0678	28.067	28.0662	28.063	27.9101	27.692	27.4032	27.047	26.6309	26.1494
88.8557	88.9552	89.0547	89.4528	104.2492	119.0619	134.1418	149.2338	164.0821	178.9374	179.3374	179.4374	179.5374	179.9374	194.7923	209.6392	224.7289	239.8055	254.6141	269.4055
-16.5481	-16.5579	-16.5677	-16.6067	-17.9331	-19.0165	-19.8692	-20.4704	-20.8163	-20.9188	-20.9181	-20.918	-20.9178	-20.9169	-20.7595	-20.3587	-19.7016	-18.7931	-17.6549	-16.2738
27.6514	27.6532	27.6551	27.6626	27.9081	28.0883	28.2045	28.2532	28.2354	28.1522	28.149	28.1483	28.1475	28.1442	27.9914	27.7733	27.4845	27.1282	26.7121	26.2306
88.7822	88.8817	88.9812	89.3793	104.1884	119.0133	134.1057	149.2102	164.0707	178.9388	179.3388	179.4388	179.5388	179.9388	194.8064	209.6656	224.7678	239.8569	254.6777	269.4818
-17.2945	-17.3043	-17.3141	-17.3531	-18.6806	-19.7649	-20.6183	-21.22	-21.5662	-21.6688	-21.6681	-21.668	-21.6678	-21.6669	-21.5093	-21.1082	-20.4506	-19.5414	-18.4022	-17.0199
27.6701	27.672	27.6739	27.6814	27.9269	28.107	28.2232	28.272	28.2541	28.1709	28.1678	28.167	28.1662	28.163	28.0101	27.792	27.5032	27.147	26.7309	26.2493
88.6842	88.7837	88.8832	89.2813	104.1072	118.9485	134.0576	149.1787	164.0556	178.9407	179.3407	179.4407	179.5407	179.9407	194.8252	209.7008	224.8196	239.9254	254.7625	269.5835
-18.2897	-18.2995	-18.3093	-18.3483	-19.6773	-20.7628	-21.6172	-22.2196	-22.5661	-22.6688	-22.6681	-22.668	-22.6678	-22.6669	-22.5092	-22.1076	-21.4492	-20.539	-19.3986	-18.0147
27.5951	27.597	27.5989	27.6064	27.8519	28.032	28.1482	28.197	28.1791	28.0959	28.0928	28.092	28.0912	28.088	27.9351	27.717	27.4283	27.072	26.6559	26.1743

)E)

46	P7	C53	P8	C60	P9-S1	P9-GE1	P9	P9-GE2	P9-S2	C67	P10	C74	P11	C81	A2-S1	A2-GE1	A2
05.2500	0 + 420.0000	0 + 435.0000	0 + 450.0000	0 + 464.7500	0 + 479.5000	0 + 479.9000	0 + 480.0000	0 + 480.1000	0 + 480.5000	0 + 495.2500	0 + 510.0000	0 + 525.0000	0 + 540.0000	0 + 554.7500	0 + 569.5000	0 + 569.9000	0 + 570.0000
4.6373	209.349	224.3013	239.2407	253.9145	268.5667	268.9647	269.0641	269.1636	269.5615	284.1876	298.7861	313.5987	328.3736	342.9272	357.5037	357.8988	357.9976
2.5109	-12.1138	-11.4627	-10.5625	-9.4346	-8.0666	-8.026	-8.0159	-8.0057	-7.9649	-6.3406	-4.4767	-2.3362	0.051	2.5084	4.8614	4.9237	4.9392
7.6851	27.467	27.1783	26.822	26.4059	25.9245	25.9105	25.907	25.9035	25.8894	25.3384	24.7268	24.0545	23.3297	22.6133	21.887	21.867	21.862
4.6561	209.3842	224.3531	239.3092	253.9993	268.6684	269.0663	269.1658	269.2653	269.6632	284.3061	298.9209	313.75	328.5414	343.0902	357.6592	358.0543	358.1531
3.5107	-13.1132	-12.4613	-11.5601	-10.431	-9.0614	-9.0209	-9.0107	-9.0005	-8.9597	-7.3336	-5.4676	-3.3246	-0.9348	1.5218	3.8736	3.9358	3.9514
7.8101	27.592	27.3032	26.947	26.5309	26.0495	26.0355	26.032	26.0285	26.0144	25.4634	24.8494	24.1664	23.4309	22.7039	21.972	21.952	21.947
4.6702	209.4106	224.392	239.3605	254.0629	268.7446	269.1426	269.2421	269.3415	269.7395	284.395	299.022	313.8635	328.6671	343.2124	357.7758	358.1709	358.2697
4.2606	-13.8627	-13.2103	-12.3084	-11.1783	-9.8075	-9.767	-9.7568	-9.7466	-9.7058	-8.0783	-6.2108	-4.066	-1.6742	0.7818	3.1327	3.195	3.2105
7.8289	27.6108	27.322	26.9657	26.5496	26.0682	26.0542	26.0507	26.0472	26.0332	25.4821	24.8664	24.1753	23.4317	22.6968	21.9608	21.9408	21.9358
4.6749	209.4193	224.405	239.3776	254.0841	268.7701	269.168	269.2675	269.367	269.7649	284.4246	299.0557	313.9013	328.7091	343.2532	357.8146	358.2098	358.3085
4.5106	-14.1125	-13.46	-12.5578	-11.4274	-10.0562	-10.0157	-10.0055	-9.9953	-9.9545	-8.3265	-6.4585	-4.3131	-1.9207	0.5352	2.8858	2.948	2.9636
7.8351	27.617	27.3282	26.972	26.5559	26.0745	26.0605	26.057	26.0535	26.0395	25.4884	24.872	24.1782	23.432	22.6945	21.957	21.937	21.932
4.7313	209.5249	224.5605	239.583	254.3385	269.0751	269.473	269.5725	269.672	270.0699	284.7801	299.46	314.3551	329.2122	343.7422	358.281	358.6762	358.775
-17.51	-17.1107	-16.456	-15.5508	-14.4166	-13.0407	-13.0001	-12.99	-12.9798	-12.939	-11.3054	-9.4311	-7.2786	-4.8782	-2.4247	-0.0778	-0.0155	0
27.9101	27.692	27.4032	27.047	26.6309	26.1494	26.1355	26.132	26.1285	26.1145	25.5634	24.9397	24.2138	23.4354	22.6663	21.912	21.892	21.887
94.7923	209.6392	224.7289	239.8055	254.6141	269.4055	269.8035	269.9029	270.0024	270.4003	285.1653	299.898	314.8467	329.7573	344.2719	358.7863	359.1815	359.2802
20.7595	-20.3587	-19.7016	-18.7931	-17.6549	-16.2738	-16.2333	-16.2231	-16.2129	-16.1721	-14.5325	-12.6515	-10.4912	-8.0821	-5.6312	-3.2882	-3.226	-3.2104
27.9914	27.7733	27.4845	27.1282	26.7121	26.2306	26.2167	26.2132	26.2098	26.1958	25.6446	25.0131	24.2524	23.4392	22.6358	21.8633	21.8433	21.8383
94.8064	209.6656	224.7678	239.8569	254.6777	269.4818	269.8797	269.9792	270.0787	270.4766	285.2542	299.9991	314.9601	329.8831	344.3942	358.9029	359.2981	359.3968
21.5093	-21.1082	-20.4506	-19.5414	-18.4022	-17.0199	-16.9794	-16.9692	-16.9591	-16.9183	-15.2772	-13.3946	-11.2326	-8.8215	-6.3712	-4.0291	-3.9669	-3.9513
28.0101	27.792	27.5032	27.147	26.7309	26.2493	26.2355	26.232	26.2285	26.2146	25.6634	25.03	24.2613	23.44	22.6288	21.8521	21.832	21.827
94.8252	209.7008	224.8196	239.9254	254.7625	269.5835	269.9814	270.0809	270.1804	270.5783	285.3727	300.1338	315.1114	330.0508	344.5572	359.0584	359.4535	359.5523
22.5092	-22.1076	-21.4492	-20.539	-19.3986	-18.0147	-17.9742	-17.964	-17.9539	-17.9131	-16.2701	-14.3855	-12.2211	-9.8074	-7.3578	-5.017	-4.9547	-4.9392
27.9351	27.717	27.4283	27.072	26.6559	26.1743	26.1605	26.157	26.1535	26.1396	25.5884	24.9526	24.1732	23.3412	22.5194	21.7371	21.717	21.712

C81	A2-S1	A2-GE1	A2
554.7500	0 + 569.5000	0 + 569.9000	0 + 570.0000
342.9272	357.5037	357.8988	357.9976
2.5084	4.8614	4.9237	4.9392
22.6133	21.887	21.867	21.862
343.0902	357.6592	358.0543	358.1531
1.5218	3.8736	3.9358	3.9514
22.7039	21.972	21.952	21.947
343.2124	357.7758	358.1709	358.2697
0.7818	3.1327	3.195	3.2105
22.6968	21.9608	21.9408	21.9358
343.2532	357.8146	358.2098	358.3085
0.5352	2.8858	2.948	2.9636
22.6945	21.957	21.937	21.932
343.7422	358.281	358.6762	358.775
-2.4247	-0.0778	-0.0155	0
22.6663	21.912	21.892	21.887
344.2719	358.7863	359.1815	359.2802
-5.6312	-3.2882	-3.226	-3.2104
22.6358	21.8633	21.8433	21.8383
344.3942	358.9029	359.2981	359.3968
-6.3712	-4.0291	-3.9669	-3.9513
22.6288	21.8521	21.832	21.827
344.5572	359.0584	359.4535	359.5523
-7.3578	-5.017	-4.9547	-4.9392
22.5194	21.7371	21.717	21.712

	JAPAN INTERNATIONAL COOPERATION AGENCY (JICA)	CLIENT : MINISTRY OF COMMUNICATIONS, DIRECTORATE GENERAL OF ROADS
		PROJECT: D/D ON ROAD DEVELOPMENT PROJECT ON BATINAH HIGHWAY
	JICA STUDY TEAM PACIFIC CONSULTANTS INTERNATIONAL FUKUYAMA CONSULTANTS INTERNATIONAL	TITLE CO-ORDINATE LIST RA/18 AT B-LINE
		DATE / DWGNO. B-6

RA/18 AQR

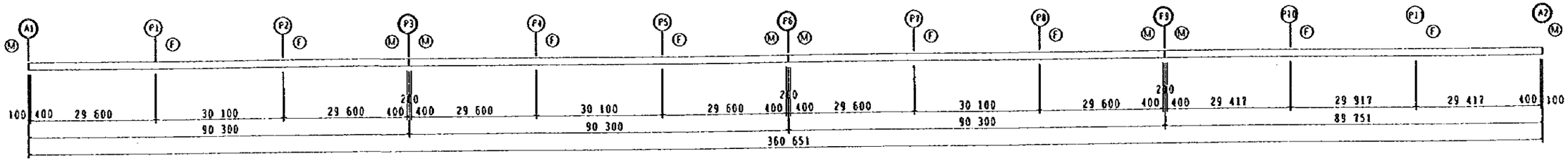

PROFILE OF BRIDGE S= 1/1000
(AT CENTER OF STRUCTURE)

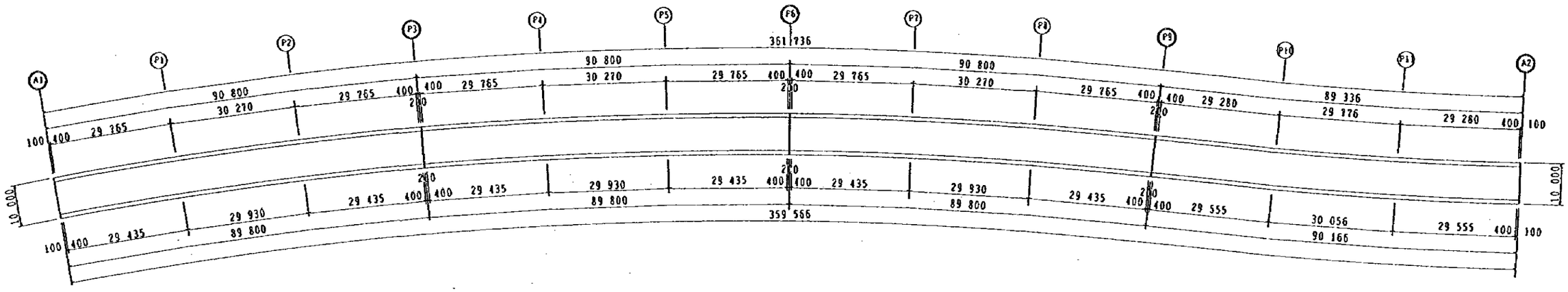

PLAN S= 1/1000

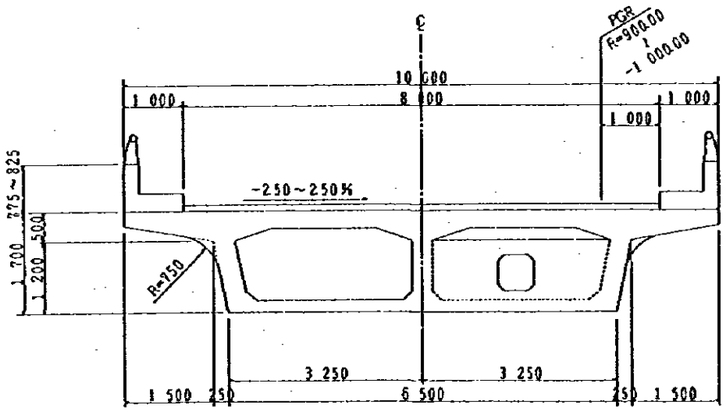

TYPICAL SECTION MID SPAN

S= 1/100

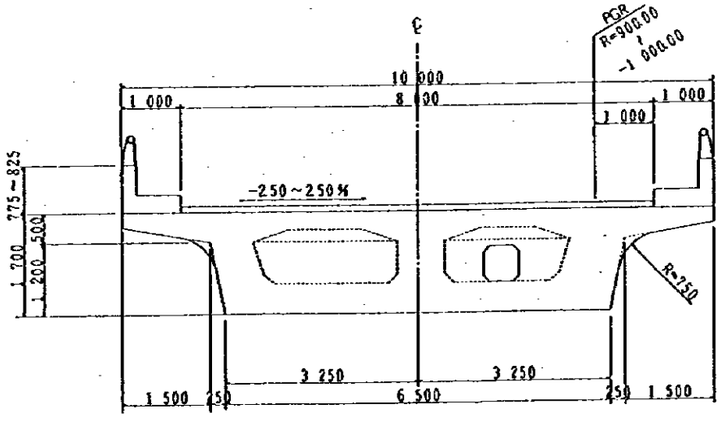

END SUPPORT INTERIOR SUPPORT

S= 1/100

GENERAL VIEW OF BRIDGE AT A-LINE

NOTES:		JAPAN INTERNATIONAL COOPERATION AGENCY (JICA)	CLIENT: MINISTRY OF COMMUNICATIONS, DIRECTORATE GENERAL OF ROADS
			PROJECT: D/D ON ROAD DEVELOPMENT PROJECT ON BATINAH HIGHWAY
		JICA STUDY TEAM PACIFIC CONSULTANTS INTERNATIONAL FUKUYAMA CONSULTANTS INTERNATIONAL	TITLE GENERAL VIEW OF BRIDGE AT A-LINE
			DATE DWG NO. B-7

RA/18 AQR

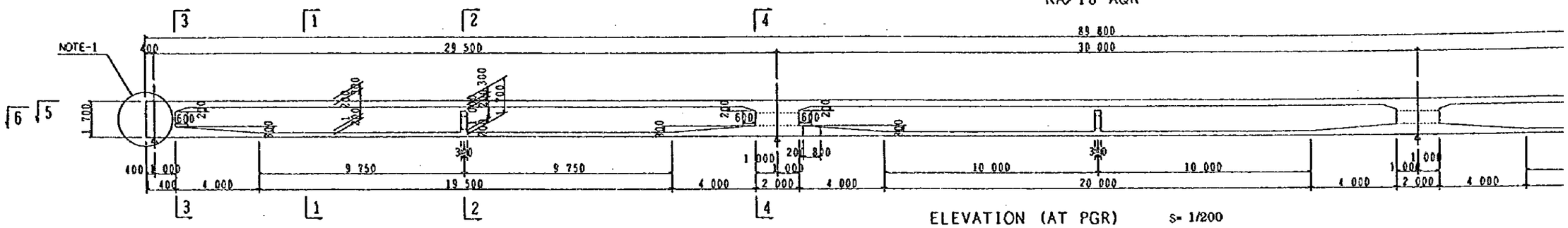

ELEVATION (AT PGR) S= 1/200

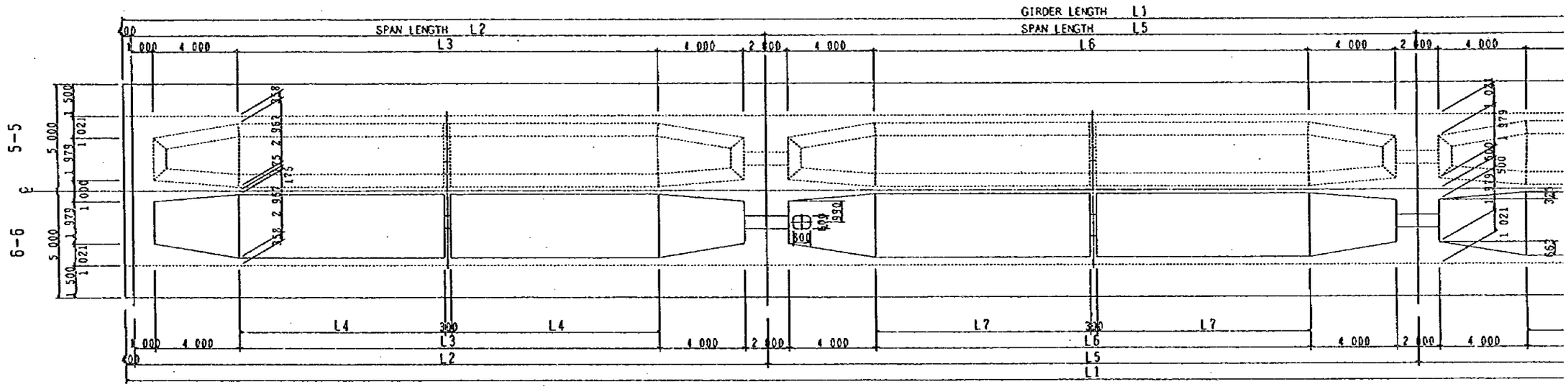

PLAN S= 1/200 .

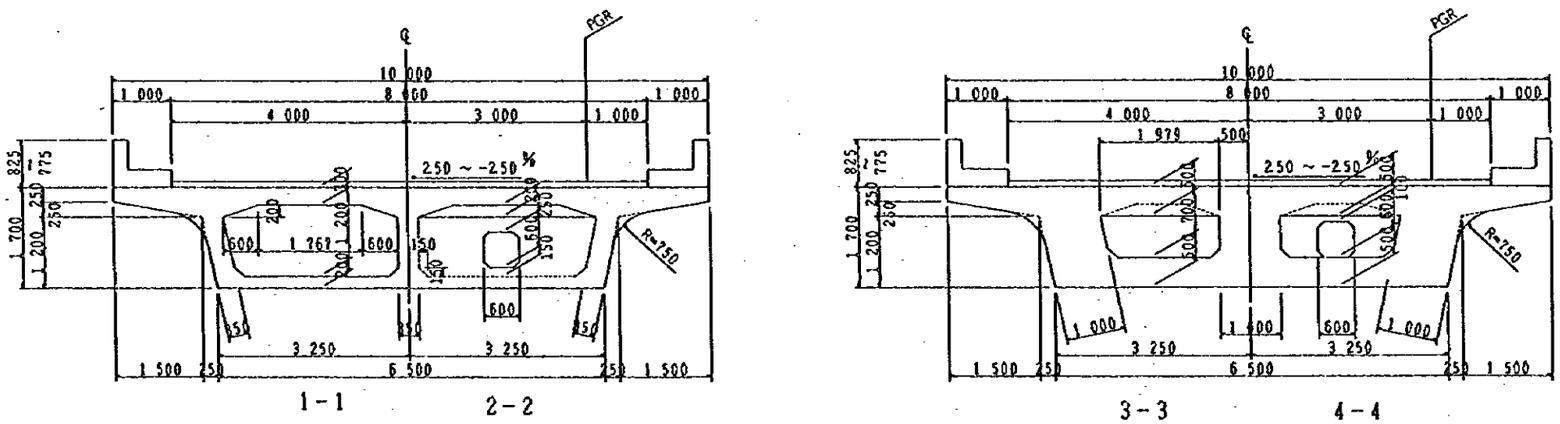

SECTION S= 1/100

		L1	L2
(A1) ~ (P3)	Ⓛ	90 600	29 765
	Ⓒ	90 100	29 600
	Ⓡ	89 600	29 435
(P3) ~ (P6)	Ⓛ	90 600	29 765
	Ⓒ	90 100	29 600
	Ⓡ	89 600	29 435
(P6) ~ (P9)	Ⓛ	90 600	29 765
	Ⓒ	90 100	29 600
	Ⓡ	89 600	29 435
(P9) ~ (A2)	Ⓛ	89 136	29 280
	Ⓒ	89 551	29 417
	Ⓡ	89 966	29 555

STRUCTURAL DETAIL OF GIRDER AT A-LINE

NOTES:

JAPAN INTERNATIC

JICA
PACIFIC CONSU
FUKUYAMA CON

RA/18 AQR

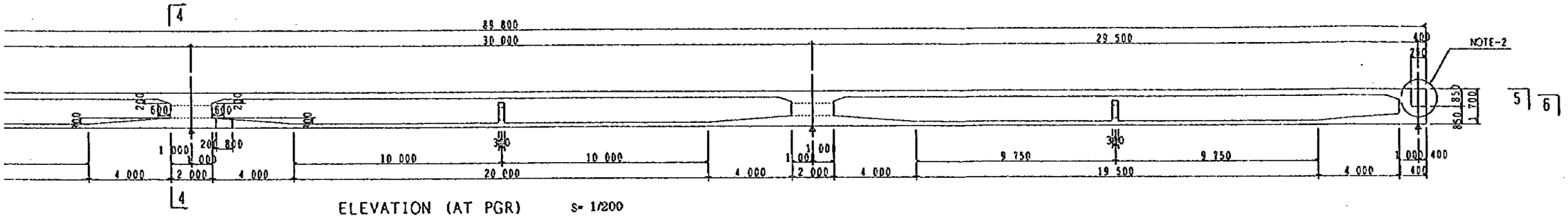

ELEVATION (AT PGR) S= 1/200

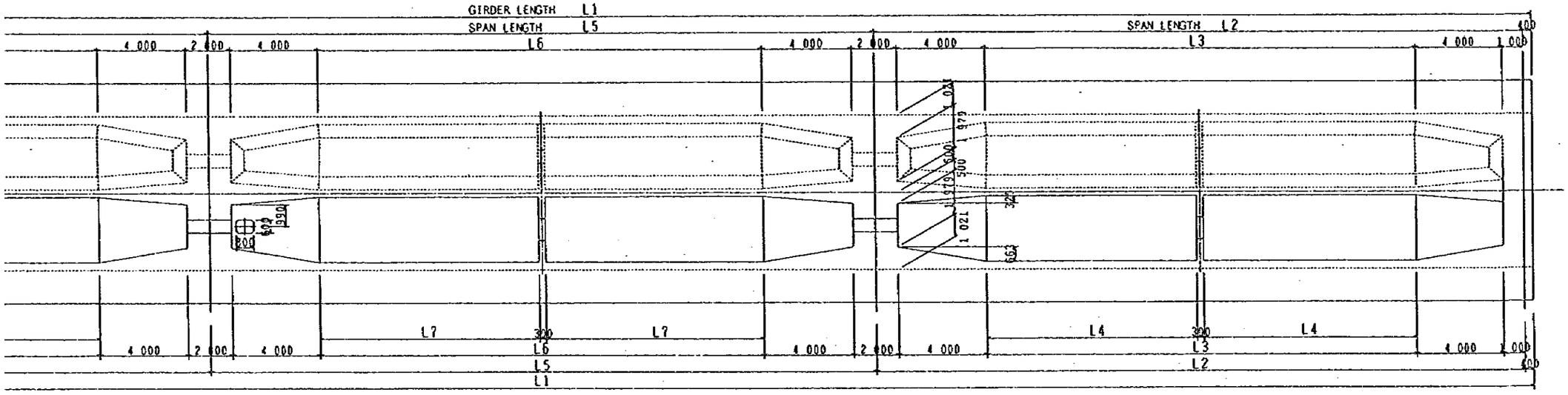

PLAN S= 1/200 .

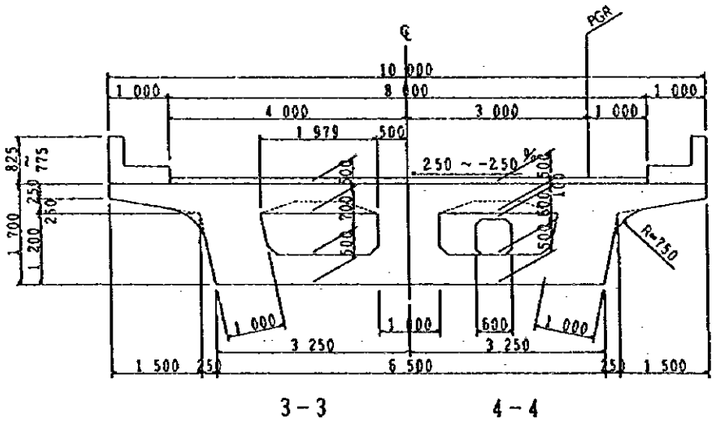

SECTION S= 1/100

NOTE-1 GIRDER END SHALL BE MADE VERTICALLY.
NOTE-2 RESESS FOR ANCHORAGE.
POUR CONCRATE AFTER TENSIONING EXCEPT AT ABATMENT.
NOTE-3 ONLY PLAN DISTANCE IS CONSIDERED.

		L1	L2	L3	L4	L5	L6	L7	R	REMARKS
A1 ~ P3	L	90 600	29 765	19 765	9 732.5	30 270	20 270	9 985.0	+908.00	
	℄	90 100	29 600	19 600	9 650.0	30 100	20 100	9 900.0	+903.00	
	R	89 600	29 435	19 435	9 567.5	29 930	19 930	9 815.0	+898.00	
P3 ~ P6	L	90 600	29 765	19 765	9 732.5	30 270	20 270	9 985.0	+908.00	
	℄	90 100	29 600	19 600	9 650.0	30 100	20 100	9 900.0	+903.00	
	R	89 600	29 435	19 435	9 567.5	29 930	19 930	9 815.0	+898.00	
P6 ~ P9	L	90 600	29 765	19 765	9 732.5	30 270	20 270	9 985.0	+908.00	
	℄	90 100	29 600	19 600	9 650.0	30 100	20 100	9 900.0	+903.00	
	R	89 600	29 435	19 435	9 567.5	29 930	19 930	9 815.0	+898.00	
P9 ~ A2	L	89 136	29 280	19 280	9 490.0	29 776	19 776	9 738.0	-992.00	
	℄	89 551	29 417	19 417	9 558.5	29 917	19 917	9 882.5	-997.00	
	R	89 966	29 555	19 555	9 627.5	30 056	20 056	9 878.0	-1002.0	

DIMENSION LIST

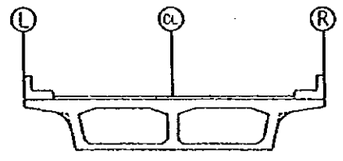

STRUCTURAL DETAIL OF GIRDER AT A-LINE

JAPAN INTERNATIONAL COOPERATION AGENCY (JICA)	CLIENT: MINISTRY OF COMMUNICATIONS, DIRECTORATE GENERAL OF ROADS
	PROJECT: D/D ON ROAD DEVELOPMENT PROJECT ON BATINAH HIGHWAY
JICA STUDY TEAM PACIFIC CONSULTANTS INTERNATIONAL FUKUYAMA CONSULTANTS INTERNATIONAL	TITLE: STRACTURAL DETAIL OF GIRDER AT A-LINE
	DATE / DWGNO. B-8

RA/18 AQR

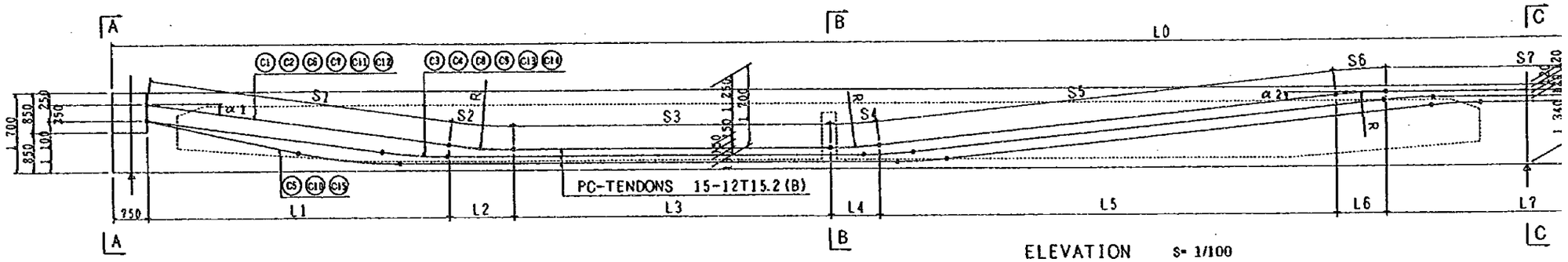

ELEVATION S= 1/100

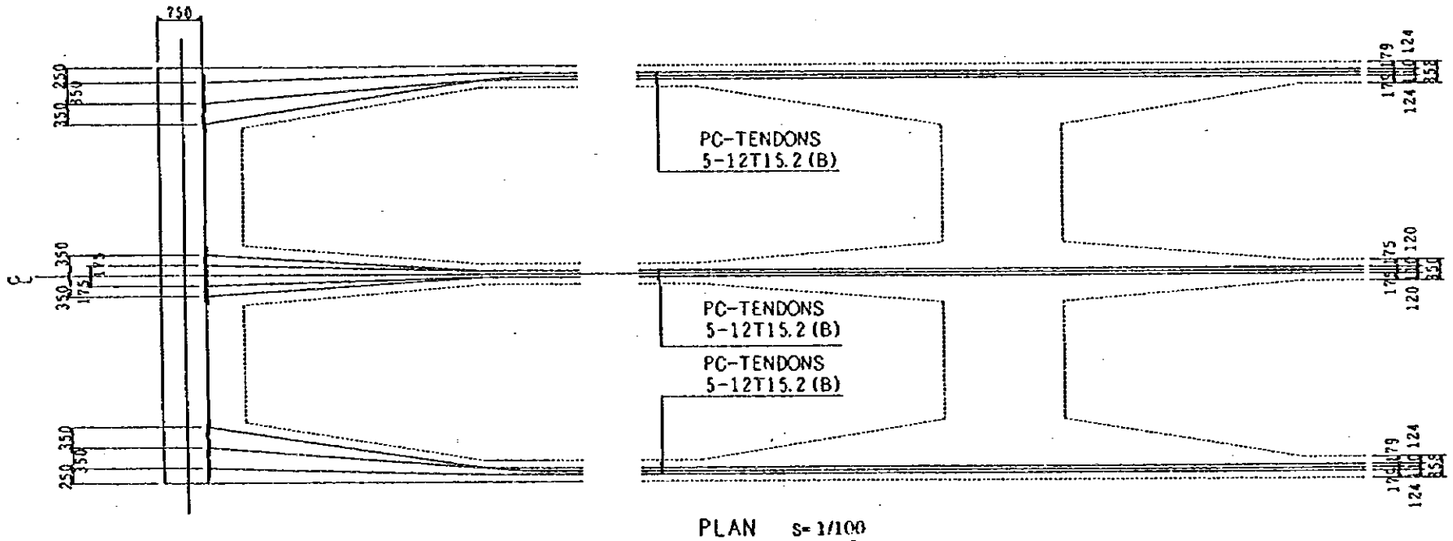

PLAN S= 1/100

	(A1)~(P3) C1 C2 C3 C4 C5 S1 S2	(P3)~(P6) C1 C2 C3 C4 C5 S1 S2	(P6)~(P9) C6 C7 C8 S1 S2	(P9)~ C1 C2 C3 C4 C5 S1 S2	(P9)~ C3 C4 C5 S1 S2
R	10 000	10 000	10 000	10 000	10
α 1	8.000	8.000	12.500	8.000	
2	6.000	6.000	6.000	6.000	
3	8.000	8.000	8.000	8.000	
S 1	6 486	5 049	3 294	6 486	5
2	1 396	1 396	2 182	1 396	1
3	6 660	8 798	10 524	6 477	8
4	1 047	1 047	1 047	1 047	1
5	9 762	10 049	10 336	9 762	10
6	1 047	1 047	1 047	1 047	1
7	5 777	3 777	1 777	5 777	3
8	1 396	1 396	1 396	1 396	1
9	6 721	6 936	7 152	6 721	6
10	1 396	1 396	1 396	1 396	1
11	2 810	3 596	4 383	2 718	3
Σ S	44 498	44 487	44 536	44 224	44
2Σ S	88 996	88 974	89 068	88 448	88
w	1 176	1 176	1 177	1 169	
n	6	6	3	6	
W	7 056	7 056	3 531	7 014	

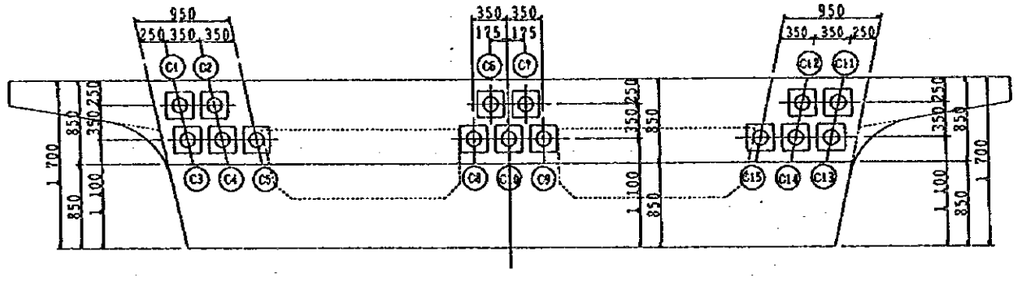

END ELEVATION A-A

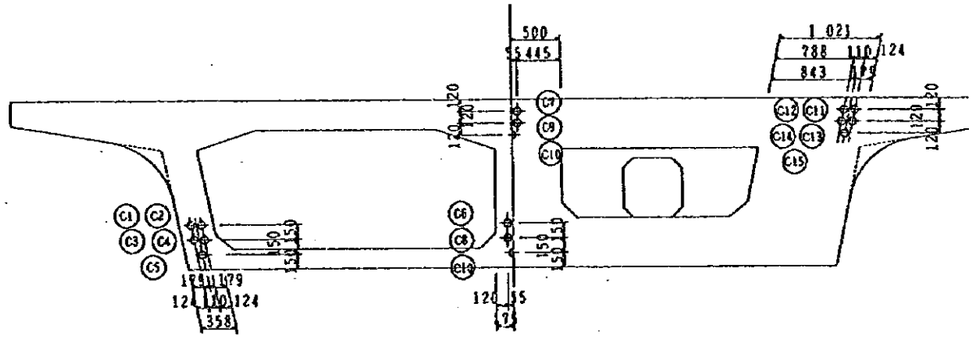

SEC.B-B AT MID SPAN SEC.C-C AT SUPPORT

DETAIL OF TENDONS AT A-LINE

NOTES:

JAPAN INTERNATION.
JICA S
PACIFIC CONSUL
FUKUYAMA CONSU

18-A

RA/18 AQR

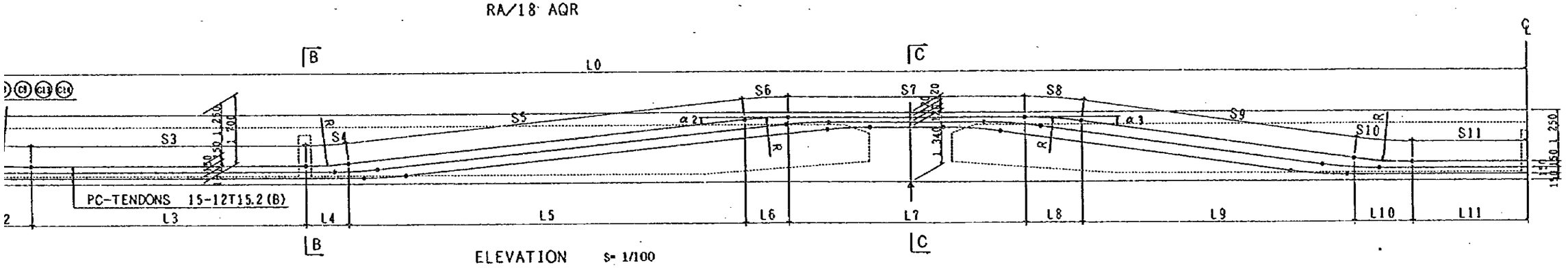

ELEVATION s= 1/100

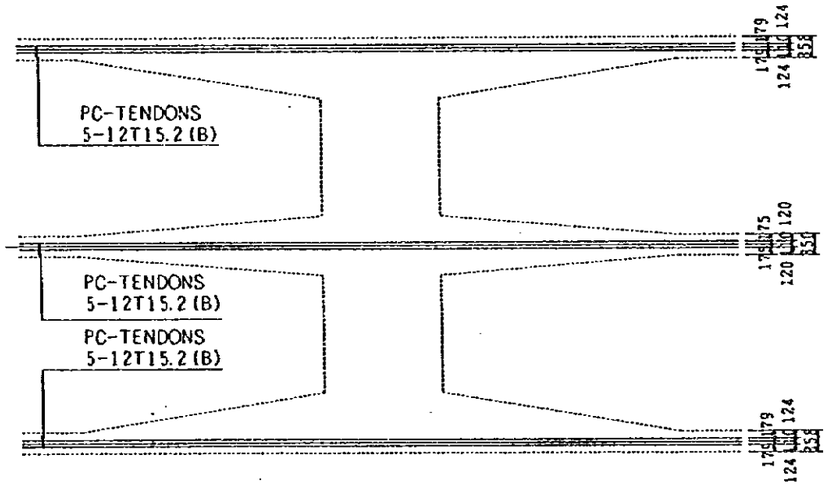

PLAN s= 1/100

	(A1)~(P3)	(P3)~(P6)	(P6)~(P8)	(P8)~(A2)			REMARKS
	C1 C2 C6 C7 C11 C12	C3 C4 C8 C9 C13 C14	C5 C10 C15	C1 C2 C6 C7 C11 C12	C3 C4 C8 C9 C13 C14	C5 C10 C15	
R	10 000	10 000	10 000	10 000	10 000	10 000	
α 1	8.000	8.000	12.500	8.000	8.000	12.500	
2	6.000	6.000	6.000	6.000	6.000	6.000	
3	8.000	8.000	8.000	8.000	8.000	8.000	
S 1	6 486	5 049	3 294	6 486	5 049	3 294	
2	1 396	1 396	2 182	1 396	1 396	2 182	
3	6 660	8 798	10 524	6 477	8 615	10 341	
4	1 047	1 047	1 047	1 047	1 047	1 047	
5	9 762	10 049	10 336	9 762	10 049	10 336	
6	1 047	1 047	1 047	1 047	1 047	1 047	
7	5 777	3 777	1 777	5 777	3 777	1 777	
8	1 396	1 396	1 396	1 396	1 396	1 396	
9	6 721	6 936	7 152	6 721	6 936	7 152	
10	1 396	1 396	1 396	1 396	1 396	1 396	
11	2 810	3 596	4 383	2 718	3 504	4 291	
Σ S	44 498	44 487	44 534	44 224	44 212	44 260	
2Σ S	88 996	88 974	89 068	88 448	88 424	88 520	13.212 kg/m
w	1 176	1 176	1 177	1 169	1 168	1 170	
n	6	6	3	6	6	3	PER GIRDER
W	7 056	7 056	3 531	7 014	7 008	3 510	PER GIRDER

	(A1)~(P3)	(P3)~(P6)	(P6)~(P9)	(P9)~(A2)			REMARKS
	C1 C2 C6 C7 C11 C12	C3 C4 C8 C9 C13 C14	C5 C10 C15	C1 C2 C6 C7 C11 C12	C3 C4 C8 C9 C13 C14	C5 C10 C15	
L 0	90 100			89 551			
1	6 423	5 000	3 216	6 423	5 000	3 216	
2	1 392	1 392	2 164	1 352	1 392	2 164	
3	6 660	8 798	10 524	6 477	8 615	10 341	
4	1 045	1 045	1 045	1 045	1 045	1 045	
5	9 709	9 994	10 280	9 709	9 994	10 280	
6	1 045	1 045	1 045	1 045	1 045	1 045	
7	5 777	3 777	1 777	5 777	3 777	1 777	
8	1 392	1 392	1 392	1 352	1 392	1 392	
9	6 655	6 869	7 082	6 655	6 869	7 082	
10	1 392	1 392	1 392	1 352	1 392	1 392	
11	2 810	3 596	4 383	2 718	3 504	4 291	

NOTE : (1).PLAN DISTANCE IS TAKEN FROM THE CENTER OF STRUCTURE.

(2).LENGTH DEVIATION OF EACH ACTUALTENDON FROM THE TYPICAL LENGTH AT CENTER OF STRUCTURE DUE TO HOLIZONTAL CURVATURE OF BRIDGE SHALL BE ADJUSTED AT L2 AND L11.

(3).α IS TAKEN AGAINST TOP SURFACE OF GIRDER.

(4).EXTRA LENGTH OF TENDONS FOR TENSIONING OPERATION IS NOT INCLUDED.

DIMENSION LIST

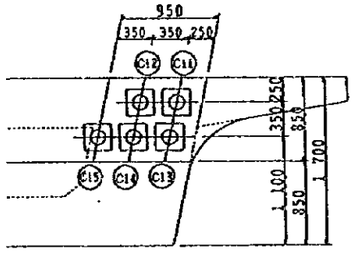

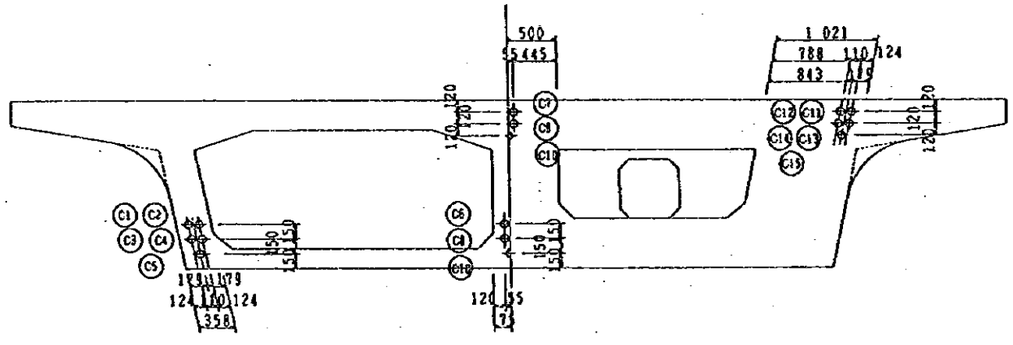

SEC.B-B AT MID SPAN SEC.C-C AT SUPPORT

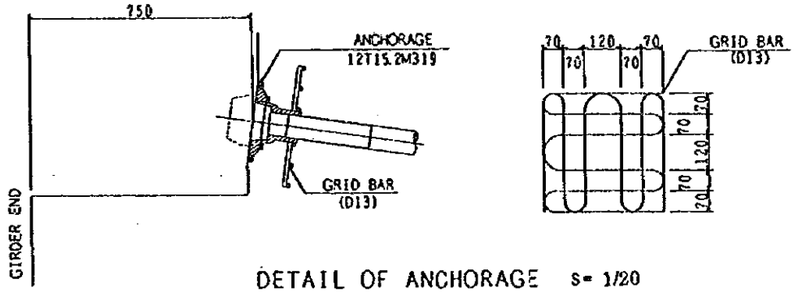

DETAIL OF ANCHORAGE s= 1/20

DETAIL OF TENDONS AT A-LINE

JAPAN INTERNATIONAL COOPERATION AGENCY (JICA)	CLIENT : MINISTRY OF COMMUNICATIONS, DIRECTORATE GENERAL OF ROADS
JICA STUDY TEAM PACIFIC CONSULTANTS INTERNATIONAL FUKUYAMA CONSULTANTS INTERNATIONAL	PROJECT: D/D ON ROAD DEVELOPMENT PROJECT ON BATINAH HIGHWAY
	TITLE DETAIL OF TENDONS AT A-LINE
	DATE DWGNO. B-9

RA/18 AQR

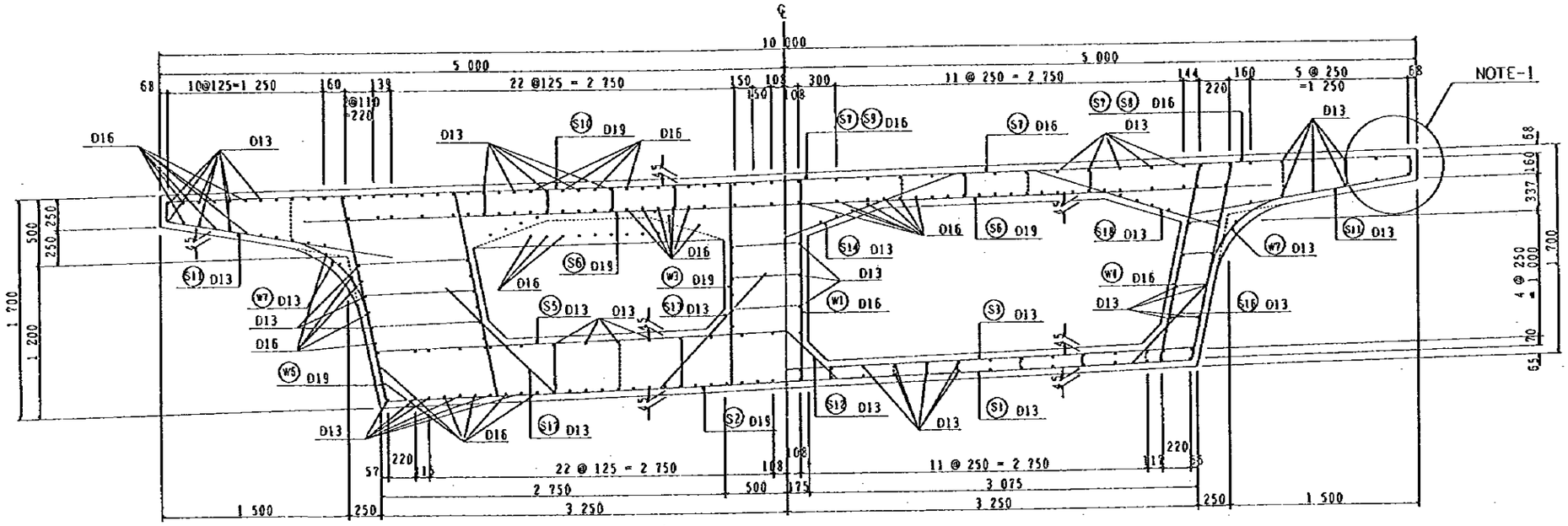

AT INTERIOR SUPPORT

AT MID SPAN

NOTE-1 : (1).REINFORCEMENT FOR WALL-RAILING SHALL BE ASSEMBLED TOGETHER WITH REINFORCEMENT FOR MAIN GIRDER BEFOR CASTING.

(2).SEE DRAWING RAILING AND CANTILEVER SLAB.

NOTE-2 : (1).FOR END SUPPORT, SEE DRAWING RE-BAR ARRANGEMENT-(2),(4),(6).

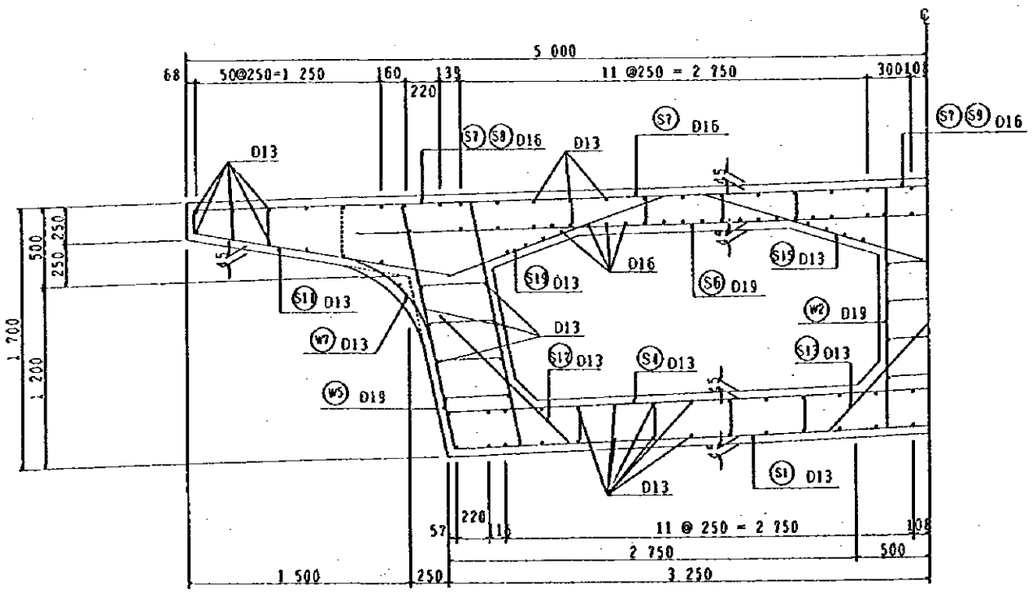

AT WEB WIDENED

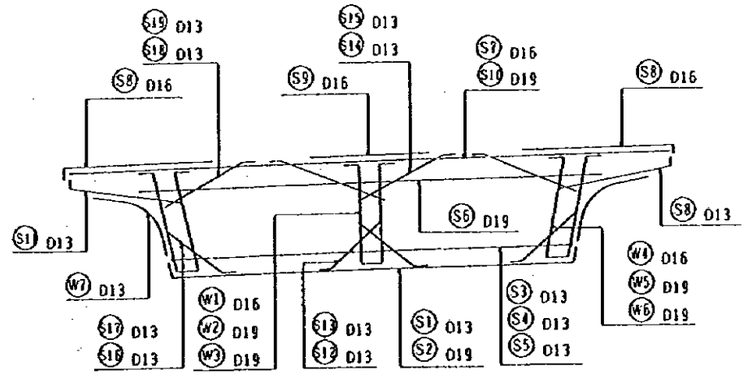

PROFILE OF MAIN-REINFORCEMENT

A-LINE : TYPICAL RE-BAR ARRANGEMENT-(1) S=1/40

NOTES:		JAPAN INTERNATIONAL COOPERATION AGENCY (JICA)	CLIENT: MINISTRY OF COMMUNICATIONS, DIRECTORATE GENERAL OF ROADS
			PROJECT: D/D ON ROAD DEVELOPMENT PROJECT ON BATINAH HIGHWAY
		JICA STUDY TEAM PACIFIC CONSULTANTS INTERNATIONAL FUKUYAMA CONSULTANTS INTERNATIONAL	TITLE: RE-BAR ARRANGEMENT(1/6) AT A-LINE
			DATE / DWGNO. B-10

RA/18 AQR

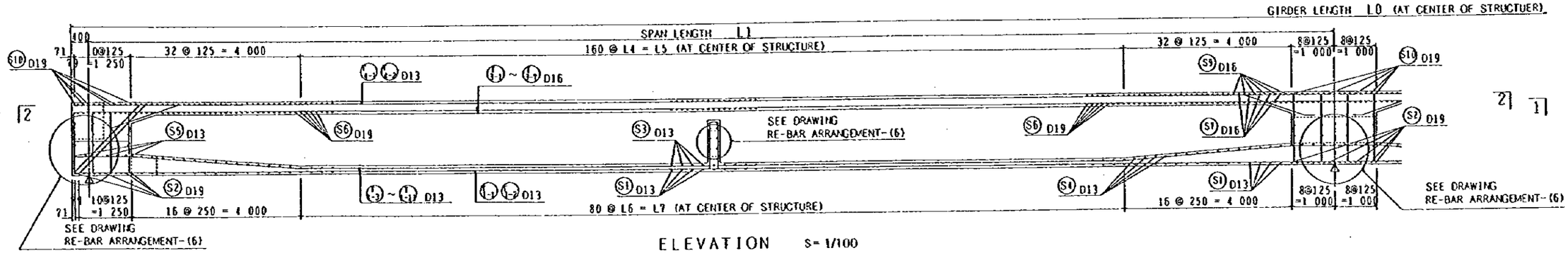

ELEVATION S=1/100

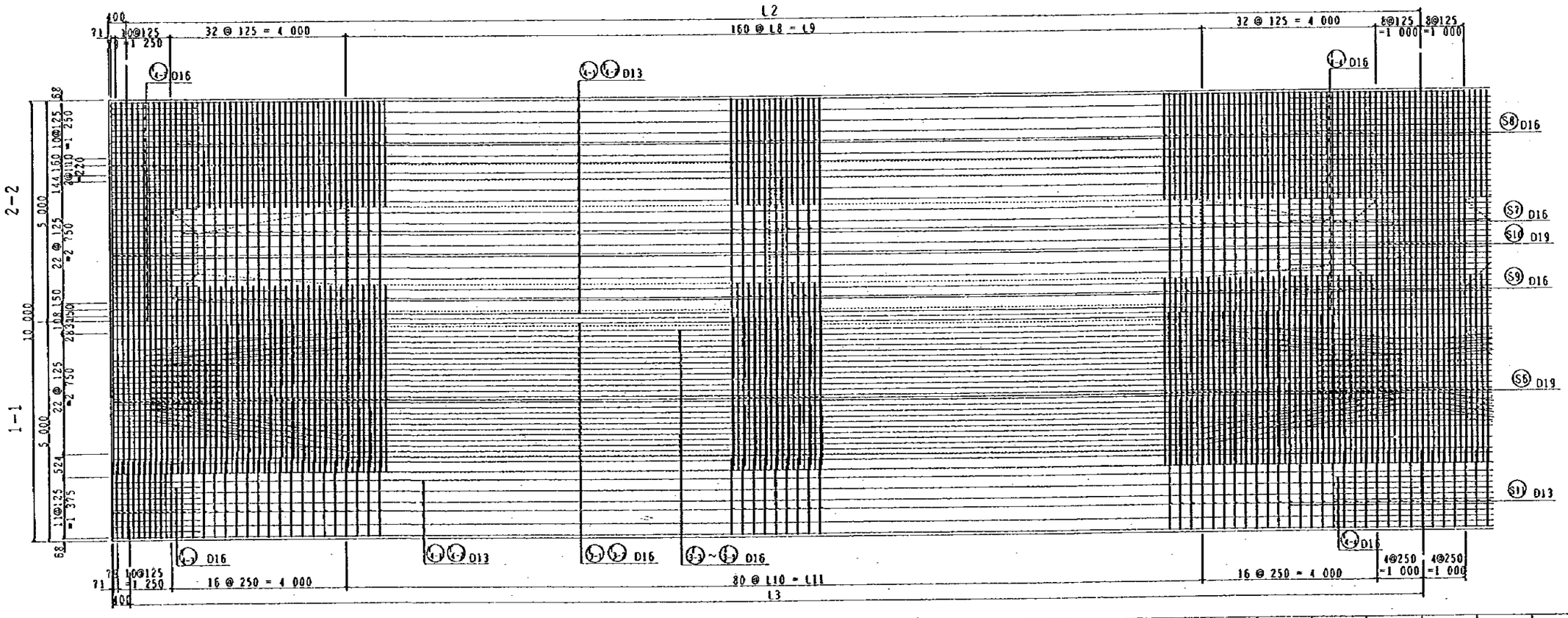

PLAN S=1/100

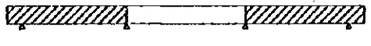

KEY PLAN

	L0	L1	L2	L3	L4	L5	L6	L7	L8	L9	L10	L11
A1 ~ P3	90 100	29 600	1225	19 600	245.0	19 600	29 765	1235	19 765	29 435	242.9	19 435
P3 ~ P6	90 100	29 600	1225	19 600	245.0	19 600	29 765	1235	19 765	29 435	242.9	19 435
P6 ~ P9	90 100	29 600	1225	19 600	245.0	19 600	29 765	1235	19 765	29 435	242.9	19 435
P9 ~ A2	89 551	29 417	121.4	19 417	242.7	19 600	29 280	120.5	19 280	29 555	244.4	19 555

DIMENSION LIST (FOR END SPAN)

A-LINE RE-BAR ARRANGEMENT-(2)

NOTES:

JAPAN INTERNATIONAL COOPERATION AGENCY
(JICA)
JICA STUDY TEAM
PACIFIC CONSULTANTS INTERNATIONAL
FUKUYAMA CONSULTANTS INTERNATIONAL

CLIENT: MINISTRY OF COMMUNICATIONS, DIRECTORATE GENERAL OF ROADS
PROJECT: D/D ON ROAD DEVELOPMENT PROJECT ON BATINAH HIGHWAY
TITLE RE-BAR ARRANGEMENT(2/6) AT A-LINE
DATE
DWG NO. B-11