APPENDIX A-9 BASIC DESIGN DRAWINGS

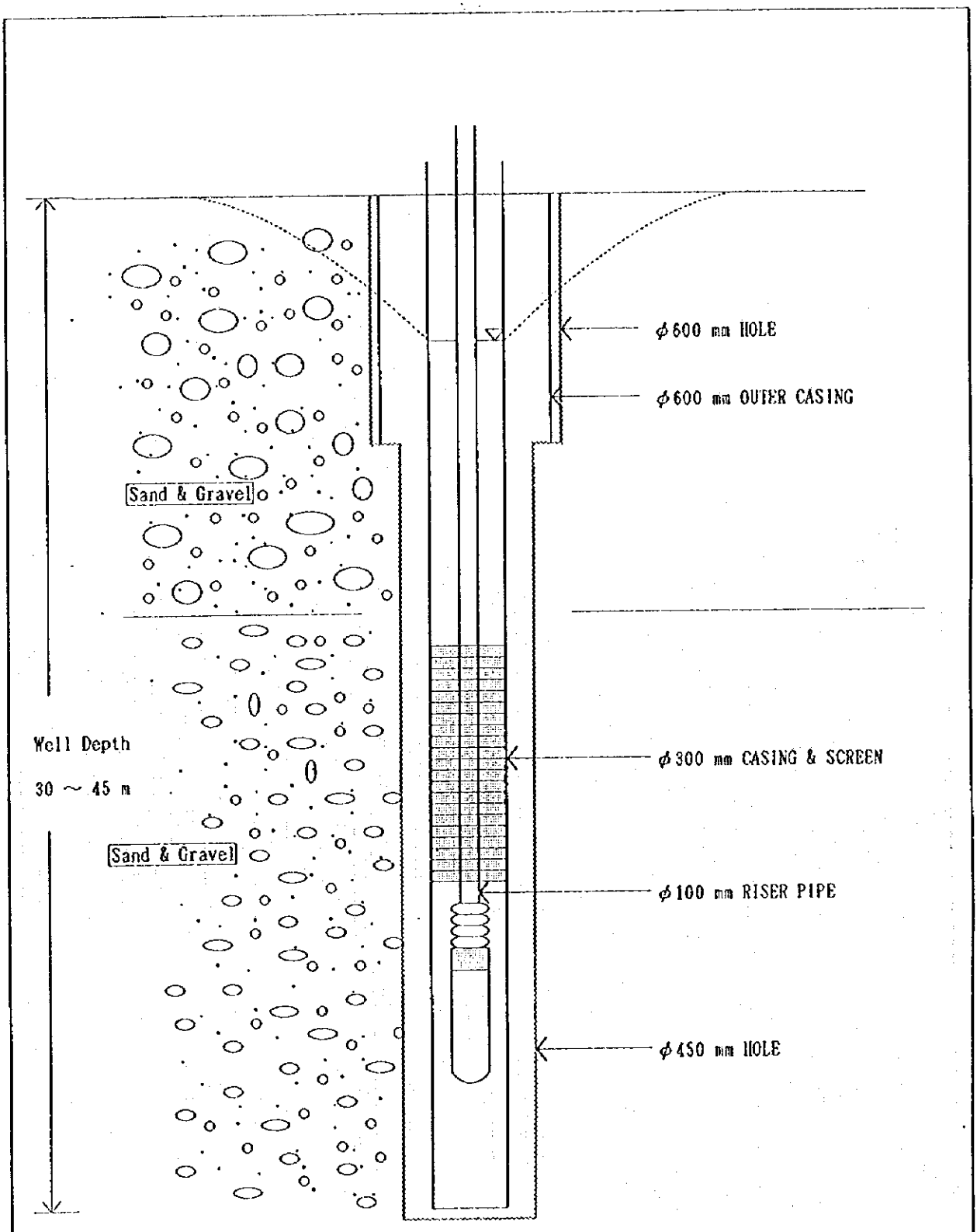

Fig. 1 Standard Well Design of Reconstruction Wells

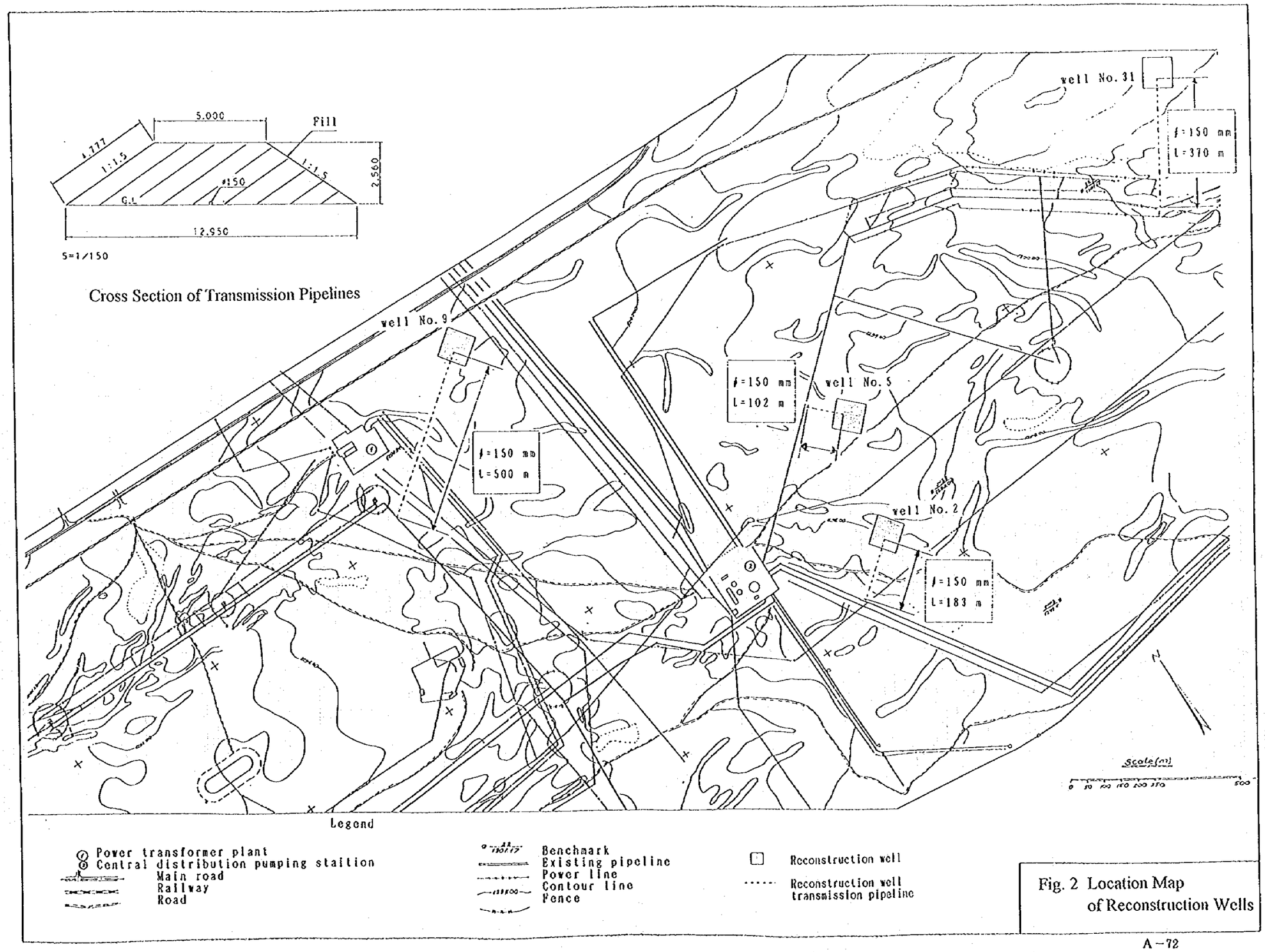

Fig. 2 Location Map of Reconstruction Wells

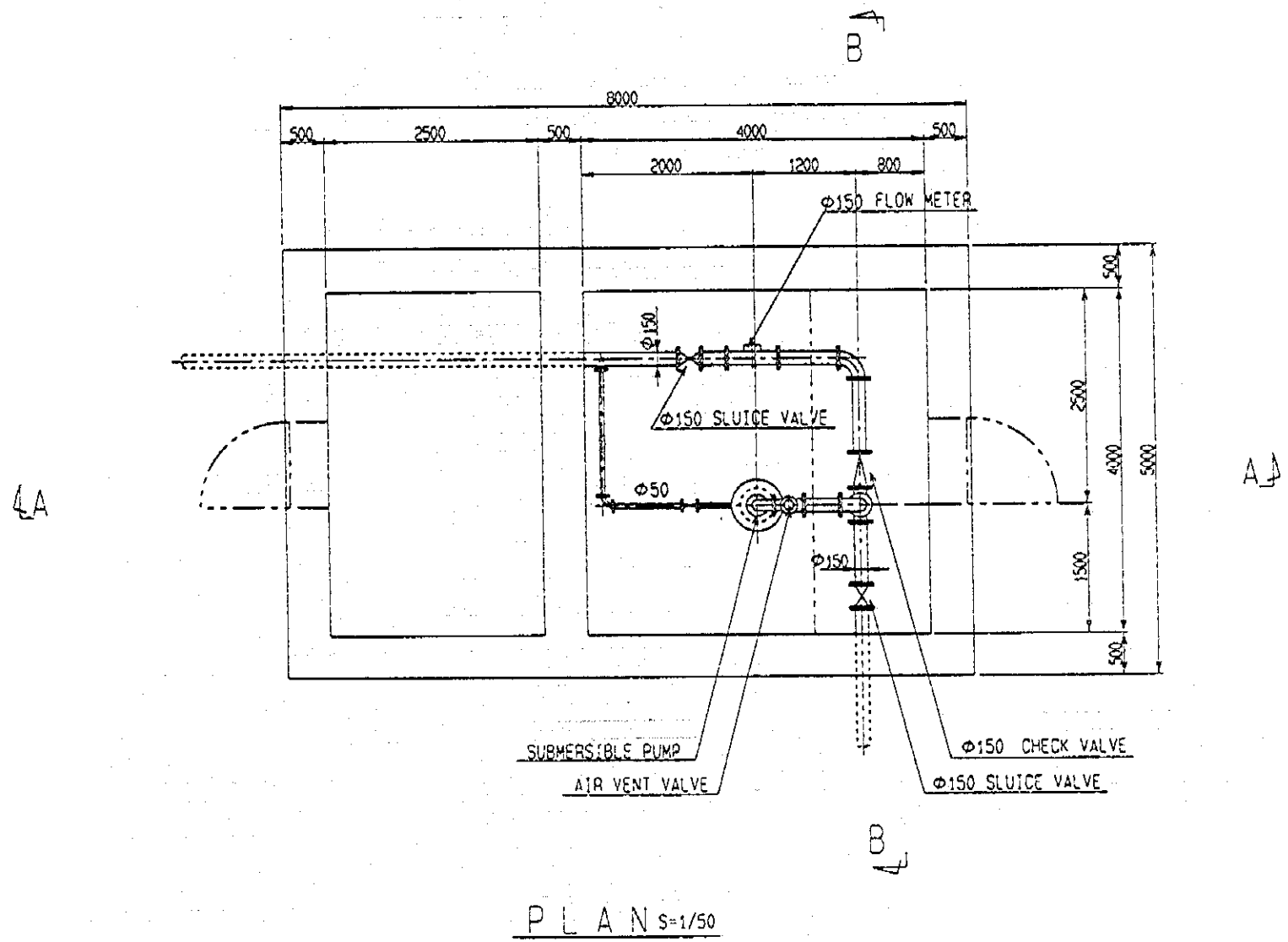

Fig. 3 Intake Pump House (Plan)

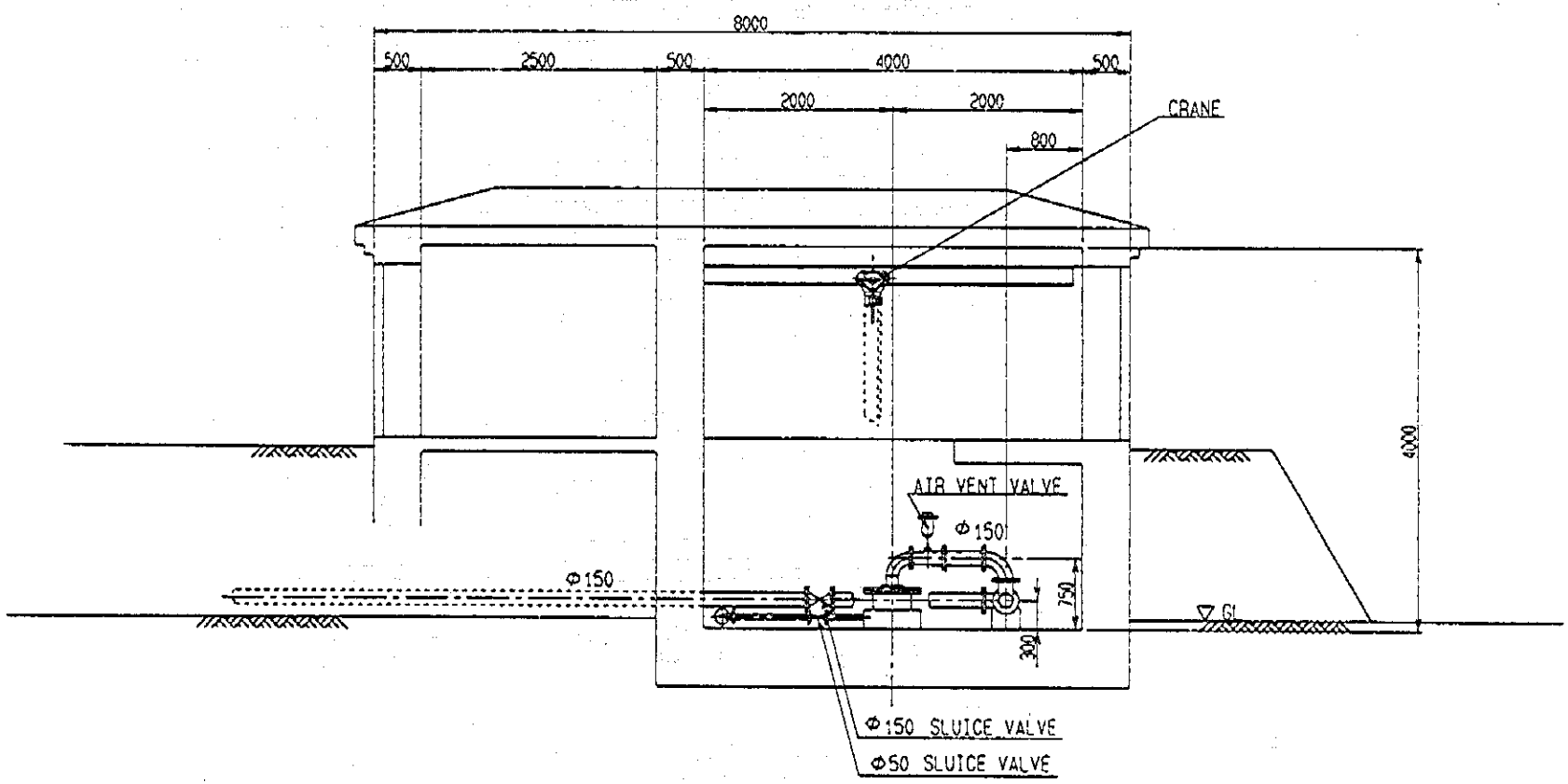

SECTION A – A S=1/50

Fig. 4 Intake Pump House (Section)

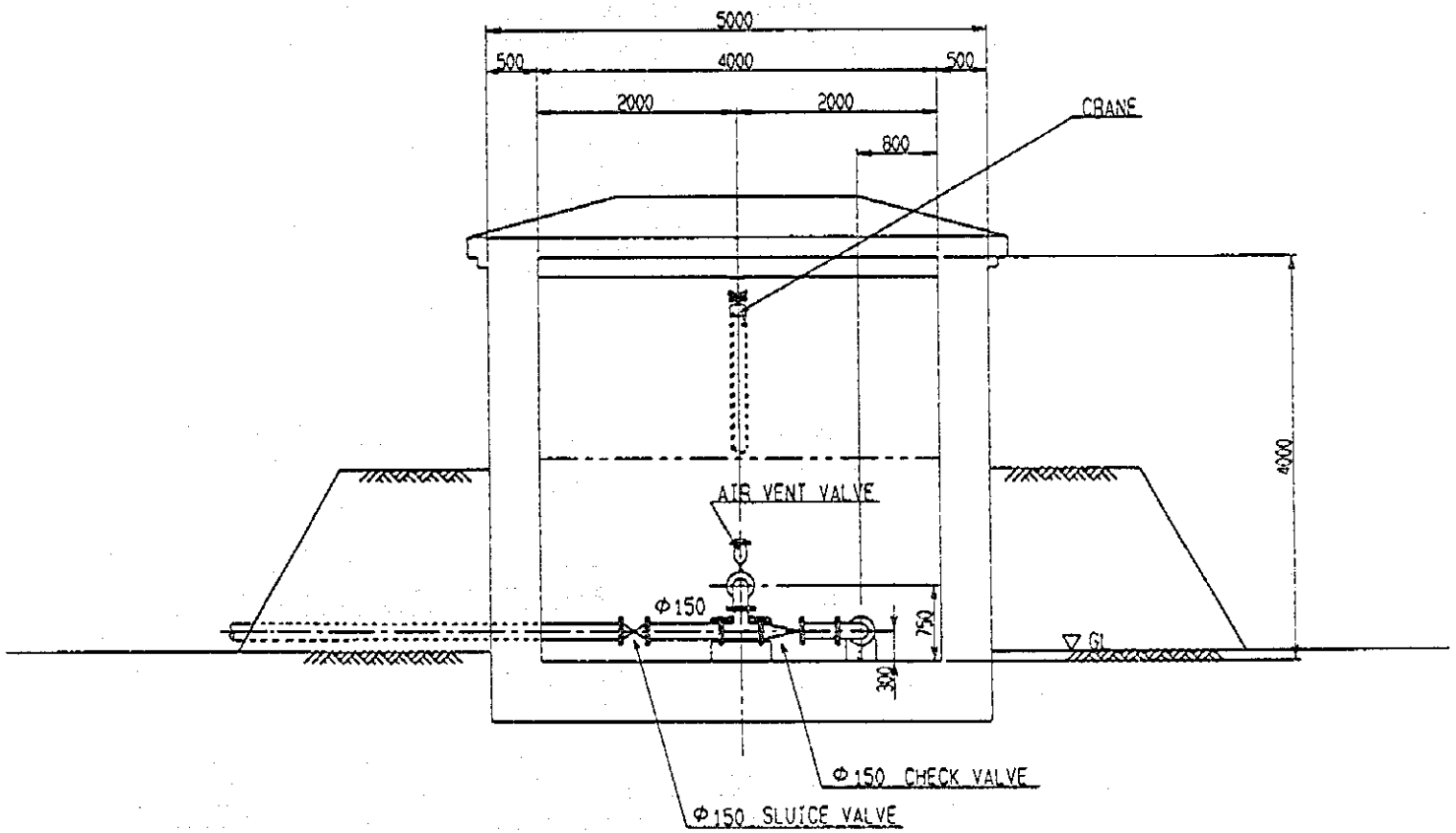

SECTION B — B S=1/50

Fig. 5 Intake Pump House (Section)

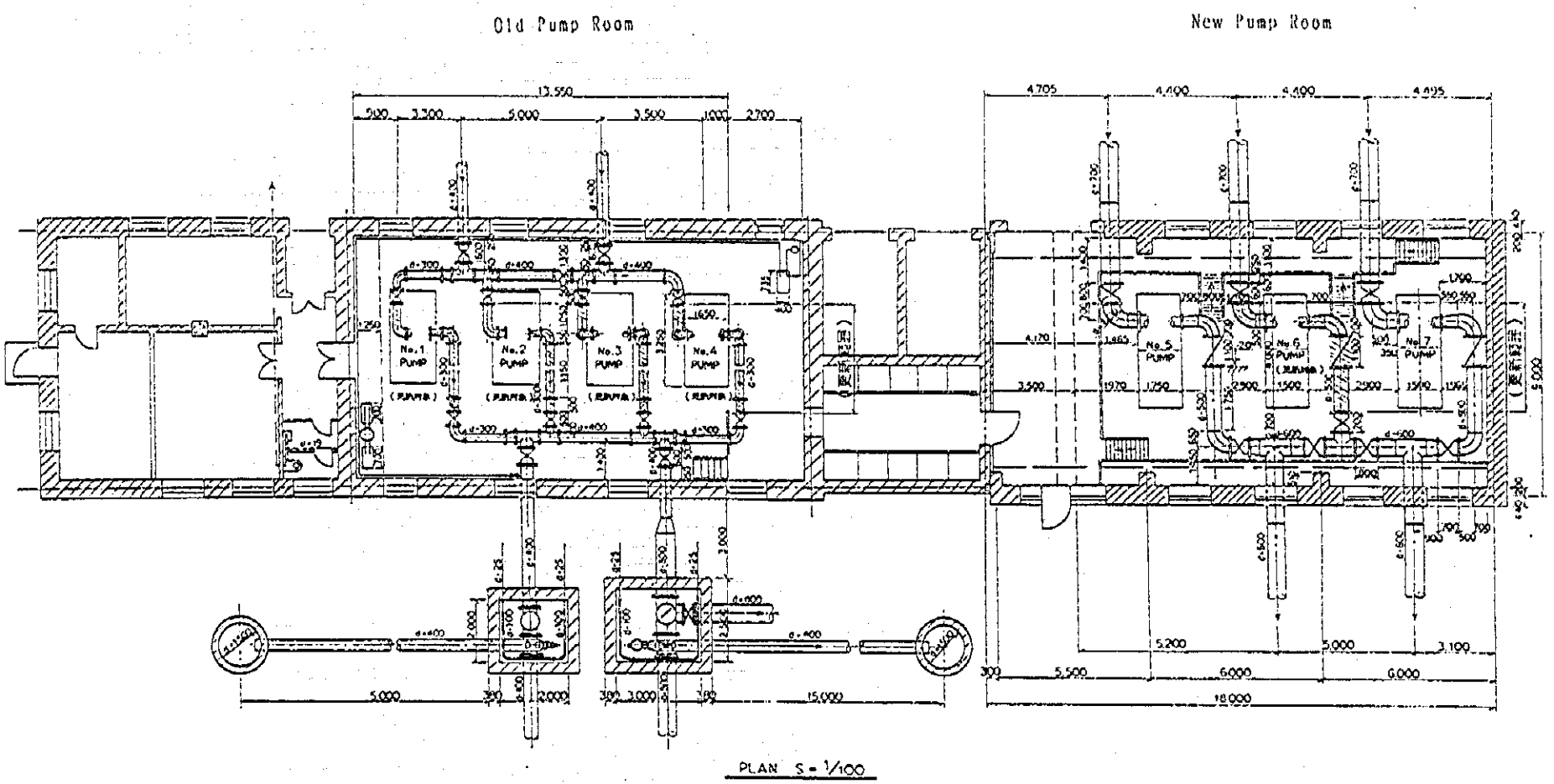

Renewal Distribution Pumps

No. 1, 2, 3, 4, 6

Fig. 6 Layout Map of Distribution Pumps in the Central Pumping Station

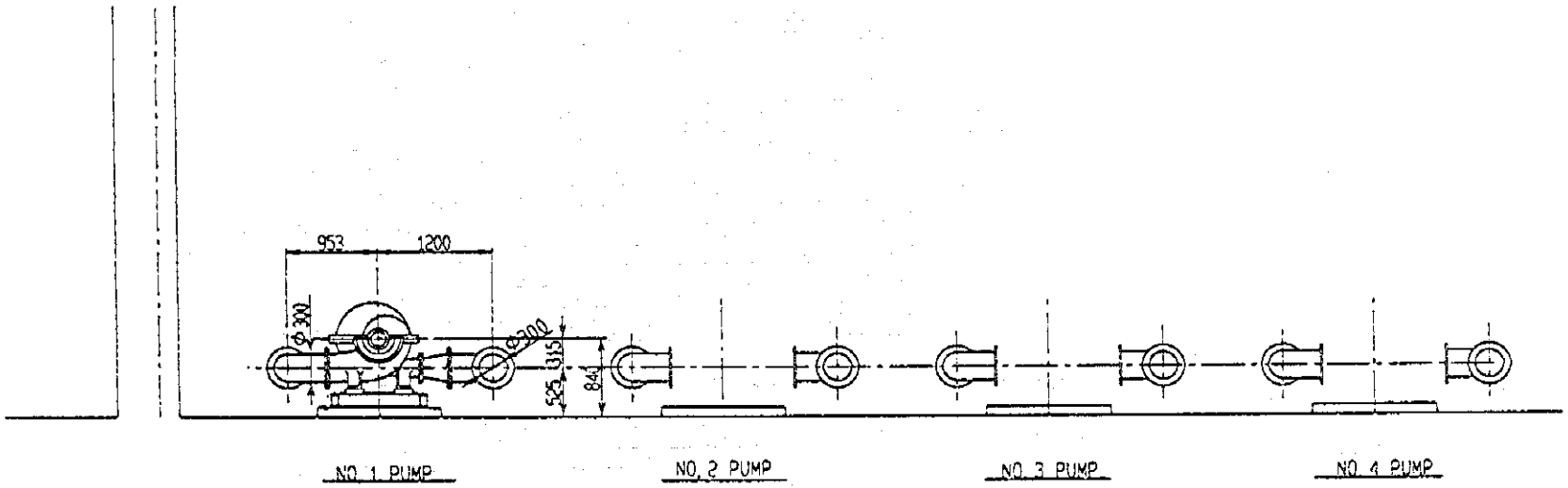

SECTIONAL VIEW S=1/50

Fig. 7 Sectional View for Installation of Renewal Distribution Pump in Old Building of the Central Pumping Station

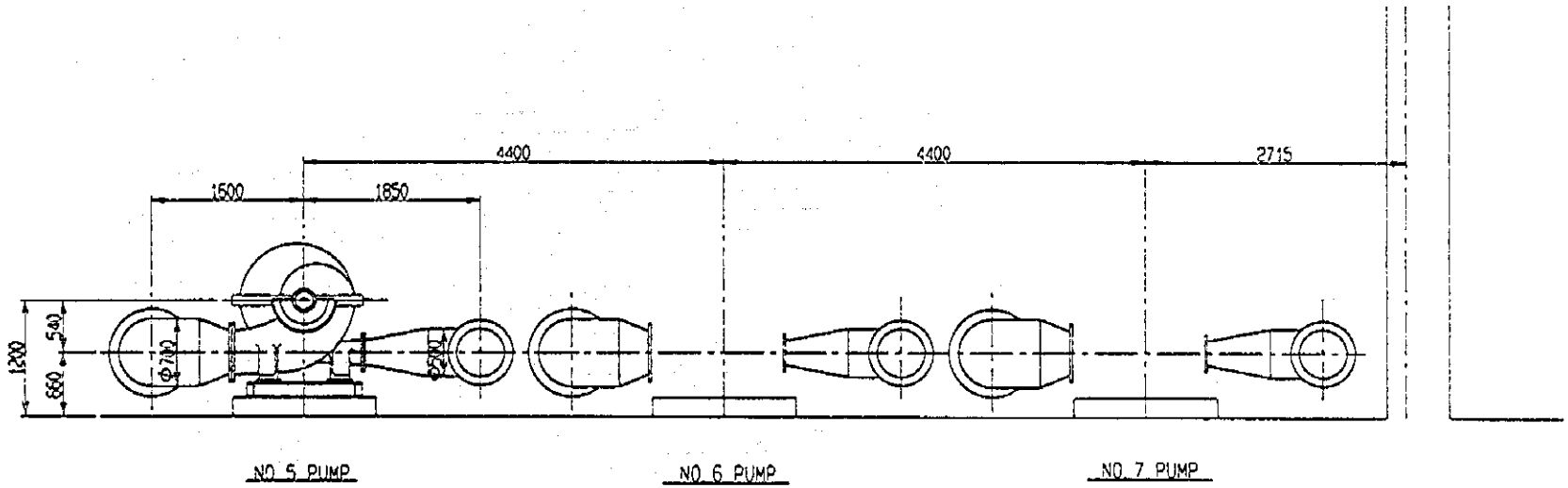

SECTIONAL VIEW S=1/50

Fig. 8 Sectional View for Installation of Renewal Distribution Pump in New Building of the Central Pumping Station

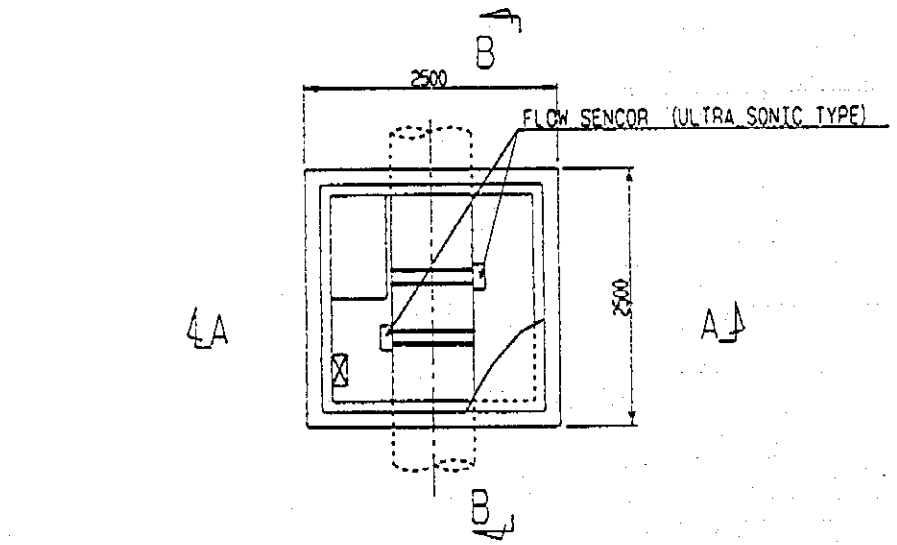

PLAN S=1/50

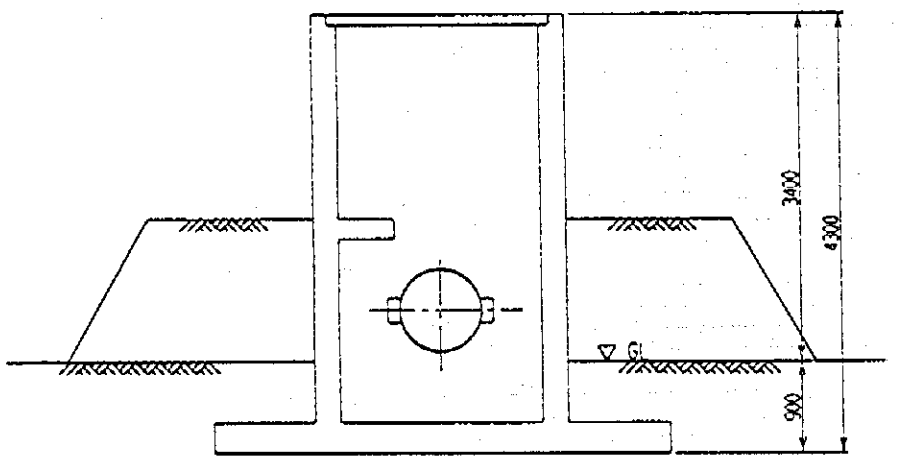

SECTION A — A S=1/50

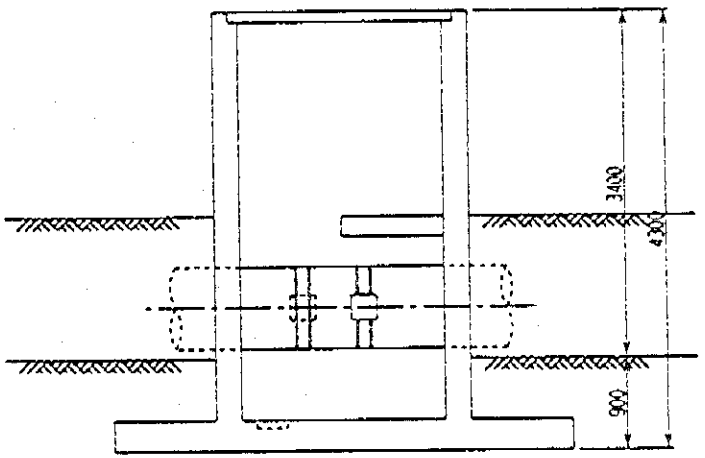

SECTION B — B S=1/50

Fig. 9 Typical Layout of Ultrasonci Type Flow Meter Pit

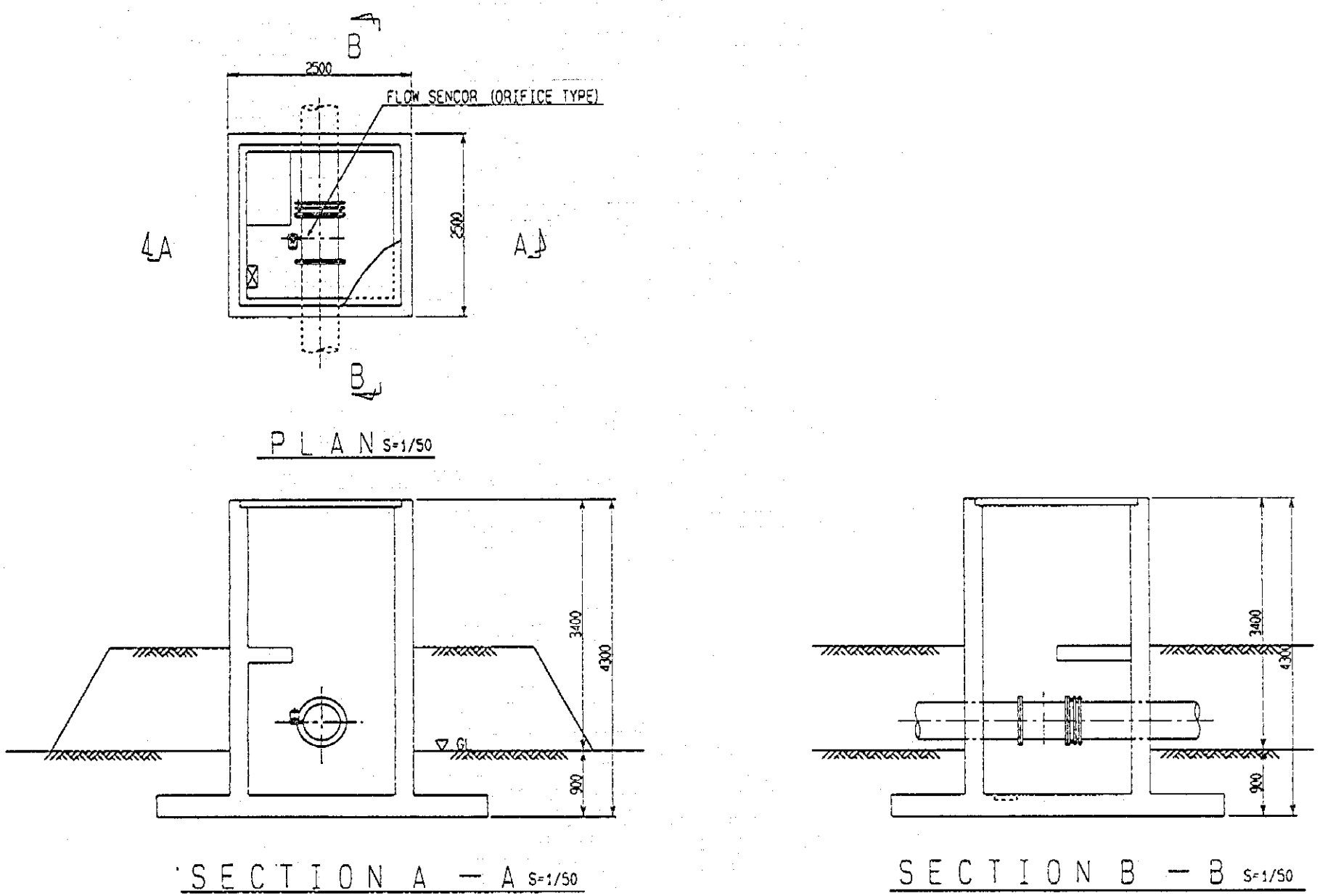

Fig. 10 Typical Layout of Orifice Type Flow Meter Pit

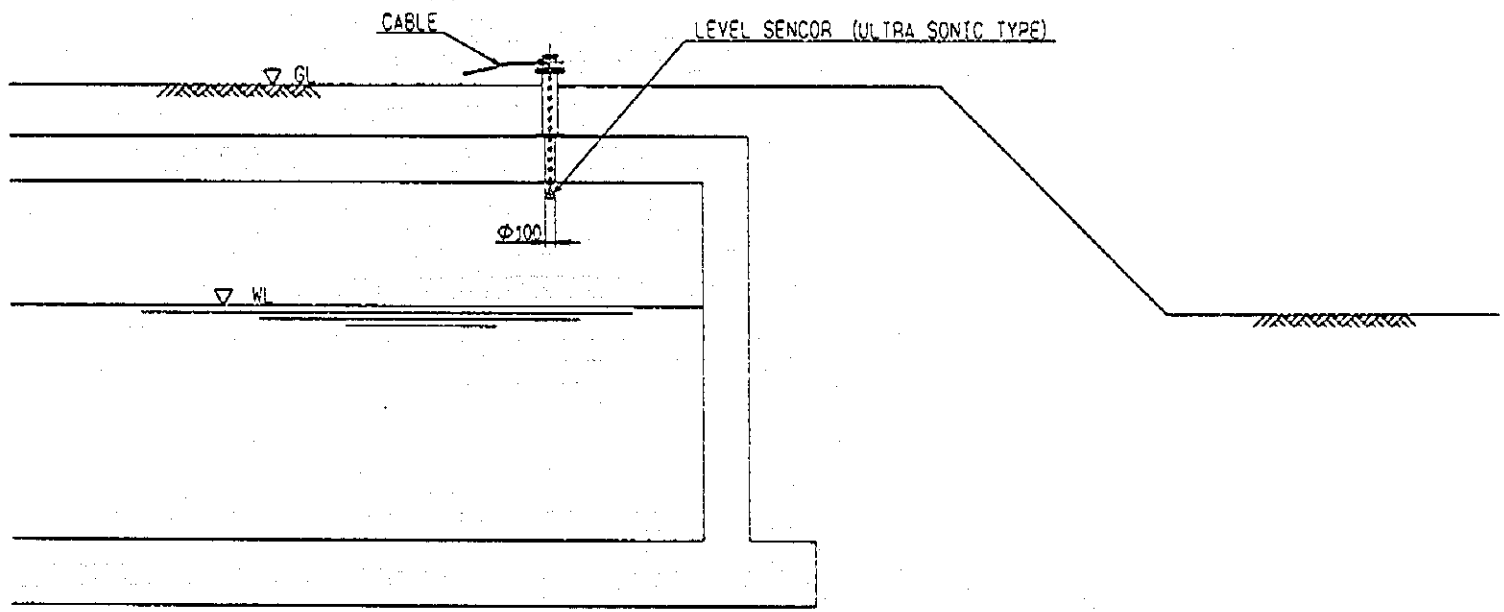

SECTIONAL VIEW S=1/50

Fig. 11 Typical Installation Layout of Ultrasonic Tvpe Water Level Meter

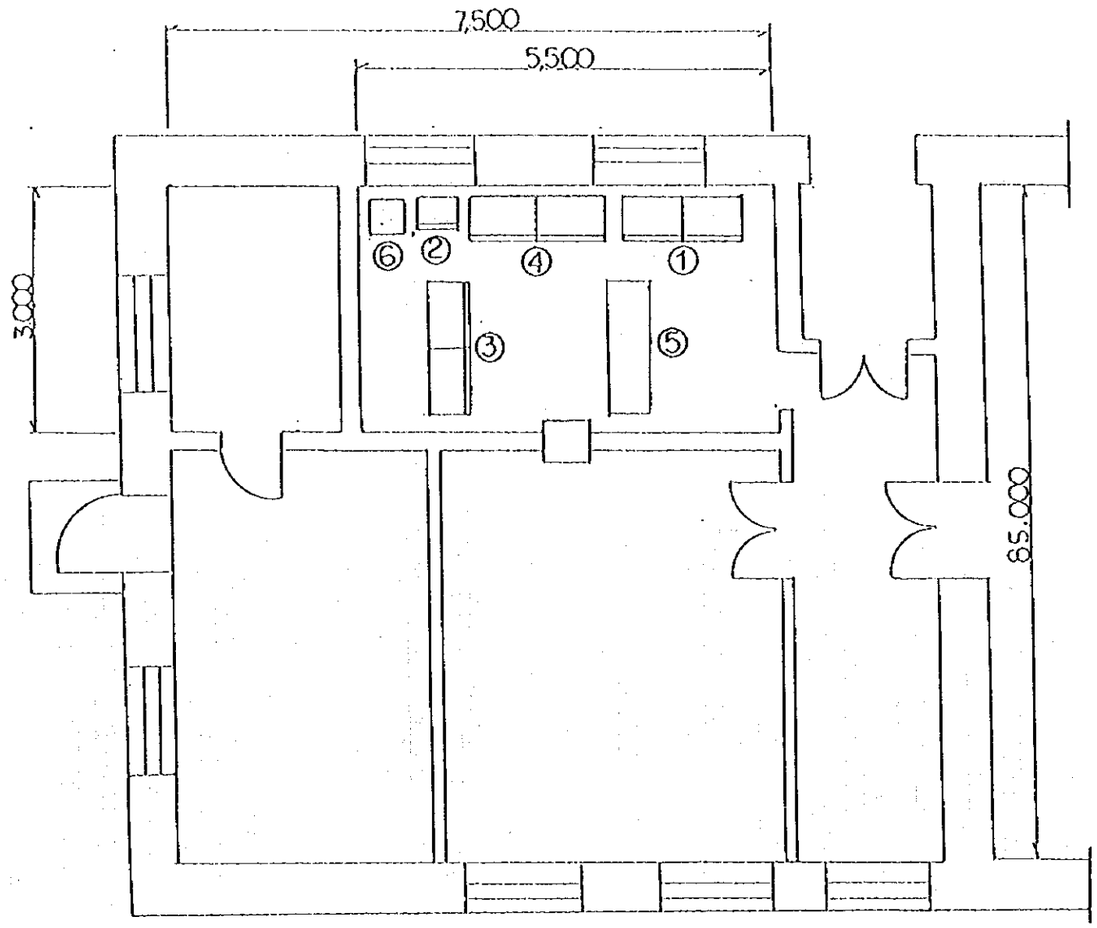

EXISTING DISTRIBUTION PUMP STATION

DESCRIPTION

① INSTRUMENTATION PANEL
② RELEY TERMINAL BOX
③ TM/TC SYSTEM FOR MASTER STATION
④ SIGNAL CONUERTER PANEL
⑤ REMOTE SUPERVISORY CONTROL PANEL
⑥ UNINTERPUPTIBLE POWER SUPPLY (UPS)

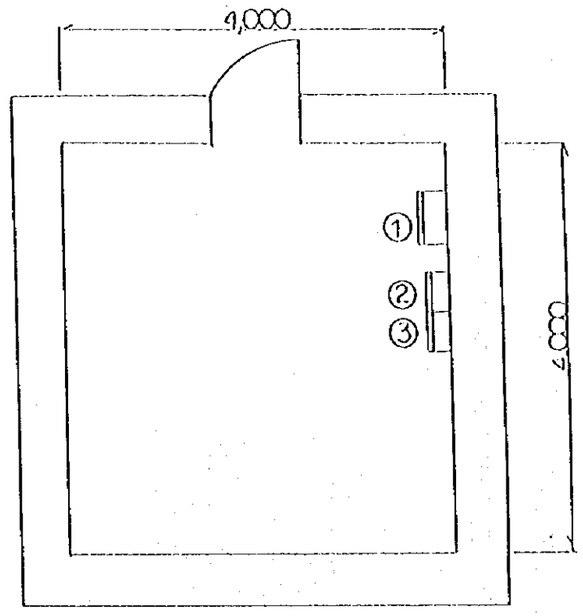

EXISTING INTAKE PUMP HOUSE

DESCRIPTION

① PUMP STARTER PANEL
② TM/TC SYSTEM FOR SLAVE STATION
③ RELEY TERMINAL BOX

Fig. 12
LAYOUT OF REMOTE SUPERVISORY CONTROL EQUIPMENT

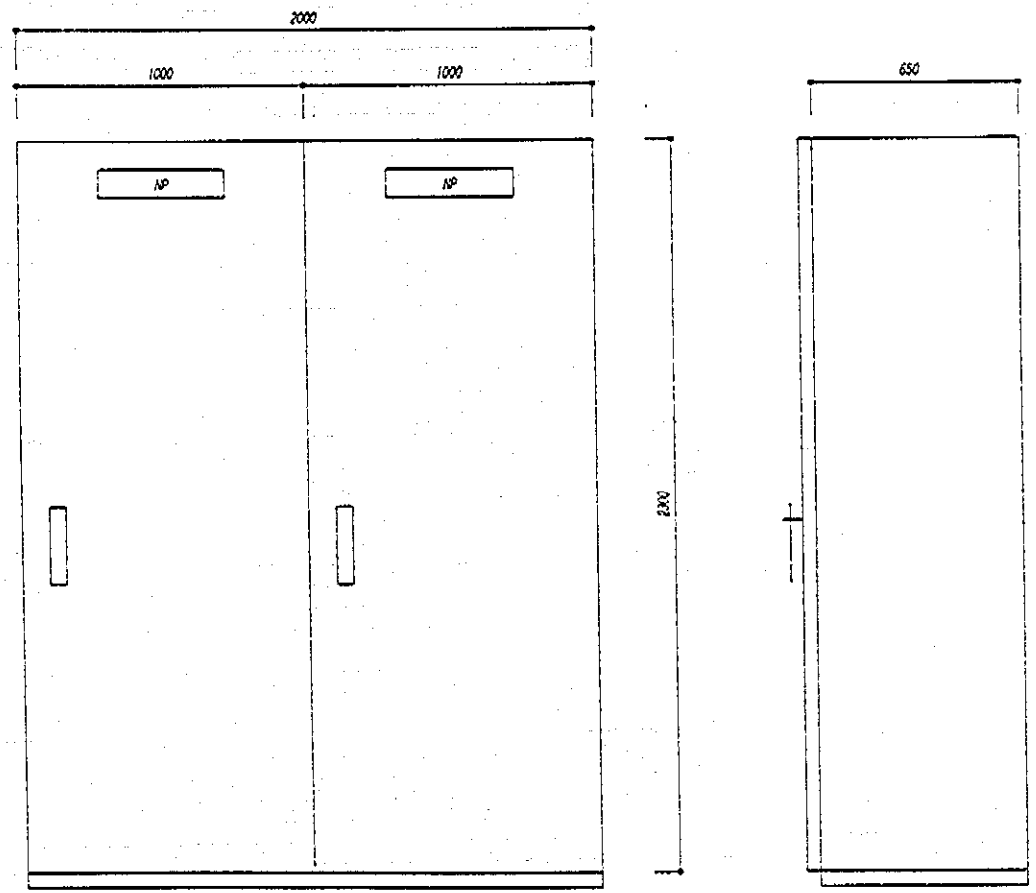

(SIGNAL TRANSFER PANEL)

Fig. 13 Signal Tranfer Panel of Remote Control System

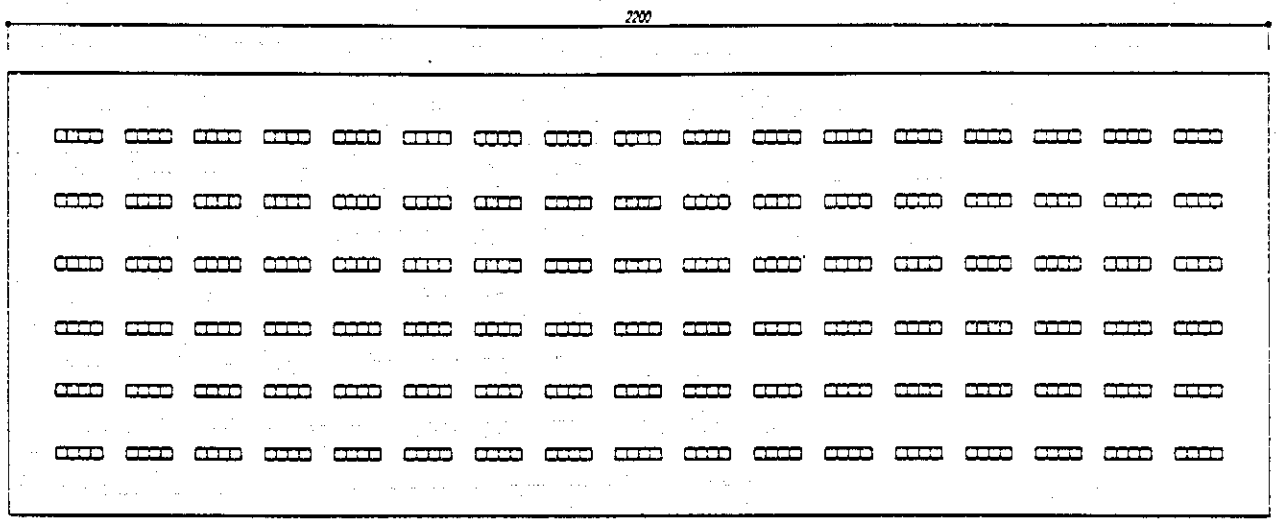

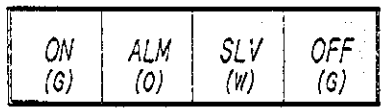

DETAIL

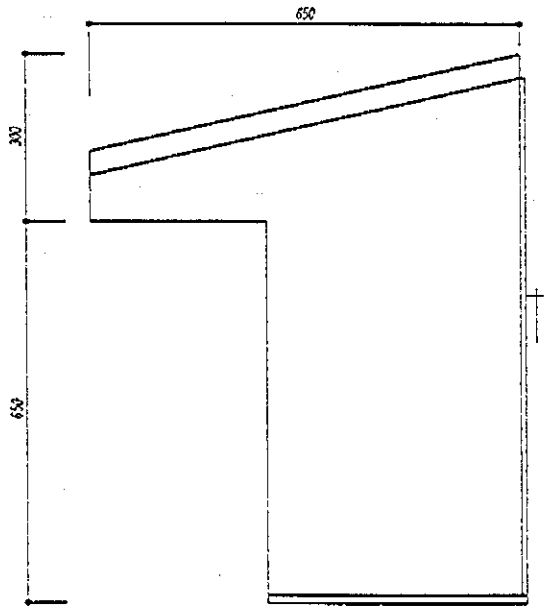

PUMP CONTROL DESK

Fig. 14 Pump Control Desk of Remote Control System

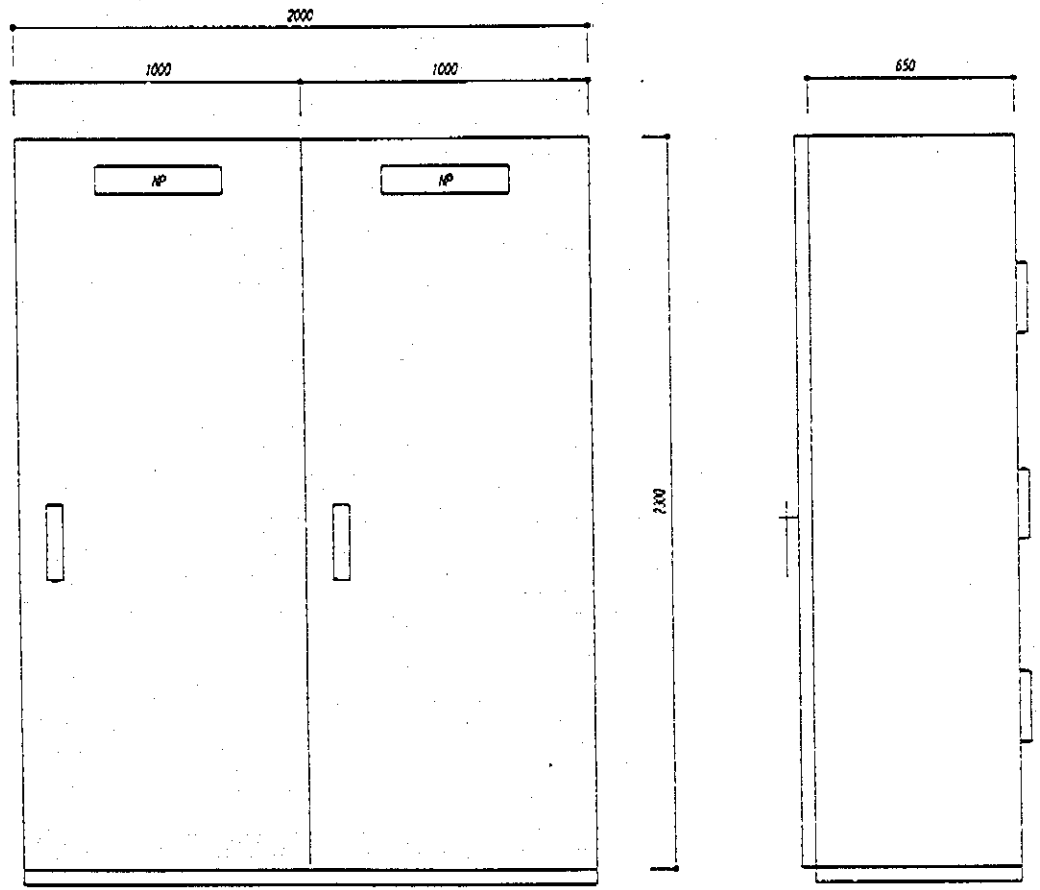

(SIGNAL TRANSCEIVER(MASTER STATION))

Fig. 15 TM/TC Panel of Remote Control System

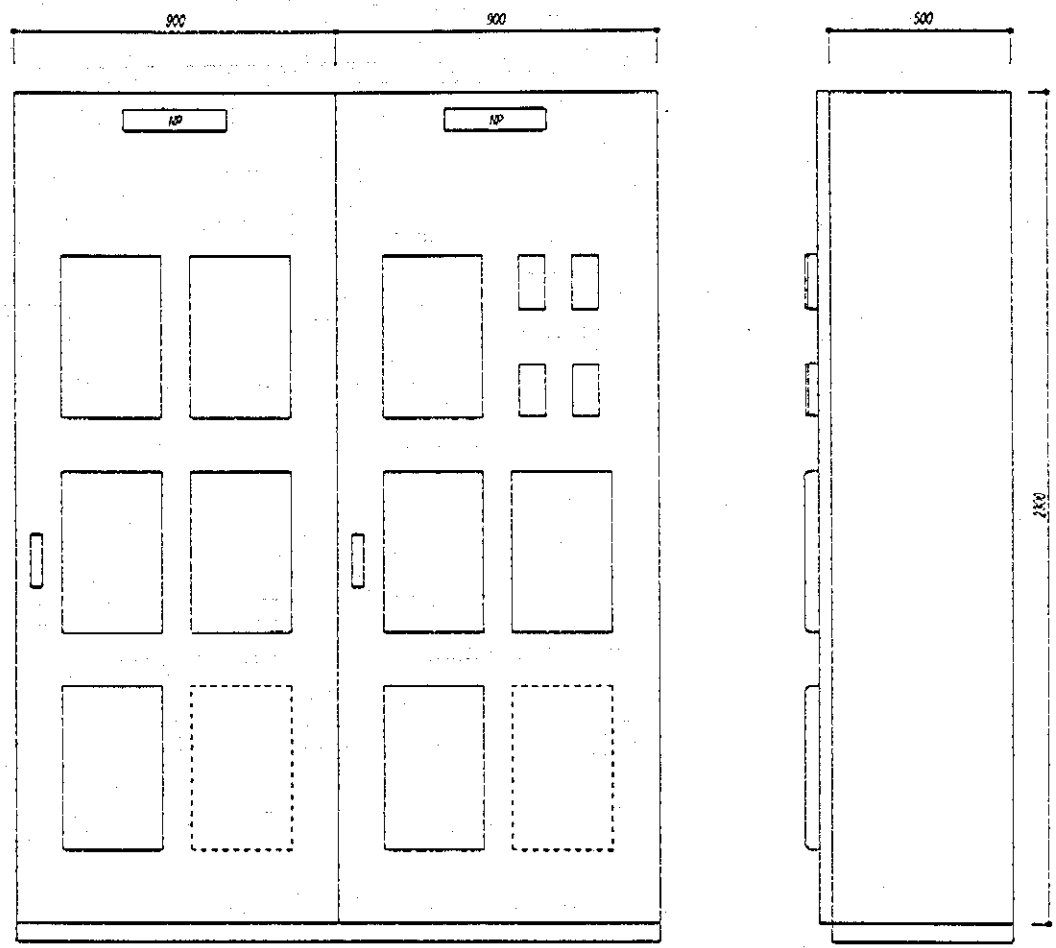

(FLOW & LEVEL MEASURING PANEL)

Fig. 16 Flow and Water Level Monitoring Panel

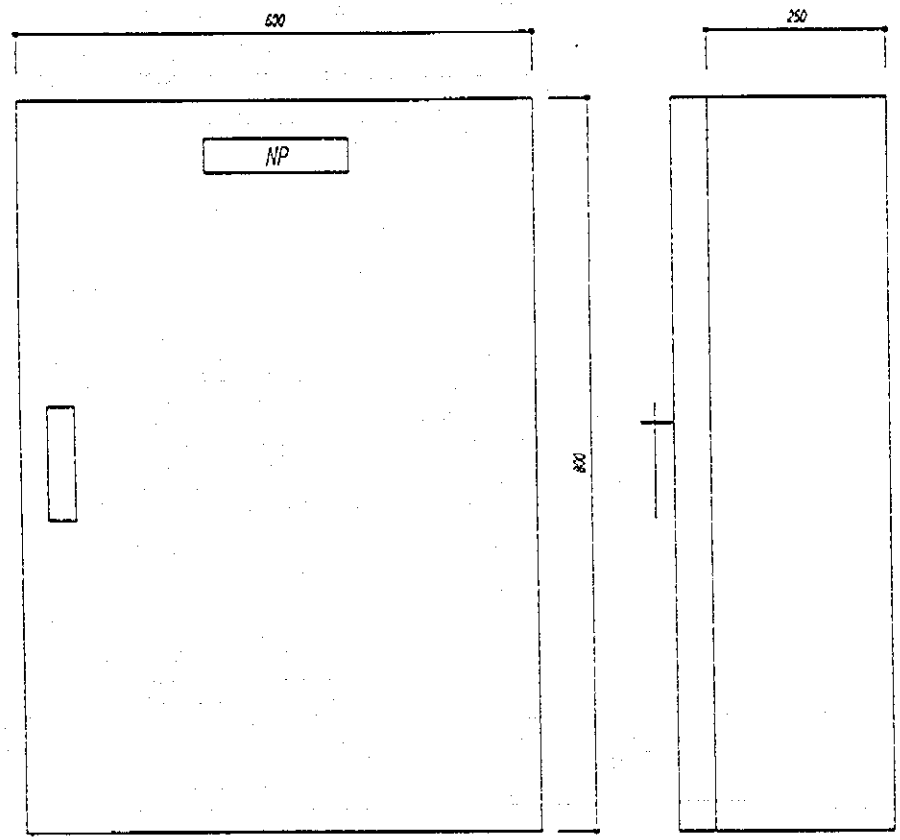

SIGNAL TRANSCEIVER (SLAVE STATION)

Fig. 17 TM/TC Panel of Intake Pumps of Remote Control System

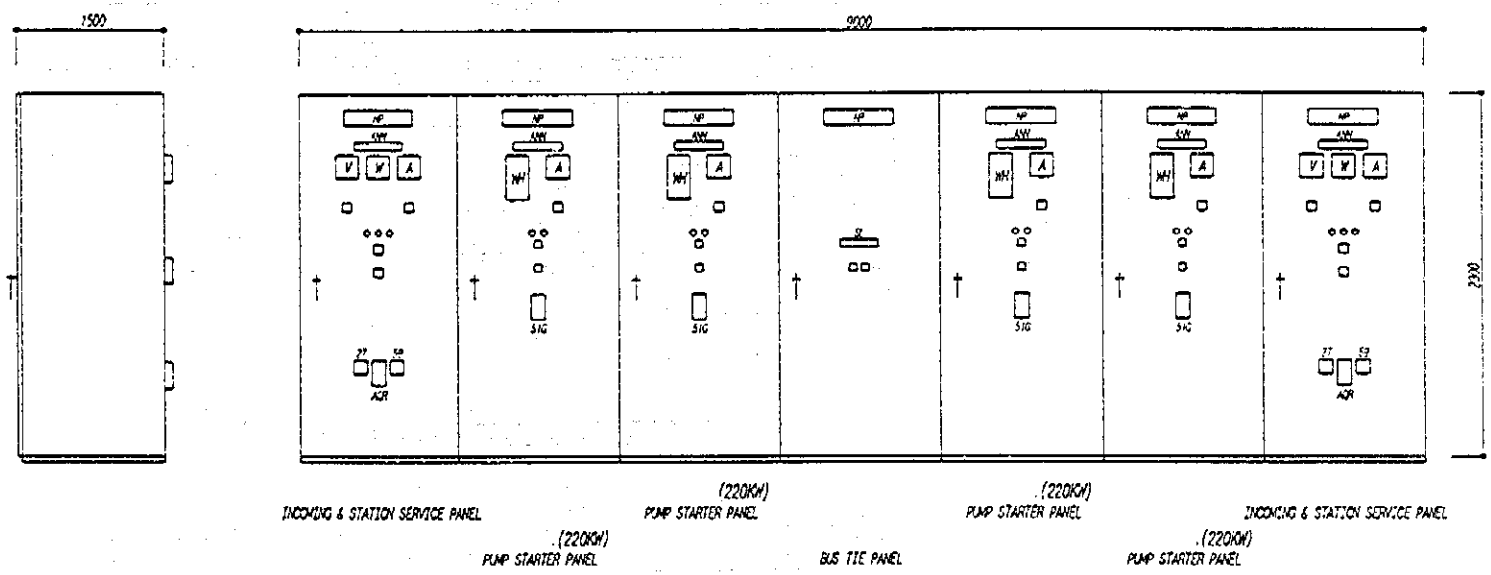

Fig. 18 Starter Panel of Distribution Pumps

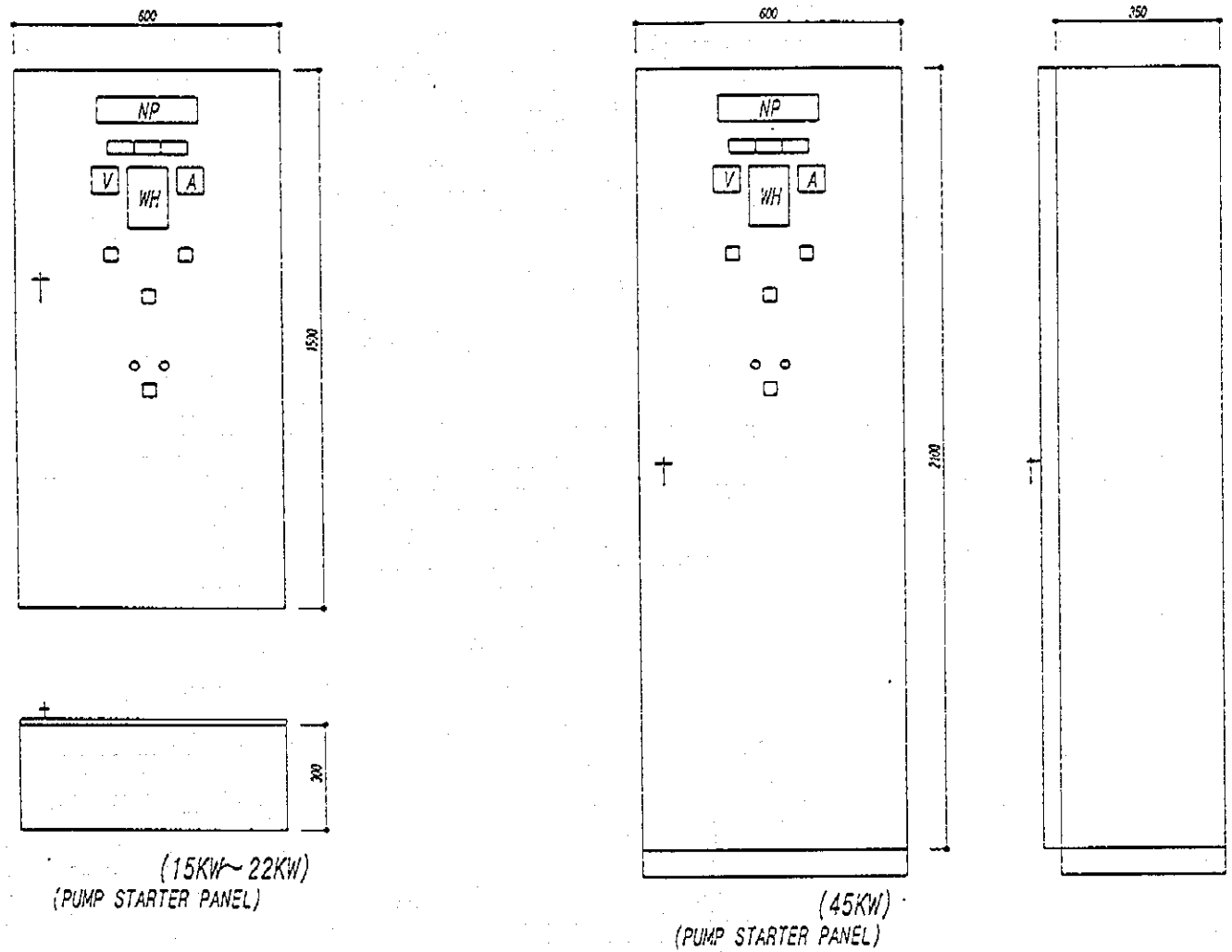

Fig. 19 Starter Panel of Intake Pumps

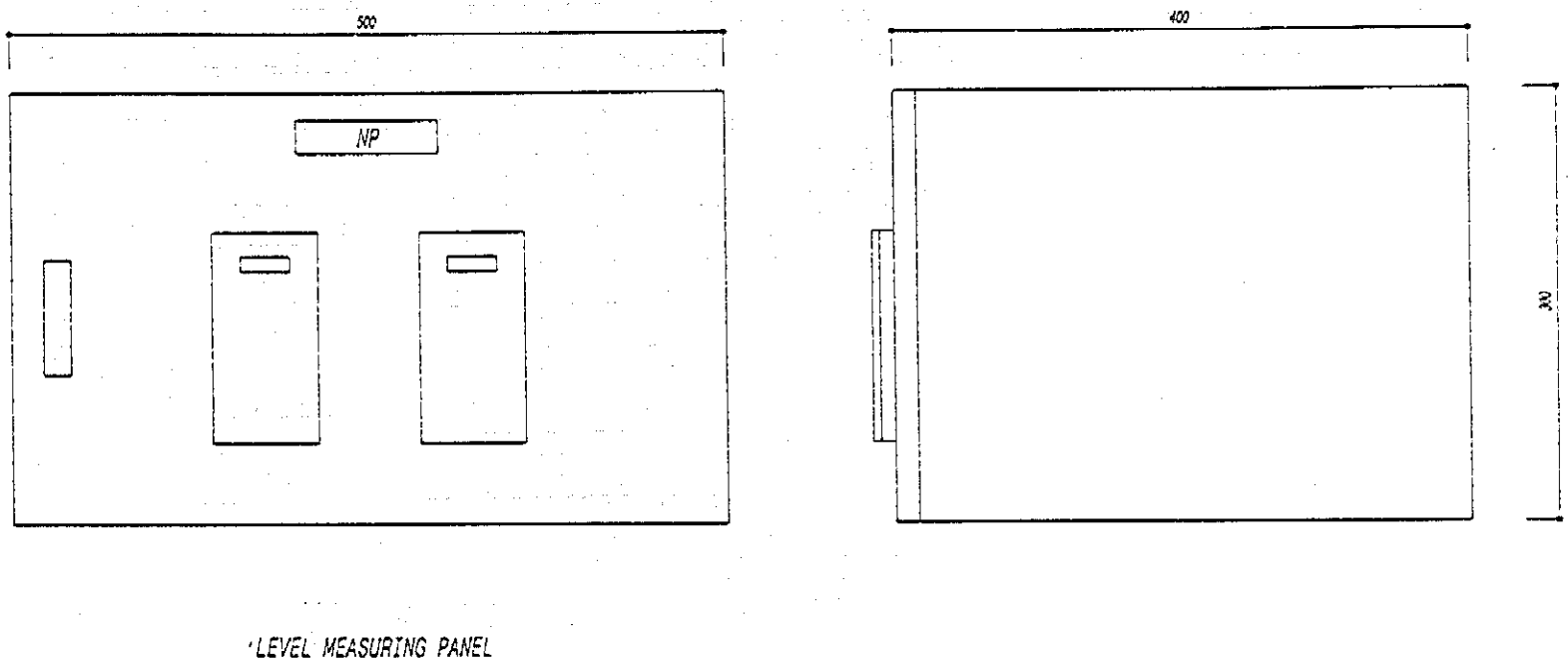

Fig. 20 Water Level Measuring Panel

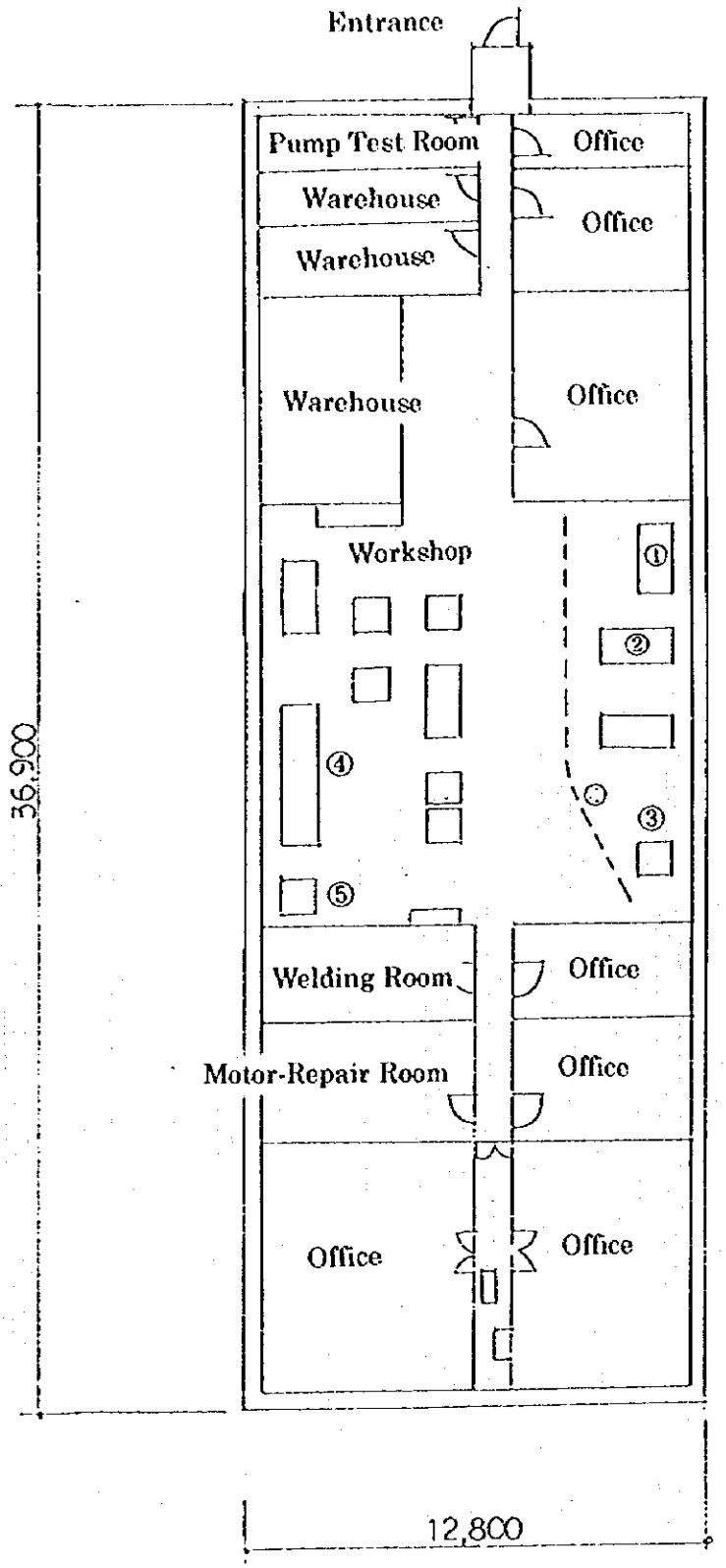

Renewal Machine Tools

① Lathe (Large Type Φ 650 x L8,000

② Shaper

③ Radial Drill

④ Lathe (Small Type)

⑤ Bench Drilling Machine

Fig. 21 Layout of Renewal Machine Tools for Workshop

APPENDIX A-10 DATA COLLECTION

APPENDIX A-10 DATA COLLECTION

I. Drawings

1. Topography

① Topographic Map	S = 1 / 50,000	1 sheet
② ditto	S = 1 / 10,000	2 sheets
③ ditto	S = 1 / 100,000	1 sheet
④ Contour Map	S = 1 / 10,000	1 sheet

2. Intake / Distribution Facilities

2-1. General Plan

① Location Map for Intake P/S S = 1 / 10,000	2 sheets

2-2. Upper Water Source

① Plan	3 sheets
② Profile	58 sheets

2-3. Central Water Source

① Profile (P /S No.1~5)	1 sheet
② Profile (P /S No.1~8)	1 sheet
③ Profile (P /S No.1~12)	1 sheet
④ Railroad Crossing	1 sheet

2-4. Meat Complex Water Source
Not Available

2-5. Industrial Water Source
Not Available

2-6. Intake P /S

① structural Plan	4 sheets
② Detailed Plan	5 sheets
③ Detailed Diagram (Turbin Pump)	3 sheets
④ Detailed Diagram (Centrifugal Pump)	2 sheets
⑤ Pump Installation Plan	2 sheets

3. Distribution Pipeline

① Pipeline Network Plan	S = 1 / 10,000	1 sheet
② Pipeline Network Plan 2	S = 1 / 10,000	1 sheet
③ Pipeline Network Plan 3	S = 1 / 10,000	1 sheet
④ Pipeline Network Plan 4	S = 1 / 10,000	1 sheet

4. Distribution Facilities

4 - 1. General Plan

① Geological Map for Reservoir Site	1 sheet

4 - 2. Upper Stream Source
① Distribution P / S, Electrical Sub-station 1 sheet

4 - 3. Central Water Source
① Distribution P /S, Old Pump House 1 sheet
② ditto , Chlorinating Equipment 1 sheet
③ ditto , Old Storage Reservoir 1 sheet

4 - 4. Meat Complex Water Source
Not Available

4 - 5. Industrial Water Source
Not Available

4 - 6. Tasgen Booster P/ S
① Structural Drawing (Pump House) 1 sheet
② ditto (Storage Reservoir) 1 sheet

4 -7. Others
① Structural Drawing (Mahaar Reservoir) 1 sheet
② ditto (Bariin Duriigen P/S, Storage Reservoir) 1 sheet

5. Sewerage
① Sewer Pipeline Network Plan 1 sheet
② Sewage Treatment Plant General Plan 1 sheet

II. Documents

① Mongolian Annual Economic Development Report,
National Development Board, May, 1995

② Guidelines for Construction Investment 1995-2000
Secretariate Bureau, Ulaanbaatar City, 1995

③ Mongolia Economical Development Program
Economic Development Bureau, 1994

④ Water Supply / Sewerage Operational Regulations
Ministry of Infrastructure Development , 1983

⑤ Water Supply / Sewerage Operational Regulations (Revisional Draft)
Ministry of Infrastructure Development , 1995

⑥ Socio-Economy in Mongolia, Social Policy Division
Secretariate Bureau, Ulaanbaatar City

⑦ Water Quality
Central Standard Center, Ulaanbaatar City, 1993

APPENDIX A-11 SUPPLY OF SPARE PARTS

APPENDIX A-11 SPARE PARTS

SPARE PARTS FOR INTAKE PUMP
IMPELLER BEARING SHAFT COUPLING PUMP SHAFT STRAINER SUBMERSIBLE MOTOR AIR VALVE PRESSURE GAUGE FLOW INDICATOR CHECK VALVE ELECTROMAGNETIC CONTACTOR PROTECTION REPLAY INDICATING INSTRUMENT AUXILIARY RELAY TIME-DELAY RELAY CIRCUIT BREAKER INSTRUMENT TRANSFORMER BUTTON SWITCH SELECTOR SWITCH SIGNAL LAMP FUSE
SPARE PARTS FOR DISTRIBUTION PUMP
IMPELLER LINDER RING SLEEVE BEARING SHAFT COUPLING PUMP SHAFT GLAND PACKING GASKET PRESSURE GAUGE INSTRUMENT TRANSFORMER ELECTROMAGNETIC CONTACTOR PROTECTION REPLAY INDICATING INSTRUMENT AUXILLARY RELAY TIME-DELAY RELAY CIRCUIT BREAKER BUTTON SWITCH SIGNAL LAMP FUSE POWER CABLE FLOW INDICATOR WATER LEVEL INDICATOR
SPARE PARTS FOR REMOTE CONTROL SYSTEM
REMOTE TERMINAL UNIT SEQUENCER AUXILIARY RELAY BUTTON SWITCH SIGNAL LAMP CUMMUNICAITON CABLE LIGHTNING ARRESTER

JICA