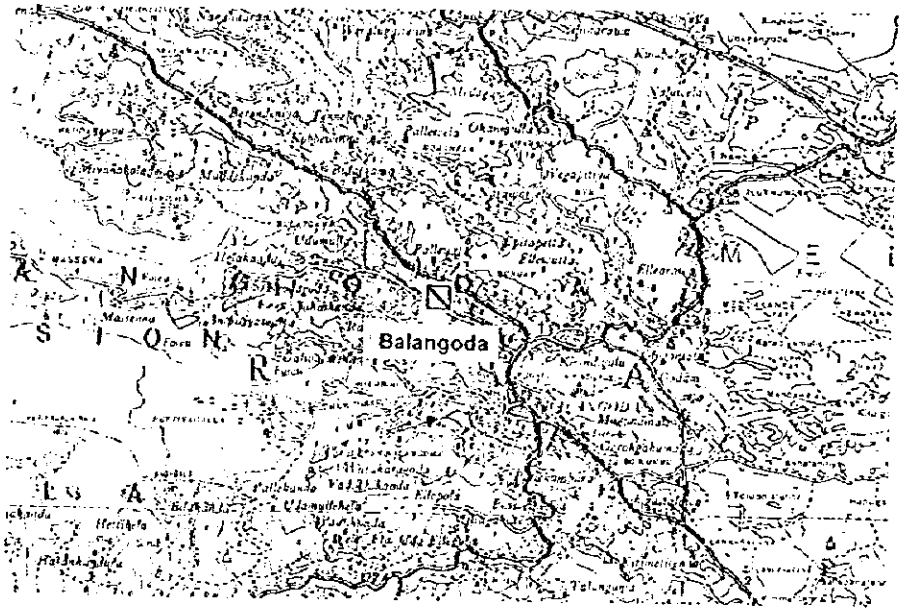

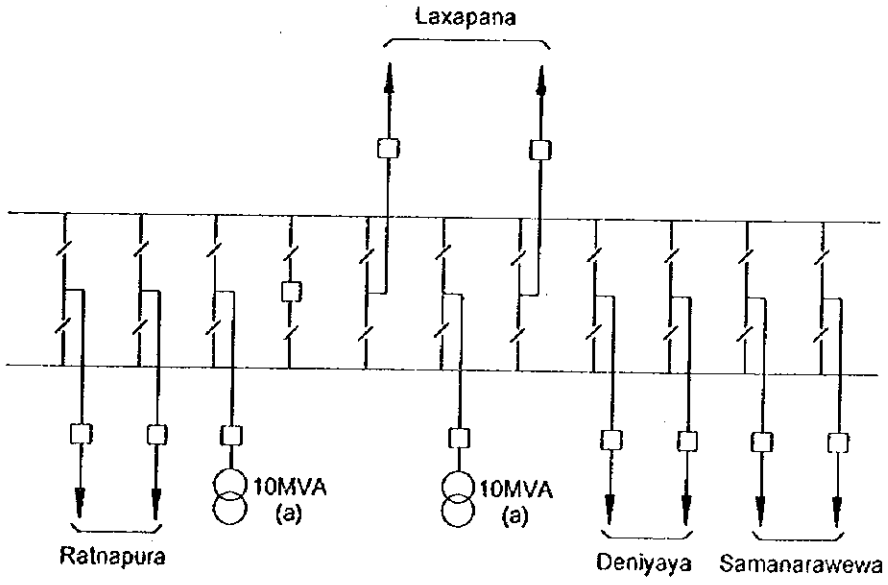

(I) Proposed Extension Plan

- Not shaded : Existing
- : up to 2000

(II) Others

(a) Existing 10MVA transformers are planned to be replaced with 31.5MVA under PSDP.

CEYLON ELECTRICITY BOARD	JAPAN INTERNATIONAL COOPERATION AGENCY NIPPON KOEI CO., LTD. Consulting Engineer	MASTER PLAN STUDY FOR DEVELOPMENT OF THE TRANSMISSION SYSTEM OF THE CEYLON ELECTRICITY BOARD IN THE DEMOCRATIC SOCIALIST REPUBRIC OF SRI LANKA	TITLE 図A7.2 - 8 位置図及び単線結線図 バランゴダ変電所

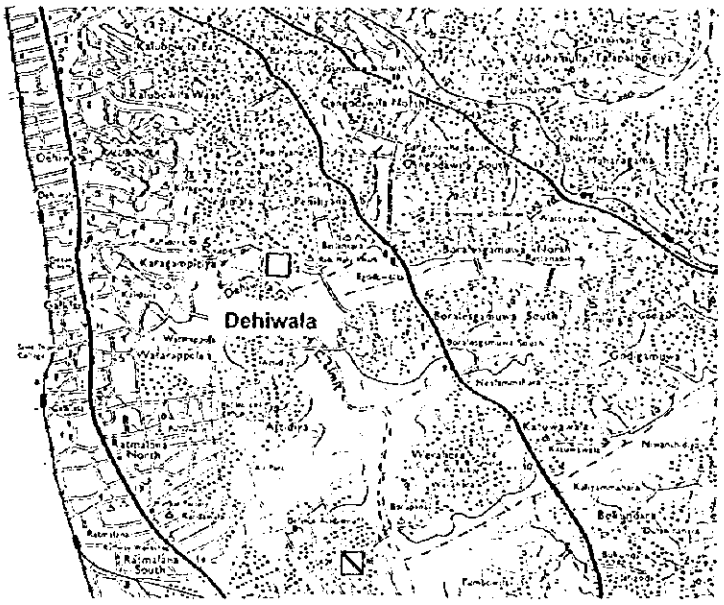

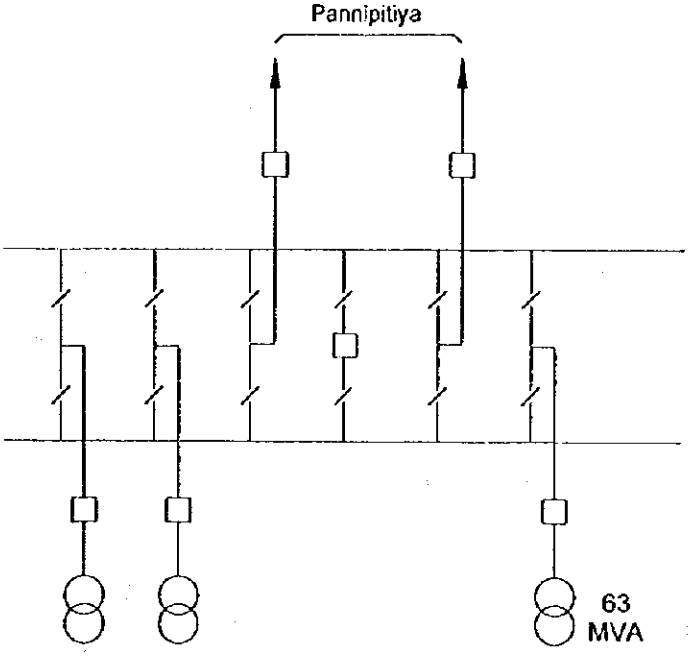

Notes

(I) Proposed Extension Plan

- Not shaded : up to 2000
- : up to 2010

(II) Others

(a) Pannipitiya - Dehiwala line : 220kV construction

CEYLON ELECTRICITY BOARD	JAPAN INTERNATIONAL COOPERATION AGENCY NIPPON KOEI CO., LTD. Consulting Engineer	MASTER PLAN STUDY FOR DEVELOPMENT OF THE TRANSMISSION SYSTEM OF THE CEYLON ELECTRICITY BOARD IN THE DEMOCRATIC SOCIALIST REPUBRIC OF SRI LANKA	TITLE 図A7.2 - 9 位置図及び単線結線図 デヒワラ変電所

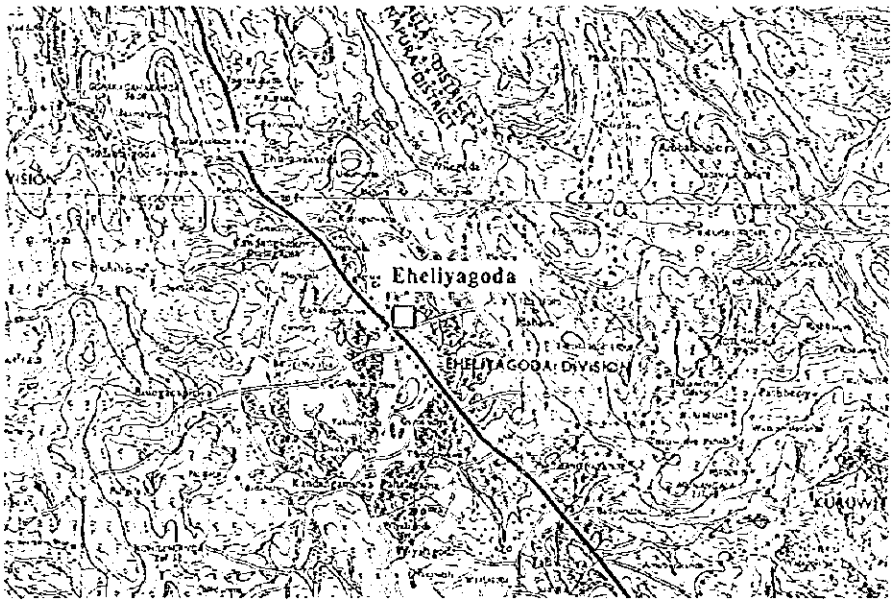

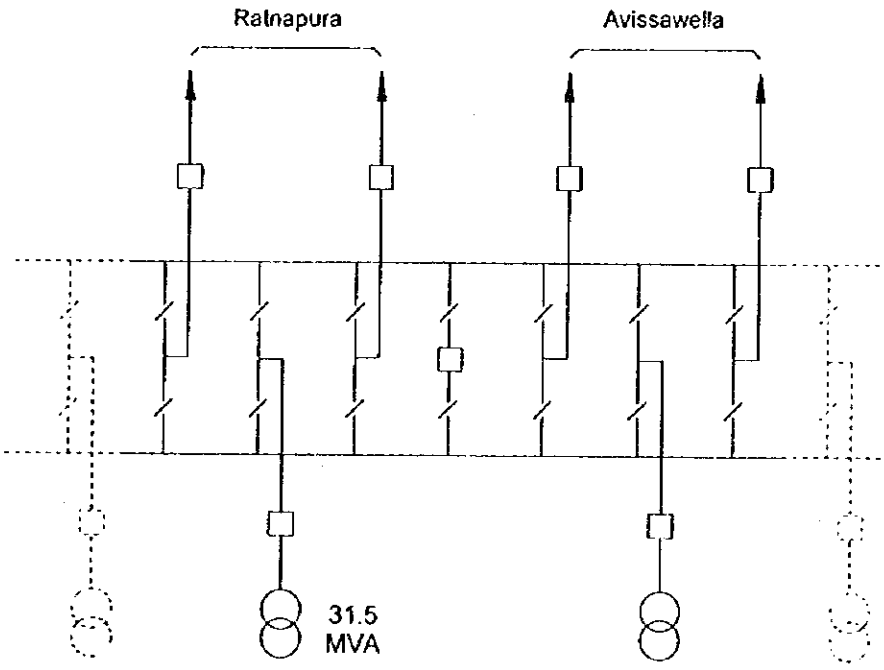

Notes

(I) Proposed Extension Plan

- Not shaded : up to 2010
- Dotted line : up to 2015 or after

CEYLON ELECTRICITY BOARD	JAPAN INTERNATIONAL COOPERATION AGENCY NIPPON KOEI CO., LTD. Consulting Engineer	MASTER PLAN STUDY FOR DEVELOPMENT OF THE TRANSMISSION SYSTEM OF THE CEYLON ELECTRICITY BOARD IN THE DEMOCRATIC SOCIALIST REPUBRIC OF SRI LANKA	TITLE 図A7.2 - 10 位置図及び単線結線図 エヘリヤゴダ変電所

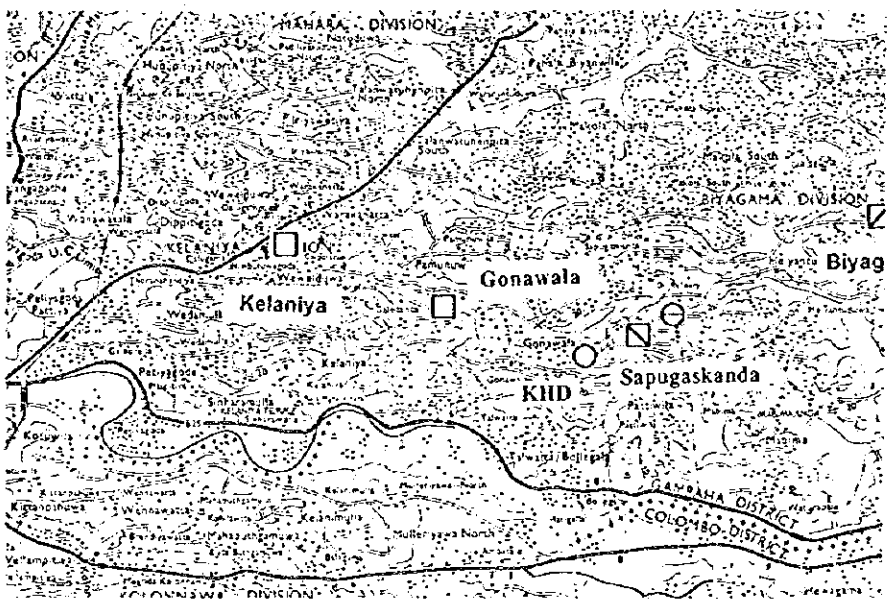

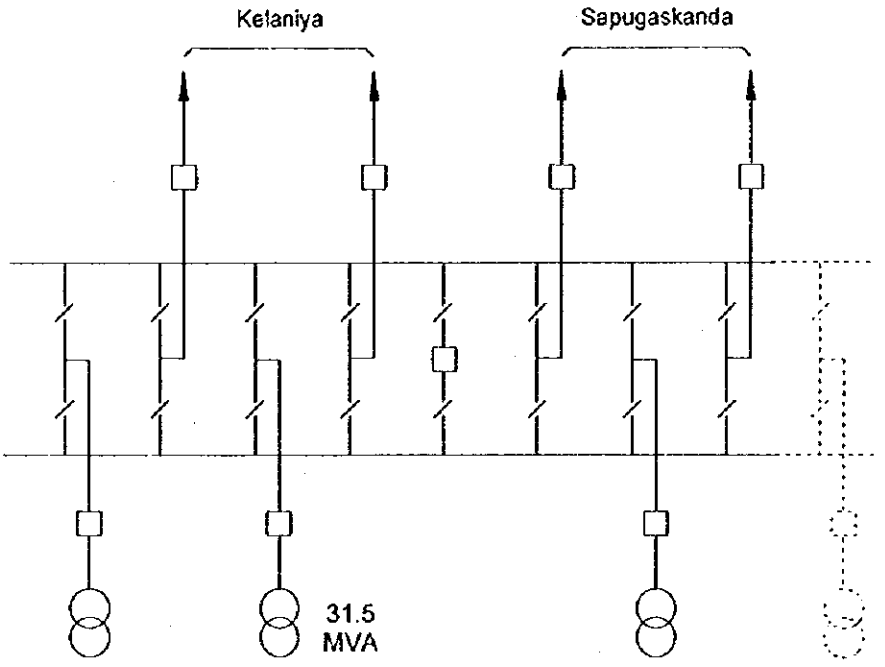

Notes

(I) Proposed Extension Plan

- Not shaded : up to 2005
- Dotted line : up to 2010

CEYLON ELECTRICITY BOARD	JAPAN INTERNATIONAL COOPERATION AGENCY NIPPON KOEI CO., LTD. Consulting Engineer	MASTER PLAN STUDY FOR DEVELOPMENT OF THE TRANSMISSION SYSTEM OF THE CEYLON ELECTRICITY BOARD IN THE DEMOCRATIC SOCIALIST REPUBRIC OF SRI LANKA	TITLE 図A7.2 - 11 位置図及び単線結線図 ゴナワラ変電所

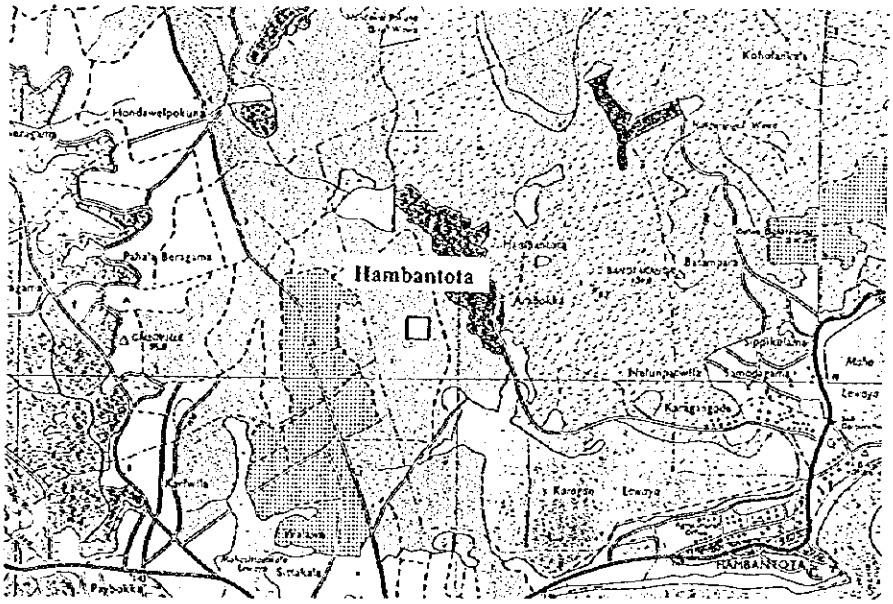

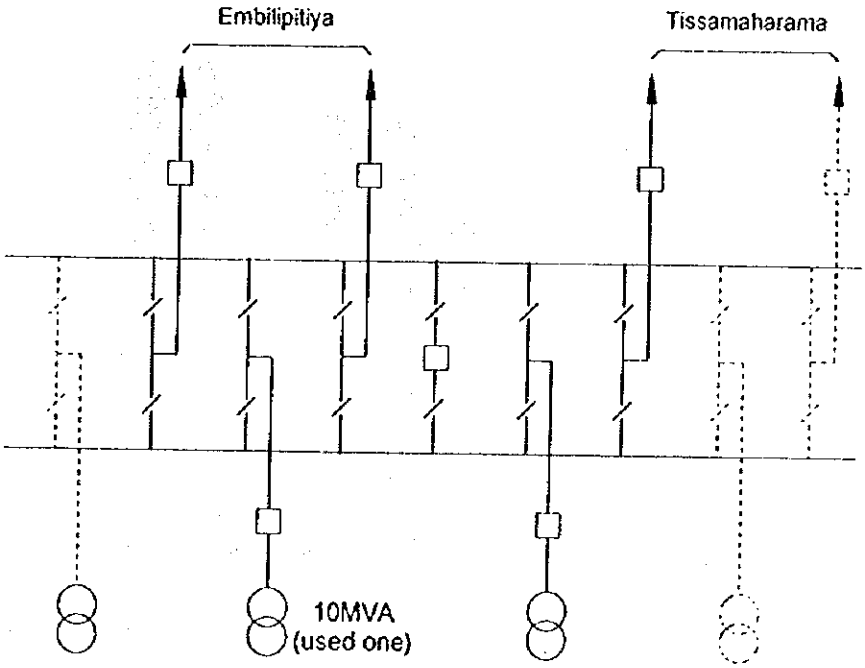

Notes

(I) Proposed Extension Plan

- Not shaded : up to 2005
- : up to 2010
- Dotted line : up to 2015 or after

CEYLON ELECTRICITY BOARD	JAPAN INTERNATIONAL COOPERATION AGENCY NIPPON KOEI CO., LTD. Consulting Engineer	MASTER PLAN STUDY FOR DEVELOPMENT OF THE TRANSMISSION SYSTEM OF THE CEYLON ELECTRICITY BOARD IN THE DEMOCRATIC SOCIALIST REPUBRIC OF SRI LANKA	TITLE 図A7.2 - 12 位置図及び単線結線図 _ハンバントタ変電所

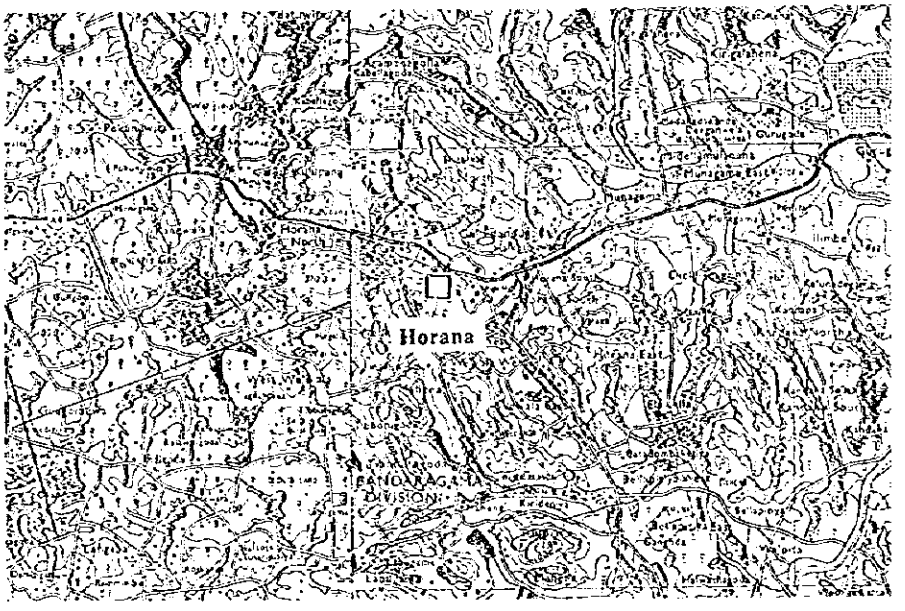

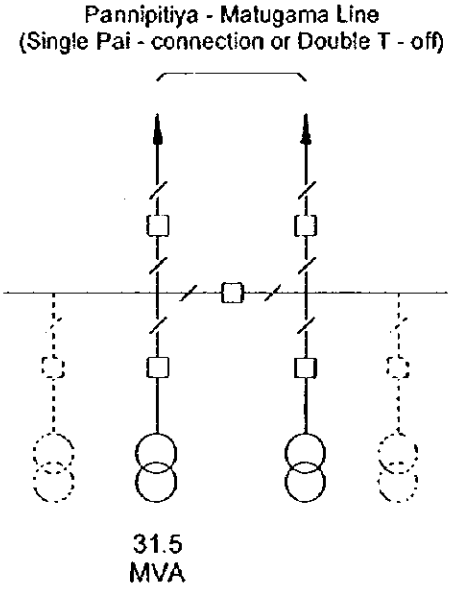

Notes

(1) Proposed Extension Plan

- Not shaded : up to 2005
- Dotted line : up to 2010 or after

CEYLON ELECTRICITY BOARD	JAPAN INTERNATIONAL COOPERATION AGENCY NIPPON KOEI CO., LTD. Consulting Engineer	MASTER PLAN STUDY FOR DEVELOPMENT OF THE TRANSMISSION SYSTEM OF THE CEYLON ELECTRICITY BOARD IN THE DEMOCRATIC SOCIALIST REPUBRIC OF SRI LANKA	TITLE 図A7.2 - 13 位置図及び単線結線図 ホラナ変電所

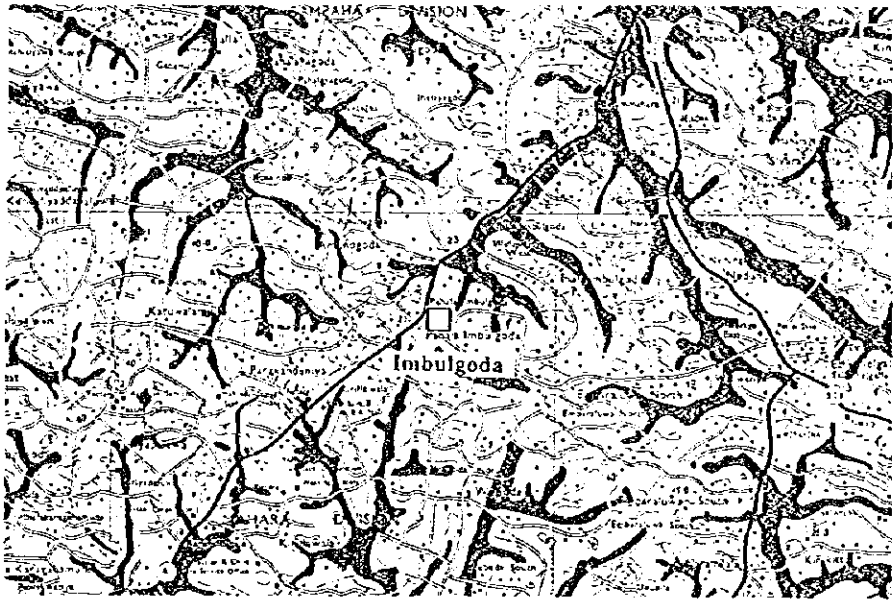

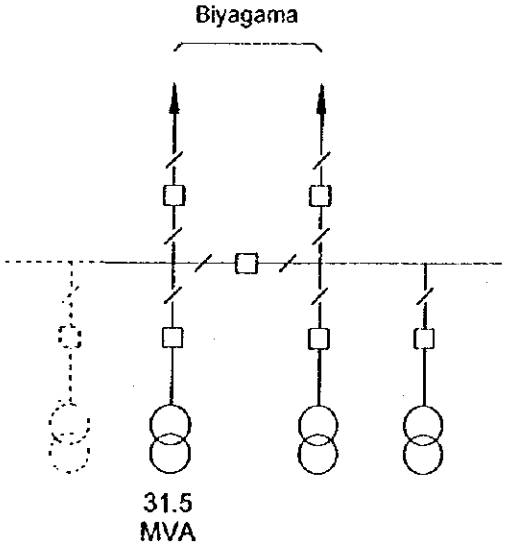

Notes

(I) Proposed Extension Plan

- Not shaded : up to 2010
- Dotted line : up to 2015 or after

(II) Others

(a) T/L bays at Biyagama for 132kV line Pannipitiya line are available.

CEYLON ELECTRICITY BOARD	JAPAN INTERNATIONAL COOPERATION AGENCY NIPPON KOEI CO., LTD. Consulting Engineer	MASTER PLAN STUDY FOR DEVELOPMENT OF THE TRANSMISSION SYSTEM OF THE CEYLON ELECTRICITY BOARD IN THE DEMOCRATIC SOCIALIST REPUBRIC OF SRI LANKA	TITLE 図A7.2 - 14 位置図及び単線結線図 _インブルゴダ変電所

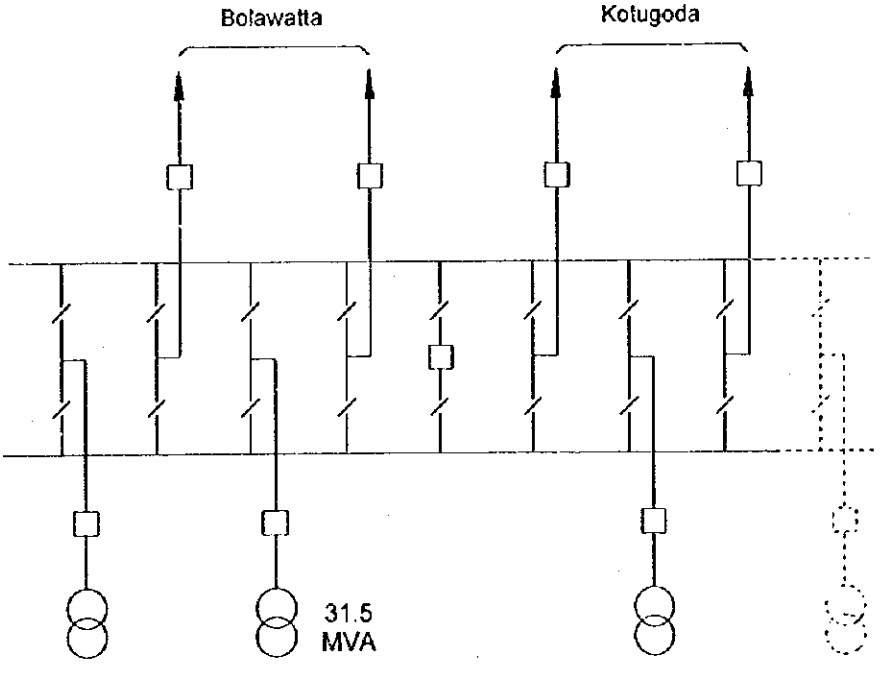

Notes

(I) Proposed Extension Plan

- Not shaded : up to 2005
- : up to 2010
- Dotted line : up to 2015 or after

CEYLON ELECTRICITY BOARD	JAPAN INTERNATIONAL COOPERATION AGENCY NIPPON KOEI CO., LTD. Consulting Engineer	MASTER PLAN STUDY FOR DEVELOPMENT OF THE TRANSMISSION SYSTEM OF THE CEYLON ELECTRICITY BOARD IN THE DEMOCRATIC SOCIALIST REPUBRIC OF SRI LANKA	TITLE 図A7.2 - 15 位置図及び単線結線図 カタナ変電所

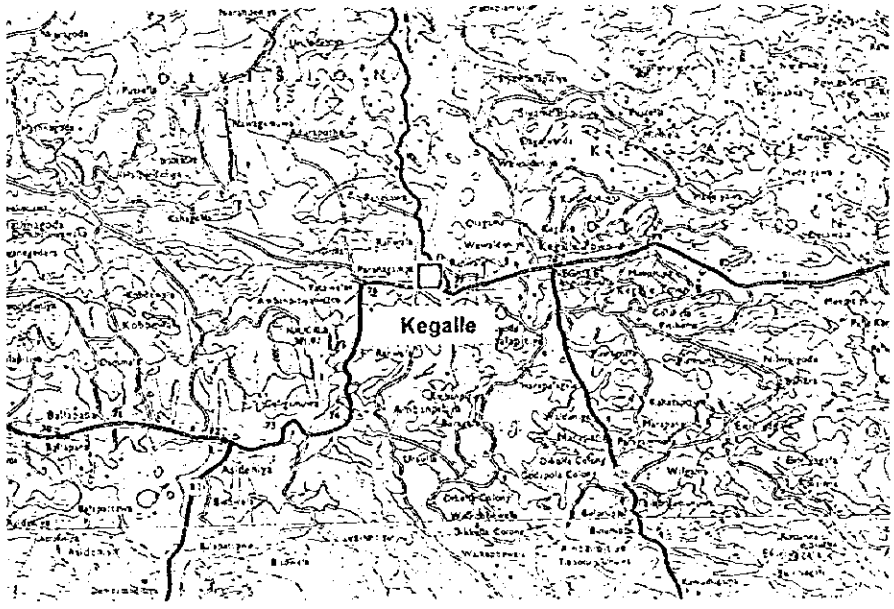

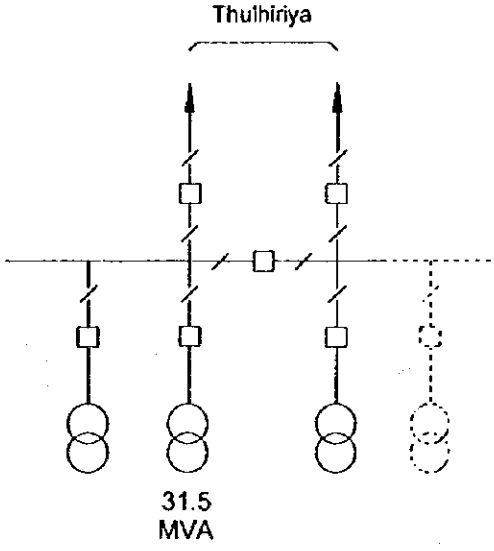

Notes

(1) Proposed Extension Plan

- Not shaded : up to 2005
- : up to 2010
- Dotted line : up to 2015 or after

CEYLON ELECTRICITY BOARD	JAPAN INTERNATIONAL COOPERATION AGENCY NIPPON KOEI CO., LTD. Consulting Engineer	MASTER PLAN STUDY FOR DEVELOPMENT OF THE TRANSMISSION SYSTEM OF THE CEYLON ELECTRICITY BOARD IN THE DEMOCRATIC SOCIALIST REPUBRIC OF SRI LANKA	TITLE 図A7.2 - 16 位置図及び単線結線図 ケゴール変電所

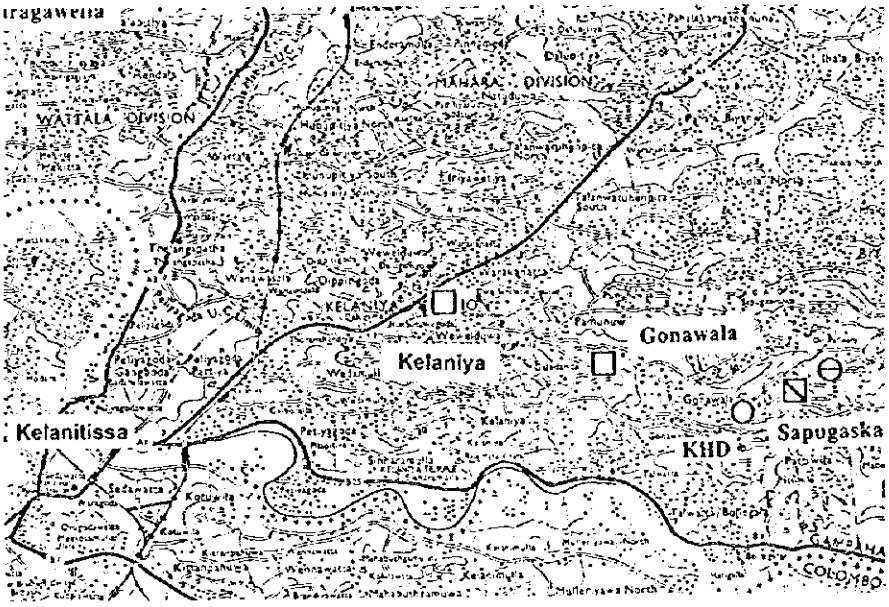

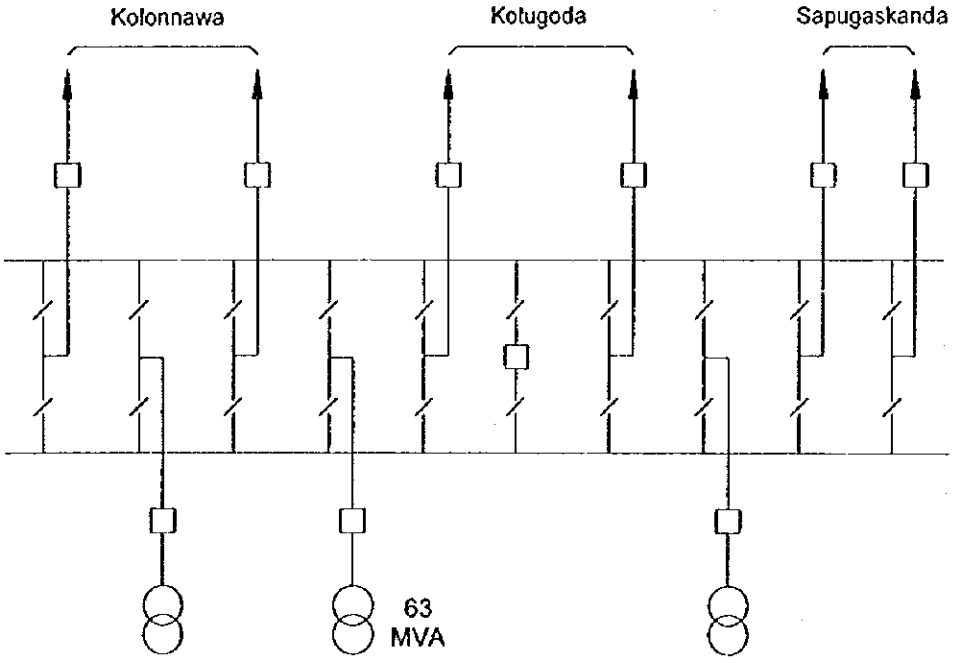

Notes

(I) Proposed Extension Plan

- Not shaded : up to 2000
- : up to 2010

(II) Others

(a) GIS is recommendable taking land acquisition problems into consideration.

CEYLON ELECTRICITY BOARD	JAPAN INTERNATIONAL COOPERATION AGENCY NIPPON KOEI CO., LTD. Consulting Engineer	MASTER PLAN STUDY FOR DEVELOPMENT OF THE TRANSMISSION SYSTEM OF THE CEYLON ELECTRICITY BOARD IN THE DEMOCRATIC SOCIALIST REPUBRIC OF SRI LANKA	TITLE 図A7.2 - 17 位置図及び単線結線図 ケラニヤ変電所

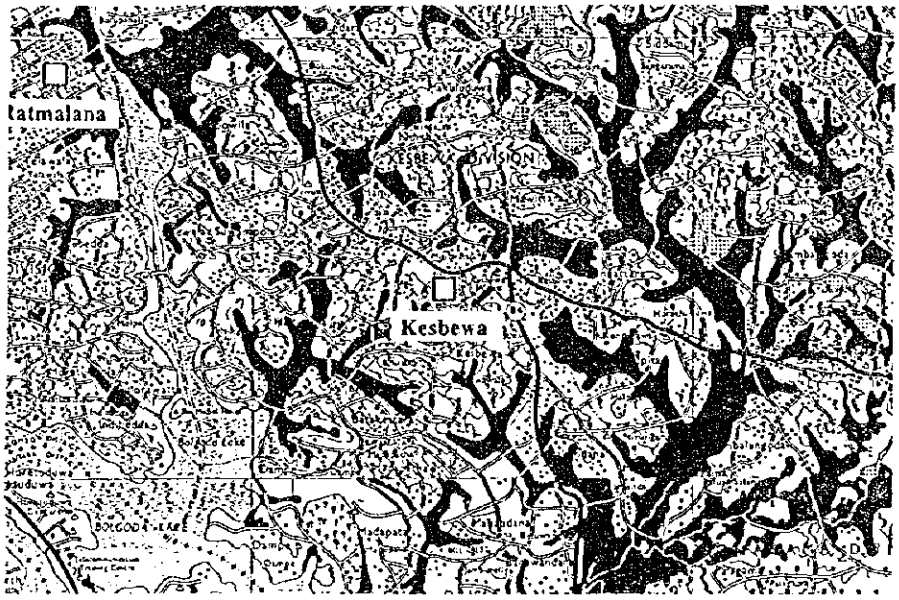

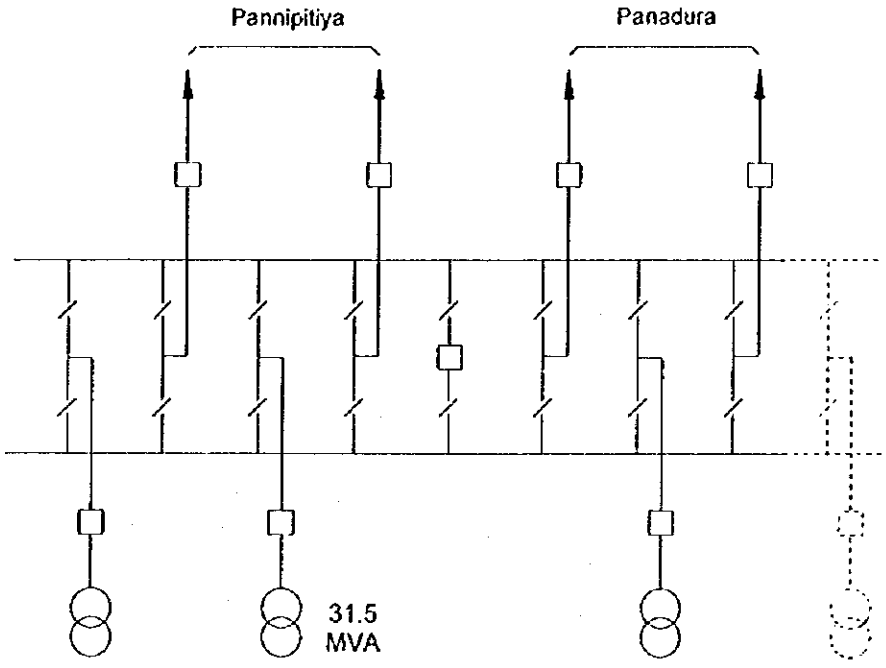

Notes

(I) Proposed Extension Plan

- Not shaded : up to 2010
- Dotted line : up to 2015 or after

CEYLON ELECTRICITY BOARD	JAPAN INTERNATIONAL COOPERATION AGENCY NIPPON KOEI CO., LTD. Consulting Engineer	MASTER PLAN STUDY FOR DEVELOPMENT OF THE TRANSMISSION SYSTEM OF THE CEYLON ELECTRICITY BOARD IN THE DEMOCRATIC SOCIALIST REPUBRIC OF SRI LANKA	TITLE 図A7.2 - 18 位置図及び単線結線図 ケスベワ変電所

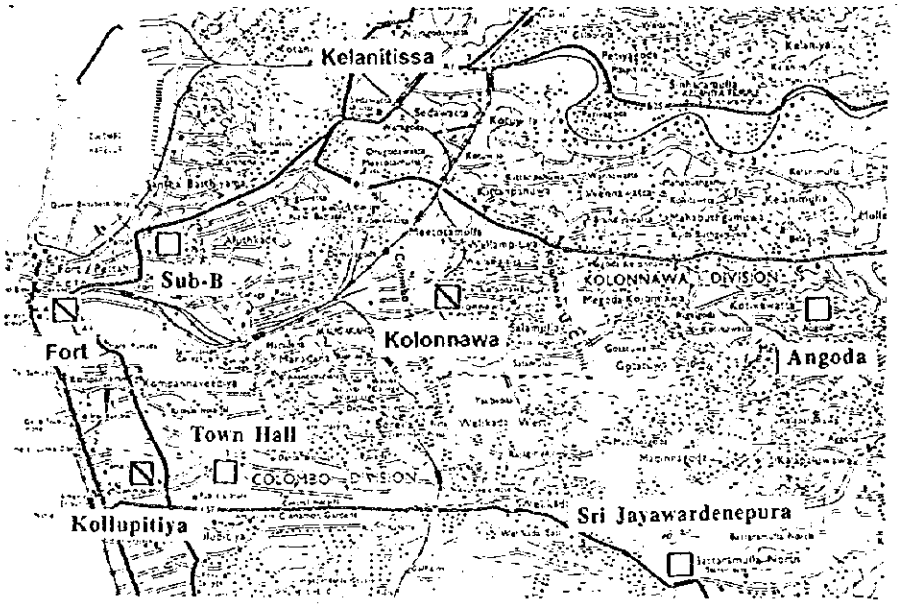

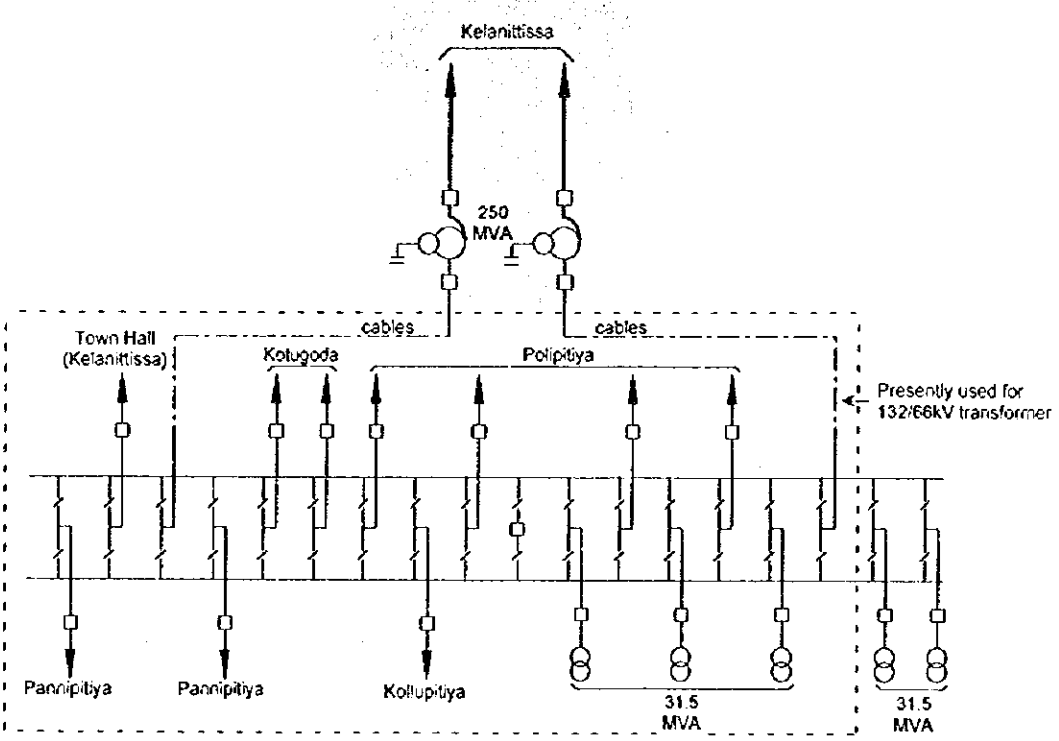

Notes

(I) Proposed Extension Plan

- No shaded : Existing
- : Existing, but renoated up to 2000
- : up to 2005

(II) Other

(a) 220kV switchgears : GIS

CEYLON ELECTRICITY BOARD	JAPAN INTERNATIONAL COOPERATION AGENCY NIPPON KOEI CO., LTD. Consulting Engineer	MASTER PLAN STUDY FOR DEVELOPMENT OF THE TRANSMISSION SYSTEM OF THE CEYLON ELECTRICITY BOARD IN THE DEMOCRATIC SOCIALIST REPUBRIC OF SRI LANKA	TITLE 図A7.2 - 19 位置図及び単線結線図 コロナワ変電所

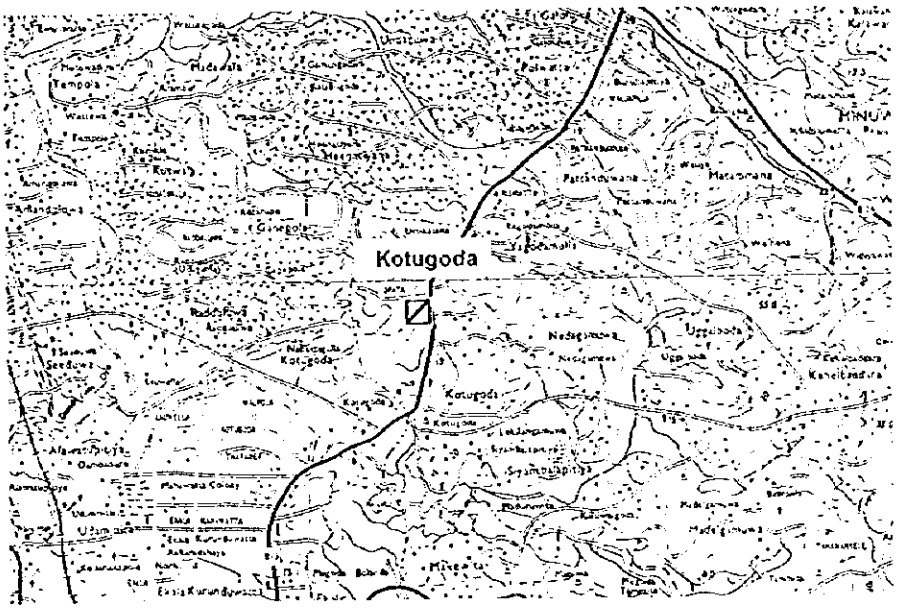

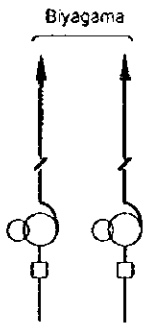

existing 220kV system

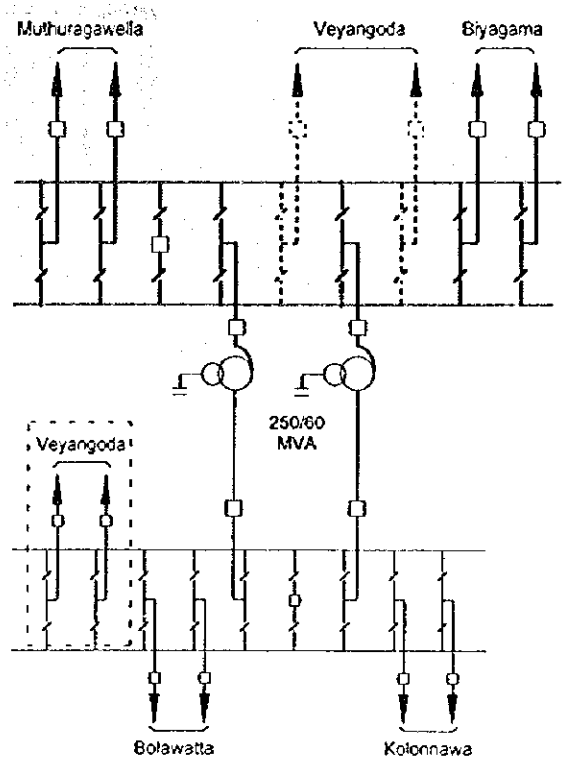

Notes

(I) Proposed Extension Plan

- Not shaded : existing
- : up to 2000 (including removal of transformers)
- Doted line : up to 2005
- : under ADB

CEYLON ELECTRICITY BOARD	JAPAN INTERNATIONAL COOPERATION AGENCY NIPPON KOEI CO., LTD. Consulting Engineer	MASTER PLAN STUDY FOR DEVELOPMENT OF THE TRANSMISSION SYSTEM OF THE CEYLON ELECTRICITY BOARD IN THE DEMOCRATIC SOCIALIST REPUBRIC OF SRI LANKA	TITLE 図A7.2 - 20 位置図及び単線結線図 コツゴダ変電所

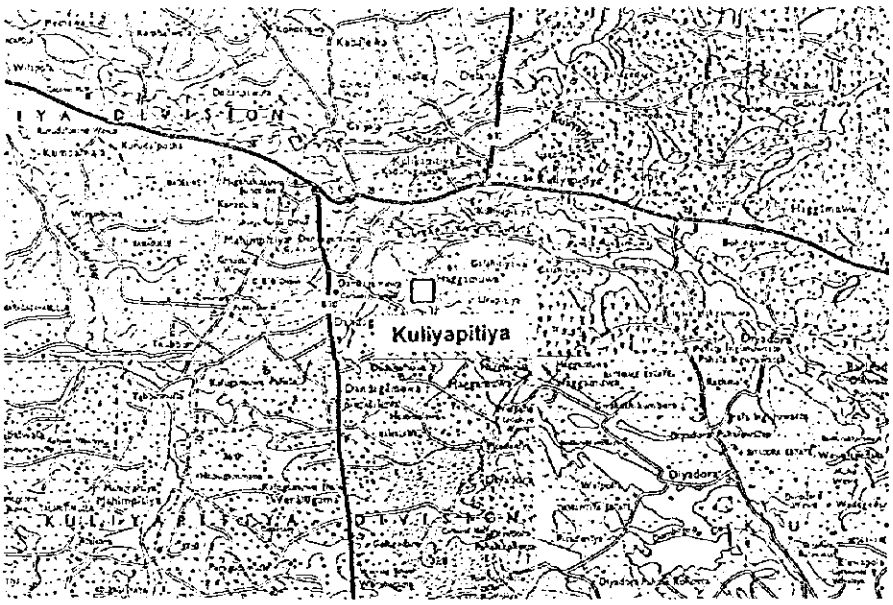

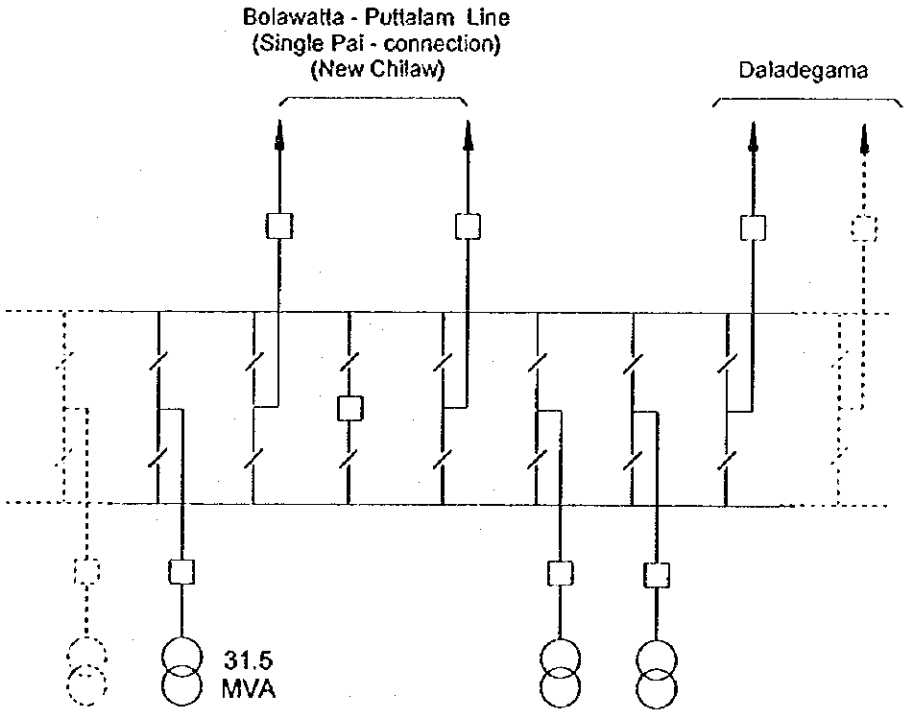

Notes

(I) Proposed Extension Plan

- Not shaded : up to 2005
- [illegible] : up to 2010
- Doted line : up to 2015 or after

(II) Others

(a) Initially, single bus system

CEYLON ELECTRICITY BOARD	JAPAN INTERNATIONAL COOPERATION AGENCY NIPPON KOEI CO., LTD. Consulting Engineer	MASTER PLAN STUDY FOR DEVELOPMENT OF THE TRANSMISSION SYSTEM OF THE CEYLON ELECTRICITY BOARD IN THE DEMOCRATIC SOCIALIST REPUBRIC OF SRI LANKA	TITLE 図A7.2 - 21 位置図及び単線結線図 クリヤピティヤ変電所

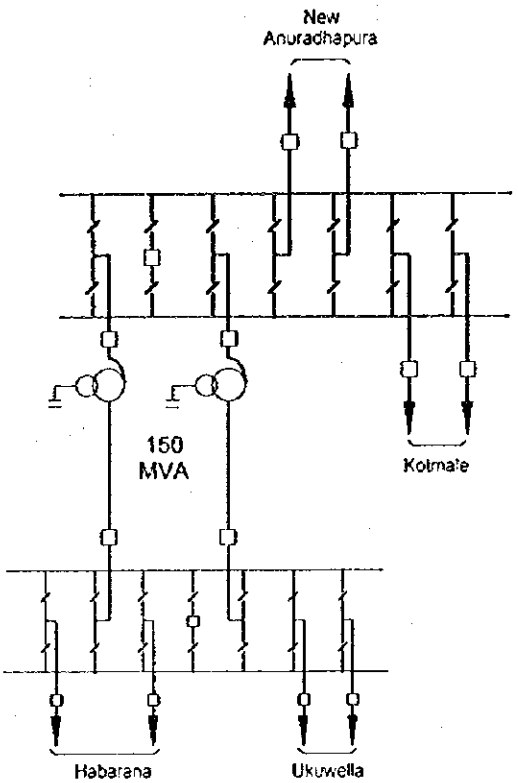

Notes

(1) Proposed Extension Plan
- Not shaded : up to 2010

CEYLON ELECTRICITY BOARD	JAPAN INTERNATIONAL COOPERATION AGENCY NIPPON KOEI CO., LTD. Consulting Engineer	MASTER PLAN STUDY FOR DEVELOPMENT OF THE TRANSMISSION SYSTEM OF THE CEYLON ELECTRICITY BOARD IN THE DEMOCRATIC SOCIALIST REPUBRIC OF SRI LANKA	TITLE 図A7.2 - 22 位置図及び単線結線図 マタレ変電所

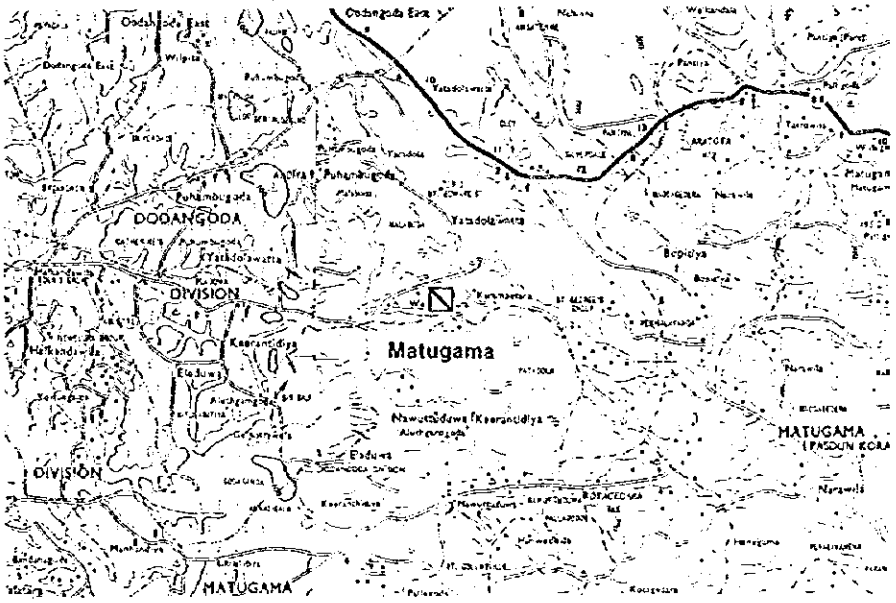

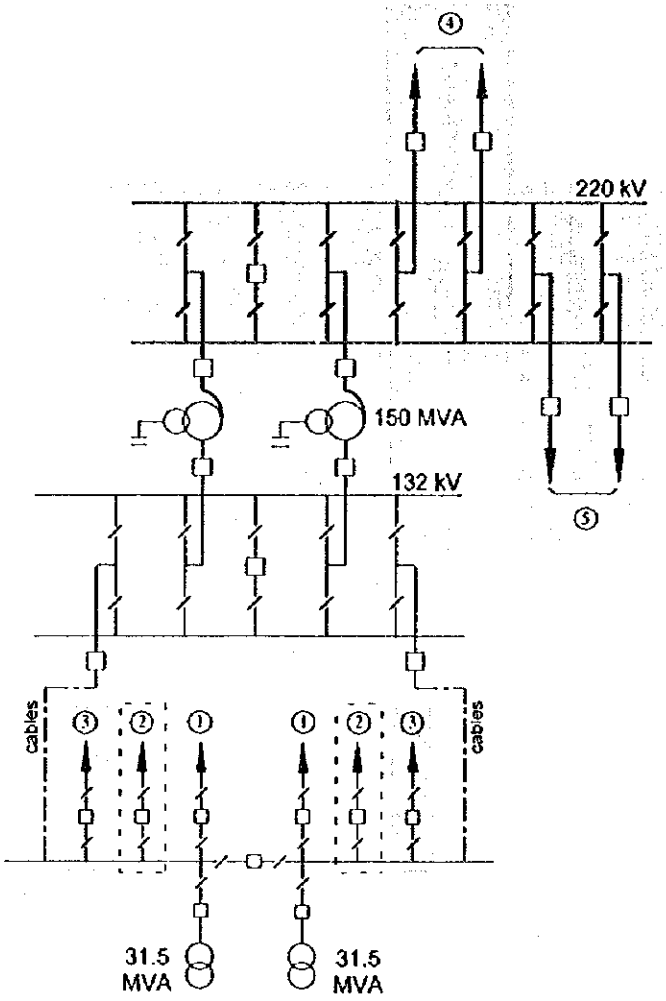

Notes

(I) Transmission Line

① Panadura
② New Galle
③ Kukule
④ Pannipitiya
⑤ Boossa

(II) Proposed Extension Plan

- Not shaded : Existing
- : up to 2000
- : up to 2005
- : up to 2010

(III) Other

(a) Alternative Plan :

The existing and planned facilities up to 2005 are moved to a new 220/132kV substation completely for easy operation.

CEYLON ELECTRICITY BOARD	JAPAN INTERNATIONAL COOPERATION AGENCY NIPPON KOEI CO., LTD. Consulting Engineer	MASTER PLAN STUDY FOR DEVELOPMENT OF THE TRANSMISSION SYSTEM OF THE CEYLON ELECTRICITY BOARD IN THE DEMOCRATIC SOCIALIST REPUBRIC OF SRI LANKA	TITLE 図A7.2 - 23 位置図及び単線結線図 マツガマ変電所

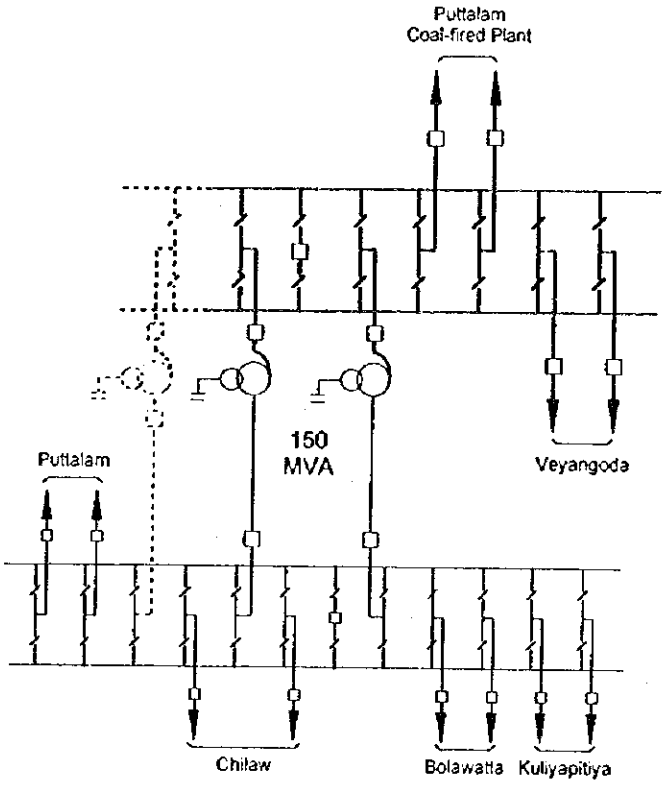

Notes

(I) Proposed Extension Plan

- Not shaded : up to 2005
- Doted line : up to 2015 or after

CEYLON ELECTRICITY BOARD	JAPAN INTERNATIONAL COOPERATION AGENCY NIPPON KOEI CO., LTD. Consulting Engineer	MASTER PLAN STUDY FOR DEVELOPMENT OF THE TRANSMISSION SYSTEM OF THE CEYLON ELECTRICITY BOARD IN THE DEMOCRATIC SOCIALIST REPUBRIC OF SRI LANKA	TITLE 図A7.2 - 24 位置図及び単線結線図 新チロウ変電所

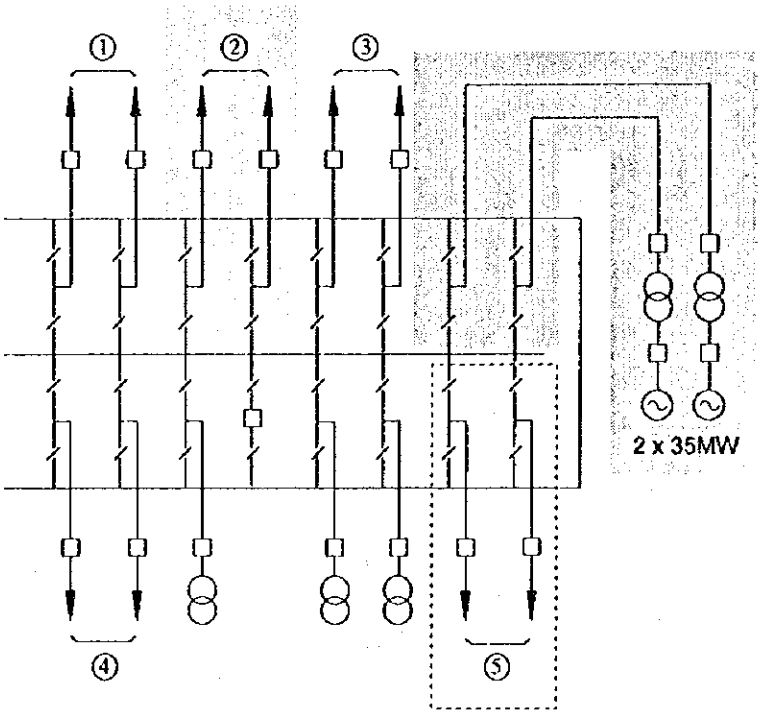

Notes

(I) Transmission Line

① Deniyaya Line
② Matara Line
③ Galle Line
④ Matugama Line
⑤ Boossa Line

(II) Proposed Extension Plan

- Not shaded : up to 2000
- : up to 2005
- : up to 2010
- : by another project

CEYLON ELECTRICITY BOARD	JAPAN INTERNATIONAL COOPERATION AGENCY NIPPON KOEI CO., LTD. Consulting Engineer	MASTER PLAN STUDY FOR DEVELOPMENT OF THE TRANSMISSION SYSTEM OF THE CEYLON ELECTRICITY BOARD IN THE DEMOCRATIC SOCIALIST REPUBRIC OF SRI LANKA	TITLE 図A7.2 - 25 位置図及び単線結線図 新ゴール変電所

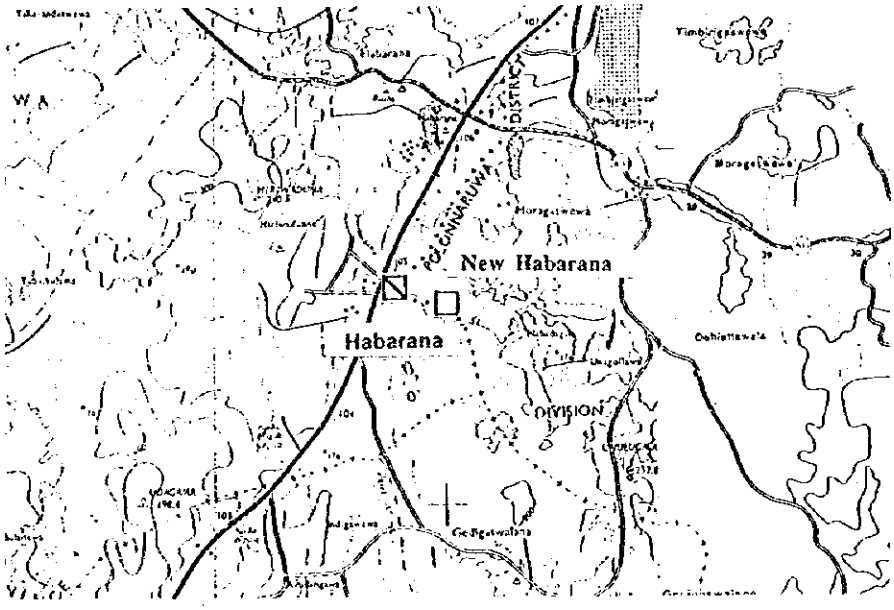

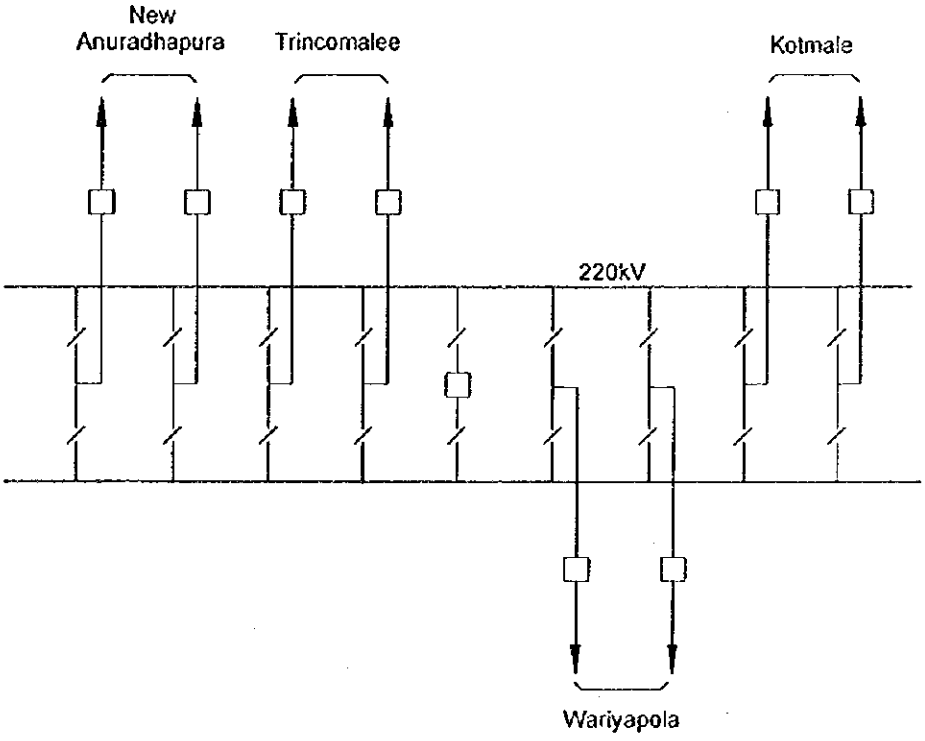

Notes

(1) Proposed Extension Plan

- Not shaded : up to 2010

CEYLON ELECTRICITY BOARD	JAPAN INTERNATIONAL COOPERATION AGENCY NIPPON KOEI CO., LTD. Consulting Engineer	MASTER PLAN STUDY FOR DEVELOPMENT OF THE TRANSMISSION SYSTEM OF THE CEYLON ELECTRICITY BOARD IN THE DEMOCRATIC SOCIALIST REPUBRIC OF SRI LANKA	TITLE 図A7.2 - 26 位置図及び単線結線図 新ハバラナ開閉所

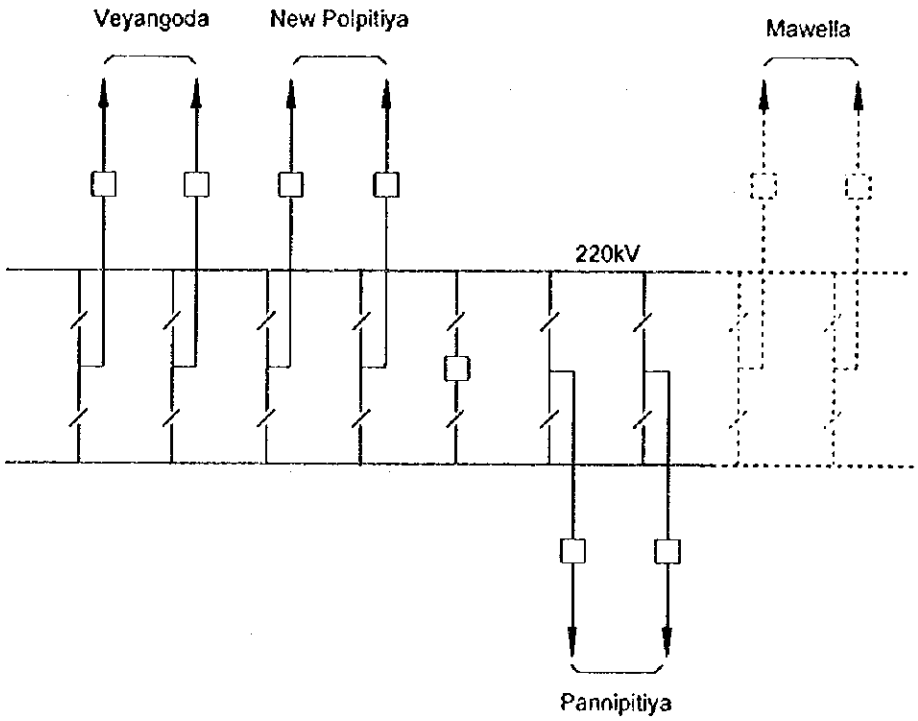

Notes

(I) Proposed Extension Plan

- Not shaded : up to 2010
- Dotted line : up to 2015

CEYLON ELECTRICITY BOARD	JAPAN INTERNATIONAL COOPERATION AGENCY NIPPON KOEI CO., LTD. Consulting Engineer	MASTER PLAN STUDY FOR DEVELOPMENT OF THE TRANSMISSION SYSTEM OF THE CEYLON ELECTRICITY BOARD IN THE DEMOCRATIC SOCIALIST REPUBRIC OF SRI LANKA	TITLE 図A7.2 - 27 位置図及び単線結線図 _新パドゥッカ開閉所

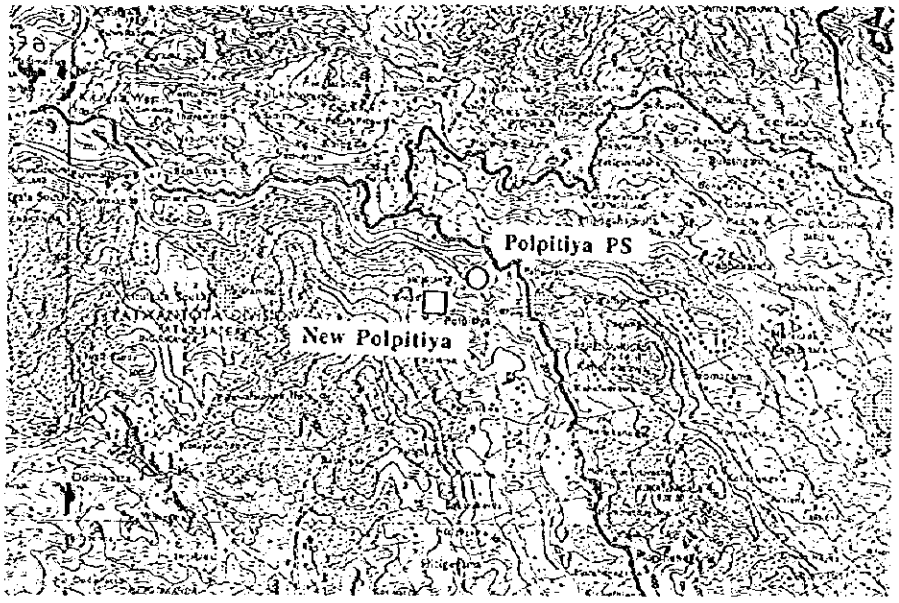

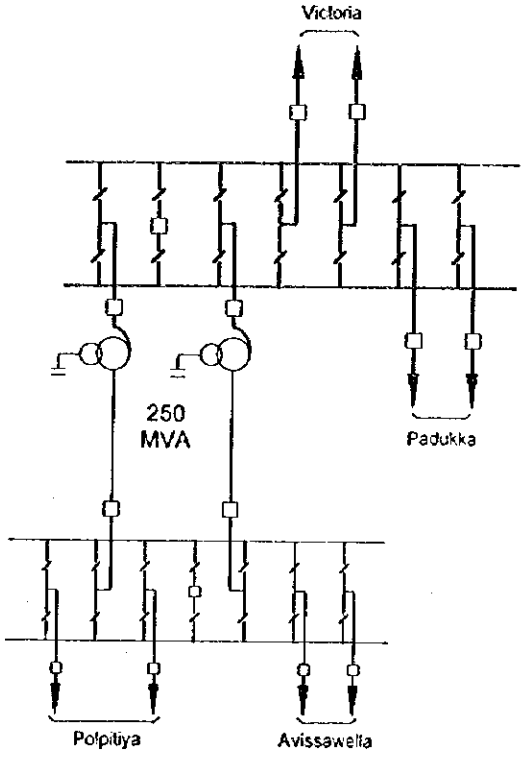

Notes (I) Proposed Extension Plan
- No shaded : up to 2010

CEYLON ELECTRICITY BOARD	JAPAN INTERNATIONAL COOPERATION AGENCY NIPPON KOEI CO., LTD. Consulting Engineer	MASTER PLAN STUDY FOR DEVELOPMENT OF THE TRANSMISSION SYSTEM OF THE CEYLON ELECTRICITY BOARD IN THE DEMOCRATIC SOCIALIST REPUBRIC OF SRI LANKA	TITLE 図A7.2 - 28 位置図及び単線結線図 新ポルピティヤ開閉所

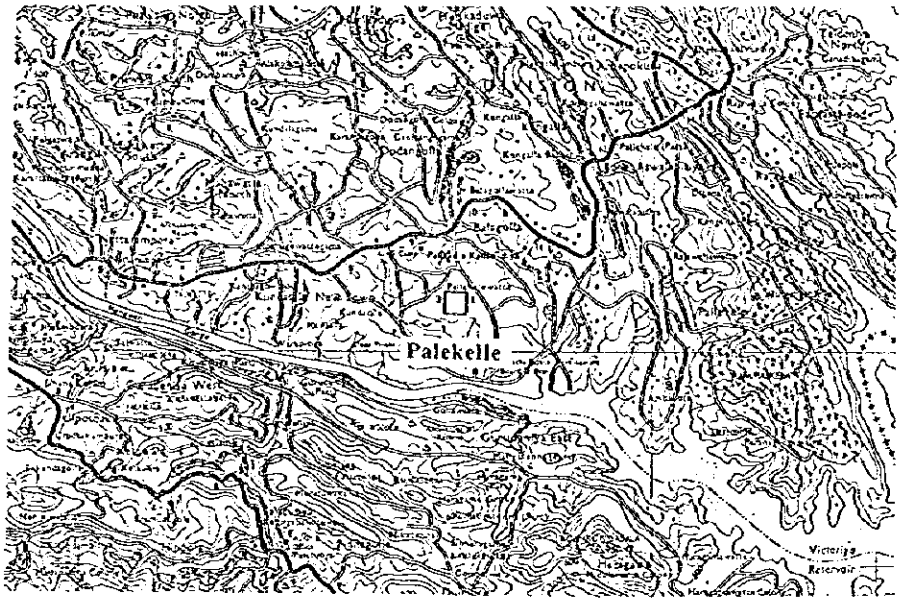

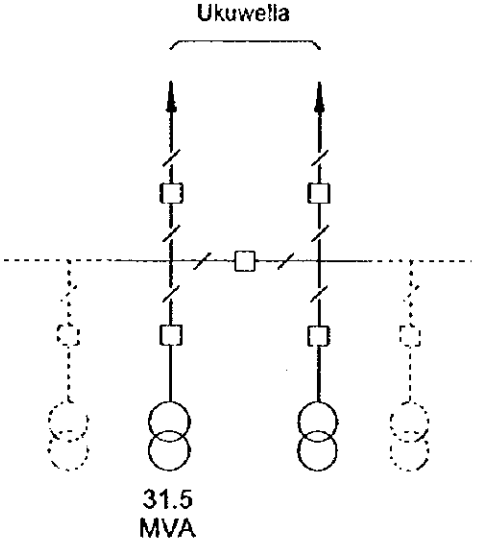

Notes

(I) Proposed Extension Plan

- Not shaded : up to 2005
- Doted line : up to 2015 or after

CEYLON ELECTRICITY BOARD	JAPAN INTERNATIONAL COOPERATION AGENCY NIPPON KOEI CO., LTD. Consulting Engineer	MASTER PLAN STUDY FOR DEVELOPMENT OF THE TRANSMISSION SYSTEM OF THE CEYLON ELECTRICITY BOARD IN THE DEMOCRATIC SOCIALIST REPUBRIC OF SRI LANKA	TITLE 図A7.2 - 29 位置図及び単線結線図 パレケレ変電所

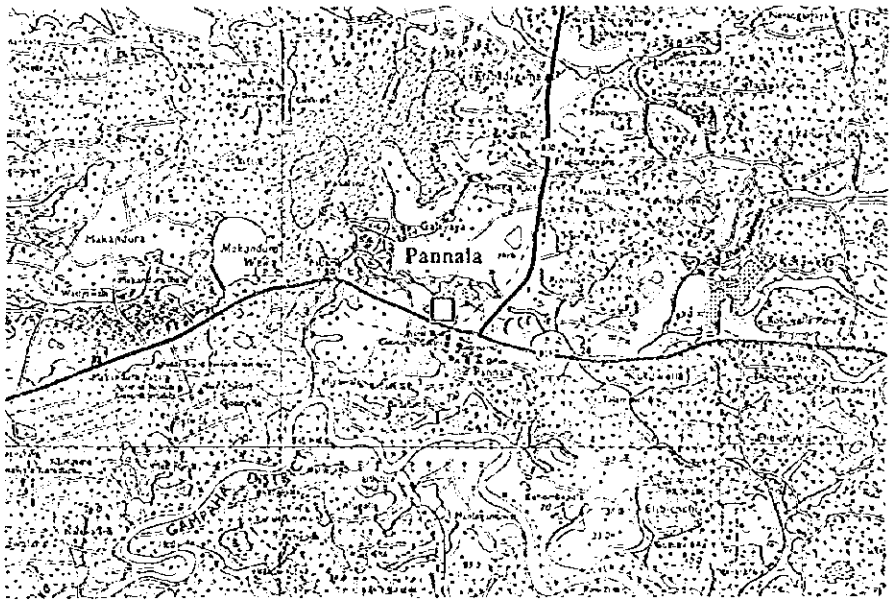

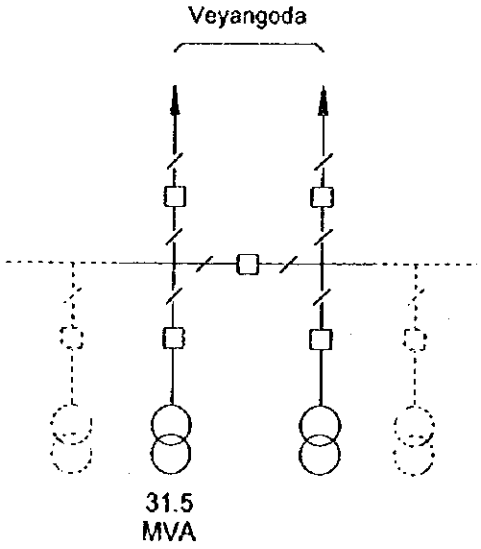

Notes

(I) Proposed Extension Plan

- Not shaded : up to 2010
- Doted line : up to 2015 or after

(II) Others

(a) T/L bays at Veyangoda for Kotugoda line are available.

CEYLON ELECTRICITY BOARD	JAPAN INTERNATIONAL COOPERATION AGENCY NIPPON KOEI CO., LTD. Consulting Engineer	MASTER PLAN STUDY FOR DEVELOPMENT OF THE TRANSMISSION SYSTEM OF THE CEYLON ELECTRICITY BOARD IN THE DEMOCRATIC SOCIALIST REPUBRIC OF SRI LANKA	TITLE 図A7.2 - 30 位置図及び単線結線図 パナラ変電所

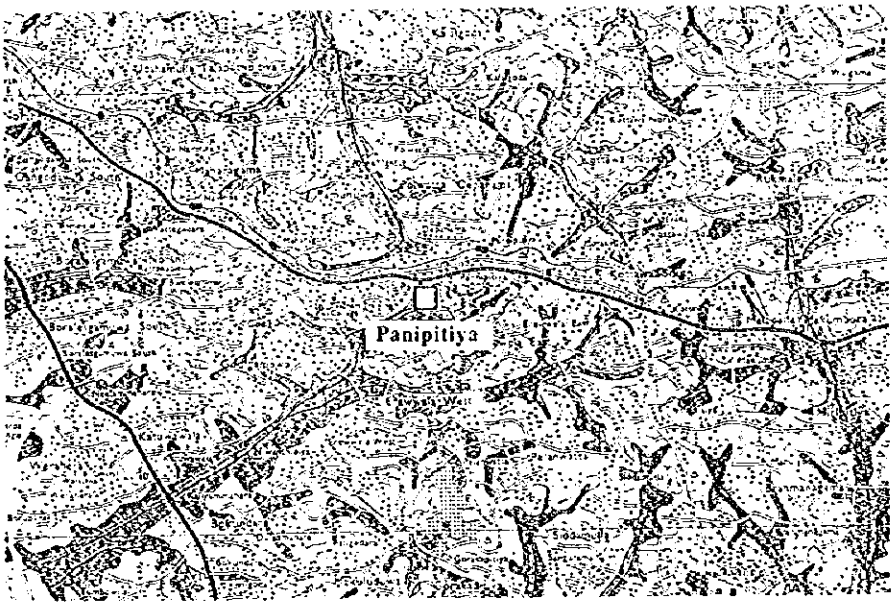

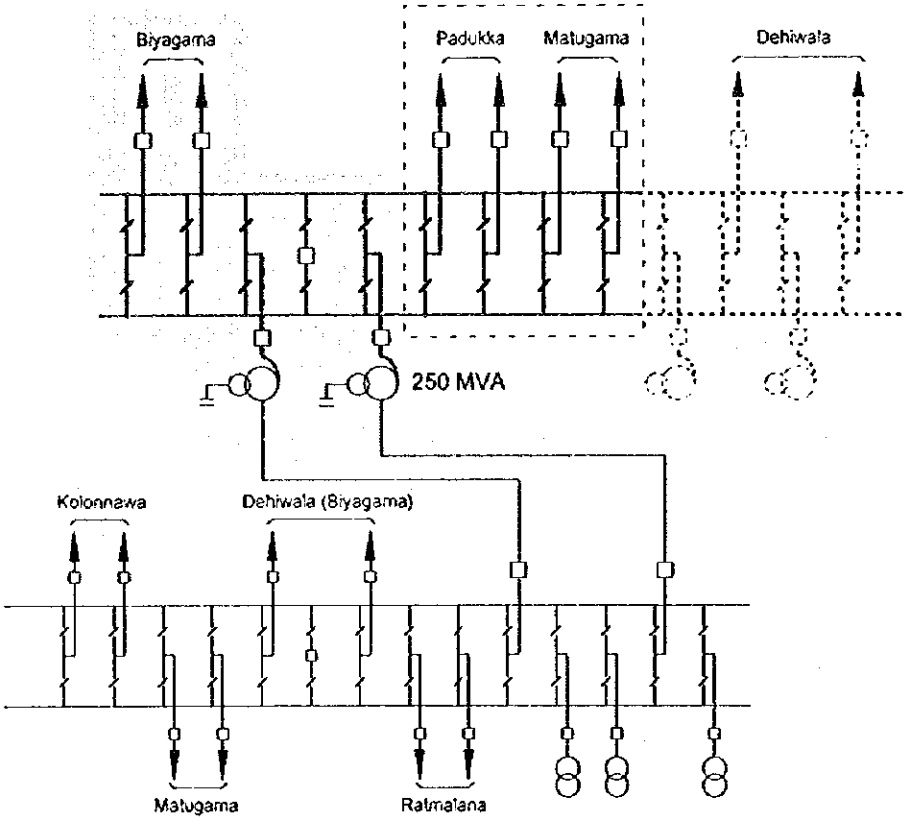

Notes

(I) Proposed Extension Plan

- Not shaded : existing
- : up to 2000
- : up to 2010
- Doted line : up to 2015 or after

(II) Others

(a) Existing 132kV transformers and 33kV switchgears shall be moved when upgraded to 220kV.

(b) Existing 132kV Biyagama line bay is available for Dehiwala line.

CEYLON ELECTRICITY BOARD	JAPAN INTERNATIONAL COOPERATION AGENCY NIPPON KOEI CO., LTD. Consulting Engineer	MASTER PLAN STUDY FOR DEVELOPMENT OF THE TRANSMISSION SYSTEM OF THE CEYLON ELECTRICITY BOARD IN THE DEMOCRATIC SOCIALIST REPUBRIC OF SRI LANKA	TITLE 図A7.2・31 位置図及び単線結線図 パニピティヤ変電所

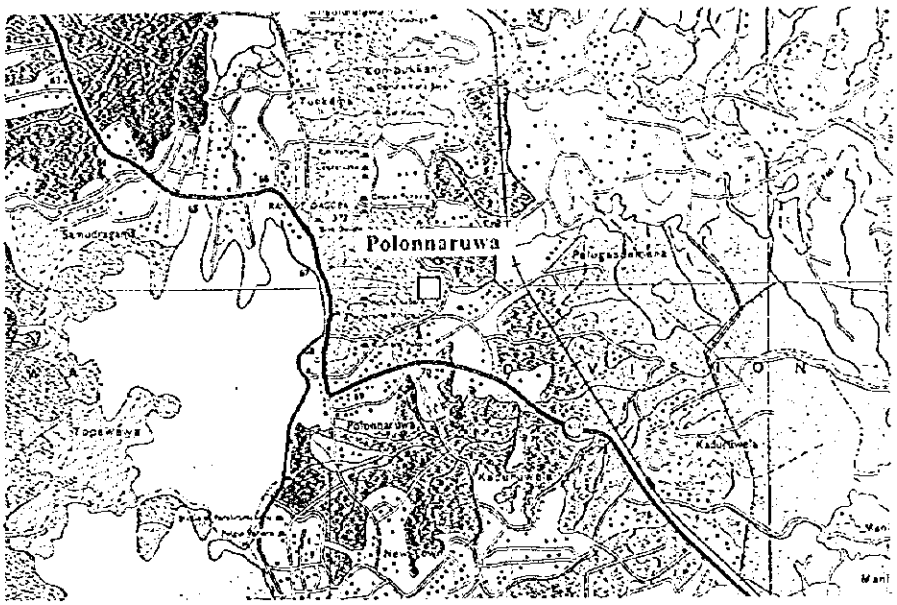

Habarana - Valaichchenai Line
(Single Pai - connection)

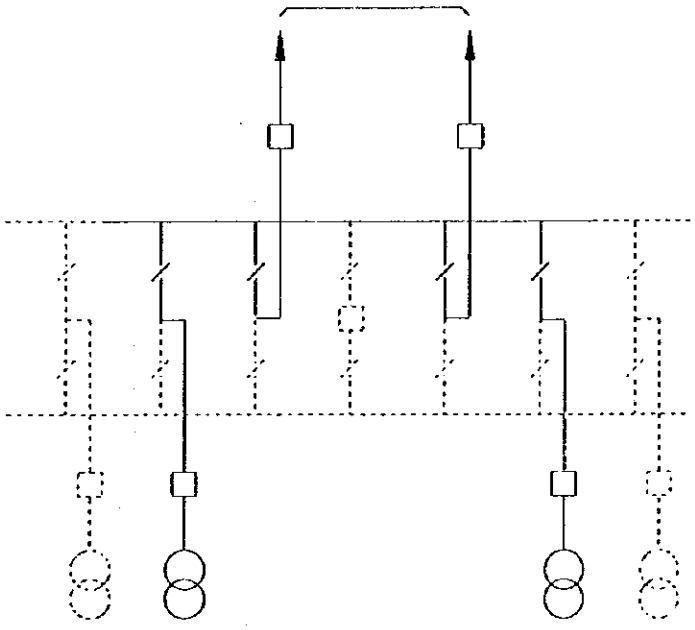

Notes

(I) Proposed Extension Plan

- Not shaded : up to 2005
- Doted line : up to 2010 or after

(II) Others

(a) Plesently used transformers at Kurunegala are available.

CEYLON ELECTRICITY BOARD	JAPAN INTERNATIONAL COOPERATION AGENCY NIPPON KOEI CO., LTD. Consulting Engineer	MASTER PLAN STUDY FOR DEVELOPMENT OF THE TRANSMISSION SYSTEM OF THE CEYLON ELECTRICITY BOARD IN THE DEMOCRATIC SOCIALIST REPUBRIC OF SRI LANKA	TITLE 図A7.2 - 32 位置図及び単線結線図 ポロナルワ変電所

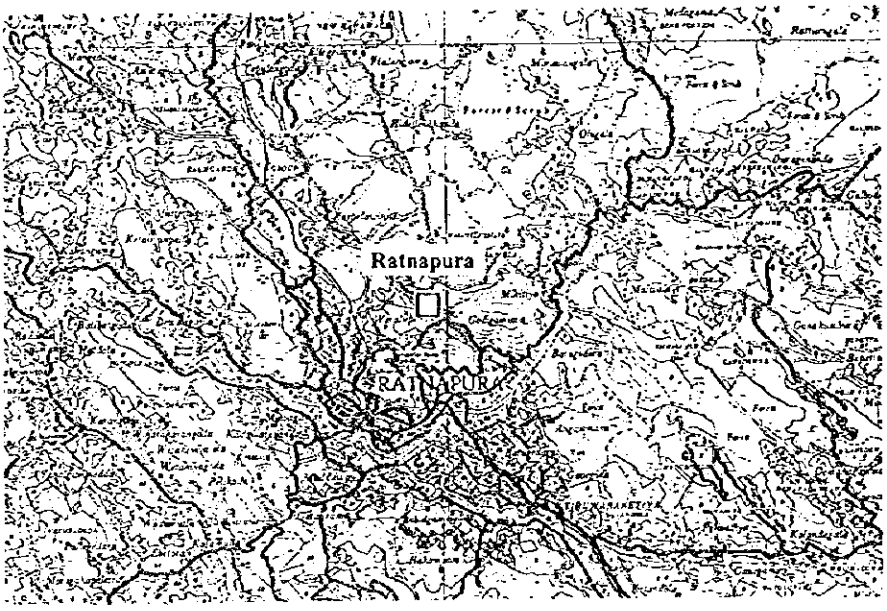

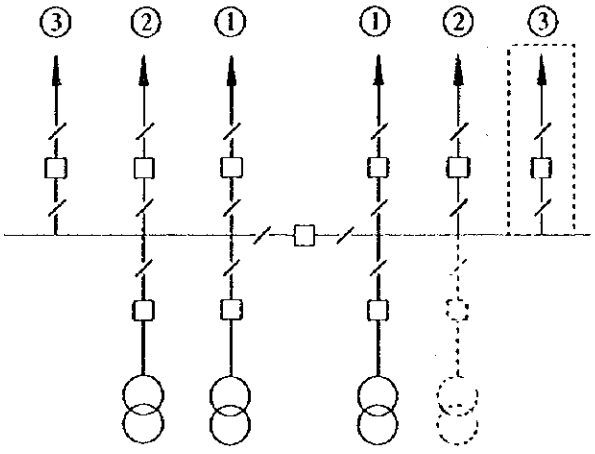

Notes

(I) Transmission Line

① Balangoda

② Kukule

③ Eheliyagoda

(II) Proposed Extension Plan

- Not shaded : up to 2000
- : up to 2005
- : up to 2010
- Doted line : up to 2015 or after

(III) Others

Bus arrengement is subject to the available land space

CEYLON ELECTRICITY BOARD	JAPAN INTERNATIONAL COOPERATION AGENCY NIPPON KOEI CO., LTD. Consulting Engineer	MASTER PLAN STUDY FOR DEVELOPMENT OF THE TRANSMISSION SYSTEM OF THE CEYLON ELECTRICITY BOARD IN THE DEMOCRATIC SOCIALIST REPUBRIC OF SRI LANKA	TITLE 図A7.2 - 33 位置図及び単線結線図 ラトナプラ変電所

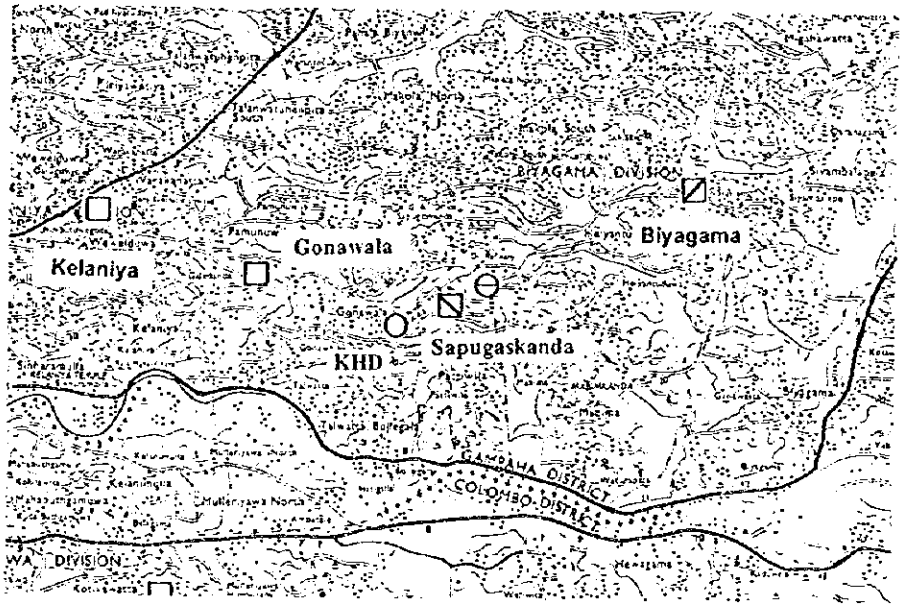

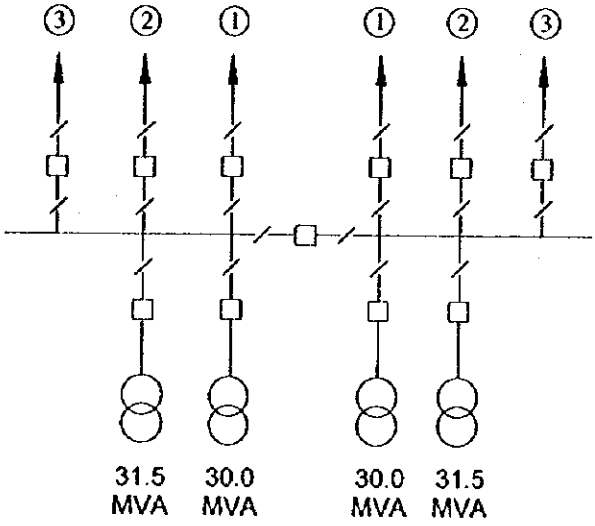

Notes

(I) Transmission Line

① Kelaniya

② Sapugaskanda PS

③ KHD

(II) Proposed Extension Plan

- Not shaded : Existing & under construction
- : up to 2000

CEYLON ELECTRICITY BOARD	JAPAN INTERNATIONAL COOPERATION AGENCY NIPPON KOEI CO., LTD. Consulting Engineer	MASTER PLAN STUDY FOR DEVELOPMENT OF THE TRANSMISSION SYSTEM OF THE CEYLON ELECTRICITY BOARD IN THE DEMOCRATIC SOCIALIST REPUBRIC OF SRI LANKA	TITLE 図A7.2 - 34 位置図及び単線結線図 サプガスカンダ変電所

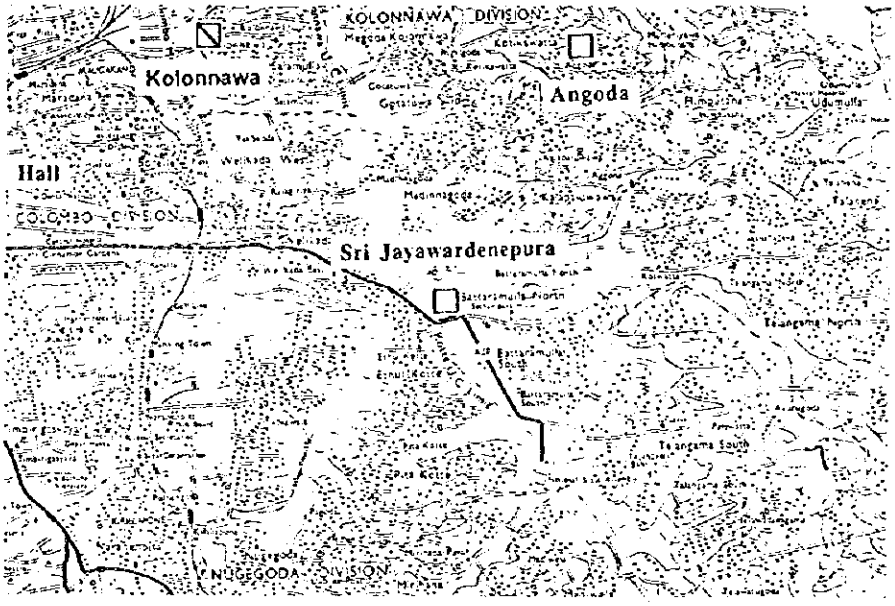

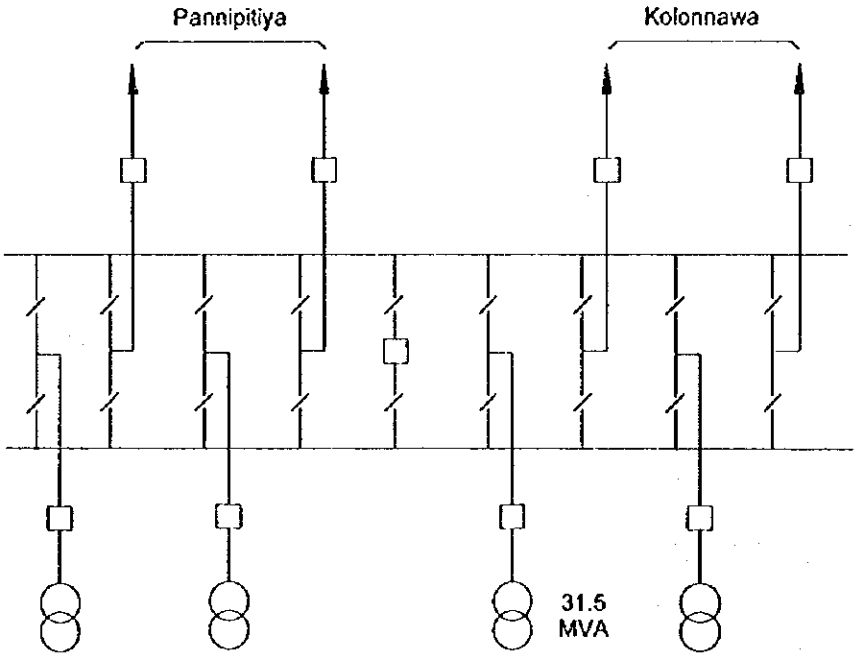

Notes

(I) Proposed Extension Plan

- Not shaded : up to 2000
- [illegible] : up to 2005

CEYLON ELECTRICITY BOARD	JAPAN INTERNATIONAL COOPERATION AGENCY NIPPON KOEI CO., LTD. Consulting Engineer	MASTER PLAN STUDY FOR DEVELOPMENT OF THE TRANSMISSION SYSTEM OF THE CEYLON ELECTRICITY BOARD IN THE DEMOCRATIC SOCIALIST REPUBRIC OF SRI LANKA	TITLE 図A7.2 - 35 位置図及び単線結線図 スリジャヤプラ変電所

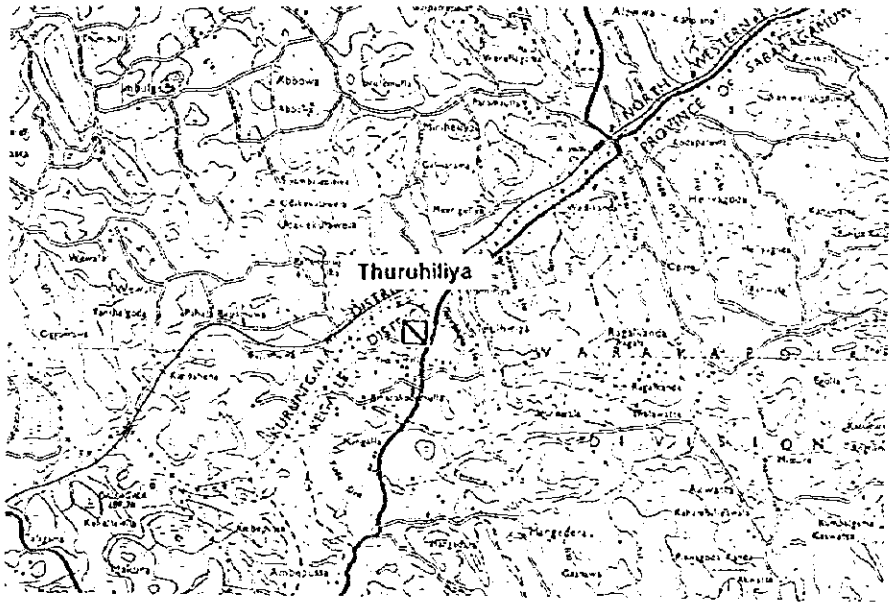

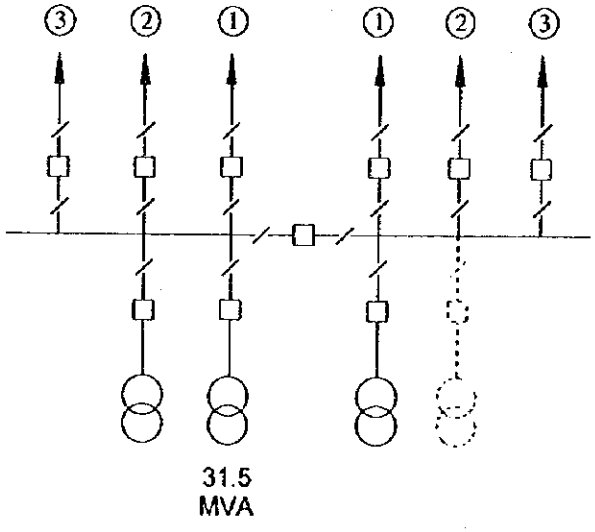

Notes

(I) Transmission Line

① Aguruwella

② Veyangoda

③ Kegalle

(II) Proposed Extension Plan

- Not shaded : Existing & Committed
- : up to 2010
- Doted line : up to 2015 or after

(III) Others

(a) Bus section circuit breaker is not presently provided.

CEYLON ELECTRICITY BOARD	JAPAN INTERNATIONAL COOPERATION AGENCY NIPPON KOEI CO., LTD. Consulting Engineer	MASTER PLAN STUDY FOR DEVELOPMENT OF THE TRANSMISSION SYSTEM OF THE CEYLON ELECTRICITY BOARD IN THE DEMOCRATIC SOCIALIST REPUBRIC OF SRI LANKA	TITLE 図A7.2・36 位置図及び単線結線図 スルヒリヤ変電所

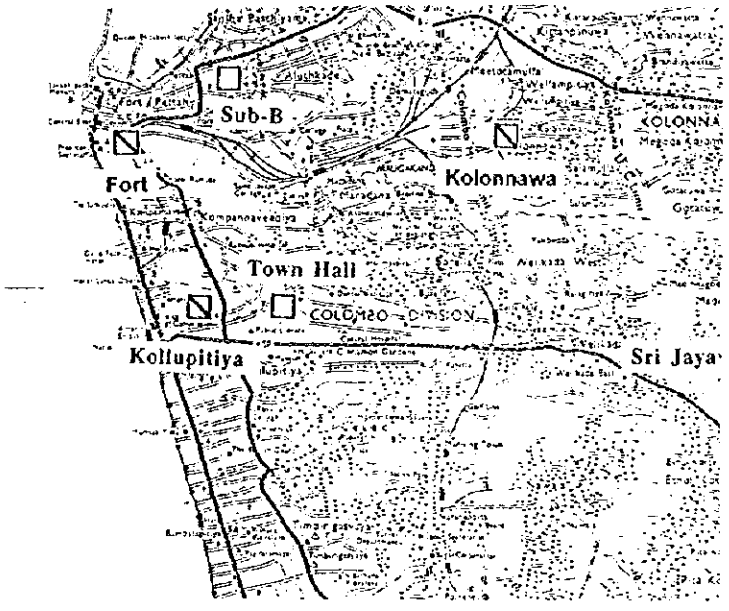

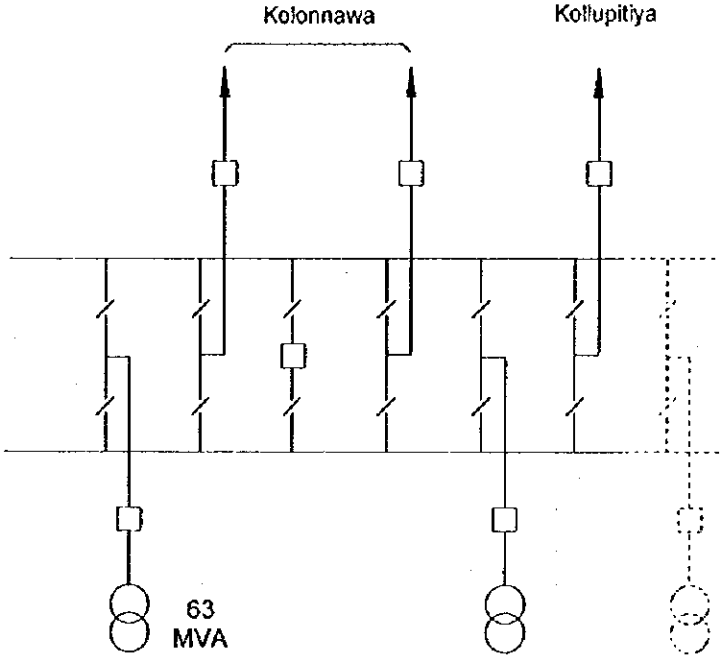

Notes

(I) Proposed Extension Plan

- Not shaded : up to 2010
- Dotted line : up to 2015 or after

(II) Others

(a) A transformer bay for future extension shall be provided when newly constructed.

CEYLON ELECTRICITY BOARD	JAPAN INTERNATIONAL COOPERATION AGENCY NIPPON KOEI CO., LTD. Consulting Engineer	MASTER PLAN STUDY FOR DEVELOPMENT OF THE TRANSMISSION SYSTEM OF THE CEYLON ELECTRICITY BOARD IN THE DEMOCRATIC SOCIALIST REPUBRIC OF SRI LANKA	TITLE 図A7.2 - 37 位置図及び単線結線図 タウンホール変電所

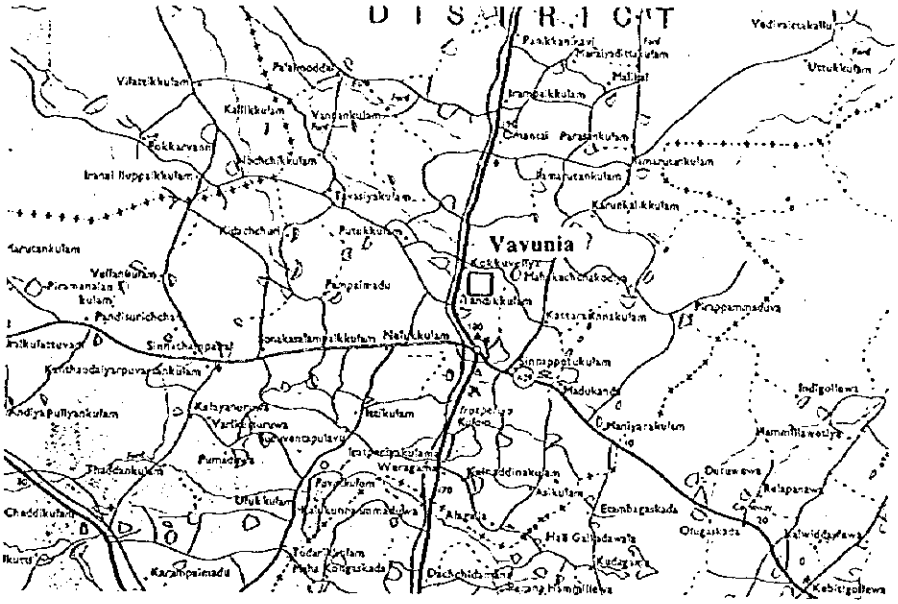

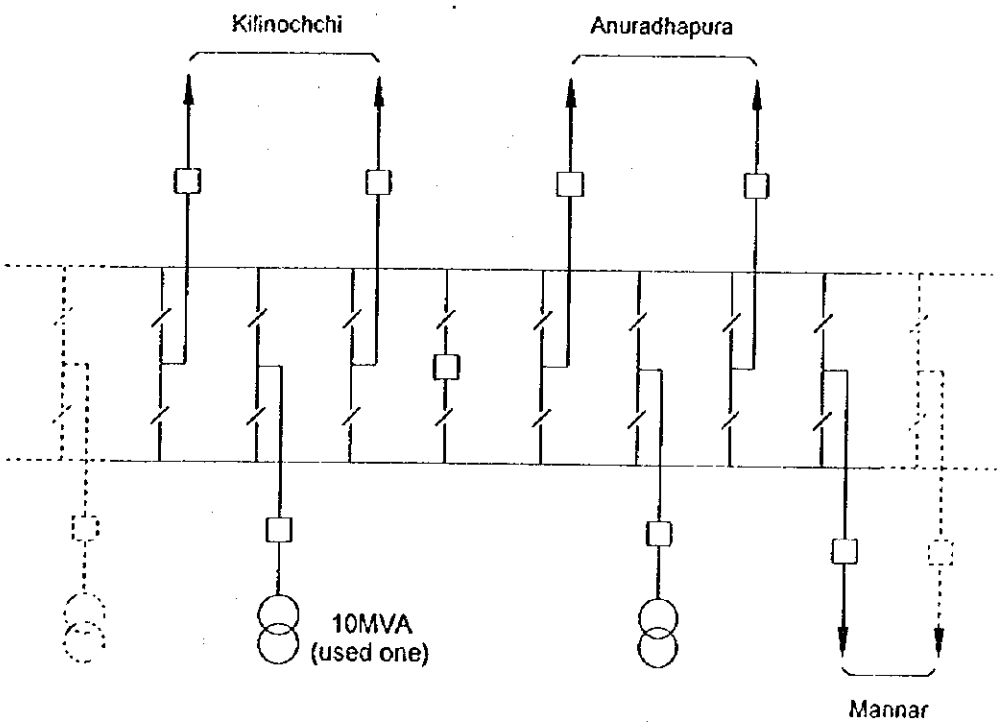

Notes

(I) Proposed Extension Plan

- Not shaded : up to 2005
- : up to 2010
- Dotted line : up to 2015 or after

CEYLON ELECTRICITY BOARD	JAPAN INTERNATIONAL COOPERATION AGENCY NIPPON KOEI CO., LTD. Consulting Engineer	MASTER PLAN STUDY FOR DEVELOPMENT OF THE TRANSMISSION SYSTEM OF THE CEYLON ELECTRICITY BOARD IN THE DEMOCRATIC SOCIALIST REPUBRIC OF SRI LANKA	TITLE 図A7.2 - 38 位置図及び単線結線図 バブニア変電所

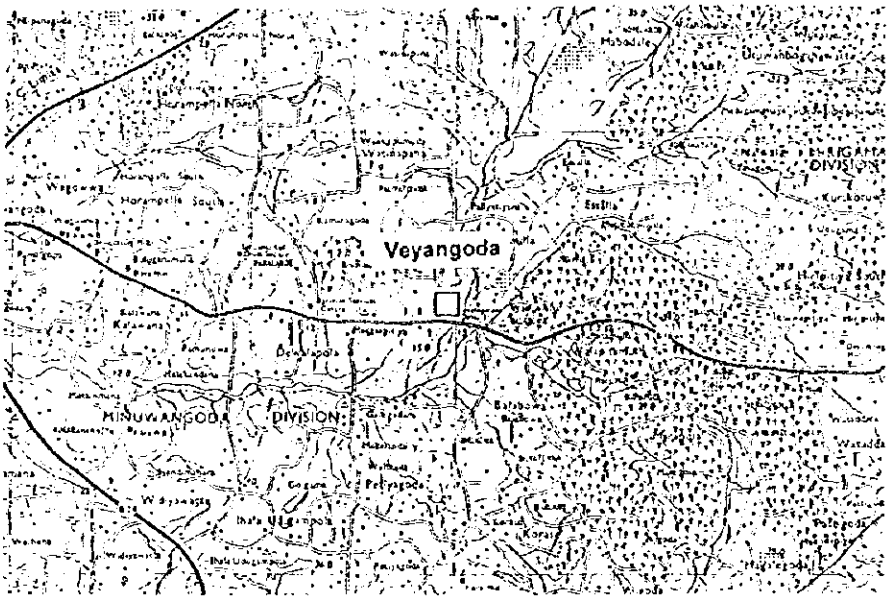

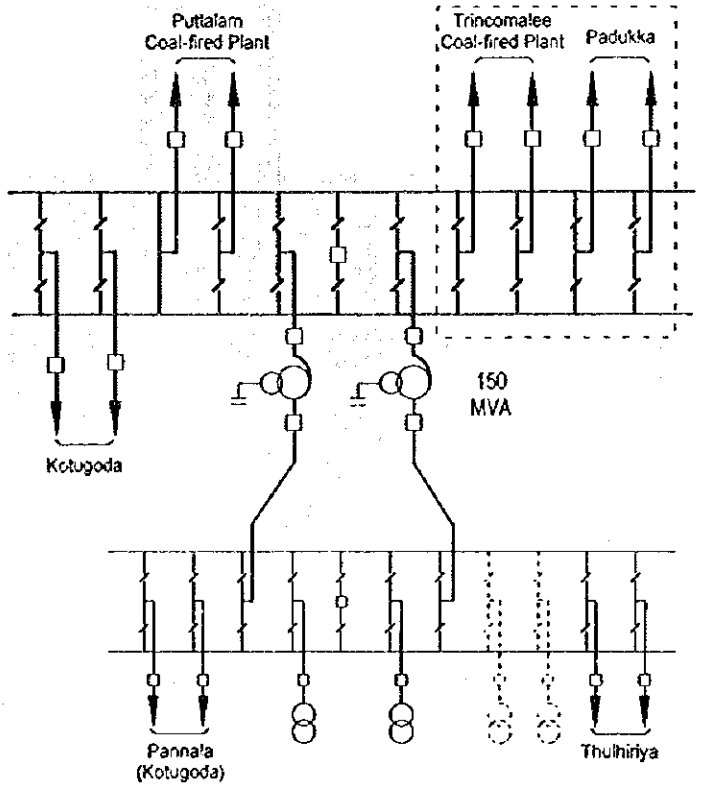

Notes

(I) Proposed Extension Plan

- Not shaded : under SPSEP (ADB)
- [illegible] : up to 2005
- [illegible] : up to 2010
- Doted line : up to 2015 or after

CEYLON ELECTRICITY BOARD	JAPAN INTERNATIONAL COOPERATION AGENCY NIPPON KOEI CO., LTD. Consulting Engineer	MASTER PLAN STUDY FOR DEVELOPMENT OF THE TRANSMISSION SYSTEM OF THE CEYLON ELECTRICITY BOARD IN THE DEMOCRATIC SOCIALIST REPUBRIC OF SRI LANKA	TITLE 図A7.2 - 39 位置図及び単線結線図 ベヤンゴダ変電所

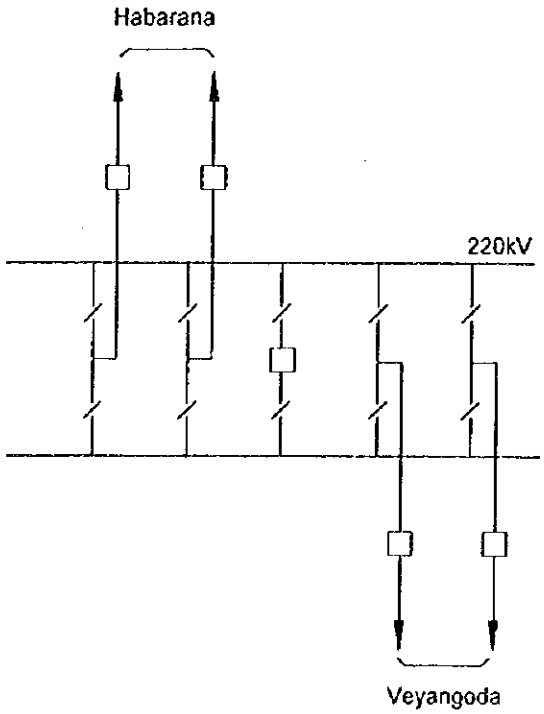

Notes

(I) Proposed Extension Plan

- Not shaded : up to 2010

CEYLON ELECTRICITY BOARD	JAPAN INTERNATIONAL COOPERATION AGENCY NIPPON KOEI CO., LTD. Consulting Engineer	MASTER PLAN STUDY FOR DEVELOPMENT OF THE TRANSMISSION SYSTEM OF THE CEYLON ELECTRICITY BOARD IN THE DEMOCRATIC SOCIALIST REPUBRIC OF SRI LANKA	TITLE 図A7.2 - 40 位置図及び単線結線図 ワリヤポラ開閉所