Working Division:

Description	Calculation Details	Unit	Quantity	Remarks
.3 /15	Gabion mattress, t = 500 mm			
	(Wing wall part)			
	1. Ø600			
	(0.8 + 0.3) × 5.0 × 0.5 = 2.75 m³			
	2.75 × 2 × 30 = 165.0	m³	182.60	
	2.75 × 0.2 × 32 = 17.6			
	2. Ø800			
	(1.1 + 0.3) × 5.0 × 0.5 = 3.75 m³			
	3.75 × 2 × 3 = 19.5	m³	19.5	
	3. Ø1,000			
	(1.2 + 0.3) × 5.0 × 0.5 = 3.75 m³			
	3.75 × 2 × 2 = 15.0	m³	15.0	
	4. 1.2 × 1.2 m			
	(3.434 × 2 + 3.3) × 5.0 × 0.5 = 20.42 m³			
	5. 1.5 × 1.5 m			
	(3.154 × 2 + 3.45) × 5.0 × 0.5 = 24.395 m³			

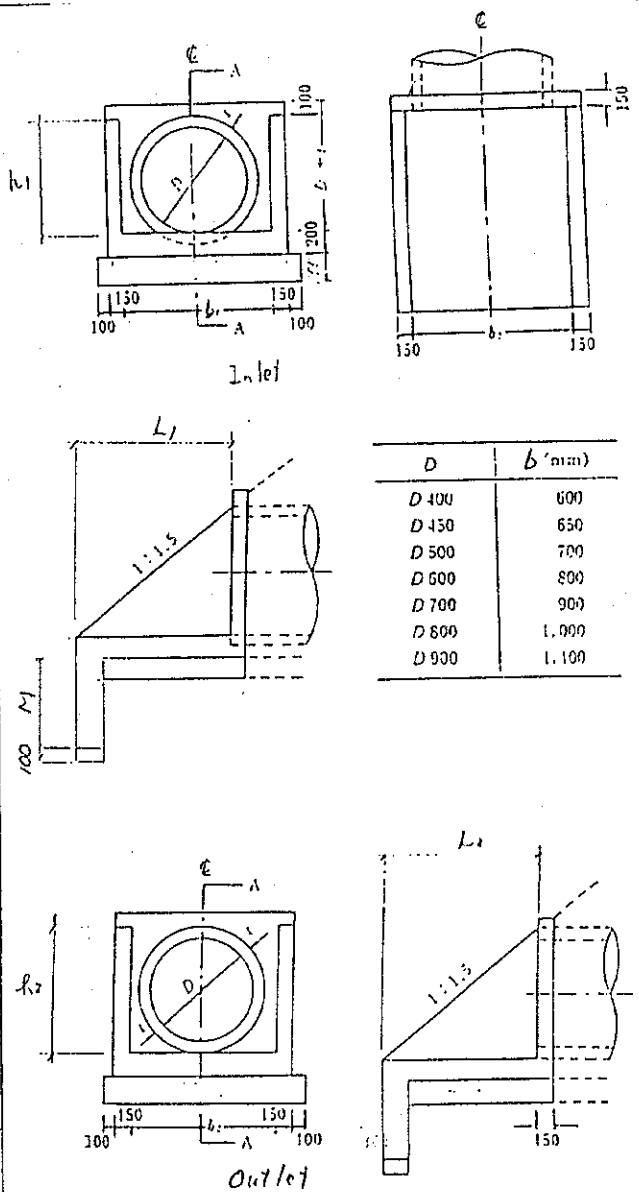

D	b (mm)
D 400	600
D 450	650
D 500	700
D 600	800
D 700	900
D 800	1,000
D 900	1,100

6-649

Working Division: 72. EL GUASMO.

Description	Calculation Details	Unit	Quantity	Remarks
11.2	Box culverts			
105	Open-cut excavation	m^3	315.18	
106	Backfill with selected material	m^3	68.39	
107	Free draining backfill	m^3	109.424	
108	Gravel bedding	m^3	7.985	

6-280

Working Division: 7 EL GUASMO ACCESS ROAD

Description	Calculation Details	Unit	Quantity	Remarks
3	CULVERT AND DRAINAGE WORKS			
101	Open-cut excavation, all classes	m^3	589.062	
	1. Pipe culvert 193.00			
	2. Box culvert			
	3. Drain pipe 188.750			
	4. Catch basin 207.312			
	Total 589.062			
102	Backfill with selected material	m^3	271.60	
	1. Pipe culvert 87.92			
	2. Box culvert			
	3. Catch basin 183.68			
	Total 271.6			
103	Crushed stone bedding	m^3	36.79	→ 37
	1. Pipe culvert			

6-48

Working Division:

Description	Calculation Details	Unit	Quantity	Remarks
.3	CULVERT AND DRAINAGE WORKS			
104	Reinforced concrete pipe, D.600 mm Culvert : 81.0 m, For ditch 98.0 m	m	179.0	→ 179
105	Reinforced concrete pipe, D.800 mm	m	16.10	→ 16
106	Reinforced concrete pipe D.1,000 mm	m	0.0	→ 0
107	P.V.C. perforated drain pipe D.200 mm	m	786.460	→ 787
108	Free drainage material for subdrain	m^3	164.056	→ 164
109	Concrete, class E. for pipe culvert and wing walls	m^3	97.517	
	1. Pipe culvert 72.54			
	2. Box culvert			
	3. Wing wall for pipe culvert 11.101			
	4. Wing wall for box culvert 29.196			
	Total 97.517			
110	Concrete, class F. for side ditch and catch basin	m^3	278.345	→ 279
	1. Side ditch 265.311			
	2. catch basin 13.034			
	Total 278.345			

6-282

Working Division:

Description	Calculation Details	Unit	Quantity	Remarks
.3	CULVERT AND DRAINAGE WORKS			
111	Concrete, class H, for levelling concrete	m^3	6.616	
	1. Culvert			
	2. Wing wall 5.384			
	3. Catch basin 1.232			
	Total 6.616			
112	Formwork, F1 finish, for concrete of Items 109 and 110	m^2	417.905	
	1. culvert 234.53			
	2. Wing wall 110.610			
	3. Catch basin 72.765			
	Total 417.905			
113	Formwork, F3 finish, for concrete of Items 109 and 110	m^2	2311.828	
	1. Culvert			
	2. Wing wall 61.303			
	3. Catch basin 44.219			
	4. Drain ditch 2205.806			
	Total 2311.328			

Working Division: 7. EL GUASMO ACCESS ROAD

Description	Calculation Details	Unit	Quantity	Remarks
7.3.	CULVERT AND DRAINAGE WORKS			
1.4	Reinforcing bars for concrete works	ton	7	
	1. Culvert 3039 "			
	2. Wing wall 3983.76			
	3. Catch basin 1032.72			
	Total 7055.48			
1.5	Gabion mattress, t=500 mm	m^3	91.77	— 92
1.6	Joint filler, t=10 mm	m^2		
1.7	Bituminous coating for contraction joint	m^2		

Working Division: 4

Description	Calculation Details	Unit	Quantity	Remarks
H.4	CONCRETE WORKS			
103	Concrete class E for box culverts	m^3	209.58	
104	Concrete class H for levelling concrete	m^3	15.97	
106	Formwork F1 finish for concrete item 103, 104	m^2	289.43	
108	Formwork F3 finish for concrete item 103	m^2	320.92	
109	Reinforcing bars for concrete works	Ton	17	
110	Joint filler for culvert	m^2	12.36	
112	Bituminous coating for contraction joint	m^2	8.24	

7 EL GUASMO

Sr. No	St No.	Q m3/s	I	Entrance El m	Exit El m	Road El m	Culvert Length m	Type	Soil Thickness m
D-1	0+227.50	0.44	19.0%	143.700	138.000	149.637	30.000	D=600mm 360	8.187
D-2	0+477.00	0.78	28.3%	145.700	137.200	149.416	30.000	D=600mm 360	7.366
D-3	0+856.40	2.33	5.0%	147.300	146.495	151.136	16.100	D=800mm 180	3.438
D-4	1+000.00	0.78	22.4%	160.700	156.000	164.388	21.000	D=600mm 360	5.438
D-5	1+482.62	17.25	1.0%	118.600	118.101	133.646	49.900	2500mm x 2000mm II	13.295
							147.000		

		(m)	(nos)
ø 600	360	81	3
ø 800	180	16.1	1
2.5x2	II	49.9	1.

6-296

6. El Guasmo

		Length	Pipe Length	Open Cut Excavation (12.3/01)		Backfill (12.3/02)		Crushed Stone Bedding (12.3 /03)		Pipe D=600 (12.3/04)	Pipe D=800 (12.3/05)	Pipe D=1000 (12.3/06)	Concrete Class E (12.3/09)		Form Work F1 (12.3/12)		Reinforced Bar (12.3/14)	
		Unit (m)	Unit (m)	Unit (m3)	Total	Unit (m3)	Total	Unit (m3)	Total	Unit (m)	Unit (m)	Unit (m)	Unit (m3)	Total	Unit (m2)	Total	Unit (kg)	Total
D=600mm	90	98.0	179.0	0.83	81.22	0.43	42.20	0.14	13.97				0.16	15.32	0.52	50.96	0.00	0.00
	180	0.0		0.93	0.00	0.42	0.00	0.17	0.00				0.26	0.00	1.00	0.00	0.00	0.00
	Fix	81.0		1.09	87.88	0.45	36.65	0.24	19.44				0.62	49.83	2.00	162.00	42.98	3,481.70
D=800mm	90	0.0	16.1	1.28	0.00	0.58	0.00	0.17	0.00				0.26	0.00	0.68	0.00	0.00	0.00
	180	16.1		1.48	23.90	0.56	9.07	0.21	3.38				0.46	7.39	1.34	21.57	0.00	0.00
	Fix	0.0		1.72	0.00	0.60	0.00	0.31	0.00				1.11	0.00	2.68	0.00	73.53	0.00
D=1000mm	90	0.0	0.0	1.90	0.00	0.73	0.00	0.28	0.00				0.35	0.00	0.76	0.00	0.00	0.00
	180	0.0		2.12	0.00	0.72	0.00	0.33	0.00				0.60	0.00	1.58	0.00	0.00	0.00
	Fix	0.0		2.22	0.00	0.71	0.00	0.36	0.00				1.43	0.00	3.16	0.00	84.55	0.00
Total		195.1			193.00		87.92		36.79	179.00	16.10	0.00		72.54		234.53		3,481.70

6-2a7

		Length	Open Cut Excavation (12.2/07)		Backfill (12.2/06)		Concrete Class E (Item12.4/03)		Concrete Class H (Item12.4/04)		Form Work F1 (Item12.4/06)		Form Work F3 (Item12.4/08)		Reinforced Bar (12.4/09)	
		Unit (m)	Unit (m3)	Total	Unit (m3)	Total	Unit (m3)	Total	Unit (m3)	Total	Unit (m2)	Total	Unit (m2)	Total	Unit (kg)	Total
1200mm x 1200mm	~9.25	0.0	2.42	0.00	0.77	0.00	1.63	0.00	0.19	0.00	3.60	0.00	3.70	0.00	162.91	0.00
1500mm x 1500mm	~9.5	0.0	3.36	0.00	0.96	0.00	2.31	0.00	0.22	0.00	4.30	0.00	4.45	0.00	193.31	0.00
2000mm x 2000mm	~5.75	0.0	4.97	0.00	1.25	0.00	2.94	0.00	0.27	0.00	5.30	0.00	5.95	0.00	232.36	0.00
2000mm x 2000mm	~7.75	0.0	5.18	0.00	1.31	0.00	3.20	0.00	0.27	0.00	5.50	0.00	5.95	0.00	236.02	0.00
2000mm x 2000mm	7.751~	0.0	5.54	0.00	1.37	0.00	3.74	0.00	0.28	0.00	5.70	0.00	5.95	0.00	270.47	0.00
2500mm x 2000mm	3.75~5.75	0.0	5.93	0.00	1.31	0.00	3.61	0.00	0.32	0.00	5.50	0.00	6.43	0.00	317.29	0.00
2500mm x 2000mm	5.751~	49.9	6.32	315.18	1.37	68.39	4.20	209.58 ~~315.18~~	0.32	15.97	5.70	284.43	6.43	320.92	331.62	16,547.84
Total		49.9		315.18		68.39		~~315.18~~ 209.58		15.97		284.43		320.92		16,547.84

LONGITUD DE CUNETAS

CAMINO DE ACCESO: EL GUASMO 0+000 a 1+585.20 Km

	ABSCISAS	IZQUIERDA	DERECHA	LONGITUD
	0+000.00 - 0+005.00 ✓	0.00	0.50	0.50
11.5	0+050.00 - 0+240.00	239.50	0.00	239.50
	0+240.00 - 0+400.00	160.00	0.00	160.00
17.0	0+400.00 - 0+440.00	40.00	40.00	80.00
15.5	0+440.00 - 0+520.00	80.00	0.00	80.00
	0+520.00 - 0+550.00	30.00	30.00	60.00
7.5	0+550.00 - 0+660.00	110.00	110.00	220.00
	0+660.00 - 0+696.53 ✓	36.53	0.00	36.53
	0+696.53 - 0+735.00	38.47	38.47	76.94
	0+735.00 - 0+767.62	32.62	0.00	32.62
7.5	0+767.62 - 0+820.00	52.38	52.38	104.76
	0+820.00 - 0+856.40	36.40	36.40	72.80
	0+856.40 - 0+890.00	33.60	0.00	33.60
	0+890.00 - 1+000.00	110.00	110.00	220.00
	1+000.00 - 1+115.00	115.00	0.00	115.00
	1+115.00 - 1+190.00 ✓	75.00	75.00	150.00
	1+190.00 - 1+240.00	50.00	50.00	100.00
14.0	1+270.00 - 1+370.00	100.00	0.00	100.00
	1+370.00 - 1+400.00	30.00	0.00	30.00
	1+400.00 - 1+440.00 ✓	40.00	40.00	80.00
	1+440.00 - 1+480.00 ✓	0.00	40.00	40.00
25.0	1+530.00 - 1+585.20	55.20	55.20	110.40
			LONG. TOTAL:	2142.65 m

Total length 2142.65

addition. 5x10=50 — 2192.65 m

Catch basin 7 nos.

ø 600 98.0 m.

Drain Pipe Quantities

Access Road Name	Length (m)	Excavation (m3)		P.V.C Pipe D=200mm (m)		Drainage Material (m3)	
		Per meter	Total		Total	Per meter	Total
Conguillo	5,823.120	0.240	1,397.549		5,823.120	0.209	1,214.703
Severno Tramo1	1,535.870	0.240	368.609		1,535.870	0.209	320.382
Severno Tramo2	2,472.920	0.240	593.501		2,472.920	0.209	515.851
Los Cuyuyes	7,324.030	0.240	1,757.767		7,324.030	0.209	1,527.793
Poza Honda	266.710	0.240	64.010		266.710	0.209	55.636
La Seca	2,035.376	0.240	488.490		2,035.376	0.209	424.579
El Guasmo	786.460	0.240	188.750		786.460	0.209	164.056
Cana Dulce	1,200.560	0.240	288.134		1,200.560	0.209	250.437
Membrillo Outlet	30.000	0.240	7.200		30.000	0.209	6.258
Grand Total			5,154.011		21,475.046		4,479.695

Excavation	V=(0.8+0.4)*0.4/2	=0.24
Free Drainage Material	V=0.24-3.14*0.1^2	=0.21

6-229

Working Division:

Description	Calculation Details	Unit	Quantity	Remarks
.3 101	Open-cut excavation, all classes (Catch basin)			
	2.25 × 2.4 m = 5.4 m²			
	4.5 × 4.65 m = 20.925 m²			
	(5.4 + 20.925) × 1/2 × 2.25 = 29.616 m³			
	29.616 × 7 nos = 207.312	m³	207.312	

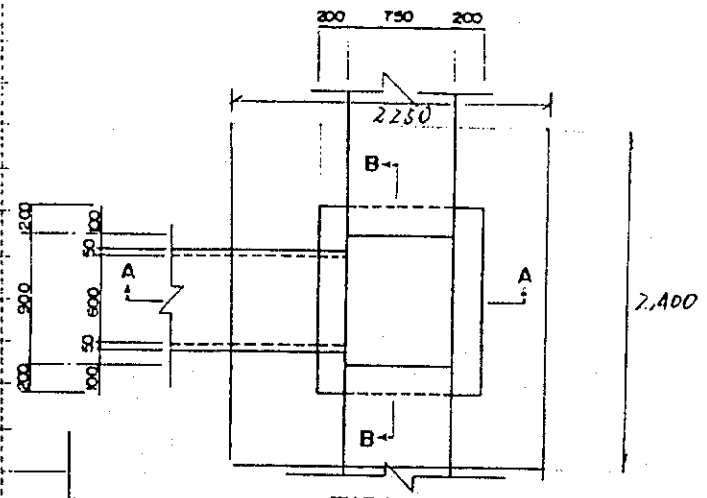

TIPO-A ESCALA B
TYPE-A SCALE B

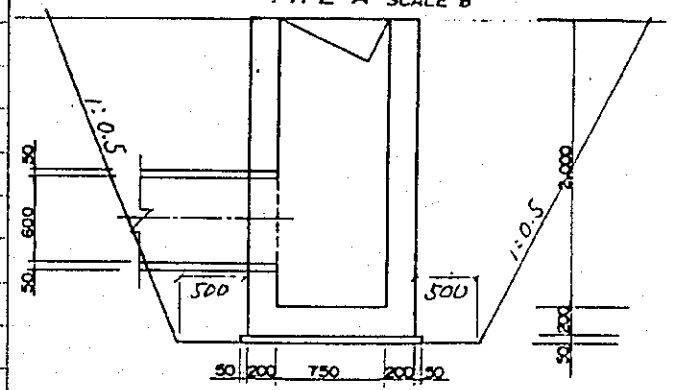

SECCION A-A
SECTION A-A

Working Division:

Description	Calculation Details	Unit	Quantity	Remarks
3 102	Backfill with selected material			
	<catch basin>			
	29.616 − 1.15 × 1.3 × 2.2 − 1.25 × 1.4 × 0.05			
	= 26.240			
	26.240 × 7 nos = 183.68	m^3	183.680	

6-291

Working Division:

Description	Calculation Details	Unit	Quantity	Remarks
3 109	Concrete class E for			
	(wing wall)			
	(pipe type)			
	1. ø 600 (h_1 = 650 mm, b = 800 mm)			
	(L_1 = 975 mm, h_2 = 700 mm) L_2 = 1.5 M = 400 mm			
	ⓐ 1.1 × 0.95 × 0.15 m = 0.157 m^3			
	ⓑ 0.975 × 0.65 × 0.15 × 1/2 × 2 = 0.095 m^3			
	ⓒ 1.7 × 0.975 × 0.2 = 0.215 m^3			
	ⓓ 1.1 × 1.0 × 0.15 m = 0.165 m^3			
	ⓔ 1.05 × 0.7 × 1/2 × 0.15 × 2 = 0.110 m^3			
	ⓕ 1.1 × 1.05 × 0.2 m = 0.231 m^3			
	ⓖ 0.3 × 0.4 × 1.1 m × 2 = 0.264 m^3			
	1.337 m^3			
	1.337 × 3 = 3.711	m^3	9.101	
	0.77 × 7 = 5.39			

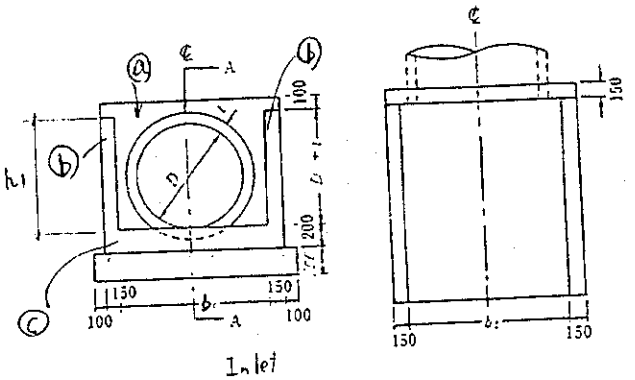

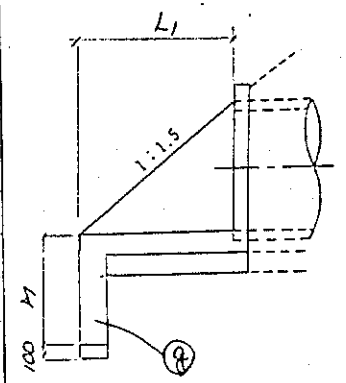

D	b (mm)
D 400	600
D 450	650
D 500	700
D 600	800
D 700	900
D 800	1,000
D 900	1,100

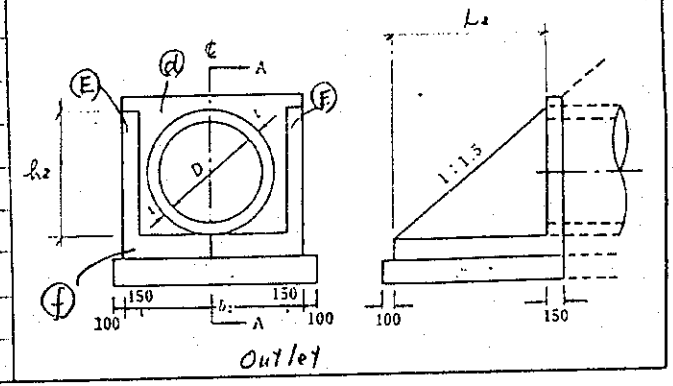

6-692

Working Division:

Description	Calculation Details	Unit	Quantity	Remarks
3 109.	2. φ800. $h_1 = 0.866$ m, $L_1 = 1.299$ m			
	$b = 1.0$ m, $h_2 = 0.932$, $L_2 = 1.398$ m			
	$M = 0.6$ m.			
	ⓐ: $1.3 \times 1.166 \times 0.15 = 0.227$ m³			
	ⓑ: $0.866 \times 1.299 \times 1/2 \times 0.15 \times 2 = 0.169$ m³			
	ⓒ: $1.3 \times 1.299 \times 0.2 = 0.338$ m³			
	ⓓ: $1.3 \times 1.232 \times 0.15 = 0.240$ m³			
	ⓔ: $0.932 \times 1.398 \times 1/2 \times 0.15 \times 2 = 0.195$ m³			
	ⓕ: $1.3 \times 1.398 \times 0.2 = 0.363$ m³			
	ⓖ: $0.3 \times 0.6 \times 1.3 \times 2 = 0.468$ m³			
	2.0 m³			
	$2.0 \times 1 = 2.0$	m³	2.0	

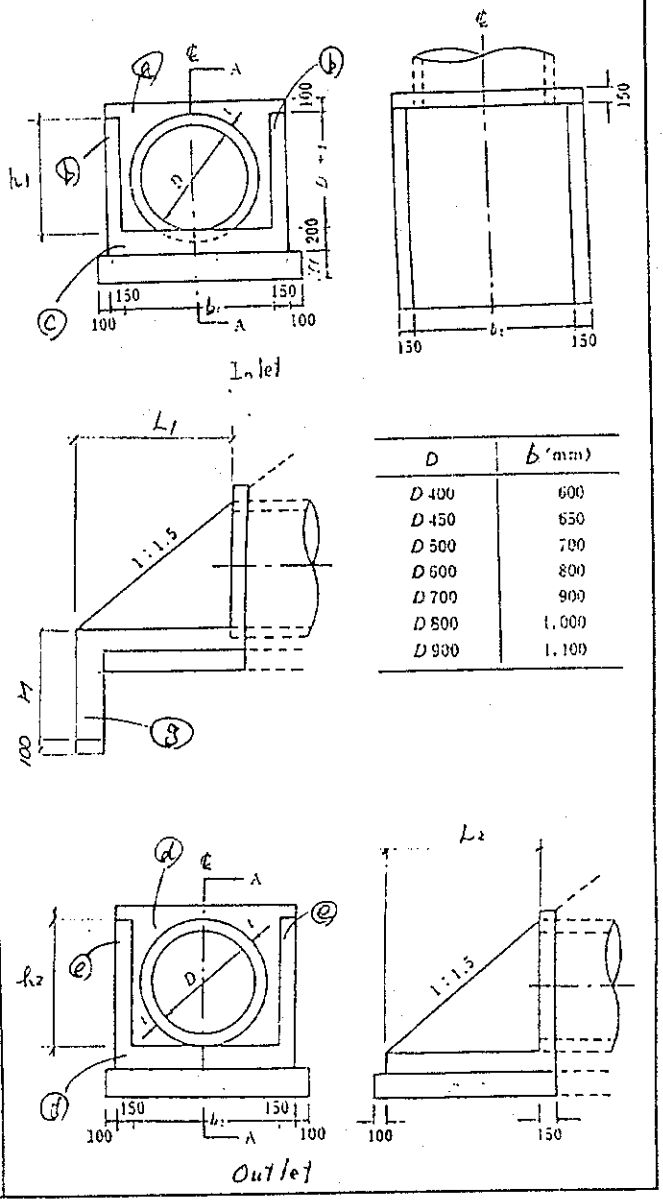

D	b (mm)
D 400	600
D 450	650
D 500	700
D 600	800
D 700	900
D 800	1,000
D 900	1,100

6-483

Working Division:

Description	Calculation Details	Unit	Quantity	Remarks
3 109	Concrete class E			
	(Wing wall)			
	7. 2.5m × 2.0m (II)			
	(Wing)			
	{(11.5 + 4.15) × 2.45 × ½ + 0.7 × 11.5			
	− 2.0 × 2.5} × 0.3			
	= 6.666			
	(slab)			
	3.2 × 3.7 × 0.45 = 5.328			
	0.3 × 1.15 × 3.2 = 1.104			
	13.098 m³			
	13.098 × 2 × 1 = 26.196	m³	29.196	

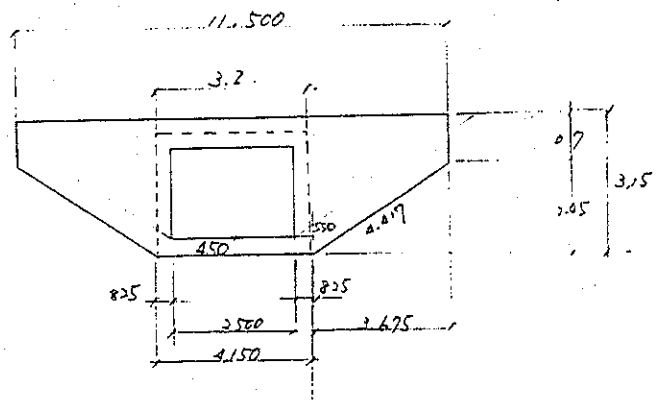

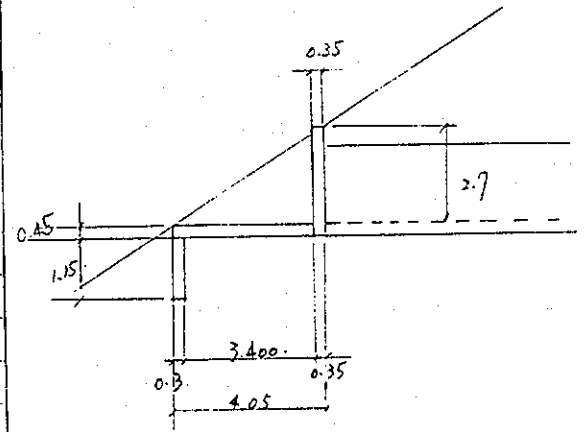

6-496

Working Division:

Description	Calculation Details	Unit	Quantity	Remarks
3 1/10	Concrete, class F for side ditch and catch basin			
	(catch basin) per 1 no.			
	1.15 × 1.30 × 2.2			
	− 0.75 × 0.9 × 2.0 = 1.939 m³			
	1.939 − 0.35π × 0.2 = 1.862 m³			
	1.862 × 7 = 13.034	m³	13.034	

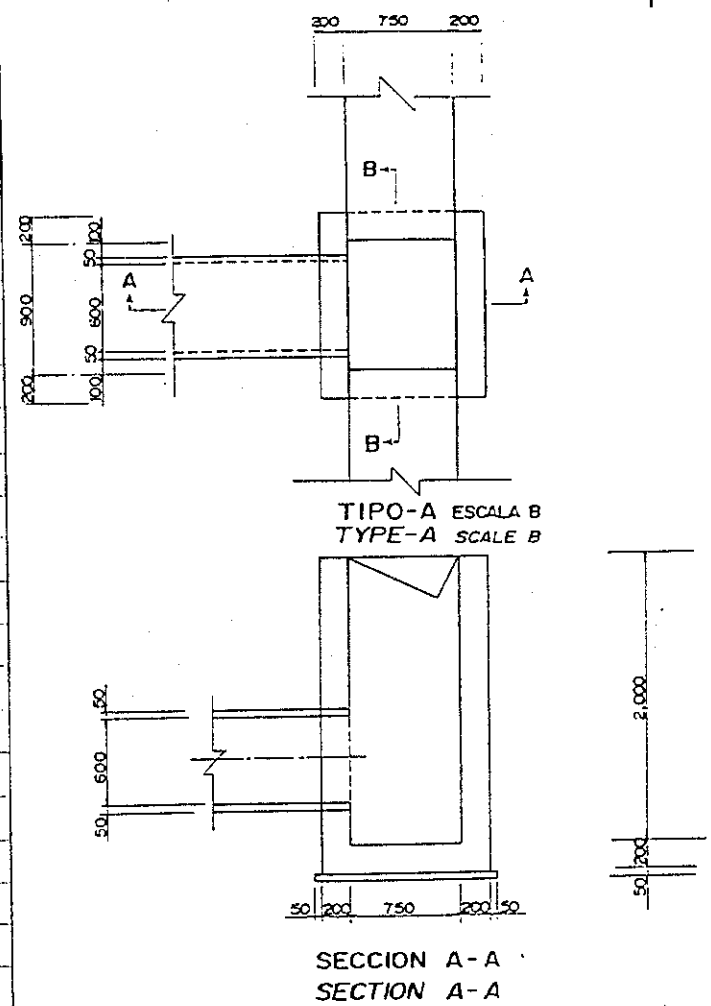

Working Division:

Description	Calculation Details	Unit	Quantity	Remarks
3 110	Concrete class F for side ditch and catch basin			
	(Side ditch) per 1 m			
	1.08 × 0.432 × 1/2			
	− 0.75 × 0.3 × 1/2 = 0.121 m³			
	0.121 × 2192.65 = 265.311	m³	265.311	

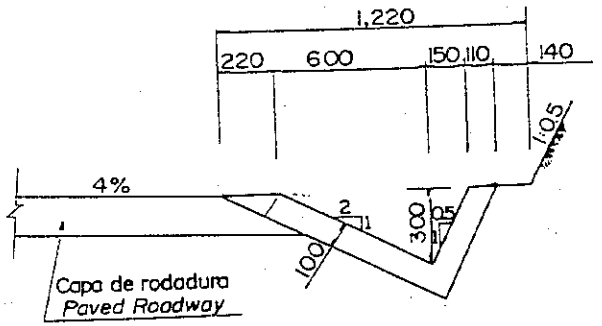

Working Division:

Description	Calculation Details	Unit	Quantity	Remarks
3 ///	Concrete, class H for levelling concrete			
	1. Ø 600 pipe (wing wall)			
	1.1m × 1.25 × 0.1 = 0.124 m³			
	1.1 × 1.20 × 0.1 = 0.132 m³			
	0.256 m³			
	0.256 × 3 = 0.768	m³	0.924	
	0.132 × 7 = 0.924			
	2. Ø 800 pipe			
	1.3 × 1.449 × 0.1 = 0.189 m³			
	1.3 × 1.598 × 0.1 = 0.201 m³			
	0.390 m³			
	0.390 × 1 = 0.390	m³	0.390	
	3. Ø 1,000 pipe			
	1.5 × 1.773 × 0.1 = 0.266 m³			
	1.5 × 1.896 × 0.1 = 0.284 m³			
	0.550 m³			

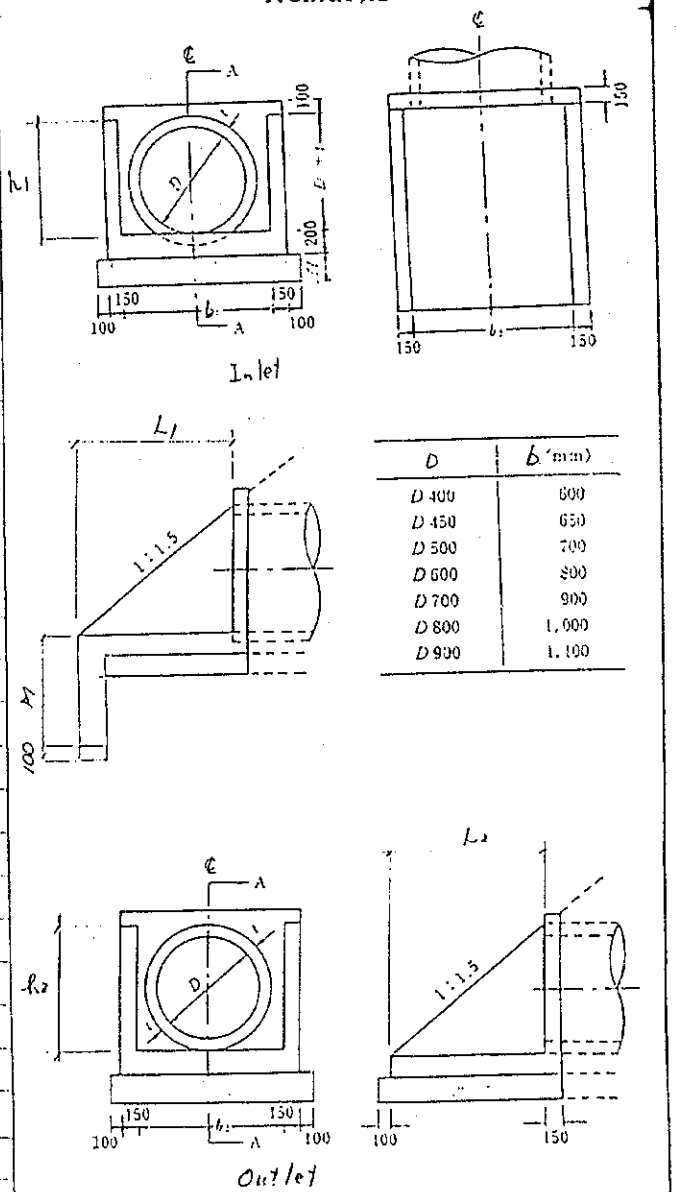

D	b (mm)
D 400	600
D 450	650
D 500	700
D 600	800
D 700	900
D 800	1,000
D 900	1,100

6-48

Working Division:

Description	Calculation Details	Unit	Quantity	Remarks
3 /11	Concrete class H			
	(Wing wall)			
	7 2.5×2.0 m (II)			
	(Wing) 0.35 × (4.417 × 2 + 4.15) × 0.1 = 0.467			
	(Slab) 3.2 × 3.7 × 0.1 = 1.184			
	1.651 m^3			
	1.651 × 2 × 1 = 3.302	m^3	3.302	

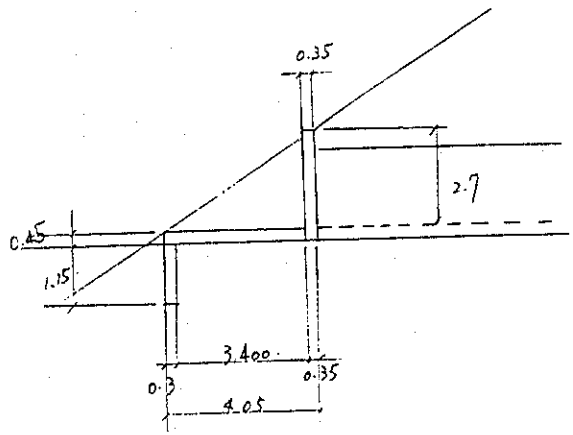

6-29

Working Division:

Description	Calculation Details	Unit	Quantity	Remarks
3. /11	Concrete class H for levelling concrete			
	(catch basin) per 1 no.			
	1.25 × 1.4 × ~~0.05~~ 0.10 = ~~0.088~~ 1.176 m^3			
	0.176 × 7 nos = 1.232	m^3	1.232	

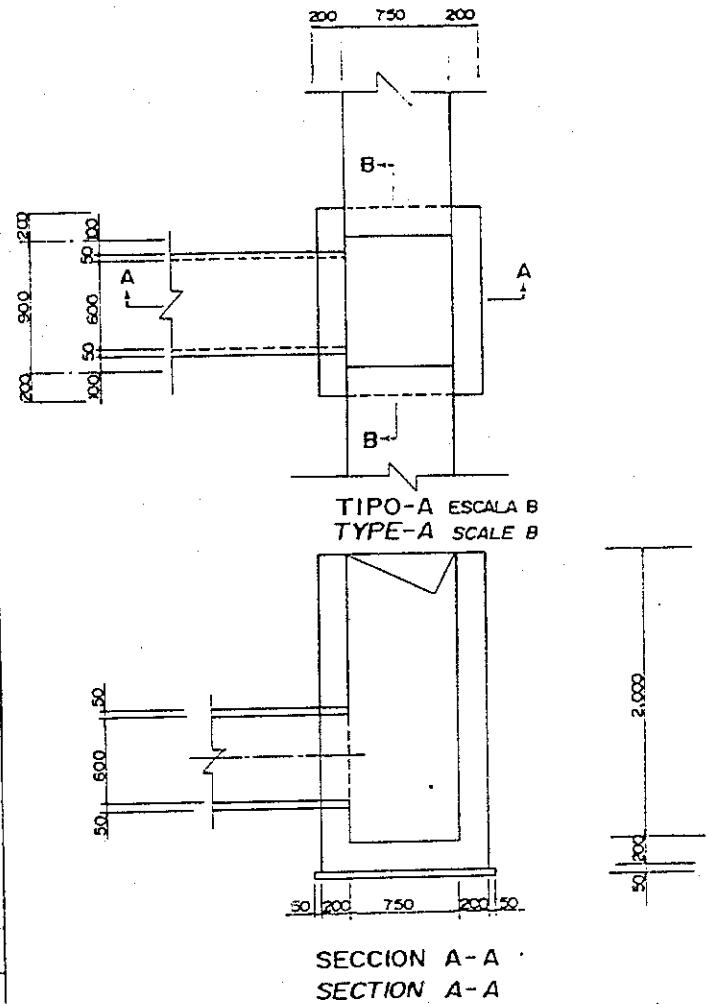

6-499

Working Division:

Description	Calculation Details	Unit	Quantity	Remarks
3 /12	Formwork, Fl finish for concrete of item 109, 110 and 111			
	(wing wall).			
	1. ϕ 600.			
	ⓐ 1.1m × 0.95m = 1.045 m²			
	1.045 − (0.3+0.05)²π = 0.660 m²			
	ⓑ (0.15+1.125) × 0.15/2 × 2 = 0.829 m²			
	ⓒ 0.15 × 0.1 × 2 = 0.03 m²			
	ⓓ 0.2 × (1.1 + 1.125 × 2) + 1.1 × (0.4 + 0.2) = 1.33			
	ⓔ 1.1m × 1.0 m = 1.100 m²			
	1.100 − (0.3+0.05)² π = 0.715			
	ⓕ (0.15 + 1.20) × 0.7 × ½ × 2 = 0.945			
	ⓖ 0.15 × 0.1 × 2 = 0.03 m²			
	ⓗ 0.2 × (1.1 + 1.20 × 2) + 1.1 × (0.4 + 0.2) = 1.36			
	5.899 m²			
	5.899 × 3 = 17.697	m³	39.047	
	3.05 × 7 = 21.35			

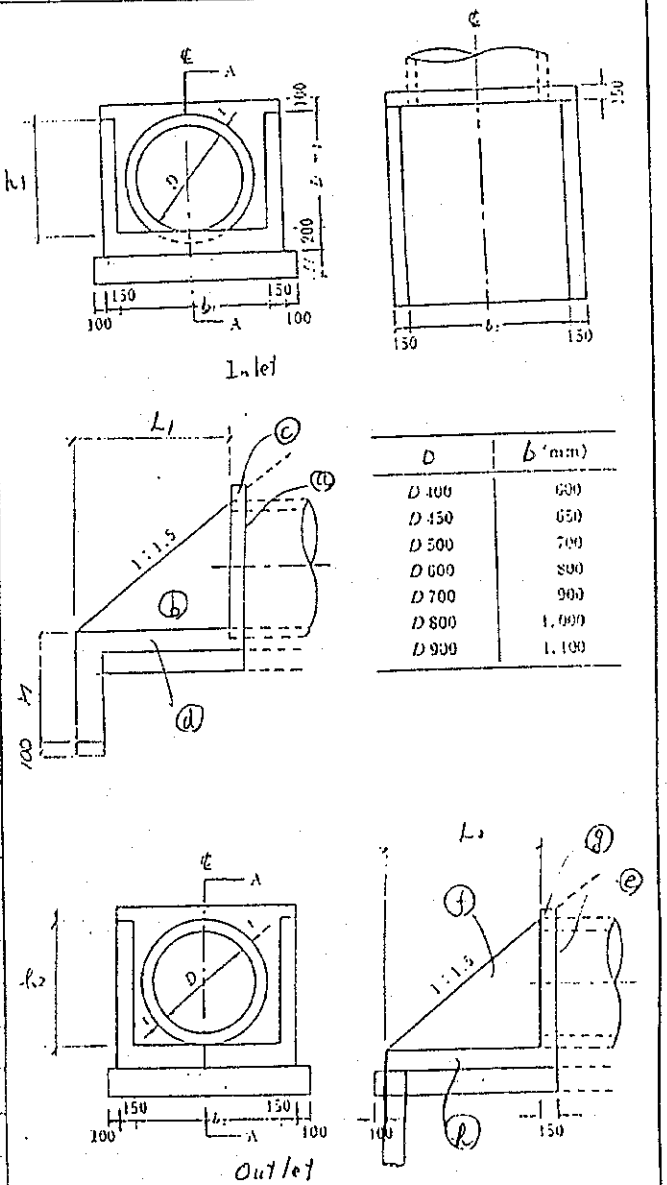

D	b (mm)
D 400	600
D 450	650
D 500	700
D 600	800
D 700	900
D 800	1,000
D 900	1,100

Working Division:

Description	Calculation Details	Unit	Quantity	Remarks
3 / 12	Formwork Fl finish			
	(wing wall)			
	2. Ø 800			
	ⓐ 1.3 m × 1.166 m = 1.516			
	1.516 − (0.466)²π = 0.834 m²			
	ⓑ (0.15 + 1.449) × 0.866 × ½ × 2 = 1.385 m²			
	ⓒ 0.15 × 0.1 × 2 = 0.03			
	ⓓ 0.2 × (1.3 + 1.449 × 2) + 1.3 (0.6 + 0.4) = 2.140			
	ⓔ 1.3 × 1.232 = 1.602			
	1.602 − 0.466²π = 0.920 m²			
	ⓕ (0.15 + 1.548) × 0.932 × ½ × 2 = 1.583 m²			
	ⓖ 0.15 × 0.1 × 2 = 0.03			
	ⓓ 0.2 × (1.3 + 1.548 × 2) + 1.3 × (0.6 + 0.4) = 2.179			
	9.101 m²			
	9.101 × 1 = 9.101	m²	9.101	

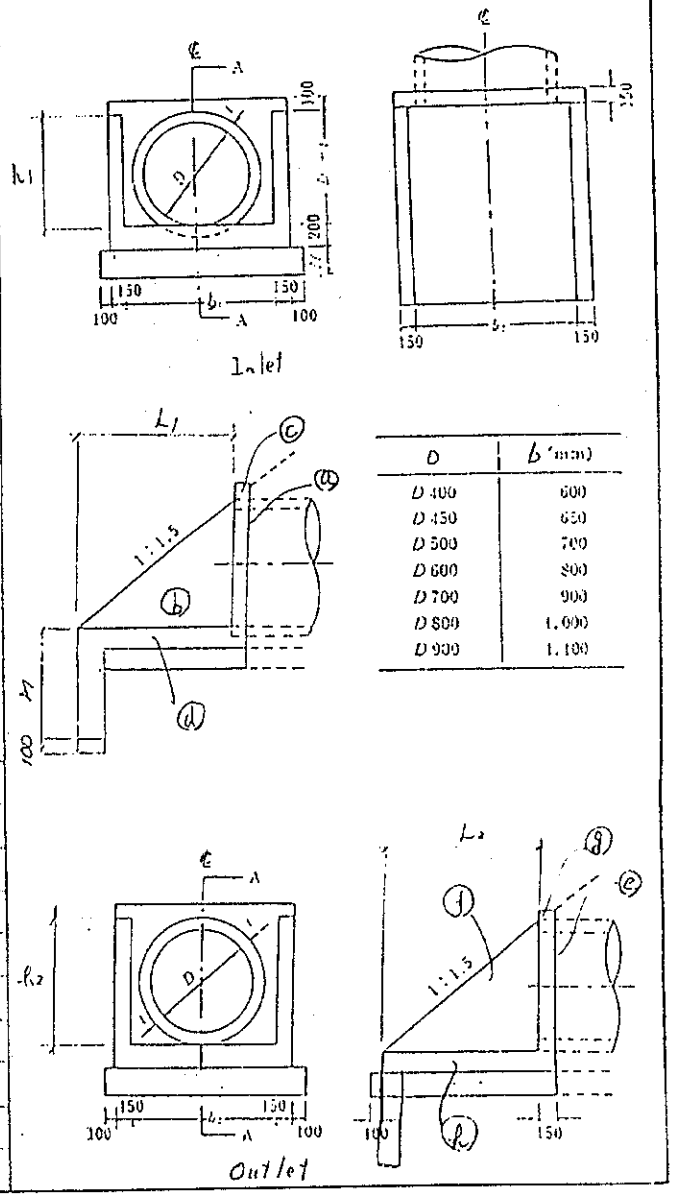

D	b (mm)
D 400	600
D 450	650
D 500	700
D 600	800
D 700	900
D 800	1,000
D 900	1,100

Working Division:

Description	Calculation Details	Unit	Quantity	Remarks
3 1/12	Formwork El finish			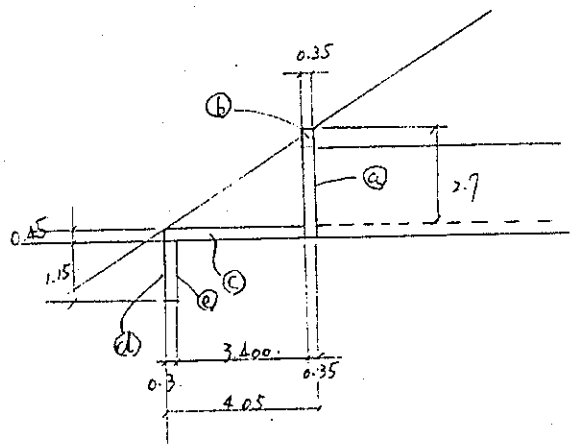
	7. 2.5 × 2.0 (II)			
	ⓐ (11.5 + 4.15) × 2.45 × 1/2 + 0.7 × 11.5			
	− 3.2 × 2.85 = 18.101			
	ⓑ 0.7 × 0.35 × 2 = 0.49			
	ⓒ (3.7 × 1.6 − 3.4 × 1.2) × 2 = 3.68			
	ⓓ 1.6 × 3.2 = 5.12			
	ⓔ 1.2 × 3.2 = 3.84			
	31.231 m²			
	31.231 × 2 × 1 = 62.462	m²	62.462	

6-202 (1)

Working Division:

Description	Calculation Details	Unit	Quantity	Remarks
.3 /12	Formwork El finish			
	(Catch basin)			
	1.15 × 2.2 × 2 = 5.06			
	1.30 × 2.2 × 2 − 0.35²π = 5.335			
	10.395 m²			
	10.395 × 7 = 72.765 m²	m²	72.765	

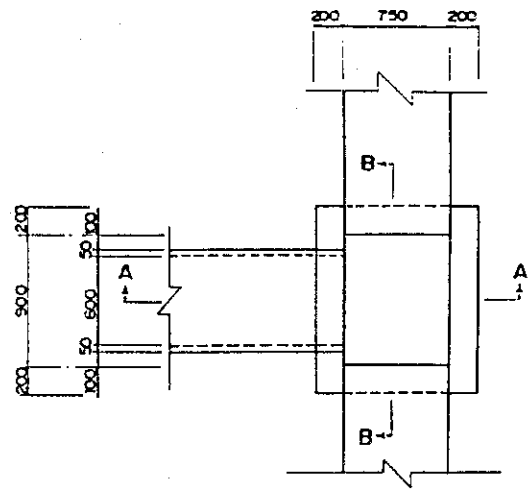

TIPO-A ESCALA B
TYPE-A SCALE B

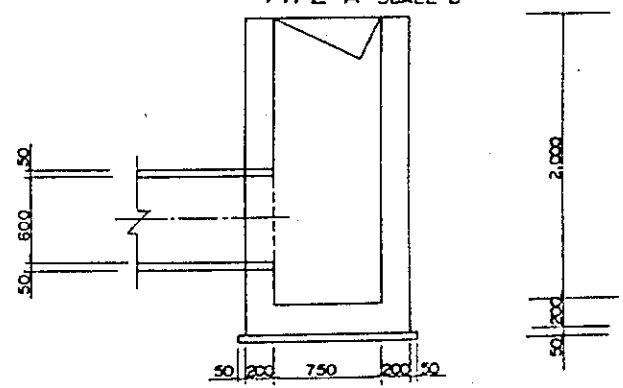

SECCION A-A
SECTION A-A

6-102 (2)

Working Division:

Description	Calculation Details	Unit	Quantity	Remarks
3 /13	Formwork F3 finish			
	(Wing wall)			
	1. Ø600			
	ⓐ 0.1×1.1 + 0.8×0.65 − 0.3²π = 0.347 m²			
	ⓑ 0.975×0.65×½×2 = 0.634 m²			
	ⓒ 0.1×1.1 + 0.8×0.70 − 0.3²π = 0.387 m²			
	ⓓ 1.05×0.70×½×2 = 0.735 m²			
	2.103 m²			
	2.103 × 3 = 6.309	m²	14.163	
	1.122 × 7 = 7.854			

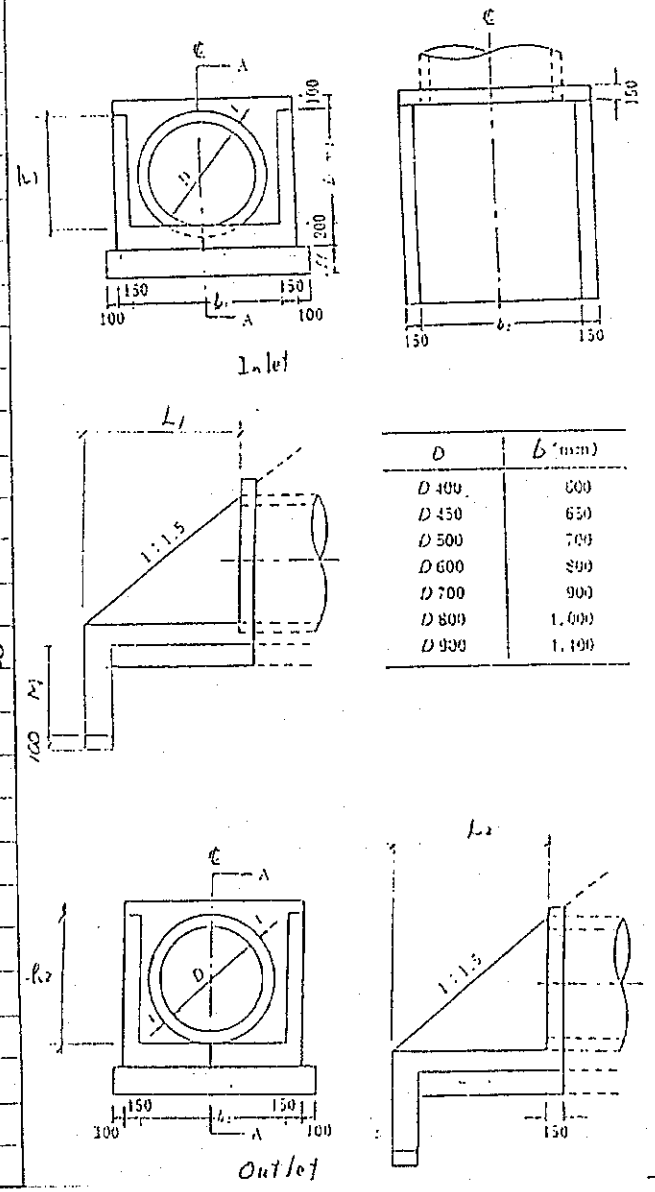

D	b (mm)
D 400	600
D 450	650
D 500	700
D 600	800
D 700	900
D 800	1,000
D 900	1,100

Working Division:

Description	Calculation Details	Unit	Quantity	Remarks
3 / 13	Formwork, F3 finish (wing wall)			
	2 Ø800			
	ⓐ 0.1 × 1.3 + 1.0 × 0.866 − 0.4² π = 0.493 m²			
	ⓑ 1.399 × 0.866 × 1/2 × 2 = 1.125 m²			
	ⓒ 0.1 × 1.3 + 1.0 × 0.932 − 0.4² π = 0.559 m²			
	ⓓ 1.398 × 0.932 × 1/2 × 2 = 1.303 m²			
	3.480 m²			
	3.480 × 1 = 3.480	m²	3.480	

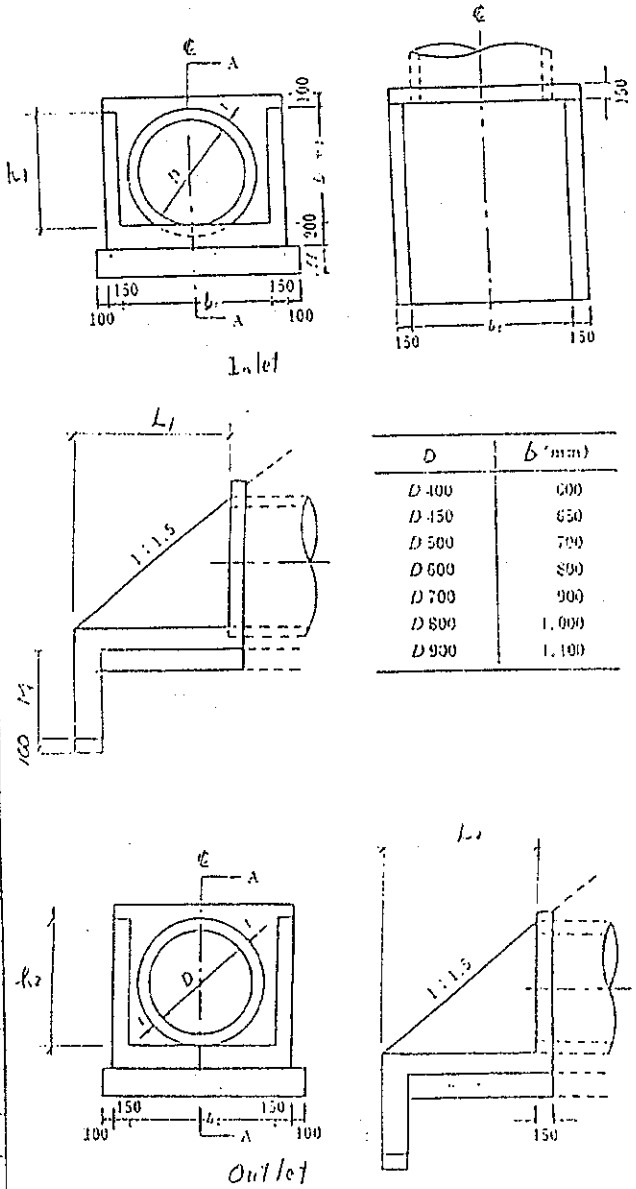

D	b (mm)
D 400	600
D 450	650
D 500	700
D 600	800
D 700	900
D 800	1,000
D 900	1,100

6-25

Working Division:

Description	Calculation Details	Unit	Quantity	Remarks
.3 /13	Formwork F3. finish			
	(wing wall)			
	5. 2.0 x 2.0 m (III)			
	(11 + 3.65) x 2.45 x 1/2 + 0.7 x 1.1			
	− 2.0² = 21.646 m²			
	6 2.5 x 2.0 (I)			
	(11.35 + 4.3) x 2.35 x 1/2 + 0.7 x 11.35			
	− 2.5 x 2.0 = 21.334 m²			
	7 2.5 x 2.0 (II)			
	(11.5 + 4.15) x 2.4 x 1/2 + 0.7 x 11.5			
	− 2.5 x 2.0 = 21.830 m²			
	21.83 x 2 x 1 = 43.66	m²	43.660	

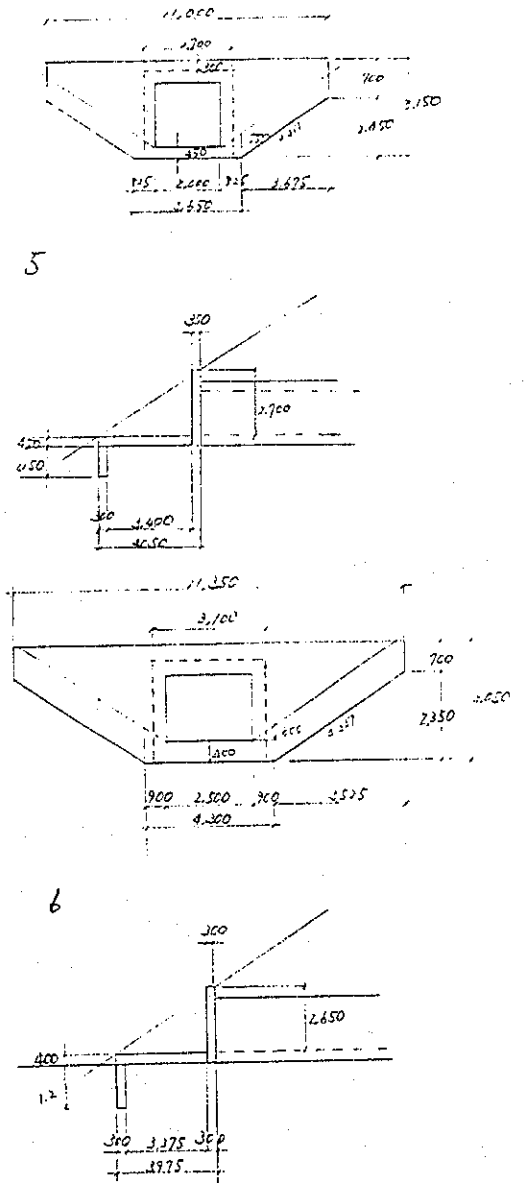

6-405

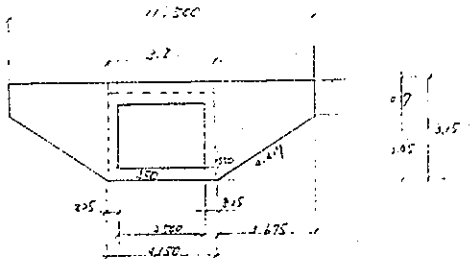
11.500
2.2
0.7
3.15
3.05
0.25
3.700
3.675
4.150

7

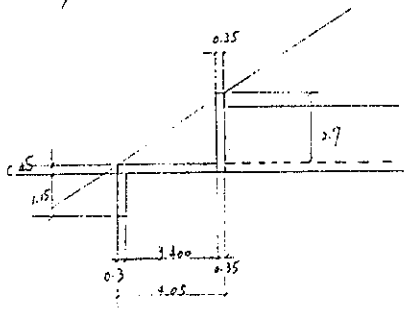
0.35
2.7
0.45
1.15
3.400
0.35
0.3
4.05

906-506

Working Division:

Description	Calculation Details	Unit	Quantity	Remarks
3 /13	Formwork F3 finish			
	(Catch basin)			
	0.75 × 2.0 × 2 = 3.0			
	0.90 × 2.0 × 2 − 0.3π = 3.317			
	6.317 m²			
	6.317 × 7 = 44.219	m²	44.219	

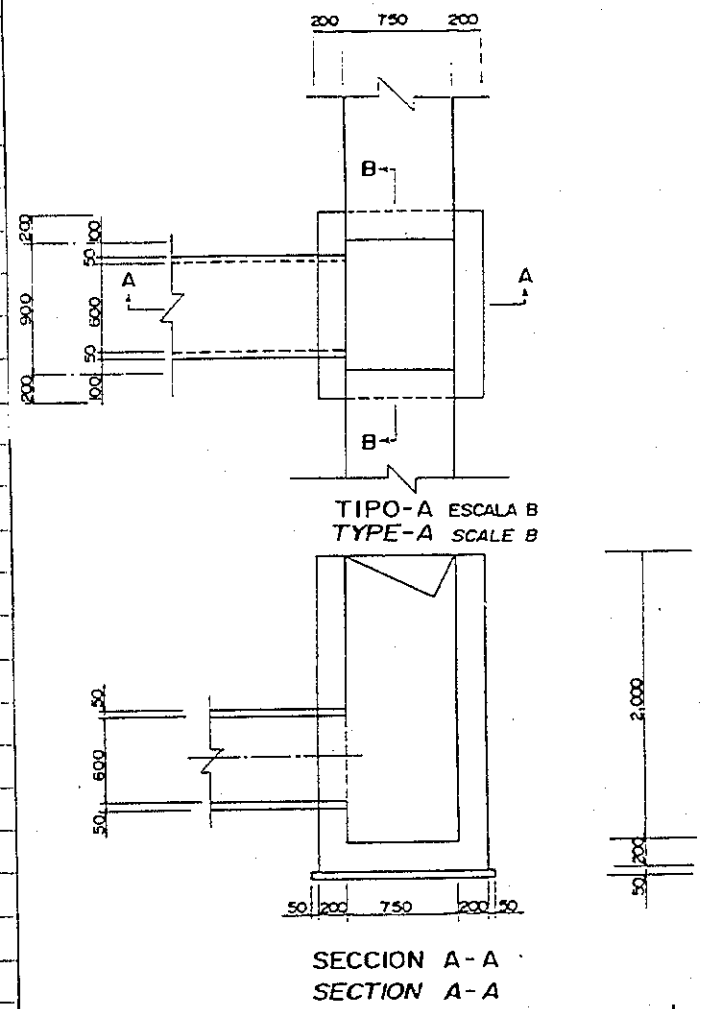

6-49

Working Division:

Description	Calculation Details	Unit	Quantity	Remarks
3 /13	Formwork, F3 finish for concrete item 109 and 110.			
	(Side ditch) per 1m			
	0.671 + 0.335 = 1.006 m^2			
	1.006 × 2192.65 = 2205.806	m^2	2,205.806	

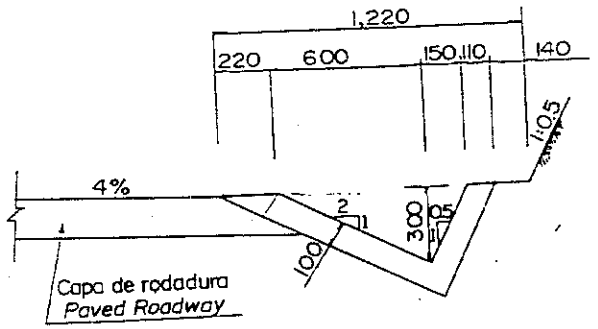

Page 5

Working Division:

Description	Calculation Details	Unit	Quantity	Remarks
1. 3 14	Reinforcing bars for concrete works			
	(wing wall)			
	80 kg / 1 m^3 of concrete volume			
	1. Ø 600			
	1.237 m^3 x 80 = 98.96 kg			
	98.96 x 3 = 296.88			
	0.77 x 80 x 7 = 431.2			
	2. Ø 800			
	2.000 m^3 x 80 = 160 kg			
	160 x 1 = 160			
	3. Ø 1,000			
	2.939 m^3 x 80 = 235.12 kg			

Working Division:

Description	Calculation Details	Unit	Quantity	Remarks
3 114	Reinforcing bars for concrete works (Wing wall)			
	6 2.5 x 2.0 m (I)			
	12.073 x 80 = 965.84 kg			
	7 2.5 x 2.0 m (II)			
	13.098 x 80 = 1047.84 kg			
	1047.84 x 2 x 1 = 2095.68			

Working Division:

Description	Calculation Details	Unit	Quantity	Remarks
3 114	Reinforcing bars for concrete works			
	(Catch basin)			
	80 kg/ 1 m³ of concrete volume			
	1.862 m³ × 80 kg/m³ = 148.96 m³			
	148.96 × 7 = 1042.72	Ton	1.1	

114-9

Working Division:

Description	Calculation Details	Unit	Quantity	Remarks
.3 1/15	Gabion mattress, t = 500 mm			
	(Wing wall part)			
	1. Ø600			
	(0.8 + 0.3) × 5.0 × 0.5 = 2.75 m³			
	2.75 × 2 × 3 = 16.5	m³	20.35	
	2.75 × 0.2 × 7 = 3.85			
	2. Ø800			
	(1.1 + 0.3) × 5.0 × 0.5 = 3.25 m³			
	3.25 × 2 × 1 = 6.50	m³	6.50	
	3. Ø1,000			
	(1.2 + 0.3) × 5.0 × 0.5 = 3.75 m³			
	4. 1.2 × 1.2 m			
	(2.434 × 2 + 3.3) × 5.0 × 0.5 = 20.42 m³			
	5. 1.5 × 1.5 m			
	(3.754 × 2 + 3.45) × 5.0 × 0.5 = 24.395 m³			

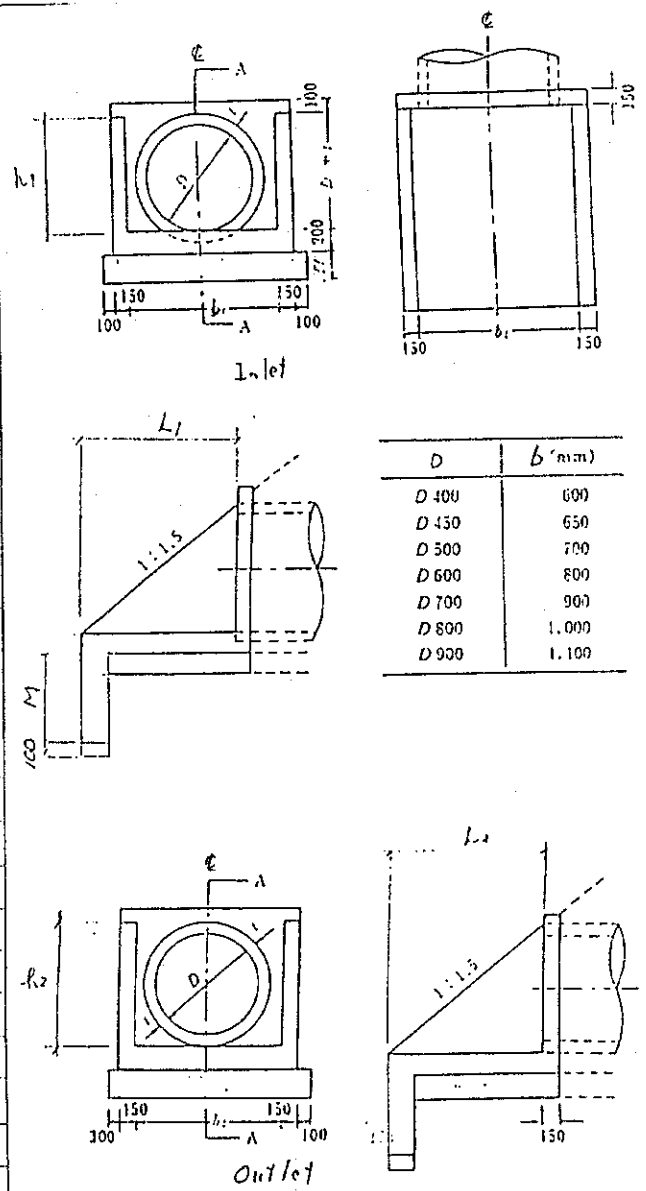

D	b (mm)
D 400	600
D 450	650
D 500	700
D 600	800
D 700	900
D 800	1,000
D 900	1,100

6-472

Working Division:

Description	Calculation Details	Unit	Quantity	Remarks
3 /15	Gabion mattress, t = 500 mm (Wing wall)			
	6. 2.0×2.0 (I) (4.256×2+3.95)×5.0×0.5 = 30.155 m³			
	7. 2.0×2.0 (II) (4.237×2+3.8)×5.0×0.5 = 30.685 m³			
	8. 2.0×2.0 (III) (4.417×2+3.65)×5.0×0.5 = 31.21 m³			
	9. 2.5×2.0 (I) (4.237×2+4.3)×5.0×0.5 = 31.935 m³			
	10. 2.5×2.0 (II) (4.417×2+4.15)×5.0×0.5 = 32.46 m³ 32.46×2×1 = 64.92	m³	64.920	

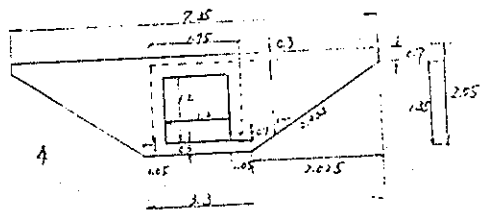

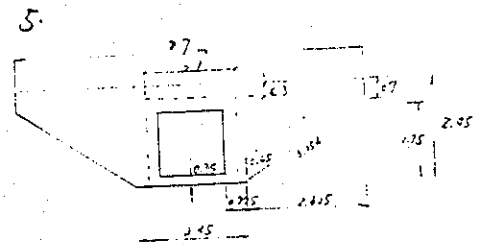

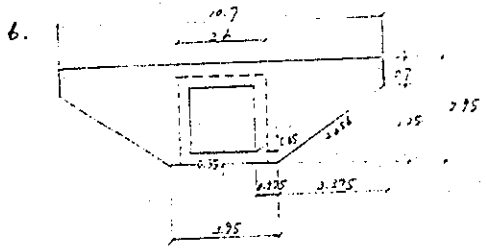

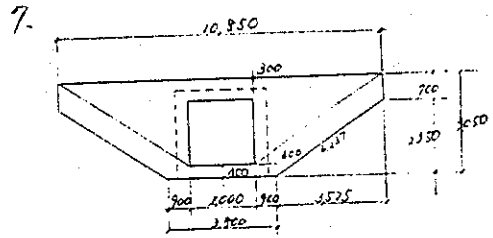

6-43

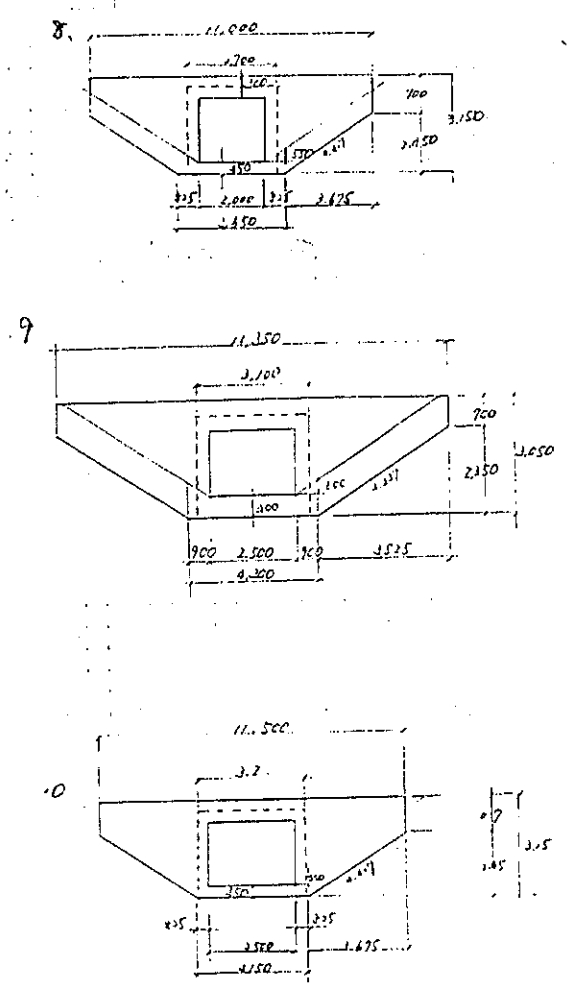
8.
11,000
3,150
3,050
2,000
2,475
4,150
9
11,350
3,100
750
3,050
2,150
900
2,500
4,525
8,300
10
11,500
3,2
3,5
350
2,500
2,475
4,150

Working Division:

Description	Calculation Details	Unit	Quantity	Remarks
.3 116	Joint Filler t=10 mm			
	6 2.5×2.0 (I)			
	3.1×2.75 − 2.5×2 = 3.525			6 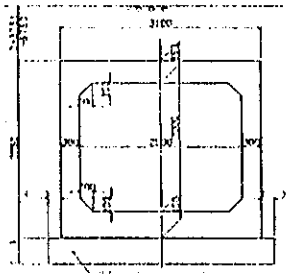
	7 2.5×2.0 (II)			
	3.2×2.85 − 2.5×2 = 4.120 m²			
	4.120 × 3 = 12.36	m²	12.36	
				7. 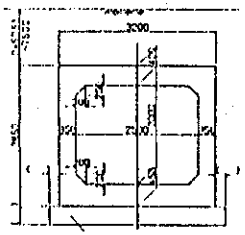

N4-6

Working Division:

Description	Calculation Details	Unit	Quantity	Remarks
.3 117	6. 2.5 × 2.0 (I)			
	~~3.1 × 2.75 - 2.5 × 2 = 3.525 m²~~			
	7. 2.5 × 2.0 (II)			
	3.2 × 2.85 - 2.5 × 2 = 4.120 m²			
	4.12 × 2 = 8.24	m²	8.24	

6.

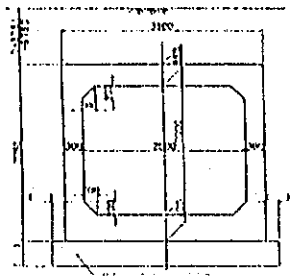

7.

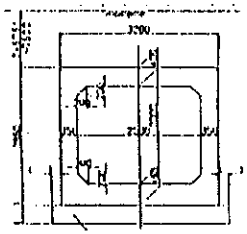

94-9

JICA