LONGITUD DE CUNETAS

CAMINO DE ACCESO: LOS CUYUYES 0+000 a 12+000 Km

+10.		9 bacin ABSCISAS	IZQUIERDA	DERECHA	LONGITUD
11.5		0+000.00 - 0+100.00	100.00	0.00	100.00
	✓	0+120.00 - 0+160.00	0.00	40.00	40.00
	✓ ✓	0+185.00 - 0+230.00	0.00	45.00	45.00
17.0		0+230.00 - 0+320.00	90.00	0.00	90.00
12.0		0+320.00 - 0+450.00	130.00	0.00	130.00
	✓	0+500.00 - 0+530.00	0.00	30.00	30.00
8.0		0+600.00 - 0+800.00	200.00	0.00	200.00
10.5		0+800.00 - 0+880.00	80.00	0.00	80.00
8.0		0+880.00 - 1+100.00	30.00	0.00	30.00
15.5		1+100.00 - 1+300.00	200.00	0.00	200.00
17.0, 9.0		1+300.00 - 1+446.33	146.33	0.00	146.33
	✓	1+503.99 - 1+568.36	0.00	64.37	64.37
20.0	✓	1+600.00 - 1+678.01	78.01	78.01	156.02
		1+678.01 - 1+750.00	71.99	0.00	71.99
	✓	1+750.00 - 1+800.00	50.00	50.00	100.00
10.5		1+800.00 - 1+820.00	20.00	0.00	20.00
12.0		1+898.47 - 2+010.74	112.27	0.00	112.27
13.5, 13.0		2+010.74 - 2+174.63	163.89	0.00	163.89
		2+324.15 - 2+450.00	125.85	0.00	125.85
11.5		2+450.00 - 2+490.00	40.00	0.00	40.00
9.0		2+490.00 - 2+514.26	24.26	24.26	48.52
		2+514.26 - 2+590.00	75.74	0.00	75.74
24.5		2+650.00 - 2+850.00	200.00	0.00	200.00
13		3+044.78 - 3+140.00	95.22	0.00	95.22
14.0	✓	3+140.00 - 3+177.45	37.45	37.45	74.90
	✓	3+177.45 - 3+250.00	0.00	72.55	72.55
27.0		3+250.00 - 3+352.28	102.28	102.28	204.56
		3+352.28 - 3+390.00	37.72	0.00	37.72
13 10.0	✓	3+390.00 - 3+405.58	15.58	15.58	31.16
		3+405.58 - 3+440.00	34.42	0.00	34.42
28.5	✓	3+440.00 - 3+478.80	38.80	38.80	77.20
28		3+478.80 - 3+573.30	0.00	94.70	94.70
9.0		3+573.30 - 3+740.06	166.68	0.00	166.68
27.0		3+803.43 - 3+830.00	76.57	0.00	76.57
	✓	3+950.00 - 3+986.66	36.66	0.00	36.66
8.5	✓	3+986.66 - 4+084.73	98.07	98.07	196.14
		4+180.00 - 4+287.99	107.99	0.00	107.99
27.0		4+287.99 - 4+400.00	112.00	0.00	112.00
12.0		4+400.00 - 4+546.64	146.64	0.00	146.64
	✓	4+546.64 - 4+605.80	0.00	59.16	59.16
10.0	✓	4+639.27 - 4+660.00	20.73	20.73	41.46
13.0		4+690.00 - 4+720.00	30.00	0.00	30.00

Total Length 15,399.38 m

addition 500 m

calch bacin / 81 nos.

13.5		4+720.00 - 4+870.00	150.00	0.00	150.00
	✓	4+870.00 - 5+021.33	121.33	0.00	121.33
13.0		5+021.33 - 5+050.00	28.62	28.62	57.24
		5+050.00 - 5+200.00	150.00	0.00	150.00
8.0		5+200.00 - 5+400.00	200.00	0.00	200.00
12.5		5+400.00 - 5+540.00	140.00	0.00	140.00
13.0		5+540.00 - 5+560.00	20.00	0.00	20.00
13.0	✓	5+560.00 - 5+580.00	20.00	20.00	40.00
		5+580.00 - 5+700.00	120.00	0.00	120.00
13.0		5+700.00 - 5+800.00	100.00	0.00	100.00
6.0	✓	5+800.00 - 5+900.00	100.00	100.00	200.00
13.0		5+900.00 - 6+100.00	200.00	0.00	200.00
		6+100.00 - 6+150.00	50.00	50.00	100.00
29.5	✓	6+150.00 - 6+250.00	100.00	0.00	100.00
		6+250.00 - 6+300.00	50.00	50.00	100.00
12.0	✓	6+500.00 - 6+540.00	240.00	0.00	240.00
6.0	✓	6+540.00 - 6+560.00	20.00	20.00	40.00
	✓	6+560.00 - 6+800.00	240.00	0.00	240.00
9.5	✓	6+800.00 - 6+860.00	0.00	60.00	60.00
28.5		6+896.46 - 7+000.00	103.54	0.00	103.54
	✓	7+000.00 - 7+075.00	75.00	75.00	150.00
		7+075.00 - 7+100.00	25.00	0.00	25.00
8.5		7+100.00 - 7+240.00	140.00	0.00	140.00
21.0		7+240.00 - 7+274.01	34.01	34.01	68.02
		7+274.01 - 7+290.00	15.99	0	15.99
	✓	7+290.00 - 7+330.00	40	40	80.00
12.0		7+330.00 - 7+359.76	29.76	0	29.76
	✓	7+359.76 - 7+387.84	27.88	27.88	55.76
15.0		7+387.84 - 7+470.00	82.36	0	82.36
35.0		7+470.00 - 7+700.00	230	0	230.00
21.0		7+700.00 - 7+900.00	200	0	200.00
19.0		7+937.45 - 8+000.00	62.55	0	62.55
		8+000.00 - 8+100.00	100	100	200.00
		8+100.00 - 8+220.00	120	0	120.00
15.0	✓	8+220.00 - 8+280.00	60	60	120.00
		8+280.00 - 8+340.00	60	0	60.00
17		8+340.00 - 8+431.40	91.4	0	91.40
8.0	✓	8+431.40 - 8+540.00	0	108.6	108.60
	✓	8+580.00 - 8+640.00	60	60	120.00
12.0		8+640.00 - 8+660.00	0	20	20.00
		8+660.00 - 8+680.00	20	0	20.00
	✓	8+680.00 - 8+730.00	50	50	100.00
18					
11.0		8+730.00 - 8+800.00	70	0	70.00
8.5		8+800.00 - 8+900.00	100	0	100.00
14.0	✓	8+900.00 - 8+940.95	40.95	40.95	81.90
		8+940.95 - 9+000.00	59.05	0	59.05
	✓	9+000.00 - 9+080.00	80	80	160.00
10.0		9+080.00 - 9+120.00	40	0	40.00

	✓	9+120.00 - 9+250.00	130	130	260.00
8.5		9+250.00 - 9+433.21	183.21	0	183.21
8.5		9+433.21 - 9+543.91	110.7	0	110.70
		9+650.00 - 9+670.00	20	0	20.00
9.0		9+670.00 - 9+900.00	230	0	230.00
12.0		9+900.00 - 9+980.00	80	0	80.00
6.0	✓	9+980.00 - 10+150.00	170	170	340.00
		10+150.00 - 10+250.00	100	0	100.00
6.0	✓	10+250.00 - 10+400.00	150	150	300.00
		10+400.00 - 10+534.01	134.01	0	134.01
6.0		10+534.01 - 10+750.00	215.99	0	215.99
6.0	✓	10+750.00 - 10+780.00	30	30	60.00
		10+780.00 - 11+000.00	220	0	220.00
		11+000.00 - 11+120.00	120	0	120.00
6.0	✓	11+120.00 - 11+230.00	110	100	210.00
6.0	✓	11+230.00 - 11+380.00	100	100	200.00
		11+380.00 - 11+500.00	120	0	120.00
6.0	✓	11+640.00 - 11+720.00	80	80	160.00
		11+720.00 - 11+825.77	105	0	105.00
8 6.0	✓	11+825.77 - 11+872.65	46	46	92.00
14 9.0		11+872.65 - 12+000.00	127.35	0	127.35
				LONG. TOTAL (	12481.52

Los Cuyuyes

	ø600	Station		Left	Right	Total
*	12.0	12+000.00 ~	12+160.00	160.00	100.00	260.00
		12+474.00 ~	12+600.00	126.00	0.00	126.00
*		12+600.00 ~	12+700.00	0.00	100.00	100.00
	15.0	12+700.00 ~	12+860.00	160.00	0.00	160.00
		12+860.00 ~	12+880.00	20.00	0.00	20.00
*	9.5	12+899.00 ~	12+950.00	0.00	51.00	51.00
	21.0	12+950.00 ~	13+100.00	0.00	150.00	150.00
		13+100.00 ~	13+172.65	0.00	72.65	72.65
*		13+220.00 ~	13+294.07	0.00	74.07	74.07
	15.0	13+294.07 ~	13+435.90	141.83	0.00	141.83
		13+435.90 ~	13+539.13	103.23	0.00	103.23
*		13+539.13 ~	13+580.00	0.00	40.37	40.37
	17.0	13+613.65 ~	13+800.00	186.35	0.00	186.35
*	6.0	13+800.00 ~	13+883.72	83.72	74.59	158.31
*		13+883.72 ~	14+220.00	336.28	303.76	640.04
	10.0	14+220.00 ~	14+256.95	36.95	0.00	36.95
*		14+256.95 ~	14+301.00	44.05	44.05	88.10
*		14+301.00 ~	14+360.00	59.00	59.00	118.00
	5.0	14+419.00 ~	14+453.00	33.46	0.00	33.46
		14+453.00 ~	14+479.00	26.00	0.00	26.00
*		14+479.00 ~	14+560.00	81.00	81.00	162.00
	9.0	14+560.00 ~	14+640.00	80.00	80.00	160.00
	119.5					2,908.36

10

15

Total length 12481.52 + 2908.36 = 15389.88 m

adition 50 nos x 10 m = 500 m 15889.88

catch basin 85 nos

Ø600 pipe 902 + 119.5 = 1021.5 m.

Working Division:

Description	Calculation Details	Unit	Quantity	Remarks
15.3 101	Open-cut excavation, all classes (Catch basin)			
	2.25 × 2.4 m = 5.4 m²			
	4.5 × 4.65 m = 20.925 m²			
	(5.4 + 20.925) × 1/2 × 2.25 = 29.616 m³			
	29.616 × 85 nos = 2,517.36			
		m³	2,517.360	

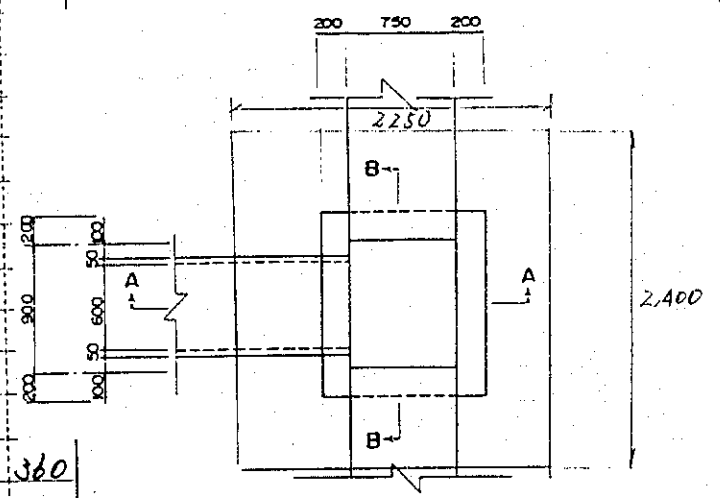

TIPO-A ESCALA B
TYPE-A SCALE B

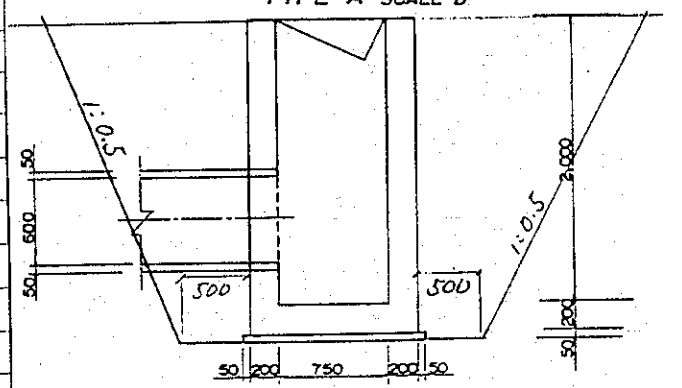

SECCION A-A
SECTION A-A

G-182

Working Division:

Description	Calculation Details	Unit	Quantity	Remarks
3 102	Backfill with selected material			
	<catch basin>			
	29.616 − 1.15 × 1.3 × 2.2 − 1.25 × 1.4 × 0.05 = 26.240			
	26.240 × 85 = 2230.4	m^3	2,230.400	

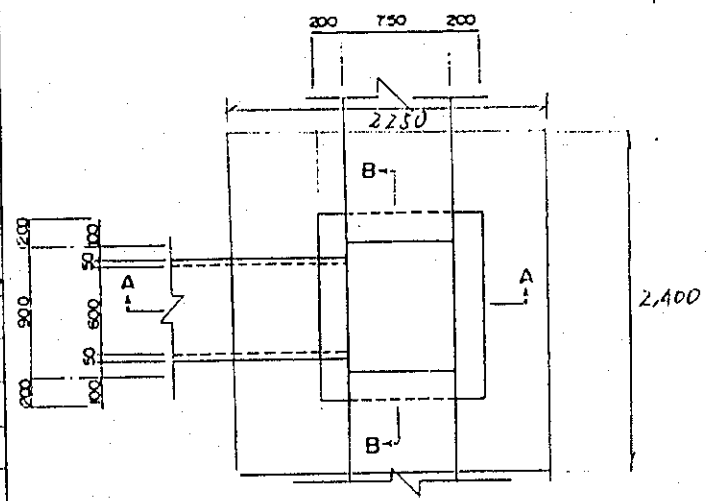

TIPO-A ESCALA B
TYPE-A SCALE B

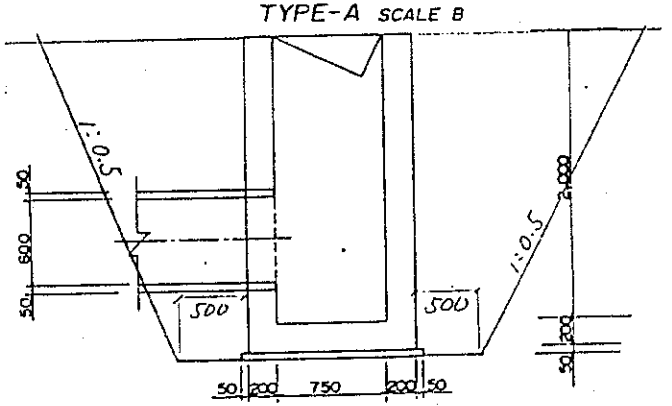

SECCION A-A
SECTION A-A

E-103

Working Division:

Description	Calculation Details	Unit	Quantity	Remarks
15.3 109	Concrete class E for			
	(wing wall)			
	(pipe type)			
	1. Ø 600 (h_1 = 650 mm, b = 800 mm)			
	(L_1 = 975 mm, h_2 = 700 mm) L_2 = 1.5 m = 400 mm			
	ⓐ 1.1 × 0.95 × 0.15 m = 0.157 m^3			
	ⓑ 0.975 × 0.65 × 0.15 × 1/2 × 2 = 0.095 m^3			
	ⓒ 1.7 × 0.975 × 0.2 = 0.215 m^3			
	ⓓ 1.1 × 1.0 × 0.15 m = 0.165 m^3			
	ⓔ 1.05 × 0.7 × 1/2 × 0.15 × 2 = 0.110 m^3			
	ⓕ 1.1 × 1.05 × 0.2 m = 0.231 m^3			
	ⓖ 0.3 × 0.4 × 1.1 m × 2 = 0.264 m^3			
	1.237 m^3			
	1.237 × 4 m = 4.948 m^3	m^3	70.398	
	0.77 × 85 = 65.45 m^3			

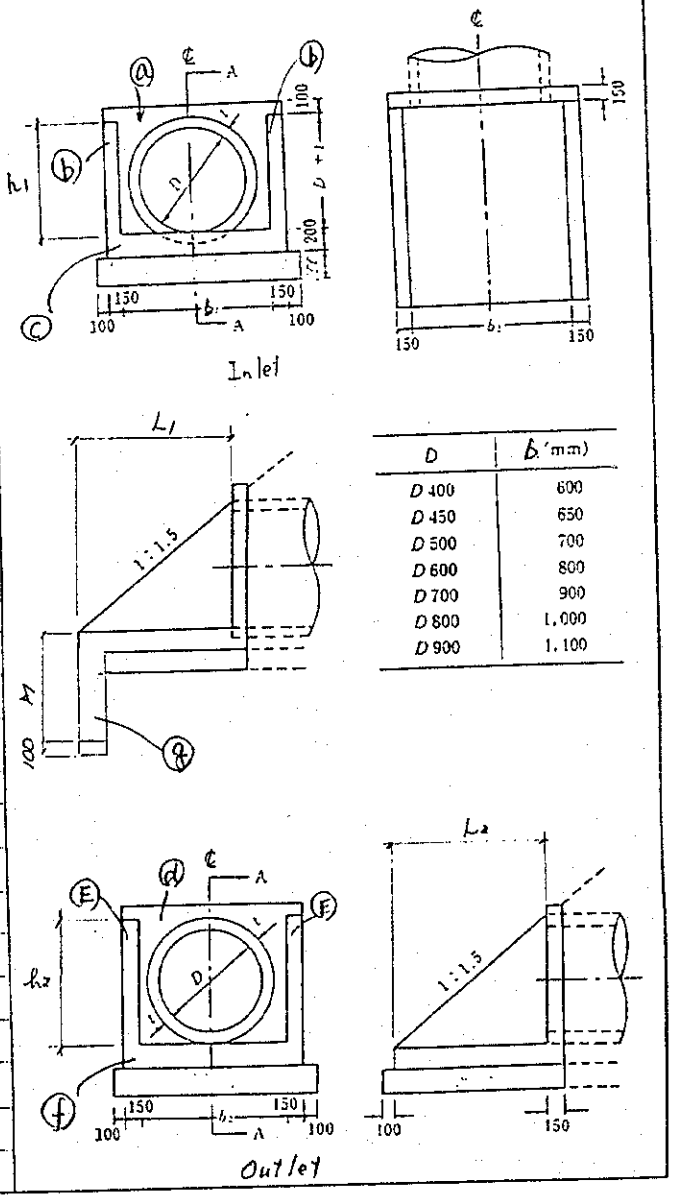

D	b (mm)
D 400	600
D 450	650
D 500	700
D 600	800
D 700	900
D 800	1,000
D 900	1,100

Working Division:

Description	Calculation Details	Unit	Quantity	Remarks
3 109.	2. φ800. $h_1 = 0.866$ m $L_1 = 1.299$ m $b = 1.0$ m, $h_2 = 0.932$, $L_2 = 1.398$ m $M = 0.6$ m			
	ⓐ: $1.3 \times 1.166 \times 0.15 = 0.227$ m³ ⓑ: $0.866 \times 1.299 \times \frac{1}{2} \times 0.15 \times 2 = 0.169$ m³ ⓒ: $1.3 \times 1.299 \times 0.2 = 0.338$ m³			
	ⓓ: $1.3 \times 1.232 \times 0.15 = 0.240$ m³ ⓔ: $0.932 \times 1.398 \times \frac{1}{2} \times 0.15 \times 2 = 0.195$ m³ ⓕ: $1.3 \times 1.398 \times 0.2 = 0.363$ m³			
	ⓖ: $0.3 \times 0.6 \times 1.3 \times 2 = 0.468$ m³			
	2.0 m³			
	$2.0 \times 7 = 14.0$ m³	m³	14.000	

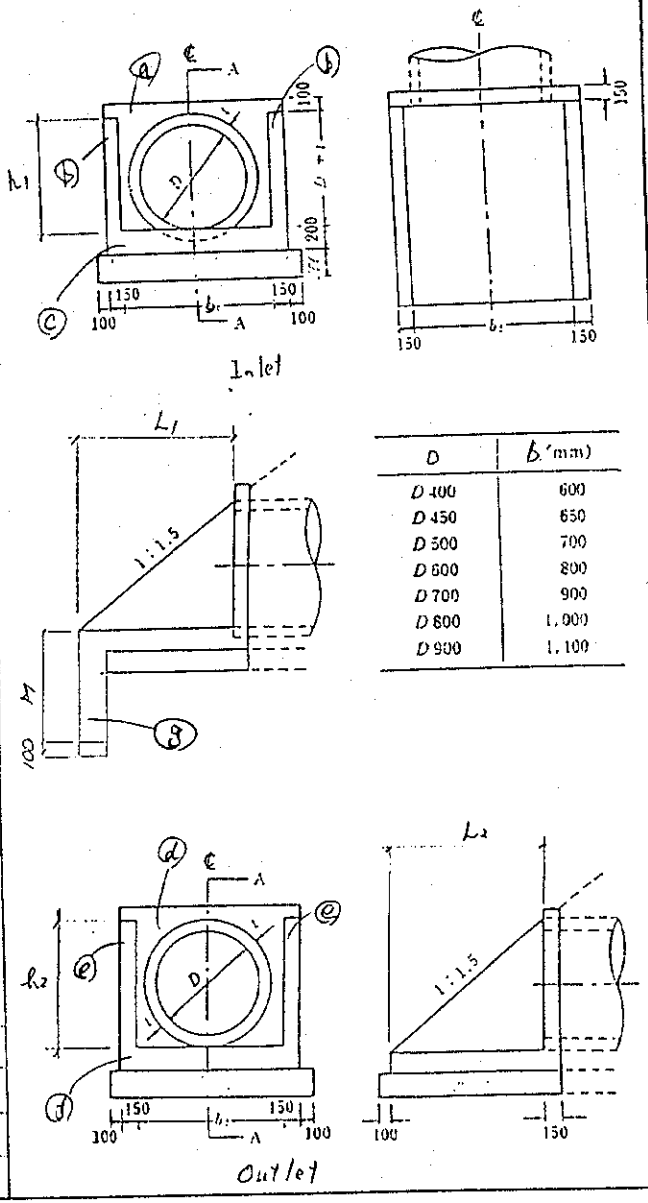

D	b (mm)
D 400	600
D 450	650
D 500	700
D 600	800
D 700	900
D 800	1,000
D 900	1,100

Working Division:

Description	Calculation Details	Unit	Quantity	Remarks
.3 109	3. Ø 1,000 wing wall $h_1 = 1.082$ m $L_1 = 1.623$ m, $b = 1.2$ m $h_2 = 1.164$ m $L_2 = 1.746$ m $H = 0.8$ m. ⓐ: $1.5 \times 1.382 \times 0.15 = 0.311$ m³ ⓑ: $1.082 \times 1.623 \times \frac{1}{2} \times 0.15 \times 2 = 0.263$ m³ ⓒ: $1.5 \times 1.623 \times 0.2 = 0.487$ m³ ⓓ: $1.5 \times 1.464 \times 0.15 = 0.329$ m³ ⓔ: $1.164 \times 1.746 \times \frac{1}{2} \times 0.15 \times 2 = 0.305$ m³ ⓕ: $1.5 \times 1.746 \times 0.2 = 0.524$ m³ ⓖ: $0.3 \times 0.8 \times 1.5 \times 2 = 0.720$ m³ 2.939 m³ 2.939 × 4 no. = 11.756	m³	11.756	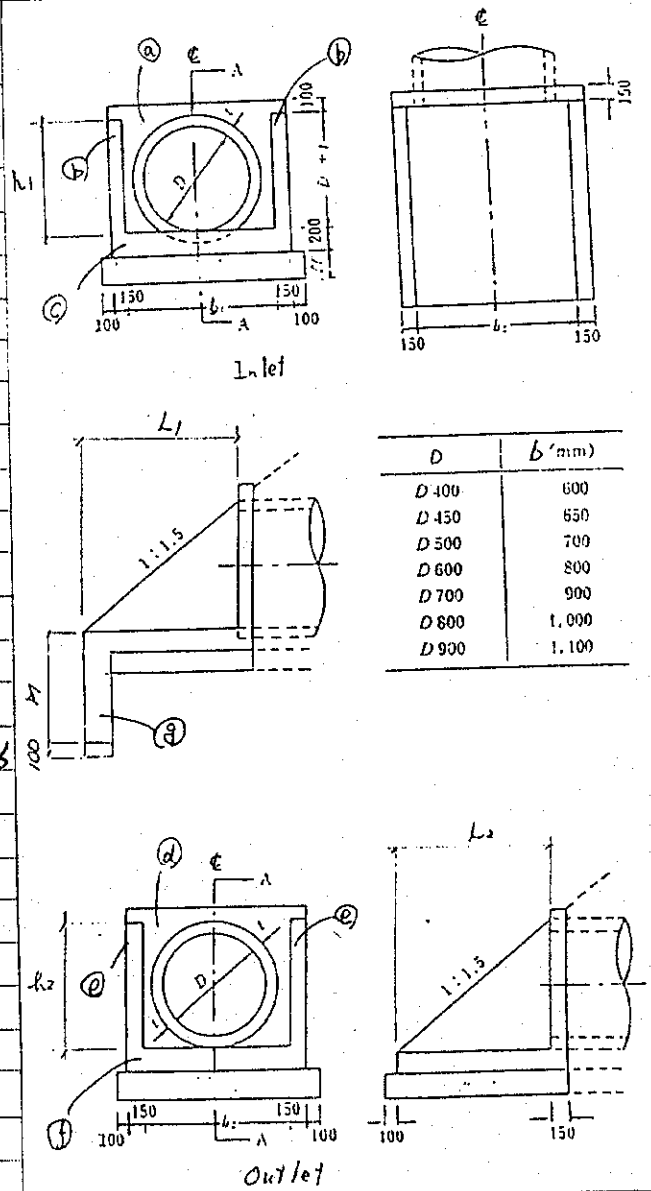

Working Division:

Description	Calculation Details	Unit	Quantity	Remarks
.3 109	Concrete, class E, for pipe culvert and wing wall.	m^3		
	(wing wall)			
	1. 1.2 × 1.2 m			
	(wing)			
	$\{(3.3+7.35) \times 1.35 \times 1/2 + 0.7 \times 7.35 - 1.2 \times 1.2\} \times 0.25 = 2.723\ m^3$			
	(slab)			
	$1.75 \times 2.325 \times 0.3 = 1.221$			
	$1.75 \times 0.7 \times 0.3 = 0.368$			
	$4.312\ m^3$			
	$4.312 \times 6 = 25.872$	m^3	25.872	

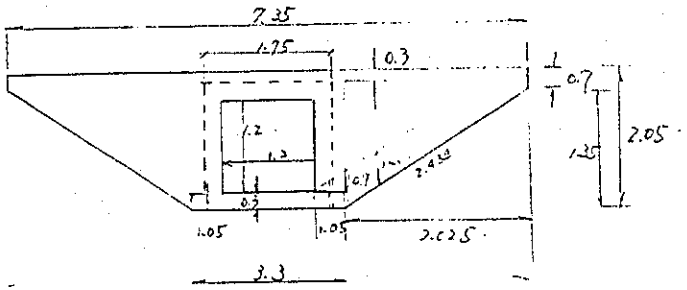

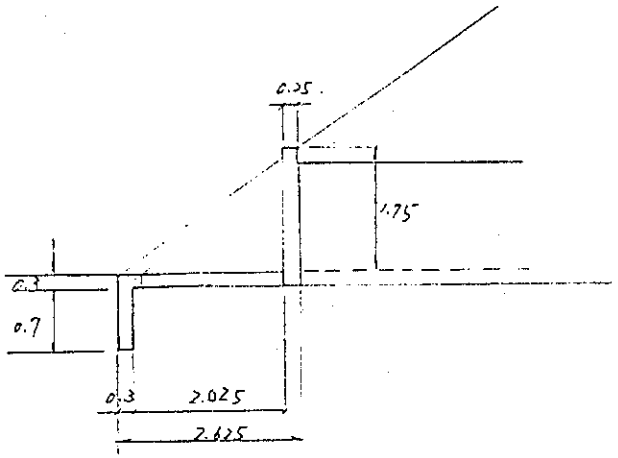

6-29

Working Division:

Description	Calculation Details	Unit	Quantity	Remarks
.3 /09	Concrete base E			
	(wing wall)			
	2 · 1.5 × 1.5 m.			
	(wing)			
	{(8.7 + 3.45) × 1.75 × 1/2 + 0.7 × 8.7			
	− 1.5² } × 0.3 = 4.341			
	(slab)			
	2.85 × 2.1 × 0.3 = 1.796			
	0.3 × 0.9 × 2.1 = 0.567			
	6.704 m³			
	6.704 × 8 = 53.632	m³	53.632	

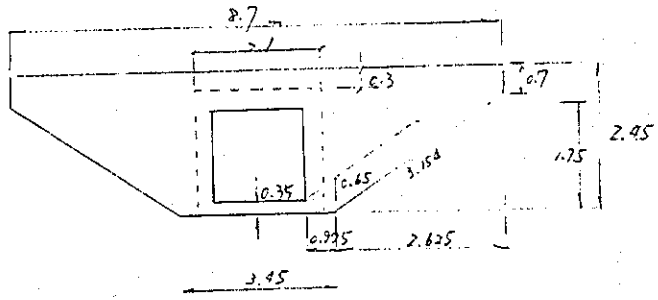

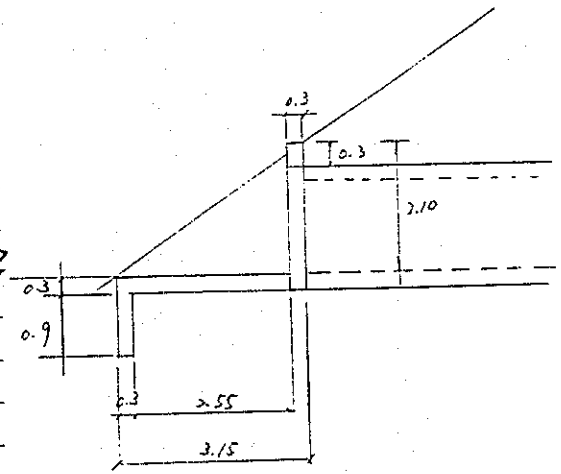

Working Division:

Description	Calculation Details	Unit	Quantity	Remarks
3 /09	Concrete class E (Wing wall).			
	4. 2.0 × 2.0 (II)			
	<wing>			
	$\{(10.85+3.8)\times 2.35\times 1/2+0.7\times 10.85 - 2.0^2\}\times 0.3 = 6.243$			
	<slab>			
	$2.6\times 3.675\times 0.4 = 3.822$			
	$0.3\times 1.20\times 2.6 = 0.936$			
	11.001 m^3			
	$11.001\times 4 = 44.004$	m^3	44.004	

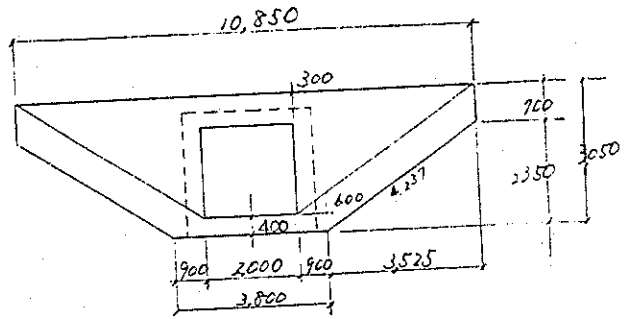

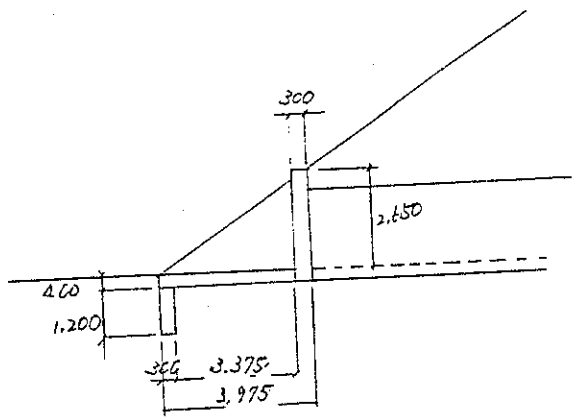

6-109

Working Division:

Description	Calculation Details	Unit	Quantity	Remarks
3 109	Concrete class E (Wing wall).			
	5. 2.0 × 20 (III)			
	<Wing> {(11.0 + 3.65) × 2.45 × 1/2 + 0.7 × 11.0 − 2.0²} × 0.35 = 7.576 m³			
	<slab> 2.7 × 3.70 × 0.45 = 4.496 0.3 × 1.15 × 2.70 = 0.932 13.004 m³			
	13.004 × 2 = 26.008	m³	26.008	

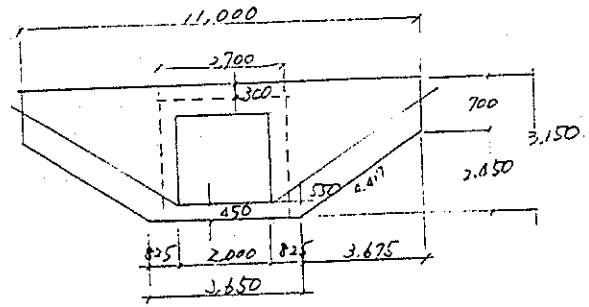

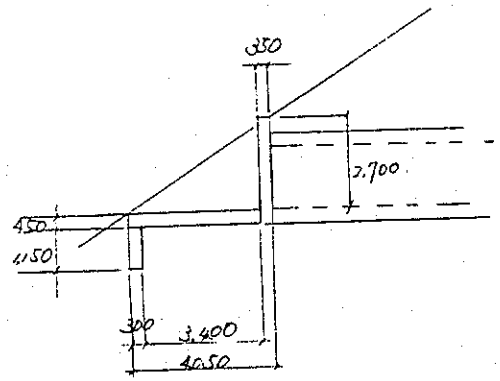

Working Division:

Description	Calculation Details	Unit	Quantity	Remarks
3 109	Concrete class E			
	(Wing wall)			
	b. 2.5×2.0 m (I)			
	(Wing)			
	{(11.35+4.3)×2.35×1/2 + 0.7×11.35			
	−2.0×2.5}×0.3			
	= 6.400			
	(slab)			
	3.1×3.675×0.4 = 4.557			
	0.3×1.2×3.1 = 1.116			
	12.073 m³			
	12.073×2 = 24.146	m³	24.146	

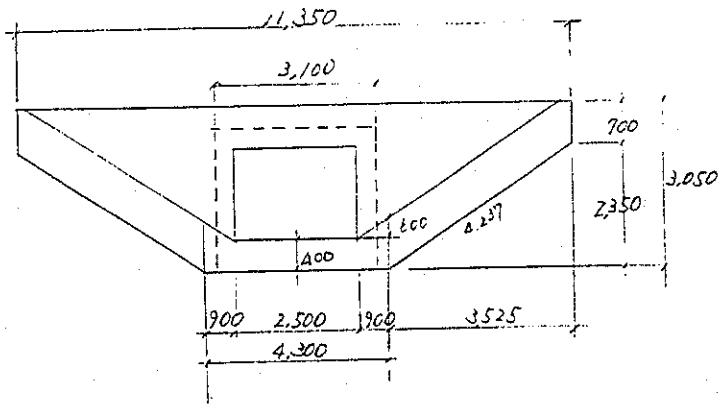

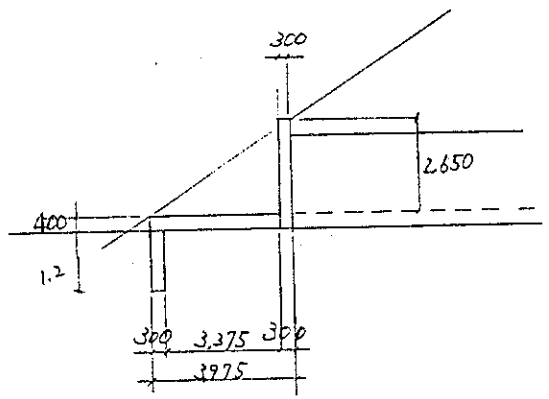

161-9

Working Division:

Description	Calculation Details	Unit	Quantity	Remarks
3 1/10	Concrete, class F for side ditch and catch basin			
	(catch basin) per 1 no.			
	1.15 × 1.30 × 2.2			
	− 0.75 × 0.9 × 2.0 = 1.939 m³			
	1.939 − 0.35π × 0.2 = 1.862 m³			
	1.862 × 85 = 158.270	m³	158.270	

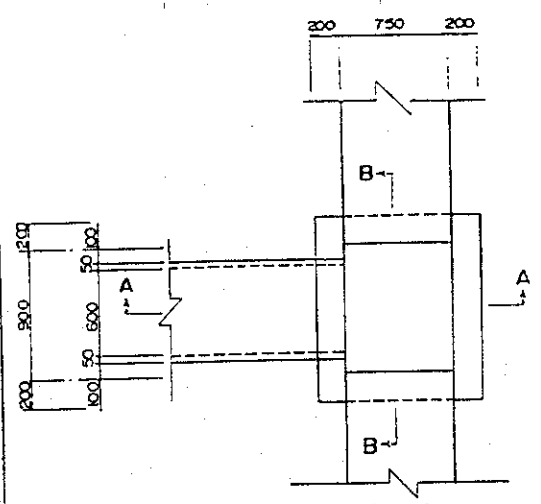

TIPO-A ESCALA B
TYPE-A SCALE B

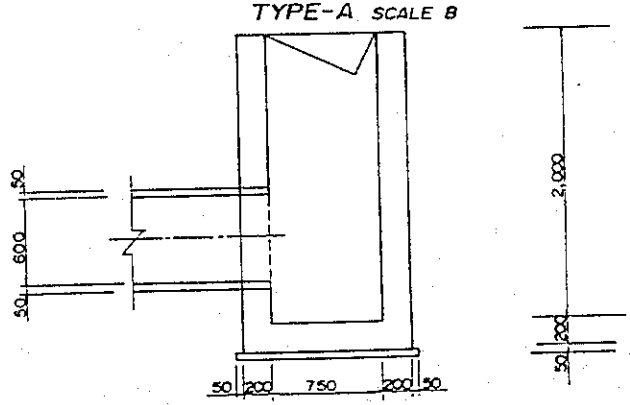

SECCION A-A
SECTION A-A

6-182

Working Division:

Description	Calculation Details	Unit	Quantity	Remarks
3 110	Concrete class F for side ditch and catch basin			
	(Side ditch) per 1 m			
	1.08 × 0.432 × 1/2			
	− 0.75 × 0.3 × 1/2 = 0.121 m³			
	0.121 × 15,389.88 = 1,862.175	m³	1,862.175	

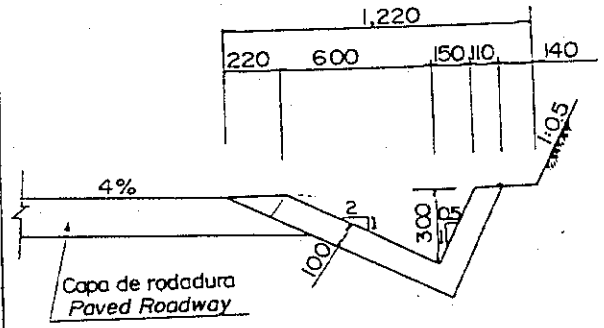

Working Division:

Description	Calculation Details	Unit	Quantity	Remarks
3 111	Concrete, class H for levelling concrete			
	1. Ø 600 pipe (wing wall)			
	1.1m × 1.125 × 0.1 = 0.124 m³.			
	1.1 × 1.20 × 0.1 = 0.132 m³			
	0.256 m³			
	0.256 × 4 nos = 1.024	m³	12.244	
	0.132 × 85 = 11.22.			
	2. Ø 800 pipe			
	1.3 × 1.449 × 0.1 = 0.189 m³.			
	1.3 × 1.548 × 0.1 = 0.201 m³			
	0.390 m³			
	∴ 0.390 × 7 nos = 2.730	m³	2.730	
	3. Ø 1,000 pipe.			
	1.5 × 1.773 × 0.1 = 0.266 m³			
	1.5 × 1.896 × 0.1 = 0.284 m³			
	0.550 m³.			
	0.550 × 4 nos = 2.200	m³	2.200	

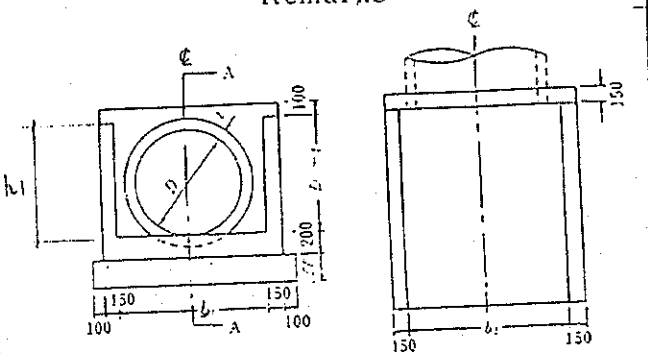

Inlet

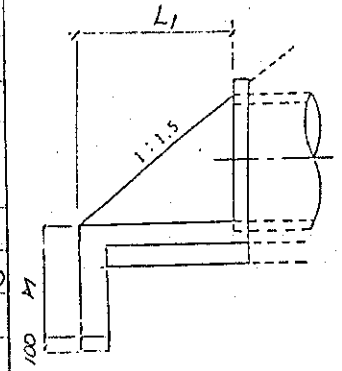

D	b (mm)
D 400	600
D 450	650
D 500	700
D 600	800
D 700	900
D 800	1,000
D 900	1,100

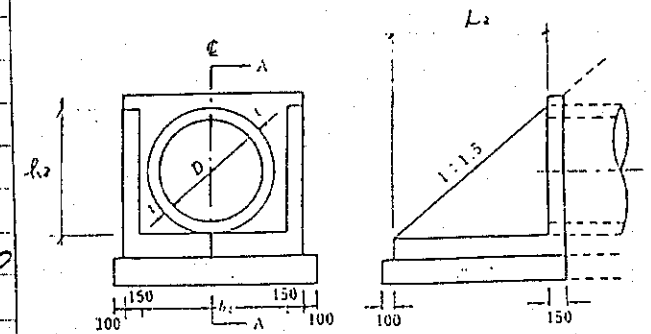

Outlet

Working Division:

Description	Calculation Details	Unit	Quantity	Remarks
3 /11	Concrete class H for levelling concrete (wing wall)			
	1. 1.2 × 1.2 m			
	(wing) 0.25 × (2.434 × 2 + 3.3) × 0.1 = 0.204			
	(slab) 1.75 × 2.325 × 0.1 = 0.407			
	0.611 m^3			
	0.611 × 2 × 3 = 3.666	m^3	3.666	
	2. 1.5 × 1.5 m			
	(wing) 0.3 × (3.154 × 2 + 3.45) × 0.1 = 0.293			
	(slab) 2.1 × 2.85 × 0.1 = 0.599			
	0.892 m^3			
	0.892 × 2 × 4 = 7.136	m^3	7.136	

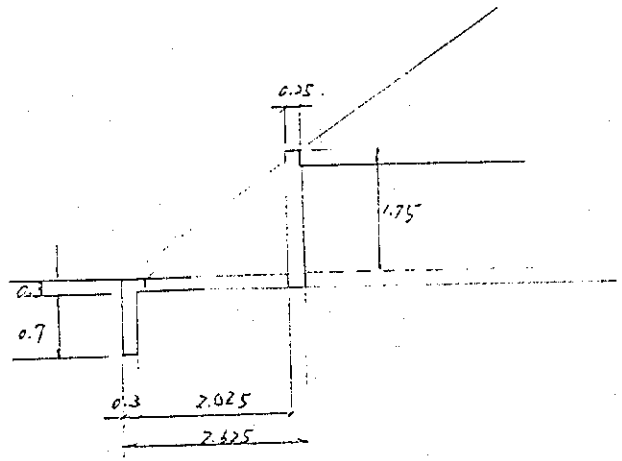

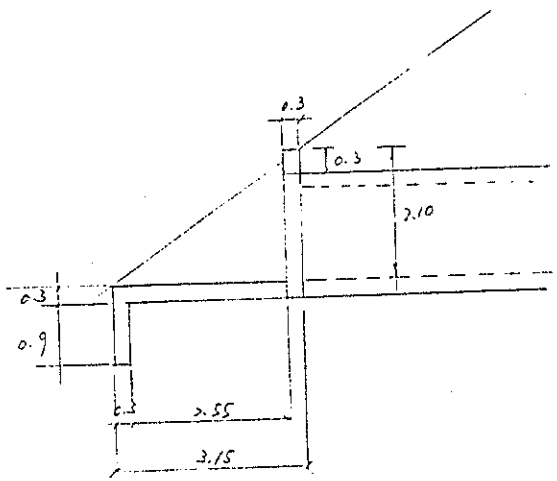

Working Division:

Description	Calculation Details	Unit	Quantity	Remarks
3 1/11	Concrete class H for levelling concrete			
	(wing wall)			
	3. 2.0 x 2.0 (I)			
	(wing) 0.3 x (4.056 x 2 + 3.95) x 0.1 = 0.362 m³			
	(slab) 2.6 x 3.33 x 0.1 = 0.866			
	1.228 m³			
	no.			
	4. 2.0 x 2.0 (II)			
	(wing) 0.3 x (4.237 x 2 + 3.80) x 0.1 = 0.368			
	(slab) 2.6 x 3.675 x 0.1 = 0.956			
	1.324 m³			
	1.324 x 2 x 2 = 5.296	m³	5.296	

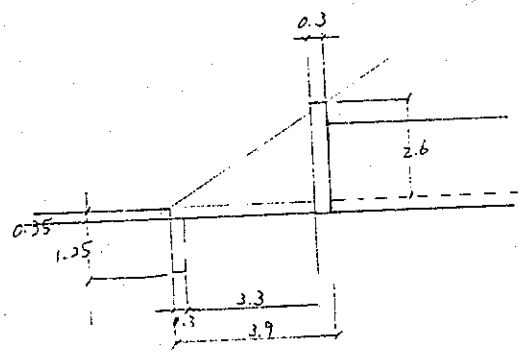

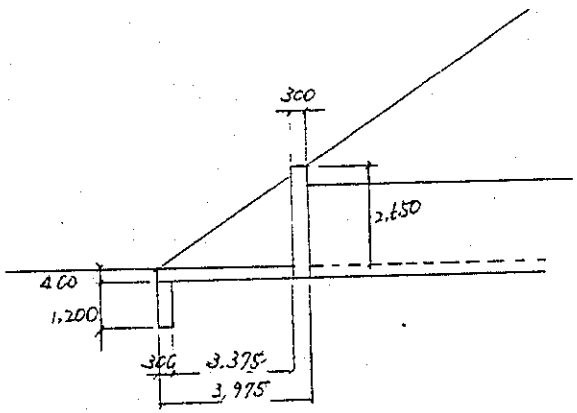

61-96

Working Division:

Description	Calculation Details	Unit	Quantity	Remarks
3 / 11	Concrete class H for levelling concrete			
	(Wing wall)			
	5 2.0x2.0m (III)			
	(wing) 0.35 x (4.417x2+3.65) x0.1 = 0.437			
	(slab) 2.7 x 3.7 x 0.1 = 0.999			
	1.436 m³			
	1.436 x 2 x 1 = 2.872	m³	2.872	
	6. 2.5 x 2.0 m (I)			
	(wing) 0.30 x (4.337x2+4.3) x0.1 = 0.383			
	(slab) 3.1 x 3.675 x 0.1 = 1.139			
	1.522 m³			
	1.522 x 2 x 1 = 3.044	m³	3.044	

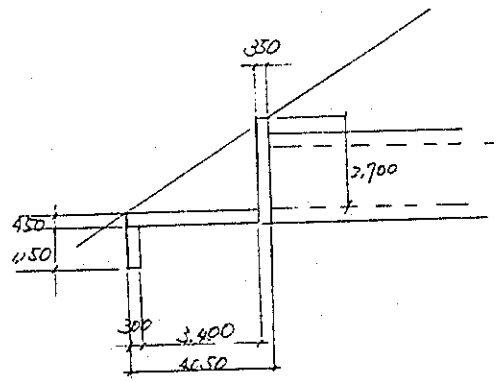

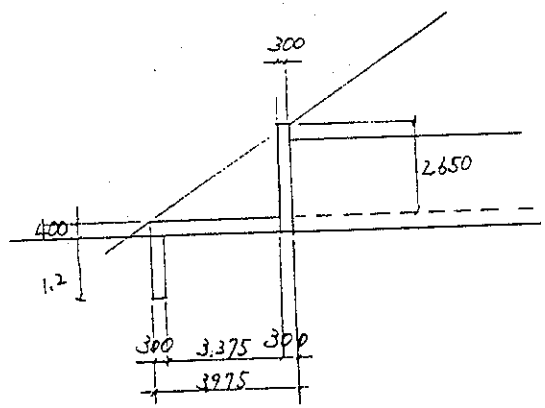

6-187

Working Division:

Description	Calculation Details	Unit	Quantity	Remarks
3 /11	Concrete class H for levelling concrete			
	(catch basin) per 1 no.			
	1.25 × 1.4 × 0.05 = 0.088 m^3			
	0.088 × 85 = 7.48	m^3	7.480	

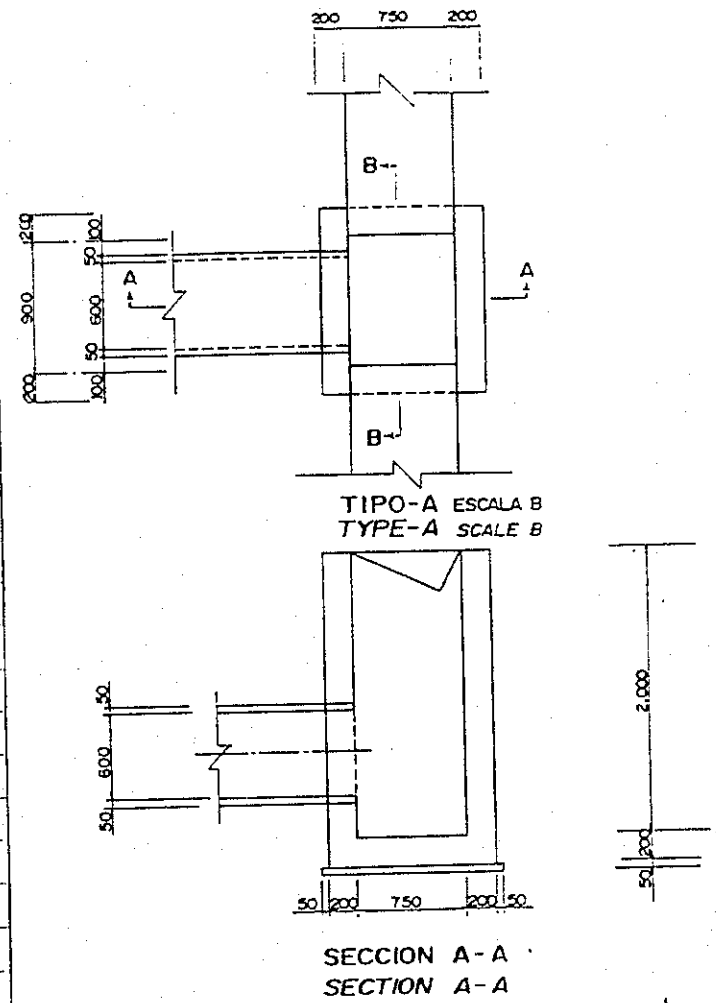

B1-9

Working Division:

Description	Calculation Details	Unit	Quantity	Remarks
.3 /12	Formwork, FI finish for concrete of item 109, 110 and 111			
	(wing wall).			
	1. ϕ 600.			
	ⓐ 1.1m × 0.95m = 1.045 m²			
	1.045 − (0.3+0.05)²π = 0.660 m²			
	ⓑ (0.15+1.125) × 0.65/2 × 2 = 0.829 m²			
	ⓒ 0.15 × 0.1 × 2 = 0.03 m²			
	ⓓ 0.2 × (1.1 + 1.125 × 2) + 1.1 × (0.4 + 0.2) = 1.33			
	ⓔ 1.1m × 1.0 m = 1.100 m²			
	1.100 − (0.3+0.05)² π = 0.715			
	ⓕ (0.15 + 1.20) × 0.7 × ½ × 2 = 0.945			
	ⓖ 0.15 × 0.1 × 2 = 0.03 m²			
	ⓗ 0.2 × (1.1 + 1.20 × 2) + 1.1 × (0.4 + 0.2) = 1.36			
	5.899 m²			
	5.899 × 4 = 23.596	m³	282.846	
	3.05 × 85 = 259.25			

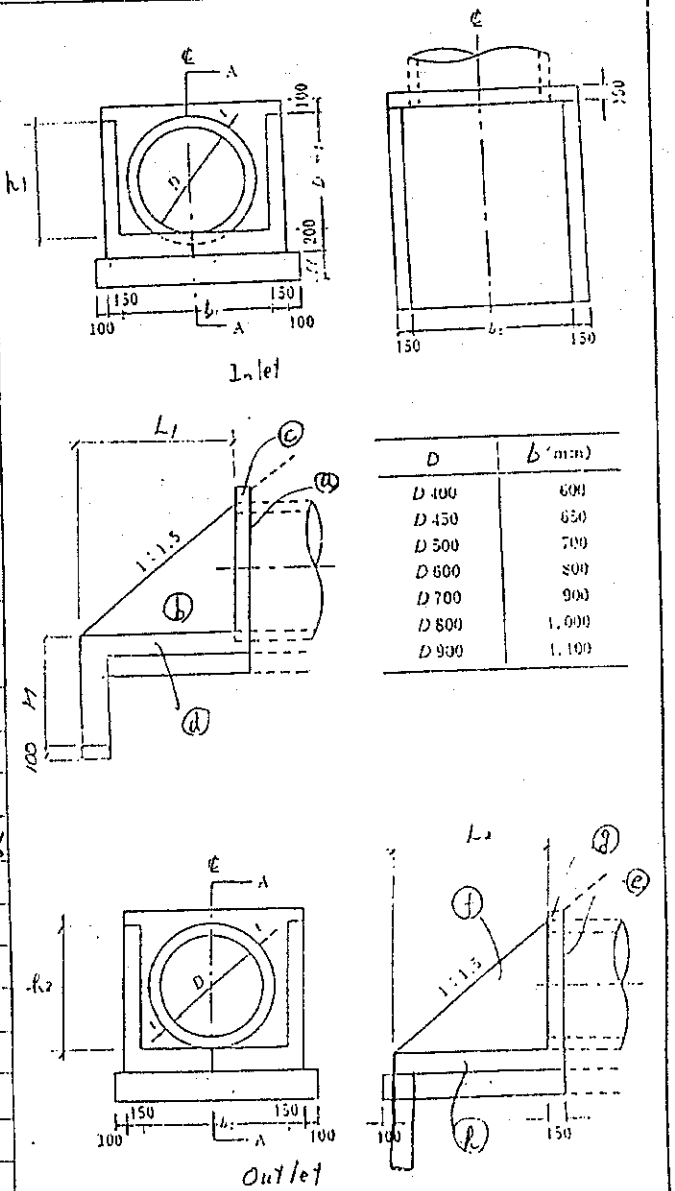

D	b (mm)
D 400	600
D 450	650
D 500	700
D 600	800
D 700	900
D 800	1,000
D 900	1,100

Working Division:

Description	Calculation Details	Unit	Quantity	Remarks
3 / 12	Formwork Fl finish			
	(wing wall)			
	2. Ø800			
	ⓐ 1.3 m × 1.166 m = 1.516			
	1.516 − (0.466)²π = 0.834 m²			
	ⓑ (0.15 + 1.449) × 0.866 × ½ × 2 = 1.385 m²			
	ⓒ 0.15 × 0.1 × 2 = 0.03			
	ⓓ 0.2 × (1.3 + 1.449 × 2) + 1.3 (0.6 + 0.4) = 2.140			
	ⓔ 1.3 × 1.232 = 1.602			
	1.602 − 0.466²π = 0.920 m²			
	ⓕ (0.15 + 1.548) × 0.932 × ½ × 2 = 1.583 m²			
	ⓖ 0.15 × 0.1 × 2 = 0.03			
	ⓓ 0.2 × (1.3 + 1.548 × 2) + 1.3 × (0.6 + 0.4) = 2.179			
	9.101 m²			
	9.101 × 7 = 63.707	m³	63.707	

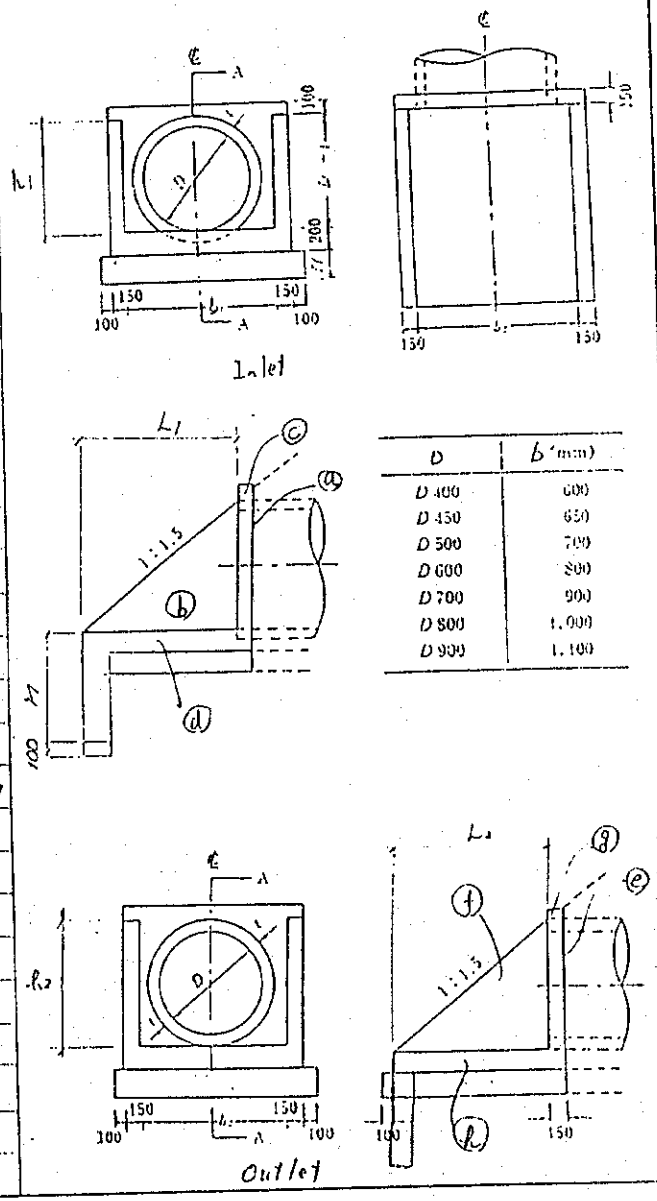

D	b (mm)
D 400	600
D 450	650
D 500	700
D 600	800
D 700	900
D 800	1,000
D 900	1,100

6-200

Working Division:

Description	Calculation Details	Unit	Quantity	Remarks
3 /12	Formwork, F1 finish			
	(wing wall)			
	3 Ø1,000			
	ⓐ 1.5 × 1.382 m = 2.073 m²			
	2.073 − 0.582²π = 1.009 m²			
	ⓑ (0.15 + 1.773) × 1.082 × ½ × 2 = 2.081 m²			
	ⓒ 0.15 × 0.1 × 2 = 0.03			
	ⓓ 0.2 × (1.5 + 1.773 × 2) + 1.5 × (0.8 + 0.6) = 3.909			
	ⓔ 1.5 × 1.464 = 2.196 m²			
	2.196 − 0.582²π = 1.132 m²			
	ⓕ (0.15 + 1.896) × 1.164 × ½ × 2 = 2.382 m²			
	ⓖ 0.15 × 0.1 × 2 = 0.03			
	ⓗ 0.2 × (1.5 + 1.896 × 2) + 1.5 × (0.8 + 0.6) = 3.158			
	13.731 m³			
	13.731 × 4 = 54.924	m³	54.924	

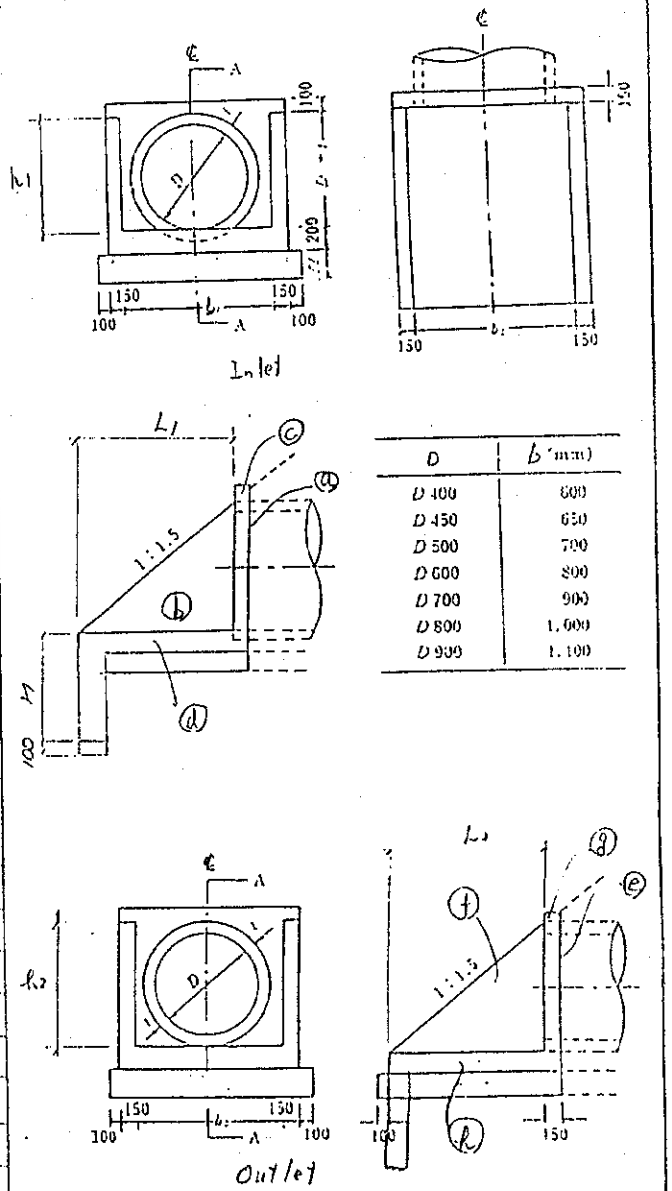

D	b (mm)
D 400	600
D 450	650
D 500	700
D 600	800
D 700	900
D 800	1,000
D 900	1,100

Working Division:

Description	Calculation Details	Unit	Quantity	Remarks
.3 1/12	Formwork F1 finish (wing wall)			
	1. 1.2 × 1.2 m			
	ⓐ (7.35 + 3.3) × 1.35 × 1/2 + 0.7 × 7.35 − 1.80 × 1.75 = 9.184 m²			
	ⓑ 0.7 × 0.25 × 2 = 0.35 m²			
	ⓒ (2.325 × 1.0 − 2.025 × 0.7) × 2 = 1.815 m²			
	ⓓ 1.0 × 1.75 = 1.75 m²			
	ⓔ 0.7 × 1.75 = 1.225 m²			
	14.324 m²			
	14.324 × 2 × 3 = 85.944	m³	85.944	
	2 1.5 × 1.5 m			
	ⓐ (8.7 + 3.45) × 1.75 × 1/2 + 0.7 × 8.7 − 2.1 × 2.15 = 12.206 m²			
	ⓑ 0.7 × 0.3 × 2 = 0.42 m²			
	ⓒ (2.85 × 1.2 − 2.55 × 0.9) × 2 = 2.250 m²			
	ⓓ 1.2 × 2.1 = 2.52 m²			
	ⓔ 0.9 × 2.1 = 1.89 m²			
	19.286 m²			
	19.286 × 2 × 4 = 154.288	m³	154.288	

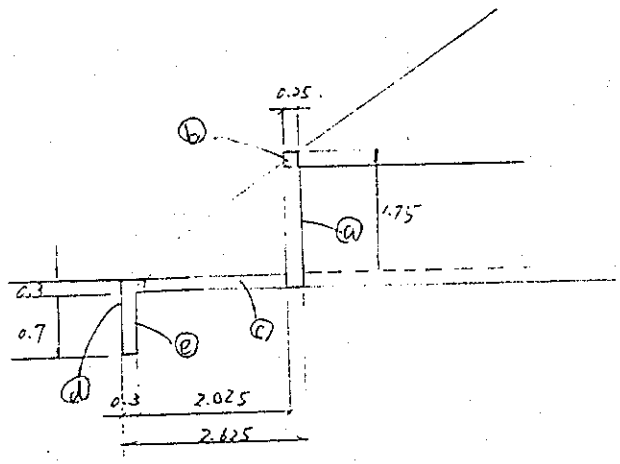

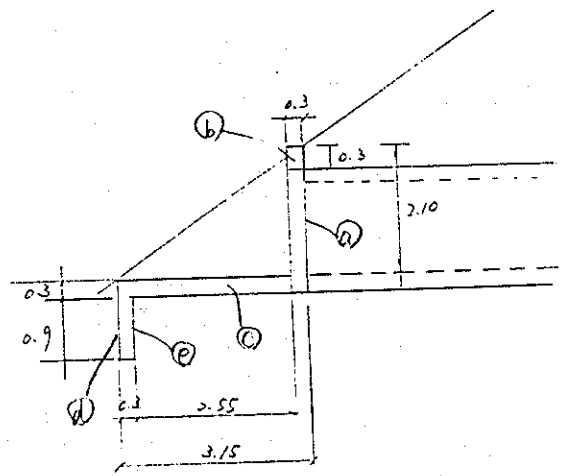

Working Division:

Description	Calculation Details	Unit	Quantity	Remarks
.3 /12	Formwork Fl finish			
	3. 2.0×2.0 m (I)			
	ⓐ (10.7+3.95)×2.25×½ + 0.7×10.7			
	−2.6×2.65 = 17.081 m²			
	ⓑ 0.7×0.3×2 = 0.42 m²			
	ⓒ (3.6×1.60−3.3×1.25)×2 = 3.270 m²			
	ⓓ 1.60×2.6 = 4.16 m²			
	ⓔ 1.25×2.6 = 3.25 m²			
	28.181 m²			
	120			
	4. 2.0×2.0 m (II)			
	ⓐ (10.85+3.8)×2.35×½ + 0.7×10.85			
	−2.6×2.75 = 17.659 m²			
	ⓑ (0.7×0.3×2 = 0.42 m²			
	ⓒ (3.675×1.6−3.375×1.2)×2 = 3.660 m²			
	ⓓ 1.6×2.6 = 4.16 m²			
	ⓔ 1.2×2.6 = 3.12 m²			
	29.019 m²			
	29.019 × 2 × 2 = 116.076	m³	116.076	

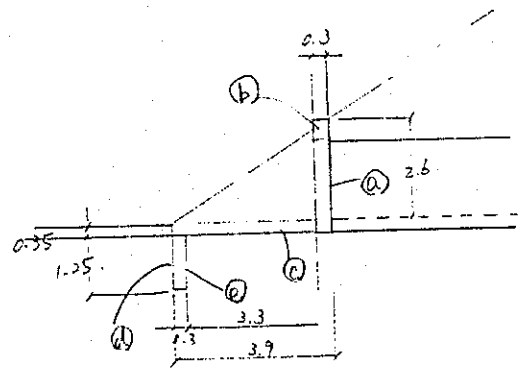

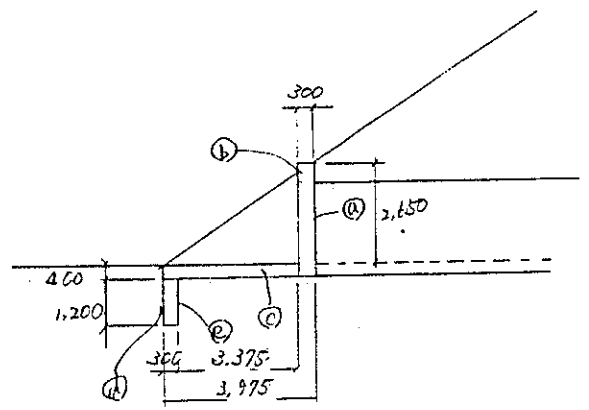

6-203

Working Division:

Description	Calculation Details	Unit	Quantity	Remarks
.3 / 12	Formwork Fl finish			
	5. 2.0 × 2.0 (III)			
	ⓐ (11.0 + 3.65) × 2.45 × 1/2 + 0.7 × 11.0			
	− 2.7 × 2.85 = 17.951 m²			
	ⓑ 0.7 × 0.35 × 2 = 0.49			
	ⓒ (3.70 × 1.6 − 3.4 × 1.15) × 2 = 4.02			
	ⓓ 1.6 × 2.7 = 4.32			
	ⓔ 1.15 × 2.7 = 3.105			
	29.886 m²			
	29.886 × 2 × 1 = 59.772	m³	59.772	
	6. 2.5 × 2.0 (I)			
	ⓐ (11.35 + 4.3) × 2.35 × 1/2 + 0.7 × 11.35			
	− 3.1 × 2.75 = 17.809			
	ⓑ 0.7 × 0.3 × 2 = 0.42			
	ⓒ (3.675 × 1.6 − 3.375 × 1.2) × 2 = 3.660			
	ⓓ 1.6 × 3.1 = 4.96			
	ⓔ 1.2 × 3.1 = 3.72			
	30.569 m²			
	30.569 × 2 × 1 = 61.138	m³	61.138	

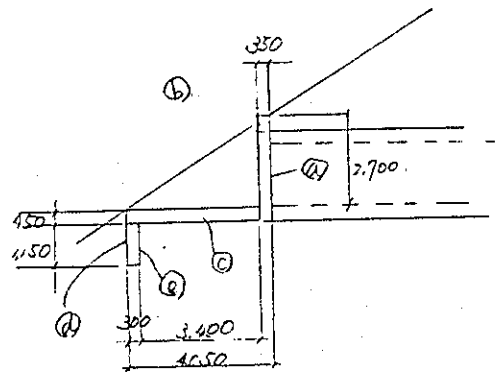

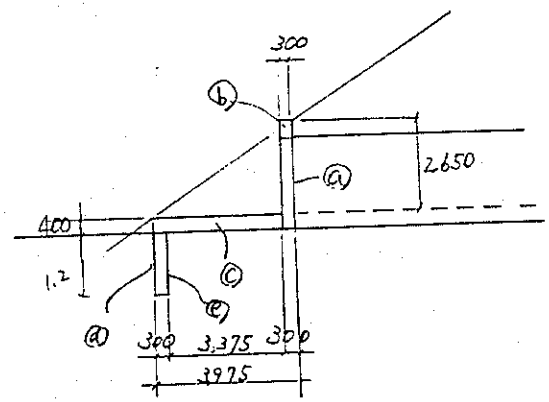

Working Division:

Description	Calculation Details	Unit	Quantity	Remarks
.3 /12	Formwork Fl finish			
	(Catch basin)			
	1.15 × 2.2 × 2 = 5.06			
	1.30 × 2.2 × 2 − 0.35²π = 5.335			
	10.395 m²			
	10.395 × 85 mm = 883.575	m²	883.575	

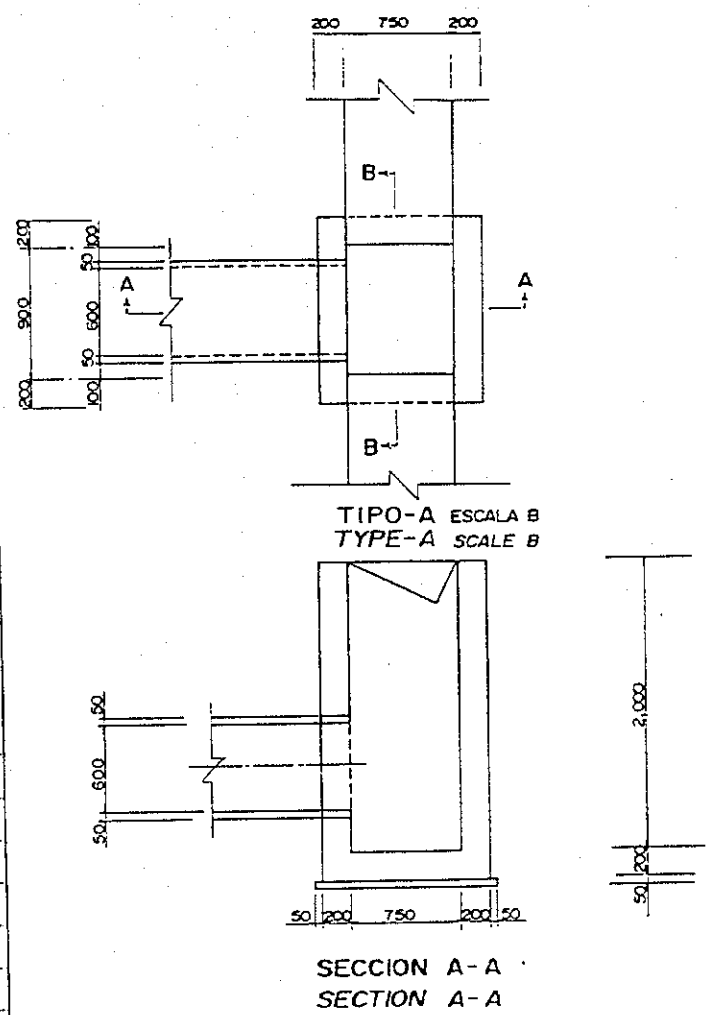

Working Division:

Description	Calculation Details	Unit	Quantity	Remarks
3 /13	Formwork F3 finish			
	(Wing wall)			
	1. φ600.			
	ⓐ 0.1×1.1 + 0.8×0.65 − 0.3²π = 0.347 m²			
	ⓑ 0.975×0.65×½×2 = 0.634 m²			
	ⓒ 0.1×1.1 + 0.8×0.70 − 0.3²π = 0.387 m²			
	ⓓ 1.05×0.70×½×2 = 0.735 m²			
	2.103 m²			
	2.103 × 4 = 8.412	m²	103.782	
	1.122 × 85 = 95.37			

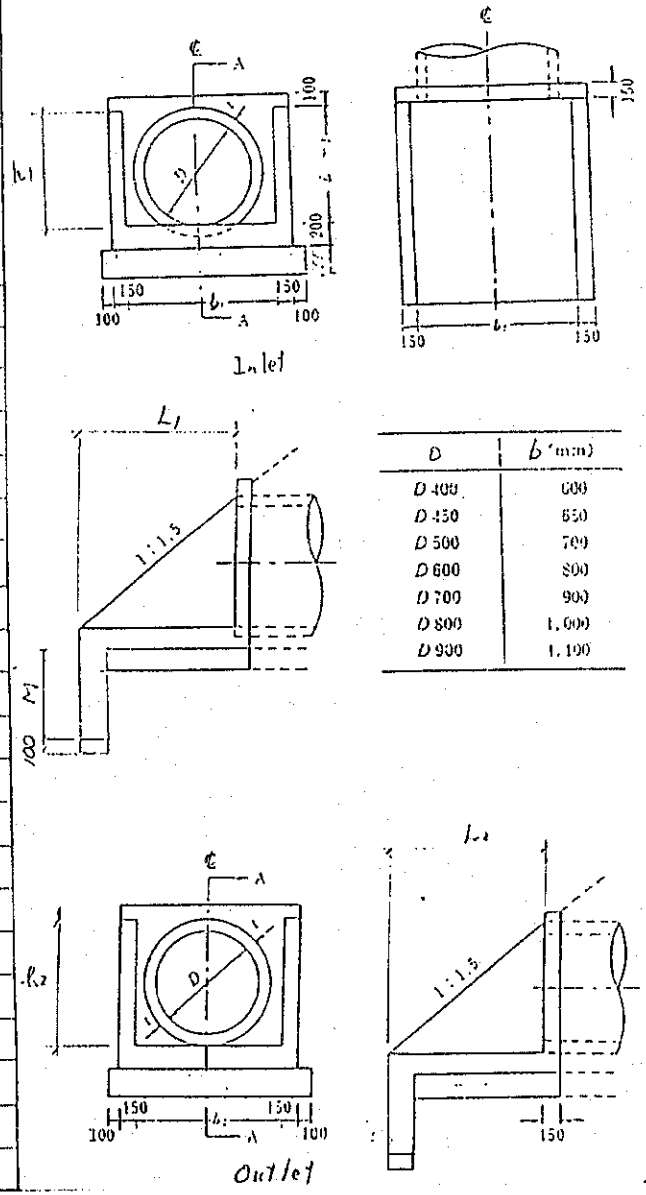

D	b (mm)
D 400	600
D 450	650
D 500	700
D 600	800
D 700	900
D 800	1,000
D 900	1,100

6-206

Working Division:

Description	Calculation Details	Unit	Quantity	Remarks
3 /13	Formwork, F3 finish (wing wall)			
	2 Ø800			
	ⓐ 0.1 × 1.3 + 1.0 × 0.866 − 0.4² π = 0.493 m²			
	ⓑ 1.399 × 0.866 × ½ × 2 = 1.125 m²			
	ⓒ 0.1 × 1.3 + 1.0 × 0.932 − 0.4² π = 0.559 m²			
	ⓓ 1.398 × 0.932 × ½ × 2 = 1.303 m²			
	3.480 m²			
	3.480 × 7 = 24.360	m²	24.360	

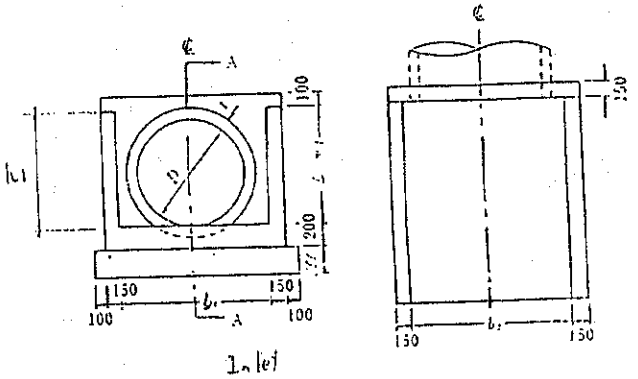

Inlet

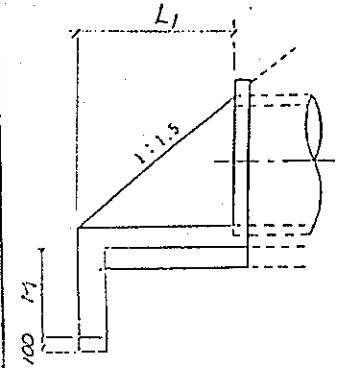

D	b (mm)
D 400	600
D 450	650
D 500	700
D 600	800
D 700	900
D 800	1,000
D 900	1,100

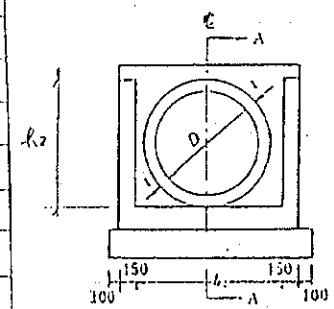

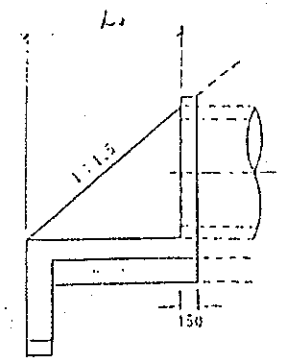

Outlet

Working Division:

Description	Calculation Details	Unit	Quantity	Remarks
1.3 / 13	Formwork, F3 finish (wing wall)			
	3. Ø 1,000			
	ⓐ 0.1 × 1.5 + 1.082 × 1.2 − 0.5²π = 0.663 m²			
	ⓑ 1.623 × 1.082 × ½ × 2 = 1.756 m²			
	ⓒ 0.1 × 1.5 + 1.2 × 1.164 − 0.5²π = 0.761 m²			
	ⓓ 1.746 × 1.164 × ½ × 2 = 2.032 m²			
	5.212 m²			
	5.212 × 4 = 20.848	m²	20.848	

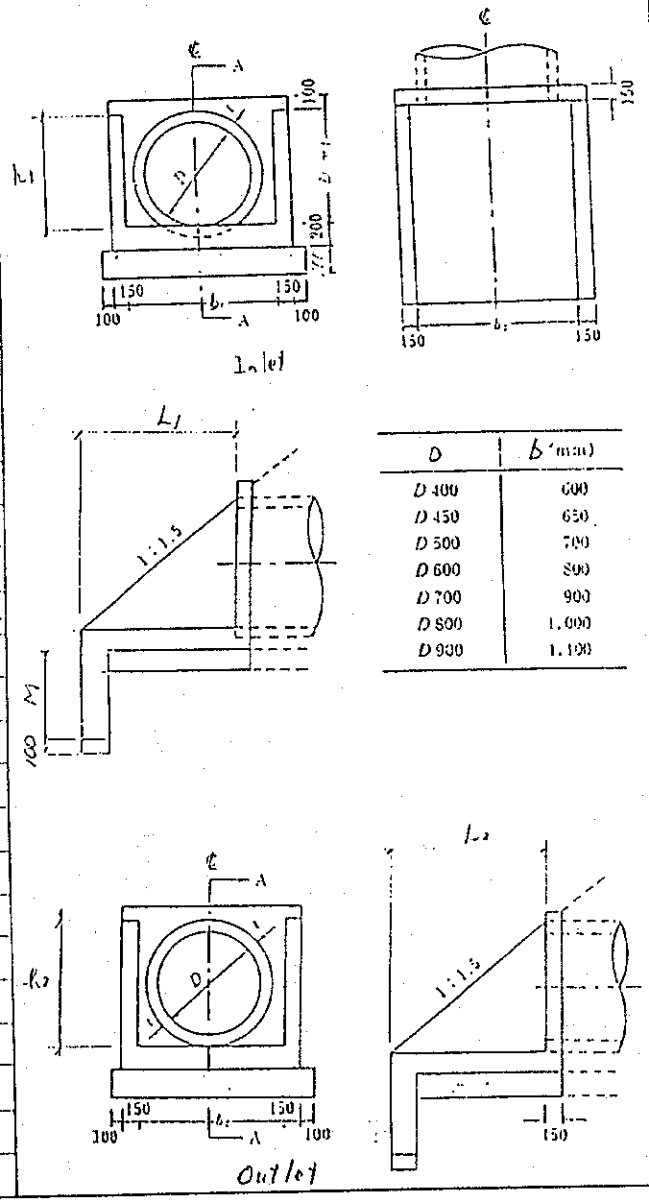

D	b (mm)
D 400	600
D 450	650
D 500	700
D 600	800
D 700	900
D 800	1,000
D 900	1,100

Working Division:

Description	Calculation Details	Unit	Quantity	Remarks
3 /13	Formwork, F3 finish (Wing wall)			
	1. 1.2 × 1.2 m			
	(3.3 + 7.35) × 1.35/2 + 0.7 × 7.35			
	− 1.2 × 1.2 = 10.894 m²			
	10.894 × 6 = 65.364	m²	65.364	
	2. 1.5 × 1.5 m			
	(3.45 + 8.7) × 1.75/2 + 0.7 × 8.7			
	− 1.5² = 14.471 m²			
	14.471 × 8 = 115.768	m²	115.768	
	3. 2.0 × 2.0 m (I)			
	(10.7 + 3.95) × 2.35/2 + 0.7 × 10.7			
	− 2.0² = 19.971 m²			
	no			
	4. 2.0 m × 2.0 m (II)			
	(10.85 + 3.80) × 2.35/2 + 0.7 × 10.85			
	− 2.0² = 19.869 m²			
	19.869 × 4 = 79.476	m²	79.476	

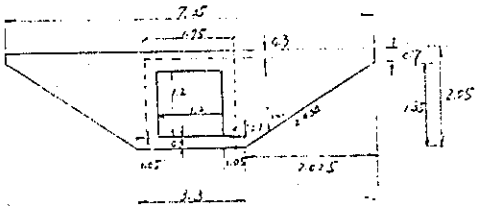

1.

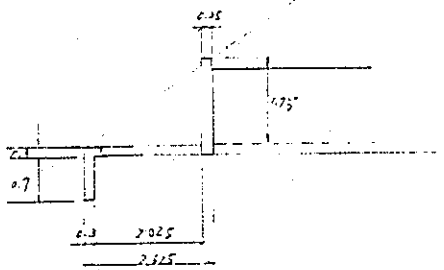

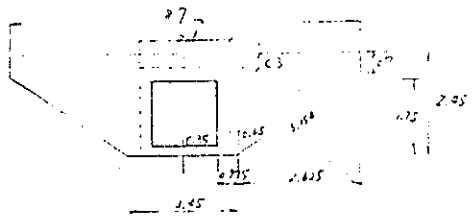

2.

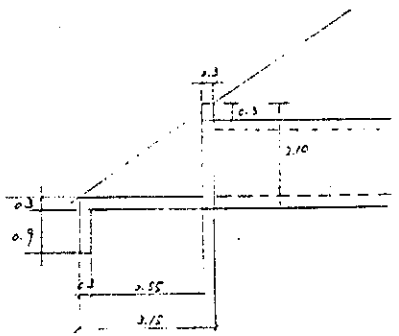

6-209

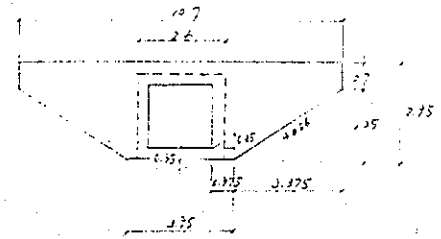

3.

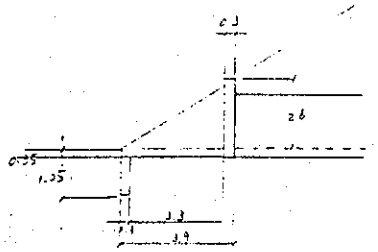

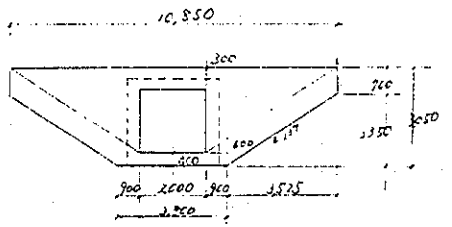

4

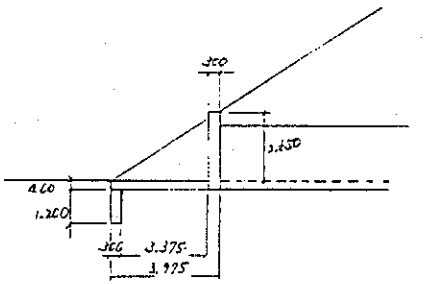

Working Division:

Description	Calculation Details	Unit	Quantity	Remarks
.3 /13	Formwork F3. finish (wing wall)			
	5. 2.0 x 2.0 m (III)			
	(11 + 3.65) x 2.45 x 1/2 + 0.7 x 11			
	− 2.0² = 21.646 m²			
	21.646 x 2 = 43.292	m²	43.292	
	6. 2.5 x 2.0 (I)			
	(11.35 + 4.3) x 2.35 x 1/2 + 0.7 x 11.35			
	− 2.5 x 2.0 = 21.334 m²			
	21.334 x 2 = 42.668	m²	42.668	
	7. 2.5 x 2.0 (II)			
	(11.5 + 4.15) x 2.4 x 1/2 + 0.7 x 11.5			
	− 2.5 x 2.0 = 21.830 m²			

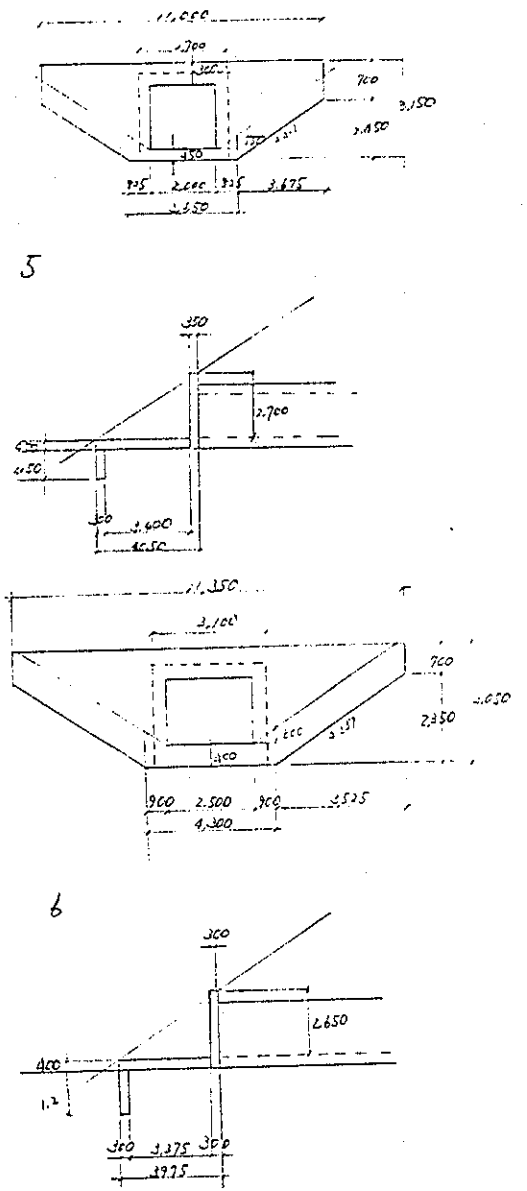

116 → 9

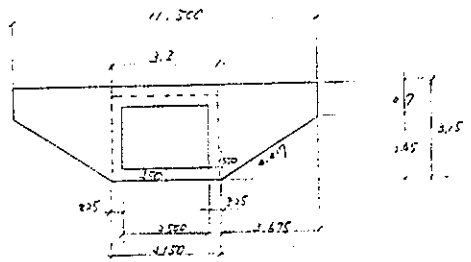

7

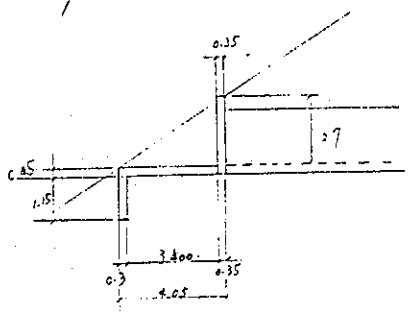

6 - 2/2

Working Division:

Description	Calculation Details	Unit	Quantity	Remarks
3 /13	Formwork F3 finish			
	(Catch basin)			
	0.75 × 2.0 × 2 = 3.0			
	0.90 × 2.0 × 2 − 0.37 = 3.317			
	6.317 m²			
	6.317 × 85 nos = 536.945	m²	536.945	

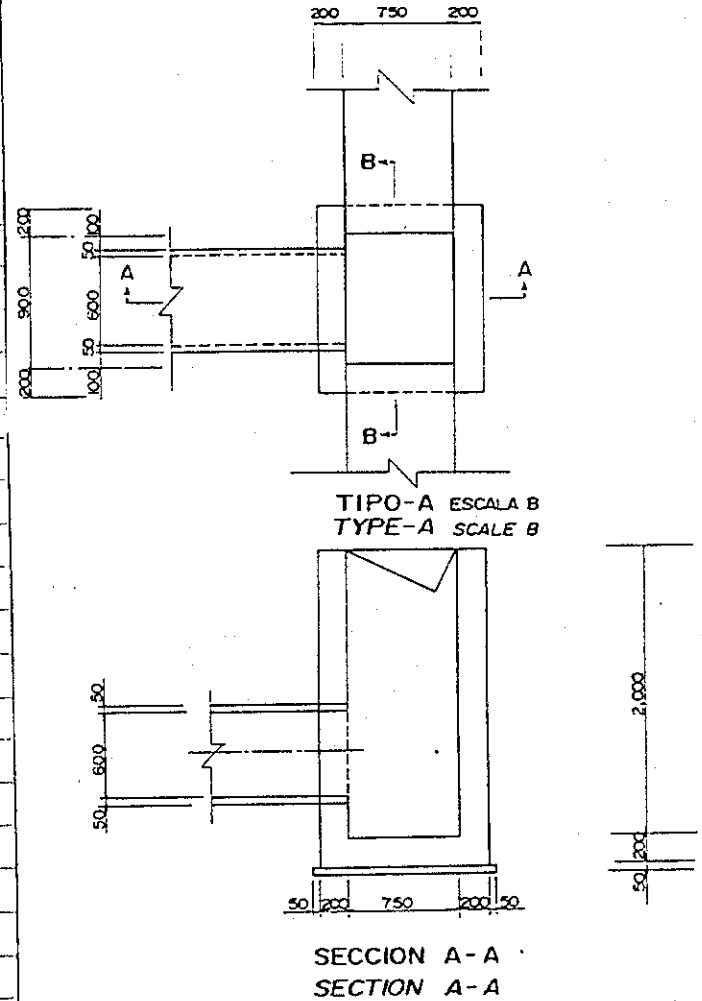

G-243

Working Division:

Description	Calculation Details	Unit	Quantity	Remarks
3 113	Formwork, F3 finish for concrete item 109 and 110.			
	(Side ditch). per 1m.			
	0.671 + 0.335 = 1.006 m²			
	1.006 × 15889.88 = 15,985.219		15,985.219	

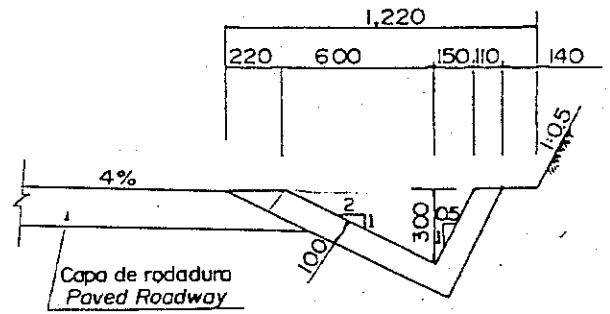

6-214

Working Division:

Description	Calculation Details	Unit	Quantity	Remarks
1. 3 1/4	Reinforcing bars for concrete works			
	(wing wall)			
	80 kg / 1 m³ of concrete volume			
	1. ø 600			
	1.237 m³ × 80 = 98.96 kg			
	98.96 × 4 = 395.840 //	Ton	5.6	
	0.77 × 80 × 85 = 5536) 5631.84			
	2. ø 800			
	2.000 m³ × 80 = 160 kg			
	160 × 7 = 1.12	ton	1.1	
	3 ø1,000			
	2.939 m³ × 80 = 235.12 kg			
	235.12 × 4 = 940.48	ton	1.0	

Working Division:

Description	Calculation Details	Unit	Quantity	Remarks
3 114	Reinforcing bars for concrete works (wing wall)			
	80 kg / m³ of concrete volume			
	1 1.2×1.2 m			
	4.312 × 80 = 329.6 kg			
	329.6 × 2 × 3 = 1977.6	Ton	2.0	
	2 1.5×1.5 m			
	6.704 × 80 = 536.32 kg			
	536.32 × 2 × 4 = 4290.56	Ton	4.3	
	3 2.0×2.0 m (I)			
	10.242 × 80 = 819.36 kg			
	~~ho~~			
	4 2.0×2.0 m (II)			
	11.001 × 80 = 880.08 kg			
	880.08 × 2 × 2 = 3520.32	Ton	3.5	
	5 2.0×2.0 m (III)			
	13.004 × 80 = 1040.32 kg	Ton	2.1	
	1040.32 × 2 × 1 =			

6-216

Working Division:

Description	Calculation Details	Unit	Quantity	Remarks
3 1.14	Reinforcing bars for concrete works (Wing wall)			
	6. 2.5 x 2.0 m (I)	Ton	1.9	
	12.073 x 80 = 965.84 kg			
	965.84 x 2 x 1 = 1,931.68			
	7 2.5 x 2.0 m (II)			
	~~no~~			

6-2/7

Working Division:

Description	Calculation Details	Unit	Quantity	Remarks
3 114	Reinforcing bars for concrete works			
	(Catch basin)			
	80 kg per 1 m³ of concrete volume	ton	1.3	
	∴ 1.862 m³ × 80 kg/m³ = 148.96 ~~m³~~ ton			
	148.96 × 85 = 12661.6			

6-218

Working Division:

Description	Calculation Details	Unit	Quantity
.3 1/15	Gabion mattress, t = 500 mm		
	(Wing wall part)		
	1. Ø600		
	(0.8 + 0.3) × 5.0 × 0.5 = 2.75 m³	m³	68.750
	2.75 × 2 × 4 = 22.0		
	2.75 × 0.2 × 85 = 46.75		
	2. Ø800		
	(1.0 + 0.3) × 5.0 × 0.5 = 3.25 m³		
	3.25 × 2 × 7 = 45.5	m³	45.500
	3. Ø1,000		
	(1.2 + 0.3) × 5.0 × 0.5 = 3.75 m³	m³	30.000
	3.75 × 2 × 4 = 30.0		
	4. 1.2 × 1.2 m		
	(2.434 × 2 + 3.3) × 5.0 × 0.5 = 20.42 m³	m³	122.520
	20.42 × 2 × 3 = 122.52		
	5. 1.5 × 1.5 m		
	(3.154 × 2 + 3.45) × 5.0 × 0.5 = 24.395 m³	m³	195.160
	24.395 × 2 × 4 = 195.16		

Remarks

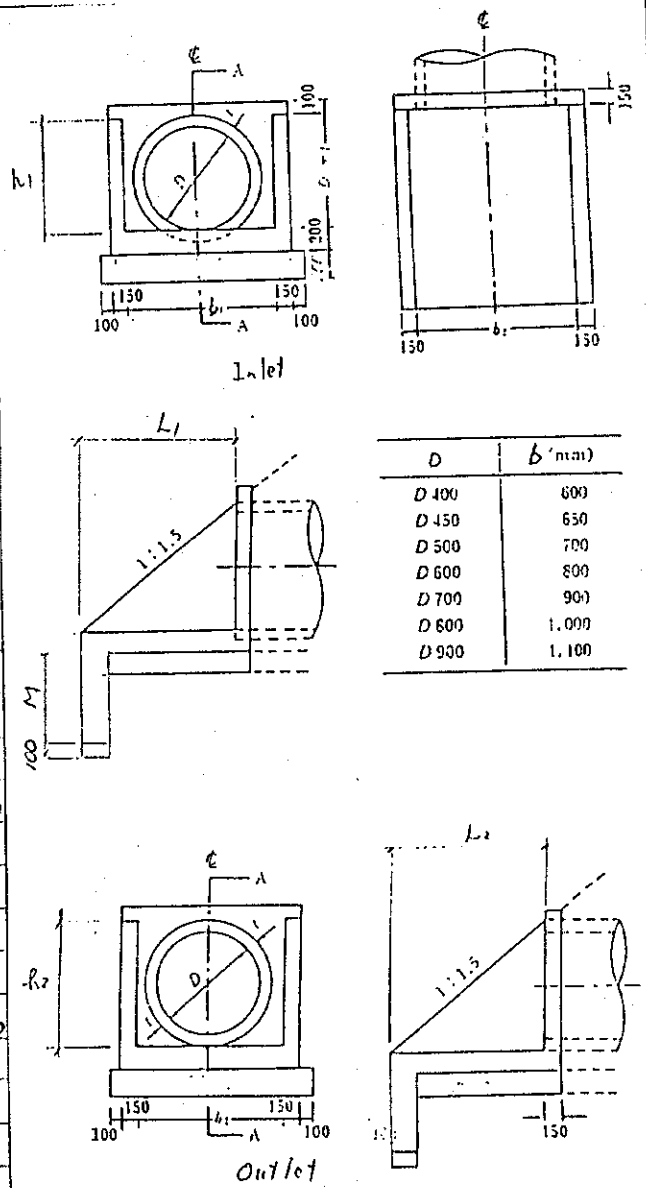

D	b (mm)
D 400	600
D 450	650
D 500	700
D 600	800
D 700	900
D 800	1,000
D 900	1,100

6-2/9

Working Division:

Description	Calculation Details	Unit	Quantity	Remarks
.3 /15	Gabion mattress, t = 500 mm. (Wing wall)			
	6. 2.0×2.0 (I) (4.056×2+3.95)×5.0×0.5 = 30.155 m³ no			
	7. 2.0×2.0 (II) (4.237×2+3.8)×5.0×0.5 = 30.685 m³ 30.685×2×2 = 122.740	m³	122.740	
	8. 2.0×2.0 (III) (4.417×2+3.65)×5.0×0.5 = 31.21 m³ 31.21×2×1 = 62.42	m³	62.420	
	9. 2.5×2.0 (I) (4.237×2+4.3)×5.0×0.5 = 31.935 m³ 31.935×2×1 = 63.87	m³	63.870	
	10. 2.5×2.0 (II) (4.417×2+4.15)×5.0×0.5 = 32.46 m³ no			

4

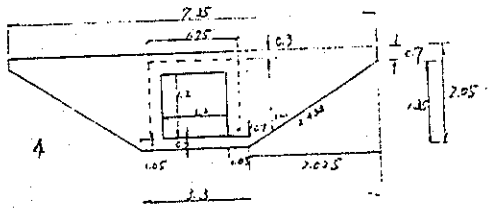

5.

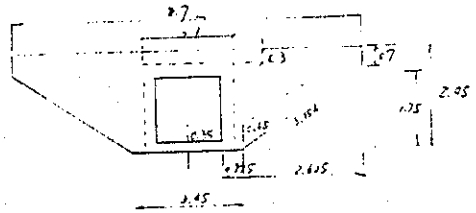

6.

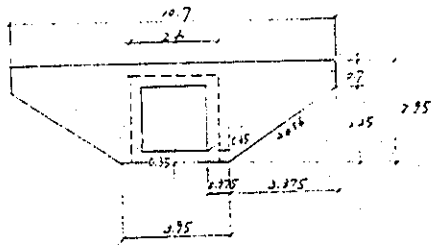

7.

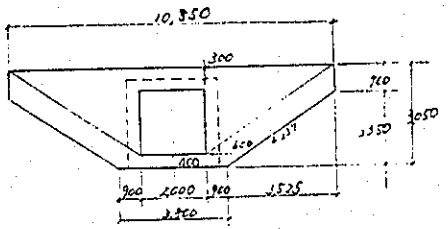

8.

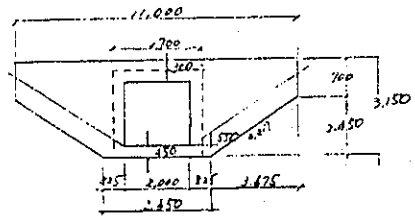
11,000
700
300
900
3,150
2,450
350
570
225
2,000
225
2,675
4,450

9

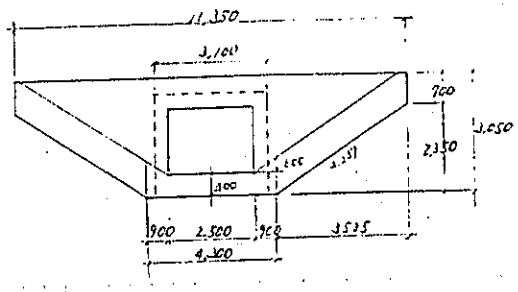
11,350
3,100
900
3,050
2,350
400
900
2,500
900
3,525
4,300

10

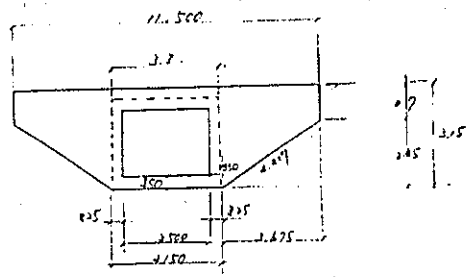
11,500
3,7
3,5
2,45
350
225
225
2,500
2,675
4,150

6-22/

Working Division:

Description	Calculation Details	Unit	Quantity	Remarks
3 116	Joint Filler, t=10 mm			
	<Culvert>			
	1. 1.2 x 1.2 m			
	1.75 x 1.70 - 1.2 x 1.2 = 1.535 m²	m²	9.210	
	1.535 x 6 = 9.21			
	2. 1.5 x 1.5 m			
	2.1 x 2.15 - 1.5 x 1.5 = 2.265 m²	m²	11.325	
	2.265 x 5 = 11.325			
	3. 2.0 x 2.0 m (I)			
	2.6 x 2.65 - 2 x 2 = 2.890 m²			
	no			
	4. 2.0 x 2.0 m (II)			
	2.6 x 2.75 - 2 x 2 = 3.15 m²	m²	6.30	
	3.15 x 2 = 6.30			
	5. 2.0 x 2.0 m (III)			
	2.7 x 2.85 - 2 x 2 = 3.695 m²	m²	7.39	
	3.695 x 2 = 7.39			

1.

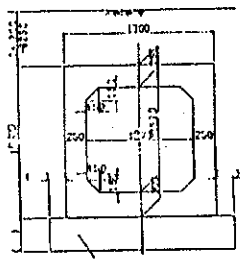

2.

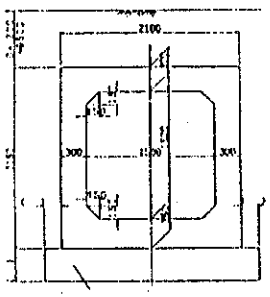

3.

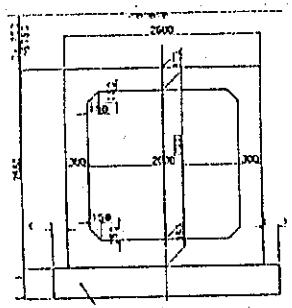

4.

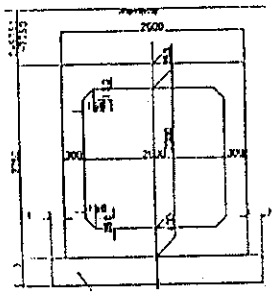

5.

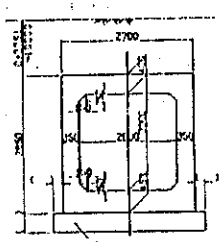

Working Division:

Description	Calculation Details	Unit	Quantity	Remarks
.3 /17	Bituminous coating for contraction joint			
	<Culvert>:			
	1. 1.2 x 1.2 m			
	1.75 x 1.70 - 1.2 x 1.2 = 1.535 m²	m²	9.210	
	1.535 x 6 = 9.210			
	2. 1.5 x 1.5 m			
	2.1 x 2.15 - 1.5 x 1.5 = 2.265 m²	m²	18.120	
	2.265 x 8 = 18.120			
	3. 2.0 x 2.0 m (I)			
	2.6 x 2.65 - 2 x 2 = 2.89 m²			
	no			
	4. 2.0 x 2.0 m (II)			
	2.6 x 2.75 - 2 x 2 = 3.15 m²	m²	12.600	
	3.15 x 4 = 12.6			
	5. 2.0 x 2.0 m (III)			
	2.7 x 2.85 - 2 x 2 = 3.695 m²	m²	7.390	
	3.695 x 2 = 7.390			

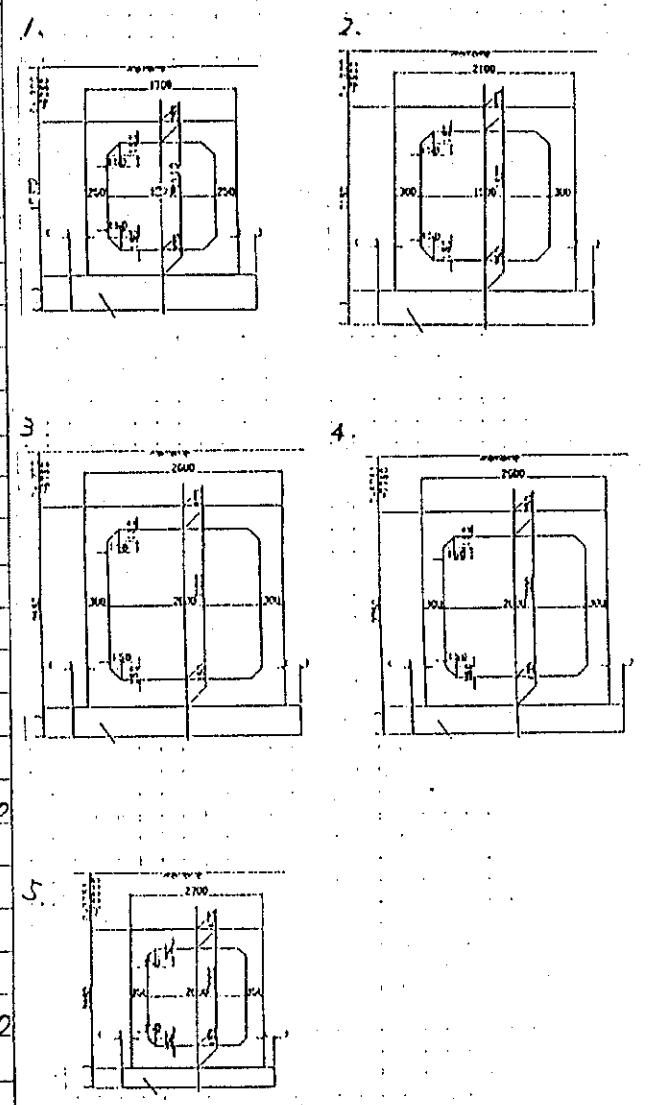

Working Division:

Description	Calculation Details	Unit	Quantity	Remarks
.3 117	6. 2.5 x 2.0 (I)			
	3.1 x 2.75 - 2.5 x 2 = 3.525 m²	m²	7.05	6. 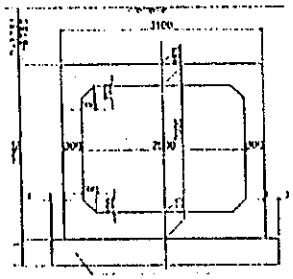
	3.525 x 2 = 7.05			
	7. 2.5 x 2.0 (II)			
	3.2 x 2.85 - 2.5 x 2 = 4.120 m²			7. 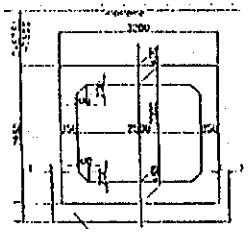
	120			

Working Division: 162. POZA HONDA

Description	Calculation Details	Unit	Quantity	Remarks
11.2.	Box culverts			
105	Open-cut excavation	m^3	0	
106	Backfill with selected material	m^3	0	
107	Free draining backfill	m^3	0	
108	Gravel bedding	m^3	0	

Working Division: 16. POZA HONDA INLET ACCESS ROAD

Description	Calculation Details	Unit	Quantity	Remarks
16.3	CULVERT AND DRAINAGE WORKS			
101	Open-cut excavation, all classes	m^3	288.288	→ 289
	1. Pipe culvert 135.37			
	2. Box culvert 0			
	3. Drain pipe 64.010			
	4. Catch basin 88.848			
	Total 288.288			
102	Backfill with selected material	m^3	137.85	→ 138
	1. Pipe culvert 59.13			
	2. Box culvert 0			
	3. Catch basin 78.720			
	Total 137.85			
103	Crushed stone bedding	m^3	28.66	→ 29
	1. Pipe culvert			

Working Division:

Description	Calculation Details	Unit	Quantity	Remarks
.3	CULVERT AND DRAINAGE WORKS			
104	Reinforced concrete pipe, D.600 mm Culvert : 100.7 m, For ditch 31.5 m	m	132.200	→ 133
105	Reinforced concrete pipe, D.800 mm	m	0	
106	Reinforced concrete pipe, D.1,000 mm	m	0	
107	P.V.C. perforated drain pipe D.200 mm	m	266.710	→ 267
108	Free drainage material for subdrain	m^3	55.636	→ 56
109	Concrete, class E. for pipe culvert and wing walls	m^3	72.891	→ 73
	1. Pipe culvert 66.87			
	2. Box culvert 0			
	3. Wing wall for pipe culvert 6.021			
	4. Wing wall for box culvert 0			
	Total 72.891			
110	Concrete, class F. for side ditch and catch basin	m^3	95.610	→ 96
	1. Side ditch 90.024			
	2. catch basin 5.586			
	Total			

6-224

Working Division:

Description	Calculation Details	Unit	Quantity	Remarks
3	CULVERT AND DRAINAGE WORKS			
111	Concrete, class H, for levelling concrete	m^3	1.428	→ 2
	1. Culvert 0.0			
	2. Wing wall 1.164			
	3. Catch basin 0.264			
	Total 1.428			
112	Form work, F1 finish, for concrete of Items 109 and 110	m^2	275.812	→ 276
	1. culvert 217.78			
	2. Wing wall 26.847			
	3. Catch basin 31.185			
	Total 275.812			
113	Formwork, F3 finish, for concrete of Items 109 and 110	m^2	777.09	→ 777
	1. Culvert 0.0			
	2. Wing wall 9.675			
	3. Catch basin 18.951			
	4. Drain ditch 748.464			
	Total 777.09			

6-220

Working Division:

Description	Calculation Details	Unit	Quantity	Remarks
3.	CULVERT AND DRAINAGE WORKS			
1/4	Reinforcing bars for concrete works	ton	5.3	→ 6
	1. Culvert 4328.49			
	2. Wing wall 481.68			
	3. Catch basin 446.88			
	Total 5257.05			
1/5	Gabion matlress, t = 500 mm	m^3	18.15	→ 18.
1/6	Joint filler, t = 10 mm	m^2	0.0	
1/7	Bituminous coating for contraction joint	m^2	0.0	

Working Division: 4

Description	Calculation Details	Unit	Quantity	Remarks
H 4	CONCRETE WORKS			
103	Concrete class E for box culverts	m^3	0	
104	Concrete class H for levelling concrete	m^3	0	
106	Formwork F1 finish for concrete item 103, 104	m^2	0	
108	Formwork F3 finish for concrete item 103	m^2	0	
109	Reinforcing bars for concrete works	Ton	0	
110	Joint filler for culvert	m^2	0	
112	Bituminous coating for contraction joint	m^2	0	

変更101

5 POZA HONDA INLET

Sr. No	St No.	Q m3/s	I	Entrance El m	Exit El m	Road El m	Culvert Length m	Type		Soil Thickness m
D-1	0+049.50	0.48	8.0%	162.250	159.794	168.287	30.700	D=600mm	360°	6.665
D-2	0+402.00	0.72	5.0%	130.300	128.870	136.840	28.600	D=600mm	360°	6.655
D-3	0+493.91	0.91	5.0%	119.300	117.230	129.398	41.400	D=600mm	360	10.533

100.700

		(m)	(nos)
D600	360°	100.7	3

6-231

5. Poza Hoda

		Length	Pipe Length	Open Cut Excavation (12.3/01)		Backfill (12.3/02)		Crushed Stone Bedding (12.3 /03)		Pipe D=600 (12.3/04)	Pipe D=800 (12.3/05)	Pipe D=1000 (12.3/06)	Concrete Class E (12.3/09)		Form Work F1 (12.3/12)		Reinforced Bar (12.3/14)	
		Unit (m)	Unit (m)	Unit (m3)	Total	Unit (m3)	Total	Unit (m3)	Total	Unit (m)	Unit (m)	Unit (m)	Unit (m3)	Total	Unit (m2)	Total	Unit (kg)	Total
D=600mm	90	31.5	132.2	0.83	26.11	0.43	13.56	0.14	4.49				0.16	4.92	0.52	16.38	0.00	0.00
	180	0.0		0.93	0.00	0.42	0.00	0.17	0.00				0.26	0.00	1.00	0.00	0.00	0.00
	Fix	100.7		1.09	109.26	0.45	45.57	0.24	24.17				0.62	61.95	2.00	201.40	42.98	4,328.49
D=800mm	90	0.0	0.0	1.28	0.00	0.58	0.00	0.17	0.00				0.26	0.00	0.68	0.00	0.00	0.00
	180	0.0		1.48	0.00	0.56	0.00	0.21	0.00				0.46	0.00	1.34	0.00	0.00	0.00
	Fix	0.0		1.72	0.00	0.60	0.00	0.31	0.00				1.11	0.00	2.68	0.00	73.53	0.00
D=1000mm	90	0.0	0.0	1.90	0.00	0.73	0.00	0.28	0.00				0.35	0.00	0.76	0.00	0.00	0.00
	180	0.0		2.12	0.00	0.72	0.00	0.33	0.00				0.60	0.00	1.58	0.00	0.00	0.00
	Fix	0.0		2.22	0.00	0.71	0.00	0.36	0.00				1.43	0.00	3.16	0.00	84.55	0.00
Total		132.2			135.37		59.13		28.66	132.20	0.00	0.00		66.87		217.78		4,328.49

6-332

		Length	Open Cut Excavation (12.2/07)		Backfill (12.2/06)		Concrete Class E (Item12.4/03)		Concrete Class H (Item12.4/04)		Form Work F1 (Item12.4/06)		Form Work F3 (Item12.4/08)		Reinforced Bar (12.4/09)	
		Unit (m)	Unit (m3)	Total	Unit (m3)	Total	Unit (m3)	Total	Unit (m3)	Total	Unit (m2)	Total	Unit (m2)	Total	Unit (kg)	Total
1200mm x 1200mm	~9.25	0.0	2.42	0.00	0.77	0.00	1.63	0.00	0.19	0.00	3.60	0.00	3.70	0.00	162.91	0.00
1500mm x 1500mm	~9.5	0.0	3.36	0.00	0.96	0.00	2.31	0.00	0.22	0.00	4.30	0.00	4.45	0.00	193.31	0.00
2000mm x 2000mm	~5.75	0.0	4.97	0.00	1.25	0.00	2.94	0.00	0.27	0.00	5.30	0.00	5.95	0.00	232.36	0.00
2000mm x 2000mm	~7.75	0.0	5.18	0.00	1.31	0.00	3.20	0.00	0.27	0.00	5.50	0.00	5.95	0.00	236.02	0.00
2000mm x 2000mm	7.751~	0.0	5.54	0.00	1.37	0.00	3.74	0.00	0.28	0.00	5.70	0.00	5.95	0.00	270.47	0.00
2500mm x 2000mm	3.75~5.75	0.0	5.93	0.00	1.31	0.00	3.61	0.00	0.32	0.00	5.50	0.00	6.43	0.00	317.29	0.00
2500mm x 2000mm	5.751~	0.0	6.32	0.00	1.37	0.00	4.20	0.00	0.32	0.00	5.70	0.00	6.43	0.00	331.62	0.00
Total		0.0		0.00		0.00		0.00		0.00		0.00		0.00		0.00

LONGITUD DE CUNETAS

CAMINO DE ACCESO: ENTRADA A POZA HOND KMS: 0+000 a 0+592.00 Km

	ABSCISAS		IZQUIERDA	DERECHA	LONGITUD
8.0	0+000.00 - 0+060.00		20.00	20.00	40.00
	0+020.00 - 0+080.00		40.00	0.00	40.00
	0+080.00 - 0+190.00		130.00	130.00	260.00
12.0	0+190.00 - 0+360.00		0.00	170.00	170.00
	0+360.00 - 0+400.00	✓	40.00	0.00	40.00
	0+480.00 - 0+480.00	✓	20.00	0.00	20.00
	0+500.00 - 0+540.00		40.00	0.00	40.00
11.5	0+540.00 - 0+592.00	✓	52.00	52.00	104.00
				LONG. TOTAL:	714.00

Total Length 714.00

Additions 10×3 = 30 744.00

Catch basin 3 nos

Ø 600 31.5 m.

Drain Pipe Quantities

Access Road Name	Length (m)	Excavation (m3)		P.V.C Pipe D=200mm (m)		Drainage Material (m3)	
		Per meter	Total		Total	Per meter	Total
Conguillo	5,823.120	0.240	1,397.549		5,823.120	0.209	1,214.703
Severno Tramo1	1,535.870	0.240	368.609		1,535.870	0.209	320.382
Severno Tramo2	2,472.920	0.240	593.501		2,472.920	0.209	515.851
Los Cuyuyes	7,324.030	0.240	1,757.767		7,324.030	0.209	1,527.793
Poza Honda	266.710	0.240	64.010		266.710	0.209	55.636
La Seca	2,035.376	0.240	488.490		2,035.376	0.209	424.579
El Guasmo	786.460	0.240	188.750		786.460	0.209	164.056
Cana Dulce	1,200.560	0.240	288.134		1,200.560	0.209	250.437
Membrillo Outlet	30.000	0.240	7.200		30.000	0.209	6.258
Grand Total			5,154.011		21,475.046		4,479.695

Excavation V=(0.8+0.4)*0.4/2 =0.24

Free Drainage Material V=0.24-3.14*0.1^2 =0.21

6-23C

Working Division:

Description	Calculation Details	Unit	Quantity	Remarks
.3 101	Open-cut excavation, all classes (Catch basin)			
	2.25 × 2.4 m = 5.4 m³			
	4.5 × 4.65 m = 20.925 m³			
	(5.4 + 20.925) × 1/2 × 2.25 = 29.616 m³			
	29.616 × 3 = 88.848	m³	88.848	

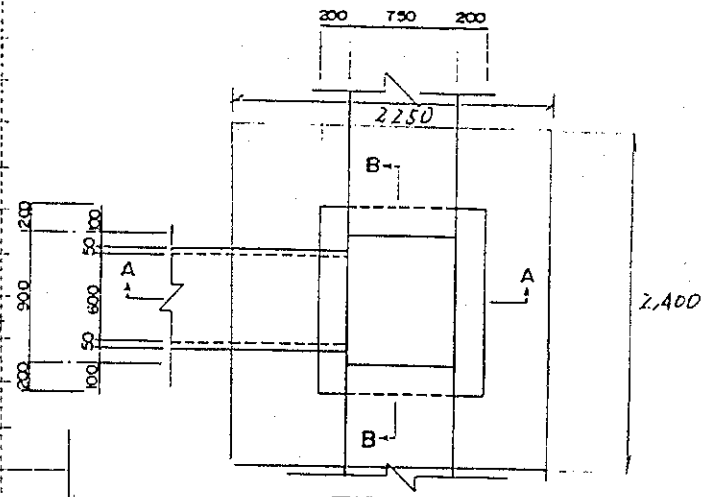

TIPO-A ESCALA B
TYPE-A SCALE B

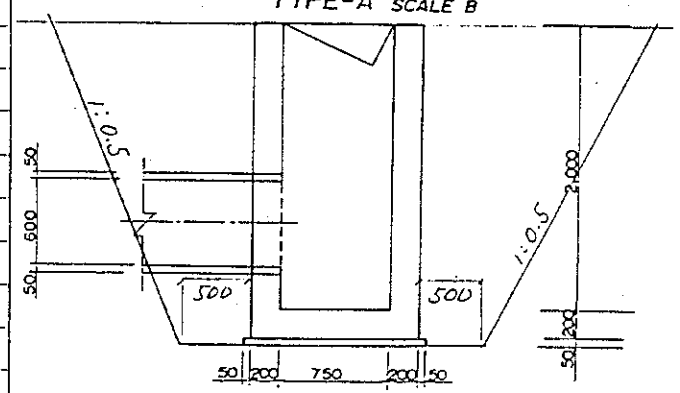

SECCION A-A
SECTION A-A

6-23F

Working Division:

Description	Calculation Details	Unit	Quantity	Remarks
3 102	Backfill with selected material			
	<catch basin>			
	29.616 − 1.15 × 1.3 × 2.2 − 1.25 × 1.4 × 0.05 = 26.240			
	26.240 × 3 = 78.72	m^3	78.720	

Working Division:

Description	Calculation Details	Unit	Quantity	Remarks
3 109	Concrete dam E for			
	(wing wall)			
	(pipe type)			
	1. ø 600 (h_1 = 650 mm, b = 800 mm)			
	(L_1 = 975 mm, h_2 = 700 mm) L_2 = 1.5 m = 1500 mm			
	ⓐ 1.1 × 0.95 × 0.15 m = 0.157 m³			
	ⓑ 0.975 × 0.65 × 0.15 × 1/2 × 2 = 0.095 m³			
	ⓒ 1.7 × 0.975 × 0.2 = 0.215 m³			
	ⓓ 1.1 × 1.0 × 0.15 m = 0.165 m³			
	ⓔ 1.05 × 0.7 × 1/2 × 0.15 × 2 = 0.110 m³			
	ⓕ 1.1 × 1.05 × 0.2 m = 0.231 m³			
	ⓖ 0.3 × 0.4 × 1.1 m × 2 = 0.264 m³			
	1.237 m³			
	1.237 × 3 = 3.711	m³	6.021	
	0.77 × 3 = 2.310			

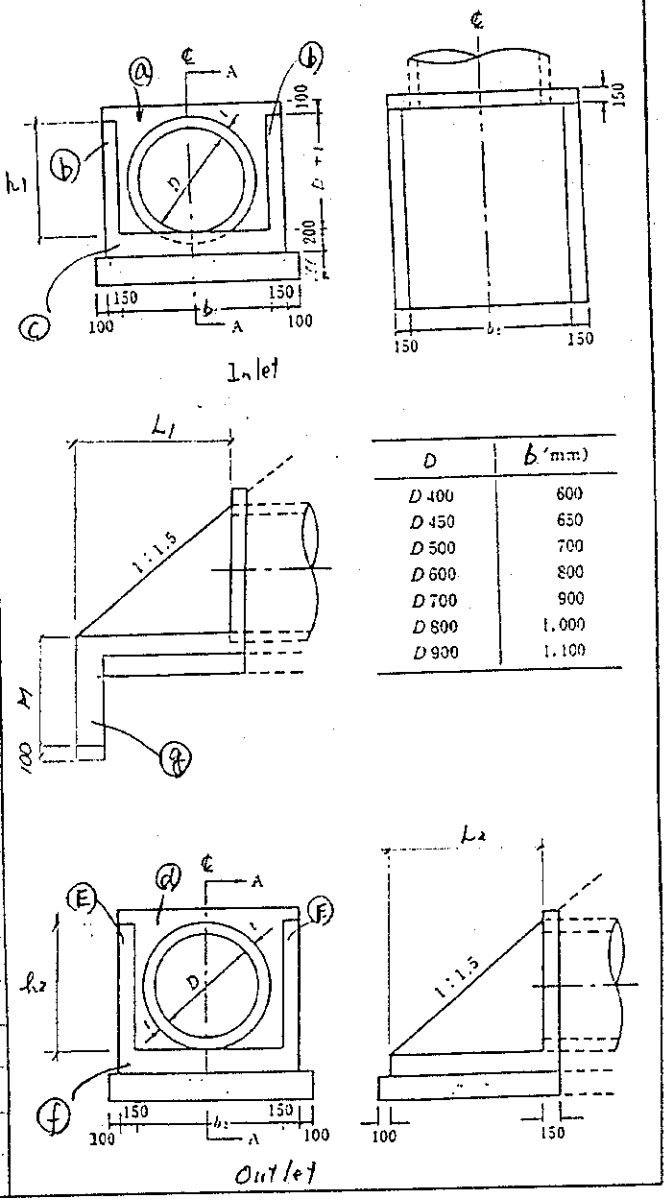

D	b (mm)
D 400	600
D 450	650
D 500	700
D 600	800
D 700	900
D 800	1,000
D 900	1,100

6-337

Working Division:

Description	Calculation Details	Unit	Quantity	Remarks
3 1/10	Concrete, class F for side ditch and catch basin			
	(catch basin). per 1 no.			
	1.15 × 1.30 × 2.2			
	− 0.75 × 0.9 × 2.0 = 1.939 m³			
	1.939 − 0.35π × 0.2 = 1.862 m³			
	1.862 × 3 = 5.586	m³	5.586	

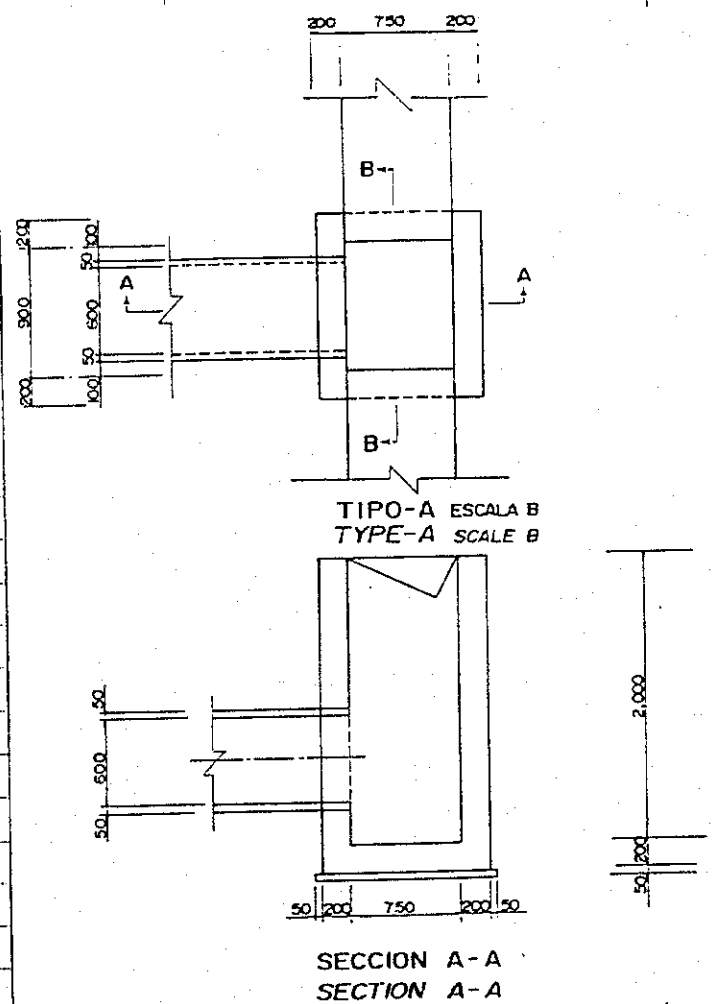

G-238

Working Division:

Description	Calculation Details	Unit	Quantity	Remarks
3 110	Concrete, class F. for side ditch and catch basin			
	(Side ditch) per 1m			
	1.08 × 0.432 × 1/2			
	− 0.75 × 0.3 × 1/2 = 0.121 m³			
	0.121 × 744 m = 90.024	m³	90.024	

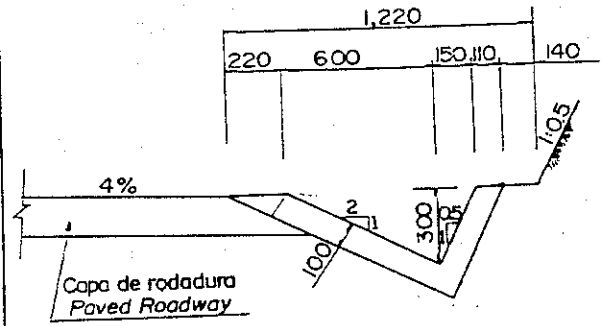

6-339

Working Division:

Description	Calculation Details	Unit	Quantity	Remarks
3 1/1	Concrete, class H for levelling concrete			
	1. Ø 600 pipe (wing wall)			
	1.1m × 1.125 × 0.1 = 0.124 m³			
	1.1 × 1.20 × 0.1 = 0.132 m³			
	0.256 m³			
	0.256 × 3 = 0.768	m³	1.164	
	0.132 × 3 = 0.396			
	2. Ø 800 pipe			
	1.3 × 1.449 × 0.1 = 0.189 m³			
	1.3 × 1.598 × 0.1 = 0.201 m³			
	0.390 m³			
	3. Ø 1,000 pipe			
	1.5 × 1.778 × 0.1 = 0.266 m³			
	1.5 × 1.896 × 0.1 = 0.284 m³			
	0.550 m³			

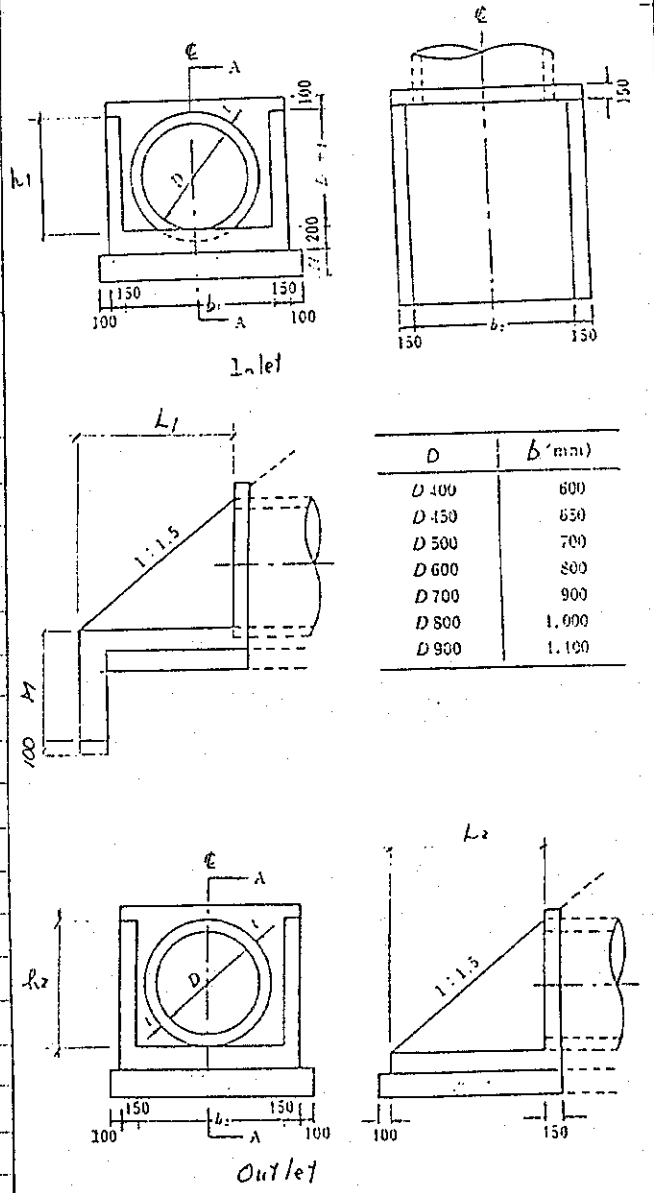

D	b (mm)
D 400	600
D 450	650
D 500	700
D 600	800
D 700	900
D 800	1,000
D 900	1,100

6-248

Working Division:

Description	Calculation Details	Unit	Quantity	Remarks
3 /11	Concrete class H for levelling concrete			
	(catch basin) per 1 no.			
	1.25 × 1.4 × ~~0.05~~ = 0.088 m^3			
	0.10 = 0.176			
	0.176 × 3 = 0.528	m^3	0.528	

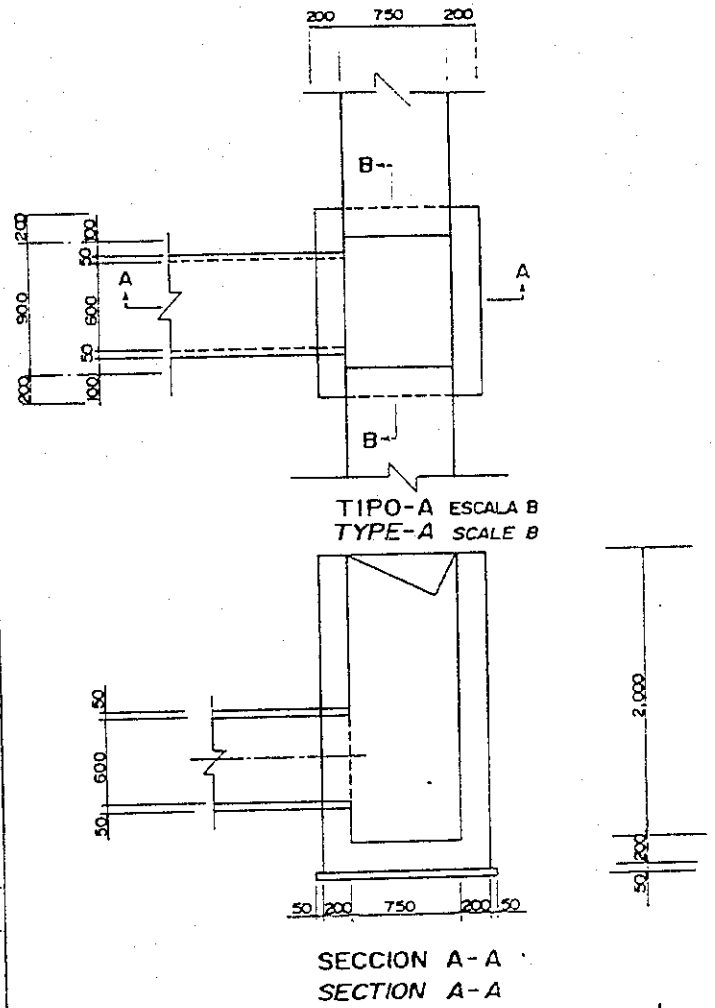

6-24

Working Division:

Description	Calculation Details	Unit	Quantity	Remarks
3 /12	Formwork, Fl finish for concrete of item 109, 110 and 111			
	(wing wall).			
	1. ø600.			
	ⓐ 1.1m × 0.95m = 1.045 m²			
	1.045 − (0.3+0.05)²π = 0.660 m²			
	ⓑ (0.15+1.125) × 0.65/2 × 2 = 0.839 m²			
	ⓒ 0.15 × 0.1 × 2 = 0.03 m²			
	ⓓ 0.2 × (1.1 + 1.125 × 2) + 1.1 × (0.4 + 0.2) = 1.33			
	ⓔ 1.1m × 1.0 m = 1.100 m²			
	1.100 − (0.3+0.05)²π = 0.715			
	ⓕ (0.15 + 1.20) × 0.7 × ½ × 2 = 0.945			
	ⓖ 0.15 × 0.1 × 2 = 0.03 m²			
	ⓗ 0.2 × (1.1 + 1.20 × 2) + 1.1 × (0.4 + 0.2) = 1.36			
	5.899 m²			
	5.899 × 3 = 17.697	m²	26.847	
	3.05 × 3 = 9.150			

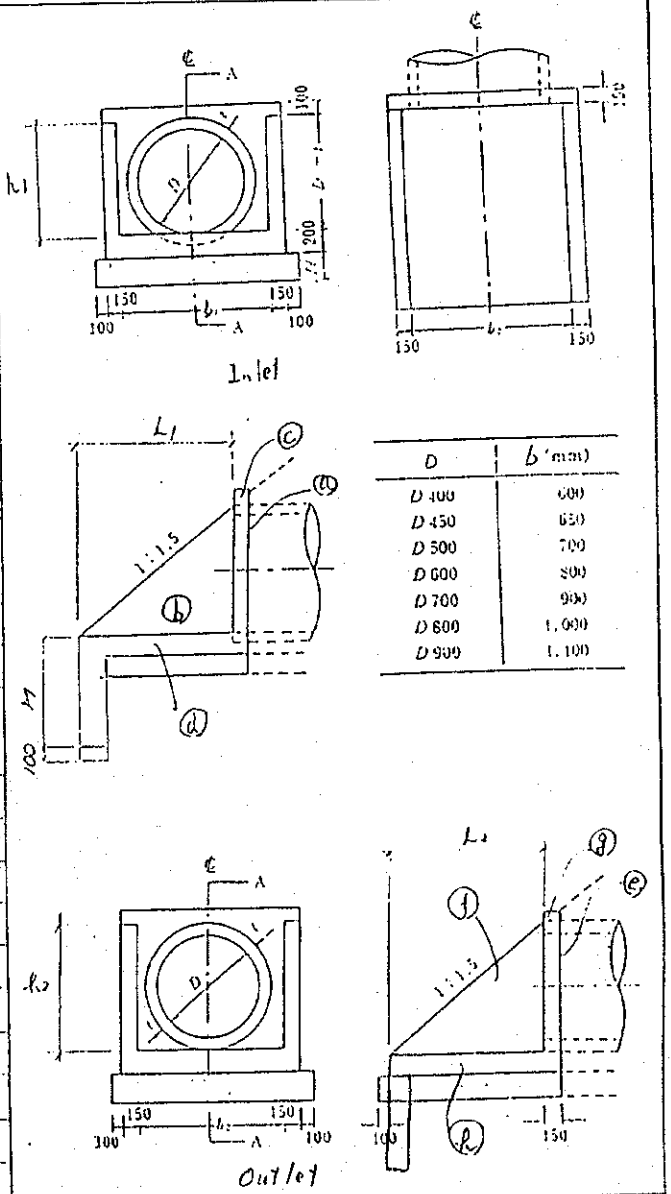

D	b (mm)
D 400	600
D 450	650
D 500	700
D 600	800
D 700	900
D 800	1,000
D 900	1,100

6-342

Working Division:

Description	Calculation Details	Unit	Quantity	Remarks
3 12	Formwork Fl finish			
	(Catch drain)			
	1.15 × 2.2 × 2 = 5.06			
	1.30 × 2.2 × 2 − 0.35²π = 5.335			
	10.395 m²			
	10.395 × 3 = 31.185	m²	31.185	

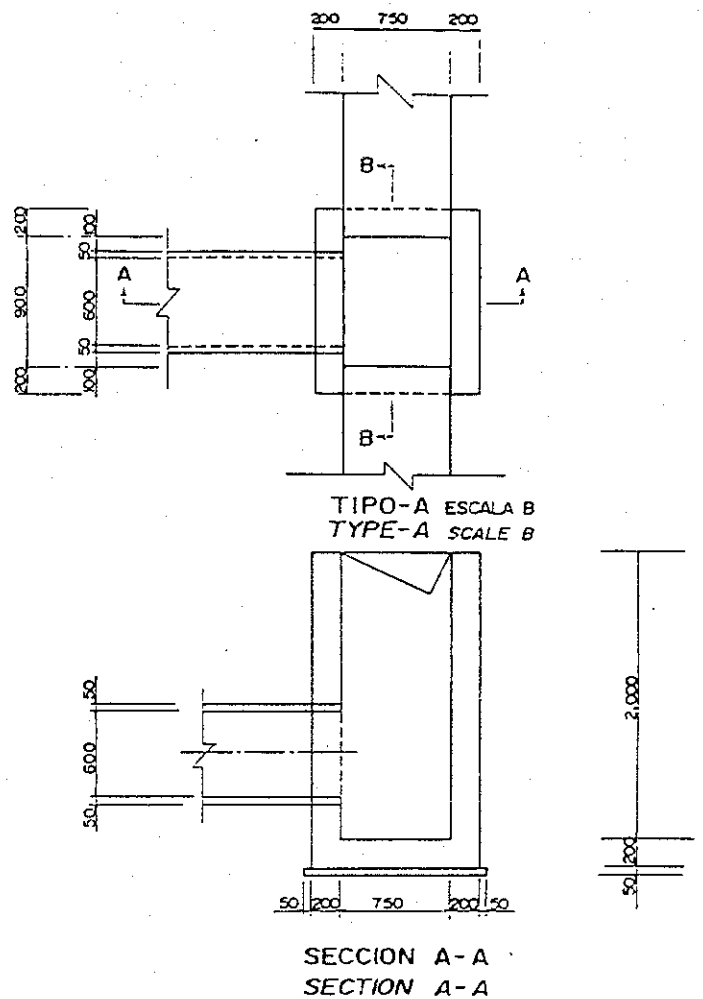

6-245

Working Division:

Description	Calculation Details	Unit	Quantity	Remarks
3 /13	Formwork F3 finish			
	(wing wall)			
	1. φ600.			
	ⓐ 0.1×1.1 + 0.8×0.65 − 0.3²π = 0.347 m²			
	ⓑ 0.975×0.65×½×2 = 0.634 m²			
	ⓒ 0.1×1.1 + 0.8×0.70 − 0.3²π = 0.387 m²			
	ⓓ 1.05×0.70×½×2 = 0.735 m²			
	2.103 m²			
	2.103 ×3 = 6.309	m²	9.675	
	1.122 ×3 = 3.366			

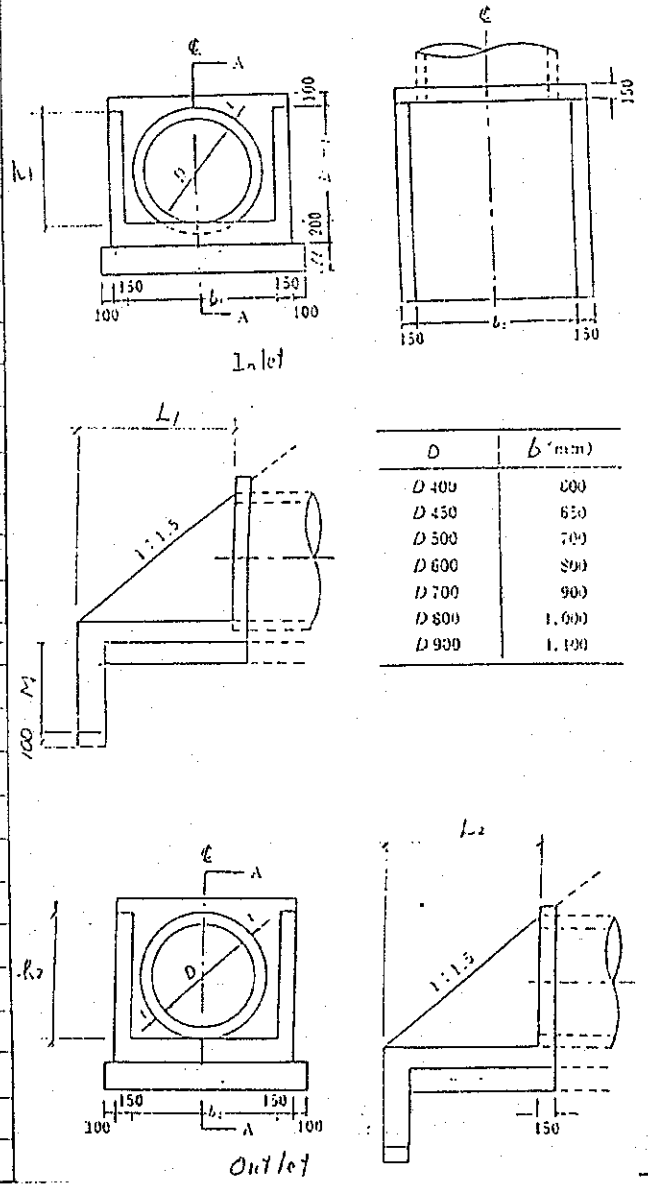

D	b (mm)
D 400	600
D 450	650
D 500	700
D 600	800
D 700	900
D 800	1,000
D 900	1,100

Working Division:

Description	Calculation Details	Unit	Quantity	Remarks
3 /3	Formwork F3 finish			
	(Catch basin)			
	0.75 × 2.0 × 2 = 3.0			
	0.90 × 2.0 × 2 − 0.37 = 3.317			
	6.317 m²			
	6.317 × 3 = 18.951	m²	18.951	

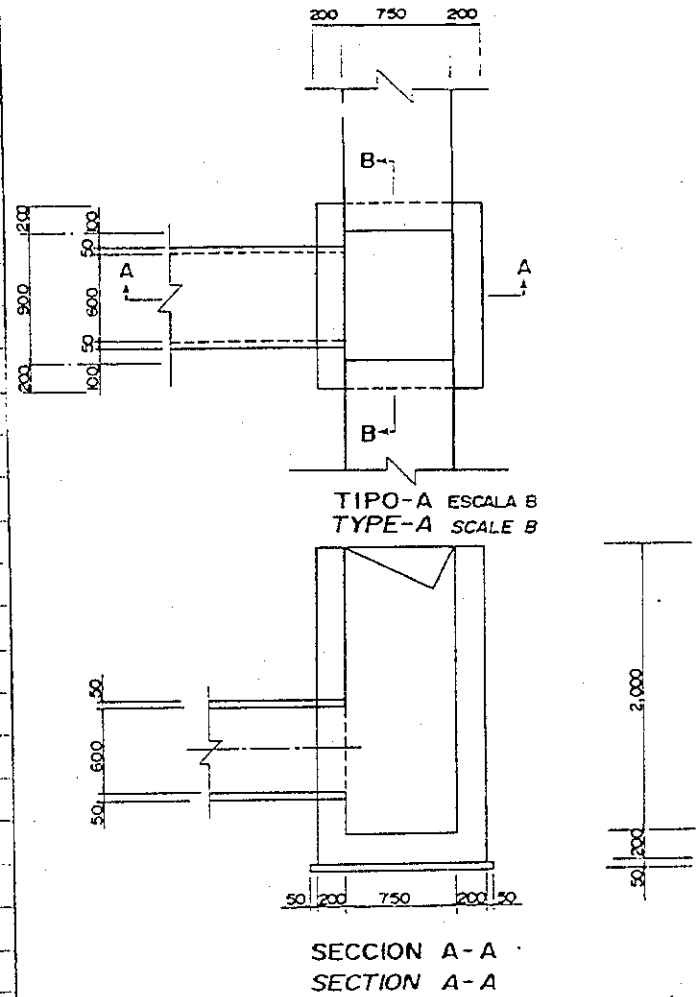

6-24

Working Division:

Description	Calculation Details	Unit	Quantity	Remarks
3 113	Formwork, F3 finish for concrete item 109 and 110.			
	(Side ditch). per 1m			
	0.671 + 0.335 = 1.006 m²			
	1.006 × 744 m = 748.464	m²	748.464	

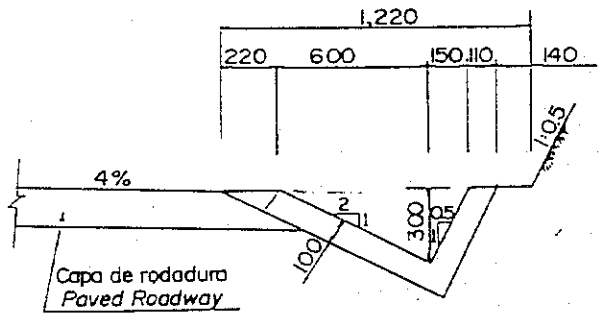

Working Division:

Description	Calculation Details	Unit	Quantity	Remarks
1. 3 /14	Reinforcing bars for concrete works			
	(wing wall)			
	80 kg / 1 m^3 of concrete volume			
	1. ϕ 600			
	1.237 m^3 x 80 = 98.96 kg			
	98.96 x 3 = 296.88			
	0.77 x 80 x 3 = 184.8			
	2. ϕ 800			
	2.000 m^3 x 80 = 160 kg			
	3. ϕ 1.000			
	2.939 m^3 x 80 = 235.12 kg			

Working Division:

Description	Calculation Details	Unit	Quantity	Remarks
3 114	Reinforcing bars for concrete works			
	(Catch basin)			
	80 kg/ 1m³ of concrete volume			
	1.862 m³ x 80 kg/m³ = 148.96 m³.			
	148.96 x 3 = 446.88 kg			

Working Division:

Description	Calculation Details	Unit	Quantity	Remarks
.3 /15	Gabion mattress, t = 500 mm			
	(Wing wall part)			
	1. Ø600			
	(0.8 + 0.3) × 5.0 × 0.5 = 2.75 m³	m³	18.150	
	2.75 × 2 × 3 = 16.50			
	2.75 × 0.2 × 3 = 1.65			
	2. Ø800			
	(1.1 + 0.3) × 5.0 × 0.5 = 3.75 m³			
	3. Ø1,000			
	(1.2 + 0.3) × 5.0 × 0.5 = 3.75 m³			
	4. 1.2 × 1.2 m			
	(2.434 × 2 + 3.3) × 5.0 × 0.5 = 20.42 m³			
	5. 1.5 × 1.5 m			
	(3.154 × 2 + 3.45) × 5.0 × 0.5 = 24.395 m³			

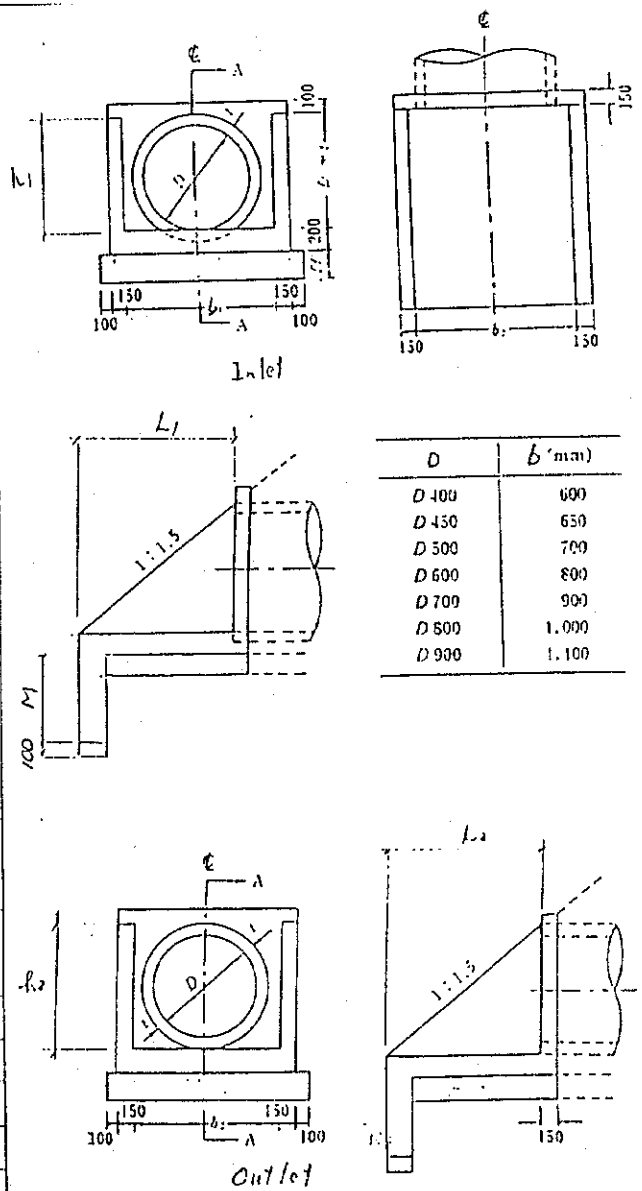

D	b (mm)
D 400	600
D 450	650
D 500	700
D 600	800
D 700	900
D 800	1,000
D 900	1,100

Working Division: 42. LA SECA

Description	Calculation Details	Unit	Quantity	Remarks
42	Box culverts			
105	Open-cut excavation	m^3	206.60	
106	Backfill with selected material	m^3	51.82	
107	Free draining backfill	m^3	82.912	
108	Gravel bedding	m^3	5.615	

Working Division: 14. LA SECA ACCESS ROAD

Description	Calculation Details	Unit	Quantity	Remarks
14.3	CULVERT AND DRAINAGE WORKS			
101	Open-cut excavation, all classes	m^3	829.788	
	1. Pipe culvert 104.37			
	2. Box culvert			
	3. Drain pipe 488.490			
	4. Catch basin 236.928			
	Total 829.788			
102	Backfill with selected material	m^3	258.41	
	1. Pipe culvert 48.49			
	2. Box culvert			
	3. Catch basin 209.920			
	Total 258.41			
103	Crushed stone bedding	m^3	15.80	→ 16
	1. Pipe culvert			

6-54

Working Division:

Description	Calculation Details	Unit	Quantity	Remarks
3	CULVERT AND DRAINAGE WORKS			
104	Reinforced concrete pipe, D.600 mm Culvert : 0 m, For ditch 51.5 m	m	51.500	→ 52
105	Reinforced concrete pipe, D.800 mm	m	45.90	→ 46
106	Reinforced concrete pipe, D.1,000 mm	m	0.0	
107	P.V.C. perforated drain pipe D.200 mm	m	2,035.376	→ 2036
108	Free drainage material for subdrain	m^3	424.579	→ 425
109	Concrete, class E. for pipe culvert and wing walls 1. Pipe culvert 22.83 2. Box culvert 3. Wing wall for pipe culvert 14.16 4. Wing wall for box culvert 46.492 Total 83.482	m^3	83.482	
110	Concrete, class F. for side ditch and catch basin 1. side ditch 14.896 2. catch basin 507.167 Total 522.063	m^3	522.063	→ 522

F-N-2

Working Division:

Description	Calculation Details	Unit	Quantity	Remarks
.3	CULVERT AND DRAINAGE WORKS			
/11	Concrete, class H, for levelling concrete.	m^3	8.648	
	1. Culvert			
	2. Wing wall 7.944			
	3. Catch basin 0.704			
	Total 8.648			
/12	Form work, F1 finish, for concrete of Items /09 and /10.	m^2	327.758	
	1. culvert 67.66			
	2. Wing wall 176.938			
	3. Catch basin 83.160			
	Total 327.758			
/13	Formwork, F3 finish, for concrete of Items /09 and /10.	m^2	4373.275	
	1. Culvert			
	2. Wing wall 106.130			
	3. Catch basin 50.536			
	4. Drain ditch 4216.609			
	Total 4373.275			

ETC-9

Working Division:

Description	Calculation Details	Unit	Quantity	Remarks
3.	CULVERT AND DRAINAGE WORKS			
14	Reinforcing bars for concrete works	Ton	6	16
	1. Culvert			
	2. Wing wall 4420.36			
	3. Catch basin 1191.68			
	Total 5612.04			
15	Gabion mattress, t = 500 mm	m^3	153.130	154
4 ~~16~~ 10	Joint filler, t = 10 mm	m^2	6.585	6
4 ~~17~~ 12	Bituminous coating for contraction joint	m^2	13.170	14

Working Division: 4

Description	Calculation Details	Unit	Quantity	Remarks
H 4	CONCRETE WORKS			
103	Concrete class E for box culverts	m^3	122.304	
104	Concrete class H for levelling concrete	m^3	11.230	
106	Formwork F1 finish for concrete item 103, 104	m^2	220.480	
108	Formwork F3 finish for concrete item 103	m^2	247.45	
109	Reinforcing bars for concrete works	Ton	10.	
110	Joint filler for culvert	m^2	6.585	
112	Bituminous coating for contraction joint	m^2	13.170	

変更(1)

6 LA SECA

Sr. No	St No.	Q m3/s	I	Entrance El m	Exit El m	Road El m	Culvert Length m	Type	Soil Thickness m
D-1	0+414.50	2.00	5.0%	192.600	191.875	196.660	14.500	D=800mm 180	3.622
D-2	0+879.50	23.22	3.0%	188.850	188.388	194.785	15.400	2000mm x 2000mm I	4.166
D-3	2+014.00	28.65	6.5%	180.110	178.407	191.100	26.200	2000mm x 2000mm III	9.841
D-4	2+700.00	1.70	4.0%	185.850	185.454	188.125	9.900	D=800mm 90°	1.673
D-5	3+100.00	2.22	10.0%	190.500	189.360	193.200	11.400	D=800mm 90	2.470
D-6	3+450.00	1.70	10.0%	191.400	190.390	193.200	10.100	D=800mm 90°	1.505
							87.500		

			(m)	(m)
2	φ800	90°	31.4	3.
0		180°	14.5	1
1	2.0×2.0	I.	15.4	1
1		III	26.2	1.

6-3-8

7. La Seca

		Length	Pipe Length	Open Cut Excavation (12.3/01)		Backfill (12.3/02)		Crushed Stone Bedding (12.3 /03)		Pipe D=600 (12.3/04)	Pipe D=800 (12.3/05)	Pipe D=1000 (12.3/06)	Concrete Class E (12.3/09)		Form Work F1 (12.3/12)		Reinforced Bar (12.3/14)	
		Unit (m)	Unit (m)	Unit (m3)	Total	Unit (m3)	Total	Unit (m3)	Total	Unit (m)	Unit (m)	Unit (m)	Unit (m3)	Total	Unit (m2)	Total	Unit (kg)	Total
D=600mm	90	51.5	51.5	0.83	42.68	0.43	22.18	0.14	7.34				0.16	8.05	0.52	26.78	0.00	0.00
	180	0.0		0.93	0.00	0.42	0.00	0.17	0.00				0.26	0.00	1.00	0.00	0.00	0.00
	Fix	0.0		1.09	0.00	0.45	0.00	0.24	0.00				0.62	0.00	2.00	0.00	42.98	0.00
D=800mm	90	31.4	45.9	1.28	40.17	0.58	18.15	0.17	5.42				0.26	8.12	0.68	21.35	0.00	0.00
	180	14.5		1.48	21.52	0.56	8.16	0.21	3.05				0.46	6.66	1.34	19.43	0.00	0.00
	Fix	0.0		1.72	0.00	0.60	0.00	0.31	0.00				1.11	0.00	2.68	0.00	73.53	0.00
D=1000mm	90	0.0	0.0	1.90	0.00	0.73	0.00	0.28	0.00				0.35	0.00	0.76	0.00	0.00	0.00
	180	0.0		2.12	0.00	0.72	0.00	0.33	0.00				0.60	0.00	1.58	0.00	0.00	0.00
	Fix	0.0		2.22	0.00	0.71	0.00	0.36	0.00				1.43	0.00	3.16	0.00	84.55	0.00
Total		97.4			104.37		48.49		15.80	51.50	45.90	0.00		22.83		67.56		0.00

		Length	Open Cut Excavation (12.2/07)		Backfill (12.2/06)		Concrete Class E (Item12.4/03)		Concrete Class H (Item12.4/04)		Form Work F1 (Item12.4/06)		Form Work F3 (Item12.4/08)		Reinforced Bar (12.4/09)	
		Unit (m)	Unit (m3)	Total	Unit (m3)	Total	Unit (m3)	Total	Unit (m3)	Total	Unit (m2)	Total	Unit (m2)	Total	Unit (kg)	Total
1200mm x 1200mm	~9.25	0.0	2.42	0.00	0.77	0.00	1.63	0.00	0.19	0.00	3.60	0.00	3.70	0.00	162.91	0.00
1500mm x 1500mm	~9.5	0.0	3.36	0.00	0.96	0.00	2.31	0.00	0.22	0.00	4.30	0.00	4.45	0.00	193.31	0.00
2000mm x 2000mm	~5.75	41.6	4.97	206.60	1.25	51.82	2.94	~~206.60~~ 122.304	0.27	11.23	5.30	220.48	5.95	247.45	232.36	9,666.34
2000mm x 2000mm	~7.75	0.0	5.18	0.00	1.31	0.00	3.20	0.00	0.27	0.00	5.50	0.00	5.95	0.00	236.02	0.00
2000mm x 2000mm	7.751~	0.0	5.54	0.00	1.37	0.00	3.74	0.00	0.28	0.00	5.70	0.00	5.95	0.00	270.47	0.00
2500mm x 2000mm	3.75~5.75	0.0	5.93	0.00	1.31	0.00	3.61	0.00	0.32	0.00	5.50	0.00	6.43	0.00	317.29	0.00
2500mm x 2000mm	5.751~	0.0	6.32	0.00	1.37	0.00	4.20	0.00	0.32	0.00	5.70	0.00	6.43	0.00	331.62	0.00
Total		41.6		206.60		51.82		~~206.60~~ 122.304		11.23		220.48		247.45		9,666.34

LONGITUD DE CUNETAS

CAMINO DE ACCESO: LA SECA 0+000 a 3+284.03 Km

	ABSCISAS		IZQUIERDA	DERECHA	LONGITUD
	0+000.00 - 0+038.18		0.00	38.18	38.18
5.5	0+060.00 - 0+300.00		0.00	240.00	240.00
8.0	0+300.00 - 0+540.00		0.00	240.00	240.00
6.5	0+540.00 - 0+810.00		0.00	270.00	270.00
5.5	0+890.00 - 1+100.00		0.00	210.00	210.00
6.0	1+100.00 - 1+330.00		0.00	230.00	230.00
8.0	1+330.00 - 1+400.00		0.00	70.00	70.00
	1+400.00 - 1+440.41		40.41	40.41	80.82
	1+440.41 - 1+490.00		0.00	49.59	49.59
1.5	1+490.00 - 1+720.00		0.00	230.00	230.00
	1+720.00 - 1+780.00		60.00	60.00	120.00
5.5	1+780.00 - 1+900.00		0.00	120.00	120.00
	1+900.00 - 2+000.00		0.00	100.00	100.00
	2+064.10 - 2+115.13	VV	51.03	51.03	102.06
	2+115.13 - 2+240.00		0.00	124.87	124.87
	2+240.00 - 2+274.38		34.38	34.38	68.76
	2+274.38 - 2+340.00		0.00	65.62	65.62
	2+440.00 - 2+490.00	VV	50.00	50.00	100.00
	2+580.00 - 2+694.67	V	0.00	114.67	114.67
	2+740.00 - 2+760.00	VV	20.00	0.00	20.00
	2+760.00 - 2+837.58		77.58	77.58	155.16
	2+880.00 - 2+920.00		0.00	40.00	40.00
	2+920.00 - 3+080.00		160.00	160.00	320.00
	3+080.00 - 3+163.53		0.00	83.53	83.53
	3+163.53 - 3+200.00	VV	36.47	36.47	72.94
	3+220.00 - 3+240.00		0.00	20.00	20.00
	3+240.00 - 3+350.00		110.00	110.00	220.00
	3+350.00 - 3+514.48		0.00	164.48	164.48
	3+514.48 - 3+600.00		85.52	85.52	171.04
	3+600.00 - 3+714.29		0.00	114.29	114.29
	3+714.29 - 3+720.00		5.71	5.71	11.42
	3+720.00 - 3+740.00		0.00	20.00	20.00
	3+740.00 - 3+750.00		10.00	10.00	20.00
	3+750.00 - 3+760.00		10.00	10.00	20.00
	3+760.00 - 3+824.03		0.00	64.03	64.03

LONG. TOTAL: 4091.46 m

Total length 4091.46
addition 10x10=100 4191.46m
catch basin 8 nos
ϕ 600 51.5 m

Drain Pipe Quantities

Access Road Name	Length (m)	Excavation (m3)		P.V.C Pipe D=200mm (m)		Drainage Material (m3)	
		Per meter	Total		Total	Per meter	Total
Conguillo	5,823.120	0.240	1,397.549		5,823.120	0.209	1,214.703
Severno Tramo1	1,535.870	0.240	368.609		1,535.870	0.209	320.382
Severno Tramo2	2,472.920	0.240	593.501		2,472.920	0.209	515.851
Los Cuyuyes	7,324.030	0.240	1,757.767		7,324.030	0.209	1,527.793
Poza Honda	266.710	0.240	64.010		266.710	0.209	55.636
La Seca	2,035.376	0.240	488.490		2,035.376	0.209	424.579
El Guasmo	786.460	0.240	188.750		786.460	0.209	164.056
Cana Dulce	1,200.560	0.240	288.134		1,200.560	0.209	250.437
Membrillo Outlet	30.000	0.240	7.200		30.000	0.209	6.258
Grand Total			5,154.011		21,475.046		4,479.695

Excavation	V=(0.8+0.4)*0.4/2	=0.24
Free Drainage Material	V=0.24-3.14*0.1^2	=0.21

649

Working Division:

Description	Calculation Details	Unit	Quantity	Remarks
.3 101	Open-cut excavation, all classes (Catch basin)			
	2.25 × 2.4 m = 5.4 m²			
	4.5 × 4.65 m = 20.925 m²			
	(5.4 + 20.925) × 1/2 × 2.25 = 29.616 m³			
	29.616 × 8 nos = 236.928	m³	236.928	

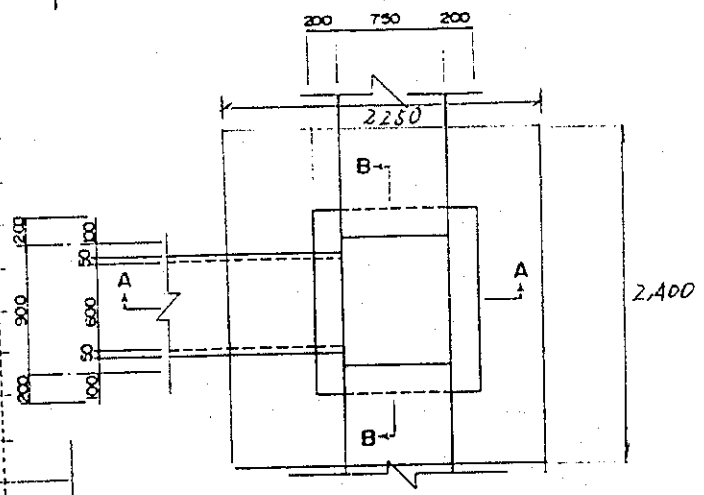

TIPO-A ESCALA B
TYPE-A SCALE B

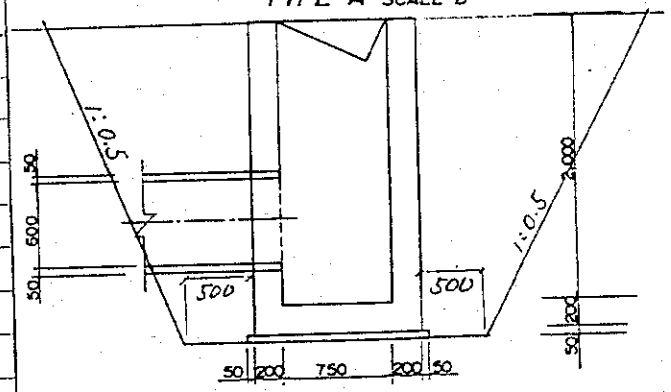

SECCION A-A
SECTION A-A

Working Division:

Description	Calculation Details	Unit	Quantity	Remarks
3 /02	Backfill with selected material.			
	<catch basin>			
	29.616 − 1.15 × 1.3 × 2.2 − 1.25 × 1.4 × 0.05 = 26.240			
	26.24 × 8 = 209.92	m^3	209.920	

Working Division:

Description	Calculation Details	Unit	Quantity	Remarks
3 109	Concrete class E for			
	(wing wall)			
	<pipe type>			
	1. Ø 600 (h_1 = 650 mm, b = 800 max)			
	(L_1 = 975 mm, h_2 = 700 mm) L_2 = 1.5 M = 40 max			
	ⓐ 1.1 × 0.95 × 0.15 m = 0.157 m³			
	ⓑ 0.975 × 0.65 × 0.15 × 1/2 × 2 = 0.095 m³			
	ⓒ 1.7 × 0.975 × 0.2 = 0.215 m³			
	ⓓ 1.1 × 1.0 × 0.15 m = 0.165 m³			
	ⓔ 1.05 × 0.7 × 1/2 × 0.15 × 2 = 0.110 m³			
	ⓕ 1.1 × 1.05 × 0.2 m = 0.231 m³			
	ⓖ 0.3 × 0.4 × 1.1 m × 2 = 0.264 m³			
	1.237 m³			
	0.77 × 8 nos = 6.16	m³	6.160	

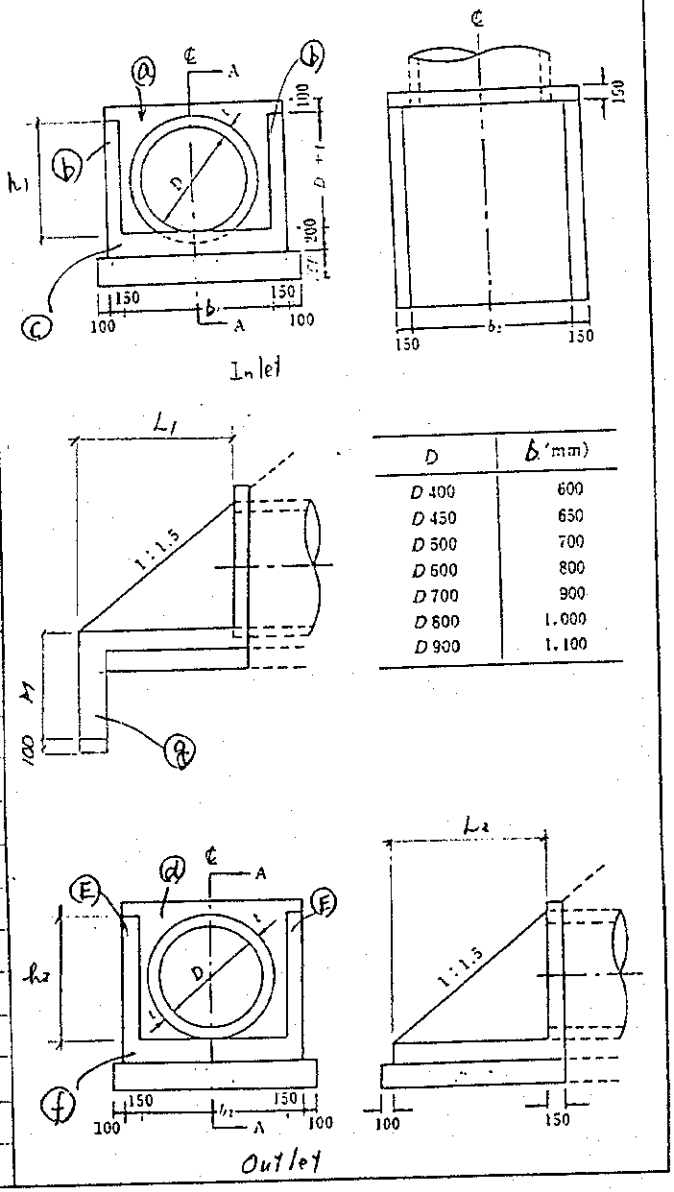

D	b (mm)
D 400	600
D 450	650
D 500	700
D 600	800
D 700	900
D 800	1.000
D 900	1.100

Working Division:

Description	Calculation Details	Unit	Quantity	Remarks
3 109.	2. φ800. $h_1 = 0.866m$ $L_1 = 1.299$ m $b = 1.0m$, $h_2 = 0.932$, $L_2 = 1.398$ m $M = 0.6$ m ⓐ: $1.3 \times 1.166 \times 0.15 = 0.227$ m^3 ⓑ: $0.866 \times 1.299 \times 1/2 \times 0.15 \times 2 = 0.169$ m^3 ⓒ: $1.3 \times 1.299 \times 0.2 = 0.338$ m^3 ⓓ: $1.3 \times 1.232 \times 0.15 = 0.240$ m^3 ⓔ: $0.932 \times 1.398 \times 1/2 \times 0.15 \times 2 = 0.195$ m^3 ⓕ: $1.3 \times 1.398 \times 0.2 = 0.363$ m^3 ⓖ: $0.3 \times 0.6 \times 1.3 \times 2 = 0.468$ m^3 2.0 m^3 $2.0 \times 4 = 8.0$	m^3	8.0	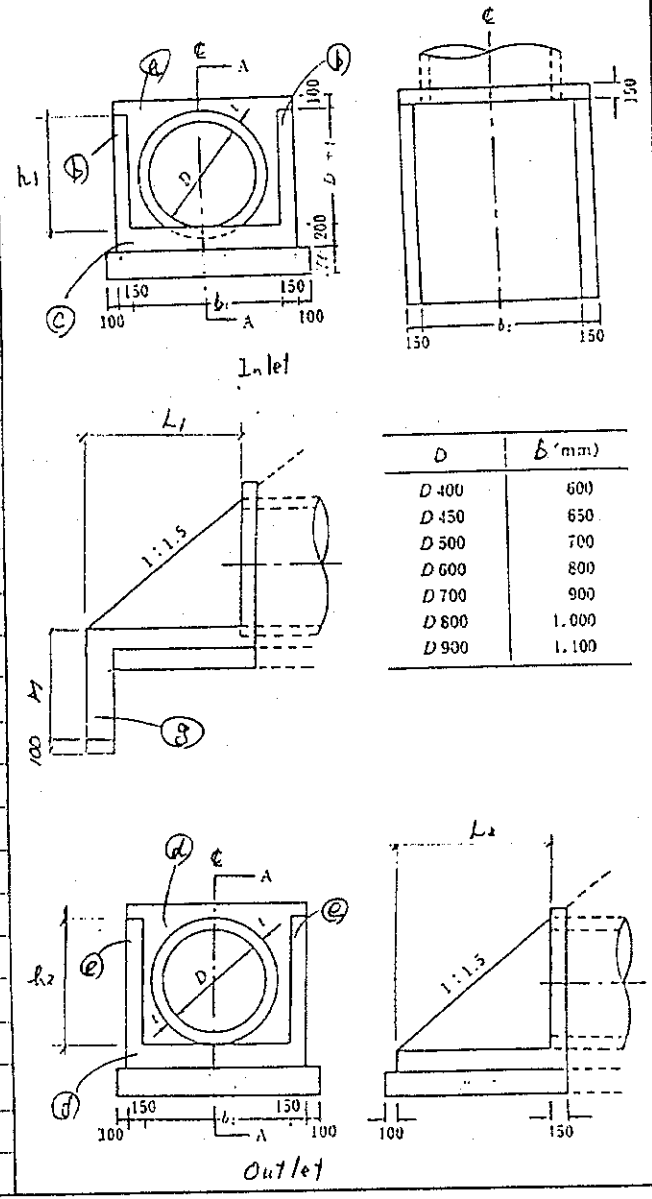

D	b (mm)
D 400	600
D 450	650
D 500	700
D 600	800
D 700	900
D 800	1.000
D 900	1.100

Working Division:

Description	Calculation Details	Unit	Quantity	Remarks
3 /09	Concrete, class E			
	(wing wall)			
	3. 2.0 × 2.0 m (I)			
	<wing>			
	[(10.7 + 3.95) × 2.25/2 + 0.7 × 10.7 − 2.0²] × 0.3 = 5.991			
	<slab>			
	3.6 × 2.6 × 0.35 = 3.276			
	0.3 × 1.25 × 2.6 = 0.975			
	10.242 m³			
	10.242 × 2 × 1 = 20.484	m³	20.484	

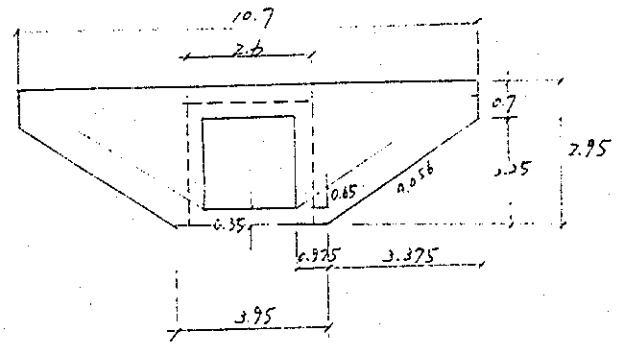

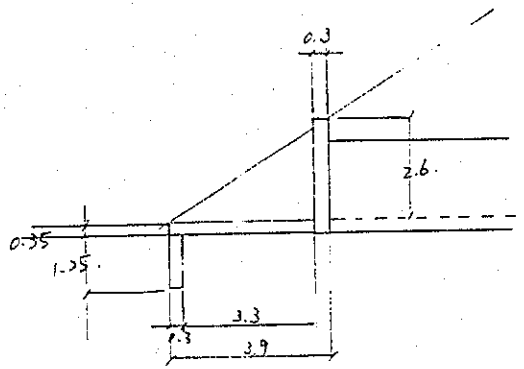

Working Division:

Description	Calculation Details	Unit	Quantity	Remarks
3 109	Concrete class E (Wing wall).			
	5. 2.0 × 2.0 (III)			
	<Wing> {(11.0 + 3.65) × 2.45 × 1/2 + 0.7 × 11.0 − 2.0²} × 0.35 = 7.576 m³			
	<slab> 2.7 × 3.70 × 0.45 = 4.496 0.3 × 1.15 × 2.70 = 0.932 13.004 m³			
	13.004 × 2 × 1 = 26.008	m³	26.008	

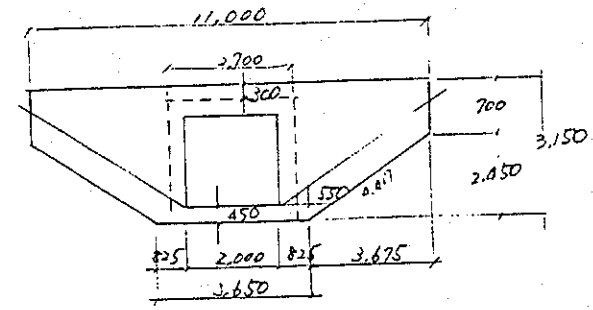

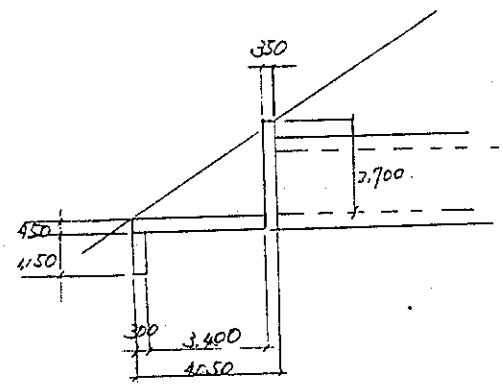

6-265

Working Division:

Description	Calculation Details	Unit	Quantity	Remarks
3 1/10	Concrete, class F, for side ditch and catch basin			
	(catch basin) per 1 no.			
	1.15 × 1.30 × 2.2			
	− 0.75 × 0.9 × 2.0 = 1.939 m³			
	1.939 − 0.35π × 0.2 = 1.862 m³			
	1.862 × 8 = 14.896	m³	14.896	

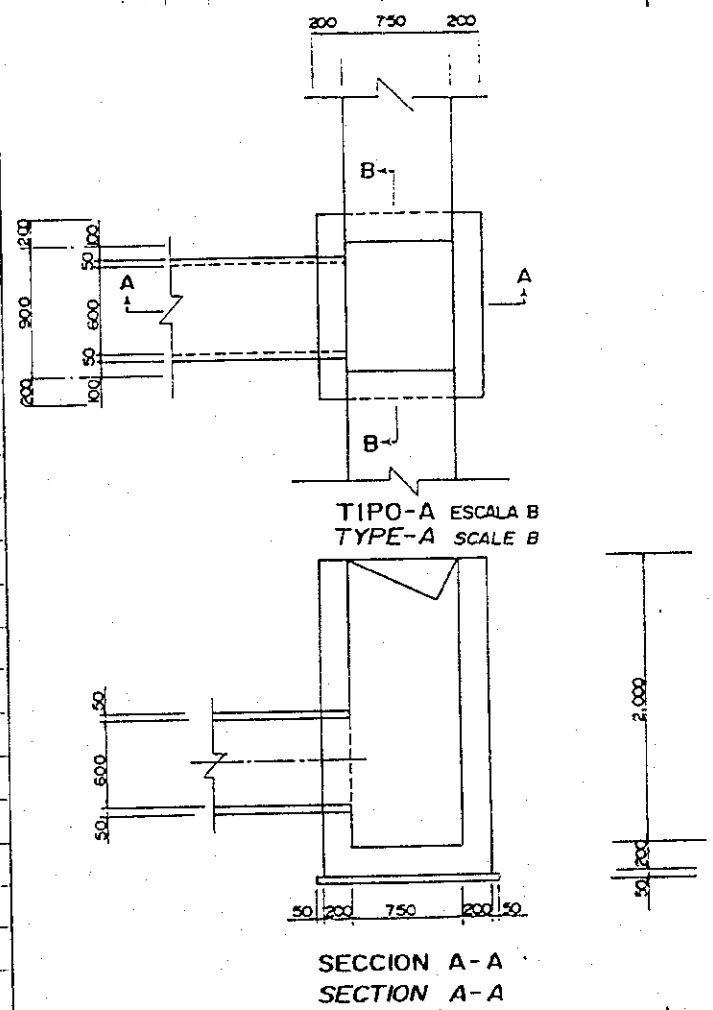

9-286

Working Division:

Description	Calculation Details	Unit	Quantity	Remarks
3 1/10	Concrete, class F. for side ditch and catch basin			
	(Side ditch) per 1 m			
	1.08 × 0.432 × 1/2			
	− 0.75 × 0.3 × 1/2 = 0.121 m³			
	0.121 × 4191.46 m = 507.167	m³	507.167	

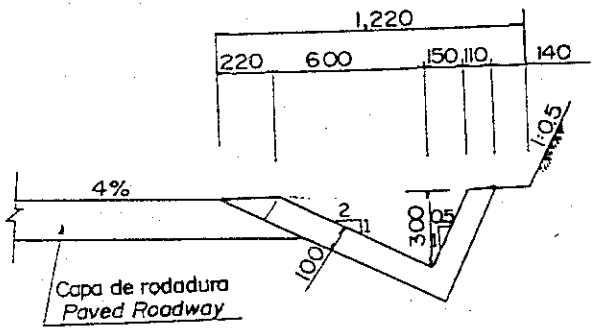

6-267

Working Division:

Description	Calculation Details	Unit	Quantity
3 1.1	Concrete, class H for levelling concrete		
	1. Ø 600 pipe (using wall)		
	1.1m × 1.125 × 0.1 = 0.124 m³		
	1.1 × 1.20 × 0.1 = 0.132 m³		
	0.256 m³		
	0.132 × 8 = 1.056	m³	1.056
	2. Ø 800 pipe		
	1.3 × 1.449 × 0.1 = 0.189 m³		
	1.3 × 1.548 × 0.1 = 0.201 m³		
	0.390 m³	m³	1.560
	0.390 × 4 = 1.56		
	3. Ø 1,000 pipe		
	1.5 × 1.773 × 0.1 = 0.266 m³		
	1.5 × 1.896 × 0.1 = 0.284 m³		
	0.550 m³		

Remarks

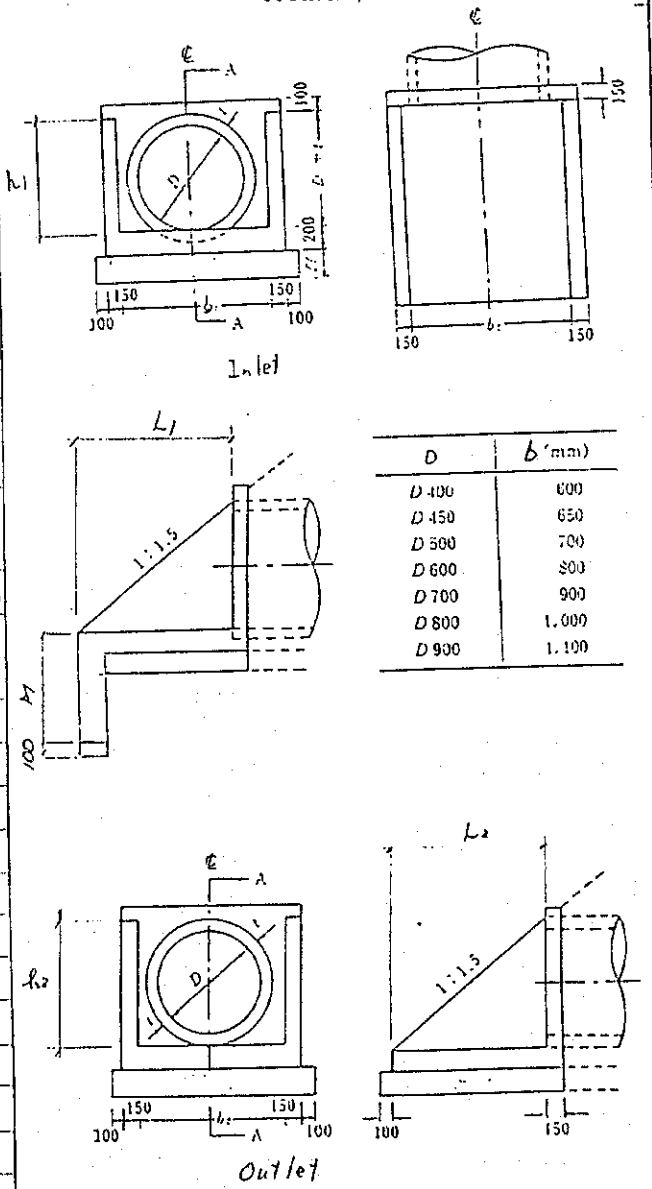

D	b (mm)
D 400	600
D 450	650
D 500	700
D 600	800
D 700	900
D 800	1,000
D 900	1,100

P92-9

Working Division:

Description	Calculation Details	Unit	Quantity	Remarks
3 1/1	Concrete class H for levelling concrete (wing wall)			
	3 2.0 x 2.0 (I)			
	(wing) 0.3 x (4.056 x 2 + 3.95) x 0.1 = 0.362 m³			
	(slab) 2.6 x 3.33 x 0.1 = 0.866			
	1.228 m³			
	1.228 x 2 x 1 = 2.456	m³	2.456	
	4. 2.0 x 2.0 (II)			
	(wing) 0.3 x (4.237 x 2 + 3.80) x 0.1 = 0.368			
	(slab) 2.6 x 3.675 x 0.1 = 0.956			
	1.324 m³			

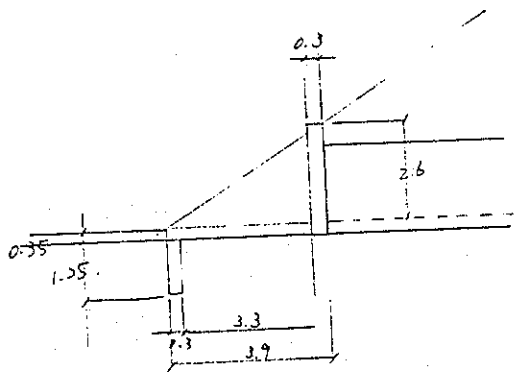

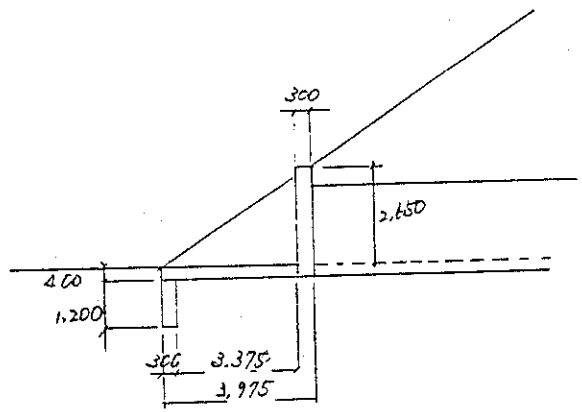

6-269

Working Division:

Description	Calculation Details	Unit	Quantity	Remarks
3 / 11	Concrete class H for levelling concrete			
	(wing wall)			
	5 2.0 x 2.0 m (III)			
	(wing) 0.35 x (4.417 x 2 + 3.65) x 0.1 = 0.437			
	(slab) 2.7 x 3.7 x 0.1 = 0.999			
	1.436 m³			
	1.436 x 2 x 1 = 2.872	m³	2.872	
	6. 2.5 x 2.0 m (I)			
	(wing) 0.30 x (4.237 x 2 + 4.3) x 0.1 = 0.383			
	(slab) 3.1 x 3.675 x 0.1 = 1.139			
	1.522 m³			

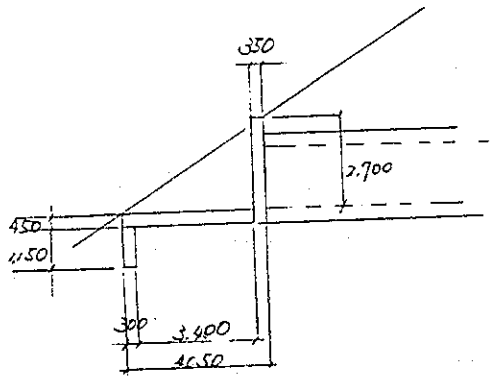

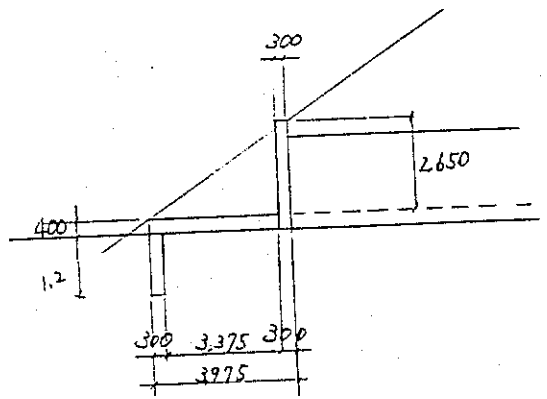

Working Division:

Description	Calculation Details	Unit	Quantity	Remarks
3 1/11	Concrete class H for levelling concrete			
	(catch basin) per 1 no.			
	1.25 × 1.4 × ~~0.05~~ 0.10 = ~~0.088~~ 0.175 m^3			
	0.175 × 8 = 1.400	m^3	1.400	

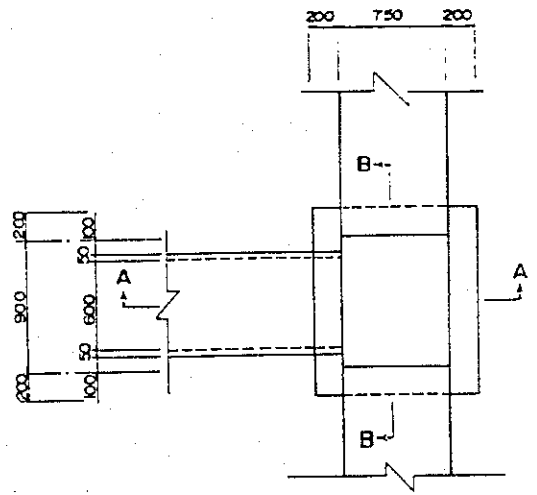

TIPO-A ESCALA B
TYPE-A SCALE B

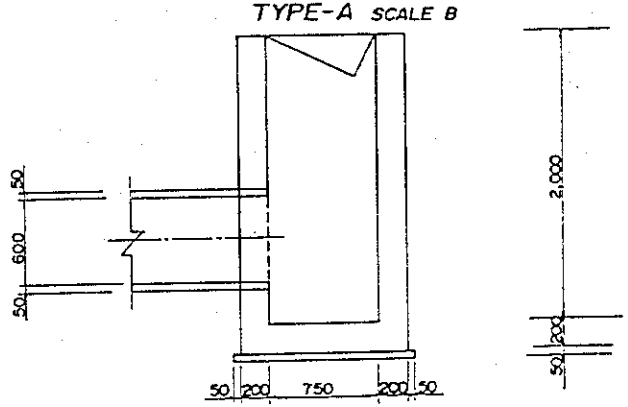

SECCION A-A
SECTION A-A

Working Division:

Description	Calculation Details	Unit	Quantity	Remarks
13 /12	Formwork, FI finish for concrete of item 109, 110 and 111			
	(wing wall)			
	1. Ø 600			
	ⓐ 1.1m × 0.95m = 1.045 m²			
	1.045 − (0.3+0.05)²π = 0.660 m²			
	ⓑ (0.15+1.125) × 0.15/2 × 2 = 0.829 m²			
	ⓒ 0.15 × 0.1 × 2 = 0.03 m²			
	ⓓ 0.2 × (1.1 + 1.125 × 2) + 1.1 × (0.4 + 0.2) = 1.33			
	ⓔ 1.1m × 1.0 m = 1.100 m²			
	1.100 − (0.3+0.05)² π = 0.715			
	ⓕ (0.15 + 1.20) × 0.7 × ½ × 2 = 0.945			
	ⓖ 0.15 × 0.1 × 2 = 0.03 m²			
	ⓗ 0.2 × (1.1 + 1.20 × 2) + 1.1 × (0.4 + 0.2) = 1.36			
	5.899 m²			
	3.05 × 8 m = 24.4 m²	m²	24.400	

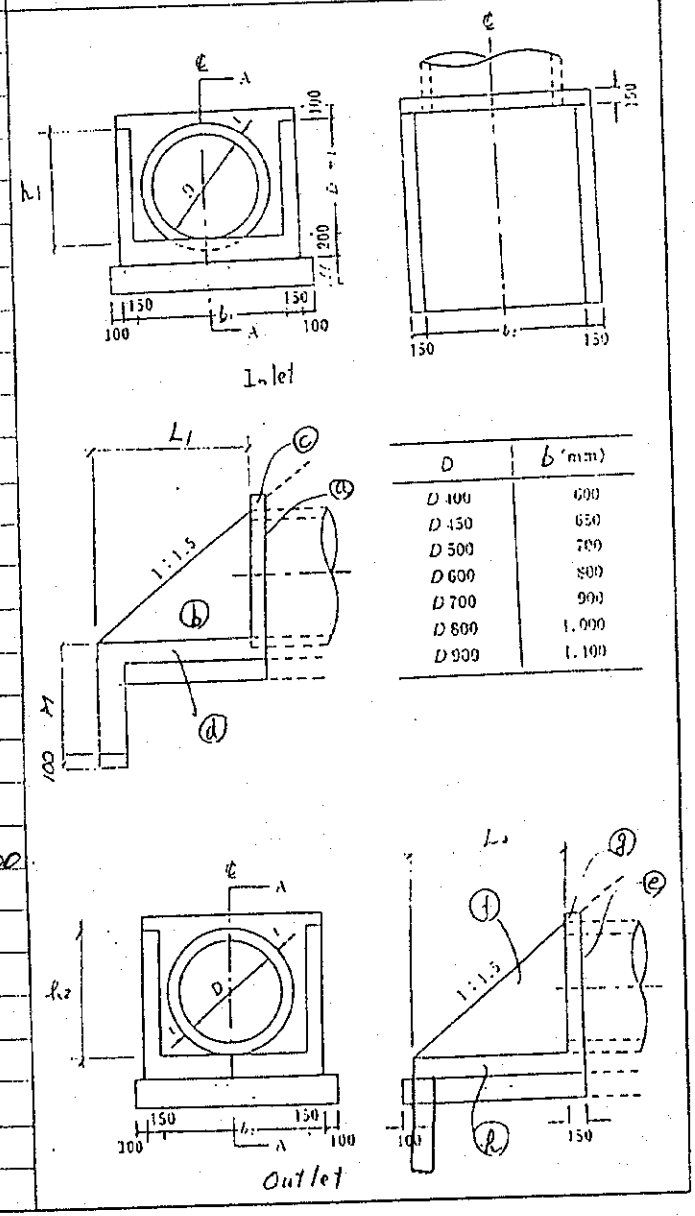

D	b (mm)
D 400	600
D 450	650
D 500	700
D 600	800
D 700	900
D 800	1,000
D 900	1,100

6-2/6

Working Division:

Description	Calculation Details	Unit	Quantity	Remarks
3 / 12	Formwork F1 finish			
	(wing wall)			
	2. φ800			
	ⓐ 1.3 m × 1.166 m = 1.516			
	1.516 − (0.466)²π = 0.834 m²			
	ⓑ (0.15 + 1.449) × 0.866 × ½ × 2 = 1.385 m²			
	ⓒ 0.15 × 0.1 × 2 = 0.03			
	ⓓ 0.2 × (1.3 + 1.449 × 2) + 1.3 (0.6 + 0.4)			
	= 2.140			
	ⓔ 1.3 × 1.232 = 1.602			
	1.602 − 0.466²π = 0.920 m²			
	ⓕ (0.15 + 1.548) × 0.932 × ½ × 2 = 1.583 m²			
	ⓖ 0.15 × 0.1 × 2 = 0.03			
	ⓓ 0.2 × (1.3 + 1.548 × 2) + 1.3 × (0.6 + 0.4)			
	= 2.179			
	9.101 m²			
	9.101 × 4 = 36.404	m²	36.404	

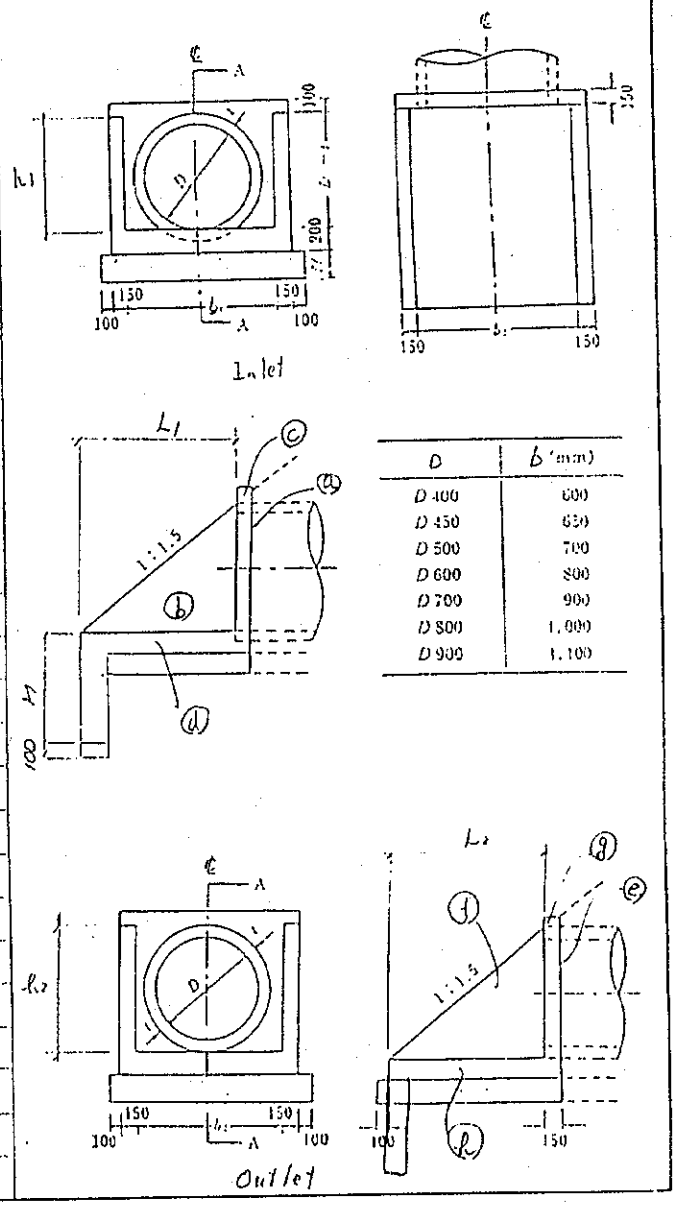

D	b (mm)
D 400	600
D 450	650
D 500	700
D 600	800
D 700	900
D 800	1,000
D 900	1,100

Working Division:

Description	Calculation Details	Unit	Quantity	Remarks
3 112	Formwork Fl finish			
	3. 2.0 × 2.0 m (I)			
	ⓐ (10.7 + 3.95) × 2.25 × 1/2 + 0.7 × 10.7			
	− 2.6 × 2.65 = 17.081 m²			
	ⓑ 0.7 × 0.3 × 2 = 0.42 m²			
	ⓒ (3.6 × 1.60 − 3.3 × 1.25) × 2 = 3.270 m²			
	ⓓ 1.60 × 2.6 = 4.16 m²			
	ⓔ 1.25 × 2.6 = 3.25 m²			
	28.181 m²			
	28.181 × 2 × 1 = 56.362	m²	56.362	
	4 2.0 × 2.0 m (II)			
	ⓐ (10.85 + 3.8) × 2.35 × 1/2 + 0.7 × 10.85			
	− 2.6 × 2.75 = 17.659 m²			
	ⓑ (0.7 × 0.3 × 2 = 0.42 m²			
	ⓒ (3.675 × 1.6 − 3.375 × 1.2) × 2 = 3.660 m²			
	ⓓ 1.6 × 2.6 = 4.16 m²			
	ⓔ 1.2 × 2.6 = 3.12 m²			
	29.019 m²			

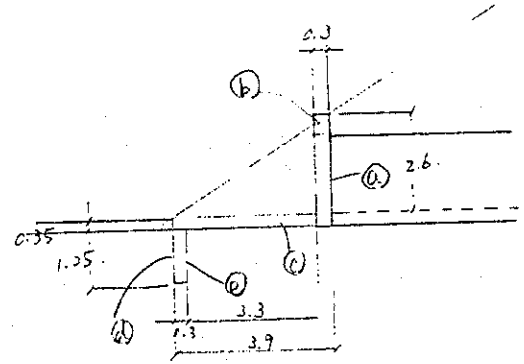

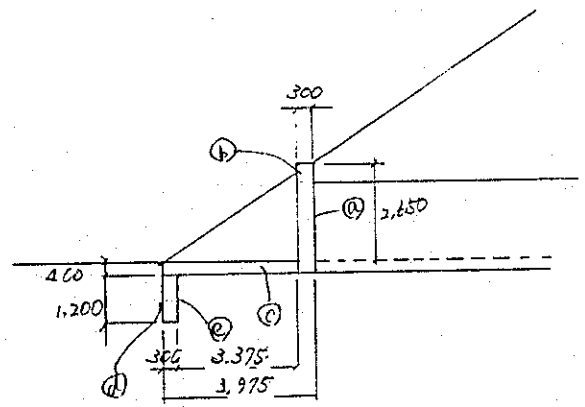

6792

Working Division:

Description	Calculation Details	Unit	Quantity	Remarks
.3 / 12	Formwork Fl finish			
	5. 2.0 × 2.0 (Ⅲ)			
	ⓐ (11.0 + 3.65) × 2.45 × 1/2 + 0.7 × 11.0			
	− 2.7 × 2.85 = 17.951 m²			
	ⓑ 0.7 × 0.35 × 2 = 0.49			
	ⓒ (3.70 × 1.6 − 3.4 × 1.15) × 2 = 4.02			
	ⓓ 1.6 × 2.7 = 4.32			
	ⓔ 1.15 × 2.7 = 3.105			
	29.886 m²			
	29.886 × 2 × 1 = 59.772	m²	59.772	
	6. 2.5 × 2.0 (Ⅰ)			
	ⓐ (11.35 + 4.3) × 2.35 × 1/2 + 0.7 × 11.35			
	− 3.1 × 2.75 = 17.809			
	ⓑ 0.7 × 0.3 × 2 = 0.42			
	ⓒ (3.675 × 1.6 − 3.375 × 1.2) × 2 = 3.660			
	ⓓ 1.6 × 3.1 = 4.96			
	ⓔ 1.2 × 3.1 = 3.72			
	30.569 m²			

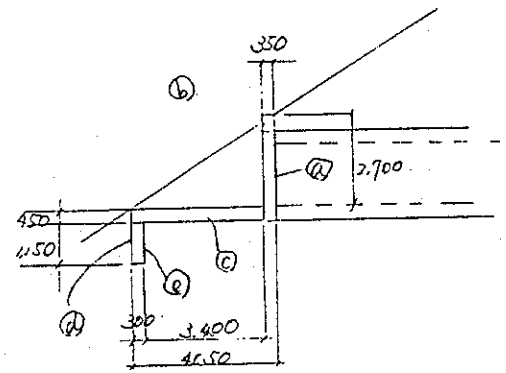

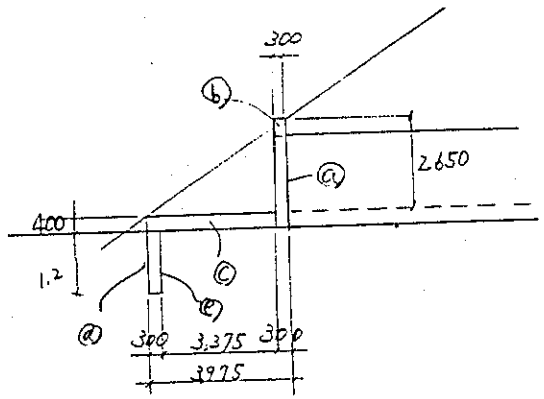

6-283

Working Division:

Description	Calculation Details	Unit	Quantity	Remarks
3 1/12	Formwork El finish			
	(Catch basin)			
	1.15 × 2.2 × 2 = 5.06			
	1.30 × 2.2 × 2 − 0.35π = 5.335			
	10.395 m²			
	10.395 × 8 = 83.16	m²	83.160	

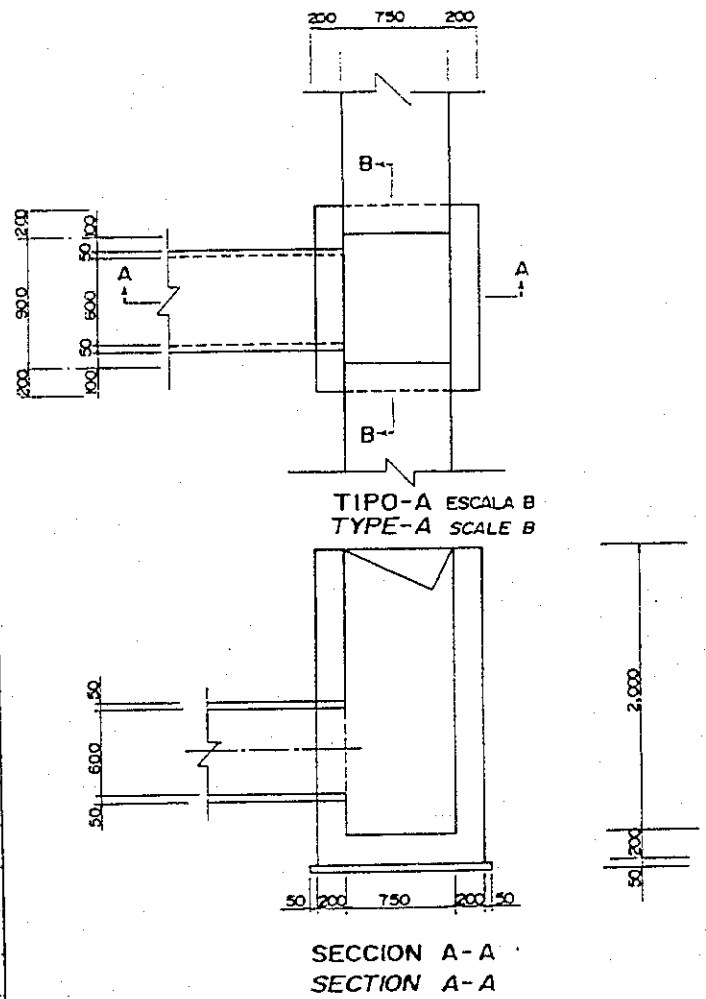

6-29K

Working Division:

Description	Calculation Details	Unit	Quantity	Remarks
3 113	Formwork F3 finish			
	(wing wall)			
	1. Ø600			
	ⓐ 0.1×1.1 + 0.8×0.65 − 0.3²π = 0.347 m²			
	ⓑ 0.975×0.65×½×2 = 0.634 m²			
	ⓒ 0.1×1.1 + 0.8×0.70 − 0.3²π = 0.387 m²			
	ⓓ 1.05×0.70×½×2 = 0.735 m²			
	2.103 m²			
	1.122 × 8 = 8.976	m²	8.976	

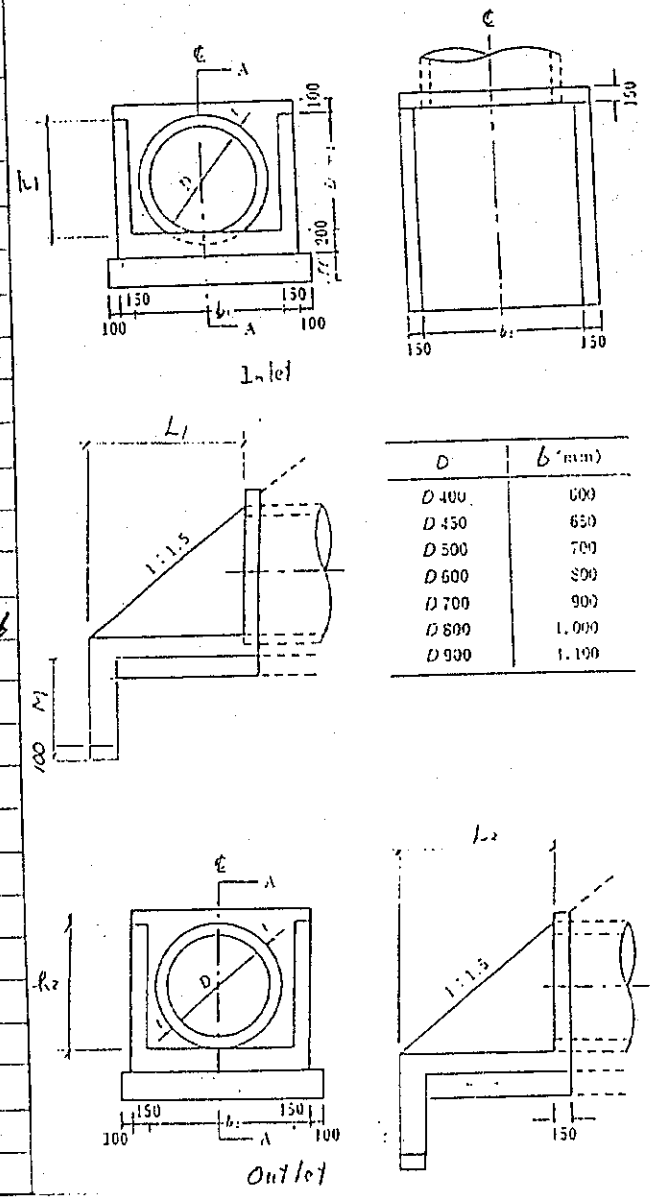

D	b (mm)
D 400	600
D 450	650
D 500	700
D 600	800
D 700	900
D 800	1,000
D 900	1,100

Ng-9

Working Division:

Description	Calculation Details	Unit	Quantity	Remarks
3 / 13	Formwork, F3 finish (wing wall)			
	2. Ø800			
	ⓐ 0.1 × 1.3 + 1.0 × 0.866 − 0.4² π = 0.493 m²			
	ⓑ 1.299 × 0.866 × 1/2 × 2 = 1.125 m²			
	ⓒ 0.1 × 1.3 + 1.0 × 0.932 − 0.4² π = 0.559 m²			
	ⓓ 1.398 × 0.932 × 1/2 × 2 = 1.303 m²			
	3.480 m²			
	3.480 × 4 = 13.920	m²	13.920	

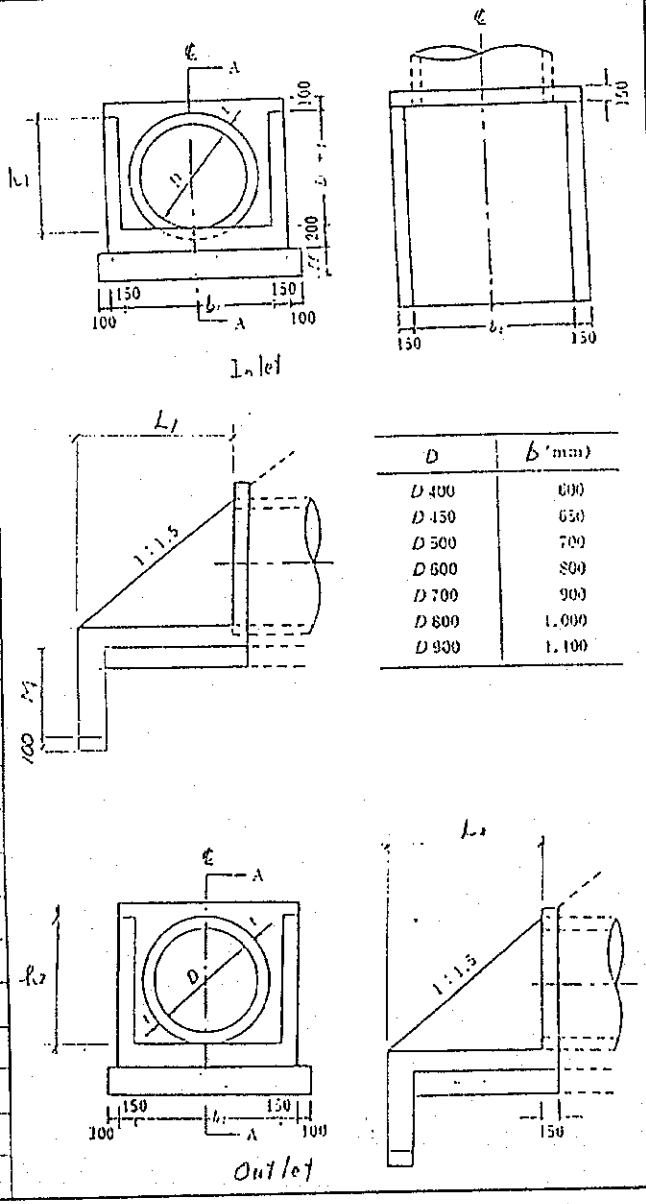

D	b (mm)
D 400	600
D 450	650
D 500	700
D 600	800
D 700	900
D 800	1,000
D 900	1,100

6-256

Working Division:

Description	Calculation Details	Unit	Quantity	Remarks
3 /13	Formwork, F3 finish (Wing wall)			
	1. 1.2 × 1.2 m (3.3 + 7.35) × 1.35/2 + 0.7 × 7.35 − 1.2 × 1.2 = 10.894 m²			
	2. 1.5 × 1.5 m (3.45 + 8.7) × 1.75/2 + 0.7 × 8.7 − 1.5² = 14.471 m²			
	3. 2.0 × 2.0 m (I) (10.7 + 3.95) × 2.35/2 + 0.7 × 10.7 − 2.0² = 19.971 m² 19.971 × 2 × 1 = 39.942	m²	39.942	
	4. 2.0 m × 2.0 m (II) (10.85 + 3.80) × 2.35/2 + 0.7 × 10.85 − 2.0² = 19.869 m²			

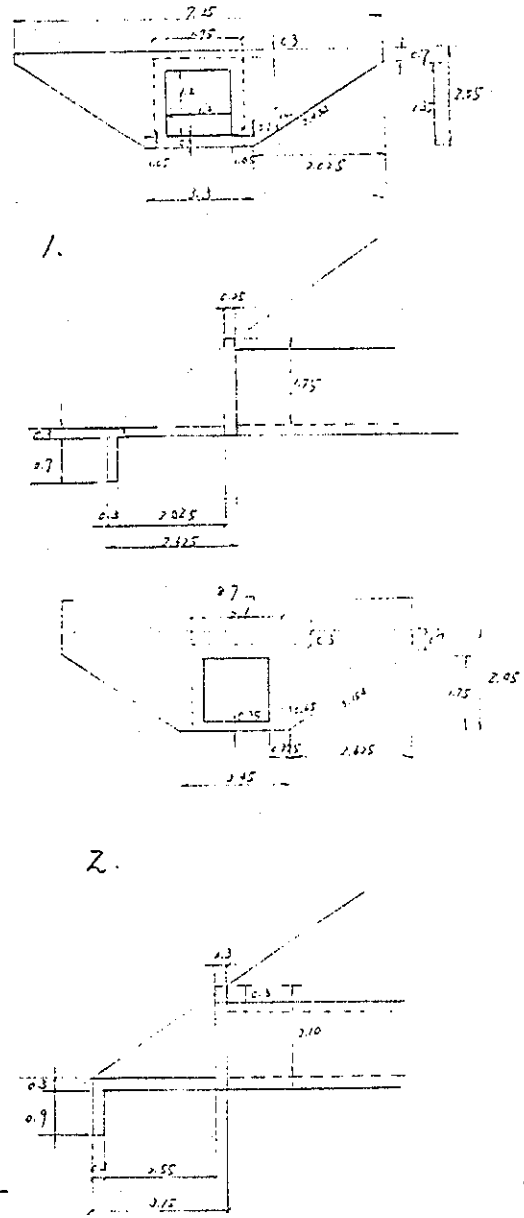

6-39

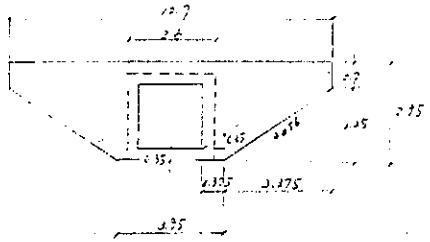

3.

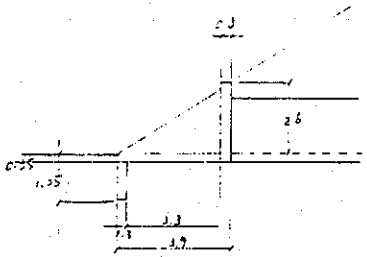

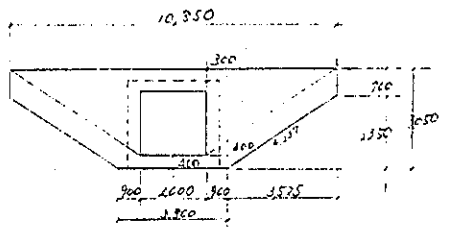
10,950
300
700
1,350
400
900
2000
900
3,525
3,900

4

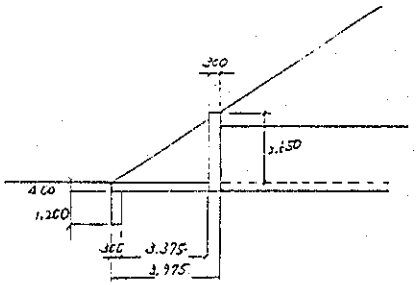
300
3,650
400
1,200
300
3,375
3,975

83-9

Working Division:

Description	Calculation Details	Unit	Quantity	Remarks
.3 1/3	Formwork F3, finish (wing wall)			
	5. 2.0 x 2.0 m (III)			
	(11 + 3.65) x 2.45 x 1/2 + 0.7 x 11			
	- 2.0² = 21.646 m²			
	21.646 x 2 x 1 = 43.292	m²	43.292	
	6. 2.5 x 2.0 (I)			
	(11.35 + 4.3) x 2.35 x 1/2 + 0.7 x 11.35			
	- 2.5 x 2.0 = 21.334 m²			
	7. 2.5 x 2.0 (II)			
	(11.5 + 4.15) x 2.4 x 1/2 + 0.7 x 11.5			
	- 2.5 x 2.0 = 21.830 m²			

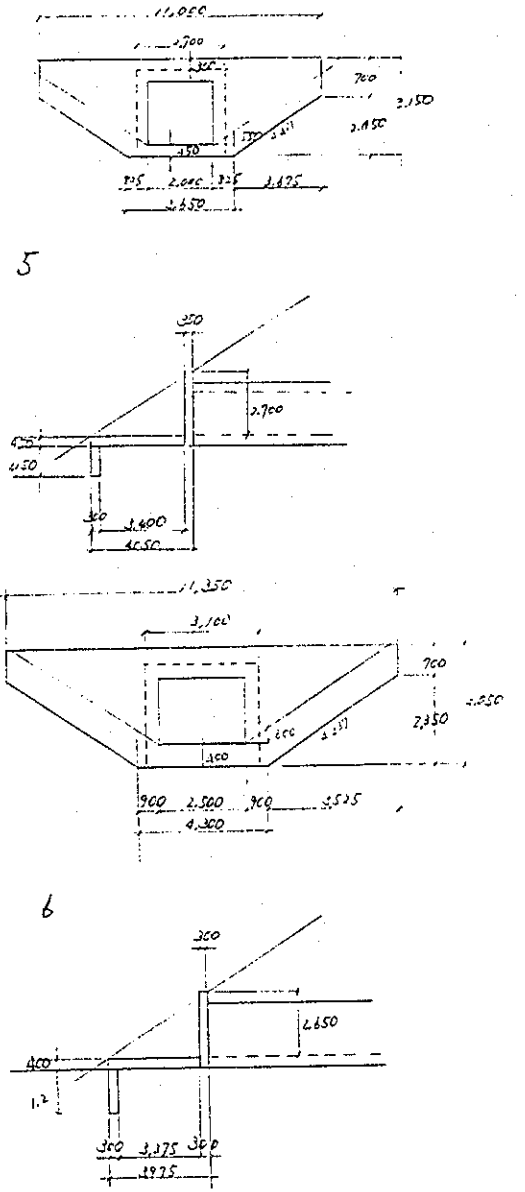

6-288

Working Division:

Description	Calculation Details	Unit	Quantity	Remarks
3 /13	Formwork F3 finish			
	(Catch basin)			
	0.75 × 2.0 × 2 = 3.0			
	0.90 × 2.0 × 2 − 0.375 = 3.317			
	6.317 m².			
	6.317 × 8 = 50.536	m²	50.536	

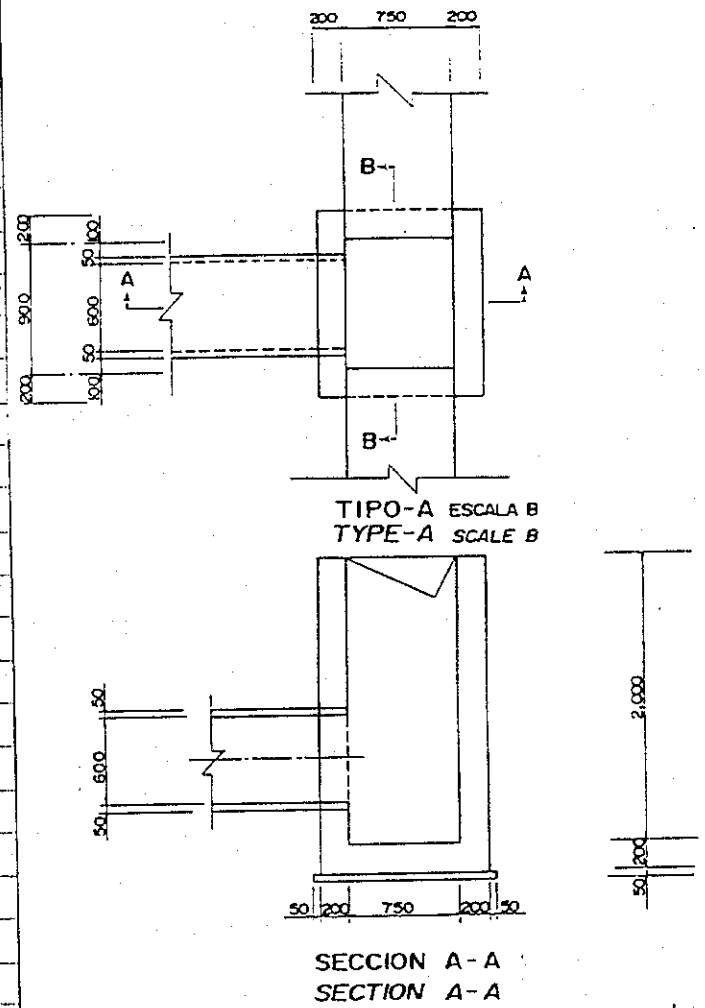

206-9

Working Division:

Description	Calculation Details	Unit	Quantity	Remarks
3 113	Formwork, F3 finish for concrete item 109 and 110:			
	(Side ditch). per 1m.			
	0.671 + 0.335 = 1.006 m²			
	1.006 × 4191.46 = 4216.609	m²	4,216.609	

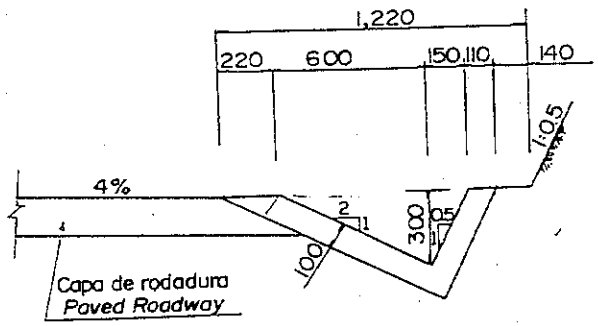

Working Division:

Description	Calculation Details	Unit	Quantity	Remarks
1. 3 /14	Reinforcing bars for concrete works			
	(wing wall)			
	80 kg / 1 m^3 of concrete volume			
	1. ø600			
	~~1.37 m^3 x 80 = 98.96 kg~~			
	0.77 x 80 = 61.6 kg			
	2. ø800			
	2.000 m^3 x 80 = 160 kg			
	160 x 4 = 640 kg			
	3. ø1.000			
	2.939 m^3 x 80 = 235.12 kg			

6-362

Working Division:

Description	Calculation Details	Unit	Quantity	Remarks
3 114	Reinforcing bars for concrete works (wing wall)			
	80 kg / m³ of concrete volume			
	1. 1.2 × 1.2 m			
	4.312 × 80 = 329.6 kg			
	2. 1.5 × 1.5 m			
	6.704 × 80 = 536.32 kg			
	3. 2.0 × 2.0 m (I)			
	10.242 × 80 = 819.36 kg			
	819.36 × 2 × 1 = 1,638.72			
	4. 2.0 × 2.0 m (II)			
	11.001 × 80 = 880.08 kg			
	5. 2.0 × 2.0 m (III)			
	13.004 × 80 = 1040.32 kg			
	1040.32 × 2 × 1 = 2080.64			

6-3-3

Working Division:

Description	Calculation Details	Unit	Quantity	Remarks
.3 114	Reinforcing bars for concrete works			
	(Catch basin)			
	80 kg/ 1m³ of concrete volume	ton	1.2	
	1.862 m³ x 80 kg/m³ = 148.96 m³			
	148.96 x 8 = 1191.68			

Working Division:

Description	Calculation Details	Unit	Quantity	Remarks
3 1/15	Gabion mattress, t = 500 mm			
	(Wing wall part)			
	1. Ø600			
	(0.8 + 0.3) × 5.0 × 0.5 = 2.75 m³			
	2.75 × 1/5 × 8 = 4.4	m³	4.4	
	2. Ø800			
	(1.5 + 0.3) × 5.0 × 0.5 = 3.25 m³	m³	26.0	
	3.25 × 2 × 4 = 26.0			
	3. Ø1,000			
	(1.7 + 0.3) × 5.0 × 0.5 = 3.75 m³			
	4. 1.2 × 1.2 m			
	(2.434 × 2 + 3.3) × 5.0 × 0.5 = 20.42 m³			
	5. 1.5 × 1.5 m			
	(3.154 × 2 + 3.45) × 5.0 × 0.5 = 24.395 m³			

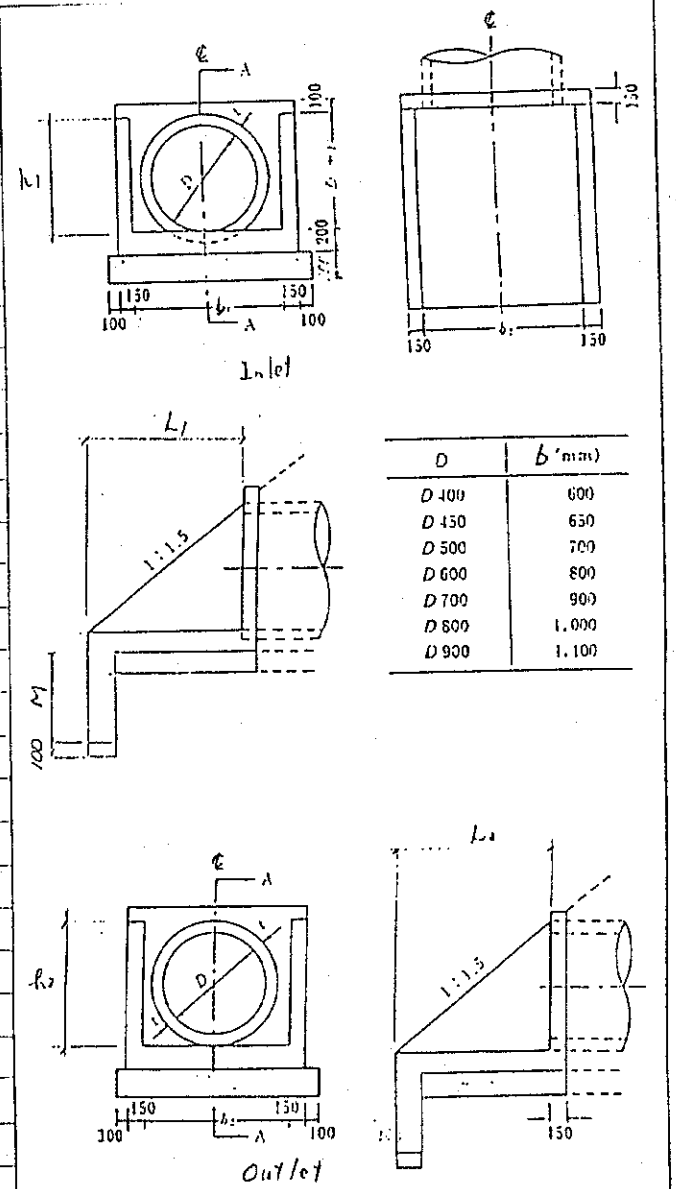

D	b (mm)
D 400	600
D 450	650
D 500	700
D 600	800
D 700	900
D 800	1,000
D 900	1,100