Conguillo Access Road (Membrillo ~ Conguillo) 6.1/01 Clearing

6-312

Conguillo Access Road			
Clearing		Total	Station
Length (m)	Area (m2)	Area (m2)	
16.0			0 + 0.000
17.5	335	335	0 + 20.000
22.0	277	277	0 + 34.000
16.7	310	310	0 + 50.000
26.0	939	939	0 + 94.000
36.0	1,257	1,257	0 + 134.540
39.5	797	797	0 + 155.660
15.2	110	110	0 + 159.670
21.5	373	373	0 + 180.000
20.0	415	415	0 + 200.000
15.5	355	355	0 + 220.000
19.0	345	345	0 + 240.000
23.5	425	425	0 + 260.000
21.5	450	450	0 + 280.000
21.5	430	430	0 + 300.000
20.7	422	422	0 + 320.000
17.0	377	377	0 + 340.000
27.0	440	440	0 + 360.000
43.0	315	315	0 + 369.000
29.5	399	399	0 + 380.000
13.0	289	289	0 + 393.600
11.0	77	77	0 + 400.000
37.0	480	480	0 + 420.000
30.0	750	750	0 + 440.000
25.3	563	563	0 + 457.790
21.0	904	904	0 + 496.840
21.5	607	607	0 + 525.400
14.0	776	776	0 + 569.120
35.5	625	625	0 + 594.370
15.0	461	461	0 + 613.630
12.0	86	86	0 + 620.000
21.0	330	330	0 + 640.000
11.5	325	325	0 + 660.000
14.0	106	106	0 + 668.350
13.0	157	157	0 + 680.000
31.3	443	443	0 + 700.000
18.0	493	493	0 + 720.000
17.5	432	432	0 + 744.320
20.0	75	75	0 + 748.320
18.0	222	222	0 + 760.000
16.5	173	173	0 + 770.000
14.0	305	305	0 + 790.000
10.0	170	170	0 + 804.200
11.0	11	11	0 + 805.270
22.5	247	247	0 + 820.000
21.5	220	220	0 + 830.000
14.7	181	181	0 + 840.000
15.5	302	302	0 + 860.000
21.0	365	365	0 + 880.000
14.0	262	262	0 + 894.970
15.7	39	39	0 + 897.610
15.0	651	651	0 + 940.000
36.0	310	310	0 + 960.000
22.0	353	353	0 + 978.580
26.0	926	926	1 + 17.150
26.3	480	480	1 + 35.520
16.7	621	621	1 + 64.420
	22,587	22,587	

Clearing		Total	Station
Length	Area (m2)	Area (m2)	
16.7			1 + 64.420
26.0	333	333	1 + 80.000
29.0	550	550	1 + 100.000
26.5	555	555	1 + 120.000
33.0	595	595	1 + 140.000
32.5	208	208	1 + 146.340
40.0	119	119	1 + 149.630
42.3	427	427	1 + 160.000
42.3	1,142	1,142	1 + 187.000
50.5	139	139	1 + 190.000
42.5	465	465	1 + 200.000
49.5	920	920	1 + 220.000
33.5	415	415	1 + 230.000
8.5	179	179	1 + 238.500
24.0	349	349	1 + 260.000
17.0	279	279	1 + 273.600
39.5	381	381	1 + 287.000
17.0	550	550	1 + 306.560
15.5	218	218	1 + 320.000
20.5	360	360	1 + 340.000
16.5	374	374	1 + 360.190
15.5	229	229	1 + 374.490
10.0	325	325	1 + 400.000
10.0	400	400	1 + 440.000
11.0	253	253	1 + 464.060
30.0	328	328	1 + 480.070
24.0	420	420	1 + 495.630
19.5	89	89	1 + 499.740
28.5	318	318	1 + 513.000
33.0	215	215	1 + 520.000
20.3	533	533	1 + 540.000
9.3	347	347	1 + 563.450
14.0	277	277	1 + 587.250
20.5	515	515	1 + 617.110
9.5	261	261	1 + 634.500
18.5	419	419	1 + 664.450
13.5	781	781	1 + 713.270
39.5	1,135	1,135	1 + 756.110
46.5	1,556	1,556	1 + 792.280
14.5	540	540	1 + 810.000
21.5	180	180	1 + 820.000
26.0	356	356	1 + 835.000
22.0	120	120	1 + 840.000
25.0	470	470	1 + 860.000
24.5	248	248	1 + 870.020
26.5	588	588	1 + 893.000
15.0	1,032	1,032	1 + 942.820
13.5	235	235	1 + 959.300
20.0	347	347	1 + 980.000
34.0	324	324	1 + 992.000
47.0	324	324	2 + 0.000
16.5	426	426	2 + 13.420
16.5	1,030	1,030	2 + 75.820
20.0	531	531	2 + 104.940
19.0	574	574	2 + 134.380
63.5	982	982	2 + 158.180
34.0	576	576	2 + 170.000
17.0	255	255	2 + 180.000
18.5	355	355	2 + 200.000
19.5	281	281	2 + 214.810
	26,735	26,735	Sub Total
	49,322	49,322	Total

Clearing		Total	Station
Length	Area (m2)	Area (m2)	
19.5			2 + 214.810
15.5	204	204	2 + 226.490
32.0	321	321	2 + 240.000
30.5	625	625	2 + 260.000
39.5	700	700	2 + 280.000
48.5	449	449	2 + 290.200
36.0	429	429	2 + 300.360
24.5	292	292	2 + 310.000
40.7	326	326	2 + 320.000
18.0	294	294	2 + 330.000
26.0	220	220	2 + 340.000
33.5	407	407	2 + 353.670
34.7	184	184	2 + 359.070
31.3	684	684	2 + 418.750
24.5	593	593	2 + 440.000
22.0	465	465	2 + 460.000
29.0	510	510	2 + 480.000
26.0	550	550	2 + 500.000
22.0	198	198	2 + 508.240
26.0	329	329	2 + 521.930
20.0	396	396	2 + 539.160
18.5	353	353	2 + 557.510
23.0	259	259	2 + 570.000
21.5	223	223	2 + 580.000
44.0	655	655	2 + 600.000
20.0	345	345	2 + 610.790
12.0	115	115	2 + 617.010
19.5	328	328	2 + 635.000
13.0	81	81	2 + 640.000
24.0	370	370	2 + 660.000
18.0	420	420	2 + 680.000
20.5	349	349	2 + 698.150
32.0	944	944	2 + 734.110
26.5	729	729	2 + 759.020
33.3	627	627	2 + 780.000
46.0	793	793	2 + 800.000
34.5	805	805	2 + 820.000
39.5	370	370	2 + 830.000
19.5	345	345	2 + 841.700
19.3	42	42	2 + 843.890
14.5	272	272	2 + 860.000
19.3	338	338	2 + 880.000
26.0	340	340	2 + 895.000
22.5	243	243	2 + 905.000
15.0	238	238	2 + 917.700
22.0	228	228	2 + 930.000
40.0	310	310	2 + 940.000
67.5	778	778	2 + 954.480
52.5	152	152	2 + 957.020
33.0	982	982	2 + 980.000
15.7	487	487	3 + 0.000
14.0	297	297	3 + 20.000
14.5	116	116	3 + 28.130
17.0	625	625	3 + 67.840
23.5	1,006	1,006	3 + 117.530
25.5	551	551	3 + 140.000
24.2	497	497	3 + 160.000
26.5	507	507	3 + 180.000
26.0	220	220	3 + 188.390
21.5	1,175	1,175	3 + 237.880
	25,693	25,693	Sub Total
	75,015	75,015	Total

Clearing		Total	Station
Length (m)	Area (m2)	Area (m2)	
21.5			3 + 237.880
17.5	431	431	3 + 260.000
21.5	390	390	3 + 280.000
36.5	580	580	3 + 300.000
41.0	442	442	3 + 311.410
47.0	378	378	3 + 320.000
48.0	950	950	3 + 340.000
32.5	805	805	3 + 360.000
20.5	530	530	3 + 380.000
15.3	198	198	3 + 391.080
15.0	741	741	3 + 440.000
9.5	139	139	3 + 451.350
16.0	365	365	3 + 480.000
22.5	385	385	3 + 500.000
18.3	543	543	3 + 526.630
18.5	246	246	3 + 540.000
16.5	981	981	3 + 596.030
17.0	652	652	3 + 634.970
28.0	451	451	3 + 655.000
21.5	644	644	3 + 680.000
31.5	550	550	3 + 700.000
39.0	705	705	3 + 720.000
41.3	402	402	3 + 730.000
41.0	412	412	3 + 740.000
27.5	685	685	3 + 760.000
18.0	455	455	3 + 780.000
31.3	247	247	3 + 790.000
22.5	269	269	3 + 800.000
51.0	735	735	3 + 820.000
18.3	493	493	3 + 834.240
41.0	675	675	3 + 857.000
33.5	1,456	1,456	3 + 896.080
16.3	585	585	3 + 919.590
27.0	1,191	1,191	3 + 974.610
14.7	1,305	1,305	4 + 37.220
11.0	117	117	4 + 46.340
7.5	126	126	4 + 60.000
10.5	180	180	4 + 80.000
14.0	245	245	4 + 100.000
13.5	95	95	4 + 106.890
11.5	555	555	4 + 151.290
13.5	109	109	4 + 160.000
15.0	285	285	4 + 180.000
17.0	651	651	4 + 220.660
18.5	343	343	4 + 240.000
17.5	180	180	4 + 250.000
13.0	153	153	4 + 260.000
36.5	495	495	4 + 280.000
27.5	640	640	4 + 300.000
15.0	491	491	4 + 323.100
15.5	163	163	4 + 333.820
18.5	700	700	4 + 375.000
13.0	394	394	4 + 400.000
40.0	530	530	4 + 420.000
45.0	850	850	4 + 440.000
53.0	294	294	4 + 446.000
17.0	1,280	1,280	4 + 482.560
27.0	707	707	4 + 514.700
27.3	634	634	4 + 538.040
12.0	548	548	4 + 565.940
	30,780	30,780	Sub Total
	105,795	105,795	Total

Clearing		Total	Station
Length	Area (m2)	Area (m2)	
12.0			4 + 565.940
15.0	272	272	4 + 586.120
8.5	163	163	4 + 600.000
17.5	260	260	4 + 620.000
15.0	325	325	4 + 640.000
37.0	520	520	4 + 660.000
34.5	802	802	4 + 682.420
16.0	618	618	4 + 706.900
21.3	565	565	4 + 737.180
11.0	797	797	4 + 786.500
28.0	830	830	4 + 829.080
33.0	321	321	4 + 846.150
12.0	312	312	4 + 860.000
9.7	217	217	4 + 880.000
13.0	227	227	4 + 900.000
16.0	290	290	4 + 920.000
19.0	700	700	4 + 960.000
14.5	335	335	4 + 980.000
44.5	590	590	5 + 0.000
12.5	334	334	5 + 11.720
19.0	516	516	5 + 44.500
18.0	495	495	5 + 71.270
7.5	620	620	5 + 119.920
41.0	973	973	5 + 160.000
36.5	773	773	5 + 180.000
50.0	865	865	5 + 200.000
34.0	1,040	1,040	5 + 220.000
49.5	716	716	5 + 233.830
51.7	572	572	5 + 245.140
48.0	741	741	5 + 260.000
14.0	620	620	5 + 280.000
15.0	290	290	5 + 300.000
16.5	170	170	5 + 310.000
18.0	367	367	5 + 332.100
17.0	138	138	5 + 340.000
28.5	455	455	5 + 360.000
15.0	435	435	5 + 380.000
21.0	279	279	5 + 395.520
13.0	127	127	5 + 403.000
24.0	338	338	5 + 421.250
36.5	822	822	5 + 448.430
44.5	736	736	5 + 466.600
20.0	1,008	1,008	5 + 497.850
41.5	681	681	5 + 520.000
35.0	765	765	5 + 540.000
35.3	703	703	5 + 560.000
34.5	395	395	5 + 571.310
31.3	2,339	2,339	5 + 642.400
18.0	995	995	5 + 682.750
38.0	1,522	1,522	5 + 737.120
23.5	1,617	1,617	5 + 788.050
27.0	295	295	5 + 799.290
28.0	570	570	5 + 820.000
28.5	565	565	5 + 840.000
19.0	475	475	5 + 860.000
44.0	630	630	5 + 880.000
40.5	845	845	5 + 900.000
45.0	641	641	5 + 915.000
36.5	468	468	5 + 924.230
38.0	817	817	5 + 941.520
	36,098	36,098	Sub Total
	141,893	141,893	Total

6.1/01 Clearing

Clearing		Total	Station
Length	Area	Area	
(m)	(m2)	(m2)	
38.0			5 + 941.520
44.5	1,836	1,836	5 + 986.020
43.3	590	590	5 + 999.450
38.5	840	840	6 + 20.000
28.5	670	670	6 + 40.000
29.0	514	514	6 + 57.890
27.0	1,327	1,327	6 + 105.300
27.0	1,313	1,313	6 + 153.940
27.3	478	478	6 + 171.550
27.5	1,071	1,071	6 + 210.620
25.8	250	250	6 + 220.000
30.0	558	558	6 + 240.000
32.0	620	620	6 + 260.000
33.3	691	691	6 + 281.100
29.5	595	595	6 + 300.000
24.0	335	335	6 + 320.000
23.0	412	412	6 + 337.540
40.5	814	814	6 + 360.000
49.0	493	493	6 + 370.000
49.0	490	490	6 + 380.000
39.3	713	713	6 + 393.170
26.0	291	291	6 + 400.000
30.0	605	605	6 + 421.600
30.3	721	721	6 + 445.500
20.5	1,270	1,270	6 + 495.490
20.0	91	91	6 + 500.000
16.0	360	360	6 + 520.000
13.0	290	290	6 + 540.000
29.5	425	425	6 + 560.000
23.0	525	525	6 + 580.000
25.0	435	435	6 + 598.120
18.0	845	845	6 + 637.420
20.0	1,016	1,016	6 + 690.890
13.5	530	530	6 + 722.550
13.0	325	325	6 + 747.070
13.0	357	357	6 + 774.500
10.5	359	359	6 + 805.030
30.5	837	837	6 + 845.840
30.0	353	353	6 + 857.500
38.0	765	765	6 + 880.000
44.5	825	825	6 + 900.000
39.0	573	573	6 + 913.720
37.5	890	890	6 + 937.000
39.5	2,100	2,100	6 + 991.540
36.5	1,507	1,507	7 + 31.200
38.5	1,619	1,619	7 + 74.300
52.0	2,384	2,384	7 + 127.070
29.5	1,093	1,093	7 + 153.900
16.0	692	692	7 + 184.330
11.5	427	427	7 + 215.360
8.0	312	312	7 + 247.360
22.0	412	412	7 + 274.850
13.5	358	358	7 + 295.000
31.5	563	563	7 + 320.000
10.0	415	415	7 + 340.000
10.0	200	200	7 + 360.000
7.5	175	175	7 + 380.000
7.5	151	151	7 + 400.120
8.5	354	354	7 + 444.330
11.5	413	413	7 + 485.580
	40,672	40,672	Sub Total
	182,564	182,564	Total

Clearing		Total	Station
Length	Area	Area	
(m)	(m2)	(m2)	
11.5			7 + 485.580
16.5	690	690	7 + 534.850
17.0	572	572	7 + 569.020
18.0	180	180	7 + 579.320
13.0	321	321	7 + 600.000
11.0	120	120	7 + 610.000
15.0	130	130	7 + 620.000
27.0	420	420	7 + 640.000
37.0	640	640	7 + 660.000
39.0	760	760	7 + 680.000
28.5	268	268	7 + 687.930
12.0	941	941	7 + 734.390
9.5	503	503	7 + 781.190
11.5	57	57	7 + 786.650
9.0	137	137	7 + 800.000
11.5	205	205	7 + 820.000
13.0	490	490	7 + 860.000
15.0	259	259	7 + 878.530
13.5	149	149	7 + 889.000
14.3	153	153	7 + 900.000
13.0	273	273	7 + 920.000
13.5	133	133	7 + 930.000
12.0	128	128	7 + 940.000
12.0	240	240	7 + 960.000
12.0	240	240	7 + 980.000
35.0	654	654	8 + 7.820
47.5	986	986	8 + 31.720
46.0	387	387	8 + 40.000
52.0	980	980	8 + 60.000
47.5	995	995	8 + 80.000
47.5	475	475	8 + 90.000
46.5	470	470	8 + 100.000
41.0	875	875	8 + 120.000
32.0	730	730	8 + 140.000
39.0	710	710	8 + 160.000
25.3	643	643	8 + 180.000
16.0	413	413	8 + 200.000
13.0	145	145	8 + 210.000
9.5	113	113	8 + 220.000
7.5	170	170	8 + 240.000
9.5	106	106	8 + 252.420
12.0	349	349	8 + 283.030
46.0	1,069	1,069	8 + 321.780
22.5	1,668	1,668	8 + 370.470
29.5	612	612	8 + 394.000
42.0	640	640	8 + 411.900
31.5	811	811	8 + 433.980
36.5	919	919	8 + 461.000
46.0	528	528	8 + 473.800
11.0	730	730	8 + 499.420
8.3	388	388	8 + 539.620
10.0	126	126	8 + 553.390
8.5	61	61	8 + 560.000
24.5	330	330	8 + 580.000
35.5	600	600	8 + 600.000
15.3	508	508	8 + 620.000
12.0	175	175	8 + 632.810
14.5	537	537	8 + 673.330
9.0	328	328	8 + 701.220
28.5	715	715	8 + 739.330
	27,952	27,952	Sub Total
	210,516	210,516	Total

Clearing		Total	Station
Length	Area	Area	
(m)	(m2)	(m2)	
28.5			8 + 739.330
59.0	1,961	1,961	8 + 784.150
58.0	1,200	1,200	8 + 804.660
23.0	1,339	1,339	8 + 837.710
8.7	519	519	8 + 870.440
9.7	453	453	8 + 919.700
16.5	207	207	8 + 935.500
23.0	89	89	8 + 940.000
8.0	310	310	8 + 960.000
10.0	180	180	8 + 980.000
13.0	115	115	8 + 990.000
9.0	110	110	9 + 0.000
10.3	193	193	9 + 20.000
20.0	303	303	9 + 40.010
24.5	767	767	9 + 74.470
31.0	153	153	9 + 80.000
40.0	124	124	9 + 83.500
11.8	427	427	9 + 100.000
10.5	112	112	9 + 110.000
11.0	108	108	9 + 120.000
27.0	380	380	9 + 140.000
33.0	600	600	9 + 160.000
35.0	102	102	9 + 163.000
17.0	442	442	9 + 180.000
11.5	285	285	9 + 200.000
14.0	255	255	9 + 220.000
10.5	245	245	9 + 240.000
11.8	51	51	9 + 244.600
14.0	117	117	9 + 253.670
32.5	1,100	1,100	9 + 303.000
37.5	1,378	1,378	9 + 340.370
18.5	1,104	1,104	9 + 379.800
18.0	555	555	9 + 410.190
15.0	484	484	9 + 439.530
16.5	665	665	9 + 481.770
54.0	757	757	9 + 503.240
34.5	520	520	9 + 514.990
31.0	164	164	9 + 520.000
15.5	465	465	9 + 540.000
29.3	448	448	9 + 560.000
37.0	663	663	9 + 580.000
38.0	750	750	9 + 600.000
36.0	370	370	9 + 610.000
34.5	353	353	9 + 620.000
29.0	635	635	9 + 640.000
27.5	141	141	9 + 645.000
16.3	329	329	9 + 660.000
23.7	264	264	9 + 673.200
19.8	521	521	9 + 692.140
26.0	810	810	9 + 732.490
18.5	849	849	9 + 770.660
28.0	897	897	9 + 809.250
12.0	731	731	9 + 845.800
14.0	292	292	9 + 868.240
13.0	159	159	9 + 880.000
10.0	230	230	9 + 900.000
20.0	300	300	9 + 920.000
39.9	590	590	9 + 940.000
25.5	645	645	9 + 960.000
23.0	157	157	9 + 966.460
	28,471	28,471	Sub Total
	238,987	238,987	Total

Clearing		Total	Station
Length	Area	Area	
(m)	(m2)	(m2)	
23.0			9 + 966.460
19.5	1,058	1,058	10 + 16.250
50.0	1,519	1,519	10 + 59.970
24.0	1,146	1,146	10 + 90.950
10.0	566	566	10 + 124.260
24.7	808	808	10 + 170.840
26.0	380	380	10 + 185.840
14.0	849	849	10 + 228.310
15.0	636	636	10 + 272.200
22.5	450	450	10 + 296.200
28.0	891	891	10 + 331.500
9.5	443	443	10 + 355.150
11.0	319	319	10 + 386.260
14.5	155	155	10 + 398.380
28.0	459	459	10 + 420.000
26.0	243	243	10 + 429.000
9.0	193	193	10 + 440.000
11.0	200	200	10 + 460.000
15.0	260	260	10 + 480.000
16.0	179	179	10 + 491.580
17.0	433	433	10 + 517.800
9.5	417	417	10 + 549.250
24.0	315	315	10 + 568.040
29.0	763	763	10 + 596.840
15.0	837	837	10 + 634.870
14.0	74	74	10 + 640.000
12.5	265	265	10 + 660.000
11.5	120	120	10 + 670.000
16.0	138	138	10 + 680.000
22.5	385	385	10 + 700.000
93.5	870	870	10 + 715.000
43.0	928	928	10 + 728.600
7.0	733	733	10 + 757.920
21.0	656	656	10 + 804.750
32.5	1,210	1,210	10 + 850.000
32.5	506	506	10 + 865.570
29.0	1,001	1,001	10 + 898.110
28.0	189	189	10 + 904.740
25.0	401	401	10 + 920.000
17.0	420	420	10 + 940.000
12.5	133	133	10 + 949.000
15.0	151	151	10 + 960.000
15.5	447	447	10 + 989.340
15.5	958	958	11 + 51.170
11.5	457	457	11 + 85.000
15.0	199	199	11 + 100.000
21.5	548	548	11 + 130.000
14.5	1,260	1,260	11 + 200.000
20.0	690	690	11 + 240.000
14.5	776	776	11 + 285.000
12.0	464	464	11 + 320.000
16.0	700	700	11 + 370.000
20.5	274	274	11 + 385.000
21.5	735	735	11 + 420.000
19.5	820	820	11 + 460.000
25.5	563	563	11 + 485.000
23.0	1,698	1,698	11 + 555.000
23.0	1,035	1,035	11 + 600.000
22.0	1,125	1,125	11 + 650.000
19.0	1,025	1,025	11 + 700.000
	35,476	35,476	Sub Total
	274,463	274,463	Total

Clearing		Total	Station
Length	Area	Area	
(m)	(m2)	(m2)	
19.0			11 + 700.000
17.0	720	720	11 + 740.000
13.0	475	475	11 + 771.680
			+
			+
			+
			+
			+
			+
			+
			+
			+
			+
			+
			+
			+
			+
			+
			+
			+
			+
			+
			+
			+
			+
			+
			+
			+
			+
			+
			+
			+
			+
			+
			+
			+
			+
			+
			+
			+
			+
			+
			+
			+
			+
			+
			+
			+
			+
			+
			+
			+
			+
			+
			+
			+
			+
			+
			+
			+
	1,195	1,195	Sub Total
	275,658	275,658	Total

Quantity Calculation 6.1 Earthwork

Access Road Name : Conguillo Access Road (Membrillo~Buenaventura)

Station	Distance (m)	Earthwork														Slope Protection (Sod facing)					Station
		Cut Volume							Embankment Volume				Balance A - B (m3)	Accumulated Volume (m3)	Lateral Volume (m3)	Left Side		Right Side		Total Area (m2)	
		Common (C=0.90)			Weathered Rock (C=1.10)			Total Corrected Cut Volume A (m3)	Embankment Section			Total Embankment Volume B (m3)				Slope Length (m)	Area (m2)	Slope Length (m)	Area (m2)		
		Sectional Area (m2)	Ground Volume (m3)	Corrected Volume (m3)	Sectional Area (m2)	Ground Volume (m3)	Corrected Volume (m3)		Sectional Area (m2)	Volume (m3)	Vary Volume (m3)										
0 + 0.000		0.0			0.0				0.0					0		0.0		0.0			0 + 0.000
0 + 50.000	50.000	16.8	420	378	0.0	0	0	378	0.0	0		0	378	378	0	2.5	63	2.4	60	123	0 + 50.000
0 + 100.000	50.000	36.8	1,340	1,206	32.0	800	880	2,086	0.0	0		0	2,086	2,464	0	4.6	178	3.2	140	318	0 + 100.000
0 + 150.000	50.000	27.4	1,605	1,445	9.6	1,040	1,144	2,589	0.0	0		0	2,589	5,053	0	4.7	233	2.3	138	370	0 + 150.000
0 + 200.000	50.000	29.2	1,415	1,274	16.4	650	715	1,989	0.0	0		0	1,989	7,041	0	6.0	268	0.8	78	345	0 + 200.000
0 + 250.000	50.000	33.6	1,570	1,413	6.0	560	616	2,029	0.0	0		0	2,029	9,070	0	9.5	388	0.0	20	408	0 + 250.000
0 + 300.000	50.000	0.0	840	756	0.0	150	165	921	104.0	2,600		2,600	-1,679	7,391	921	2.3	295	26.5	663	958	0 + 300.000
0 + 350.000	50.000	0.0	0	0	0.0	0	0	0	83.6	4,690		4,690	-4,690	2,701	0	4.2	163	16.5	1,075	1,238	0 + 350.000
0 + 400.000	50.000	1.6	40	36	0.0	0	0	36	36.0	2,990		2,990	-2,954	-253	36	5.2	235	6.0	563	798	0 + 400.000
0 + 450.000	50.000	32.6	855	770	0.0	0	0	770	44.0	2,000		2,000	-1,231	-1,484	770	6.0	280	7.0	325	605	0 + 450.000
0 + 500.000	50.000	23.0	1,390	1,251	1.2	30	33	1,284	0.0	1,100		1,100	184	-1,300	1,100	2.0	200	4.0	275	475	0 + 500.000
0 + 550.000	50.000	34.6	1,440	1,296	0.0	30	33	1,329	34.6	865		865	464	-836	865	2.8	120	7.7	293	413	0 + 550.000
0 + 600.000	50.000	28.0	1,565	1,409	8.0	200	220	1,629	0.0	865		865	764	-72	865	7.0	245	1.5	230	475	0 + 600.000
0 + 650.000	50.000	19.2	1,180	1,062	5.0	325	358	1,420	0.0	0		0	1,420	1,348	0	6.0	325	1.8	83	408	0 + 650.000
0 + 700.000	50.000	48.8	1,700	1,530	24.8	745	820	2,350	0.0	0		0	2,350	3,697	0	12.5	463	0.0	45	508	0 + 700.000
0 + 750.000	50.000	26.0	1,870	1,683	8.8	840	924	2,607	86.0	2,150		2,150	457	4,154	2,150	9.5	550	30.0	750	1,300	0 + 750.000
0 + 800.000	50.000	46.0	1,800	1,620	44.0	1,320	1,452	3,072	0.0	2,150		2,150	922	5,076	2,150	7.0	413	2.0	800	1,213	0 + 800.000
0 + 850.000	50.000	42.8	2,220	1,998	28.8	1,820	2,002	4,000	0.0	0		0	4,000	9,076	0	10.0	425	2.5	113	538	0 + 850.000
0 + 900.000	50.000	10.0	1,320	1,188	0.0	720	792	1,980	50.4	1,260		1,260	720	9,796	1,260	4.5	363	29.0	788	1,150	0 + 900.000
0 + 950.000	50.000	0.0	250	225	0.0	0	0	225	103.2	3,840		3,840	-3,615	6,181	225	1.5	150	24.5	1,338	1,488	0 + 950.000
0 + 1000.000	50.000	8.0	200	180	0.0	0	0	180	5.6	2,720		2,720	-2,540	3,641	180	3.5	125	7.0	788	913	0 + 1000.000
0 + 1050.000	50.000	31.6	990	891	16.8	420	462	1,353	0.0	140		140	1,213	4,854	140	5.5	225	0.0	175	400	0 + 1050.000
0 + 1100.000	50.000	50.8	2,060	1,854	44.8	1,540	1,694	3,548	0.0	0		0	3,548	8,402	0	12.5	450	1.2	30	480	0 + 1100.000
0 + 1150.000	50.000	43.2	2,350	2,115	53.6	2,460	2,706	4,821	0.0	0		0	4,821	13,223	0	4.5	425	2.0	80	505	0 + 1150.000
0 + 1200.000	50.000	13.6	1,420	1,278	6.4	1,500	1,650	2,928	194.0	4,850		4,850	-1,922	11,301	2,928	4.0	213	56.5	1,463	1,675	0 + 1200.000
0 + 1250.000	50.000	0.0	340	306	0.0	160	176	482	483.6	16,940		16,940	-16,458	-5,157	482	0.0	100	60.0	2,913	3,013	0 + 1250.000
0 + 1300.000	50.000	44.8	1,120	1,008	68.0	1,700	1,870	2,878	0.0	12,090		12,090	-9,212	-14,369	2,878	6.5	163	2.0	1,550	1,713	0 + 1300.000
0 + 1350.000	50.000	52.0	2,420	2,178	100.0	4,200	4,620	6,798	0.0	0		0	6,798	-7,571	0	9.0	388	2.0	100	488	0 + 1350.000
0 + 1400.000	50.000	50.4	2,560	2,304	69.0	4,225	4,648	6,952	0.0	0		0	6,952	-620	0	10.0	475	2.4	110	585	0 + 1400.000
0 + 1450.000	50.000	43.2	2,340	2,106	48.4	2,935	3,229	5,335	0.0	0		0	5,335	4,715	0	7.5	438	2.0	110	548	0 + 1450.000
0 + 1500.000	50.000	36.0	1,980	1,782	42.8	2,280	2,508	4,290	0.0	0		0	4,290	9,005	0	4.5	300	3.0	125	425	0 + 1500.000
0 + 1550.000	50.000	21.6	1,440	1,296	9.6	1,310	1,441	2,737	0.0	0		0	2,737	11,742	0	5.4	248	0.0	75	323	0 + 1550.000
0 + 1600.000	50.000	14.4	900	810	0.0	240	264	1,074	4.0	100		100	974	12,716	100	6.5	298	6.5	163	460	0 + 1600.000
0 + 1650.000	50.000	7.2	540	486	0.0	0	0	486	0.0	100		100	386	13,102	100	2.2	218	0.5	175	393	0 + 1650.000
0 + 1700.000	50.000	20.8	700	630	4.0	100	110	740	0.0	0		0	740	13,842	0	6.0	205	0.0	13	218	0 + 1700.000
0 + 1750.000	50.000	10.8	790	711	0.0	100	110	821	20.0	500		500	321	14,163	500	9.2	380	20.0	500	880	0 + 1750.000
0 + 1800.000	50.000	21.6	810	729	2.4	60	66	795	0.0	500		500	295	14,458	500	7.5	418	0.0	500	918	0 + 1800.000
0 + 1850.000	50.000	62.0	2,090	1,881	186.4	4,720	5,192	7,073	0.0	0		0	7,073	21,531	0	3.7	280	4.5	113	393	0 + 1850.000
0 + 1900.000	50.000	86.4	3,710	3,339	371.6	13,950	15,345	18,684	0.0	0		0	18,684	40,215	0	3.5	180	3.5	200	380	0 + 1900.000
0 + 1950.000	50.000	34.0	3,010	2,709	21.6	9,830	10,813	13,522	0.0	0		0	13,522	53,737	0	3.8	183	6.0	238	420	0 + 1950.000
0 + 2000.000	50.000	0.0	850	765	0.0	540	594	1,359	40.0	1,000		1,000	359	54,096	1,000	12.5	408	0.0	150	558	0 + 2000.000
0 + 2050.000	50.000	0.0	0	0	0.0	0	0	0	7.2	1,180		1,180	-1,180	52,916	0	4.5	425	0.0	0	425	0 + 2050.000
0 + 2100.000	50.000	0.0	0	0	0.0	0	0	0	28.4	890		890	-890	52,026	0	11.8	408	0.0	0	408	0 + 2100.000
0 + 2150.000	50.000	0.0	0	0	0.0	0	0	0	114.4	3,570		3,570	-3,570	48,456	0	29.0	1,020	0.0	0	1,020	0 + 2150.000
0 + 2200.000	50.000	0.0	0	0	0.0	0	0	0	24.8	3,480		3,480	-3,480	44,976	0	12.5	1,038	0.0	0	1,038	0 + 2200.000
0 + 2250.000	50.000	0.0	0	0	0.0	0	0	0	16.0	1,020		1,020	-1,020	43,956	0	9.0	538	0.0	0	538	0 + 2250.000
0 + 2300.000	50.000	20.0	500	450	2.0	50	55	505	0.0	400		400	105	44,061	400	0.0	225	4.5	113	338	0 + 2300.000
0 + 2350.000	50.000	1.8	545	491	0.0	50	55	546	13.6	340		340	206	44,267	340	9.0	225	1.5	150	375	0 + 2350.000
0 + 2400.000	50.000	1.4	80	72	0.0	0	0	72	26.8	1,010		1,010	-938	43,329	72	17.5	663	1.0	63	725	0 + 2400.000
0 + 2450.000	50.000	1.6	75	68	0.0	0	0	68	40.4	1,680		1,680	-1,613	41,716	68	27.0	1,113	2.0	75	1,188	0 + 2450.000
0 + 2500.000	50.000	7.6	230	207	0.0	0	0	207	2.4	1,070		1,070	-863	40,853	207	5.0	800	3.0	125	925	0 + 2500.000
0 + 2550.000	50.000	0.0	190	171	0.0	0	0	171	11.6	350		350	-179	40,674	171	5.0	250	0.0	75	325	0 + 2550.000
0 + 2600.000	50.000	1.1	28	25	0.0	0	0	25	1.6	330		330	-305	40,369	25	2.0	175	0.0	0	175	0 + 2600.000
0 + 2650.000	50.000	68.8	1,748	1,573	145.6	3,640	4,004	5,577	0.0	40		40	5,537	45,906	40	9.0	275	2.5	63	338	0 + 2650.000
0 + 2700.000	50.000	57.6	3,160	2,844	138.8	7,110	7,821	10,665	0.0	0		0	10,665	56,571	0	4.5	338	2.0	113	450	0 + 2700.000
0 + 2750.000	50.000	26.0	2,090	1,881	34.4	4,330	4,763	6,644	0.0	0		0	6,644	63,215	0	6.0	263	0.0	50	313	0 + 2750.000
0 + 2800.000	50.000	45.2	1,780	1,602	53.6	2,200	2,420	4,022	0.0	0		0	4,022	67,237	0	7.5	338	2.0	50	388	0 + 2800.000
Total	2800.000		65,865	59,279		78,880	86,768	146,047		78,810		78,810	67,237		20,472		19,558		18,215	37,773	

Station	Distance	Earthwork														Slope Protection					Station
		Cut Volume							Embankment Volume				Balance A - B	Accumlated Volume	Lateral Volume	Left Side		Right Side		Total Area	
		Common (C=0.90)			Weathered Rock (C=1.10)			Total Corrected Cut Volume A	Embankment Section			Total Embankment Volume B				Slope Length	Area	Slope Length	Area		
	(m)	Sectional Area (m2)	Ground Volume (m3)	Corrected Volume (m3)	Sectional Area (m2)	Ground Volume (m3)	Corrected Volume (m3)	(m3)	Sectional Area (m2)	Volume (m3)	Vary Volume (m3)	(m3)	(m3)	(m3)	(m3)	(m)	(m2)	(m)	(m2)	(m2)	
0 + 2800.000		45.2			53.6				0.0					67,237		7.5		2.0			0 + 2800.000
0 + 2850.000	50.000	55.2	2,510	2,259	160.0	5,340	5,874	8,133	0.0	0		0	8,133	75,370	0	4.5	300	1.5	88	388	0 + 2850.000
0 + 2900.000	50.000	41.2	2,410	2,169	24.0	4,600	5,060	7,229	0.0	0		0	7,229	82,599	0	9.7	355	0.6	53	408	0 + 2900.000
0 + 2950.000	50.000	29.2	1,760	1,584	14.8	970	1,067	2,651	0.0	0		0	2,651	85,250	0	7.5	430	0.0	15	445	0 + 2950.000
0 + 3000.000	50.000	27.2	1,410	1,269	22.4	930	1,023	2,292	0.0	0		0	2,292	87,542	0	10.0	438	0.0	0	438	0 + 3000.000
0 + 3050.000	50.000	34.8	1,550	1,395	20.0	1,060	1,166	2,561	0.0	0		0	2,561	90,103	0	10.3	508	0.0	0	508	0 + 3050.000
0 + 3100.000	50.000	31.6	1,660	1,494	5.6	640	704	2,198	0.0	0		0	2,198	92,301	0	13.7	600	0.0	0	600	0 + 3100.000
0 + 3150.000	50.000	29.2	1,520	1,368	34.4	1,000	1,100	2,468	0.0	0		0	2,468	94,769	0	5.8	488	2.8	70	558	0 + 3150.000
0 + 3200.000	50.000	29.6	1,470	1,323	8.0	1,060	1,166	2,489	0.0	0		0	2,489	97,258	0	8.0	345	1.0	95	440	0 + 3200.000
0 + 3250.000	50.000	28.8	1,460	1,314	13.2	530	583	1,897	0.0	0		0	1,897	99,155	0	6.8	370	1.5	63	433	0 + 3250.000
0 + 3300.000	50.000	32.0	1,520	1,368	10.0	580	638	2,006	0.0	0		0	2,006	101,161	0	10.0	420	1.2	68	488	0 + 3300.000
0 + 3350.000	50.000	30.8	1,570	1,413	13.6	590	649	2,062	0.0	0		0	2,062	103,223	0	7.8	445	1.3	63	508	0 + 3350.000
0 + 3400.000	50.000	34.0	1,620	1,458	29.6	1,080	1,188	2,646	0.0	0		0	2,646	105,869	0	7.0	370	2.0	83	453	0 + 3400.000
0 + 3450.000	50.000	34.4	1,710	1,539	14.4	1,100	1,210	2,749	0.0	0		0	2,749	108,618	0	11.0	450	1.3	83	533	0 + 3450.000
0 + 3500.000	50.000	31.2	1,640	1,476	20.4	870	957	2,433	0.0	0		0	2,433	111,051	0	7.3	458	1.3	65	523	0 + 3500.000
0 + 3550.000	50.000	79.2	2,760	2,484	246.8	6,680	7,348	9,832	0.0	0		0	9,832	120,883	0	9.0	408	1.5	70	478	0 + 3550.000
0 + 3600.000	50.000	70.0	3,730	3,357	258.4	12,630	13,893	17,250	0.0	0		0	17,250	138,133	0	2.0	275	1.8	83	358	0 + 3600.000
0 + 3650.000	50.000	32.8	2,570	2,313	27.2	7,140	7,854	10,167	0.0	0		0	10,167	148,300	0	5.5	188	1.5	83	270	0 + 3650.000
0 + 3700.000	50.000	28.0	1,520	1,368	26.8	1,350	1,485	2,853	0.0	0		0	2,853	151,153	0	3.7	230	0.0	38	268	0 + 3700.000
0 + 3750.000	50.000	70.4	2,460	2,214	140.0	4,170	4,587	6,801	0.0	0		0	6,801	157,954	0	3.3	175	3.5	88	263	0 + 3750.000
0 + 3800.000	50.000	76.4	3,670	3,303	160.8	7,520	8,272	11,575	0.0	0		0	11,575	169,529	0	7.0	258	0.0	88	345	0 + 3800.000
0 + 3850.000	50.000	15.6	2,300	2,070	1.6	4,060	4,466	6,536	18.8	470		470	6,066	175,595	470	7.0	350	11.5	288	638	0 + 3850.000
0 + 3900.000	50.000	60.8	1,910	1,719	104.0	2,640	2,904	4,623	0.0	470		470	4,153	179,748	470	7.5	363	1.7	330	693	0 + 3900.000
0 + 3950.000	50.000	71.2	3,300	2,970	183.6	7,190	7,909	10,879	0.0	0		0	10,879	190,627	0	5.0	313	2.0	93	405	0 + 3950.000
0 + 4000.000	50.000	5.0	1,905	1,715	199.2	9,570	10,527	12,242	0.0	0		0	12,242	202,868	0	0.0	125	0.0	50	175	0 + 4000.000
0 + 4050.000	50.000	90.0	2,375	2,138	251.0	11,255	12,381	14,518	0.0	0		0	14,518	217,386	0	4.0	100	0.0	0	100	0 + 4050.000
0 + 4100.000	50.000	72.4	4,060	3,654	166.4	10,435	11,479	15,133	0.0	0		0	15,133	232,519	0	13.0	425	1.8	45	470	0 + 4100.000
0 + 4150.000	50.000	68.8	3,530	3,177	110.4	6,920	7,612	10,789	0.0	0		0	10,789	243,308	0	6.3	483	1.3	78	560	0 + 4150.000
0 + 4200.000	50.000	76.8	3,640	3,276	243.2	8,840	9,724	13,000	0.0	0		0	13,000	256,308	0	7.0	333	2.3	90	423	0 + 4200.000
0 + 4250.000	50.000	64.0	3,520	3,168	136.0	9,480	10,428	13,596	0.0	0		0	13,596	269,904	0	6.7	343	2.5	120	463	0 + 4250.000
0 + 4300.000	50.000	47.6	2,790	2,511	96.8	5,820	6,402	8,913	0.0	0		0	8,913	278,817	0	6.3	325	2.0	113	438	0 + 4300.000
0 + 4350.000	50.000	31.6	1,980	1,782	36.4	3,330	3,663	5,445	0.0	0		0	5,445	284,262	0	4.5	270	2.0	100	370	0 + 4350.000
0 + 4400.000	50.000	0.0	790	711	0.0	910	1,001	1,712	60.0	1,500		1,500	212	284,474	1,500	0.0	113	19.0	525	638	0 + 4400.000
0 + 4450.000	50.000	53.2	1,330	1,197	190.0	4,750	5,225	6,422	0.0	1,500		1,500	4,922	289,396	1,500	5.0	125	2.0	525	650	0 + 4450.000
0 + 4500.000	50.000	25.2	1,960	1,764	8.0	4,950	5,445	7,209	0.0	0		0	7,209	296,605	0	9.0	350	0.0	50	400	0 + 4500.000
0 + 4550.000	50.000	50.0	1,880	1,692	58.0	1,650	1,815	3,507	0.0	0		0	3,507	300,112	0	11.5	513	1.8	45	558	0 + 4550.000
0 + 4600.000	50.000	34.4	2,110	1,899	18.0	1,900	2,090	3,989	0.0	0		0	3,989	304,101	0	8.0	488	3.0	120	608	0 + 4600.000
0 + 4650.000	50.000	26.0	1,510	1,359	11.2	730	803	2,162	0.0	0		0	2,162	306,263	0	6.5	363	0.0	75	438	0 + 4650.000
0 + 4700.000	50.000	35.6	1,540	1,386	37.2	1,210	1,331	2,717	0.0	0		0	2,717	308,980	0	4.5	275	3.0	75	350	0 + 4700.000
0 + 4750.000	50.000	84.8	3,010	2,709	450.8	12,200	13,420	16,129	0.0	0		0	16,129	325,109	0	3.0	188	3.0	150	338	0 + 4750.000
0 + 4800.000	50.000	110.0	4,870	4,383	593.6	26,110	28,721	33,104	0.0	0		0	33,104	358,213	0	4.0	175	4.5	188	363	0 + 4800.000
0 + 4850.000	50.000	58.0	4,200	3,780	120.0	17,840	19,624	23,404	0.0	0		0	23,404	381,617	0	3.8	195	4.3	220	415	0 + 4850.000
0 + 4900.000	50.000	0.0	1,450	1,305	0.0	3,000	3,300	4,605	441.2	11,030		11,030	-6,425	375,192	4,605	37.8	1,040	11.5	395	1,435	0 + 4900.000
0 + 4950.000	50.000	0.0	0	0	0.0	0	0	0	306.0	18,680		18,680	-18,680	356,512	0	41.7	1,988	7.8	483	2,470	+
0 + 5000.000	50.000	34.0	850	765	18.4	460	506	1,271	0.0	7,650		7,650	-6,379	350,133	1,271	1.0	1,068	9.5	433	1,500	+
0 + 5050.000	50.000	58.0	2,300	2,070	52.8	1,780	1,958	4,028	0.0	0		0	4,028	354,161	0	0.0	25	5.0	363	388	+
0 + 5100.000	50.000	88.8	3,670	3,303	332.0	9,620	10,582	13,885	0.0	0		0	13,885	368,046	0	2.0	50	6.5	288	338	+
0 + 5150.000	50.000	106.4	4,880	4,392	422.0	18,850	20,735	25,127	0.0	0		0	25,127	393,173	0	2.5	113	8.0	363	475	+
0 + 5200.000	50.000	70.4	4,420	3,978	214.8	15,920	17,512	21,490	0.0	0		0	21,490	414,663	0	2.2	118	6.3	358	475	+
0 + 5250.000	50.000	47.6	2,950	2,655	76.8	7,290	8,019	10,674	0.0	0		0	10,674	425,337	0	2.2	110	7.5	345	455	+
0 + 5300.000	50.000	60.8	2,710	2,439	213.2	7,250	7,975	10,414	0.0	0		0	10,414	435,751	0	1.5	93	6.0	338	430	+
0 + 5350.000	50.000	81.6	3,560	3,204	210.8	10,600	11,660	14,864	0.0	0		0	14,864	450,615	0	2.0	88	4.8	270	358	+
0 + 5400.000	50.000	69.6	3,780	3,402	206.8	10,440	11,484	14,886	0.0	0		0	14,886	465,501	0	2.1	103	8.0	320	423	+
0 + 5450.000	50.000	73.6	3,580	3,222	138.8	8,640	9,504	12,726	0.0	0		0	12,726	478,227	0	1.8	98	9.5	438	535	+
0 + 5500.000	50.000	24.4	2,450	2,205	1.6	3,510	3,861	6,066	0.0	0		0	6,066	484,293	0	0.0	45	13.0	563	608	+
0 + 5550.000	50.000	51.6	1,900	1,710	63.6	1,630	1,793	3,503	0.0	0		0	3,503	487,796	0	2.0	50	13.0	650	700	+
0 + 5600.000	50.000	52.0	2,590	2,331	123.2	4,670	5,137	7,468	0.0	0		0	7,468	495,264	0	2.0	100	5.3	458	558	+
0 + 5650.000	50.000	49.6	2,540	2,286	33.6	3,920	4,312	6,598	0.0	0		0	6,598	501,862	0	2.3	108	17.8	578	685	+
0 + 5700.000	50.000	41.2	2,270	2,043	40.4	1,850	2,035	4,078	0.0	0		0	4,078	505,940	0	1.8	103	9.8	690	793	+
0 + 5750.000	50.000	35.6	1,920	1,728	16.8	1,430	1,573	3,301	0.0	0		0	3,301	509,241	0	2.0	95	9.1	473	568	+
Sub Total	2,950.000		142,830	128,565		322,490	354,739	483,304		41,300		41,300	442,004		9,816		19,108		12,268	31,375	Sub Total
Total	5,750.000		208,715	187,844		401,370	441,507	629,351		120,110		120,110	509,241		30,288		38,665		30,483	69,148	Total

6-345

Station	Distance	Earthwork														Slope Protection					Station
		Cut Volume							Embankment Volume				Balance	Accumulated	Lateral	Left Side		Right Side		Total	
		Common (C=0.90)			Weathered Rock (C=1.10)			Total	Embankment Section			Total									
	(m)	Sectional Area (m2)	Ground Volume (m3)	Corrected Volume (m3)	Sectional Area (m2)	Ground Volume (m3)	Corrected Volume (m3)	Corrected Cut Volume A (m3)	Sectional Area (m2)	Volume (m3)	Vary Volume (m3)	Embankment Volume B (m3)	A - B (m3)	Volume (m3)	Volume (m3)	Slope Length (m)	Area (m2)	Slope Length (m)	Area (m2)	Area (m2)	
0 + 5750.000		35.6			16.8				0.0					509,241		2.0		9.1			0 + 5750.000
0 + 5800.000	50.000	26.0	1,540	1,386	5.6	560	616	2,002	0.0	0		0	2,002	511,243	0	0.0	50	10.5	490	540	0 + 5800.000
0 + 5850.000	50.000	33.2	1,480	1,332	12.4	450	495	1,827	0.0	0		0	1,827	513,070	0	0.0	0	9.8	508	508	0 + 5850.000
0 + 5900.000	50.000	49.2	2,060	1,854	81.6	2,350	2,585	4,439	0.0	0		0	4,439	517,509	0	2.3	58	9.0	470	528	0 + 5900.000
0 + 5950.000	50.000	50.4	2,490	2,241	137.2	5,470	6,017	8,258	0.0	0		0	8,258	525,767	0	2.5	120	0.0	225	345	0 + 5950.000
0 + 6000.000	50.000	5.2	1,390	1,251	62.0	4,980	5,478	6,729	25.6	640		640	6,089	531,856	640	14.5	425	0.0	0	425	0 + 6000.000
0 + 6050.000	50.000	45.6	1,270	1,143	32.4	2,360	2,596	3,739	0.0	640		640	3,099	534,955	640	2.8	433	10.5	263	695	0 + 6050.000
0 + 6100.000	50.000	25.0	1,765	1,589	1.6	850	935	2,524	0.0	0		0	2,524	537,478	0	1.4	105	5.7	405	510	0 + 6100.000
0 + 6150.000	50.000	28.0	1,325	1,193	3.6	130	143	1,336	0.0	0		0	1,336	538,814	0	2.5	98	6.0	293	390	0 + 6150.000
0 + 6200.000	50.000	18.0	1,150	1,035	0.8	110	121	1,156	2.4	60		60	1,096	539,910	60	7.0	238	9.0	375	613	0 + 6200.000
0 + 6250.000	50.000	1.6	490	441	0.0	20	22	463	62.0	1,610		1,610	-1,147	538,763	463	33.0	1,000	2.3	283	1,283	0 + 6250.000
0 + 6300.000	50.000	18.4	500	450	1.2	30	33	483	0.0	1,550		1,550	-1,067	537,696	483	0.0	825	6.0	208	1,033	0 + 6300.000
0 + 6350.000	50.000	40.8	1,480	1,332	54.4	1,390	1,529	2,861	0.0	0		0	2,861	540,557	0	6.5	163	3.0	225	388	0 + 6350.000
0 + 6400.000	50.000	0.0	1,020	918	0.0	1,360	1,496	2,414	23.2	580		580	1,834	542,391	580	0.0	163	11.5	363	525	0 + 6400.000
0 + 6450.000	50.000	8.0	200	180	0.0	0	0	180	1.2	610		610	-430	541,961	180	3.5	88	2.0	338	425	0 + 6450.000
0 + 6500.000	50.000	10.8	470	423	0.0	0	0	423	0.0	30		30	393	542,354	30	4.0	188	0.0	50	238	0 + 6500.000
0 + 6550.000	50.000	14.4	630	567	0.8	20	22	589	2.4	60		60	529	542,883	60	8.5	313	7.0	175	488	0 + 6550.000
0 + 6600.000	50.000	5.2	490	441	0.0	20	22	463	3.2	140		140	323	543,206	140	4.5	325	3.5	263	588	0 + 6600.000
0 + 6650.000	50.000	0.0	130	117	0.0	0	0	117	72.0	1,880		1,880	-1,763	541,443	117	15.0	488	6.2	243	730	0 + 6650.000
0 + 6700.000	50.000	0.0	0	0	0.0	0	0	0	44.8	2,920		2,920	-2,920	538,523	0	18.5	838	0.0	155	993	0 + 6700.000
0 + 6750.000	50.000	26.4	660	594	1.6	40	44	638	0.0	1,120		1,120	-482	538,041	638	2.0	513	4.0	100	613	0 + 6750.000
0 + 6800.000	50.000	1.2	690	621	0.0	40	44	665	0.0	0		0	665	538,706	0	0.0	50	0.0	100	150	0 + 6800.000
0 + 6850.000	50.000	45.2	1,160	1,044	100.8	2,520	2,772	3,816	0.0	0		0	3,816	542,522	0	2.0	50	4.0	100	150	0 + 6850.000
0 + 6900.000	50.000	40.0	2,130	1,917	25.6	3,160	3,476	5,393	0.0	0		0	5,393	547,915	0	1.7	93	15.2	480	573	0 + 6900.000
0 + 6950.000	50.000	56.8	2,420	2,178	91.2	2,920	3,212	5,390	0.0	0		0	5,390	553,305	0	1.6	83	7.5	568	650	0 + 6950.000
0 + 7000.000	50.000	24.8	2,040	1,836	13.2	2,610	2,871	4,707	0.0	0		0	4,707	558,012	0	1.0	65	4.5	300	365	0 + 7000.000
0 + 7050.000	50.000	24.0	1,220	1,098	7.6	520	572	1,670	0.0	0		0	1,670	559,682	0	2.3	83	3.4	198	280	0 + 7050.000
0 + 7100.000	50.000	0.0	600	540	0.0	190	209	749	28.0	700		700	49	559,731	700	8.5	270	0.0	85	355	0 + 7100.000
0 + 7150.000	50.000	1.2	30	27	0.0	0	0	27	18.0	1,150		1,150	-1,123	558,608	27	10.0	463	2.3	58	520	0 + 7150.000
0 + 7200.000	50.000	17.0	455	410	0.0	0	0	410	0.0	450		450	-41	558,567	410	0.0	250	5.2	188	438	0 + 7200.000
0 + 7250.000	50.000	37.0	1,350	1,215	16.0	400	440	1,655	0.0	0		0	1,655	560,222	0	3.0	75	10.0	380	455	0 + 7250.000
0 + 7300.000	50.000	76.5	2,838	2,554	228.0	6,100	6,710	9,264	0.0	0		0	9,264	569,486	0	2.7	143	4.3	358	500	0 + 7300.000
0 + 7350.000	50.000	5.0	2,038	1,834	0.0	5,700	6,270	8,104	166.5	4,163		4,163	3,941	573,427	4,163	49.0	1,293	7.0	283	1,575	0 + 7350.000
0 + 7400.000	50.000	26.5	788	709	11.0	275	303	1,011	0.0	4,163		4,163	-3,151	570,276	1,011	0.0	1,225	7.5	363	1,588	0 + 7400.000
0 + 7450.000	50.000	40.5	1,675	1,508	41.0	1,300	1,430	2,938	0.0	0		0	2,938	573,213	0	2.5	63	4.0	288	350	0 + 7450.000
0 + 7500.000	50.000	70.0	2,763	2,486	234.0	6,875	7,563	10,049	0.0	0		0	10,049	583,262	0	2.3	120	4.5	213	333	0 + 7500.000
0 + 7550.000	50.000	30.0	2,500	2,250	11.0	6,125	6,738	8,988	6.0	150		150	8,838	592,100	150	9.0	283	10.0	363	645	0 + 7550.000
0 + 7600.000	50.000	12.0	1,050	945	1.0	300	330	1,275	4.0	250		250	1,025	593,125	250	7.0	400	5.5	388	788	0 + 7600.000
0 + 7650.000	50.000	9.5	538	484	0.0	25	28	511	17.5	538		538	-26	593,098	511	17.8	620	6.0	288	908	0 + 7650.000
0 + 7700.000	50.000	82.0	2,288	2,059	32.0	800	880	2,939	0.0	438		438	2,501	595,600	438	0.0	445	14.2	505	950	0 + 7700.000
0 + 7750.000	50.000	24.5	2,663	2,396	6.0	950	1,045	3,441	134.0	3,350		3,350	91	595,691	3,350	45.1	1,128	12.2	660	1,788	0 + 7750.000
0 + 7800.000	50.000	20.0	1,113	1,001	6.0	300	330	1,331	15.5	3,738		3,738	-2,406	593,285	1,331	19.0	1,603	7.2	485	2,088	0 + 7800.000
0 + 7850.000	50.000	30.5	1,263	1,136	28.5	863	949	2,085	0.0	388		388	1,698	594,982	388	0.0	475	6.0	330	805	0 + 7850.000
0 + 7900.000	50.000	0.0	763	686	0.0	713	784	1,470	6.5	163		163	1,308	596,290	163	3.2	80	2.0	200	280	0 + 7900.000
0 + 7950.000	50.000	34.0	850	765	41.5	1,038	1,141	1,906	0.0	163		163	1,744	598,033	163	2.5	143	4.7	168	310	0 + 7950.000
0 + 8000.000	50.000	47.0	2,025	1,823	70.5	2,800	3,080	4,903	0.0	0		0	4,903	602,936	0	2.2	118	4.0	218	335	0 + 8000.000
0 + 8050.000	50.000	35.5	2,063	1,856	38.5	2,725	2,998	4,854	0.0	0		0	4,854	607,790	0	2.2	110	5.0	225	335	0 + 8050.000
0 + 8100.000	50.000	41.0	1,913	1,721	16.5	1,375	1,513	3,234	0.0	0		0	3,234	611,023	0	0.0	55	10.5	388	443	0 + 8100.000
0 + 8150.000	50.000	35.0	1,900	1,710	25.0	1,038	1,141	2,851	0.0	0		0	2,851	610,641	0	2.0	50	8.2	468	518	0 + 8150.000
0 + 8200.000	50.000	48.5	2,088	1,879	54.5	1,988	2,186	4,065	0.0	0		0	4,065	614,706	0	0.0	50	9.0	430	480	0 + 8200.000
0 + 8250.000	50.000	49.0	2,438	2,194	58.0	2,813	3,094	5,288	0.0	0		0	5,288	619,993	0	2.0	50	10.5	488	538	0 + 8250.000
0 + 8300.000	50.000	45.0	2,350	2,115	30.0	2,200	2,420	4,535	0.0	0		0	4,535	624,528	0	1.7	93	9.0	488	580	0 + 8300.000
0 + 8350.000	50.000	33.0	1,950	1,755	11.5	1,038	1,141	2,896	0.0	0		0	2,896	627,425	0	0.6	58	10.5	488	545	0 + 8350.000
0 + 8400.000	50.000	12.0	1,125	1,013	0.0	288	316	1,329	7.5	188		188	1,141	628,566	188	11.0	290	8.0	463	753	0 + 8400.000
0 + 8450.000	50.000	31.0	1,075	968	14.5	363	399	1,366	0.0	188		188	1,179	629,745	188	0.0	275	10.0	450	725	0 + 8450.000
0 + 8500.000	50.000	42.0	1,825	1,643	67.0	2,038	2,241	3,884	0.0	0		0	3,884	633,628	0	0.0	0	5.5	388	388	0 + 8500.000
0 + 8550.000	50.000	19.5	1,538	1,384	14.0	2,025	2,228	3,611	0.0	0		0	3,611	637,240	0	0.0	0	10.0	388	388	0 + 8550.000
0 + 8600.000	50.000	0.0	488	439	0.0	350	385	824	64.5	1,613		1,613	-789	636,451	824	17.0	425	5.0	375	800	0 + 8600.000
0 + 8650.000	50.000	4.5	113	101	0.0	0	0	101	114.0	4,463		4,463	-4,361	632,090	101	37.0	1,350	5.5	263	1,613	0 + 8650.000
0 + 8700.000	50.000	46.0	1,263	1,136	73.0	1,825	2,008	3,144	0.0	2,850		2,850	294	632,383	2,850	2.5	988	5.3	270	1,258	0 + 8700.000
0 + 8750.000	50.000	73.0	2,973	2,678	125.0	4,950	5,445	8,123	0.0	0		0	8,123	640,506	0	1.8	108	3.0	208	315	0 + 8750.000
Sub Total	3,000.000		82,885	74,597		91,675	100,843	175,439		40,940		40,940	134,499		21,234		19,940		18,763	38,703	Sub Total
Total	8,750.000		291,600	262,440		493,045	542,350	804,790		161,050		161,050	643,740		51,522		58,605		49,245	107,850	Total

6-356

Station	Distance (m)	Earthwork														Slope Protection					Station
		Cut Volume							Embankment Volume				Balance A - B (m3)	Accumulated Volume (m3)	Lateral Volume (m3)	Left Side		Right Side		Total Area (m2)	
		Common (C=0.90)			Weathered Rock (C=1.10)			Total Corrected Cut Volume A (m3)	Embankment Section			Total Embankment Volume B (m3)				Slope Length (m)	Area (m2)	Slope Length (m)	Area (m2)		
		Sectional Area (m2)	Ground Volume (m3)	Corrected Volume (m3)	Sectional Area (m2)	Ground Volume (m3)	Corrected Volume (m3)		Sectional Area (m2)	Volume (m3)	Vary Volume (m3)										
0 + 8750.000		73.0			125.0				0.0					640,506		1.8		3.0			0 + 8750.000
0 + 8800.000	50.000	53.5	3,163	2,846	89.0	5,350	5,885	8,731	0.0	0		0	8,731	649,237	0	2.0	95	8.0	275	370	0 + 8800.000
0 + 8850.000	50.000	28.5	2,050	1,845	11.0	2,500	2,750	4,595	0.0	0		0	4,595	653,832	0	0.0	50	9.5	438	488	0 + 8850.000
0 + 8900.000	50.000	21.0	1,238	1,114	2.5	338	371	1,485	0.0	0		0	1,485	655,317	0	0.0	0	7.0	413	413	0 + 8900.000
0 + 8950.000	50.000	34.5	1,388	1,249	27.0	738	811	2,060	0.0	0		0	2,060	657,377	0	2.0	50	7.5	363	413	0 + 8950.000
0 + 9001.125	51.125	20.4	1,403	1,263	20.0	1,201	1,322	2,585	0.0	0		0	2,585	659,962	0	4.6	169	0.0	192	360	0 + 9001.125
0 + 9053.205	52.080	0.0	531	478	0.0	521	573	1,051	96.4	2,510		2,510	-1,459	658,502	1,051	0.0	120	13.2	344	464	0 + 9053.205
0 + 9093.345	40.140	23.6	474	426	21.6	434	477	903	0.0	1,935		1,935	-1,032	657,471	903	7.1	142	0.0	265	407	0 + 9093.345
0 + 9101.295	7.950	24.0	189	170	38.0	237	261	431	0.0	0		0	431	657,902	0	6.4	54	1.0	4	58	0 + 9101.295
0 + 9111.465	10.170	26.8	258	232	22.0	305	336	568	0.0	0		0	568	658,470	0	7.9	73	0.9	10	82	0 + 9111.465
0 + 9131.465	20.000	20.4	472	425	19.6	416	458	882	0.0	0		0	882	659,352	0	6.9	148	0.0	9	157	0 + 9131.465
0 + 9151.465	20.000	31.2	515	464	46.4	660	726	1,190	0.0	0		0	1,190	660,543	0	6.0	129	1.5	15	144	0 + 9151.465
0 + 9174.945	23.480	33.6	761	685	56.8	1,212	1,333	2,017	0.0	0		0	2,017	662,560	0	5.5	135	1.4	34	169	0 + 9174.945
0 + 9184.025	9.080	25.2	267	240	52.0	494	543	784	0.0	0		0	784	663,344	0	5.0	48	1.0	11	59	0 + 9184.025
0 + 9191.465	7.440	22.8	179	161	54.4	396	435	596	0.0	0		0	596	663,940	0	5.0	37	1.0	7	45	0 + 9191.465
0 + 9211.465	20.000	20.8	436	392	34.8	892	981	1,374	0.0	0		0	1,374	665,313	0	5.0	100	0.0	10	110	0 + 9211.465
0 + 9231.465	20.000	20.4	412	371	32.4	672	739	1,110	0.0	0		0	1,110	666,423	0	4.9	99	0.0	0	99	0 + 9231.465
0 + 9251.465	20.000	5.6	260	234	11.2	436	480	714	0.0	0		0	714	667,137	0	0.0	49	0.0	0	49	0 + 9251.465
0 + 9271.465	20.000	24.0	296	266	8.4	196	216	482	0.0	0		0	482	667,619	0	6.1	61	0.0	0	61	0 + 9271.465
0 + 9291.465	20.000	14.0	380	342	3.6	120	132	474	0.8	8		8	466	668,085	8	4.0	101	3.2	32	133	0 + 9291.465
0 + 9311.465	20.000	24.0	380	342	29.6	332	365	707	0.0	8		8	699	668,784	8	3.5	75	1.4	46	121	0 + 9311.465
0 + 9321.385	9.920	26.4	250	225	45.2	371	408	633	0.0	0		0	633	669,417	0	4.0	37	1.6	15	52	0 + 9321.385
0 + 9326.825	5.440	30.0	153	138	54.4	271	298	436	0.0	0		0	436	669,853	0	4.0	22	1.6	9	30	0 + 9326.825
0 + 9381.465	54.640	0.0	820	738	0.0	1,486	1,635	2,372	61.4	1,677		1,677	695	670,548	1,677	0.0	109	8.2	268	377	0 + 9381.465
0 + 9403.905	22.440	6.8	76	69	0.0	0	0	69	1.2	702		702	-634	669,915	69	2.0	22	2.4	119	141	0 + 9403.905
0 + 9441.465	37.560	0.0	128	115	0.0	0	0	115	29.2	571		571	-456	669,459	115	1.2	60	10.8	248	308	0 + 9441.465
0 + 9491.465	50.000	0.0	0	0	0.0	0	0	0	51.6	2,020		2,020	-2,020	667,439	0	5.6	170	11.6	560	730	0 + 9491.465
0 + 9526.755	35.290	0.0	0	0	0.0	0	0	0	30.8	1,454		1,454	-1,454	665,985	0	6.0	205	4.4	282	487	0 + 9526.755
0 + 9571.465	44.710	0.0	0	0	0.0	0	0	0	54.8	1,914		1,914	-1,914	664,071	0	10.6	371	6.2	237	608	0 + 9571.465
0 + 9602.625	31.160	0.0	0	0	0.0	0	0	0	160.0	3,347		3,347	-3,347	660,724	0	37.0	742	6.8	203	944	0 + 9602.625
0 + 9638.045	35.420	0.0	0	0	0.0	0	0	0	417.6	10,229		10,229	-10,229	650,495	0	20.6	1,020	21.6	503	1,523	0 + 9638.045
0 + 9642.975	4.930	0.0	0	0	0.0	0	0	0	373.5	1,950		1,950	-1,950	648,545	0	16.4	91	26.2	118	209	0 + 9642.975
0 + 9681.645	38.670	0.0	0	0	0.0	0	0	0	167.2	10,454		10,454	-10,454	638,091	0	9.3	497	18.8	870	1,367	0 + 9681.645
0 + 9691.465	9.820	0.0	0	0	0.0	0	0	0	189.2	1,750		1,750	-1,750	636,341	0	0.0	46	17.8	180	225	0 + 9691.465
0 + 9711.465	20.000	0.0	0	0	0.0	0	0	0	50.8	2,400		2,400	-2,400	633,941	0	0.0	0	11.6	294	294	0 + 9711.465
0 + 9731.465	20.000	0.0	0	0	0.0	0	0	0	98.8	1,496		1,496	-1,496	632,445	0	0.0	0	16.4	280	280	0 + 9731.465
0 + 9755.925	24.460	0.0	0	0	0.0	0	0	0	167.0	3,251		3,251	-3,251	629,194	0	0.0	0	25.9	517	517	0 + 9755.925
0 + 9771.465	15.540	0.0	0	0	0.0	0	0	0	104.2	2,107		2,107	-2,107	627,087	0	0.0	0	24.1	389	389	0 + 9771.465
0 + 9791.465	20.000	0.0	0	0	0.0	0	0	0	66.6	1,708		1,708	-1,708	625,379	0	0.0	0	12.9	370	370	0 + 9791.465
0 + 9811.465	20.000	0.0	0	0	0.0	0	0	0	68.8	1,354		1,354	-1,354	624,025	0	0.0	0	15.7	286	286	0 + 9811.465
0 + 9829.855	18.390	0.0	0	0	0.0	0	0	0	179.6	2,284		2,284	-2,284	621,741	0	0.0	0	29.4	415	415	0 + 9829.855
0 + 9841.465	11.610	0.0	0	0	0.0	0	0	0	215.2	2,292		2,292	-2,292	619,449	0	0.0	0	29.4	341	341	0 + 9841.465
0 + 9892.595	51.130	11.2	286	258	0.0	0	0	258	0.4	5,512		5,512	-5,254	614,195	258	3.0	77	1.4	787	864	0 + 9892.595
0 + 9911.465	18.870	28.4	374	336	8.8	83	91	428	0.0	4		4	424	614,619	4	4.7	73	2.0	32	105	0 + 9911.465
0 + 9931.465	20.000	2.8	312	281	0.0	88	97	378	0.0	0		0	378	614,996	0	0.6	53	0.0	20	73	0 + 9931.465
0 + 9938.465	7.000	0.0	10	9	0.0	0	0	9	68.0	238		238	-229	614,767	9	0.0	2	6.5	23	25	0 + 9938.465
0 + 9943.065	4.600	0.0	0	0	0.0	0	0	0	18.8	200		200	-200	614,567	0	0.0	0	6.6	30	30	0 + 9943.065
0 + 9949.055	5.990	7.2	22	19	0.0	0	0	19	0.8	59		59	-39	614,528	19	2.4	7	2.5	27	34	0 + 9949.055
0 + 9981.045	31.990	19.6	429	386	4.0	64	70	456	0.0	13		13	443	614,971	13	4.5	110	1.2	59	170	0 + 9981.045
0 + 10042.535	61.490	0.0	603	542	0.0	123	135	678	43.2	1,328		1,328	-651	614,321	678	19.0	723	1.2	74	796	0 + 10042.535
0 + 10061.485	18.950	0.0	0	0	0.0	0	0	0	122.0	1,565		1,565	-1,565	612,756	0	16.2	334	2.6	36	370	0 + 10061.485
0 + 10083.495	22.010	0.0	0	0	0.0	0	0	0	216.6	3,726		3,726	-3,726	609,029	0	10.3	292	2.8	59	351	0 + 10083.495
0 + 10120.595	37.100	21.2	393	354	5.6	104	114	468	0.0	4,018		4,018	-3,550	605,480	468	4.5	275	0.0	52	326	0 + 10120.595
0 + 10143.985	23.390	0.2	250	225	0.0	65	72	297	23.8	278		278	19	605,499	278	0.3	56	17.0	199	255	0 + 10143.985
0 + 10151.465	7.480	0.0	1	1	0.0	0	0	1	58.6	308		308	-308	605,191	1	0.0	1	15.4	121	122	0 + 10151.465
0 + 10171.465	20.000	1.5	15	14	0.0	0	0	14	20.8	794		794	-781	604,411	14	1.7	17	8.0	234	251	0 + 10171.465
0 + 10191.465	20.000	1.0	25	23	0.0	0	0	23	24.8	456		456	-434	603,977	23	1.2	29	8.4	164	193	0 + 10191.465
0 + 10211.465	20.000	10.8	118	106	4.8	48	53	159	9.6	344		344	-185	603,792	159	6.0	72	7.0	154	226	0 + 10211.465
0 + 10231.465	20.000	23.0	338	304	30.4	352	387	691	0.0	96		96	595	604,387	96	6.7	127	1.1	81	208	0 + 10231.465
0 + 10251.465	20.000	42.0	650	585	107.2	1,376	1,514	2,099	0.0	0		0	2,099	606,486	0	8.2	149	1.4	25	174	0 + 10251.465
Sub Total	1,501.465		20,303	18,273		21,880	24,068	42,341		76,360		76,360	-34,020		5,850		7,522		11,146	18,668	Sub Total
Total	10,251.465		311,903	280,713		514,925	566,417	847,130		237,410		237,410	609,720		57,371		66,127		60,391	126,518	Total

6-347

Station	Distance	Cut Volume							Embankment Volume				Balance	Accumulated	Lateral	Slope Protection					Station
		Common (C=0.90)			Weathered Rock (C=1.10)			Total	Embankment Section			Total				Left Side		Right Side		Total	
	(m)	Sectional Area (m2)	Groud Volume (m3)	Corrected Volume (m3)	Sectional Area (m2)	Ground Volume (m3)	Corrected Volume (m3)	Corrected Cut Volume A (m3)	Sectional Area (m2)	Volume (m3)	Vary Volume (m3)	Embankment Volume B (m3)	A - B (m3)	Volume (m3)	Volume (m3)	Slope Length (m)	Area (m2)	Slope Length (m)	Area (m2)	Area (m2)	
0 + 10251.465		42.0			107.2				0.0					606,486		8.2		1.4			0 + 10251.465
0 + 10271.465	20.000	64.0	1,060	954	207.2	3,144	3,458	4,412	0.0	0		0	4,412	610,898	0	4.5	127	2.3	37	164	0 + 10271.465
0 + 10291.465	20.000	56.8	1,208	1,087	166.0	3,732	4,105	5,192	0.0	0		0	5,192	616,091	0	6.6	111	2.8	51	162	0 + 10291.465
0 + 10309.845	18.380	44.4	930	837	74.6	2,211	2,432	3,269	0.0	0		0	3,269	619,360	0	4.8	105	2.3	47	152	0 + 10309.845
0 + 10341.975	32.130	34.4	1,266	1,139	84.0	2,548	2,803	3,942	0.0	0		0	3,942	623,302	0	5.7	169	1.0	53	222	0 + 10341.975
0 + 10351.505	9.530	38.8	349	314	66.8	719	790	1,104	0.0	0		0	1,104	624,406	0	5.0	51	1.0	10	61	0 + 10351.505
0 + 10371.505	20.000	17.2	560	504	15.5	823	905	1,409	20.4	204		204	1,205	625,612	204	6.5	115	16.1	171	286	0 + 10371.505
0 + 10396.195	24.690	21.8	481	433	26.9	523	576	1,009	0.0	252		252	757	626,369	252	5.0	142	0.0	199	341	0 + 10396.195
0 + 10411.505	15.310	16.0	289	260	28.8	426	469	729	0.0	0		0	729	627,098	0	2.0	54	0.0	0	54	0 + 10411.505
0 + 10461.505	50.000	25.2	1,030	927	78.4	2,680	2,948	3,875	0.0	0		0	3,875	630,973	0	7.9	248	1.5	38	285	0 + 10461.505
0 + 10505.505	44.000	40.4	1,443	1,299	123.0	4,431	4,874	6,173	0.0	0		0	6,173	637,146	0	5.5	295	1.9	75	370	0 + 10505.505
0 + 10517.085	11.580	50.6	527	474	187.6	1,798	1,978	2,452	0.0	0		0	2,452	639,599	0	5.0	61	3.1	29	90	0 + 10517.085
0 + 10531.505	14.420	50.8	731	658	152.8	2,454	2,700	3,358	0.0	0		0	3,358	642,956	0	7.0	87	3.2	45	132	0 + 10531.505
0 + 10551.505	20.000	49.8	1,006	905	89.2	2,420	2,662	3,567	0.0	0		0	3,567	646,524	0	4.1	111	3.9	71	182	0 + 10551.505
0 + 10568.285	16.780	32.4	690	621	24.8	956	1,052	1,673	0.0	0		0	1,673	648,197	0	3.5	64	2.9	57	121	0 + 10568.285
0 + 10586.285	18.000	0.0	292	262	0.0	223	246	508	0.0	0		0	508	648,704	0	0.0	32	0.0	26	58	0 + 10586.285
0 + 10593.805	7.520	0.0	0	0	0.0	0	0	0	0.0	0		0	0	648,704	0	0.0	0	0.0	0	0	0 + 10593.805
0 + 10612.285	18.480	32.4	299	269	34.8	322	354	623	0.0	0		0	623	649,328	0	3.2	30	3.9	36	66	0 + 10612.285
0 + 10632.285	20.000	50.0	824	742	72.0	1,068	1,175	1,916	0.0	0		0	1,916	651,244	0	3.2	64	7.4	113	177	0 + 10632.285
0 + 10650.825	18.540	55.0	973	876	110.8	1,695	1,864	2,740	0.0	0		0	2,740	653,984	0	3.0	57	5.1	116	173	0 + 10650.825
0 + 10673.235	22.410	55.4	1,237	1,113	114.8	2,528	2,783	3,894	0.0	0		0	3,894	657,878	0	2.9	66	5.0	113	179	0 + 10673.235
0 + 10683.695	10.460	47.8	540	486	78.2	1,009	1,110	1,596	0.0	0		0	1,596	659,474	0	2.8	30	4.5	50	79	0 + 10683.695
0 + 10692.285	8.590	44.4	396	356	55.2	573	630	987	0.0	0		0	987	660,461	0	2.5	23	6.9	49	72	0 + 10692.285
0 + 10712.285	20.000	35.4	798	718	26.4	816	898	1,616	0.0	0		0	1,616	662,077	0	3.1	56	4.3	112	168	0 + 10712.285
0 + 10724.965	12.680	49.2	536	483	27.8	344	378	861	0.0	0		0	861	662,937	0	3.0	39	10.7	95	134	0 + 10724.965
0 + 10729.955	4.990	18.4	169	152	2.0	74	82	234	2.0	5		5	229	663,166	5	2.0	12	7.2	45	57	0 + 10729.955
0 + 10736.965	7.010	13.2	111	100	0.0	7	8	107	0.0	7		7	100	663,266	7	2.0	14	2.6	34	48	0 + 10736.965
0 + 10740.955	3.990	27.6	81	73	0.0	0	0	73	0.0	0		0	73	663,339	0	2.5	9	3.0	11	20	0 + 10740.955
0 + 10753.205	12.250	15.2	262	236	1.8	11	12	248	0.0	0		0	248	663,588	0	1.9	21	5.0	49	70	0 + 10753.205
0 + 10768.965	15.760	17.9	261	235	11.2	102	113	347	0.0	0		0	347	663,935	0	1.4	19	4.0	71	90	0 + 10768.965
0 + 10792.285	23.320	22.0	465	419	20.0	364	400	819	0.0	0		0	819	664,754	0	1.8	37	4.7	101	139	0 + 10792.285
0 + 10812.285	20.000	0.0	220	198	0.0	200	220	418	19.6	196		196	222	664,976	196	5.8	76	0.0	47	123	0 + 10812.285
0 + 10825.555	13.270	0.0	0	0	0.0	0	0	0	165.6	1,229		1,229	-1,229	663,747	0	15.4	141	0.0	0	141	0 + 10825.555
0 + 10836.555	11.000	0.0	0	0	0.0	0	0	0	18.6	1,013		1,013	-1,013	662,734	0	4.8	111	0.0	0	111	0 + 10836.555
0 + 10852.285	15.730	21.2	167	150	20.4	160	176	327	0.0	146		146	180	662,914	146	1.6	50	4.5	35	86	0 + 10852.285
0 + 10872.285	20.000	32.6	538	484	57.8	782	860	1,344	0.0	0		0	1,344	664,259	0	1.5	31	4.6	91	122	0 + 10872.285
0 + 10892.285	20.000	1.6	342	308	0.0	578	636	944	36.4	364		364	580	664,838	364	18.4	199	1.0	56	255	0 + 10892.285
0 + 10912.285	20.000	0.0	16	14	0.0	0	0	14	42.4	788		788	-774	664,065	14	18.6	370	0.0	10	380	0 + 10912.285
0 + 10925.995	13.710	0.0	0	0	0.0	0	0	0	44.6	596		596	-596	663,468	0	17.4	247	0.0	0	247	0 + 10925.995
0 + 10930.815	4.820	0.0	0	0	0.0	0	0	0	26.8	172		172	-172	663,296	0	13.1	74	0.0	0	74	0 + 10930.815
0 + 10952.285	21.470	0.0	0	0	0.0	0	0	0	24.8	554		554	-554	662,742	0	12.0	269	0.0	0	269	0 + 10952.285
0 + 10972.285	20.000	1.6	16	14	0.0	0	0	14	6.8	316		316	-302	662,441	14	4.4	164	1.2	12	176	0 + 10972.285
0 + 10992.285	20.000	9.6	112	101	1.2	12	13	114	0.0	68		68	46	662,487	68	0.0	44	3.6	48	92	0 + 10992.285
0 + 11008.535	16.250	20.0	241	216	10.4	94	104	320	0.0	0		0	320	662,807	0	0.0	0	5.0	70	70	0 + 11008.535
0 + 11012.285	3.730	16.0	68	61	12.8	44	48	109	0.0	0		0	109	662,915	0	0.0	0	4.5	18	18	0 + 11012.285
0 + 0.000	0.000	0.0	0	0	0.0	0	0	0	0.0	0		0	0	662,915	0	0.0	0	0.0	0	0	0 + 0.000
0 + 0.000	0.000	0.0	0	0	0.0	0	0	0	0.0	0		0	0	662,915	0	0.0	0	0.0	0	0	0 + 0.000
0 + 0.000	0.000	0.0	0	0	0.0	0	0	0	0.0	0		0	0	662,915	0	0.0	0	0.0	0	0	0 + 0.000
0 + 0.000	0.000	0.0	0	0	0.0	0	0	0	0.0	0		0	0	662,915	0	0.0	0	0.0	0	0	0 + 0.000
0 + 0.000	0.000	0.0	0	0	0.0	0	0	0	0.0	0		0	0	662,915	0	0.0	0	0.0	0	0	0 + 0.000
0 + 0.000	0.000	0.0	0	0	0.0	0	0	0	0.0	0		0	0	662,915	0	0.0	0	0.0	0	0	0 + 0.000
0 + 0.000	0.000	0.0	0	0	0.0	0	0	0	0.0	0		0	0	662,915	0	0.0	0	0.0	0	0	0 + 0.000
0 + 0.000	0.000	0.0	0	0	0.0	0	0	0	0.0	0		0	0	662,915	0	0.0	0	0.0	0	0	0 + 0.000
0 + 0.000	0.000	0.0	0	0	0.0	0	0	0	0.0	0		0	0	662,915	0	0.0	0	0.0	0	0	0 + 0.000
0 + 0.000	0.000	0.0	0	0	0.0	0	0	0	0.0	0		0	0	662,915	0	0.0	0	0.0	0	0	0 + 0.000
0 + 0.000	0.000	0.0	0	0	0.0	0	0	0	0.0	0		0	0	662,915	0	0.0	0	0.0	0	0	0 + 0.000
0 + 0.000	0.000	0.0	0	0	0.0	0	0	0	0.0	0		0	0	662,915	0	0.0	0	0.0	0	0	0 + 0.000
0 + 0.000	0.000	0.0	0	0	0.0	0	0	0	0.0	0		0	0	662,915	0	0.0	0	0.0	0	0	0 + 0.000
0 + 0.000	0.000	0.0	0	0	0.0	0	0	0	0.0	0		0	0	662,915	0	0.0	0	0.0	0	0	0 + 0.000
0 + 0.000	0.000	0.0	0	0	0.0	0	0	0	0.0	0		0	0	662,915	0	0.0	0	0.0	0	0	0 + 0.000
Sub Total	760.820		20,534	18,480		39,872	43,859	62,340		5,910		5,910	56,429		1,271		4,022		2,290	6,313	Sub Total
Total	11,012.285		332,437	299,193		554,797	610,277	909,470		243,321		243,321	666,149		58,642		70,149		62,682	132,831	Total

6-348

Quantity Calculation

Access Road Name : Conguillo Access Road (Membrillo~Conguillo)

Station	Distance (m)	Earthwork														Slope Protection					Station
		Cut Volume							Embankment Volume							Left Side		Right Side			
		Common (C=0.90)			Weathered Rock (C=1.10)			Total	Embankment Section			Total	Balance	Accumulated	Lateral					Total	
		Sectional Area (m2)	Ground Volume (m3)	Corrected Volume (m3)	Sectional Area (m2)	Ground Volume (m3)	Corrected Volume (m3)	Corrected Cut Volume A (m3)	Sectional Area (m2)	Volume (m3)	Vary Volume (m3)	Embankment Volume B (m3)	A - B (m3)	Volume (m3)	Volume (m3)	Slope Length (m)	Area (m2)	Slope Length (m)	Area (m2)	Area (m2)	
0 + 0.000		28.0			8.0				0.0					0		6.5		0.0			0 + 0.000
0 + 20.000	20.000	22.4	504	454	8.4	164	180	634	0.0	0		0	634	634	0	7.2	137	0.0	0	137	0 + 20.000
0 + 34.000	14.000	1.6	168	151	0.0	59	65	216	43.6	305		305	-89	545	216	1.6	62	13.4	94	155	0 + 34.000
0 + 50.000	16.000	20.0	173	156	11.6	99	102	258	0.0	349		349	-91	453	258	4.3	47	0.0	107	154	0 + 50.000
0 + 94.000	44.000	42.8	1,382	1,243	80.4	2,024	2,226	3,470	0.0	0		0	3,470	3,923	0	5.2	209	1.0	22	231	0 + 94.000
0 + 134.540	40.540	17.6	1,224	1,102	7.6	1,784	1,962	3,064	8.8	178		178	2,886	6,809	178	10.0	308	16.8	361	669	0 + 134.540
0 + 155.660	21.120	12.8	321	289	2.4	106	116	405	31.6	427		427	-22	6,787	405	5.0	158	26.4	456	615	0 + 155.660
0 + 159.670	4.010	13.2	52	47	14.4	34	37	84	0.0	63		63	21	6,808	63	5.2	20	16.2	85	106	0 + 159.670
0 + 180.000	20.330	22.8	366	329	31.6	468	514	844	0.0	0		0	844	7,652	0	7.0	124	0.0	165	289	0 + 180.000
0 + 200.000	20.000	34.0	568	511	31.6	632	695	1,206	0.0	0		0	1,206	8,858	0	6.8	138	2.0	20	158	0 + 200.000
0 + 220.000	20.000	27.6	616	554	10.4	420	462	1,016	0.0	0		0	1,016	9,875	0	4.4	112	1.2	32	144	0 + 220.000
0 + 240.000	20.000	34.8	624	562	66.4	768	845	1,406	0.0	0		0	1,406	11,281	0	3.8	82	2.2	34	116	0 + 240.000
0 + 260.000	20.000	40.0	748	673	109.6	1,760	1,936	2,609	0.0	0		0	2,609	13,890	0	3.4	72	2.2	44	116	0 + 260.000
0 + 280.000	20.000	41.2	812	731	99.2	2,088	2,297	3,028	0.0	0		0	3,028	16,918	0	3.6	70	2.0	42	112	0 + 280.000
0 + 300.000	20.000	26.8	680	612	70.8	1,700	1,870	2,482	0.0	0		0	2,482	19,400	0	3.4	70	2.4	44	114	0 + 300.000
0 + 320.000	20.000	40.0	668	601	61.2	1,320	1,452	2,053	0.0	0		0	2,053	21,453	0	4.2	76	2.0	44	120	0 + 320.000
0 + 340.000	20.000	30.0	700	630	35.6	968	1,065	1,695	0.0	0		0	1,695	23,148	0	4.6	88	2.0	40	128	0 + 340.000
0 + 360.000	20.000	0.0	300	270	0.0	356	392	662	111.2	1,112		1,112	-450	22,697	662	0.0	46	17.8	198	244	0 + 360.000
0 + 369.000	9.000	0.0	0	0	0.0	0	0	0	188.4	1,348		1,348	-1,348	21,349	0	0.0	0	35.0	238	238	0 + 369.000
0 + 380.000	11.000	0.0	0	0	0.0	0	0	0	87.6	1,518		1,518	-1,518	19,831	0	0.0	0	22.4	316	316	0 + 380.000
0 + 393.600	13.600	0.0	0	0	0.0	0	0	0	21.2	740		740	-740	19,091	0	0.0	0	6.0	193	193	0 + 393.600
0 + 400.000	6.400	0.0	0	0	0.0	0	0	0	9.6	99		99	-99	18,993	0	0.0	0	4.0	32	32	0 + 400.000
0 + 420.000	20.000	0.0	0	0	0.0	0	0	0	74.4	840		840	-840	18,153	0	0.0	0	30.4	344	344	0 + 420.000
0 + 440.000	20.000	0.0	0	0	0.0	0	0	0	225.2	2,996		2,996	-2,996	15,157	0	17.4	174	19.4	498	672	0 + 440.000
0 + 457.790	17.790	1.1	10	9	0.0	0	0	9	21.6	2,195		2,195	-2,186	12,970	9	0.6	160	18.4	336	496	0 + 457.790
0 + 496.840	39.050	36.4	732	659	22.8	445	490	1,149	0.0	422		422	727	13,697	422	8.2	172	1.5	389	560	0 + 496.840
0 + 525.400	28.560	47.2	1,194	1,074	101.6	1,776	1,954	3,029	0.0	0		0	3,029	16,726	0	3.5	167	2.0	50	217	0 + 525.400
0 + 569.120	43.720	29.2	1,670	1,503	20.0	2,656	2,924	4,427	0.0	0		0	4,427	21,153	0	3.6	155	2.2	92	247	0 + 569.120
0 + 594.370	25.250	0.0	369	332	0.0	253	278	610	160.3	2,024		2,024	-1,414	19,738	610	0.0	45	28.6	389	434	0 + 594.370
0 + 613.630	18.260	0.0	0	0	0.0	0	0	0	50.0	1,920		1,920	-1,920	17,818	0	0.0	0	0.0	261	261	0 + 613.630
0 + 620.000	6.370	0.8	3	2	0.0	0	0	2	55.9	337		337	-335	17,483	2	0.0	0	0.8	3	3	0 + 620.000
0 + 640.000	20.000	18.4	192	173	0.0	0	0	173	0.0	559		559	-386	17,097	173	0.0	0	0.0	8	8	0 + 640.000
0 + 660.000	20.000	17.2	356	320	2.4	24	26	347	0.0	0		0	347	17,444	0	3.0	30	0.0	0	30	0 + 660.000
0 + 668.350	8.350	21.2	160	144	6.8	38	42	187	0.0	0		0	187	17,631	0	4.6	32	0.0	0	32	0 + 668.350
0 + 680.000	11.650	21.2	247	222	7.2	82	90	312	0.0	0		0	312	17,943	0	3.6	48	0.0	0	48	0 + 680.000
0 + 700.000	20.000	13.2	344	310	0.8	80	88	398	51.6	516		516	-118	17,824	398	6.5	101	15.8	158	259	0 + 700.000
0 + 720.000	20.000	28.0	412	371	26.0	268	295	666	0.0	516		516	150	17,974	516	6.0	125	0.0	158	283	0 + 720.000
0 + 744.320	24.320	24.8	642	578	32.6	713	784	1,362	0.0	0		0	1,362	19,335	0	2.2	100	0.0	0	100	0 + 744.320
0 + 748.320	4.000	25.2	100	90	44.0	153	169	259	0.0	0		0	259	19,594	0	2.8	10	0.0	0	10	0 + 748.320
0 + 760.000	11.680	35.1	352	317	53.3	568	625	942	0.0	0		0	942	20,536	0	3.5	37	2.3	13	50	0 + 760.000
0 + 770.000	10.000	29.7	324	292	46.6	500	549	841	0.0	0		0	841	21,377	0	3.8	37	2.0	22	58	0 + 770.000
0 + 790.000	20.000	24.4	541	487	16.4	630	693	1,180	0.0	0		0	1,180	22,557	0	3.6	74	2.2	42	116	0 + 790.000
0 + 804.200	14.200	10.8	250	225	0.0	116	128	353	0.0	0		0	353	22,910	0	3.0	47	0.0	16	62	0 + 804.200
0 + 805.270	1.070	9.2	11	10	0.0	0	0	10	0.2	0		0	10	22,919	0	2.6	3	1.2	1	4	0 + 805.270
0 + 820.000	14.730	0.0	68	61	0.0	0	0	61	89.9	664		664	-603	22,317	61	0.0	19	14.2	113	133	0 + 820.000
0 + 830.000	10.000	0.0	0	0	0.0	0	0	0	199.6	1,448		1,448	-1,448	20,869	0	0.0	0	8.4	113	113	0 + 830.000
0 + 840.000	10.000	0.0	0	0	0.0	0	0	0	63.2	1,314		1,314	-1,314	19,555	0	5.2	26	0.0	42	68	0 + 840.000
0 + 860.000	20.000	16.2	162	146	0.0	0	0	146	0.0	632		632	-486	19,069	146	0.0	52	3.0	30	82	0 + 860.000
0 + 880.000	20.000	21.6	378	340	10.2	102	112	452	3.6	36		36	416	19,486	36	0.0	0	3.0	60	60	0 + 880.000
0 + 894.970	14.970	18.5	300	270	4.0	106	117	387	0.0	27		27	360	19,846	27	2.6	19	3.5	49	68	0 + 894.970
0 + 897.610	2.640	24.4	57	51	12.4	22	24	75	0.0	0		0	75	19,920	0	3.2	8	3.4	9	17	0 + 897.610
0 + 940.000	42.390	26.6	1,081	973	39.4	1,098	1,208	2,181	0.0	0		0	2,181	22,101	0	2.6	123	2.0	114	237	0 + 940.000
0 + 960.000	20.000	24.8	514	463	35.0	744	818	1,281	0.0	0		0	1,281	23,382	0	3.7	63	1.0	30	93	0 + 960.000
0 + 978.580	18.580	11.6	338	304	7.2	392	431	736	3.8	35		35	700	24,082	35	4.6	77	0.4	13	90	0 + 978.580
1 + 17.150	38.570	12.4	463	417	7.2	278	305	722	1.6	104		104	618	24,700	104	10.0	282	0.3	13	295	1 + 17.150
1 + 35.520	18.370	28.6	377	339	51.2	536	590	929	0.0	15		15	914	25,614	15	5.2	140	0.0	3	142	1 + 35.520
1 + 64.420	28.900	13.4	607	546	22.4	1,064	1,170	1,716	0.0	0		0	1,716	27,331	0	4.0	133	0.0	0	133	1 + 64.420
Total	1063.420		22,158	19,942		27,388	30,127	50,069		22,738		22,738	27,331		4,335		4,277		5,935	10,212	

Station	Distance	Earthwork														Slope Protection					Station
		Cut Volume							Embankment Volume				Balance	Accumulated	Lateral	Left Side		Right Side		Total	
		Common (C=0.90)			Weathered Rock (C=1.10)			Total	Embankment Section			Total	A - B	Volume	Volume					Area	
	(m)	Sectional Area (m2)	Ground Volume (m3)	Corrected Volume (m3)	Sectional Area (m2)	Ground Volume (m3)	Corrected Volume (m3)	Corrected Cut Volume A (m3)	Sectional Area (m2)	Volume (m3)	Vary Volume (m3)	Embankment Volume B (m3)	(m3)	(m3)	(m3)	Slope Length (m)	Area (m2)	Slope Length (m)	Area (m2)	(m2)	
1 + 64.420		13.4			22.4				0.0					27,331		4.0		0.0			1 + 64.420
1 + 80.000	15.580	22.8	282	254	24.2	363	399	653	0.0	0		0	653	27,984	0	9.6	106	0.0	0	106	1 + 80.000
1 + 100.000	20.000	22.4	452	407	42.1	663	729	1,136	0.0	0		0	1,136	29,120	0	8.0	176	0.0	0	176	1 + 100.000
1 + 120.000	20.000	24.4	468	421	43.8	859	945	1,366	0.0	0		0	1,366	30,486	0	5.7	137	0.0	0	137	1 + 120.000
1 + 140.000	20.000	31.4	558	502	59.2	1,030	1,133	1,635	0.0	0		0	1,635	32,121	0	9.5	152	0.0	0	152	1 + 140.000
1 + 146.340	6.340	27.2	186	167	64.2	391	430	597	0.0	0		0	597	32,718	0	9.0	59	0.0	0	59	1 + 146.340
1 + 149.630	3.290	32.4	98	88	59.0	203	223	311	0.0	0		0	311	33,030	0	16.7	42	0.0	0	42	1 + 149.630
1 + 160.000	10.370	34.4	346	312	62.2	628	691	1,003	0.0	0		0	1,003	34,033	0	19.5	188	0.0	0	188	1 + 160.000
1 + 187.000	27.000	42.3	1,035	932	168.8	3,119	3,430	4,362	0.0	0		0	4,362	38,395	0	2.5	297	0.0	0	297	1 + 187.000
1 + 190.000	3.000	48.4	136	122	247.2	624	686	809	0.0	0		0	809	39,204	0	2.6	8	0.0	0	8	1 + 190.000
1 + 200.000	10.000	39.2	438	394	170.3	2,088	2,296	2,690	0.0	0		0	2,690	41,894	0	4.6	36	1.0	5	41	1 + 200.000
1 + 220.000	20.000	59.1	983	885	242.6	4,129	4,542	5,427	0.0	0		0	5,427	47,321	0	7.4	120	2.0	30	150	1 + 220.000
1 + 230.000	10.000	55.6	574	516	155.2	1,989	2,188	2,704	0.0	0		0	2,704	50,025	0	6.2	68	2.6	23	91	1 + 230.000
1 + 238.500	8.500	11.5	285	257	0.0	660	726	982	0.0	0		0	982	51,007	0	0.0	26	0.0	11	37	1 + 238.500
1 + 260.000	21.500	44.2	599	539	84.0	908	993	1,532	0.0	0		0	1,532	52,539	0	2.4	26	4.8	52	77	1 + 260.000
1 + 273.600	13.600	30.8	510	459	31.6	786	865	1,324	0.0	0		0	1,324	53,863	0	2.5	33	4.2	61	95	1 + 273.600
1 + 287.080	13.480	0.0	208	187	0.0	213	234	421	96.5	650		650	-229	53,634	421	31.8	231	0.0	28	259	1 + 287.080
1 + 306.560	19.480	6.4	62	56	0.0	0	0	56	13.1	1,068		1,068	-1,011	52,622	56	7.0	378	2.8	27	405	1 + 306.560
1 + 320.000	13.440	24.3	206	186	4.0	27	30	215	0.0	88		88	127	52,749	88	0.0	47	4.5	49	96	1 + 320.000
1 + 340.000	20.000	24.4	487	438	30.4	344	378	817	0.0	0		0	817	53,566	0	5.5	55	0.0	45	100	1 + 340.000
1 + 360.190	20.190	17.2	420	378	22.0	529	582	960	0.0	0		0	960	54,526	0	4.6	102	0.0	0	102	1 + 360.190
1 + 374.490	14.300	21.4	276	248	3.1	179	197	446	0.0	0		0	446	54,972	0	7.3	85	0.0	0	85	1 + 374.490
1 + 400.000	25.510	17.4	495	445	1.9	64	70	516	0.0	0		0	516	55,487	0	3.2	134	0.0	0	134	1 + 400.000
1 + 440.000	40.000	8.0	508	457	0.0	38	42	499	0.0	0		0	499	55,986	0	2.3	110	0.0	0	110	1 + 440.000
1 + 464.060	24.060	18.0	313	282	0.0	0	0	282	0.0	0		0	282	56,268	0	2.3	55	1.0	12	67	1 + 464.060
1 + 480.070	16.010	0.0	144	130	0.0	0	0	130	111.6	893		893	-764	55,504	130	6.0	66	19.8	167	233	1 + 480.070
1 + 495.630	15.560	0.0	0	0	0.0	0	0	0	101.0	1,654		1,654	-1,654	53,850	0	0.0	47	16.6	283	330	1 + 495.630
1 + 499.740	4.110	0.0	0	0	0.0	0	0	0	48.5	307		307	-307	53,543	0	0.0	0	12.6	60	60	1 + 499.740
1 + 513.000	13.260	0.0	0	0	0.0	0	0	0	184.0	1,541		1,541	-1,541	52,001	0	0.0	0	16.4	192	192	1 + 513.000
1 + 520.000	7.000	0.0	0	0	0.0	0	0	0	93.6	972		972	-972	51,030	0	13.6	48	16.4	115	162	1 + 520.000
1 + 540.000	20.000	0.0	0	0	0.0	0	0	0	56.8	1,504		1,504	-1,504	49,526	0	3.5	171	10.8	272	443	1 + 540.000
1 + 563.450	23.450	6.7	79	71	0.0	0	0	71	0.0	666		666	-595	48,931	71	2.2	67	0.0	127	193	1 + 563.450
1 + 587.250	23.800	23.6	361	325	11.7	139	153	478	0.0	0		0	478	49,408	0	3.6	69	2.4	29	98	1 + 587.250
1 + 617.110	29.860	0.0	352	317	0.0	175	192	509	54.8	818		818	-309	49,099	509	0.0	54	13.2	233	287	1 + 617.110
1 + 634.500	17.390	4.0	35	31	0.0	0	0	31	0.0	476		476	-445	48,654	31	1.0	9	0.0	115	123	1 + 634.500
1 + 664.450	29.950	0.3	64	58	0.0	0	0	58	4.0	60		60	-2	48,652	58	0.0	15	5.2	78	93	1 + 664.450
1 + 713.270	48.820	0.0	7	7	0.0	0	0	7	23.8	679		679	-672	47,980	7	4.5	110	3.4	210	320	1 + 713.270
1 + 756.100	42.830	0.0	0	0	0.0	0	0	0	339.4	7,778		7,778	-7,778	40,202	0	0.0	96	26.0	630	726	1 + 756.100
1 + 792.280	36.180	0.0	0	0	0.0	0	0	0	300.4	11,574		11,574	-11,574	28,628	0	0.0	0	39.6	1,187	1,187	1 + 792.280
1 + 810.000	17.720	9.2	82	73	5.6	50	55	128	104.0	3,583		3,583	-3,455	25,173	128	5.0	44	28.4	602	647	1 + 810.000
1 + 820.000	10.000	22.0	156	140	43.5	246	270	410	0.0	520		520	-110	25,064	410	4.8	49	0.0	142	191	1 + 820.000
1 + 835.000	15.000	44.8	501	451	111.6	1,163	1,280	1,730	0.0	0		0	1,730	26,794	0	6.0	81	2.0	15	96	1 + 835.000
1 + 840.000	5.000	37.6	206	185	114.0	564	620	806	0.0	0		0	806	27,600	0	4.0	25	1.4	9	34	1 + 840.000
1 + 860.000	20.000	28.1	657	591	89.6	2,036	2,240	2,831	0.0	0		0	2,831	30,431	0	4.6	86	1.0	24	110	1 + 860.000
1 + 870.020	10.020	22.0	251	226	80.4	852	937	1,163	0.0	0		0	1,163	31,594	0	4.5	46	1.0	10	56	1 + 870.020
1 + 893.090	23.070	26.4	558	502	82.6	1,880	2,068	2,571	0.0	0		0	2,571	34,164	0	6.0	121	1.0	23	144	1 + 893.090
1 + 942.820	49.730	22.0	1,203	1,083	35.6	2,939	3,233	4,316	0.0	0		0	4,316	38,480	0	3.4	234	1.0	50	283	1 + 942.820
1 + 959.300	16.480	18.4	333	300	3.2	320	352	651	0.0	0		0	651	39,132	0	4.9	68	0.0	8	77	1 + 959.300
1 + 980.000	20.700	10.4	298	268	4.0	75	82	350	1.4	14		14	336	39,467	14	8.0	134	0.2	2	136	1 + 980.000
1 + 992.000	12.000	0.0	62	56	0.0	24	26	83	112.0	680		680	-598	38,870	83	0.0	48	26.4	160	208	1 + 992.000
2 + 0.000	8.000	6.2	25	22	4.8	19	21	43	41.6	614		614	-571	38,299	43	4.8	19	34.8	245	264	2 + 0.000
2 + 13.420	13.420	14.4	138	124	20.4	169	186	310	0.0	279		279	31	38,330	279	3.8	58	0.0	234	291	2 + 13.420
2 + 75.820	62.400	32.8	1,473	1,325	44.4	2,022	2,224	3,549	0.0	0		0	3,549	41,879	0	4.2	250	2.0	62	312	2 + 75.820
2 + 104.940	29.120	13.6	676	608	0.0	646	711	1,319	1.2	17		17	1,302	43,181	17	13.0	250	0.5	36	287	2 + 104.940
2 + 134.380	29.440	8.4	324	291	4.4	65	71	363	3.2	65		65	298	43,479	65	5.4	271	0.2	10	281	2 + 134.380
2 + 158.180	23.800	0.0	100	90	0.0	52	58	148	533.6	6,388		6,388	-6,240	37,238	148	0.0	64	47.4	566	631	2 + 158.180
2 + 170.000	11.820	0.0	0	0	0.0	0	0	0	64.0	3,532		3,532	-3,532	33,707	0	0.0	0	27.0	440	440	2 + 170.000
2 + 180.000	10.000	3.2	16	14	0.0	0	0	14	9.6	368		368	-354	33,353	14	3.2	16	7.5	173	189	2 + 180.000
2 + 200.000	20.000	23.2	264	238	8.8	88	97	334	0.0	96		96	238	33,591	96	9.0	122	0.0	75	197	2 + 200.000
2 + 214.810	14.810	14.0	275	248	18.0	198	218	466	0.0	0		0	466	34,058	0	6.0	111	0.0	0	111	2 + 214.810
Sub Total	1,150.390		18,565	16,709		33,550	36,905	33,613		46,886		46,886	6,727		2,669		5,519		4,925	12,444	Sub Total
Total	2,213.810		40,723	36,651		60,958	67,031	103,682		69,624		69,624	34,058		7,004		9,796		12,860	22,656	Total

6-360

Station	Distance (m)	Earthwork														Slope Protection					Station
		Cut Volume							Embankment Volume				Balance A - B (m3)	Accumulated Volume (m3)	Lateral Volume (m3)	Left Side		Right Side		Total Area (m2)	
		Common (C=0.90)			Weathered Rock (C=1.10)			Total	Embankment Section			Total									
		Sectional Area (m2)	Ground Volume (m3)	Corrected Volume (m3)	Sectional Area (m2)	Ground Volume (m3)	Corrected Volume (m3)	Corrected Cut Volume A (m3)	Sectional Area (m2)	Volume (m3)	Vary Volume (m3)	Embankment Volume B (m3)				Slope Length (m)	Area (m2)	Slope Length (m)	Area (m2)		
2 + 214.810		14.0			18.0				0.0					34,058		6.0		0.0			2 + 214.810
2 + 226.490	11.680	13.6	161	145	12.8	180	198	343	0.0	0		0	343	34,401	0	5.0	64	0.0	0	64	2 + 226.490
2 + 240.000	13.510	28.8	286	258	70.8	565	621	879	0.0	0		0	879	35,280	0	10.0	101	1.1	7	109	2 + 240.000
2 + 260.000	20.000	29.2	580	522	154.8	2,256	2,482	3,004	0.0	0		0	3,004	38,283	0	3.3	133	1.1	22	155	2 + 260.000
2 + 280.000	20.000	50.6	798	718	208.8	3,636	4,000	4,718	0.0	0		0	4,718	43,001	0	3.0	63	1.6	27	90	2 + 280.000
2 + 290.200	10.200	47.2	499	449	224.8	2,211	2,432	2,881	0.0	0		0	2,881	45,882	0	9.0	61	1.1	14	75	2 + 290.200
2 + 300.360	10.160	32.8	406	366	151.2	1,910	2,101	2,467	0.0	0		0	2,467	48,349	0	6.0	76	1.0	11	87	2 + 300.360
2 + 310.000	9.640	22.2	265	239	74.8	1,089	1,198	1,437	0.0	0		0	1,437	49,786	0	4.4	50	1.0	10	60	2 + 310.000
2 + 320.000	10.000	10.8	165	149	5.4	401	441	590	65.2	326		326	264	50,050	326	4.8	46	26.7	139	185	2 + 320.000
2 + 330.000	10.000	21.4	161	145	46.8	261	287	432	0.0	326		326	106	50,156	326	3.5	42	1.0	139	180	2 + 330.000
2 + 340.000	10.000	26.0	237	213	115.2	810	891	1,104	0.0	0		0	1,104	51,260	0	4.0	38	1.1	11	48	2 + 340.000
2 + 353.670	13.670	34.2	411	370	135.6	1,714	1,886	2,256	0.0	0		0	2,256	53,516	0	3.5	51	1.1	15	66	2 + 353.670
2 + 359.070	5.400	34.6	186	167	122.6	697	767	934	0.0	0		0	934	54,450	0	3.0	18	1.1	6	23	2 + 359.070
2 + 418.750	20.740	25.4	622	560	46.0	1,748	1,923	2,483	0.0	0		0	2,483	56,933	0	9.0	124	1.2	24	148	2 + 418.750
2 + 440.000	21.250	3.4	306	275	0.0	489	538	813	29.8	317		317	496	57,430	317	5.1	150	8.4	102	252	2 + 440.000
2 + 460.000	20.000	5.3	87	78	0.0	0	0	78	21.6	514		514	-436	56,994	78	4.2	93	8.4	168	261	2 + 460.000
2 + 480.000	20.000	23.6	289	260	31.6	316	348	608	0.0	216		216	392	57,386	216	9.0	132	0.0	84	216	2 + 480.000
2 + 500.000	20.000	19.8	434	391	25.2	568	625	1,015	0.0	0		0	1,015	58,401	0	8.4	174	0.0	0	174	2 + 500.000
2 + 508.240	8.240	21.6	171	154	39.9	268	295	449	0.0	0		0	449	58,849	0	3.7	50	0.0	0	50	2 + 508.240
2 + 521.930	13.690	25.4	322	290	52.2	630	693	983	0.0	0		0	983	59,832	0	5.5	63	1.0	7	70	2 + 521.930
2 + 539.160	17.230	0.0	219	197	0.0	450	495	692	57.7	497		497	195	60,027	497	0.0	47	8.4	81	128	2 + 539.160
2 + 557.510	18.350	26.4	242	218	34.6	317	349	567	0.0	529		529	38	60,065	529	5.0	46	2.0	95	141	2 + 557.510
2 + 570.000	12.490	22.8	307	277	47.6	513	565	841	0.0	0		0	841	60,906	0	4.0	56	0.0	12	69	2 + 570.000
2 + 580.000	10.000	17.6	202	182	13.6	306	337	518	0.4	2		2	516	61,422	2	9.0	65	0.0	0	65	2 + 580.000
2 + 600.000	20.000	18.2	358	322	2.4	160	176	498	33.8	342		342	156	61,579	342	3.0	120	3.0	30	150	2 + 600.000
2 + 610.790	10.790	18.2	196	177	24.8	147	161	338	0.0	182		182	156	61,734	182	4.8	42	0.0	16	58	2 + 610.790
2 + 617.010	6.220	16.4	108	97	18.4	134	148	245	0.0	0		0	245	61,979	0	4.6	29	0.0	0	29	2 + 617.010
2 + 635.000	17.990	0.0	148	133	0.0	166	182	315	58.2	524		524	-209	61,770	315	0.0	41	10.8	97	139	2 + 635.000
2 + 640.000	5.000	16.6	42	37	1.0	3	3	40	0.0	146		146	-105	61,665	40	4.6	12	0.0	27	39	2 + 640.000
2 + 660.000	20.000	1.6	182	164	0.0	10	11	175	24.6	246		246	-71	61,594	175	3.0	76	13.6	136	212	2 + 660.000
2 + 680.000	20.000	28.3	299	269	25.0	250	275	544	0.0	246		246	298	61,892	246	5.7	87	2.0	156	243	2 + 680.000
2 + 698.150	18.150	19.4	433	390	53.2	710	781	1,170	0.0	0		0	1,170	63,062	0	4.5	93	1.0	27	120	2 + 698.150
2 + 734.110	35.960	48.4	1,219	1,097	62.0	2,071	2,278	3,376	0.0	0		0	3,376	66,438	0	14.7	345	2.3	59	405	2 + 734.110
2 + 759.020	24.910	45.6	1,171	1,054	248.8	3,871	4,258	5,312	0.0	0		0	5,312	71,749	0	1.0	196	1.6	49	244	2 + 759.020
2 + 780.000	20.980	33.4	829	746	291.6	5,669	6,236	6,982	0.0	0		0	6,982	78,731	0	1.2	23	3.1	49	72	2 + 780.000
2 + 800.000	20.000	40.6	740	666	270.8	5,624	6,186	6,852	0.0	0		0	6,852	85,583	0	1.1	23	4.1	72	95	2 + 800.000
2 + 820.000	20.000	37.6	782	704	131.2	4,020	4,422	5,126	0.0	0		0	5,126	90,709	0	1.2	23	6.5	106	129	2 + 820.000
2 + 830.000	10.000	35.8	367	330	240.2	1,857	2,043	2,373	0.0	0		0	2,373	93,082	0	1.8	15	3.8	52	67	2 + 830.000
2 + 841.700	11.700	8.8	261	235	30.4	1,583	1,741	1,976	0.0	0		0	1,976	95,058	0	1.0	16	6.2	59	75	2 + 841.700
2 + 843.890	2.190	13.3	24	22	13.2	48	53	74	0.0	0		0	74	95,133	0	0.0	1	6.8	14	15	2 + 843.890
2 + 860.000	16.110	0.0	107	96	0.0	106	117	213	12.0	97		97	117	95,249	97	5.7	46	0.0	55	101	2 + 860.000
2 + 880.000	20.000	17.3	173	156	26.0	260	286	442	0.0	120		120	322	95,571	120	0.0	57	5.6	56	113	2 + 880.000
2 + 895.000	15.000	33.6	382	344	145.8	1,289	1,417	1,761	0.0	0		0	1,761	97,332	0	1.0	8	3.3	67	74	2 + 895.000
2 + 905.000	10.000	41.6	376	338	137.6	1,417	1,559	1,897	0.0	0		0	1,897	99,229	0	1.1	11	5.0	42	52	2 + 905.000
2 + 917.700	12.700	26.4	432	389	33.2	1,083	1,193	1,582	0.0	0		0	1,582	100,811	0	2.8	25	2.8	50	74	2 + 917.700
2 + 930.000	12.300	0.0	162	146	0.0	204	225	371	89.1	548		548	-177	100,633	371	12.6	95	0.0	17	112	2 + 930.000
2 + 940.000	10.000	0.0	0	0	0.0	0	0	0	248.9	1,690		1,690	-1,690	98,943	0	31.7	222	0.0	0	222	2 + 940.000
2 + 954.480	14.480	0.0	0	0	0.0	0	0	0	272.8	3,777		3,777	-3,777	95,166	0	58.6	654	0.0	0	654	2 + 954.480
2 + 957.020	2.540	0.0	0	0	0.0	0	0	0	199.0	599		599	-599	94,567	0	41.4	127	0.0	0	127	2 + 957.020
2 + 980.000	22.980	1.6	18	17	0.0	0	0	17	61.2	2,990		2,990	-2,973	91,594	17	18.8	692	1.6	18	710	2 + 980.000
3 + 0.000	20.000	21.2	228	205	5.4	54	59	265	0.0	612		612	-347	91,247	265	0.0	188	4.8	64	252	3 + 0.000
3 + 20.000	20.000	25.0	462	416	15.8	212	233	649	0.0	0		0	649	91,896	0	3.5	35	4.3	91	126	3 + 20.000
3 + 28.130	8.130	25.6	206	185	20.8	149	164	349	0.0	0		0	349	92,244	0	2.5	24	3.1	30	54	3 + 28.130
3 + 67.840	39.710	23.0	965	868	11.2	685	699	1,567	0.0	0		0	1,567	93,812	0	1.4	77	7.2	205	282	3 + 67.840
3 + 117.530	49.690	0.0	571	514	0.0	278	306	820	70.8	1,759		1,759	-939	92,873	820	15.9	430	0.0	179	609	3 + 117.530
3 + 140.000	22.470	0.0	0	0	0.0	0	0	0	83.8	1,737		1,737	-1,737	91,136	0	17.7	377	0.0	0	377	3 + 140.000
3 + 160.000	20.000	0.0	0	0	0.0	0	0	0	103.6	1,874		1,874	-1,874	89,262	0	15.7	334	0.0	0	334	3 + 160.000
3 + 180.000	20.000	0.0	0	0	0.0	0	0	0	130.0	2,336		2,336	-2,336	86,926	0	16.4	321	0.0	0	321	3 + 180.000
3 + 188.390	8.390	0.0	0	0	0.0	0	0	0	118.2	1,041		1,041	-1,041	85,885	0	16.0	136	0.0	0	136	3 + 188.390
3 + 237.880	49.490	2.0	49	45	0.0	0	0	45	27.1	3,595		3,595	-3,551	82,334	45	11.3	676	3.6	89	765	3 + 237.880
Sub Total	984.130		18,646	16,782		35,348	38,682	75,464		27,188		27,188	48,276		5,325		7,418		2,883	10,302	Sub Total
Total	3,197,940		59,370	53,433		114,285	125,714	179,146		96,812		96,812	82,334		12,329		17,215		15,743	32,958	Total

6-361

Station	Distance	Earthwork														Slope Protection					Station
		Cut Volume							Embankment Volume				Balance	Accumulated	Lateral	Left Side		Right Side		Total	
		Common (C=0.90)			Weathered Rock (C=1.10)			Total	Embankment Section			Total									
	(m)	Sectional Area (m2)	Ground Volume (m3)	Corrected Volume (m3)	Sectional Area (m2)	Ground Volume (m3)	Corrected Volume (m3)	Corrected Cut Volume A (m3)	Sectional Area (m2)	Volume (m3)	Vary Volume (m3)	Embankment Volume B (m3)	A - B (m3)	Volume (m3)	Volume (m3)	Slope Length (m)	Area (m2)	Slope Length (m)	Area (m2)	Area (m2)	
3 + 237.880		2.0			0.0				27.1					82,334		11.3		3.6			3 + 237.880
3 + 260.000	22.120	31.6	372	334	63.8	706	776	1,111	0.0	300		300	811	83,145	300	2.5	153	1.0	51	204	3 + 260.000
3 + 280.000	20.000	40.1	717	645	96.4	1,602	1,762	2,408	0.0	0		0	2,408	85,552	0	2.8	53	2.0	30	83	3 + 280.000
3 + 300.000	20.000	0.0	401	361	0.0	964	1,060	1,421	102.1	1,021		1,021	400	85,953	1,021	30.0	328	0.0	20	348	3 + 300.000
3 + 311.410	11.410	0.0	0	0	0.0	0	0	0	232.4	1,908		1,908	-1,908	84,044	0	30.4	345	0.0	0	345	3 + 311.410
3 + 320.000	8.590	0.0	0	0	0.0	0	0	0	261.4	2,121		2,121	-2,121	81,924	0	36.4	287	0.0	0	287	3 + 320.000
3 + 340.000	20.000	0.0	0	0	0.0	0	0	0	230.0	4,914		4,914	-4,914	77,010	0	38.6	750	0.0	0	750	3 + 340.000
3 + 360.000	20.000	0.0	0	0	0.0	0	0	0	105.2	3,352		3,352	-3,352	73,658	0	18.6	572	0.0	0	572	3 + 360.000
3 + 380.000	20.000	0.0	0	0	0.0	0	0	0	42.2	1,474		1,474	-1,474	72,184	0	13.4	320	0.0	0	320	3 + 380.000
3 + 391.080	11.080	15.4	85	77	0.6	3	4	80	1.4	242		242	-161	72,022	80	3.5	94	4.0	22	116	3 + 391.080
3 + 440.000	48.920	8.0	572	515	0.0	15	16	531	1.8	78		78	453	72,475	78	0.0	86	5.0	220	306	3 + 440.000
3 + 451.350	11.350	12.6	117	105	0.9	5	6	111	0.0	10		10	101	72,576	10	2.5	14	0.0	28	43	3 + 451.350
3 + 480.000	28.650	23.2	513	462	47.8	698	767	1,229	0.0	0		0	1,229	73,805	0	1.0	50	3.5	50	100	3 + 480.000
3 + 500.000	20.000	25.4	486	437	129.8	1,776	1,954	2391	0.0	0		0	2,391	76,196	0	1.1	21	3.6	71	92	3 + 500.000
3 + 526.630	26.630	35.2	807	726	71.2	2,676	2,944	3,670	0.0	0		0	3,670	79,866	0	4.1	69	3.3	92	161	3 + 526.630
3 + 540.000	13.370	34.4	465	419	61.8	889	978	1,397	0.0	0		0	1,397	81,263	0	3.7	52	2.4	38	90	3 + 540.000
3 + 596.030	56.030	29.8	1,799	1,619	48.8	3,098	3,408	5,027	0.0	0		0	5,027	86,290	0	4.0	216	2.2	129	345	3 + 596.030
3 + 634.970	38.940	26.8	1,102	992	15.1	1,244	1,369	2,360	0.0	0		0	2,360	88,650	0	5.2	179	0.0	43	222	3 + 634.970
3 + 655.000	20.030	12.4	399	353	0.4	155	171	524	22.0	220		220	304	88,954	220	7.0	122	8.3	83	205	3 + 655.000
3 + 680.000	25.000	31.6	550	495	85.9	1,079	1,187	1,682	0.0	275		275	1,407	90,361	275	4.2	140	2.2	131	271	3 + 680.000
3 + 700.000	20.000	39.2	908	817	202.4	2,883	3,171	3,989	0.0	0		0	3,989	94,349	0	4.1	83	2.3	45	128	3 + 700.000
3 + 720.000	20.000	55.6	1,148	1,033	460.4	6,628	7,291	8,324	0.0	0		0	8,324	102,673	0	3.0	71	2.1	44	115	3 + 720.000
3 + 730.000	10.000	39.6	476	428	549.6	5,050	5,555	5,983	0.0	0		0	5,983	108,657	0	2.7	29	2.0	21	49	3 + 730.000
3 + 740.000	10.000	82.6	611	550	454.2	5,019	5,521	6,071	0.0	0		0	6,071	114,727	0	3.0	29	2.5	23	51	3 + 740.000
3 + 760.000	20.000	48.8	1,314	1,183	113.2	5,674	6,241	7,424	0.0	0		0	7,424	122,151	0	7.0	100	2.3	48	148	3 + 760.000
3 + 780.000	20.000	25.6	744	670	9.2	1,224	1,346	2,016	0.0	0		0	2,016	124,167	0	6.4	134	0.0	23	157	3 + 780.000
3 + 790.000	10.000	8.8	172	155	5.9	76	83	238	18.8	94		94	144	124,311	94	6.3	64	15.9	80	143	3 + 790.000
3 + 800.000	10.000	18.8	138	124	5.8	59	64	189	81.2	500		500	-311	124,000	189	14.3	103	39.4	277	380	3 + 800.000
3 + 820.000	20.000	15.0	338	304	6.2	120	132	436	32.0	1,132		1,132	-696	123,304	436	6.5	208	35.9	753	961	3 + 820.000
3 + 834.240	14.240	24.4	281	252	15.2	152	168	420	0.0	228		228	192	123,496	228	6.8	95	0.0	256	350	3 + 834.240
3 + 857.000	22.760	10.8	401	361	1.6	191	210	571	40.6	462		462	109	123,605	462	4.5	129	29.9	340	469	3 + 857.000
3 + 896.080	39.080	64.2	1,466	1,319	194.8	3,838	4,221	5,540	0.0	793		793	4,747	128,352	793	4.1	168	2.3	629	797	3 + 896.080
3 + 919.590	23.510	23.2	1,027	925	19.2	2,516	2,767	3,692	0.0	0		0	3,692	132,044	0	4.7	103	2.3	54	158	3 + 919.590
3 + 974.610	55.020	0.0	638	574	0.0	528	581	1,155	46.5	1,279		1,279	-124	131,920	1,155	0.0	129	8.4	294	424	3 + 974.610
4 + 37.220	62.610	22.6	707	637	3.6	113	124	761	0.0	1,456		1,456	-695	131,225	761	0.0	0	3.5	373	373	4 + 37.220
4 + 46.340	9.120	14.0	167	150	0.0	16	18	168	0.0	0		0	168	131,398	0	0.0	0	3.0	30	30	4 + 46.340
4 + 60.000	13.660	0.0	96	86	0.0	0	0	86	0.5	3		3	83	131,476	3	1.2	8	0.0	20	29	4 + 60.000
4 + 80.000	20.000	0.0	0	0	0.0	0	0	0	10.4	109		109	-109	131,367	0	2.0	32	2.7	27	59	4 + 80.000
4 + 100.000	20.000	0.0	0	0	0.0	0	0	0	25.2	356		356	-356	131,011	0	4.0	60	4.7	74	134	4 + 100.000
4 + 106.890	6.890	0.0	0	0	0.0	0	0	0	20.8	158		158	-158	130,853	0	3.5	26	4.3	31	57	4 + 106.890
4 + 151.290	44.400	19.4	431	388	4.6	102	112	500	0.0	462		462	38	130,891	462	1.9	120	2.9	160	280	4 + 151.290
4 + 160.000	8.710	23.4	186	168	9.2	60	66	234	0.0	0		0	234	131,125	0	3.8	25	3.5	28	53	4 + 160.000
4 + 180.000	20.000	23.2	466	419	33.6	428	471	890	0.0	0		0	890	132,015	0	2.7	65	2.5	60	125	4 + 180.000
4 + 220.660	40.660	31.2	1,106	995	65.4	2,013	2,214	3,209	0.0	0		0	3,209	135,224	0	3.0	116	2.0	91	207	4 + 220.660
4 + 240.000	19.340	31.6	607	547	55.4	1,168	1,285	1,831	0.0	0		0	1,831	137,056	0	4.0	68	2.3	42	109	4 + 240.000
4 + 250.000	10.000	24.2	279	251	44.7	501	551	802	0.0	0		0	802	137,857	0	4.0	40	2.0	22	62	4 + 250.000
4 + 260.000	10.000	8.4	163	147	0.0	224	246	393	0.4	2		2	391	138,248	2	4.6	43	2.5	23	66	4 + 260.000
4 + 280.000	20.000	6.9	153	138	0.0	0	0	138	18.3	187		187	-49	138,198	138	5.0	96	24.9	274	370	4 + 280.000
4 + 300.000	20.000	8.0	149	134	0.4	4	4	139	13.2	315		315	-177	138,022	139	5.5	105	15.4	408	508	4 + 300.000
4 + 323.100	23.100	23.2	360	324	25.2	296	325	650	0.0	152		152	497	138,519	152	3.8	107	1.0	189	297	4 + 323.100
4 + 333.820	10.720	23.8	252	227	46.8	386	425	651	0.0	0		0	651	139,170	0	2.8	35	1.0	11	46	4 + 333.820
4 + 375.000	41.180	34.4	1,198	1,079	85.5	2,724	2,996	4,075	0.0	0		0	4,075	143,245	0	2.2	108	2.1	64	167	4 + 375.000
4 + 400.000	25.000	23.1	719	647	6.8	1,154	1,269	1,916	0.0	0		0	1,916	145,161	0	3.6	73	2.3	55	128	4 + 400.000
4 + 420.000	20.000	0.0	231	208	0.0	68	75	283	48.0	480		480	-197	144,964	283	0.0	36	11.9	142	178	4 + 420.000
4 + 440.000	20.000	0.0	0	0	0.0	0	0	0	137.0	1,850		1,850	-1,850	143,114	0	0.0	0	37.5	494	494	4 + 440.000
4 + 446.000	6.000	0.0	0	374	0.0	0	0	374	374.0	1,533		1,533	-1,159	141,955	374	0.0	0	44.4	246	246	4 + 446.000
4 + 482.560	36.560	29.8	545	490	39.8	728	800	1,291	0.0	6,837		6,837	-5,546	136,409	1,291	2.8	51	2.3	854	905	4 + 482.560
4 + 514.700	32.140	52.4	1,321	1,189	203.6	3,911	4,303	5,491	0.0	0		0	5,491	141,900	0	3.2	96	2.0	69	166	4 + 514.700
4 + 538.040	23.340	44.0	1,125	1,012	230.0	5,060	5,566	6,579	0.0	0		0	6,579	148,479	0	2.5	67	1.0	35	102	4 + 538.040
4 + 565.940	27.900	17.1	852	767	2.4	3,242	3,566	4,333	0.0	0		0	4,333	152,812	0	3.5	84	0.9	27	110	4 + 565.940
Sub Total	1,328.060		29,153	26,612		71,064	78,170	104,782		34,304		34,304	70,478		8,946		6,749		7,736	14,485	Sub Total
Total	4,526.000		88,523	80,045		185,349	203,884	283,928		131,116		131,116	152,812		21,275		23,964		23,479	47,442	Total

Station	Distance	Earthwork														Slope Protection					Station
		Cut Volume							Embankment Volume				Balance	Accumulated	Lateral	Left Side		Right Side		Total	
		Common (C=0.90)			Weathered Rock (C=1.10)			Total	Embankment Section			Total									
	(m)	Sectional Area (m2)	Ground Volume (m3)	Corrected Volume (m3)	Sectional Area (m2)	Ground Volume (m3)	Corrected Volume (m3)	Corrected Cut Volume A (m3)	Sectional Area (m2)	Volume (m3)	Vary Volume (m3)	Embankment Volume B (m3)	A - B (m3)	Volume (m3)	Volume (m3)	Slope Length (m)	Area (m2)	Slope Length (m)	Area (m2)	Area (m2)	
4 + 565.940		17.1			2.4				0.0					152,812		3.5		0.9			4 + 565.940
4 + 586.120	20.180	7.2	245	221	0.0	24	27	247	2.4	24		24	223	153,035	24	2.0	55	5.0	60	115	4 + 586.120
4 + 600.000	13.880	3.2	72	65	0.0	0	0	65	0.1	17		17	48	153,083	17	0.5	17	0.5	38	56	4 + 600.000
4 + 620.000	20.000	5.5	87	78	0.0	0	0	78	0.0	1		1	77	153,160	1	0.0	5	1.1	16	21	4 + 620.000
4 + 640.000	20.000	20.0	255	230	0.6	6	7	236	0.0	0		0	236	153,396	0	0.0	0	3.0	41	41	4 + 640.000
4 + 660.000	20.000	0.0	200	180	0.0	6	7	187	73.4	734		734	-547	152,849	187	30.7	307	0.0	30	337	4 + 660.000
4 + 682.420	22.420	1.2	13	12	0.0	0	0	12	62.8	1,527		1,527	-1,515	151,334	12	26.6	642	0.0	0	642	4 + 682.420
4 + 706.900	24.480	21.6	279	251	22.4	274	302	553	0.0	769		769	-216	151,118	553	2.4	355	4.8	59	414	4 + 706.900
4 + 737.180	30.280	40.4	939	845	83.6	1,605	1,765	2,610	0.0	0		0	2,610	153,728	0	2.8	79	3.1	120	198	4 + 737.180
4 + 786.500	49.320	17.6	1,430	1,287	8.0	2,259	2,485	3,772	0.0	0		0	3,772	157,500	0	2.5	131	0.0	76	207	4 + 786.500
4 + 829.080	42.580	0.0	375	337	0.0	170	187	525	40.5	862		862	-338	157,163	525	0.0	53	19.4	413	466	4 + 829.080
4 + 846.150	17.070	0.0	0	0	0.0	0	0	0	59.2	851		851	-851	156,312	0	0.0	0	19.4	331	331	4 + 846.150
4 + 860.000	13.850	1.4	10	9	0.0	0	0	9	1.2	418		418	-410	155,902	9	0.0	0	2.0	148	148	4 + 860.000
4 + 880.000	20.000	11.2	126	113	0.0	0	0	113	0.0	12		12	101	156,004	12	1.3	13	1.0	30	43	4 + 880.000
4 + 900.000	20.000	22.8	340	306	9.2	92	101	407	0.0	0		0	407	156,411	0	2.7	40	2.1	31	71	4 + 900.000
4 + 920.000	20.000	14.9	377	339	78.0	872	959	1,299	0.0	0		0	1,299	157,709	0	2.3	50	0.5	26	76	4 + 920.000
4 + 960.000	40.000	32.8	954	859	48.8	2,536	2,790	3,648	0.0	0		0	3,648	161,358	0	2.2	90	4.5	100	190	4 + 960.000
4 + 980.000	20.000	1.2	340	306	0.0	488	537	843	12.0	120		120	723	162,080	120	6.5	87	1.0	55	142	4 + 980.000
5 + 0.000	20.000	0.0	12	11	0.0	0	0	11	231.2	2,432		2,432	-2,421	159,659	11	30.4	369	0.0	10	379	5 + 0.000
5 + 11.720	11.720	0.0	0	0	0.0	0	0	0	13.3	1,433		1,433	-1,433	158,226	0	6.0	213	0.0	0	213	5 + 11.720
5 + 44.500	32.780	35.0	574	516	76.0	1,246	1,370	1,886	0.0	218		218	1,669	159,895	218	2.4	138	3.3	54	192	5 + 44.500
5 + 71.270	26.770	33.2	913	822	79.8	2,085	2,294	3,115	0.0	0		0	3,115	163,010	0	2.0	59	2.5	78	137	5 + 71.270
5 + 119.920	48.650	0.0	808	727	0.0	1,941	2,135	2,862	2.4	58		58	2,804	165,814	58	0.4	58	0.4	71	129	5 + 119.920
5 + 160.040	40.120	0.0	0	0	0.0	0	0	0	96.5	1,984		1,984	-1,984	163,830	0	14.1	291	25.2	514	804	5 + 160.040
5 + 180.000	19.960	0.0	0	0	0.0	0	0	0	81.6	1,777		1,777	-1,777	162,053	0	5.5	196	24.7	498	694	5 + 180.000
5 + 200.000	20.000	0.0	0	0	0.0	0	0	0	170.3	2,519		2,519	-2,519	159,534	0	4.2	97	41.3	660	757	5 + 200.000
5 + 220.000	20.000	0.0	0	0	0.0	0	0	0	182.5	3,528		3,528	-3,528	156,006	0	1.5	57	45.9	872	929	5 + 220.000
5 + 233.840	13.840	0.0	0	0	0.0	0	0	0	158.4	2,359		2,359	-2,359	153,647	0	0.0	10	42.4	611	621	5 + 233.840
5 + 245.140	11.300	0.0	0	0	0.0	0	0	0	215.0	2,110		2,110	-2,110	151,537	0	0.0	0	41.6	475	475	5 + 245.140
5 + 260.000	14.860	0.0	0	0	0.0	0	0	0	119.8	2,488		2,488	-2,488	149,049	0	0.0	0	41.9	620	620	5 + 260.000
5 + 280.000	20.000	8.0	80	72	0.0	0	0	72	3.0	1,228		1,228	-1,156	147,893	72	3.9	39	3.7	456	495	5 + 280.000
5 + 300.000	20.000	24.8	328	295	14.8	148	163	458	0.0	30		30	428	148,321	30	4.8	87	1.7	54	141	5 + 300.000
5 + 310.800	10.800	27.2	281	253	18.2	178	196	449	0.0	0		0	449	148,770	0	5.0	53	2.2	21	74	5 + 310.800
5 + 332.100	21.300	28.4	592	533	18.4	390	429	962	0.0	0		0	962	149,732	0	6.0	117	2.2	47	164	5 + 332.100
5 + 340.000	7.900	25.8	214	193	12.0	120	132	325	0.0	0		0	325	150,057	0	6.0	47	1.5	15	62	5 + 340.000
5 + 360.000	20.000	19.8	456	410	4.4	164	180	591	0.0	0		0	591	150,647	0	5.9	119	13.4	149	268	5 + 360.000
5 + 380.000	20.000	10.4	302	272	0.0	44	48	320	1.2	12		12	308	150,956	12	5.8	117	2.0	154	271	5 + 380.000
5 + 395.520	15.520	8.8	149	134	0.0	0	0	134	8.0	71		71	63	151,018	71	5.2	85	9.0	85	171	5 + 395.520
5 + 403.000	7.480	8.4	64	58	0.0	0	0	58	1.2	34		34	23	151,042	34	5.4	40	0.5	36	75	5 + 403.000
5 + 421.250	18.250	57.4	600	540	115.0	1,049	1,154	1,695	0.0	11		11	1,684	152,726	11	3.3	79	3.1	33	112	5 + 421.250
5 + 448.430	27.180	72.0	1,759	1,583	350.4	6,325	6,957	8,540	0.0	0		0	8,540	161,266	0	3.4	91	2.0	69	160	5 + 448.430
5 + 466.600	18.170	83.2	1,410	1,269	298.8	5,898	6,488	7,757	0.0	0		0	7,757	169,022	0	7.5	99	2.2	38	137	5 + 466.600
5 + 497.850	31.250	17.1	1,567	1,410	14.0	4,888	5,376	6,787	0.0	0		0	6,787	175,809	0	6.5	219	0.0	34	253	5 + 497.850
5 + 520.000	22.150	26.0	477	430	10.0	266	292	722	13.2	146		146	576	176,385	146	10.8	192	0.0	0	192	5 + 520.000
5 + 540.000	20.000	54.4	804	724	116.8	1,268	1,395	2,118	0.0	132		132	1,986	178,371	132	9.2	200	1.0	10	210	5 + 540.000
5 + 560.000	20.000	59.6	1,140	1,026	179.6	2,964	3,260	4,286	0.0	0		0	4,286	182,658	0	7.5	167	2.0	30	197	5 + 560.000
5 + 571.310	11.310	64.4	701	631	191.2	2,097	2,307	2,938	0.0	0		0	2,938	185,595	0	6.4	79	2.1	23	102	5 + 571.310
5 + 642.400	71.090	67.8	4,699	4,229	253.6	15,810	17,391	21,621	0.0	0		0	21,621	207,216	0	3.6	355	2.0	146	501	5 + 642.400
5 + 682.750	40.350	34.4	2,062	1,856	77.2	6,674	7,341	9,197	0.0	0		0	9,197	216,413	0	2.6	125	2.4	89	214	5 + 682.750
5 + 737.120	54.370	0.0	985	842	0.0	2,099	2,309	3,150	198.2	5,388		5,388	-2,238	214,175	3,150	23.5	710	11.0	364	1,074	5 + 737.120
5 + 788.050	50.930	47.0	1,197	1,077	114.2	2,908	3,199	4,276	0.0	5,047		5,047	-771	213,404	4,276	2.2	654	4.8	402	1,057	5 + 788.050
5 + 799.290	11.240	46.8	527	474	125.2	1,345	1,480	1,954	0.0	0		0	1,954	215,358	0	2.2	25	5.3	57	81	5 + 799.290
5 + 820.000	20.710	48.0	982	883	123.2	2,572	2,829	3,713	0.0	0		0	3,713	219,071	0	2.0	43	5.7	114	157	5 + 820.000
5 + 840.000	20.000	44.4	924	832	113.2	2,364	2,600	3,432	0.0	0		0	3,432	222,503	0	1.0	30	6.5	122	152	5 + 840.000
5 + 860.000	20.000	24.8	692	623	12.8	1,260	1,386	2,009	0.0	0		0	2,009	224,512	0	0.0	10	7.0	135	145	5 + 860.000
5 + 880.000	20.000	16.8	416	374	71.2	840	924	1,298	0.0	0		0	1,298	225,810	0	0.0	0	5.5	125	125	5 + 880.000
5 + 900.000	20.000	31.2	480	432	308.4	3,796	4,176	4,608	0.0	0		0	4,608	230,418	0	1.0	10	3.0	85	95	5 + 900.000
5 + 915.000	15.000	72.4	777	699	382.6	5,183	5,701	6,400	0.0	0		0	6,400	236,818	0	1.0	15	5.7	65	80	5 + 915.000
5 + 924.230	9.230	53.8	582	524	275.4	3,037	3,340	3,865	0.0	0		0	3,865	240,683	0	1.0	9	5.0	49	59	5 + 924.230
5 + 941.520	17.290	33.6	756	680	125.6	3,467	3,813	4,493	0.0	0		0	4,493	245,176	0	1.0	17	9.5	125	143	5 + 941.520
Sub Total	1,375.580		34,302	30,872		90,757	99,833	130,705		38,341		38,341	92,364		9,682		7,247		9,169	16,416	Sub Total
Total	5,901.580		122,825	110,916		276,107	303,717	414,634		169,458		169,458	245,176		30,956		31,211		32,647	63,858	Total

6-363

Station	Distance (m)	Earthwork														Slope Protection					Station
		Cut Volume							Embankment Volume				Balance A - B (m3)	Accumulated Volume (m3)	Lateral Volume (m3)	Left Side		Right Side		Total Area (m2)	
		Common (C=0.90)			Weathered Rock (C=1.10)			Total	Embankment Section			Total									
		Sectional Area (m2)	Ground Volume (m3)	Corrected Volume (m3)	Sectional Area (m2)	Ground Volume (m3)	Corrected Volume (m3)	Corrected Cut Volume A (m3)	Sectional Area (m2)	Volume (m3)	Vary Volume (m3)	Embankment Volume B (m3)				Slope Length (m)	Area (m2)	Slope Length (m)	Area (m2)		
5 + 941.520		33.6			125.6				0.0					245,176		1.0		9.5			5 + 941.520
5 + 986.020	44.500	39.6	1,629	1,466	111.6	5,278	5,805	7,271	0.0	0		0	7,271	252,447	0	1.0	45	16.0	567	612	5 + 986.020
5 + 999.450	13.430	40.0	535	481	183.6	1,982	2,180	2,662	0.0	0		0	2,662	255,109	0	1.0	13	3.0	128	141	5 + 999.450
6 + 20.000	20.550	49.6	921	829	262.8	4,587	5,045	5,874	0.0	0		0	5,874	260,983	0	1.0	21	9.1	124	145	6 + 20.000
6 + 40.000	20.000	38.4	880	792	214.0	4,768	5,245	6,037	0.0	0		0	6,037	267,020	0	1.0	20	2.0	111	131	6 + 40.000
6 + 57.890	17.890	29.8	610	549	168.0	3,417	3,759	4,308	0.0	0		0	4,308	271,327	0	1.0	18	3.6	50	68	6 + 57.890
6 + 105.300	47.410	37.6	1,598	1,438	78.4	5,841	6,425	7,863	0.0	0		0	7,863	279,190	0	1.6	62	6.5	239	301	6 + 105.300
6 + 153.940	48.640	37.2	1,819	1,637	66.8	3,531	3,884	5,522	0.0	0		0	5,522	284,712	0	1.6	78	7.0	328	406	6 + 153.940
6 + 171.550	17.610	23.8	587	483	57.2	1,092	1,201	1,684	0.0	0		0	1,684	286,396	0	1.0	23	7.5	128	151	6 + 171.550
6 + 210.620	39.070	30.8	1,067	960	45.2	2,000	2,200	3,160	0.0	0		0	3,160	289,557	0	1.6	51	9.0	322	373	6 + 210.620
6 + 220.000	9.380	21.6	246	221	56.0	475	522	743	0.0	0		0	743	290,300	0	1.0	12	6.5	73	85	6 + 220.000
6 + 240.000	20.000	36.6	582	524	73.6	1,296	1,426	1,949	0.0	0		0	1,949	292,249	0	1.5	25	9.0	155	180	6 + 240.000
6 + 260.000	20.000	29.6	662	596	98.4	1,720	1,892	2,488	0.0	0		0	2,488	294,737	0	1.1	26	5.7	147	173	6 + 260.000
6 + 281.100	21.100	35.2	684	615	164.0	2,768	3,045	3,660	0.0	0		0	3,660	298,397	0	1.1	23	4.2	104	128	6 + 281.100
6 + 300.000	18.900	46.0	767	691	230.8	3,731	4,104	4,795	0.0	0		0	4,795	303,192	0	1.7	26	1.8	57	83	6 + 300.000
6 + 320.000	20.000	40.4	864	778	130.0	3,608	3,969	4,746	0.0	0		0	4,746	307,938	0	1.6	33	3.1	49	82	6 + 320.000
6 + 337.540	17.540	28.2	602	541	51.6	1,593	1,752	2,293	0.0	0		0	2,293	310,232	0	15.0	146	5.3	74	219	6 + 337.540
6 + 360.000	22.460	8.4	411	370	2.8	611	672	1,042	44.4	499		499	543	310,775	499	24.4	442	7.0	138	581	6 + 360.000
6 + 370.000	10.000	10.4	94	85	0.0	14	15	100	56.0	502		502	-402	310,373	100	32.4	284	10.0	85	369	6 + 370.000
6 + 380.000	10.000	10.8	106	95	0.0	0	0	95	59.2	576		576	-481	309,892	95	32.9	327	9.5	98	424	6 + 380.000
6 + 393.170	13.170	23.6	227	204	5.6	37	41	244	25.6	558		558	-314	309,579	244	33.4	437	17.4	177	614	6 + 393.170
6 + 400.000	6.830	23.2	160	144	18.8	83	92	235	0.0	87		87	148	309,727	87	0.0	114	9.3	91	205	6 + 400.000
6 + 421.600	21.600	35.6	635	572	56.0	808	889	1,460	0.0	0		0	1,460	311,187	0	1.6	17	9.5	208	220	6 + 421.600
6 + 445.500	23.900	34.8	841	757	100.8	1,874	2,061	2,818	0.0	0		0	2,818	314,005	0	1.5	37	3.0	149	186	6 + 445.500
6 + 495.490	49.990	35.6	1,760	1,584	138.8	5,989	6,588	8,171	0.0	0		0	8,171	322,176	0	1.1	65	1.4	110	175	6 + 495.490
6 + 500.000	4.510	39.2	169	152	131.2	609	670	822	0.0	0		0	822	322,998	0	1.5	6	1.5	7	12	6 + 500.000
6 + 520.000	20.000	34.1	733	660	55.2	1,864	2,050	2,710	0.0	0		0	2,710	325,708	0	2.0	35	2.0	35	70	6 + 520.000
6 + 540.000	20.000	20.0	541	487	4.8	600	660	1,147	0.0	0		0	1,147	326,855	0	3.8	58	0.0	20	78	6 + 540.000
6 + 560.000	20.000	0.0	200	180	0.0	48	53	233	62.4	624		624	-391	326,464	233	0.0	38	19.4	194	232	6 + 560.000
6 + 580.000	20.000	4.0	40	36	0.0	0	0	36	19.2	816		816	-780	325,684	36	4.1	41	8.4	278	319	6 + 580.000
6 + 598.120	18.120	10.4	130	117	4.4	40	44	161	7.6	243		243	-82	325,602	161	4.7	80	8.4	152	232	6 + 598.120
6 + 637.420	39.300	35.3	898	808	75.8	1,576	1,734	2,542	0.0	149		149	2,392	327,995	149	1.6	124	2.7	218	342	6 + 637.420
6 + 690.890	53.470	0.0	944	849	0.0	2,027	2,229	3,079	73.4	1,962		1,962	1,116	329,111	1,962	8.4	267	0.0	72	340	6 + 690.890
6 + 722.550	31.660	0.0	0	0	0.0	0	0	0	29.2	1,624		1,624	-1,624	327,487	0	0.0	133	6.0	95	228	6 + 722.550
6 + 747.070	24.520	26.4	324	291	6.0	74	81	372	0.0	358		358	14	327,501	358	4.0	49	2.0	98	147	6 + 747.070
6 + 774.500	27.430	23.6	686	617	1.6	104	115	732	0.0	0		0	732	328,233	0	4.6	118	2.0	55	173	6 + 774.500
6 + 805.030	30.530	11.2	531	478	0.0	24	27	505	0.0	0		0	505	328,738	0	2.7	111	0.7	41	153	6 + 805.030
6 + 845.840	40.810	0.0	229	206	0.0	0	0	206	107.8	2,200		2,200	-1,994	326,744	206	12.4	308	11.4	247	555	6 + 845.840
6 + 857.500	11.660	0.0	0	0	0.0	0	0	0	162.8	1,578		1,578	-1,578	325,166	0	13.8	153	12.6	140	293	6 + 857.500
6 + 880.000	22.500	0.0	0	0	0.0	0	0	0	105.8	3,022		3,022	-3,022	322,144	0	28.4	475	0.0	142	617	6 + 880.000
6 + 900.000	20.000	0.0	0	0	0.0	0	0	0	234.8	3,406		3,406	-3,406	318,738	0	28.4	568	0.0	0	568	6 + 900.000
6 + 913.720	13.720	0.0	0	0	0.0	0	0	0	208.6	3,042		3,042	-3,042	315,697	0	28.1	388	0.0	0	388	6 + 913.720
6 + 937.000	23.280	0.0	0	0	0.0	0	0	0	236.4	5,180		5,180	-5,180	310,517	0	26.4	634	0.0	0	634	6 + 937.000
6 + 991.540	54.540	0.0	0	0	0.0	0	0	0	363.4	16,357		16,357	-16,357	294,160	0	24.3	1,383	0.0	0	1,383	6 + 991.540
7 + 31.200	39.660	0.0	0	0	0.0	0	0	0	160.4	10,387		10,387	-10,387	283,773	0	23.7	952	11.3	224	1,176	7 + 31.200
7 + 74.380	43.180	0.0	0	0	0.0	0	0	0	258.4	9,042		9,042	-9,042	274,731	0	18.8	918	19.3	661	1,578	7 + 74.380
7 + 127.070	52.690	0.0	0	0	0.0	0	0	0	379.0	16,792		16,792	-16,792	257,939	0	35.6	1,433	16.0	930	2,363	7 + 127.070
7 + 153.900	26.830	0.0	0	0	0.0	0	0	0	123.6	6,742		6,742	-6,742	251,197	0	15.4	684	11.2	365	1,049	7 + 153.900
7 + 184.330	30.430	0.0	0	0	0.0	0	0	0	57.0	2,748		2,748	-2,748	248,449	0	8.5	364	0.0	170	534	7 + 184.330
7 + 215.360	31.080	0.0	0	0	0.0	0	0	0	17.6	1,157		1,157	-1,157	247,291	0	4.0	194	0.0	0	194	7 + 215.360
7 + 247.360	32.000	2.0	32	29	0.0	0	0	29	0.0	282		282	-253	247,039	29	0.0	64	0.8	13	77	7 + 247.360
7 + 274.850	27.490	0.0	27	25	0.0	0	0	25	99.0	1,361		1,361	-1,336	245,703	25	12.4	170	0.0	11	181	7 + 274.850
7 + 295.000	20.150	0.0	0	0	0.0	0	0	0	34.8	1,348		1,348	-1,348	244,355	0	4.8	173	7.2	73	246	7 + 295.000
7 + 320.000	25.000	0.0	0	0	0.0	0	0	0	78.4	1,415		1,415	-1,415	242,940	0	19.4	303	0.0	90	393	7 + 320.000
7 + 340.000	20.000	14.4	144	130	0.0	0	0	130	0.0	784		784	-654	242,285	130	1.7	211	1.0	10	221	7 + 340.000
7 + 360.000	20.000	12.4	268	241	0.0	0	0	241	0.0	0		0	241	242,526	0	1.5	32	1.6	26	58	7 + 360.000
7 + 380.000	20.000	0.4	128	115	0.0	0	0	115	0.0	0		0	115	242,642	0	0.0	15	0.0	16	31	7 + 380.000
7 + 400.120	20.120	0.8	12	11	0.0	0	0	11	0.0	0		0	11	242,652	0	0.0	0	0.0	0	0	7 + 400.120
7 + 444.330	44.210	0.0	18	16	0.0	0	0	16	5.6	124		124	-108	242,545	16	1.0	22	0.0	0	22	7 + 444.330
7 + 485.580	41.250	0.0	0	0	0.0	0	0	0	33.6	809		809	-809	241,736	0	2.5	72	0.0	0	72	7 + 485.590
Sub Total	1,544.060		24,287	21,859		64,067	70,474	92,333		93,773		93,773	-3,440		4,330		12,919		8,090	21,009	Sub Total
Total	7,445.640		147,112	132,775		340,174	374,191	506,967		265,230		265,230	241,736		35,287		44,130		40,738	84,867	Total

6-364

Station	Distance (m)	Earthwork														Slope Protection					Station
		Cut Volume							Embankment Volume				Balance	Accumulated	Lateral	Left Side		Right Side		Total	
		Common (C=0.90)			Weathered Rock (C=1.10)			Total	Embankment Section			Total	A - B	Volume	Volume					Area	
		Sectional Area (m2)	Ground Volume (m3)	Corrected Volume (m3)	Sectional Area (m2)	Ground Volume (m3)	Corrected Volume (m3)	Corrected Cut Volume A (m3)	Sectional Area (m2)	Volume (m3)	Vary Volume (m3)	Embankment Volume B (m3)	(m3)	(m3)	(m3)	Slope Length (m)	Area (m2)	Slope Length (m)	Area (m2)	(m2)	
7 + 485.580		0.0			0.0				33.6					241,736		2.5		0.0			7 + 485.580
7 + 534.850	49.270	0.0	0	0	0.0	0	0	0	129.4	4,016		4,016	-4,016	237,721	0	5.6	200	0.0	0	200	7 + 534.850
7 + 569.020	34.170	0.0	0	0	0.0	0	0	0	94.8	3,830		3,830	-3,830	233,890	0	6.0	198	0.0	0	198	7 + 569.020
7 + 579.320	10.300	0.0	0	0	0.0	0	0	0	114.8	1,079		1,079	-1,079	232,811	0	7.7	71	0.0	0	71	7 + 579.320
7 + 600.000	20.680	0.0	0	0	0.0	0	0	0	32.4	1,522		1,522	-1,522	231,289	0	4.3	124	0.0	0	124	7 + 600.000
7 + 610.000	10.000	0.0	0	0	0.0	0	0	0	16.8	246		246	-246	231,043	0	3.5	39	0.0	0	39	7 + 610.000
7 + 620.000	10.000	0.0	0	0	0.0	0	0	0	31.2	240		240	-240	230,803	0	7.7	56	0.0	0	56	7 + 620.000
7 + 640.000	20.000	0.0	0	0	0.0	0	0	0	70.0	1,012		1,012	-1,012	229,791	0	19.4	271	0.0	0	271	7 + 640.000
7 + 660.000	20.000	0.0	0	0	0.0	0	0	0	97.8	1,678		1,678	-1,678	228,113	0	30.2	496	0.0	0	496	7 + 660.000
7 + 680.000	20.000	4.8	48	43	0.0	0	0	43	49.2	1,470		1,470	-1,427	226,686	43	29.4	596	3.6	36	632	7 + 680.000
7 + 687.930	7.930	4.2	36	32	0.0	0	0	32	24.8	293		293	-261	226,425	32	19.4	193	3.0	26	220	7 + 687.930
7 + 734.390	46.460	0.0	98	88	0.0	0	0	88	12.8	873		873	-786	225,639	88	5.5	578	0.0	70	648	7 + 734.390
7 + 781.190	46.800	12.2	285	257	0.0	0	0	257	0.0	300		300	-43	225,596	257	0.0	129	3.0	70	199	7 + 781.190
7 + 786.650	5.460	10.0	61	55	0.0	0	0	55	0.0	0		0	55	225,651	0	0.0	0	2.2	14	14	7 + 786.650
7 + 800.000	13.350	2.0	80	72	0.0	0	0	72	0.6	4		4	68	225,719	4	0.8	5	1.0	21	27	7 + 800.000
7 + 820.000	20.000	0.0	20	18	0.0	0	0	18	12.7	133		133	-115	225,604	18	0.0	8	4.6	56	64	7 + 820.000
7 + 860.000	40.000	0.0	0	0	0.0	0	0	0	16.0	574		574	-574	225,030	0	0.0	0	5.5	202	202	7 + 860.000
7 + 878.530	18.530	7.2	67	60	0.0	0	0	60	3.6	182		182	-122	224,908	60	4.4	41	3.6	84	125	7 + 878.530
7 + 889.000	10.470	14.4	113	102	1.2	6	7	109	0.1	19		19	89	224,998	19	5.3	51	0.6	22	73	7 + 889.000
7 + 900.000	11.000	20.4	191	172	6.4	42	46	218	0.0	1		1	218	225,215	1	4.5	54	0.0	3	57	7 + 900.000
7 + 920.000	20.000	26.8	472	425	10.8	172	189	614	0.0	0		0	614	225,829	0	2.5	70	2.3	23	93	7 + 920.000
7 + 930.000	10.000	28.8	278	250	12.0	114	125	376	0.0	0		0	376	226,205	0	3.5	30	3.0	27	57	7 + 930.000
7 + 940.000	10.000	24.4	266	239	8.4	102	112	352	0.0	0		0	352	226,557	0	1.6	26	3.3	32	57	7 + 940.000
7 + 960.000	20.000	25.2	496	446	1.0	94	103	550	0.0	0		0	550	227,106	0	1.7	33	3.9	72	105	7 + 960.000
7 + 980.000	20.000	22.8	480	432	1.6	26	29	461	0.0	0		0	461	227,567	0	0.0	17	3.9	78	95	7 + 980.000
8 + 7.820	27.820	0.0	317	285	0.0	22	24	310	104.0	1,447		1,447	-1,137	226,430	310	24.1	335	7.5	159	494	8 + 7.820
8 + 31.720	23.900	0.0	0	0	0.0	0	0	0	218.2	3,850		3,850	-3,850	222,580	0	30.9	657	15.9	280	937	8 + 31.720
8 + 40.000	8.280	0.0	0	0	0.0	0	0	0	249.0	1,934		1,934	-1,934	220,646	0	28.2	245	16.9	136	380	8 + 40.000
8 + 60.000	20.000	0.0	0	0	0.0	0	0	0	339.6	5,886		5,886	-5,886	214,760	0	30.4	586	17.4	343	929	8 + 60.000
8 + 80.000	20.000	0.0	0	0	0.0	0	0	0	323.0	6,626		6,626	-6,626	208,134	0	28.9	593	18.8	362	955	8 + 80.000
8 + 90.000	10.000	0.0	0	0	0.0	0	0	0	316.8	3,199		3,199	-3,199	204,935	0	30.4	297	17.9	184	480	8 + 90.000
8 + 100.000	10.000	0.0	0	0	0.0	0	0	0	291.2	3,040		3,040	-3,040	201,895	0	30.4	304	15.4	167	471	8 + 100.000
8 + 120.000	20.000	0.0	0	0	0.0	0	0	0	228.8	5,200		5,200	-5,200	196,695	0	24.7	551	14.8	302	853	8 + 120.000
8 + 140.000	20.000	0.0	0	0	0.0	0	0	0	161.2	3,900		3,900	-3,900	192,795	0	16.4	411	13.3	281	692	8 + 140.000
8 + 160.000	20.000	0.0	0	0	0.0	0	0	0	255.0	4,162		4,162	-4,162	188,633	0	22.5	389	14.6	279	668	8 + 160.000
8 + 180.000	20.000	0.0	0	0	0.0	0	0	0	88.8	3,438		3,438	-3,438	185,195	0	13.2	357	8.9	235	592	8 + 180.000
8 + 200.000	20.000	0.0	0	0	0.0	0	0	0	36.4	1,252		1,252	-1,252	183,943	0	6.0	192	5.0	139	331	8 + 200.000
8 + 210.000	10.000	0.0	0	0	0.0	0	0	0	20.4	284		284	-284	183,659	0	3.8	49	3.8	44	93	8 + 210.000
8 + 220.000	10.000	0.0	0	0	0.0	0	0	0	25.6	230		230	-230	183,429	0	1.5	27	0.0	19	46	8 + 220.000
8 + 240.000	20.000	0.0	0	0	0.0	0	0	0	15.2	408		408	-408	183,021	0	0.4	19	0.0	0	19	8 + 240.000
8 + 252.420	12.420	0.0	0	0	0.0	0	0	0	24.0	243		243	-243	182,777	0	1.2	10	0.0	0	10	8 + 252.420
8 + 284.930	32.510	18.8	306	275	0.1	2	2	277	0.0	390		390	-113	182,664	277	0.0	20	4.5	73	93	8 + 284.930
8 + 321.780	36.850	0.0	346	312	0.0	2	2	314	132.8	2,447		2,447	-2,133	180,531	314	39.4	726	0.0	83	809	8 + 321.780
8 + 370.470	48.690	24.4	594	535	3.4	83	91	626	1.6	3,272		3,272	-2,646	177,885	626	6.0	1,105	7.5	183	1,288	8 + 370.470
8 + 394.000	23.530	0.0	287	258	0.0	40	44	302	62.0	748		748	-446	177,439	302	23.0	341	0.0	88	429	8 + 394.000
8 + 411.900	17.900	14.0	125	113	1.2	11	12	125	42.4	934		934	-810	176,629	125	25.9	438	8.5	76	514	8 + 411.900
8 + 433.980	22.080	0.0	155	139	0.0	13	15	154	122.0	1,815		1,815	-1,661	174,968	154	24.8	560	0.0	94	654	8 + 433.980
8 + 461.000	27.020	0.0	0	0	0.0	0	0	0	138.8	3,523		3,523	-3,523	171,444	0	29.6	735	0.0	0	735	8 + 461.000
8 + 473.800	12.800	0.4	3	2	0.0	0	0	2	161.2	1,920		1,920	-1,918	169,527	2	38.3	435	1.0	6	441	8 + 473.800
8 + 499.420	25.620	12.8	169	152	0.0	0	0	152	0.0	2,065		2,065	-1,913	167,614	152	0.0	491	3.8	61	552	8 + 499.420
8 + 539.620	40.200	6.8	394	355	0.0	0	0	355	0.0	0		0	355	167,968	0	0.0	0	1.6	109	109	8 + 539.620
8 + 553.390	13.770	0.0	47	42	0.0	0	0	42	12.5	86		86	-44	167,924	42	2.4	17	0.0	11	28	8 + 553.390
8 + 560.000	6.610	0.0	0	0	0.0	0	0	0	13.6	86		86	-86	167,838	0	1.6	13	0.0	0	13	8 + 560.000
8 + 580.000	20.000	0.0	0	0	0.0	0	0	0	88.8	1,024		1,024	-1,024	166,814	0	12.8	144	8.3	83	227	8 + 580.000
8 + 600.000	20.000	0.0	0	0	0.0	0	0	0	204.4	2,932		2,932	-2,932	163,882	0	18.7	315	15.3	236	551	8 + 600.000
8 + 620.000	20.000	0.0	0	0	0.0	0	0	0	38.0	2,424		2,424	-2,424	161,458	0	7.5	262	0.0	158	415	8 + 620.000
8 + 632.810	12.810	0.2	1	1	0.0	0	0	1	8.0	295		295	-293	161,165	1	5.0	80	0.0	0	80	8 + 632.810
8 + 673.330	40.520	0.0	4	4	0.0	0	0	4	26.0	689		689	-685	160,480	4	8.3	269	0.0	0	269	8 + 673.330
8 + 701.220	27.890	1.0	14	13	0.0	0	0	13	1.2	379		379	-367	160,113	13	1.0	130	0.0	0	130	8 + 701.220
8 + 739.330	38.110	0.0	19	17	0.0	0	0	17	212.0	4,063		4,063	-4,045	156,067	17	16.4	332	0.0	0	332	8 + 739.330
Sub Total	1,233.750		5,771	3,194		729	801	5,996		91,664		91,664	-85,669		2,860		14,717		5,020	19,758	Sub Total
Total	8,699.390		152,884	137,970		340,908	374,993	512,962		356,895		356,895	156,067		38,147		58,847		45,758	104,605	Total

6-36√

Station	Distance (m)	Earthwork														Slope Protection					Station
		Cut Volume							Embankment Volume				Balance A - B (m3)	Accumulated Volume (m3)	Lateral Volume (m3)	Left Side		Right Side		Total Area (m2)	
		Common (C=0.90)			Weathered Rock (C=1.10)			Total Corrected Cut Volume A (m3)	Embankment Section			Total Embankment Volume B (m3)				Slope Length (m)	Area (m2)	Slope Length (m)	Area (m2)		
		Sectional Area (m2)	Ground Volume (m3)	Corrected Volume (m3)	Sectional Area (m2)	Ground Volume (m3)	Corrected Volume (m3)		Sectional Area (m2)	Volume (m3)	Vary Volume (m3)										
8 + 739.330		0.0			0.0				212.0					156,067		16.4		0.0			8 + 739.330
8 + 784.150	44.820	0.0	0	0	0.0	0	0	0	365.8	12,948		12,948	-12,948	143,119	0	41.7	1,302	17.3	388	1,690	8 + 784.150
8 + 804.660	20.510	0.0	0	0	0.0	0	0	0	444.2	8,307		8,307	-8,307	134,812	0	36.3	800	22.8	411	1,211	8 + 804.660
8 + 837.710	33.050	0.0	0	0	0.0	0	0	0	82.8	8,709		8,709	-8,709	126,104	0	13.4	821	0.0	377	1,198	8 + 837.710
8 + 870.440	32.730	8.4	137	124	0.0	0	0	124	0.0	1,355		1,355	-1,231	124,872	124	0.0	219	2.3	38	257	8 + 870.440
8 + 919.700	49.260	1.4	241	217	0.0	0	0	217	0.8	20		20	198	125,070	20	0.6	15	0.5	69	84	8 + 919.700
8 + 935.500	15.800	0.0	11	10	0.0	0	0	10	83.8	668		668	-658	124,412	10	7.0	60	0.0	4	64	8 + 935.500
8 + 940.000	4.500	0.0	0	0	0.0	0	0	0	89.6	390		390	-390	124,021	0	13.3	46	0.0	0	46	8 + 940.000
8 + 960.000	20.000	2.0	20	18	0.0	0	0	18	0.0	896		896	-878	123,143	18	0.0	133	0.7	7	140	8 + 960.000
8 + 980.000	20.000	7.6	96	86	0.0	0	0	86	0.0	0		0	86	123,230	0	0.6	6	1.7	24	30	8 + 980.000
8 + 990.000	10.000	5.6	66	59	0.0	0	0	59	0.0	0		0	59	123,289	0	0.0	3	1.4	16	19	8 + 990.000
9 + 0.000	10.000	0.4	30	27	0.0	0	0	27	1.2	6		6	21	123,310	6	1.3	7	0.0	7	14	9 + 0.000
9 + 20.000	20.000	0.0	4	4	0.0	0	0	4	10.6	118		118	-114	123,196	4	3.1	44	0.0	0	44	9 + 20.000
9 + 40.010	20.010	0.0	0	0	0.0	0	0	0	28.2	388		388	-388	122,808	0	13.1	162	0.0	0	162	9 + 40.010
9 + 74.470	34.460	0.0	0	0	0.0	0	0	0	177.6	3,546		3,546	-3,546	119,262	0	13.0	450	0.0	0	450	9 + 74.470
9 + 80.000	5.530	0.0	0	0	0.0	0	0	0	140.6	880		880	-880	118,382	0	14.4	76	13.9	38	114	9 + 80.000
9 + 83.500	3.500	0.0	0	0	0.0	0	0	0	214.2	621		621	-621	117,761	0	22.4	64	16.2	53	117	9 + 83.500
9 + 100.000	16.500	0.9	7	7	0.0	0	0	7	5.2	1,810		1,810	-1,803	115,958	7	3.6	215	0.6	139	353	9 + 100.000
9 + 110.000	10.000	4.4	27	24	0.0	0	0	24	0.8	30		30	-6	115,951	24	1.0	23	1.8	12	35	9 + 110.000
9 + 120.000	10.000	0.0	22	20	0.0	0	0	20	11.2	60		60	-40	115,911	20	3.4	22	0.0	9	31	9 + 120.000
9 + 140.000	20.000	0.0	0	0	0.0	0	0	0	163.2	1,744		1,744	-1,744	114,167	0	16.4	198	0.0	0	198	9 + 140.000
9 + 160.000	20.000	0.0	0	0	0.0	0	0	0	174.4	3,376		3,376	-3,376	110,791	0	17.9	343	12.8	128	471	9 + 160.000
9 + 163.000	3.000	0.0	0	0	0.0	0	0	0	189.2	545		545	-545	110,246	0	15.6	50	16.9	45	95	9 + 163.000
9 + 180.000	17.000	0.0	0	0	0.0	0	0	0	34.2	1,899		1,899	-1,899	108,347	0	7.3	195	4.0	178	372	9 + 180.000
9 + 200.000	20.000	13.2	132	119	0.0	0	0	119	0.0	342		342	-223	108,124	119	0.0	73	4.0	80	153	9 + 200.000
9 + 220.000	20.000	23.2	364	328	6.0	60	66	394	0.0	0		0	394	108,517	0	1.6	16	4.7	87	103	9 + 220.000
9 + 240.000	20.000	5.2	284	256	0.0	60	66	322	0.4	4		4	318	108,835	4	0.8	24	2.5	72	96	9 + 240.000
9 + 244.600	4.600	0.0	12	11	0.0	0	0	11	16.3	38		38	-28	108,807	11	3.7	10	1.9	10	20	9 + 244.600
9 + 253.670	9.070	24.4	111	100	14.0	63	70	169	0.0	74		74	96	108,903	74	2.5	28	3.5	24	53	9 + 253.670
9 + 301.000	47.330	61.2	2,026	1,823	271.2	6,749	7,424	9,247	0.0	0		0	9,247	118,150	0	2.4	116	3.5	166	282	9 + 301.000
9 + 340.370	39.370	85.6	2,890	2,601	440.0	14,000	15,400	18,001	0.0	0		0	18,001	136,151	0	2.8	102	2.3	114	217	9 + 340.370
9 + 379.800	39.430	37.9	2,435	2,191	42.0	9,503	10,453	12,644	0.0	0		0	12,644	148,795	0	5.0	154	3.5	114	268	9 + 379.800
9 + 410.190	30.390	35.2	1,111	1,000	55.6	1,483	1,631	2,631	0.0	0		0	2,631	151,426	0	2.5	114	3.8	111	225	9 + 410.190
9 + 439.530	29.340	31.6	980	882	17.6	1,074	1,181	2,063	0.0	0		0	2,063	153,489	0	3.2	84	3.7	110	194	9 + 439.530
9 + 481.770	42.240	0.0	667	601	0.0	372	409	1,010	37.6	794		794	215	153,705	794	5.5	184	6.2	209	393	9 + 481.770
9 + 503.240	21.470	0.0	0	0	0.0	0	0	0	445.2	5,183		5,183	-5,183	148,522	0	29.2	373	26.6	352	725	9 + 503.240
9 + 514.990	11.750	0.0	0	0	0.0	0	0	0	201.2	3,798		3,798	-3,798	144,724	0	18.6	281	14.0	239	519	9 + 514.990
9 + 520.000	5.010	0.0	0	0	0.0	0	0	0	133.0	837		837	-837	143,887	0	16.0	87	12.5	66	153	9 + 520.000
9 + 540.000	20.000	26.0	260	234	32.0	320	352	586	0.0	1,330		1,330	-744	143,143	586	2.3	183	3.2	157	340	9 + 540.000
9 + 560.000	20.000	41.4	674	607	172.4	2,044	2,248	2,855	0.0	0		0	2,855	145,998	0	1.5	38	2.8	60	98	9 + 560.000
9 + 580.000	20.000	89.2	1,306	1,175	357.0	5,294	5,823	6,999	0.0	0		0	6,999	152,997	0	2.2	37	4.1	69	106	9 + 580.000
9 + 600.000	20.000	81.8	1,710	1,539	369.4	7,264	7,990	9,529	0.0	0		0	9,529	162,526	0	3.0	52	3.5	76	128	9 + 600.000
9 + 610.000	10.000	78.0	799	719	336.2	3,528	3,881	4,600	0.0	0		0	4,600	167,126	0	3.2	31	3.5	35	66	9 + 610.000
9 + 620.000	10.000	76.8	774	697	309.8	3,230	3,553	4,250	0.0	0		0	4,250	171,376	0	2.3	28	4.1	38	66	9 + 620.000
9 + 640.000	20.000	56.4	1,332	1,199	198.8	5,086	5,595	6,793	0.0	0		0	6,793	178,169	0	2.5	48	3.5	76	124	9 + 640.000
9 + 645.000	5.000	56.0	281	253	158.4	893	982	1,235	0.0	0		0	1,235	179,404	0	2.5	13	4.2	19	32	9 + 645.000
9 + 660.000	15.000	26.8	621	559	24.6	1,373	1,510	2,069	0.0	0		0	2,069	181,473	0	2.4	37	4.4	65	101	9 + 660.000
9 + 673.200	13.200	0.0	177	159	0.0	162	179	338	64.4	425		425	-87	181,386	338	11.4	91	7.3	77	168	9 + 673.200
9 + 697.140	23.940	42.4	508	457	74.4	891	980	1,436	0.0	771		771	666	182,051	771	3.5	178	3.7	132	310	9 + 697.140
9 + 732.490	35.350	57.6	1,768	1,591	147.2	3,917	4,308	5,899	0.0	0		0	5,899	187,951	0	3.3	120	3.2	122	242	9 + 732.490
9 + 770.660	38.170	32.8	1,725	1,553	72.8	4,199	4,619	6,171	0.0	0		0	6,171	194,122	0	2.5	111	3.0	118	229	9 + 770.660
9 + 809.250	38.590	0.0	633	570	0.0	1,405	1,545	2,115	99.2	1,914		1,914	201	194,323	1,914	18.7	409	4.5	145	554	9 + 809.250
9 + 845.800	36.550	22.0	402	362	1.7	31	34	396	0.0	1,813		1,813	-1,417	192,906	396	2.0	378	3.4	144	523	9 + 845.800
9 + 868.240	22.440	22.4	498	448	11.6	149	164	612	0.0	0		0	612	193,518	0	2.6	52	3.3	75	127	9 + 868.240
9 + 880.000	11.760	21.2	256	231	12.0	139	153	383	0.0	0		0	383	193,902	0	2.5	30	3.0	37	67	9 + 880.000
9 + 900.000	20.000	10.8	320	288	0.0	120	132	420	0.0	0		0	420	194,322	0	0.8	33	2.1	51	84	9 + 900.000
9 + 920.000	20.000	0.0	108	97	0.0	0	0	97	35.3	353		353	-256	194,066	97	11.6	124	3.0	51	175	9 + 920.000
9 + 940.000	20.000	0.0	0	0	0.0	0	0	0	160.4	1,957		1,957	-1,957	192,109	0	25.4	370	11.1	141	511	9 + 940.000
9 + 960.000	20.000	0.0	0	0	0.0	0	0	0	81.8	2,422		2,422	-2,422	189,687	0	15.5	409	5.9	170	579	9 + 960.000
9 + 966.460	6.460	0.0	0	0	0.0	0	0	0	58.4	453		453	-453	189,234	0	14.4	97	3.7	31	128	9 + 966.460
Sub Total	1,227.130		25,824	23,242		73,408	80,748	103,990		70,824		70,824	33,166		3,335		9,765		3,585	13,350	Sub Total
Total	9,926.520		178,708	161,212		414,310	455,741	616,953		427,719		427,719	189,234		43,482		68,612		51,343	119,955	Total

8-366

Station	Distance	Earthwork														Slope Protection					Station
		Cut Volume							Embankment Volume							Left Side		Right Side			
		Common (C=0.90)			Weathered Rock (C=1.10)			Total	Embankment Section			Total	Balance	Accumulated	Lateral					Total	
	(m)	Sectional Area (m2)	Ground Volume (m3)	Corrected Volume (m3)	Sectional Area (m2)	Ground Volume (m3)	Corrected Volume (m3)	Corrected Cut Volume A (m3)	Sectional Area (m2)	Volume (m3)	Vary Volume (m3)	Embankment Volume B (m3)	A - B (m3)	Volume (m3)	Volume (m3)	Slope Length (m)	Area (m2)	Slope Length (m)	Area (m2)	Area (m2)	
9 + 966.460		0.0			0.0				58.4					189,234		14.4		3.7			9 + 966.460
10 + 16.250	49.790	0.0	0	0	0.0	0	0	0	29.2	2,181		2,181	-2,181	187,053	0	12.4	667	1.3	124	792	10 + 16.250
10 + 59.970	43.720	0.0	0	0	0.0	0	0	0	347.2	8,228		8,228	-8,228	178,825	0	34.9	1,034	14.4	343	1,377	10 + 59.970
10 + 90.950	30.980	0.0	0	0	0.0	0	0	0	134.3	7,458		7,458	-7,458	171,367	0	11.5	719	9.9	376	1,095	10 + 90.950
10 + 124.260	33.310	10.4	173	156	0.0	0	0	156	0.0	2,237		2,237	-2,081	169,286	156	1.8	222	0.5	173	395	10 + 124.260
10 + 170.840	46.530	44.8	1,286	1,157	140.8	3,279	3,607	4,764	0.0	0		0	4,764	174,050	0	2.3	95	3.6	95	191	10 + 170.840
10 + 185.840	15.000	50.4	714	643	183.0	2,429	2,671	3,314	0.0	0		0	3,314	177,364	0	2.1	33	3.5	53	86	10 + 185.840
10 + 228.310	42.470	28.8	1,682	1,514	8.8	4,073	4,480	5,994	0.0	0		0	5,994	183,358	0	3.3	115	4.5	170	285	10 + 228.310
10 + 272.200	43.890	0.0	632	569	0.0	193	212	781	19.2	421		421	360	183,717	421	1.4	108	8.0	274	377	10 + 272.200
10 + 296.200	24.000	0.0	0	0	0.0	0	0	0	81.2	1,205		1,205	-1,205	182,513	0	11.3	152	7.5	186	338	10 + 296.200
10 + 331.500	35.300	0.0	0	0	0.0	0	0	0	127.6	3,685		3,685	-3,685	178,827	0	17.7	512	7.0	256	768	10 + 331.500
10 + 355.150	23.650	0.0	0	0	0.0	0	0	0	5.4	1,573		1,573	-1,573	177,255	0	2.1	234	0.6	90	324	10 + 355.150
10 + 386.260	31.110	0.0	0	0	0.0	0	0	0	11.2	258		258	-258	176,996	0	2.2	67	2.2	44	110	10 + 386.260
10 + 398.380	12.120	0.0	0	0	0.0	0	0	0	28.4	240		240	-240	176,756	0	4.6	41	4.5	41	82	10 + 398.380
10 + 420.000	21.620	0.0	0	0	0.0	0	0	0	78.8	1,159		1,159	-1,159	175,598	0	11.0	169	13.7	197	365	10 + 420.000
10 + 429.000	9.000	0.0	0	0	0.0	0	0	0	89.2	756		756	-756	174,842	0	14.4	114	8.0	98	212	10 + 429.000
10 + 440.000	11.000	0.0	0	0	0.0	0	0	0	4.8	517		517	-517	174,325	0	1.5	87	0.4	46	134	10 + 440.000
10 + 460.000	20.000	14.8	148	133	0.0	0	0	133	0.0	48		48	85	174,410	48	2.0	35	2.1	25	60	10 + 460.000
10 + 480.000	20.000	23.6	404	364	24.6	246	271	634	0.0	0		0	634	175,044	0	2.7	47	3.0	51	98	10 + 480.000
10 + 491.580	11.580	28.0	310	279	38.4	365	401	681	0.0	0		0	681	175,725	0	2.5	30	2.9	34	64	10 + 491.580
10 + 517.800	26.220	30.0	760	684	45.2	1,096	1,206	1,890	0.0	0		0	1,890	177,615	0	2.5	66	3.5	84	149	10 + 517.800
10 + 549.250	31.450	6.0	566	509	0.0	711	782	1,291	0.0	0		0	1,291	178,906	0	0.3	44	1.6	80	124	10 + 549.250
10 + 568.040	18.790	56.8	590	531	118.0	1,109	1,219	1,750	0.0	0		0	1,750	180,656	0	3.8	39	3.3	46	85	10 + 568.040
10 + 596.840	28.800	54.4	1,601	1,441	247.6	5,265	5,791	7,232	0.0	0		0	7,232	187,888	0	2.5	91	3.0	91	181	10 + 596.840
10 + 634.870	38.030	26.4	1,536	1,383	23.6	5,157	5,673	7,055	0.0	0		0	7,055	194,944	0	2.5	95	3.5	124	219	10 + 634.870
10 + 640.000	5.130	24.8	131	118	13.6	95	105	223	0.0	0		0	223	195,167	0	3.2	15	3.4	18	32	10 + 640.000
10 + 660.000	20.000	22.8	476	428	0.0	136	150	578	0.0	0		0	578	195,745	0	3.0	62	3.3	67	129	10 + 660.000
10 + 670.000	10.000	18.4	206	185	0.0	0	0	185	0.0	0		0	185	195,930	0	2.2	26	2.9	31	57	10 + 670.000
10 + 680.000	10.000	28.8	236	212	24.4	122	134	347	0.0	0		0	347	196,277	0	3.6	29	3.5	32	61	10 + 680.000
10 + 700.000	20.000	0.0	288	259	0.0	244	268	528	83.2	832		832	-304	195,973	528	11.6	152	6.4	99	251	10 + 700.000
10 + 715.000	15.000	0.0	0	0	0.0	0	0	0	1,030.0	8,349		8,349	-8,349	187,624	0	60.9	544	41.4	359	902	10 + 715.000
10 + 728.600	13.600	0.0	0	0	0.0	0	0	0	211.0	8,439		8,439	-8,439	179,185	0	25.7	589	16.6	394	983	10 + 728.600
10 + 757.920	29.320	0.3	4	4	0.0	0	0	4	1.0	3,108		3,108	-3,104	176,081	4	0.0	377	0.0	243	620	10 + 757.920
10 + 804.750	46.830	27.3	646	582	35.2	824	907	1,488	0.0	23		23	1,465	177,546	23	2.5	59	6.8	159	218	10 + 804.750
10 + 850.000	45.250	50.4	1,758	1,582	218.4	5,738	6,311	7,894	0.0	0		0	7,894	185,439	0	1.1	81	4.2	249	330	10 + 850.000
10 + 865.570	15.570	62.0	875	788	274.8	3,840	4,224	5,011	0.0	0		0	5,011	190,450	0	2.1	25	3.7	62	86	10 + 865.570
10 + 898.110	32.540	64.8	2,063	1,857	218.8	8,031	8,834	10,691	0.0	0		0	10,691	201,141	0	2.5	75	3.9	124	198	10 + 898.110
10 + 904.740	6.630	64.0	427	384	190.8	1,358	1,494	1,878	0.0	0		0	1,878	203,019	0	3.0	18	3.6	25	43	10 + 904.740
10 + 920.000	15.260	57.2	925	832	114.6	2,330	2,563	3,396	0.0	0		0	3,396	206,415	0	3.3	48	3.8	56	105	10 + 920.000
10 + 940.000	20.000	34.8	920	828	36.0	1,506	1,657	2,485	0.0	0		0	2,485	208,899	0	3.8	71	3.6	74	145	10 + 940.000
10 + 949.000	9.000	22.8	259	233	0.1	162	179	412	0.0	0		0	412	209,311	0	2.5	28	4.0	34	63	10 + 949.000
10 + 960.000	11.000	30.6	294	264	13.2	73	80	345	0.0	0		0	345	209,656	0	3.2	31	4.0	44	75	10 + 960.000
10 + 989.340	29.340	32.0	918	827	21.0	502	552	1,378	0.0	0		0	1,378	211,034	0	2.3	81	4.1	119	200	10 + 989.340
11 + 51.170	61.830	32.4	1,991	1,792	20.2	1,274	1,401	3,193	0.0	0		0	3,198	214,227	0	3.0	164	4.5	266	430	11 + 51.170
11 + 85.000	33.830	16.4	825	743	0.0	342	376	1,119	0.0	0		0	1,119	215,346	0	0.0	51	3.3	132	183	11 + 85.000
11 + 100.000	15.000	0.0	123	111	0.0	0	0	111	27.6	207		207	-96	215,250	111	6.1	46	3.8	53	99	11 + 100.000
11 + 130.000	30.000	0.0	0	0	0.0	0	0	0	58.4	1,290		1,290	-1,290	213,960	0	13.7	297	0.0	57	354	11 + 130.000
11 + 200.000	70.000	24.8	868	781	11.8	413	454	1,236	0.0	2,044		2,044	-809	213,151	1,236	1.7	339	4.1	144	683	11 + 200.000
11 + 240.000	40.000	31.0	1,116	1,004	59.4	1,424	1,566	2,571	0.0	0		0	2,571	215,722	0	1.5	64	3.9	160	224	11 + 240.000
11 + 285.000	45.000	19.2	1,130	1,017	4.0	1,427	1,569	2,586	0.0	0		0	2,586	218,308	0	0.0	34	3.8	218	252	11 + 285.000
11 + 320.000	35.000	15.4	606	545	0.4	77	85	630	0.0	0		0	630	218,937	0	0.0	0	5.0	189	189	11 + 320.000
11 + 370.000	50.000	26.4	1,045	941	21.8	555	611	1,551	0.0	0		0	1,551	220,488	0	2.2	55	4.3	233	288	11 + 370.000
11 + 385.000	15.000	44.8	534	481	41.6	476	523	1,004	0.0	0		0	1,004	221,492	0	1.5	28	7.8	91	119	11 + 385.000
11 + 420.000	35.000	34.8	1,393	1,254	35.2	1,344	1,478	2,732	0.0	0		0	2,732	224,224	0	1.5	53	8.3	282	334	11 + 420.000
11 + 460.000	40.000	30.0	1,296	1,166	12.8	960	1,056	2,222	0.0	0		0	2,222	226,446	0	1.3	56	8.7	340	396	11 + 460.000
11 + 485.000	25.000	27.4	718	646	74.8	1,095	1,205	1,850	0.0	0		0	1,850	228,297	0	1.0	29	5.4	176	205	11 + 485.000
11 + 555.000	70.000	20.4	1,673	1,506	30.0	3,668	4,035	5,541	0.0	0		0	5,541	233,837	0	0.0	35	3.8	322	357	11 + 555.000
11 + 600.000	45.000	23.4	986	887	52.0	1,845	2,030	2,916	0.0	0		0	2,916	236,754	0	0.0	0	2.3	137	137	11 + 600.000
11 + 650.000	50.000	24.4	1,195	1,076	27.7	1,993	2,192	3,267	0.0	0		0	3,267	240,021	0	0.0	0	5.6	198	198	11 + 650.000
11 + 700.000	50.000	14.8	980	882	15.6	1,083	1,191	2,073	0.0	0		0	2,073	242,094	0	0.0	0	5.5	278	278	11 + 700.000
Sub Total	1,733.540		37,308	33,577		66,856	73,541	107,118		34,258		34,258	52,860		2,526		8,570		8,564	17,134	Sub Total
Total	11,660.060		216,016	194,788		481,166	529,283	724,071		481,977		481,977	242,094		46,008		77,183		59,907	137,090	Total

6-367

Station	Distance (m)	Earthwork														Slope Protection					Station
		Cut Volume							Embankment Volume				Balance A - B (m3)	Accumulated Volume (m3)	Lateral Volume (m3)	Left Side		Right Side		Total Area (m2)	
		Common (C=0.90)			Weathered Rock (C=1.10)			Total Corrected Cut Volume A (m3)	Embankment Section			Total Embankment Volume B (m3)									
		Sectional Area (m2)	Ground Volume (m3)	Corrected Volume (m3)	Sectional Area (m2)	Ground Volume (m3)	Corrected Volume (m3)		Sectional Area (m2)	Volume (m3)	Vary Volume (m3)					Slope Length (m)	Area (m2)	Slope Length (m)	Area (m2)		
11 + 700.000		14.8			15.6				0.0					242,094		0.0		5.5			11 + 700.000
11 + 740.000	40.000	39.4	1,084	976	25.6	824	906	1,882	0.0	0		0	1,882	243,976	0	2.6	52	5.0	210	262	11 + 740.000
11 + 771.680	31.680	6.4	725	653	15.6	653	718	1,371	0.0	0		0	1,371	245,346	0	0.0	41	0.0	79	120	11 + 771.680
+																					+
+																					+
+																					+
+																					+
+																					+
+																					+
+																					+
+																					+
+																					+
+																					+
+																					+
+																					+
+																					+
+																					+
+																					+
+																					+
+																					+
+																					+
+																					+
+																					+
+																					+
+																					+
+																					+
+																					+
+																					+
+																					+
+																					+
+																					+
+																					+
+																					+
+																					+
+																					+
+																					+
+																					+
+																					+
+																					+
+																					+
+																					+
+																					+
+																					+
+																					+
+																					+
+																					+
+																					+
+																					+
+																					+
+																					+
+																					+
+																					+
+																					+
+																					+
+																					+
+																					+
+																					+
+																					+
+																					+
+																					+
Sub Total	71.680		1,809	1,629		1,477	1,624	3,253		0		0	3,253		0		93		289	382	Sub Total
Total	11,731.740		217,825	196,417		482,643	530,907	727,324		481,977		481,977	245,346		46,008		77,276		60,196	137,472	Total

Working Division: 6 Conguillo Access Road

Description	Calculation Details	Unit	Quantity	Remarks
6.2	Excavation and Filling for Structures			
	Retaining wall			
109	Open-cut excavation, all classes			
	$V_1 = (2.0 + 4.4)/2 \times 2.4 \times 40.0 = 307.2\ m^3$			
	$V_2 = [(3.0+5.9)/2 \times 2.9 + (1.8+4.3)/2 \times 2.5]/2 \times 57.0 = 585.1$			
	$V_3 = (1.8+3.55)/2 \times 1.75 \times 16.4 = 76.8$			
	$V_4 = (2,0+4.5)/2 \times 2.5 \times 41.3 = 335.6$			
	$V5 = (2.0+4.5)/2 \times 2.5 \times 40.6 = 329.9$			
	$V6 = (2.4+5.1)/2 \times 2.7 \times 17.8 = 180.2$			
	$V7 = (2.8+6.3)/2 \times 3.5 \times 22.8 = 363.1$			
	$V8 = (2.4+5.2)/2 \times 2.8 \times 22.5 = 239.4$			
	$V9 = (2,0 + 4.25)/2 \times 2,25 \times 58.8 = 413.4$			
	$V10 = (1.8+3.75)/2 \times 1.95 \times 36.8 = 199.1$			
	$V11 = (2.7+5.85)/2 \times 3.15 \times 15.9 = 214.1$			
	$V12 = (1.7+3.55)/2 \times 1.85 \times 21.1 = 102.5$			
	$V13 = (2,0+4.0)/2 \times 2,0 \times 67.8 = 406.8$			
	$V14 = (2.7+5.7)/2 \times 3.0 \times 16.9 = 212.9$			
	$V15 = (2.6+5.95)/2 \times 3.35 \times 22.5 = 322.2$			
	$V16 = (2.6+5.65)/2 \times 3.05 \times 20.0 = 251.6$			
	Total			
	$V = 4,539.9 + 211 = 4750.9$	m^3	4751	

Working Division: 6

Description	Calculation Details	Unit	Quantity	Remarks
/10	Backfill			
	$V_1 = 307.2 - (2.0+1.6)/2 \times 2.4 \times 40.0 = 134.4$			
	$V2 = 585.1 - (2.4+1.9)/2 \times 2.13 \times 57.0 = 324.1$			
	$V3 = 76.8 - (1.8+1.44)/2 \times 1.75 \times 16.4 = 30.3$			
	$V4 = 335.6 - (2.0+1.6)/2 \times 2.5 \times 41.3 = 149.8$			
	$V5 = 329.9 - (2.0+1.68)/2 \times 2.5 \times 40.6 = 143.1$			
	$V6 = 180.2 - (2.4+1.985)/2 \times 2.7 \times 17.8 = 74.8$			
	$V7 = 363.1 - (2.8+2.245)/2 \times 3.5 \times 22.8 = 161.8$			
	$V8 = 239.4 - (2.4+1.935)/2 \times 2.8 \times 22.5 = 102.8$			
	$V9 = 413.4 - (2.0+1.615)/2 \times 2.25 \times 58.8 = 174.3$			
	$V10 = 199.1 - (1.8+1.49)/2 \times 1.95 \times 36.8 = 81.1$			
	$V11 = 214.1 - (2.7+2.15)/2 \times 3.15 \times 15.9 = 92.6$			
	$V12 = 102.5 - (1.7+1.35)/2 \times 1.85 \times 21.1 = 43.0$			
	$V13 = 406.8 - (2.0+1.75)/2 \times 2.0 \times 67.8 = 152.6$			
	$V14 = 212.9 - (2.7+2.165)/2 \times 3.0 \times 16.9 = 89.6$			
	$V15 = 322.2 - (2.6+2.0)/2 \times 3.35 \times 22.5 = 148.8$			
	$V16 = 251.6 - (2.6+2.0)/2 \times 3.05 \times 20.0 = 111.3$			
	Total 2,014.4			
	$V = 2{,}014.4 \times 2/3 = 1{,}342.9$			
		m^3	1,343	
/11	Free draining backfill			
	$V = 2{,}014.4 \times 1/3 = 671$			
		m^3	671	

Working Division: 6

Description	Calculation Details	Unit	Quantity	Remarks
112	Gravel bedding			
	V1 = 2.0 × 40 × 0.2 = 1.6			
	V2 = 2.4 × 57.0 × 0.2 = 27.36			
	V3 = 1.8 × 16.4 × 0.2 = 5.90			
	V4 = 2.0 × 41.3 × 0.2 = 16.52			
	V5 = 2.0 × 40.6 × 0.2 = 16.24			
	V6 = 2.4 × 17.8 × 0.2 = 8.54			
	V7 = 2.8 × 22.8 × 0.2 = 12.77			
	V8 = 2.4 × 22.5 × 0.2 = 10.80			
	V9 = 2.0 × 58.8 × 0.2 = 23.52			
	V10 = 1.8 × 36.8 × 0.2 = 13.25			
	V11 = 2.7 × 15.9 × 0.2 = 8.59			
	V12 = 1.7 × 21.1 × 0.2 = 7.17			
	V13 = 2.0 × 67.8 × 0.2 = 27.12			
	V14 = 2.7 × 16.9 × 0.2 = 9.13			
	V15 = 2.6 × 22.5 × 0.2 = 11.7			
	V16 = 2.6 × 20.0 × 0.2 = 10.4			
	Total 210.61			
		m^3	211	

Working Division: 6 Conguillo Access Road

Description	Calculation Details	Unit	Quantity	Remarks
6.4	Concrete Works			
105	Rubble concrete for retaining wall			
	V1 = (1.2+2.0)/2×4.8×40.0 = 307.2			
	V2 = (2.4+1.4)/2×5.4×57.0 = 584.8			
	V3 = (1.8+1.08)/2×3.5×16.4 = 82.7			
	V4 = (2.0+1.2)/2×5.0×41.3 = 330.4			
	V5 = (2.0+1.36)/2×5.0×40.6 = 341.0			
	V6 = (2.4+1.57)/2×5.4×17.8 = 190.8			
	V7 = (2.8+1.69)/2×7.0×22.8 = 358.3			
	V8 = (2.4+1.47)/2×5.6×22.5 = 243.8			
	V9 = (2.0+1.23)/2×4.5×58.8 = 427.3			
	V10 = (1.8+1.18)/2×3.9×36.8 = 213.8			
	V11 = (2.7+1.6)/2×6.3×15.9 = 215.4			
	V12 = (1.7+1.0)/2×3.7×21.1 = 105.4			
	V13 = (1.5+2.0)/2×4.0×67.8 = 474.6			
	V14 = (2.7+1.63)/2×6.0×16.9 = 219.5			
	V15 = (2.6+1.4)/2×6.7×22.5 = 301.5			
	V16 = (2.6+1.4)/2×6.1×20.0 = 244.0			
	Total 4,640.5			
		m³	4,641	
106	Formwork, F1 finish			
	Retaining wall			

Working Division: 6

Description	Calculation Details	Unit	Quantity	Remarks
	$A_1 = 4.8 \times 40.0 = 192.0$			
	$A_2 = 5.4 \times 57.0 = 307.8$			
	$A_3 = 3.5 \times 16.4 = 57.4$			
	$A_4 = 5.0 \times 41.3 = 206.5$			
	$A_5 = 5.0 \times 40.6 = 203.0$			
	$A_6 = 5.4 \times 17.8 = 96.1$			
	$A_7 = 7.0 \times 22.8 = 159.6$			
	$A_8 = 5.6 \times 22.5 = 126.0$			
	$A_9 = 4.5 \times 58.8 = 264.6$			
	$A_{10} = 3.9 \times 36.8 = 143.5$			
	$A_{11} = 6.3 \times 15.9 = 100.2$			
	$A_{12} = 3.7 \times 21.1 = 78.1$			
	$A_{13} = 4.0 \times 67.8 = 271.2$			
	$A_{14} = 6.0 \times 16.9 = 101.4$			
	$A_{15} = 6.7 \times 22.5 = 150.8$			
	$A_{16} = 6.1 \times 20.0 = 122.0$			
	2,580.2			
	$2580.2 \times 1.5 = 3,870.3\ m^2$			
	Contraction joints			
	$A_1 = (1.2+2.0)/2 \times 4.8 \times 2 = 15.36$			
	$A_2 = (2.4+1.4)/2 \times 5.4 \times 3 = 30.78$			
	$A_3 = 0$			
	$A_4 = (2.0+1.2)/2 \times 5.0 \times 2 = 16.00$			
	$A_5 = (2.0+1.36)/2 \times 5.0 \times 2 = 16.8$			
	$A_6 = (2.4+1.57)/2 \times 5.4 \times 1 = 10.72$			
	$A_7 = (2.8+1.69)/2 \times 7.0 \times 1 = 15.72$			
	$A_8 = (2.4+1.47)/2 \times 5.6 \times 1 = 10.84$			

Working Division: 6

Description	Calculation Details	Unit	Quantity	Remarks
	$A_9 = (2{,}0 + 1.23)/2 \times 4.5 \times 3 = 21.80$			
	$A_{10} = (1.8 + 1.18)/2 \times 3.9 \times 2 = 11.62$			
	$A_{11} = (2.7 + 1.6)/2 \times 6.3 \times 1 = 13.55$			
	$A_{12} = (1.7 + 1.0)/2 \times 3.7 \times 1 = 5.0$			
	$A_{13} = (1.5 + 2.0)/2 \times 4.0 \times 4 = 28.0$			
	$A_{14} = (2.7 + 1.63)/2 \times 6.0 \times 1 = 12.99$			
	$A_{15} = (2.6 + 1.4)/2 \times 6.7 \times 1 = 13.40$			
	$A_{16} = (2{,}6 + 1.4)/2 \times 6.1 \times 1 = 12.2$			
	234.78			
	Total			
	$A = 3870.3 + 234.8 = 4{,}105.1$			
		m²	4105	
/07	Formwork, F2 finish			
	Retaining wall			
	$A = 2580.2/2 = 1{,}290.1$			
		m²	1,290	
/12	Bituminous coating for contraction joint			
	Retaining wall			
	$A = 234.78\,m^2$			
		m²	235	

Working Division: 6 Conguillo Access Road

Description	Calculation Details	Unit	Quantity	Remarks
6.5	Pavement			
101	Improved subgrade material			
	Cut section			
	L = 15 764.22 m			
	Embankment section			
	L = 6, 980.37 m			
	V = 6.0 × 0.075 × 15 764.22			
	+ 6.0 × (0.35 + 0.2)/2 × 6 980.37			
	= 18 611.5			
		m³	18612	
102	Graded crushed stone subbase			
	V = 6.0 × 0.15 × 22 744.59 = 20 470			
		m³	20470	
103	Transportation of improved subgrade material			
	V = 18 611.5 × 0.01 × 10 km = 1861.2			
		m³·km	1861	

Working Division: 6

Description	Calculation Details	Unit	Quantity	Remarks
6.6	Miscellaneous			
101	Guardrail			
	Bridge sites (2 Bridges)			
	$L = 40m \times 2 = 80m$			
		m	80	
102	Warning signs			
	$N = 22744.6/250 = 90$			
		nos	90	
107	PVC pipe, ϕ75 mm for weep hole			
	Retaining wall			
	$\ell_1 = 40.0/1.5 \times 2.0 =$ 54.0 m			
	$\ell_2 = 57.0/1.5 \times 2.4 =$ 91.2 m			
	$\ell_3 = 16.4/1.5 \times 1.8 =$ 19.8 m			
	$\ell_4 = 41.3/1.5 \times 2.0 =$ 56.0 m			
	$\ell_5 = 40.6/1.5 \times 2.0 =$ 54.0 m			
	$\ell_6 = 17.8/1.5 \times 2.4 =$ 28.8 m			
	$\ell_7 = 22.8/1.5 \times 2.8 =$ 42.0 m			
	$\ell_8 = 22.5/1.5 \times 2.4 =$ 36.0 m			
	$\ell_9 = 58.8/1.5 \times 2.0 =$ 78.0 m			
	$\ell_{10} = 36.8/1.5 \times 1.8 =$ 45.0 m			
	$\ell_{11} = 15.9/1.5 \times 2.7 =$ 29.7 m			

Working Division: 6

Description	Calculation Details	Unit	Quantity	Remarks
	$\ell_{12} = 21.1/1.5 \times 1.7 = 23.8$ m			
	$\ell_{13} = 67.8/1.5 \times 2.0 = 90.0$ m			
	$\ell_{14} = 16.9/1.5 \times 2.7 = 29.7$ m			
	$\ell_{15} = 22.5/1.5 \times 2.6 = 39.0$ m			
	$\ell_{16} = 20.0/1.5 \times 2.6 = 33.8$ m			
	Total 750.8 m			
		m	751	

Working Division: 7 El Guasmo Access Road

Description	Calculation Details	Unit	Quantity	Remarks
7-1	Earthwork			
101	Clearing			
	A = 23 157			
		m²	23 157	
106	Compaction of original ground			
	A = 4.0 × 1118.75 × 0.1 = 447.5			
		m²	448	

7.1/01 Clearing

El Guamo			
Clearing		Total Area (m2)	Station
Length (m)	Area (m2)		
9.7			0 + 0.000
10.5	55	55	0 + 5.420
24.0	79	79	0 + 10.000
29.5	214	214	0 + 18.000
19.5	368	368	0 + 33.000
8.0	96	96	0 + 40.000
6.3	72	72	0 + 50.000
8.0	165	165	0 + 73.110
14.0	211	211	0 + 106.020
11.3	377	377	0 + 151.610
17.3	496	496	0 + 186.270
30.0	327	327	0 + 214.550
32.0	337	337	0 + 227.500
9.5	259	259	0 + 240.000
13.5	115	115	0 + 250.000
14.0	138	138	0 + 260.000
7.5	215	215	0 + 280.000
24.0	315	315	0 + 300.000
8.5	116	116	0 + 307.150
14.0	135	135	0 + 319.110
7.5	225	225	0 + 340.000
6.0	135	135	0 + 360.000
5.3	113	113	0 + 380.000
7.3	126	126	0 + 400.000
7.5	74	74	0 + 410.000
8.0	78	78	0 + 420.000
19.8	278	278	0 + 440.000
20.8	261	261	0 + 452.880
31.8	634	634	0 + 477.000
6.3	499	499	0 + 503.200
12.0	154	154	0 + 520.000
13.0	375	375	0 + 550.000
7.0	125	125	0 + 562.500
11.3	69	69	0 + 570.000
11.3	113	113	0 + 580.000
11.0	223	223	0 + 600.000
14.5	255	255	0 + 620.000
15.5	300	300	0 + 640.000
11.5	270	270	0 + 660.000
41.5	530	530	0 + 680.000
14.7	464	464	0 + 696.530
13.5	543	543	0 + 735.070
13.5	439	439	0 + 767.620
15.5	180	180	0 + 780.000
16.0	315	315	0 + 800.000
14.8	308	308	0 + 820.000
13.2	280	280	0 + 840.000
40.0	436	436	0 + 856.400
15.0	1,060	1,060	0 + 894.930
14.5	503	503	0 + 929.000
12.0	336	336	0 + 954.380
23.0	813	813	1 + 0.850
7.3	626	626	1 + 42.200
9.0	398	398	1 + 91.000
14.0	298	298	1 + 116.910
15.4	339	339	1 + 140.000
12.0	274	274	1 + 160.000
	16,938	16,938	

Length (m)	Area (m2)	Total Area (m2)	Station
12.0			1 + 160.000
21.0	606	606	1 + 196.720
9.0	1,220	1,220	1 + 278.040
11.0	371	371	1 + 315.120
11.0	322	322	1 + 344.420
9.7	299	299	1 + 373.290
5.4	51	51	1 + 380.000
7.0	124	124	1 + 400.000
9.0	160	160	1 + 420.000
5.3	143	143	1 + 440.000
5.5	38	38	1 + 447.070
55.5	1,084	1,084	1 + 482.620
13.5	748	748	1 + 504.300
10.5	375	375	1 + 535.530
13.0	404	404	1 + 569.900
23.0	275	275	1 + 585.200
			+
			+
			+
			+
			+
			+
			+
			+
			+
			+
			+
			+
			+
			+
			+
			+
			+
			+
			+
			+
			+
			+
			+
			+
			+
			+
			+
			+
			+
			+
			+
			+
			+
			+
			+
			+
			+
			+
			+
			+
			+
			+
			+
			+
	6,220	6,220	Sub Total
	23,157	23,157	Total

Quantity Calculation *7.1 Earthwork*

Access Road Name : El Guasmo Access Road

Station	Distance (m)	Earthwork														Slope Protection					Station
		Cut Volume							Embankment Volume				Balance A - B (m3)	Accumulated Volume (m3)	Lateral Volume (m3)	Left Side		Right Side		Total Area (m2)	
		Common (C=0.90)			Weathered Rock (C=1.10)			Total Corrected Cut Volume A (m3)	Embankment Section			Total Embankment Volume B (m3)									
		Sectional Area (m2)	Ground Volume (m3)	Corrected Volume (m3)	Sectional Area (m2)	Ground Volume (m3)	Corrected Volume (m3)		Sectional Area (m2)	Volume (m3)	Vary Volume (m3)					Slope Length (m)	Area (m2)	Slope Length (m)	Area (m2)		
0 + 0.000		0.0			0.0				10.4					0		0.0		4.5			0 + 0.000
0 + 5.420	5.420	0.0	0	0	0.0	0	0	0	22.4	89		89	-89	-89	0	0.0	0	5.1	26	26	0 + 5.420
0 + 10.000	4.580	0.0	0	0	0.0	0	0	0	40.4	144		144	-144	-233	0	8.0	18	13.0	41	60	0 + 10.000
0 + 18.000	8.000	0.0	0	0	0.0	0	0	0	121.9	649		649	-649	-882	0	9.4	70	17.8	123	193	0 + 18.000
0 + 33.000	15.000	0.0	0	0	0.0	0	0	0	50.6	1,294		1,294	-1,294	-2,176	0	11.2	155	5.4	174	329	0 + 33.000
0 + 40.000	7.000	0.0	0	0	0.0	0	0	0	6.0	198		198	-198	-2,374	0	1.5	44	2.1	26	71	0 + 40.000
0 + 50.000	10.000	1.2	6	5	0.0	0	0	5	0.3	32		32	-26	-2,400	5	0.6	11	0.4	13	23	0 + 50.000
0 + 73.110	23.110	2.4	42	37	0.0	0	0	37	1.0	15		15	22	-2,377	15	2.2	32	1.2	18	51	0 + 73.110
0 + 106.020	19.170	6.6	86	78	0.0	0	0	78	1.2	21		21	57	-2,321	21	4.0	59	4.6	56	115	0 + 106.020
0 + 151.610	45.590	3.0	219	197	0.0	0	0	197	2.0	73		73	124	-2,197	73	3.0	160	3.6	187	346	0 + 151.610
0 + 186.270	34.660	0.0	52	47	0.0	0	0	47	114.8	2,024		2,024	-1,977	-4,174	47	0.0	52	7.4	191	243	0 + 186.270
0 + 214.550	28.280	0.0	0	0	0.0	0	0	0	72.2	2,644		2,644	-2,644	-6,818	0	0.0	0	13.9	301	301	0 + 214.550
0 + 227.500	12.950	0.0	0	0	0.0	0	0	0	222.8	1,910		1,910	-1,910	-8,729	0	0.0	0	22.8	238	238	0 + 227.500
0 + 240.000	12.500	0.0	0	0	0.0	0	0	0	52.6	1,721		1,721	-1,721	-10,450	0	0.0	0	7.6	190	190	0 + 240.000
0 + 250.000	10.000	0.0	0	0	0.0	0	0	0	20.2	364		364	-364	-10,814	0	0.0	0	7.4	75	75	0 + 250.000
0 + 260.000	10.000	2.4	12	11	0.0	0	0	11	6.0	131		131	-120	-10,934	11	2.8	14	5.8	66	80	0 + 260.000
0 + 280.000	20.000	5.6	80	72	0.0	0	0	72	0.0	60		60	12	-10,922	60	2.3	51	0.0	58	109	0 + 280.000
0 + 300.000	20.000	1.3	69	62	0.0	0	0	62	14.8	148		148	-86	-11,008	62	1.3	36	17.9	179	215	0 + 300.000
0 + 307.150	7.150	10.8	43	39	0.0	0	0	39	0.0	53		53	-14	-11,022	39	4.2	20	0.0	64	84	0 + 307.150
0 + 319.110	11.960	0.0	65	58	0.0	0	0	58	14.2	85		85	-27	-11,049	58	0.0	25	6.5	39	64	0 + 319.110
0 + 340.000	20.890	8.4	88	79	0.0	0	0	79	0.0	148		148	-69	-11,118	79	2.3	24	0.0	68	92	0 + 340.000
0 + 360.000	20.000	3.6	120	108	0.0	0	0	108	0.0	0		0	108	-11,010	0	1.5	38	0.0	0	38	0 + 360.000
0 + 380.000	20.000	1.2	48	43	0.0	0	0	43	0.0	0		0	43	-10,967	0	0.3	18	0.0	0	18	0 + 380.000
0 + 400.000	20.000	4.8	60	54	0.0	0	0	54	0.0	0		0	54	-10,913	0	1.3	16	0.5	5	21	0 + 400.000
0 + 410.000	10.000	6.8	58	52	0.0	0	0	52	0.0	0		0	52	-10,861	0	1.6	15	0.6	6	20	0 + 410.000
0 + 420.000	10.000	10.4	86	77	0.0	0	0	77	0.0	0		0	77	-10,783	0	2.3	20	0.7	7	26	0 + 420.000
0 + 440.000	20.000	0.0	104	94	0.0	0	0	94	24.9	249		249	-155	-10,939	94	0.0	23	14.3	150	173	0 + 440.000
0 + 452.880	12.880	0.0	0	0	0.0	0	0	0	64.3	574		574	-574	-11,513	0	0.0	0	14.3	184	184	0 + 452.880
0 + 477.000	24.120	0.0	0	0	0.0	0	0	0	148.0	2,560		2,560	-2,560	-14,073	0	0.0	0	24.8	472	472	0 + 477.000
0 + 503.200	26.200	1.8	24	21	0.0	0	0	21	0.0	1,939		1,939	-1,918	-15,991	21	1.6	21	0.0	325	346	0 + 503.200
0 + 520.000	16.800	23.2	210	189	7.0	59	65	254	0.0	0		0	254	-15,737	0	4.3	50	2.7	23	72	0 + 520.000
0 + 550.000	30.000	25.8	735	662	18.0	375	413	1,074	0.0	0		0	1,074	-14,663	0	3.8	122	3.0	86	207	0 + 550.000
0 + 562.500	12.500	0.8	166	150	0.0	113	124	273	1.6	10		10	263	-14,400	10	1.0	30	0.0	19	49	0 + 562.500
0 + 570.000	7.500	14.4	57	51	0.8	3	3	55	0.0	6		6	49	-14,351	6	4.8	22	0.0	0	22	0 + 570.000
0 + 580.000	10.000	21.4	179	161	6.0	34	37	199	0.0	0		0	199	-14,153	0	4.4	46	1.8	9	55	0 + 580.000
0 + 600.000	20.000	21.2	426	383	1.2	72	79	463	0.0	0		0	463	-13,690	0	4.0	84	2.7	45	129	0 + 600.000
0 + 620.000	20.000	30.4	516	464	29.6	308	339	803	0.0	0		0	803	-12,887	0	3.5	75	3.4	61	136	0 + 620.000
0 + 640.000	20.000	29.6	600	540	18.4	480	528	1,068	0.0	0		0	1,068	-11,819	0	6.7	102	2.8	62	164	0 + 640.000
0 + 660.000	20.000	14.0	436	392	0.0	184	202	595	0.0	0		0	595	-11,224	0	6.3	130	0.0	28	158	0 + 660.000
0 + 680.000	20.000	8.4	224	202	1.0	10	11	213	29.6	296		296	-83	-11,308	213	7.2	135	28.8	288	423	0 + 680.000
0 + 696.530	16.530	22.2	253	228	28.2	241	265	493	0.0	245		245	248	-11,059	245	4.3	95	1.0	246	341	0 + 696.530
0 + 735.070	38.540	0.0	428	385	0.0	543	598	983	17.9	345		345	638	-10,421	345	0.0	83	8.4	181	264	0 + 735.070
0 + 767.620	32.550	28.2	459	413	24.8	404	444	857	0.0	291		291	566	-9,856	291	3.6	59	2.7	181	239	0 + 767.620
0 + 780.000	12.380	34.4	387	349	47.2	446	490	839	0.0	0		0	839	-9,017	0	3.7	45	2.5	32	77	0 + 780.000
0 + 800.000	20.000	35.6	700	630	44.8	920	1,012	1,642	0.0	0		0	1,642	-7,375	0	4.5	82	2.6	51	133	0 + 800.000
0 + 820.000	20.000	12.2	478	430	11.8	566	623	1,053	0.0	0		0	1,053	-6,322	0	5.0	95	0.0	26	121	0 + 820.000
0 + 840.000	20.000	24.8	370	333	13.6	254	279	612	0.0	0		0	612	-5,709	0	4.9	99	2.1	21	120	0 + 840.000
0 + 856.400	16.400	0.0	203	183	0.0	112	123	306	84.4	692		692	-386	-6,096	306	0.0	40	12.2	117	157	0 + 856.400
0 + 894.930	38.530	33.4	643	579	40.4	778	856	1,435	0.0	1,626		1,626	-191	-6,287	1,435	3.4	66	3.2	297	362	0 + 894.930
0 + 929.000	34.070	13.8	804	724	4.0	756	832	1,556	0.0	0		0	1,556	-4,731	0	5.3	148	0.0	55	203	0 + 929.000
0 + 954.380	25.380	23.4	472	425	2.0	76	84	509	0.0	0		0	509	-4,222	0	4.6	126	2.2	28	154	0 + 954.380
1 + 0.850	46.470	0.0	544	489	0.0	46	51	540	113.2	2,630		2,630	-2,090	-6,312	540	0.0	107	15.3	407	513	1 + 0.850
1 + 42.200	41.350	1.6	33	30	0.0	0	0	30	0.9	2359		2,359	-2,329	-8,641	30	0.9	19	1.4	345	364	1 + 42.200
1 + 91.000	48.800	7.6	224	202	2.0	49	54	256	0.0	22		22	234	-8,408	22	2.8	90	0.0	34	124	1 + 91.000
1 + 116.910	25.910	11.2	244	219	10.8	166	182	402	0.0	0		0	402	-8,006	0	4.5	95	0.0	0	95	1 + 116.910
1 + 140.000	23.090	23.6	402	362	14.6	299	323	684	0.0	0		0	684	-7,322	0	5.6	117	1.9	22	139	1 + 140.000
1 + 160.000	20.000	17.2	408	367	2.8	174	191	559	0.0	0		0	559	-6,763	0	5.6	112	0.8	27	139	1 + 160.000
Total	1,146.260		11,863	10,676		7,462	8,208	18,885		25,648		25,648	-6,763		4,028		3,191		5,970	9,161	

6-320

Station	Distance (m)	Earthwork														Slope Protection					Station
		Cut Volume							Embankment Volume							Left Side		Right Side			
		Common (C=0.90)			Weathered Rock (C=1.10)			Total	Embankment Section			Total	Balance	Accumulated	Lateral					Total	
		Sectional Area (m2)	Ground Volume (m3)	Corrected Volume (m3)	Sectional Area (m2)	Ground Volume (m3)	Corrected Volume (m3)	Corrected Cut Volume A (m3)	Sectional Area (m2)	Volume (m3)	Vary Volume (m3)	Embankment Volume B (m3)	A - B (m3)	Volume (m3)	Volume (m3)	Slope Length (m)	Area (m2)	Slope Length (m)	Area (m2)	Area (m2)	
1 + 160.000		17.2			2.8				0.0					-6,763		5.6		0.8			1 + 160.000
1 + 196.720	36.720	0.0	316	284	0.0	51	57	341	56.8	1,043		1,043	-702	-7,465	341	0.0	108	14.6	283	386	1 + 196.720
1 + 278.040	81.320	13.2	537	483	0.0	0	0	483	0.0	2,309		2,309	-1,826	-9,292	483	2.8	114	1.5	655	768	1 + 278.040
1 + 315.120	37.080	21.6	645	581	1.6	30	33	613	0.0	0		0	613	-8,678	0	4.5	135	2.1	67	202	1 + 315.120
1 + 344.420	29.300	20.4	615	554	1.2	41	45	599	0.0	0		0	599	-8,080	0	4.5	132	1.9	59	190	1 + 344.420
1 + 373.290	28.870	3.8	349	314	0.0	17	19	333	0.0	0		0	333	-7,746	0	1.2	82	0.0	27	110	1 + 373.290
1 + 380.000	6.710	1.6	18	16	0.0	0	0	16	0.0	0		0	16	-7,730	0	0.7	6	0.0	0	6	1 + 380.000
1 + 400.000	20.000	5.0	66	59	0.0	0	0	59	0.0	0		0	59	-7,670	0	1.2	19	0.6	6	25	1 + 400.000
1 + 420.000	20.000	11.6	166	149	0.0	0	0	149	0.0	0		0	149	-7,521	0	2.1	33	2.1	27	60	1 + 420.000
1 + 440.000	20.000	1.6	132	119	0.0	0	0	119	0.0	0		0	119	-7,402	0	0.0	21	0.4	25	46	1 + 440.000
1 + 447.070	7.070	2.4	14	13	0.0	0	0	13	0.0	0		0	13	-7,389	0	0.0	0	0.7	4	4	1 + 447.070
1 + 482.620	35.550	0.0	43	38	0.0	0	0	38	448.4	7,970		7,970	-7,932	-15,321	38	29.4	523	29.8	542	1,065	1 + 482.620
1 + 504.300	21.680	0.0	0	0	0.0	0	0	0	26.8	5,151		5,151	-5,151	-20,473	0	3.8	360	6.3	391	751	1 + 504.300
1 + 535.530	31.230	20.2	315	284	5.6	87	96	380	0.0	418		418	-38	-20,511	380	3.6	116	2.2	133	248	1 + 535.530
1 + 569.900	34.370	21.6	718	646	3.6	158	174	820	0.0	0		0	820	-19,691	0	4.6	141	3.0	89	230	1 + 569.900
1 + 585.200	15.300	37.4	451	406	43.8	368	399	805	0.0	0		0	805	-18,885	0	2.5	54	2.9	45	99	1 + 585.200
+																					+
+																					+
+																					+
+																					+
+																					+
+																					+
+																					+
+																					+
+																					+
+																					+
+																					+
+																					+
+																					+
+																					+
+																					+
+																					+
+																					+
+																					+
+																					+
+																					+
+																					+
+																					+
+																					+
+																					+
+																					+
+																					+
+																					+
+																					+
+																					+
+																					+
+																					+
+																					+
+																					+
+																					+
+																					+
+																					+
+																					+
+																					+
+																					+
+																					+
+																					+
+																					+
+																					+
+																					+
Sub Total	425.200		4,386	3,948		748	822	4,770		16,892		16,892	-12,122		1,242		1,839		2,358	4,191	Sub Total
Total	1,571.460		16,249	14,624		8,210	9,031	23,655		42,540		42,540	-18,885		5,270		5,030		8,322	13,353	Total

6-390

Working Division: 7 El Guasmo Access Road

Description	Calculation Details	Unit	Quantity	Remarks
7.5	Pavement			
101	Improved subgrade material			
	Cut section			
	$L = 1118.75 m$			
	Embankment section			
	$L = 452.71 m$			
	$V = 4.0 \times 0.075 \times 1118.75$			
	$+ 4.0 \times (0.35 + 0.2)/2 \times 452.71$			
	$= 833.6 m^3$			
		m^3	834	
102	Graded crushed stone subbase			
	$V = 4.0 \times 0.15 \times 1571.46 = 942.9 m^3$			
		m^3	943	
103	Transportation of improved subgrade material			
	$V = 833.6 \times 0.01 \times 10 km = 83$			
		$m^3 \cdot km$	83	

Working Division: 8 Membrillo Outlet Access Road

Description	Calculation Details	Unit	Quantity	Remarks
8.1	Earthwork			
101	Clearing			
	A = 5411			
		m^2	5411	
106	Compaction of original ground			
	A = 4.0 × 335.97 × 0.1 = 134.4			
		m^2	134	
108	Gabion for slope protection			
	Slope protection			
	V = 8nos × 25 = 200 m^3			

Quantity Calculation 8.1/01 Clearing

Access Road Name : Membrillo Outlet Access Road

Station	Distance (m)	Earthwork																			Station
		Cut Volume							Embankment Volume				Balance A - B (m3)	Accumlated Volume (m3)	Lateral Volume (m3)			Clearing		Total Area (m2)	
		Common (C=0.90)			Weathered Rock (C=1.10)			Total Corrected Cut Volume A (m3)	Embankment Section			Total Embankment Volume B (m3)				Length (m)	Area (m2)	Length (m)	Area (m2)		
		Sectional Area (m2)	Ground Volume (m3)	Corrected Volume (m3)	Sectional Area (m2)	Ground Volume (m3)	Corrected Volume (m3)		Sectional Area (m2)	Volume (m3)	Vary Volume (m3)										
0 + 0.000		35.6			60.4				0.0					0				18.0			0 + 0.000
0 + 32.000	32.000	19.6	883	795	0.8	979	1,077	1,872	0.0	0		0	1,872	1,872	0		0	10.0	448	448	0 + 32.000
0 + 50.000	18.000	0.0	176	159	0.0	7	8	167	480.4	4,324		4,324	-4,157	-2,285	167		0	54.7	582	582	0 + 50.000
0 + 62.000	12.000	9.6	58	52	0.0	0	0	52	0.0	2,882		2,882	-2,831	-5,115	52		0	6.5	367	367	0 + 62.000
0 + 72.000	10.000	21.6	156	140	14.4	72	79	220	0.0	0		0	220	-4,896	0		0	10.8	87	87	0 + 72.000
0 + 100.000	28.000	21.2	599	539	5.6	280	308	847	0.0	0		0	847	-4,049	0		0	13.5	340	340	0 + 100.000
0 + 130.000	30.000	6.4	414	373	4.5	152	167	539	0.0	0		0	539	-3,509	0		0	15.2	431	431	0 + 130.000
0 + 170.000	40.000	14.0	408	367	12.4	338	372	739	0.0	0		0	739	-2,770	0		0	14.2	588	588	0 + 170.000
0 + 200.000	30.000	14.8	432	389	2.4	222	244	633	0.0	0		0	633	-2,137	0		0	15.2	441	441	0 + 200.000
0 + 240.000	40.000	17.6	648	583	24.2	532	585	1,168	0.0	0		0	1,168	-969	0		0	16.0	624	624	0 + 240.000
0 + 270.000	30.000	14.4	480	432	8.4	489	538	970	0.0	0		0	970	1	0		0	12.3	425	425	0 + 270.000
0 + 305.000	35.000	19.2	588	529	9.6	315	347	876	0.0	0		0	876	877	0		0	13.7	455	455	0 + 305.000
0 + 330.000	25.000	12.8	400	360	15.4	313	344	704	0.0	0		0	704	1,580	0		0	13.5	340	340	0 + 330.000
0 + 345.000	15.000	10.0	171	154	16.8	242	266	420	0.0	0		0	420	2,000	0		0	11.3	186	186	0 + 345.000
0 + 353.968	8.968	18.8	129	116	1.2	81	89	205	0.0	0		0	205	2,205	0		0	10.5	98	98	0 + 353.968
+																					+
+																					+
+																					+
+																					+
+																					+
+																					+
+																					+
+																					+
+																					+
+																					+
+																					+
+																					+
+																					+
+																					+
+																					+
+																					+
+																					+
+																					+
+																					+
+																					+
+																					+
+																					+
+																					+
+																					+
+																					+
+																					+
+																					+
+																					+
+																					+
+																					+
+																					+
+																					+
+																					+
+																					+
+																					+
+																					+
+																					+
+																					+
+																					+
+																					+
+																					+
+																					+
Total	353.968		5,543	4,988		4,021	4,423	9,411		7,206		7,206	2,205		219		0		5,411	5,411	

Quantity Calculation 8.1 Earthwork

Access Road Name : Membrillo Outlet Access Road

Station	Distance (m)	Earthwork														Slope Protection					Station
		Cut Volume							Embankment Volume				Balance A - B (m3)	Accumulated Volume (m3)	Lateral Volume (m3)	Left Side		Right Side		Total Area (m2)	
		Common (C=0.90)			Weathered Rock (C=1.10)			Total Corrected Cut Volume A (m3)	Embankment Section			Total Embankment Volume B (m3)									
		Sectional Area (m2)	Ground Volume (m3)	Corrected Volume (m3)	Sectional Area (m2)	Ground Volume (m3)	Corrected Volume (m3)		Sectional Area (m2)	Volume (m3)	Vary Volume (m3)					Slope Length (m)	Area (m2)	Slope Length (m)	Area (m2)		
0 + 0.000		35.6			60.4				0.0					0		2.8		4.9			0 + 0.000
0 + 32.000	32.000	19.6	883	795	0.8	979	1,077	1,872	0.0	0		0	1,872	1,872	0	3.6	102	4.2	146	248	0 + 32.000
0 + 50.000	18.000	0.0	176	159	0.0	7	8	167	480.4	4,324		4,324	-4,157	-2,285	167	25.4	261	27.6	286	547	0 + 50.000
0 + 62.000	12.000	9.6	58	52	0.0	0	0	52	0.0	2,882		2,882	-2,831	-5,115	52	0.0	152	2.9	183	335	0 + 62.000
0 + 72.000	10.000	21.6	156	140	14.4	72	79	220	0.0	0		0	220	-4,896	0	3.2	16	1.0	20	36	0 + 72.000
0 + 100.000	28.000	21.2	599	539	5.6	280	308	847	0.0	0		0	847	-4,049	0	3.6	95	1.1	29	125	0 + 100.000
0 + 130.000	30.000	6.4	414	373	4.5	152	167	539	0.0	0		0	539	-3,509	0	12.2	237	0.0	17	254	0 + 130.000
0 + 170.000	40.000	14.0	408	367	12.4	338	372	739	0.0	0		0	739	-2,770	0	7.2	388	0.0	0	388	0 + 170.000
0 + 200.000	30.000	14.8	432	389	2.4	222	244	633	0.0	0		0	633	-2,137	0	2.0	138	0.0	0	138	0 + 200.000
0 + 240.000	40.000	17.6	648	583	24.2	532	585	1,168	0.0	0		0	1,168	-969	0	6.5	170	0.0	0	170	0 + 240.000
0 + 270.000	30.000	14.4	480	432	8.4	489	538	970	0.0	0		0	970	1	0	6.0	188	0.0	0	188	0 + 270.000
0 + 305.000	35.000	19.2	588	529	9.6	315	347	876	0.0	0		0	876	877	0	8.0	245	0.0	0	245	0 + 305.000
0 + 330.000	25.000	12.8	400	360	15.4	313	344	704	0.0	0		0	704	1,580	0	3.5	144	0.0	0	144	0 + 330.000
0 + 345.000	15.000	10.0	171	154	16.8	242	266	420	0.0	0		0	420	2,000	0	2.5	45	0.0	0	45	0 + 345.000
0 + 353.968	8.968	18.8	129	116	1.2	81	89	205	0.0	0		0	205	2,205	0	7.0	43	0.0	0	43	0 + 353.968
+																					+
+																					+
+																					+
+																					+
+																					+
+																					+
+																					+
+																					+
+																					+
+																					+
+																					+
+																					+
+																					+
+																					+
+																					+
+																					+
+																					+
+																					+
+																					+
+																					+
+																					+
+																					+
+																					+
+																					+
+																					+
+																					+
+																					+
+																					+
+																					+
+																					+
+																					+
+																					+
+																					+
+																					+
+																					+
+																					+
+																					+
+																					+
+																					+
+																					+
+																					+
+																					
Total	353.968		5,543	4,988		4,021	4,423	9,411		7,206		7,206	2,205		219		2,224		680	2,904	

Working Division: 8 Membrillo Outlet Access Road

Description	Calculation Details	Unit	Quantity	Remarks
8.5	Pavement			
101	Improved subgrade material			
	Cut section			
	$L = 335.97 m$			
	Embankment section			
	$L = 18.0 m$			
	$V = 4.0 \times 0.075 \times 335.97$			
	$+ 4.0 \times (0.35 + 0.2)/2 \times 18.0$			
	$= 120.6 m^3$			
		m^3	121	
102	Graded crushed stone subbase			
	$V = 4.0 \times 0.15 \times 353.97 = 212.38$			
		m^3	212	
103	Transportation of improved subgrade material			
	$V = 120.6 \times 0.01 \times 10 km = 12.1$			
		$m^3 \cdot km$	12	

Working Division: 8 Membrillo Outlet Access Road

Description	Calculation Details	Unit	Quantity	Remarks
8.6	Miscellaneous			
101	Guardrail (Bridge site only)			
	L = 10.0m × 2 × 2 = 40m			
		m	40	
102	Warning signs			
	N = 2			
		nos	2	

Working Division:

Description	Calculation Details	Unit	Quantity	Remarks
	Rio Membrillo			
Earth Work.				
	01) Open cut Excavation			
	Left			
	- 4.0 x 13.0 x 7.0 = 364.0			
	- 6.5 x 13.0 x 1/2 x 7.0 = 295.75			
	- 13.0 x 6.5 x 1/2 x 7.0 = 295.75			
	· 13 x 6.5 x 1/2 x 9.0 x 2 nos = 760.5			
	1716.00			
	Right.			
	· (2.0 + 12.0) x 9.5 x 1/2 x 7.0 = 465.5			
	- 13.0 x 6.0 x 1/2 x 7.0 = 273.0			
	· 2.0 x 1.0 x 1/2 x 7.0 = 7.0			
	· 13 x 6.5 x 1/2 x 7 x 2nos = 591.5			
	1337.00			
	Total 3053 m^3			
	03) Free Draining Backfill			
	11.0 x 7.0 x 0.4 x 2nos = 61.6 m^3			
	04) Gravel Bedding			
	9.8 x 7.0 x 0.2 x 2nos = 27.44 m^3			

Working Division:

Description	Calculation Details	Unit	Quantity	Remarks
	02) Backfill with Selected Material			
	$3053 - 61.6 - 452.06 = 2539.34$.			
	$4.5 \times 2.0 \times 1/2 \times 70 = 31.5$			
	$7.0 \times 3.5 \times 1/2 \times 1/3 \times 2$ nos $= 8.17$			
	$7.0 \times 6.5 \times 1/2 \times 70 = 159.25$			
	$7.0 \times 3.5 \times 1/2 \times 6.5 \times 1/3 \times 2$ nos $= 53.08$			
	Total 2791.34			

Working Division:

Description	Calculation Details	Unit	Quantity	Remarks
Earth Work				
	01) Open Cut Excavation			
	Left			
	(1.0+7.0) x 10.5 x 1/2 x 7.0 = 294.00			
	7.0 x 5.0 x 1/2 x 7.0 = 122.50			
	9.5 x 4.75 x 1/2 x 15.0 x 0.4 x 2 nos = 270.75			
	687.25			
	Right			
	11.0 x 14.0 x 1/2 x 7.0 = 539.00			
	14.0 x 7 x 1/2 x 18.5 x 1/3 x 2 nos = 604.33			
	1143.33			
	Total 1830.58 m^3			
	03) Free Draining Backfill			
	11.0 x 7.0 x 0.4 x 2 nos = 61.6 m^3			
	04) Gravel Bedding			
	9.8 x 7.0 x 0.2 x 2 nos = 27.44 m^3			

Working Division:

Description	Calculation Details	Unit	Quantity	Remarks
	02) Backfill with Selected Material			
	1830.58 - 61.6 - 452.06 = 1316.92			
	9.5 x 15.5 x 1/2 x 7.0 = 515.38			
	3.0 x 3.0 x 1/2 x 7.0 = 31.50			
	11.0 x 1.0 x 1/2 x 7.0 = 38.50			
	8.0 x 13.0 x 1/2 x 7.0 = 364.00			
	9.5 x 4.75 x 1/2 x 19.5 x 1/3 x 2nos = 293.31			
	8.5 x 4.25 x 1/2 x 13.5 x 1/3 x 2nos = 162.56			
	Total 2722.17 m^3			
	Gabion			
	21.5 x (7+6x2) = 408.5			
	17.5 x (7+6x2) = 332.5			
	Total 741.0 m^3			

E 2

Working Division:

Description	Calculation Details	Unit	Quantity	Remarks
	02) Back fill with Selected Material			
	- $1271.14 - 61.6 - 452.06 = 757.48$			
	- $9.2 \times 16.0 \times 7.0 \times 1/2 = 515.2$			
	- $9.2 \times 6.0 \times 1/2 \times 16 \times 1/3 \times 2_{nos} = 294.4$			
	- $7.5 \times 1.0 \times 1/2 \times 7.0 = 26.25$			
	- $8.5 \times 12.0 \times 1/2 \times 7.0 = 357.00$			
	- $8.5 \times 6.0 \times 1/2 \times 12 \times 1/3 \times 2_{nos} = 204$			
	- $12.0 \times 1.5 \times 1/2 \times 7.0 = 63$			
	Total 2217.33 m^3			
	Gabion			
	. $13.5 \times (7 + 6 \times 2) = 256.5$			
	. $14.5 \times (7 + 6 \times 2) = 275.5$			
	Total 532.00 m^3			

Working Division: 6.2 CONGUILLO

Description	Calculation Details	Unit	Quantity	Remarks
.2				
/05		m^3	593	
/06		m^3	131	
/07		m^3	210	
/08		m^3	16	
.3				
/01		m^3	6629	
/02		m^3	2649	
/03		m^3	415	
/04		m	1,807	
/05		m	129	
/06		m	101	
/07		m	10662	
/08		m^3	2212	
/09		m^3	1093	
/10		m^3	3386	
/11		m^3	35	
/12		m^2	3947	
/13		m^2	27,795	
/14		tm	74	
/15		m^3	391	
/16		m^2	0	
/17		m^2	0	

Working Division:

Description	Calculation Details	Unit	Quantity	Remarks
4				
103		m^3	361	
104		m^3	32	
106		m^2	550	
108		m^2	644	
109		ton	30	
110		m^2	8	
112		m^2	0	

Working Division: 6.2. CONGUILLO (I)

Description	Calculation Details	Unit	Quantity	Remarks
11.2.	Box culverts			
105	Open-cut excavation.	m^3	592.50	
106	Backfill with selected material	m^3	130.75	
107	Free draining backfill	m^3	209.2	
108	Gravel bedding	m^3	16.0	

Working Division: 6. CONGUILLO ACCESS ROAD (I)

Description	Calculation Details	Unit	Quantity	Remarks
3	CULVERT AND DRAINAGE WORKS			
101	Open-cut excavation, all classes	m^3	2852.766	
	1. Pipe culvert 728.67			
	2. Box culvert			
	3. Drain pipe 1146.768			
	4. Catch basin 977.328			
	Total 2852.766			
102	Backfill with selected material	m^3	1194.53	
	1. Pipe culvert 328.61			
	2. Box culvert			
	3. Catch basin 865.92			
	Total 1194.53			
103	Crushed stone bedding	m^3	130.470	
	1. Pipe culvert			

Working Division:

Description	Calculation Details	Unit	Quantity	Remarks
.3	CULVERT AND DRAINAGE WORKS			
/04	Reinforced concrete pipe, D.600 mm Culvert : 292.5 m, For ditch 330 m	m	622.500	
/05	Reinforced concrete pipe, D.800 mm	m	40.0	
/06	Reinforced concrete pipe, D.1,000 mm	m	50.0	
/07	P.V.C. perforated drain pipe D.200 mm	m	4778.2	
/08	Free drainage material for subdrain	m^3	996.733	
/09	Concrete, class E. for pipe culvert and wing walls	m^3	337.156	
	1. Pipe culvert 264.58			
	2. Box culvert			
	3. Wing wall for pipe culvert 48.430			
	4. Wing wall for box culvert 24.146			
	Total 337.156			
/10	Concrete, class F. for side ditch and catch basin	m^3	1574.844	
	1. Side ditch 1513.398			
	2. catch basin 61.446			
	Total 1574.844			

Working Division:

Description	Calculation Details	Unit	Quantity	Remarks
3	CULVERT AND DRAINAGE WORKS			
/11	Concrete, class H, for levelling concrete.	m^3	17.833	
	1. Culvert			
	2. Wing wall. 12.058			
	3. Catch basin 5.775			
	Total 17.833			
/12	Form work, F1 finish, for concrete of Items /09 and /10.	m^2	1392.403	
	1. culvert 778.96			
	2. Wing wall 270.408			
	3. Catch basin 343.035			
	Total 1392.403			
/13	Formwork, F3 finish, for concrete of Items /09 and /10.	m^2	12910.13	
	1. Culvert			
	2. Wing wall. 119.205			
	3. Catch basin. 208.461			
	4. Drain ditch 12582.464			
	Total 12910.13			

Working Division:

Description	Calculation Details	Unit	Quantity	Remarks
3.	CULVERT AND DRAINAGE WORKS			
1.4	Reinforcing bars for concrete works	ton	22	
	1. Culvert 10930.94			
	2 Wing wall 5806.08			
	3 Catch basin 4915.68			
	Total 21652.7			
1.5	Gabion mattress, t=500 mm	m^3	174.02	
1.6	Joint filler, t=10 mm	m^2	0	
1.7	Bituminous coating for contraction joint	m^2	0	

Working Division: 4

Description	Calculation Details	Unit	Quantity	Remarks
H 4	CONCRETE WORKS			
/03	Concrete class E for box culverts	m^3	361.0	
/04	Concrete class H for levelling concrete	m^3	32.0	
/06	Formwork F1 finish for concrete item /03, /04	m^2	550.00	
/08	Formwork F3 finish for concrete item /03	m^2	643.12	
/09	Reinforcing bars for concrete works	Ton	32	
/10	Joint filler for culvert	m^2	8	
/12	Bituminous coating for contraction joint	m^2	0	

CONGUILLO (I)

Dr. No	St No.	Q m3/s	I	Entrance El m	Exit El m	Road El m	Culvert Length m	Type	Soil Thickness m
D-1	0+522.00	67.06	13.5%	129.200	126.500	131.000	20.000	Over 2.5×2.0 (I)	#VALUE!
D-2	1+980.00	1.11	23.0%	254.800	250.200	254.400	20.000	D=600mm A	1.300
D-3	3+784.00	0.44	33.3%	393.000	388.000	394.000	15.000	D=600mm A	2.900
D-4	3+852.00	0.11	31.3%	393.000	388.000	394.000	16.000	D=600mm A	2.900
D-5	4+070.00	0.33	10.0%	414.000	413.000	415.000	10.000	D=600mm A	0.900
D-6	4+334.00	0.67	7.1%	425.000	424.000	430.000	14.000	D=600mm B	4.900
D-7	4+400.00	0.67	32.1%	428.000	419.000	429.400	28.000	D=600mm C	5.300
D-8	4+904.00	0.89	26.0%	433.000	420.000	440.000	50.000	D=600mm C	12.900
D-9	6+712.00	1.56	28.0%	305.000	298.000	307.000	25.000	D=600mm B	4.900
D-10	7+768.00	3.22	10.0%	200.000	198.000	205.000	20.000	D=800mm C	5.200
D-11	7+930.00	2.55	6.7%	210.000	209.000	212.000	15.000	D=800mm A	1.700
D-12	8+610.00	1.56	19.2%	169.000	164.000	172.000	26.000	D=600mm B	4.900
D-13	9+062.00	0.11	14.0%	156.000	152.500	159.795	25.000	D=600mm B	4.945
D-14	9+647.00	4.44	10.0%	115.000	110.000	123.724	50.000	D=1000mm C	10.224
D-15	9+947.00	1.33	13.6%	113.500	110.500	114.528	22.000	D=600mm A	1.928
D-16	10+093.00	2.22	53.3%	115.000	107.000	120.359	15.000	D=600mm C	8.759
D-17	10+813.00	1.00	15.1%	85.000	81.000	89.664	26.500	D=600mm C	6.064

ø600
33 m × 10
= 330 m

		ⓝ	ⓛ
ø600	A	5	83
	B	4	90
	C	4	119.5
ø800	A	1	15
	B	0	0
	C	1	25
ø1,000	A	0	0
	B	0	0
	C	1	50

	n	l
2.5×2.0 (I)	1	20×5

6-410

1. Conguillo (I)

		Length	Pipe Length	Open Cut Excavation (12.3/01)		Backfill (12.3/02)		Crushed Stone Bedding (12.3 /03)		Pipe D=600 (12.3/04)	Pipe D=800 (12.3/05)	Pipe D=1000 (12.3/06)	Concrete Class E (12.3/09)		Form Work F1 (12.3/12)		Reinforced Bar (12.3/14)	
		Unit(m)	Unit(m)	Unit (m3)	Total	Unit (m3)	Total	Unit (m3)	Total	Unit (m)	Unit (m)	Unit (m)	Unit (m3)	Total	Unit (m2)	Total	Unit (kg)	Total
D=600mm	90	413.0	622.5	0.83	342.27	0.43	177.85	0.14	58.85				0.16	64.55	0.52	214.76	0.00	0.00
	180	90.0		0.93	83.36	0.42	37.41	0.17	14.85				0.26	23.18	1.00	90.00	0.00	0.00
	Fix	119.5		1.09	129.66	0.45	54.07	0.24	28.68				0.62	73.52	2.00	239.00	42.98	5,136.59
D=800mm	90	15.0	40.0	1.28	19.19	0.58	8.67	0.17	2.59				0.26	3.88	0.68	10.20	0.00	0.00
	180	0.0		1.48	0.00	0.56	0.00	0.21	0.00				0.46	0.00	1.34	0.00	0.00	0.00
	Fix	25.0		1.72	42.96	0.60	15.11	0.31	7.70				1.11	27.84	2.68	67.00	73.53	1,838.25
D=1000mm	90	0.0	50.0	1.90	0.00	0.73	0.00	0.28	0.00				0.35	0.00	0.76	0.00	0.00	0.00
	180	0.0		2.12	0.00	0.72	0.00	0.33	0.00				0.60	0.00	1.58	0.00	0.00	0.00
	Fix	50.0		2.22	111.23	0.71	35.51	0.36	17.80				1.43	71.62	3.16	158.00	84.55	4,227.30
Total		712.5			728.67		328.61		130.47	622.50	40.00	50.00		264.58		778.96		11,202.14

		Length	Open Cut Excavation (12.2/07)		Backfill (12.2/06)		Concrete Class E (Item12.4/03)		Concrete Class H (Item12.4/04)		Form Work F1 (Item12.4/06)		Form Work F3 (Item12.4/08)		Reinforced Bar (12.4/09)	
		Unit (m)	Unit (m3)	Total	Unit (m3)	Total	Unit (m3)	Total	Unit (m3)	Total	Unit (m2)	Total	Unit (m2)	Total	Unit (kg)	Total
1200mm x 1200mm	~9.25	0.0	2.42	0.00	0.77	0.00	1.63	0.00	0.19	0.00	3.60	0.00	3.70	0.00	162.91	0.00
1500mm x 1500mm	~9.5	0.0	3.36	0.00	0.96	0.00	2.31	0.00	0.22	0.00	4.30	0.00	4.45	0.00	193.31	0.00
2000mm x 2000mm	~5.75	0.0	4.97	0.00	1.25	0.00	2.94	0.00	0.27	0.00	5.30	0.00	5.95	0.00	232.36	0.00
2000mm x 2000mm	~7.75	0.0	5.18	0.00	1.31	0.00	3.20	0.00	0.27	0.00	5.50	0.00	5.95	0.00	236.02	0.00
2000mm x 2000mm	7.751~	0.0	5.54	0.00	1.37	0.00	3.74	0.00	0.28	0.00	5.70	0.00	5.95	0.00	270.47	0.00
2500mm x 2000mm	3.75~5.75	100.0	5.93	592.50	1.31	130.75	3.61	~~592.50~~ 361	0.32	32.00	5.50	550.00	6.43	643.12	317.29	31,728.80
2500mm x 2000mm	5.751~	0.0	6.32	0.00	1.37	0.00	4.20	0.00	0.32	0.00	5.70	0.00	6.43	0.00	331.62	0.00
Total		100.0		592.50		130.75		~~592.50~~ 361.0		32.00		550.00		643.12		31,728.80

1994/12/166:45 PMcongillo ditch

Distance (m)			Left	Right
0.000	~	140.000	0.000	140.000
140.000	~	175.720	35.720	35.720
175.720	~	220.000	0.000	44.280
220.000	~	271.330	51.330	51.330
271.330	~	361.460	0.000	90.130
361.460	~	418.480	57.020	0.000
426.000	~	506.780	0.000	80.780
506.780	~	600.780	94.000	94.000
600.780	~	660.780	60.000	0.000
660.780	~	780.000	119.220	119.220
780.000	~	907.970	127.970	0.000
1,010.420	~	1,042.410	31.990	31.990
1,042.410	~	1,080.000	37.590	0.000
1,080.000	~	1,098.870	18.870	18.870
1,098.870	~	1,300.000	201.130	0.000
1,587.560	~	1,664.640	77.080	0.000
1,664.640	~	1,700.000	35.360	35.360
1,700.000	~	1,800.000	100.000	0.000
1,800.000	~	1,860.000	60.000	60.000
1,860.000	~	1,880.000	20.000	0.000
1,880.000	~	1,898.120	18.120	18.120
1,898.120	~	1,990.340	92.220	0.000
			1,237.620	819.800

1994/12/166:43 PMcongillo ditch

Distance (m)			Left	Right
50	~	300	250	250
500	~	550	50	50
600	~	650	50	50
650	~	700	50	0
700	~	750	50	50
750	~	800	50	0
800	~	850	50	50
850	~	1,100	250	0
1,100	~	1,250	150	150
1,250	~	1,300	50	0
1,300	~	1,600	300	300
1,600	~	1,800	200	0
1,800	~	2,000	200	200
2,050	~	2,100	0	50
2,250	~	2,300	0	50
2,300	~	2,350	50	50
2,350	~	2,550	0	200
2,600	~	2,650	0	50
2,650	~	2,750	100	100
2,750	~	2,850	100	0
2,850	~	2,950	100	100
2,950	~	3,000	50	0
3,000	~	3,050	50	50
3,050	~	3,150	100	0
3,150	~	3,500	350	350
3,500	~	3,550	0	50
3,550	~	3,700	150	150
3,700	~	3,750	50	0
3,750	~	3,850	100	100
3,850	~	3,950	100	100
4,150	~	4,400	250	250
4,450	~	4,500	50	50
4,500	~	4,550	50	0
4,550	~	4,650	100	100
4,650	~	4,700	50	0
5,000	~	5,050	50	50
5,050	~	5,100	0	50
5,100	~	5,150	50	0
5,250	~	5,400	0	150
5,400	~	5,500	100	100
5,500	~	5,550	0	50
5,550	~	5,600	50	50
5,600	~	5,700	0	100
5,700	~	5,800	100	0
5,800	~	5,900	0	100

5,900	~	5,950	50	0
5,950	~	6,000	50	0
6,050	~	6,100	0	50
6,100	~	6,150	50	0
6,150	~	6,300	0	150
6,300	~	6,400	100	100
6,450	~	6,650	200	0
6,750	~	6,800	50	0
6,850	~	6,900	0	50
6,900	~	7,050	150	150
7,150	~	7,200	0	50
7,200	~	7,300	100	100
7,300	~	7,350	0	50
7,450	~	7,500	50	50
7,500	~	7,750	0	250
7,850	~	7,900	0	50
7,950	~	8,000	50	50
8,000	~	8,100	100	100
8,100	~	8,150	0	50
8,150	~	8,200	0	50
8,250	~	8,400	150	150
8,400	~	8,600	0	200
8,650	~	8,700	0	50
8,700	~	8,750	50	0
8,750	~	8,950	0	200
		Total	5000	5450
			1,237.620	819.800
			6237.62	6269.8

12507.42

Drain Pipe Quantities

Access Road Name	Length (m)	Excavation (m3)		P.V.C Pipe D=200mm (m)		Drainage Material (m3)	
		Per meter	Total		Total	Per meter	Total
Conguillo (I)	4,778.200	0.240	1,146.768		4,778.200	0.209	996.733
Conguillo (II)	5,823.120	0.240	1,397.549		5,823.120	0.209	1,214.703
Severno Tramo1	1,535.870	0.240	368.609		1,535.870	0.209	320.382
Severno Tramo2	2,472.920	0.240	593.501		2,472.920	0.209	515.851
Los Cuyuyes	7,324.030	0.240	1,757.767		7,324.030	0.209	1,527.793
Poza Honda	266.710	0.240	64.010		266.710	0.209	55.636
La Seca	2,035.376	0.240	488.490		2,035.376	0.209	424.579
El Guasmo	786.460	0.240	188.750		786.460	0.209	164.056
Cana Dulce	1,200.560	0.240	288.134		1,200.560	0.209	250.437
Membrillo Outlet	30.000	0.240	7.200		30.000	0.209	6.258
Grand Total			5,154.011		21,475.046		4,479.695

Excavation V=(0.8+0.4)*0.4/2 =0.24

Free Drainage Material V=0.24-3.14*0.1^2 =0.21

Description	Calculation Details	Unit	Quantity	Remarks
.3 101	Open-cut excavation, all classes (Catch basin)			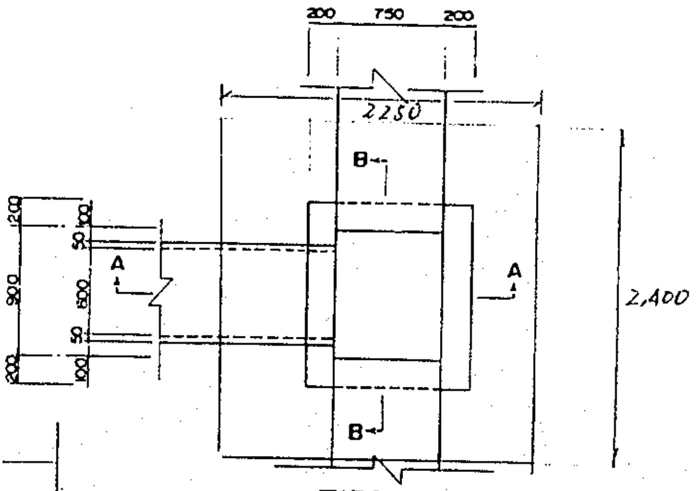 200 750 200 2250 B B A A 2,400 200 900 200 100 50 600 50 100TIPO-A ESCALA B TYPE-A SCALE B 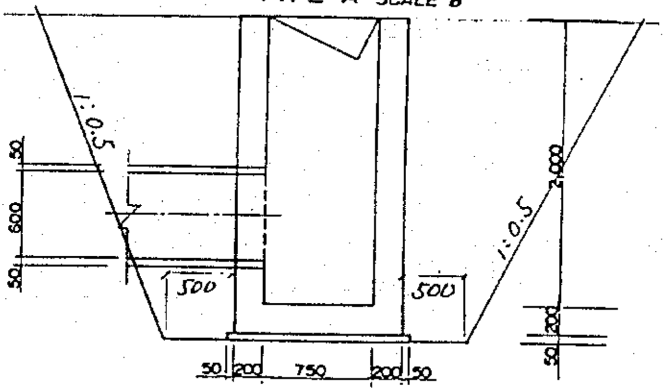 1:0.5 1:0.5 2,000 500 500 50 600 50 200 50 50 200 750 200 50SECCION A-A SECTION A-A
	$2.25 \times 2.4\,m = 3.4\,m^2$			
	$4.5 \times 4.65\,m = 20.925\,m^2$			
	$(5.4 + 20.925) \times 1/2 \times 2.25 = \underline{29.616\,m^3}$			
	29.616 × 33 nos = 977.328	m^3	977.328	

Working Division:

Description	Calculation Details	Unit	Quantity	Remarks
3 102	Backfill with selected material			
	< catch basin >			
	$29.616 - 1.15 \times 1.3 \times 2.2 - 1.25 \times 1.4 \times 0.05$			
	$= 26.240$			
	26.240×33 nos $= 865.92$	m^3	865.920	

Working Division:

Description	Calculation Details	Unit	Quantity	Remarks
3 109	concrete class E for (wing wall) ⟨pipe type⟩			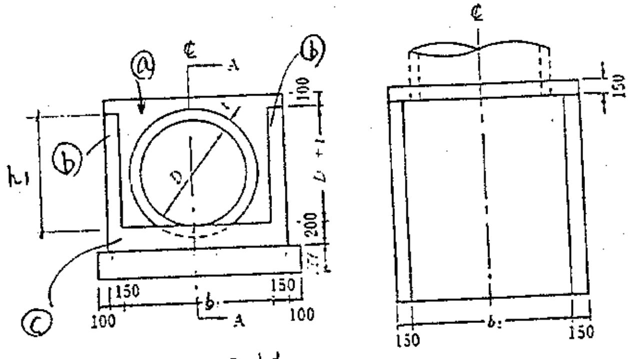 ⓐ ⓑ ⓒ ℄ A h1 D 100 D + t 200 150 b 100 150 b1 Inlet 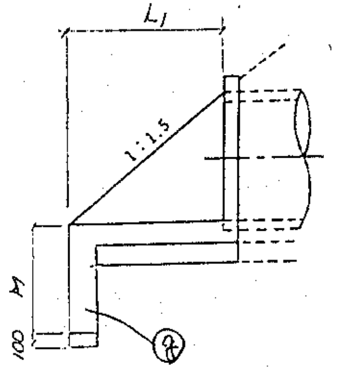 D | b (mm) D 400 | 600 D 450 | 650 D 500 | 700 D 600 | 800 D 700 | 900 D 800 | 1,000 D 900 | 1,100
	1. ø 600 (h1 = 650 mm, b = 800 mm) (L1 = 975 mm, h2 = 700 mm) L2 = 1.05 M = 400 mm			
	ⓐ 1.1 × 0.95 × 0.15 m = 0.157 m³ ⓑ 0.975 × 0.65 × 0.15 × ½ × 2 = 0.095 m³ ⓒ 1.7 × 0.975 × 0.2 = 0.215 m³			
	ⓓ 1.1 × 1.0 × 0.15 m = 0.165 m³ ⓔ 1.05 × 0.7 × ½ × 0.15 × 2 = 0.110 m³ ⓕ 1.1 × 1.05 × 0.2 m = 0.231 m³			
	ⓖ 0.3 × 0.4 × 1.1 m × 2 = 0.264 m³			
	1.237 m³			
	1.237 × 13 = 16.081 0.77 × 33 = 25.41	m³	41.491	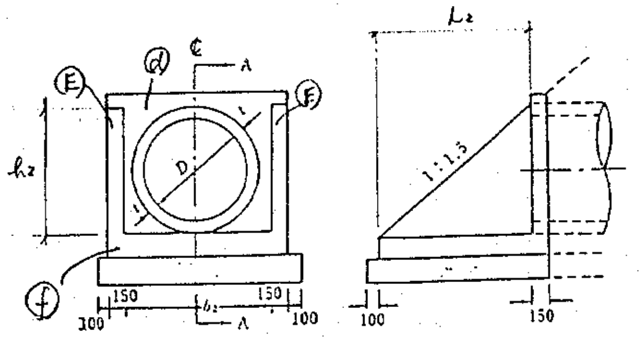 ⓓ Ⓔ Ⓕ ⓕ ℄ A D h2 150 b2 100 L2 1:1.5 Outlet

6-48

Working Division:

Description	Calculation Details	Unit	Quantity
3 109.	2. φ800. h_1 = 0.866m L_1 = 1.299 m		
	b = 1.0m , h_2 = 0.932 , L_2 = 1.398 m		
	M = 0.6 m.		
	ⓐ: 1.3 × 1.166 × 0.15 = 0.227 m^3.		
	ⓑ: 0.866 × 1.299 × ½ × 0.15 × 2 = 0.169 m^3		
	ⓒ: 1.3 × 1.299 × 0.2 = 0.338 m^3.		
	ⓓ: 1.3 × 1.232 × 0.15 = 0.240 m^3.		
	ⓔ: 0.932 × 1.398 × ½ × 0.15 × 2 = 0.195 m^3		
	ⓕ: 1.3 × 1.398 × 0.2 = 0.363 m^3.		
	ⓖ: 0.3 × 0.6 × 1.3 × 2 = 0.468 m^3		
	2.0 m^3.		
	2.0 × 2 = 4.0	m^3	4.0

Remarks

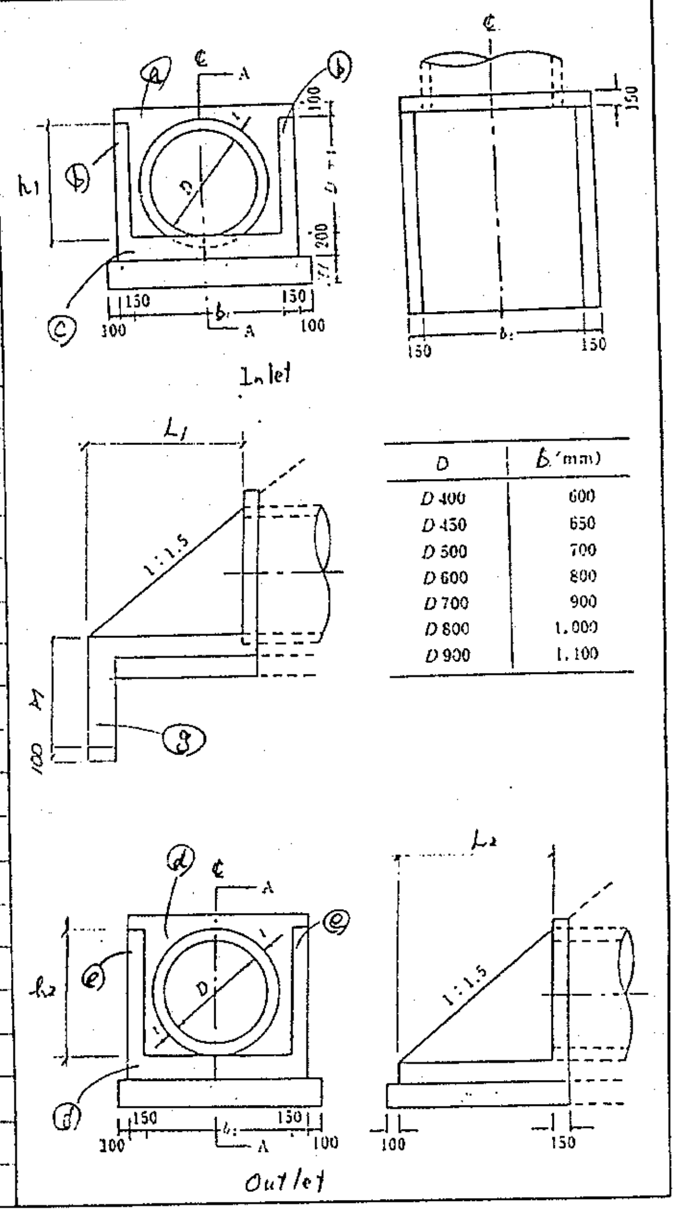
ⓐ
℄
A
ⓑ
100
D + 1
200
h1
ⓑ
ⓒ
150
150
100
b1
A
100
℄
150
150
b1
150
Inlet
L1
1:1.5
ⓖ
H
100
ⓓ
℄
A
ⓔ
ⓔ
h2
D
ⓕ
150
150
100
b1
A
100
L2
1:1.5
100
150
Outlet

D	b (mm)
D 400	600
D 450	650
D 500	700
D 600	800
D 700	900
D 800	1,000
D 900	1,100

Working Division:

Description	Calculation Details	Unit	Quantity	Remarks
3 1.09	3. Ø1,000 wing wall			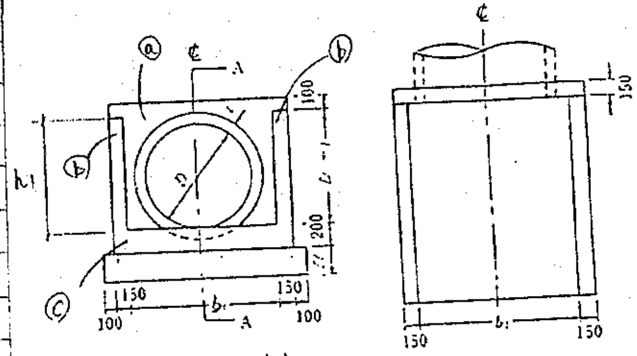 Inlet 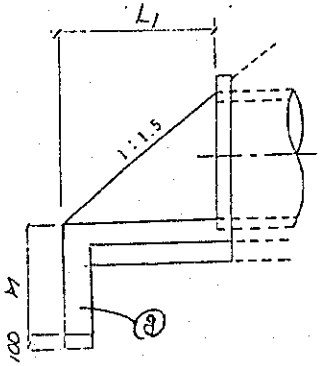 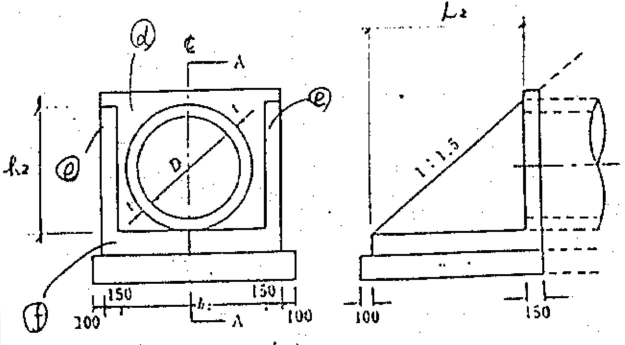 Outlet
	h_1 = 1.082m L_1 = 1.623 m, b = 1.2m			
	h_2 = 1.164m L_2 = 1.746 m			
	M = 0.8 m			
	ⓐ: 1.5 × 1.382 × 0.15 = 0.311 m^3			
	ⓑ: 1.082 × 1.623 × ½ × 0.15 × 2 = 0.263 m^3			
	ⓒ: 1.5 × 1.623 × 0.2 = 0.487 m^3			
	ⓓ: 1.5 × 1.469 × 0.15 = 0.339 m^3			
	ⓔ: 1.164 × 1.746 × ½ × 0.15 × 2 = 0.305 m^3			
	ⓕ: 1.5 × 1.746 × 0.2 = 0.524 m^3			
	ⓖ: 0.3 × 0.8 × 1.5 × 2 = 0.720 m^3			
	2.939 m^3			
	2.939 × 1 = 2.939	m^3	2.939	

D	b (mm)
D 400	600
D 450	650
D 500	700
D 600	800
D 700	900
D 800	1,000
D 900	1,100

Working Division:

Description	Calculation Details	Unit	Quantity	Remarks
3 109	Concrete class E			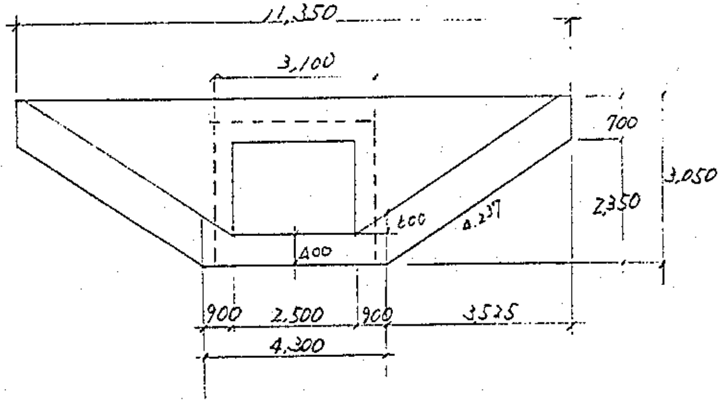 11,350 3,100 700 3,050 2,350 600 4,237 400 900 2,500 900 3,525 4,300 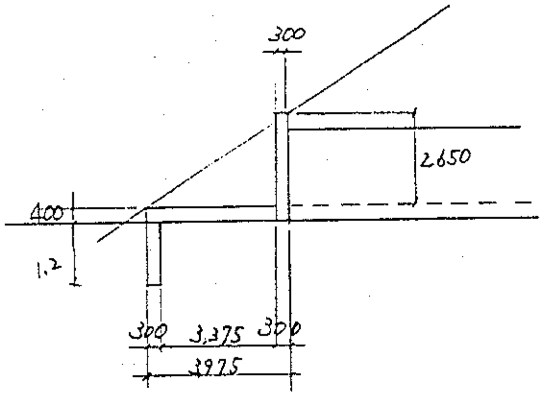 300 2,650 400 1.2 300 3,375 300 3975
	(wing wall)			
	6. 2.5×2.0 m (I)			
	(Wing)			
	{(11.35+4.3)×2.35×½ + 0.7×11.35			
	−2.0×2.5}×0.3			
	= 6.400			
	(slab)			
	3.1×3.675×0.4 = 4.557			
	0.3×1.2×3.1 = 1.116			
	12.073 m³			
	12.073×2 = 24.146	m³	24.146	

Working Division:

Description	Calculation Details	Unit	Quantity
3 1/10	Concrete, class F for side ditch and catch basin		
	(catch basin) per 1 no.		
	$1.15 \times 1.30 \times 2.2$		
	$- 0.75 \times 0.9 \times 2.0 = 1.939\ m^3$		
	$1.939 - 0.35^2\pi \times 0.2 = \underline{1.862\ m^3}$		
	$1.862 \times 33 = 61.446$	m^3	61.446

Remarks

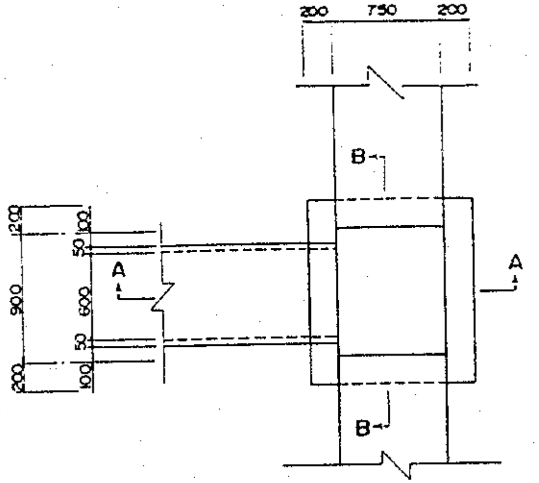
200
750
200
B
A
A
B
1200
900
200
100
50
600
50
100

TIPO-A ESCALA B
TYPE-A SCALE B

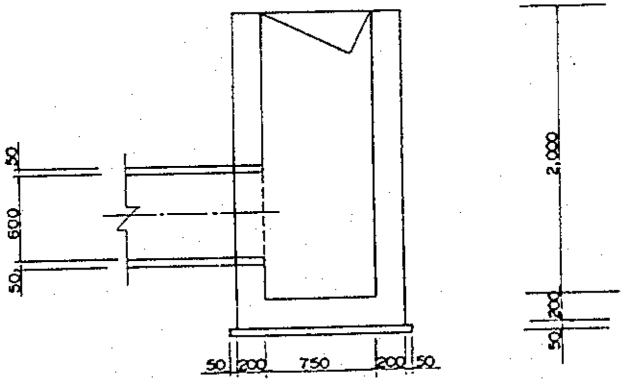
50
600
50
2,000
200
50
50
200
750
200
50

SECCION A-A
SECTION A-A

Working Division:

Description	Calculation Details	Unit	Quantity	Remarks
3 110	Concrete class F for side ditch and catch basin			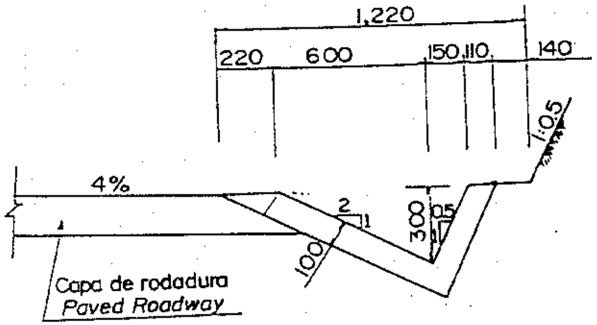
	(Side ditch) per 1 m			
	1.08 × 0.432 × 1/2			
	− 0.75 × 0.3 × 1/2 = 0.121 m³			
	0.121 × 12507.42 = 1513.398	m³	1,513 398	

1,220
220
600
150
110
140
1:0.5
4%
2
1
308
0.5
3
1
100
Capa de rodadura
Paved Roadway

Working Division:

Description	Calculation Details	Unit	Quantity	Remarks
3 111	Concrete, class H for levelling concrete			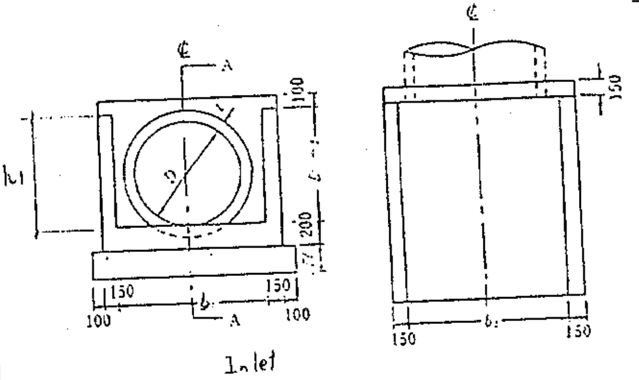 Inlet 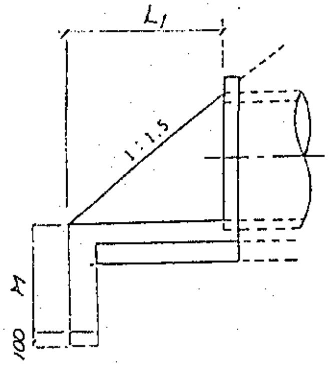 D | b (mm) D 400 | 600 D 450 | 650 D 500 | 700 D 600 | 800 D 700 | 900 D 800 | 1,000 D 900 | 1,100 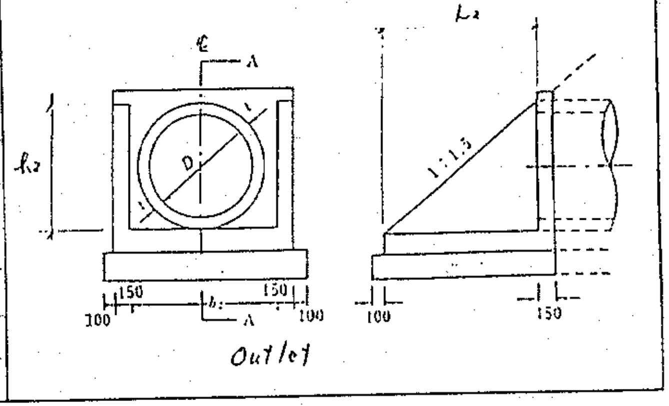 Outlet
	1. Ø600 pipe (wing wall)			
	1.1m × 1.125 × 0.1 = 0.124 m³			
	1.1 × 1.20 × 0.1 = 0.132 m³			
	0.256 m³			
	0.256 × 13 + 0.132 × 33 = 7.684	m³	7.684	
	2. Ø800 pipe			
	1.3 × 1.449 × 0.1 = 0.189 m³			
	1.3 × 1.548 × 0.1 = 0.201 m³			
	0.390 m³			
	0.390 × 2 = 0.78	m³	0.78	
	3. Ø1,000 pipe			
	1.5 × 1.773 × 0.1 = 0.266 m³			
	1.5 × 1.896 × 0.1 = 0.284 m³			
	0.550 m³			
	0.55 × 1 =	m³	0.55	

℄
A
100
b
200
h1
150
150
100
100
A
D
150
b
150
L1
1:1.5
100
h
L2
1:1.5
h2
D
150
150
100
100
b
A