APPENDIX

APPENDIX 3

Table of Contents

Figure 3.1 Projected Daily Load Variation Curve in 2010 ---------- 3 - 1

Figure 3.2 Daily Load Variation Curve for Muscat System in 1993 ---------- 3 - 2

Figure 3.3 System Diagram of Power and Desalination Plant ---------- 3 - 5

Table 3.1 Daily Load Variation for Muscat System in 1993 ---------- 3 - 2

Table 3.3 Existing Power Stations of Muscat System ---------- 3 - 3

Table 3.4 Existing Power Station of Wadi Jizzi System ---------- 3 - 3

Table 3.5 Assumed Operation Life of Existing Power Plant Unit ---------- 3 - 4

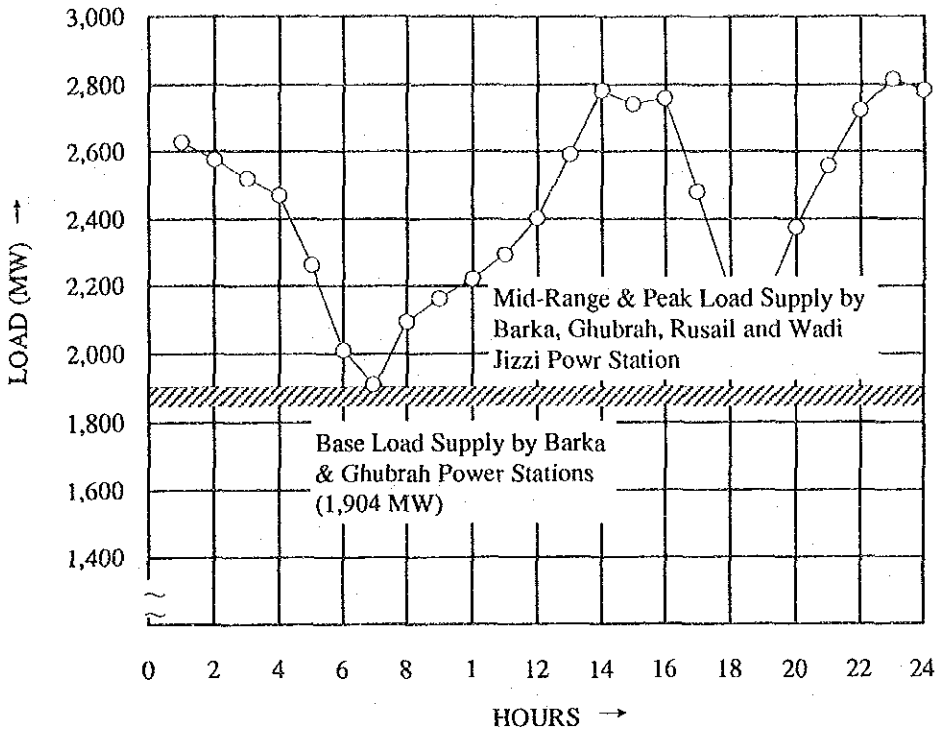

(a) MAXIMUM LOAD DAY

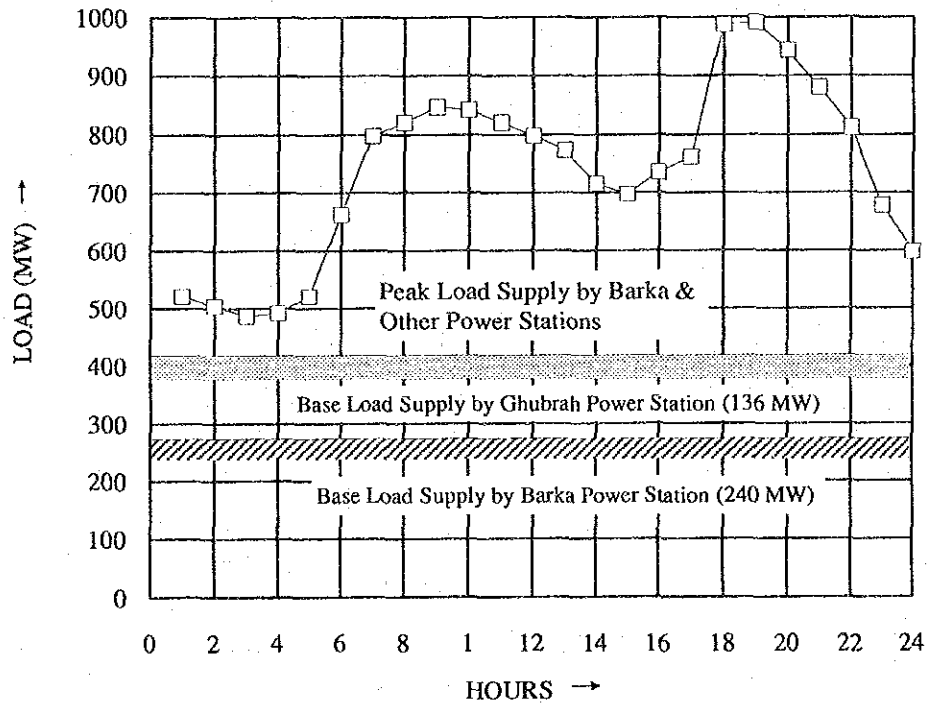

(b) MINIMUM LOAD DAY

Figure 3.1 Projected Daily Load Variation Curve in 2010

Table 3.1 Daily Load Variation for Muscat System in 1993

Time (Hrs)	Maximum Load Day (June 22 : 826 MW) System Load (MW)	System Load (%)	Amb. Temp. (°C)	Minimum Load Day (January 16 : 137 MW) System Load (MW)	System Load (%)	Amb. Temp. (°C)
0100	741	89.7	38.0	147	52.7	16.5
0200	726	87.9	37.0	142	50.9	16.0
0300	710	86.0	38.0	137	49.1	17.0
0400	696	84.3	37.0	139	49.8	16.5
0500	638	77.2	37.0	147	52.7	16.0
0600	567	68.6	37.0	187	67.0	16.0
0700	537	65.0	39.0	225	80.6	16.0
0800	591	71.5	41.0	231	82.8	16.0
0900	610	73.8	41.5	239	85.7	17.0
1000	626	75.8	43.5	237	84.9	17.0
1100	647	78.3	44.0	231	82.8	18.0
1200	677	82.0	44.0	225	80.6	19.0
1300	730	88.4	44.5	218	78.1	19.0
1400	785	95.0	43.5	202	72.4	19.0
1500	773	93.6	44.0	197	70.6	19.0
1600	778	94.2	44.5	207	74.2	18.5
1700	700	84.7	43.0	215	77.1	18.0
1800	614	74.3	41.0	278	99.6	17.5
1900	605	73.2	40.0	279	100.0	17.5
2000	670	81.1	39.0	266	95.3	16.0
2100	721	87.3	39.0	248	88.9	16.0
2200	768	93.0	40.0	229	82.1	16.0
2300	794	96.1	40.0	191	68.5	16.5
2400	785	95.0	37.0	169	60.6	16.0

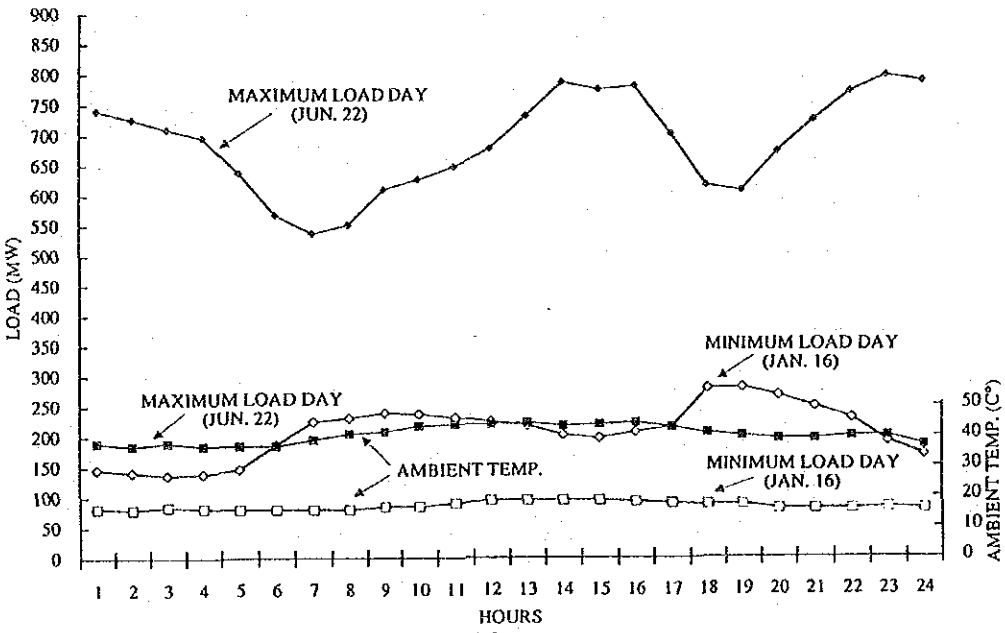

Figure 3.2 Daily Load Variation Curve for Muscat System in 1993

Table 3.3 Existing Power Stations of Muscat System

Power Stations	Unit No.	Machine Type/Model	Maker	Installed Capacity (MW)	Year of Comissioning
Ghubrah	ST - 1	KAE/20/71/118/100	BBC	8.5	1976
	ST - 2	KAE/20/71/118/100	BBC	8.5	1976
	ST - 3	KAE/20/71/118/100	BBC	8.5	1976
	ST - 4	KAE/20/106/180/200	BBC	50.0	1977
	ST - 5	1-K-2301	ABB	30.0	1993
	GT - 1	GE Frame 5	Alsthom	17.5	1978
	GT - 2	GE Frame 5	Alsthom	17.5	1978
	GT - 3	GE Frame 5	Alsthom	17.5	1978
	GT - 4	GE Frame 5	Alsthom	17.5	1979
	GT - 5	GE Frame 5	Alsthom	17.5	1979
	GT - 6	GE Frame 5	Alsthom	17.5	1979
	GT - 7	GE Frame 5	Alsthom	17.5	1979
	GT - 8	GE Frame 5	Alsthom	17.5	1979
	GT - 9	GE Frame 5	Alsthom	17.5	1979
	GT-10	GE Frame 6	GE	27.0	1983
	GT-11	GE Frame 6	GE	27.0	1983
	Total			317.0 MW	
	(ST Total 105.5MW, GT Total 211.5MW)				
Rusail	GT - 1	GE Frame 9	JBE	83.0	1984
	GT - 2	GE Frame 9	JBE	83.0	1984
	GT - 3	GE Frame 9	JBE	83.0	1984
	GT - 4	GE Frame 9	GE	83.0	1987
	GT - 5	GE Frame 9	GE	83.0	1987
	GT - 6	GE Frame 9	GE	83.0	1987
	Total			498.0 MW	
Total of Insllated Capacity				815.0 MW	

Source : MEW Statistical Year Book 1992
MEW Annual Report 1993

(Note) ST : Steam Turbine, GT : Gas Turbine

Table 3.4 Existing Power Stations of Waji Jizzi System

Power Stations	Unit No.	Machine Type/Model	Maker	Installed Capacity (MW)	Year of Commissioning
Waji Jizzi	GT - 1	GE Frame 5	GE	18.0	1982
	GT - 2	GE Frame 5	GE	18.0	1982
	GT - 3	GE Frame 5	GE	18.0	1982
	GT - 4	GE Frame 6	Thomassen	28.0	1985
	GT - 5	GE Frame 6	Thomassen	28.0	1985
	GT - 6	GE Frame 6	Alsthom	28.0	1986
	GT - 7	GE Frame 6	Alsthom	28.0	1986
	GT - 8	GE Frame 6	Thomassen	28.0	1990
	GT - 9	GE Frame 6	Thomassen	28.0	1993
	Total			222.0 MW	

Source : MEW Statistical Year Book 1992
MEW Annual Report 1993

(Note) GT : Gas Turbine

Table 3.5 Assumed Operational Life of Existing Power Plant Unit

ST: STEAM TURBINE (20 YEARS)
GT: GAS TURBINE (20 YEARS)

POWER STATION	TYPE	NO. & CAPACITY (MW)	1976	1978	1980	1982	1984	1986	1988	1990	1992	1994	1996	1998	2000	2002	2004	2006	2008	2010
GHUBRAH	ST	3 x 8.5 (25.5)	25.5	25.5	25.5	25.5	25.5	25.5	25.5	25.5	25.5	25.5	25.5							
	ST	1 x 50 (50)		50	50	50	50	50	50	50	50	50	50							
	ST	1 x 30 (30)								30	30	30	30	30	30	30	30	30		
	GT	3 x 17.5 (52.5)		52.5	52.5	52.5	52.5	52.5	52.5	52.5	52.5	52.5	52.5	52.5						
	GT	6 x 17.5 (105)			105	105	105	105	105	105	105	105	105	105						
	GT	2 x 27 (54)					54	54	54	54	54	54	54	54	54	54				
	GT	2 x 95 (190)											190	190	190	190	190	190	190	190
(537 MW)	ST	1 x 30 (30)											30	30	30	30	30	30	30	30
RUSAIL	GT	3 x 83 (249)					249	249	249	249	249	249	249	249	249	249	249			
(498 MW)	GT	3 x 83 (249)							249	249	249	249	249	249	249	249	249	249		
WADI JIZZI	GT	3 x 18 (54)				54	54	54	54	54	54	54	54	54	54	54				
	GT	2 x 28 (56)						56	56	56	56	56	56	56	56	56	56	56		
	GT	2 x 28 (56)						56	56	56	56	56	56	56	56	56	56			
	GT	1 x 28 (28)								28	28	28	28	28	28	28	28	28	28	
	GT	1 x 28 (28)										28	28	28	28	28	28	28	28	28
	GT	1 x 28 (28)											28	28	28	28	28	28	28	28
(278 MW)	GT	1 x 28 (28)											28	28	28	28	28	28	28	28
TOTAL INSTALLED CAPACITY (MW)			25.5	75.5	128	233	233	233	287	341	590	646	702	951	951	981	1,009	1,009	1,009	1,037
			1,065	1,283	1,288	1,238	1,185	1,080	1,080	1,080	1,026	972	723	667	611	332	332	332	304	

OPTION A

(1) GAS-STEAM COMBINED CYCLE POWER PLANT

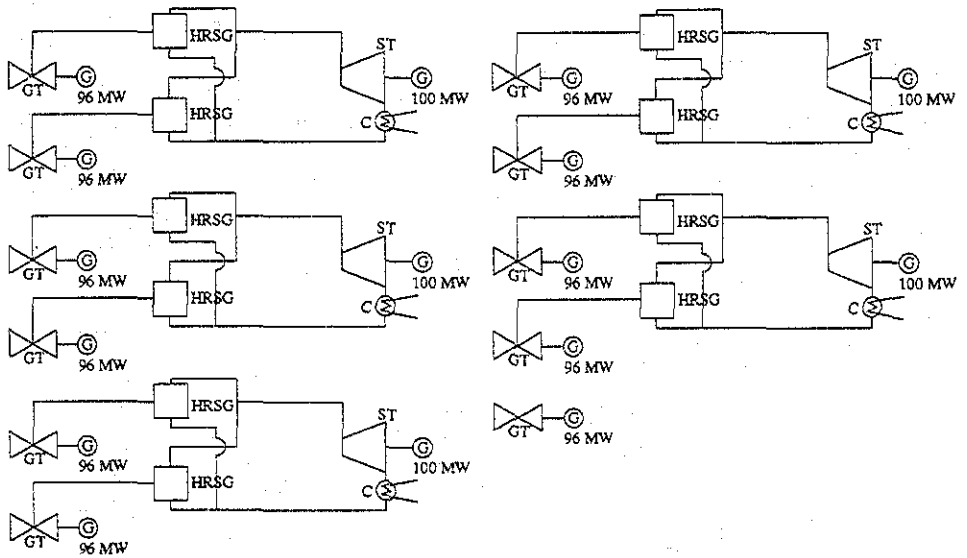

(2) BACK PRESSURE STEAM TURBINE CYCLE POWER PLANT AND DESALINATION PLANT (MSF TYPE)

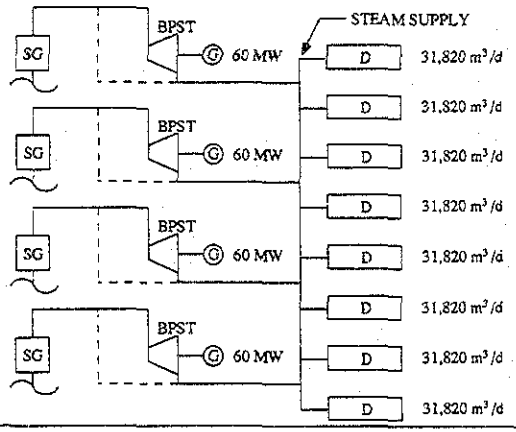

TOTAL OUTPUT

• Power Plant	Combined Cycle	292 MW x 5 =	1,460 MW	1,796 MW
	Gas Turbine (open cycle)	96 MW x 1 =	96 MW	
	Back Pressure Turbine	60 MW x 4 =	240 MW	
• Desalination Plant		31,820 m /d x 8 =	254,560 m /d	

OPTION B

(1) GAS-STEAM COMBINED CYCLE POWER PLANT

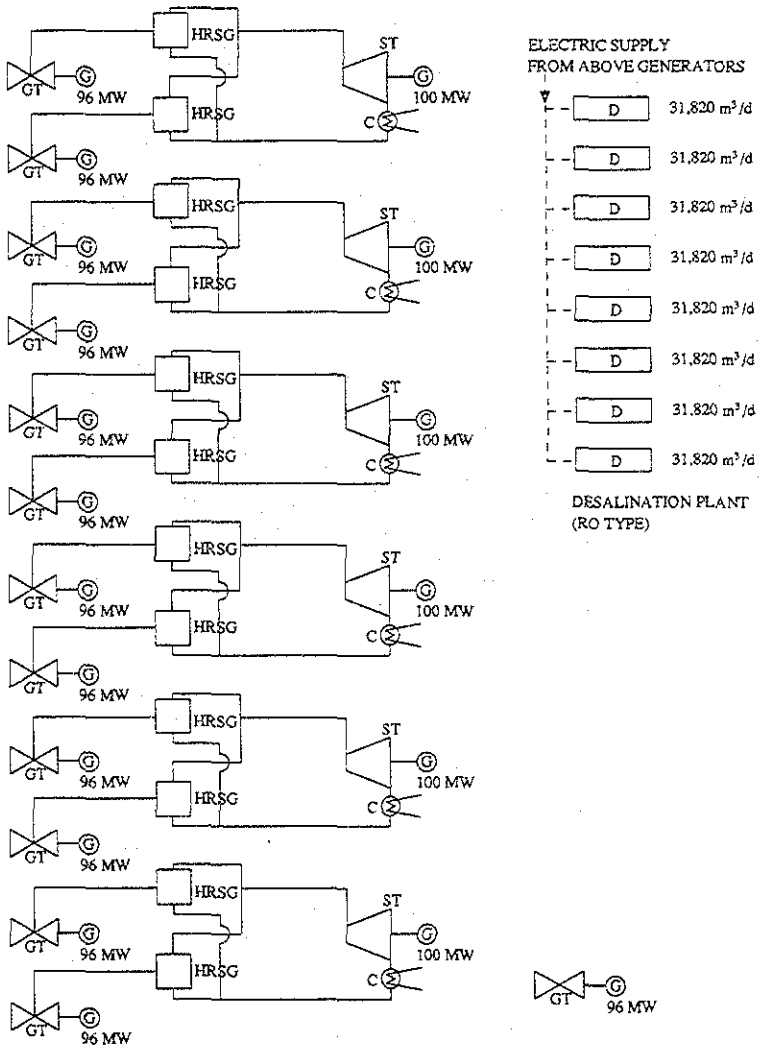

TOTAL OUTPUT

• Power Plant	Combined Cycle	292 MW x 6 =	1,752 MW	1,848 MW
	Gas Turbine (open cycle)	96 MW x 1 =	96 MW	
• Desalination Plant		31,820 m3/d x 8 =	254,560 m3/d	

ABBREVIATIONS

GT	:	Gas Turbine	G	:	Electric Generator
ST	:	Condensing Steam Turbine	SG	:	Steam Generator (Boiler)
BPST	:	Back Pressure Steam Turbine	D	:	Desalination Plant (MSF or RO type)
HRSG	:	Heat Recovery Steam Generator (Boiler)	C	:	Condenser

NOTES

1. This system diagram indicates major part of the power and desalination plant for a comparison of Options A and B. Details are omitted for clarity.

Figure 3.3 System Diagram of Power and Desalination Plant

APPENDIX 4

Table of Contents

Table 4.1 Operation Record of Ghubrah No. 5 Plant in 1993 ---------- 4 - 1

Table 4.2 Comparison of Annual Operation Cost for MSF and RO Types ---------- 4 - 1

Table 4.3 Comparison of Water Production Cost by Desalination Process ---------- 4 - 2

Figure 4.1 Transmission Pipeline Route---------- 4 - 3

Figure 4.2 Transmission Pipeline Route to South Batina---------- 4 - 4

Appendix Table 4.1 Operation Record of Ghubrah No. 5 Plant in 1993

	Description	Unit	Ghubrah No. 5 Plant
1	Operation Hrs	hrs	7314.9
2	Water Production	m^3/y	8,106,140
3	Load Factor	%	82.54
4	Average Water Production	m^3/d	26,596
5	Power Generation	MWH/y	223,522
6	Power Generation (Output)	MW	30.56
7	Fuel Gas Consumption	Nm^3/y	110,287,396
8	Per m^3 Fuel Gas Consumption	Nm^3/m^3	13.61
9	Per kwh Fuel Gas Consumption	Nm^3/kW	0.493
10	Efficiency	%	24.2
11	Aux. Power Consumption	MWH/y	44,987
12	Aux. Power Consumption	MW	6.15
13	Power Consumption for Water Production	kWh/m^3	5.55
14	Fuel Gas Cost	$R.O./Nm^3$	0.0283
15	Fuel Gas Caloric Value	$Kcal/Nm^3$	7,209
16	Fuel Oil Cost	R.O./l	0.108
17	Cost of Power Used	R.O./MWH	14.00

(Source: MEW MONTHLY REPORT)

Appendix Table 4.2 Comparison of Annual Operation Cost for MSF and RO Types

DESCRIPTION	MSF			RO	
	STANDARD MONTHLY COST 1993 (A)	STANDARD MONTHLY COST 1992 (B)	GHUBRAH NO. 5 COST (C)	CORRECTION FACTOR (D)	ASSUMED COST (E)
UNIT	R.O./M	R.O./M	R.O./Y	R.O./Y	R.O./Y
COST OF MAN POWER	111,305	99,804	138,012	0.50	69,006
COST OF CHEMICALS USED	37,514	30,880	79,608	1.30	103,490
COST OF CONSUMABLES	31,699	26,798	58,812	1.00	58,812
COST OF SPARES USED	52,284	31,330	251,448	1.00	251,448
COST OF MEMBRANE REPLACEMENT	0	0	0		548,000
COST OF EQUIP. DEPRECIATION	579,937	400,931	2,148,072		1,030,756

Notes 1. (C) = {(A) - (B)} x 12
2. (E) = (C) x (D)

Source: MEW MONTHLY REPORT FOR ITEMS (A) & (B)

Appendix Table 4.3 Comparison of Water Production Cost by Desalination Process

	DISCRIPTION	UNIT	CASE1	CASE2	CASE3
			DUAL PURPOSE MSF (GUBRAH NO.5)	6 MGPD RO PLANT	
			DESAL&POWER	DESAL.ONLY	DESAL.&POWER
DATA (PER YEAR)					
	INSTALLATION COST	R.O.	49,000,000	28,770,000	38,770,000
	EXPORTED WATER	CUB.MTRS	8,106,140	8,106,140	8,106,140
	FUEL GAS CONSUMP(PDO FIG)	CUB.MTRS	110,287,396	0	62,336,217
	FUEL OIL CONSUMP	LITRES	1,092,960	0	0
	POWER CONSUMED	M.W.HR	44,987	58,364	58,364
	POWER GENERATED	M.W.HR	223,522	0	236,900
EXPENCES IN R.O. PER YEAR					
1	FUEL GAS COST	R.O./Y	3,121,133	0	1,766,540
2	FUEL OIL COST	R.O./Y	118,040	0	0
3	COST OF POWER USED	R.O./Y	-2,499,494	817,099	-2,499,494
4	COST OF MAN POWER	R.O./Y	138,012	69,006	69,006
5	COST OF CHEMICAL USED	R.O./Y	79,808	103,490	103,490
6	COST OF CONSUMABLES	R.O./Y	58,812	58,812	58,812
7	COST OF SPARES USED	R.O./Y	251,448	826,848	826,848
8	COST OF EQUIP. DEPRECIATION	R.O./Y	3,920,000	2,301,600	3,101,600
9	TOTAL COST	R.O./Y	5,187,558	4,176,855	3,426,802
COST PER ONE CUB.MTR EXPORT					
1	FUEL GAS COST	BAIZA/m3	385.0	0.0	217.9
2	FUEL OIL COST	BAIZA/m3	14.6	0.0	0.0
3	COST OF POWER USED	BAIZA/m3	-308.3	100.8	-308.3
4	COST OF MAN POWER	BAIZA/m3	17.0	8.5	8.5
5	COST OF CHEMICAL USED	BAIZA/m3	9.8	12.8	12.8
6	COST OF CONSUMABLES	BAIZA/m3	7.3	7.3	7.3
7	COST OF SPARES USED	BAIZA/m3	31.0	102.0	102.0
8	COST OF EQUIP. DEPRECIATION	BAIZA/m3	483.6	283.9	382.6
9	TOTAL COST	BAIZA/m3	640.0	515.3	422.7
10	EXPORT WATER COST	BAIZA/GAL	2.92	2.35	1.93

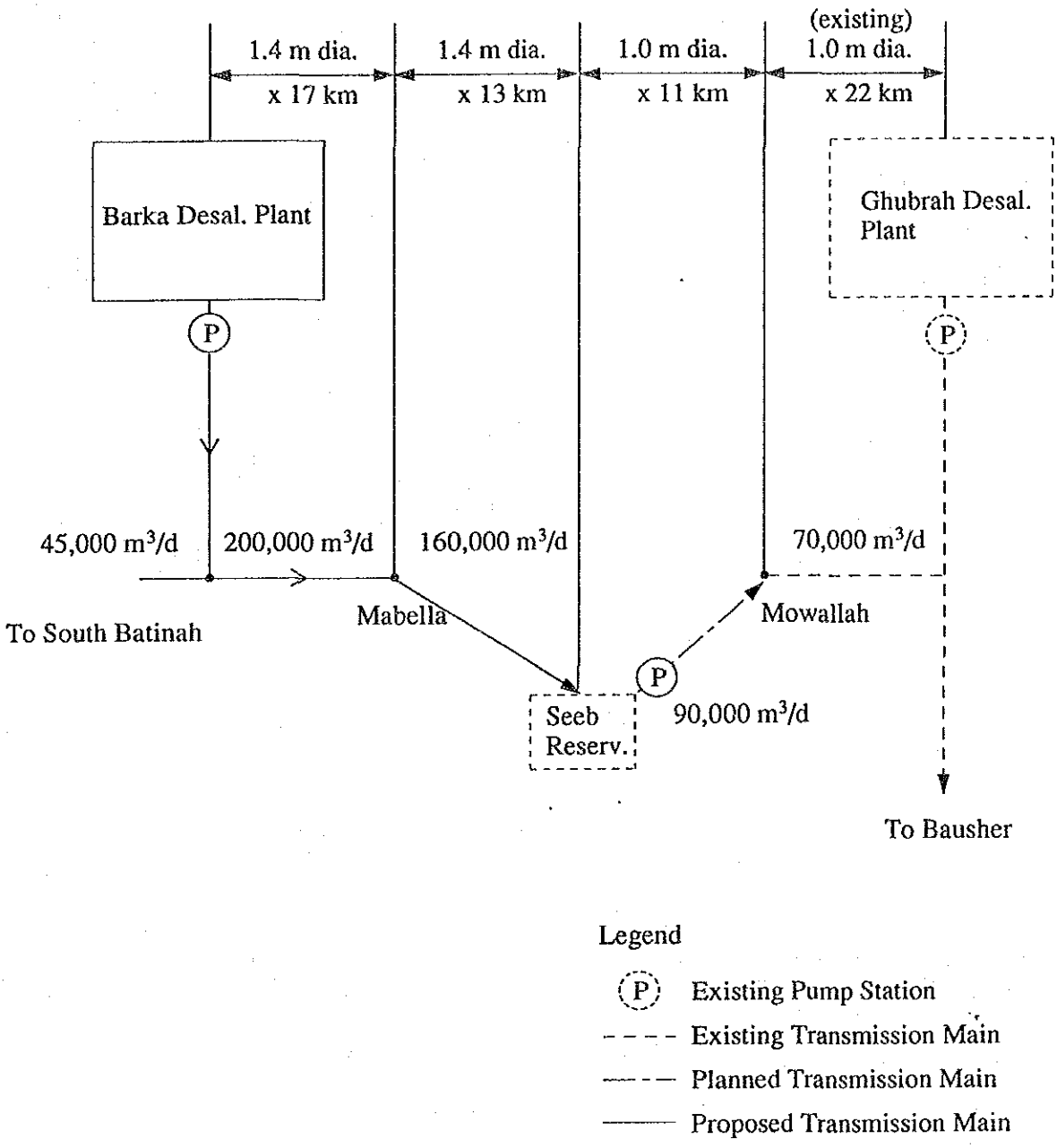

Appendix Figure 4.1 Transmission Pipeline Route

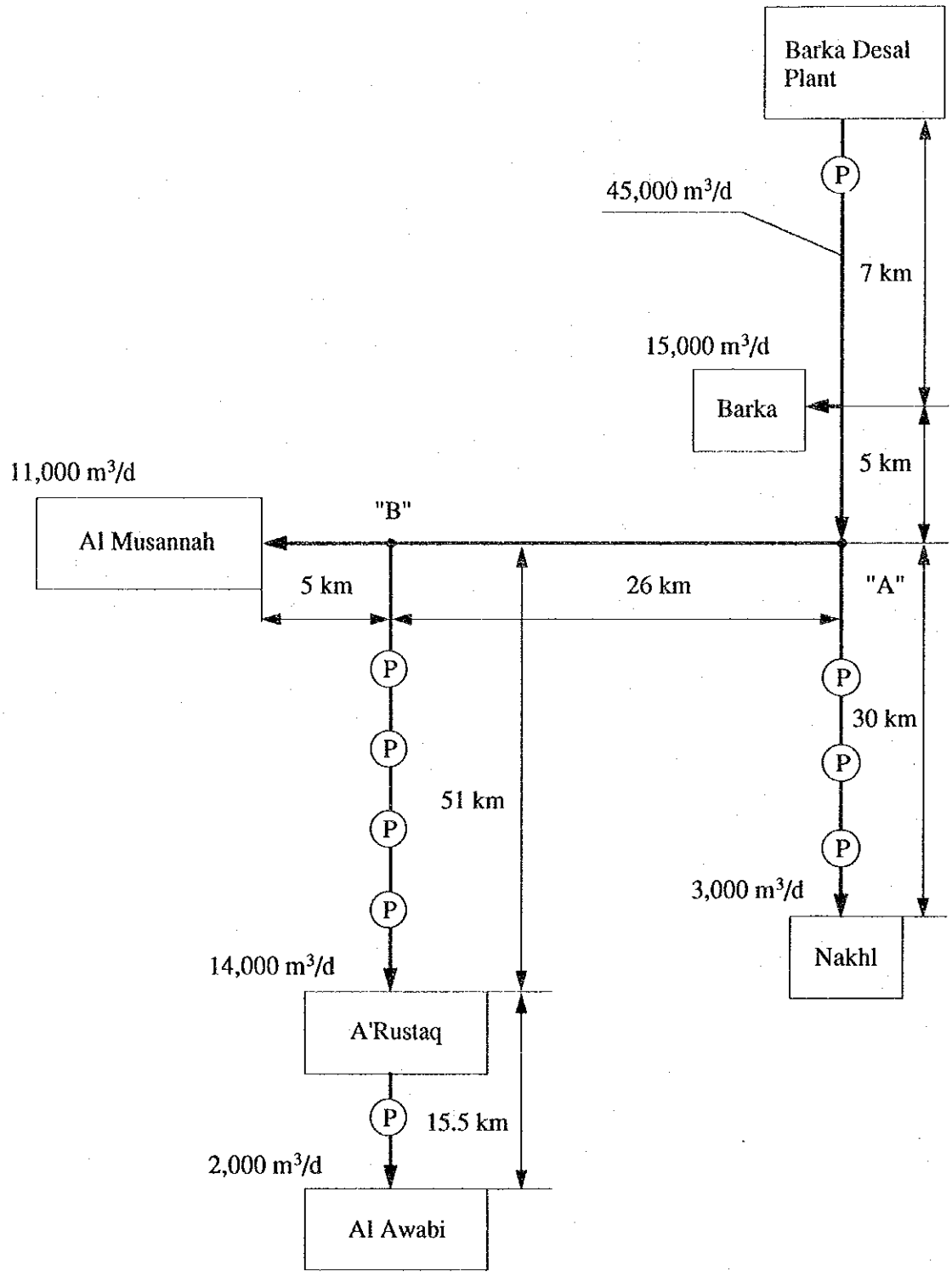

Appendix Figure 4.2 Transmission Pipeline Route to South Batina

APPENDIX 5.1

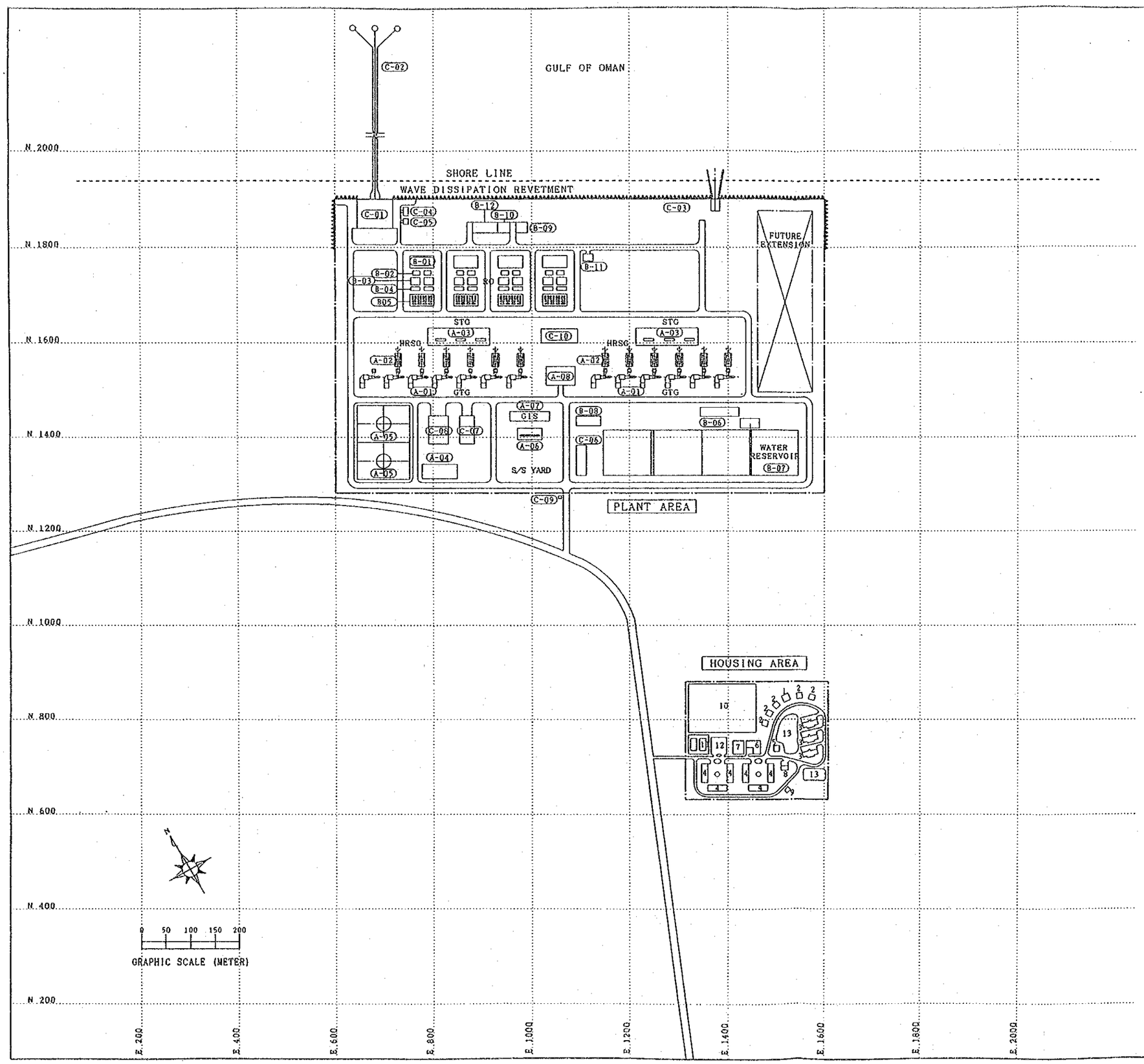

ITEM NO.	FACILITY	REMARKS
POWER PLANT		
A-01	GAS TURBINE GENERATOR (GTG)	
A-02	HEAT RECOVERY STEAM GENERATOR (HRSG)	
A-03	STEAM TURBINE GENERATOR (STG)	
A-04	FUEL GAS RECEIVING UNIT	
A-05	FUEL OIL TANK	
A-06	SENDING OUT FACILITY	
A-07	SWITCH GEAR ROOM (GIS)	
A-08	CENTRAL CONTROL BUILDING	
DESALINATION PLANT		
B-01	DUAL MEDIA FILTER	
B-02	BACK WASH TANK	
B-03	FILTERED WATER TANK	
B-04	CARTRIDGE FILTER	
B-05	HIGH PRESSURE PUMP	
B-06	PRODUCT WATER TREATMENT	
B-07	PRODUCT WATER RESERVOIR	
B-08	PRODUCT WATER PUMPING STATION	
B-09	DESAL CONTROL BUILDING	
B-10	DESAL CHEMICAL INJECT BUILDING	
B-11	DESAL SWITCH GEAR BUILDING	
B-12	CHEMICAL STORE HOUSE	
COMMON FACILITY		
C-01	SEA WATER INTAKE & PUMP PIT	
C-02	SEA WATER INTAKE PIPE LINE	
C-03	SEA WATER OUTFALL	
C-04	CHLORINATION BUILDING	
C-05	SEA WATER PUMP CONTROL ROOM	
C-06	ADMINISTRATION BUILDING	
C-07	STORE	
C-08	WORK SHOP	
C-09	GATE HOUSE	
C-10	UTILITY SPACE	

HOUSING AREA			
1	A-TYPE HOUSE	8	CLUB HOUSE
2	B-TYPE HOUSE	9	LAUNDY ROOM
3	C-TYPE HOUSE	10	SOCCER GROUND
4	D-TYPE HOUSE	11	TENNIS COURT
5	MOSQUE	12	PARKING AREA
6	MARKET	13	PLAY GROUND
7	CANTEEN		

THE SULTANATE OF OMAN
MINISTRY OF ELECTRICITY AND WATER
BARKA POWER AND DESALINATION PLANT PROJECT

Appendix 5.1 Plant Layout

APPENDIX 6.1

Social Conditions of the Project Area

Item	Description	Source
Land Use (Land Ownership)	Land of the Royal Family and not used at present	MEW, MH, S
Water Use (Marine)	Fishing/Recreation	S, DCM(1), R
Economic Activity around the area	The major activities are fishing and planting of date palm. The fishing is carried out in the area around the islands which are located about 15 km off-shore. The planting of date palm is observed to the south of the project site and the surroundings.	S, R, DCM(1)
Property Rights/Local Customs	It seems that there are no property rights applied in the vicinity of the site (fishery rights, water rights, etc.). Final confirmation needs to be taken from the relevant organizations before the implementation of the project. The coastal area including the site is designated as "Coastal Reserve Area". For any development work in this area, the approval from the relevant organizations such as MRME, MH etc. is needed	S, DCM(1), MAF, MH, MRME, MNHC MCI
Local Residence Population	There are no residents in the project site. There are several towns and villages within 5 km from the site. Barka is the largest town among them and its population in 1993 was 61,164. The others are much smaller than Barka and their populations are estimated as 1,000~2,000.	S
Public Health	The facilities for drinking water supply (piped supply) and waste water treatment were not observed.	S
Transportation	The national road, Route 1, runs in the east-west direction at approx. 3.7 km southward from the project site. There is a secondary road, nearby the site, which is a branch of Route 1 and leads to Barka.	S
Public Facilities	There are no facilities in the project site.	S
Pollution Complaints	None	S
Others	- The site is located about 60 km westward from Muscat. - There are no reports indicating the existence of cultural heritage.	MNHC

R : Residents S : Site Reconnaissance

DCM : Document/Book/Map

DCM(1) : Coastal Zone Management Plan - Greater Capital Area

Natural Conditions of the Project Area

Item	Description	Source
Weather	The rainy season is generally from November to April and the annual rainfall is approx. 100 mm around the proposed site. The maximum humidity and ambient temperature in summer (June ~ August) is more than 90 % and 45°C respectively.	DCM(1)
Natural Disasters	There are records of 10 cyclones which caused some damage to the coastal area of Oman in the years from 1963 to 1993. According to the records, no cyclones have intruded the area around the site, and the courses of cyclones generally pass in the area between Masirah Island and India.	MC
Air Condition	There is no source of air pollution around the proposed site.	S
Landscape (Typical Shapes)	The proposed site is generally flat and with quite gentle undulations	S
Soil Condition (Soil Contamination)	There is a sandy layer at the surface and the firm strata with SPT-value ≧ 50 are distributed at 5.0~11.0 m below the ground surface. The soils and underground water contain both sulphate and chloride.	S
Rivers	There is a small "wadi" about 200 m westward from the site.	S
Sea Data (Temperature, Currents)	The slope of the sea bed is gentle (1/100~1/200) and the water depth is about 7.0 m from CD at the location about 1 km offshore. The sea water temperature in December, 1993 was about 26°C. It is estimated to be about 30°C at the surface in the summer. The current velocity is estimated as 0.2 m/sec. or lower according to the measurement at Ghubrah by MEW.	DCM(2) S
Ground Water (Water Level, Uses)	The ground water table in the site was about GL-3 m (December, 1993). In Hayyasim, the ground water (saline water) is pumped up for the irrigation of plantation, but not used for drinking.	S
Vegetation	There are several kinds of trees, shrubs and other plants in and around the site.	S
Animals, Birds	There are traces of activities by some animals. Some goats and camels were seen in and around the site. Birds such as crows, sea gulls, etc. were also seen.	S
Aquatic Biota	Activities by pagurians, crabs, lugworms, etc. were observed. There are no coral reefs, breeding colonies of marine turtles or mangroves around the proposed site.	S, R, MRME
Endangered Species/Fragile Nature	No endangered species of fauna and flora exist around the site. Generally speaking, the endangered species are distributed in the mountainous area.	MRME, QU, S

DCM(1) : Statistical Year Book, 1992
DCM(2) : Hydraulic Study for the Sea-Water Intake Ghubrah Power and Desalination Plant Extension Phase III

APPENDIX 6.2

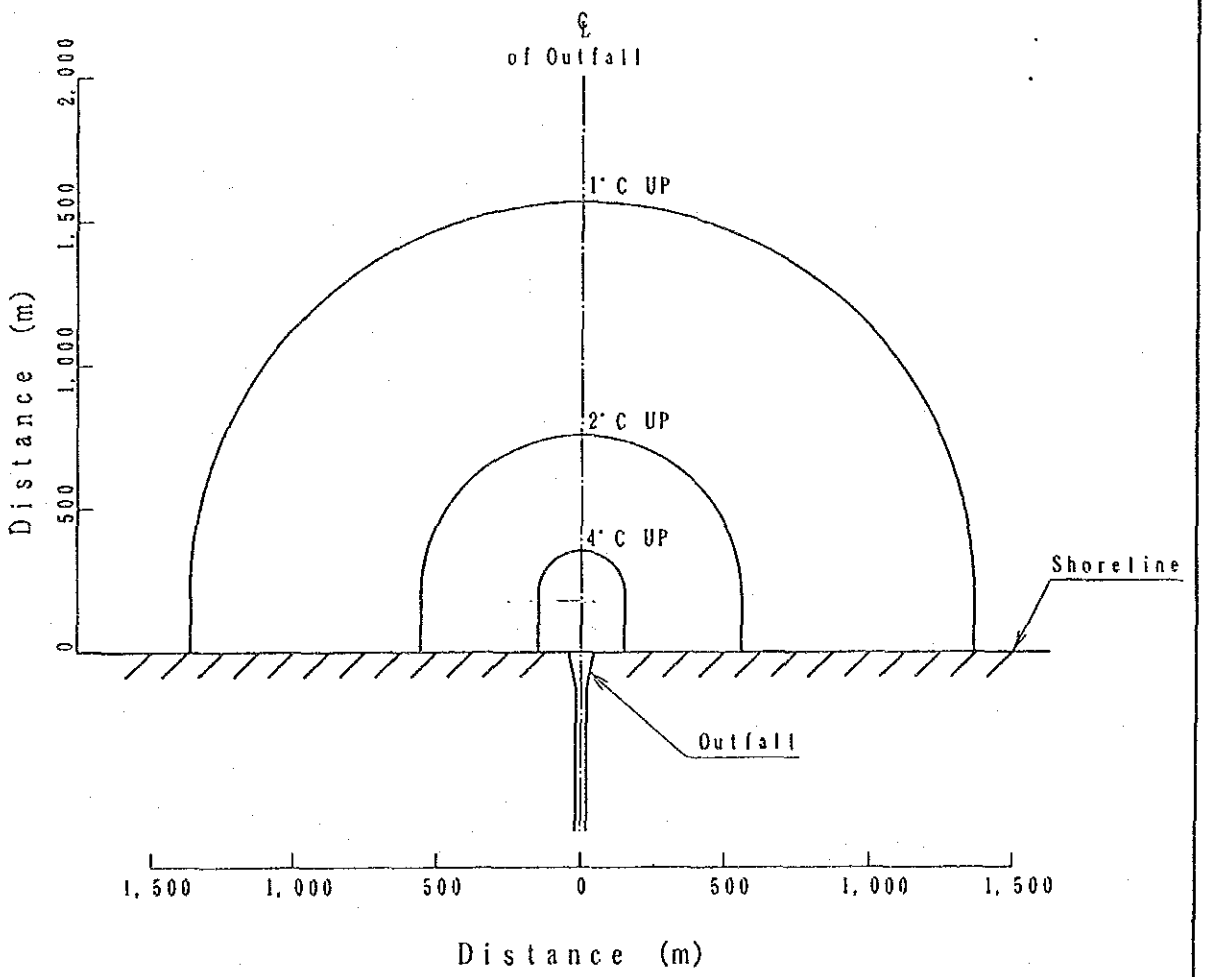

Hot Water Diffusion (Case-1)

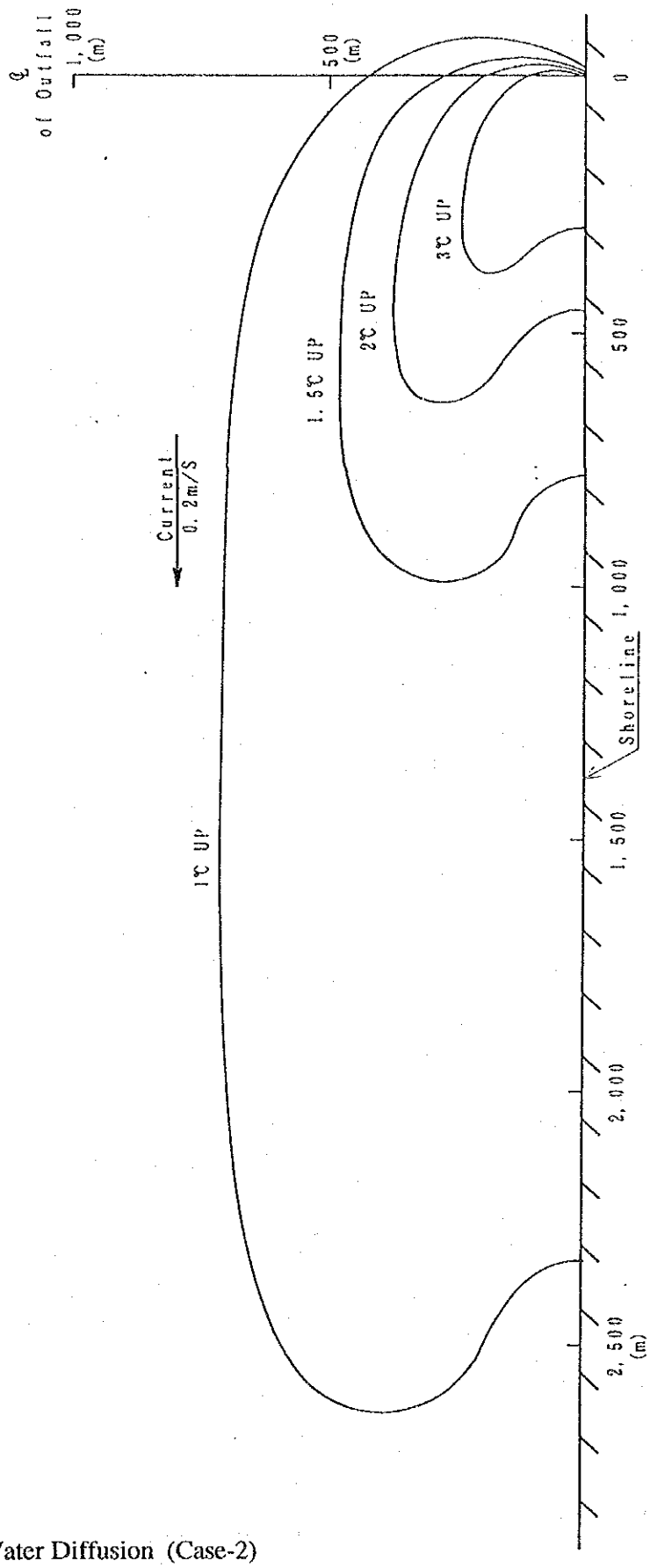

Hot Water Diffusion (Case-2)

APPENDIX 6.3

Table 13.3.1 Environmental Matrix

Environmental Item		Description	Survey Item	Survey Method	Evaluation		Basis of Judgement	Mitigation/Protection Measures	Monitoring	Specific Survey Items in Detailed EIA
					During Construction	During Operation				
1.	Resettlement	Relocation triggered by the project	Land location, land owner	Interview Access to land use map	D	D	No resettlement is required.	-	-	-
2.	Split of Societies	Split due to presence of the project	Locations of towns/ villages	Interview Access to land use map	D	D	Splitting of present societies is not expected.	-	-	-
3.	Aborigines	Impact to aborigines, minorities	Presence of aborigines or minorities	Site reconnaissance	D	D	No aborigines or minorities are present in the site.	-	-	-
4.	Friction	Increase of friction among people	Inhabitants' opinions of project	-	C	C	Unknown.	• The outline of the project to be open to the public before implementation.	-	• Inhabitants' opinions.
5.	Economic Activities	Impact to local economy, loss to the production basis	Major economic activities	Interview Examination of data	C	C	Impacts to fishing are unknown.	• Provision of an opportunity for employment. • Proper reimbursement if found necessary.	-	• Economic activities around the site, fisheries.
6.	Public Facilities	Impact to schools, hospitals, etc.	Distribution of public facilities	Site reconnaissance	D	C	A housing area for plant operators will be located near the existing village.	-	-	• Use of public facilities.
7.	Traffic	Increase of congestion, accidents	Road and traffic volume	Site reconnaissance Examination of data	B	C	Increase of traffic volume is expected especially during construction.	• Traffic signs to be arranged properly. • Traffic volume for construction to be well controlled.	-	• Present traffic volume, future plan for traffic system.
8.	Common Rights	Loss of fishing rights, common rights	Fisheries and fishing rights	Interview Examination of data	C	C	Confirmation of the fisheries by MAP is necessary.	• The outline of the project to be open to the public before implementation. • Proper reimbursement if found necessary.	-	• Fisheries, fishing rights.
9.	Cultural Heritage	Impact to historic monuments, etc.	Locations of cultural heritage sites	Interview Examination of data	C	C	Confirmation by MNHC is necessary.	• To consult MNHC and take countermeasures, if found.	-	• Site investigation with MNHC.
10.	Change of Views	Drastic change of panoramic views	Present conditions in the surrounding area	Interview Examination of data Site reconnaissance	C	C	The plant will be built on the beach where the natural features are preserved.	• To maintain harmony with the surrounding views by plantation, consideration to colour of structures, etc.	-	• Inhabitants' opinions. • Opinions of the relevant authorities regarding details of the project.
11.	Precious Nature	Collapse of wetlands, tropical forests, wildlands, mangroves, etc.	Present conditions in the surrounding area	Interview Examination of data Site reconnaissance	C	C	The beach around the site is designated as a "Coastal Reserve Area".	• To maintain harmony with the surrounding views by plantation, consideration to colour of structures, etc.	-	• Opinions of the relevant authorities regarding details of the project.
12.	Endangered Animals, Plants	Impact to endangered species, original animals, plants, etc.	Presence of endangered species in and around the site	Interview Examination of data Site reconnaissance	C	C	It seems that there are no endangered species in the project area. However, a detailed survey is required especially for aquatic biota.	-	-	• Detailed survey for fauna, flora, aquatic biota.
13.	Vegetation	Impact to vegetation	Present conditions	Site reconnaissance	B	D	Some trees and shrubs will be removed during construction.	• Plantation	-	-
14.	Landscape	Change of landscape (Change of shoreline)	Geographical features	Site reconnaissance Examination of data	B	B	The natural features will change due to filling and construction of plant facilities (marine structures).	• To adopt an appropriate type of water intake (buried pipeline). • Due consideration to be taken in the detailed design of marine structures.	• Survey for change of shoreline twice a year.	• Volume of sediment flowing into the sea from the wadi (littoral transportation).
15.	Groundwater	Change of groundwater level	Present conditions of groundwater	Site reconnaissance Examination of data	D	D	Groundwater around the site will not be used for the project.	-	-	-
16.	Surface Water	Change of route, volume, etc.	Present conditions	Site reconnaissance	C	C	A wadi exists to the west of the site.	• Rain water drainage around the site to be considered in the design.	• Visual inspection during and after rainfall.	-
17.	Surface Water	Change of temperature	Water quality, water temperature, aquatic biota	Site reconnaissance Examination of data Measurement and analysis for pollution	D	B	Hot water will be discharged into the sea.	• To design a fan-shaped outfall with proper dimensions for minimizing the impact area.	• Regular measurement of water temperature at the water intake and outfall. • Regular measurement of salinity at the outfall. • Survey for water temperature, water quality and aquatic biota in the sea around the site. (twice a year)	• Meteorological data, sea conditions. • Detailed analysis for hot water diffusion.
18.	Air Pollution	Caused by factories and cars	Meteorological conditions, distribution of living facilities, standards	Examination of data Analysis for pollution	C	B	Emission of exhaust gases.	• To use natural gas for operation. • Due consideration to be taken in the design of the stack for promoting dispersion. (especially for stack height)	• Regular monitoring for concentration of NOx, SOx, etc. at the stack and at ground level.	• Meteorological and geographical data. • Detailed analysis for dispersion of pollutants.
19.	Water Pollution	Caused by factories and land construction/ excavation	Fisheries, water quality, recreation use	Site reconnaissance Examination of data Interview	B	D	Turbidity of sea water during construction.	• To adopt proper construction methods for minimizing contamination. (use of silt-protector, etc.)	• Monitoring at appropriate points during construction.	• Sea conditions • Fisheries.
20.	Soil Contamination	Caused by toxic waste disposal	Present conditions	Site reconnaissance Interview	D	D	No disposal without treatment is expected.	• Industrial wastes to be treated if necessary. • To check chemicals in filling material.	• Regular measurement of discharged water quality.	-
21.	Noise/Vibration	Caused by traffic and factories	Distribution of living facilities, standards	Site reconnaissance Examination of data	B	C	Increase of traffic volume is expected especially during construction.	• Equipment generating noise to be arranged at a sufficient distance from the site boundary or to be housed. • To adopt low-noise equipment.	• Regular measurement of noise at the boundary.	-
22.	Ground Subsidence	Caused by overuse of groundwater	Underground conditions	Soil investigation	D	D	Groundwater around the site will not be used for the project.	-	-	-
23.	Offensive Odor	Caused by exhaust gas, wastes	Standards	Examination of data	D	D	No facilities causing offensive odor.	-	-	-

Evaluation Grade:

A: Strong impact is expected
B: Little impact is expected
C: Unknown (Not clear at this moment, but needs to be examined in detail)
D: Impact is insignificant, and no need to be a scope of EIA

APPENDIX 7.1

Alternative B (RO Process)

Appendix 7.1 Project Schedule for Power and Desalination Complex Plant

Activity Description \ Time	Total Month
I.Engineering/Bidding & Contract	
1. Design	
2. Technical Spec. & Bid Document	
3. Bidding	
4. Bid Evaluation & Negotiation	
5. Contract	
II.Manufacturing & Construction	
IIA.Civil Works	
1. Field Investigation	
2. Land Reclamation	
3. Sea Water Intake & Discharge Facilities	
4. Equipment Foundation	
5. Building	
IIB.Power Plant	
1. GTG Equipment 96MW	20
2. GTG Equipment 96MW	20
3. STG Equipment 100MW	30
4. GTG Equipment 96MW (open cycle)	20
5. Power Transmission Facilities	
IIC.Desalination Plant	
1. RO Equipment 31,800m3/d	24
2. RO Equipment 31,800m3/d	24
3. Water Transmission Facilities	

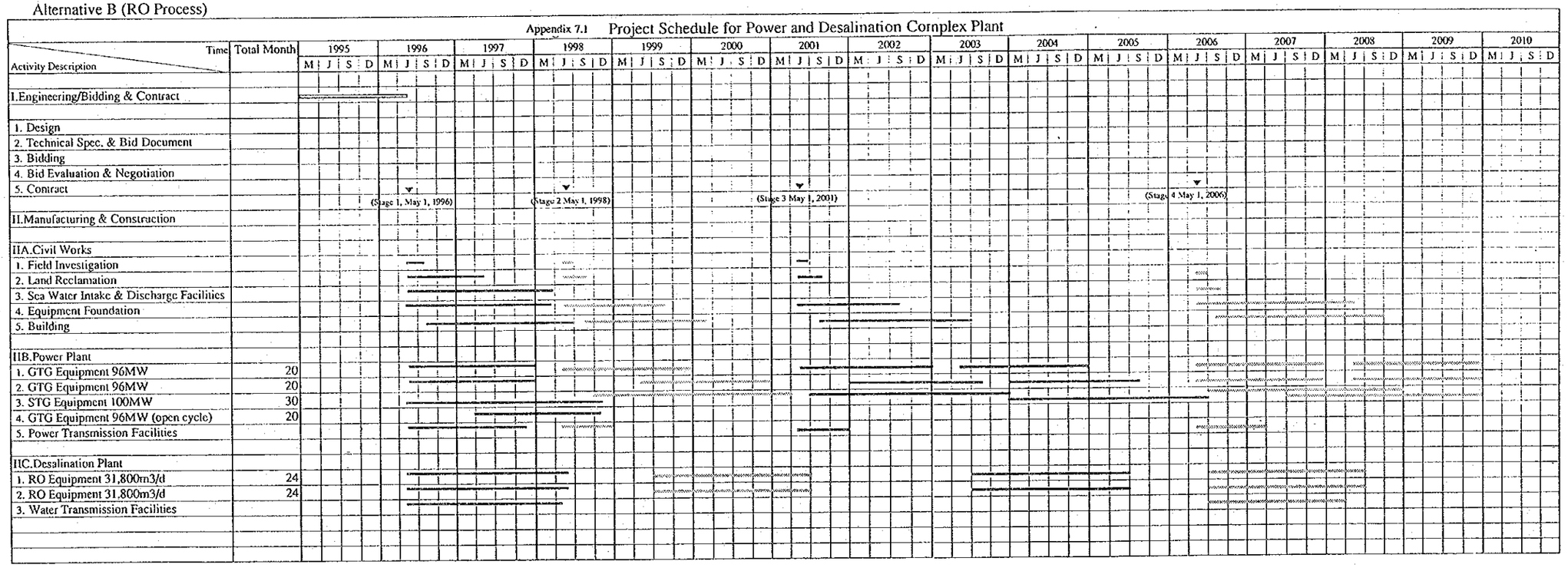

APPENDIX 8

APPENDIX 8

Table of Contents

Appendix 8.1 (1)	Capital and Operating Costs - Alternative 1	8 - 1
Appendix 8.1 (2)	Capital and Operating Costs - Alternative 2	8 - 2
Appendix 8.1 (3)	Capital and Operating Costs - Alternative 3	8 - 3
Appendix 8.1 (4)	Capital and Operating Costs - Alternative 4	8 - 4
Appendix 8.1 (5)	Unit Rate of Operating Cost	8 - 5
Appendix 8.2 (1)	Discounted Total Cost - Alternative 1	8 - 6
Appendix 8.2 (2)	Discounted Total Cost - Alternative 2	8 - 7
Appendix 8.2 (3)	Discounted Total Cost - Alternative 3	8 - 8
Appendix 8.2 (4)	Discounted Total Cost - Alternative 4	8 - 9
Appendix 8.3	Financial Rate of Return Analysis	8-10~8-12
Appendix 8.4	Sensitivity Analysis for FRR	8-13
Appendix 8.5	Construction Cost (Stage 1)	8-14
Appendix 8.6	Investment Costs Disbursement and Flow Financial Resources - Power Plant	8-15
Appendix 8.7	Investment Costs Disbursement and Flow Financial Resources - Desalination Plant	8-16
Appendix 8.8	Projected Cash Flow before Debt Service (Operation Period) 1998 - 2018	8-17

Appendix 8.9 Cash Flow Table for Financial Planning (Operation Period) - Stage 1 ---------- 8-18

Appendix 8.10 Discounted Return on Equity Invested ---------- 8-19

Appendix 8.11 Economic Rate of Return Analysis Revenue - Based Approach ---------- 8-20~8-22

Appendix 8.12 Sensitivity Analysis for ERR ---------- 8-23

Appendix 8.13 Key Assumptions for the Alternative ---------- 8-24

Appendix 8.14 Economic Cost of Alternative Scheme - Electricity ---------- 8-25

Appendix 8.15 Economic Rate of Return Analysis (Electricity) Comparative Method ---------- 8-26

Appendix 8-16 Economic Rate of Return Analysis (Water) Comparative Method ---------- 8-27

Appendix 8.1 (1) Capital and operating costs--Alternative 1

million R.O.

Year	1996	1997	1998	1999	2000	2001	2002	2003	2004	2005	2006	2007	2008	2009	2010	Total
1 Requirements																
Power																
1 Energy (MWH)			480,804	917,424	1,380,315	1,873,336	2,397,365	2,954,389	3,546,528	4,173,583	4,755,715	5,370,760	6,020,661	6,707,482	7,433,412	
2 Power (MW)			106	201	302	409	523	644	774	910	1,037	1,171	1,313	1,462	1,620	
3 Installed capacity (MW)																
C.C.			192	292	388	484	580	680	776	972	972	1,164	1,264	1,456	1,556	
BPST			0	60	60	60	120	120	120	120	180	180	180	240	240	
Total			192	352	448	544	700	800	896	1,092	1,152	1,344	1,444	1,696	1,796	
Water																
1 Water production (m3)				10,131	20,224	34,999	50,500	66,764	83,829	100,525	115,089	130,298	146,183	162,779	180,122	
2 Installed capacity (m3/d)																
2 Capital costs																
Power																
Foreign	16.92	127.81	19.12	3.59	36.40	45.09	12.84	47.05	37.73	9.35	62.68	27.85	62.68	7.08	0.00	516.19
Local	3.16	14.35	14.08	0.04	0.56	3.21	0.66	3.10	0.48	0.53	3.20	0.75	3.32	0.29	0.00	47.73
Sub total	20.08	142.16	33.20	3.63	36.96	48.30	13.50	50.15	38.21	9.88	65.88	28.60	66.00	7.37	0.00	563.92
Water																
Foreign	9.04	64.58	9.95	5.50	42.04	6.52	0.00	5.50	42.04	6.52	6.93	53.49	7.96	0.00	0.00	260.07
Local	3.80	21.05	13.15	1.02	5.39	3.81	0.00	1.02	5.39	3.81	1.38	7.52	4.86	0.00	0.00	72.20
Sub total	12.84	85.63	23.10	6.52	47.43	10.33	0.00	6.52	47.43	10.33	8.31	61.01	12.82	0.00	0.00	332.27
Total																
Foreign	25.96	192.39	29.07	9.09	78.44	51.61	12.84	52.55	79.77	15.87	69.61	81.34	70.64	7.08	0.00	776.26
Local	6.96	35.40	27.23	1.06	5.95	7.02	0.66	4.12	5.87	4.34	4.58	8.27	8.18	0.29	0.00	119.93
Total	32.92	227.79	56.30	10.15	84.39	58.63	13.50	56.67	85.64	20.21	74.19	89.61	78.82	7.37	0.00	896.19
3 Operating costs																
Power																
Foreign			0.14	0.31	0.45	0.59	0.80	0.97	1.15	1.32	1.57	1.74	1.93	2.18	2.40	15.53
Local			3.53	6.38	9.71	13.28	16.66	20.67	24.95	29.59	33.21	37.78	42.48	47.07	52.30	337.61
Sub total			3.67	6.68	10.16	13.87	17.46	21.64	26.09	30.91	34.78	39.52	44.41	49.25	54.70	353.14
Water																
Foreign				0.18	0.36	0.61	0.89	1.17	1.47	1.76	2.02	2.29	2.57	2.86	3.16	19.34
Local				1.18	2.35	4.06	5.86	7.75	9.74	11.67	13.37	15.13	16.98	18.90	20.92	127.91
Sub total				1.35	2.70	4.68	6.75	8.93	11.21	13.44	15.39	17.42	19.54	21.76	24.08	147.25
Total																
Foreign			0.14	0.48	0.80	1.21	1.69	2.14	2.62	3.09	3.59	4.02	4.50	5.04	5.56	34.87
Local			3.53	7.55	12.06	17.34	22.52	28.43	34.68	41.26	46.58	52.91	59.46	65.97	73.21	465.52
Total			3.67	8.04	12.86	18.55	24.21	30.57	37.30	44.35	50.17	56.94	63.95	71.01	78.78	500.39
4 Capital/Operating costs																
Foreign	25.96	192.39	29.21	9.57	79.24	52.82	14.53	54.69	82.39	18.96	73.20	85.36	75.14	12.12	5.56	811.13
Local	6.96	35.40	30.76	8.61	18.01	24.36	23.18	32.55	40.55	45.60	51.16	61.18	67.64	66.26	73.21	585.45
Grand total	32.92	227.79	59.97	18.19	97.25	77.18	37.71	87.24	122.94	64.56	124.36	146.55	142.77	78.38	78.78	1,396.58

Note: C.C.: Combined cycle
BPST: Back pressure steam turbine

Appendix 8.1 (2) Capital and operating costs--Alternative 2

million R.O.

Year	1996	1997	1998	1999	2000	2001	2002	2003	2004	2005	2006	2007	2008	2009	2010	Total
1 Requirements																
Power																
1 Energy (MWH)			475,898	913,345	1,376,776	1,872,470	2,399,234	2,959,055	3,554,049	4,183,412	4,767,198	5,383,898	6,035,450	6,723,916	7,451,482	
2 Power (MW)			106	202	304	413	529	652	783	921	1,050	1,185	1,329	1,480	1,640	
3 Installed capacity (MW)																
Total			192	388	484	580	680	776	972	1,068	1,164	1,360	1,456	1,652	1,848	
Water																
1 Water production (m3)				10,131	20,224	34,999	50,500	66,764	83,829	100,525	115,089	130,298	146,183	162,779	180,122	
2 Installed capacity (m3/d)																
2 Capital costs																
Power																
Foreign	15.16	114.11	19.54	23.65	42.35	12.57	44.46	27.19	23.23	44.87	30.31	48.57	51.95	24.66	0.00	522.62
Local	2.95	12.89	13.80	1.65	0.30	0.36	0.47	1.89	0.34	1.78	0.64	2.00	2.08	0.41	0.00	41.56
Sub total	18.11	127.00	33.34	25.30	42.65	12.93	44.93	29.08	23.57	46.65	30.95	50.57	54.03	25.07	0.00	564.18
Water																
Foreign	0.93	12.75	65.98	0.00	5.56	33.03	0.00	0.00	5.56	33.03	0.00	5.56	33.03	0.00	0.00	195.43
Local	1.14	8.63	23.75	0.00	1.11	9.92	0.00	0.00	1.11	9.92	0.00	1.11	9.92	0.00	0.00	66.61
Sub total	2.07	21.38	89.73	0.00	6.67	42.95	0.00	0.00	6.67	42.95	0.00	6.67	42.95	0.00	0.00	262.04
Total																
Foreign	16.09	126.86	85.52	23.65	47.91	45.60	44.46	27.19	28.79	77.90	30.31	54.13	84.98	24.66	0.00	718.05
Local	4.09	21.52	37.55	1.65	1.41	10.28	0.47	1.89	1.45	11.70	0.64	3.11	12.00	0.41	0.00	108.17
Total	20.18	148.38	123.07	25.30	49.32	55.88	44.93	29.08	30.24	89.60	30.95	57.24	96.98	25.07	0.00	826.22
3 Operating costs																
Power																
Foreign			0.14	0.26	0.39	0.53	0.68	0.84	1.01	1.19	1.36	1.53	1.72	1.92	2.12	13.71
Local			3.49	6.70	10.11	13.74	17.61	21.72	26.09	30.71	34.99	39.52	44.30	49.35	54.69	353.03
Sub total			3.63	6.96	10.50	14.28	18.29	22.56	27.10	31.90	36.35	41.05	46.02	51.27	56.82	366.73
Water																
Foreign				0.42	0.84	1.46	2.10	2.78	3.49	4.19	4.80	5.43	6.09	6.78	7.51	45.91
Local				0.37	0.74	1.28	1.85	2.45	3.08	3.69	4.23	4.78	5.37	5.98	6.61	40.44
Sub total				0.79	1.59	2.74	3.96	5.23	6.57	7.88	9.02	10.21	11.46	12.76	14.12	86.34
Total																
Foreign			0.14	0.68	1.24	1.99	2.79	3.63	4.51	5.38	6.16	6.97	7.81	8.70	9.63	59.61
Local			3.49	7.08	10.85	15.03	19.46	24.17	29.16	34.40	39.22	44.30	49.67	55.33	61.31	393.46
Total			3.63	7.76	12.08	17.02	22.25	27.80	33.67	39.78	45.37	51.27	57.48	64.03	70.94	453.08
4 Capital/Operating cost																
Foreign	16.09	126.86	85.66	24.33	49.15	47.59	47.25	30.82	33.30	83.28	36.47	61.10	92.79	33.36	9.63	777.66
Local	4.09	21.52	41.04	8.73	12.26	25.31	19.93	26.06	30.61	46.10	39.86	47.41	61.67	55.74	61.31	501.63
Grand total	20.18	148.38	126.70	33.06	61.40	72.90	67.18	56.88	63.91	129.38	76.32	108.51	154.46	89.10	70.94	1,279.30

Appendix 8.1 (3) Capital and operating costs--Alternative 3

million R.O.

Year	1996	1997	1998	1999	2000	2001	2002	2003	2004	2005	2006	2007	2008	2009	2010	Total
1 Requirements																
Power																
1 Energy (MWH)			480,804	917,424	1,380,315	1,873,336	2,397,365	2,954,389	3,546,528	4,173,583	4,755,715	5,370,760	6,020,661	6,707,482	7,433,412	
2 Power (MW)			106	201	302	409	523	644	774	910	1,037	1,171	1,313	1,462	1,620	
3 Installed capacity (MW)																
C.C.			480	680	680	680	680	680	872	872	1,556	1,556	1,556	1,556	1,556	
BPST				120	120	120	120	120	120	120	240	240	240	240	240	
Total			480	800	800	800	800	800	992	992	1,796	1,796	1,796	1,796	1,796	
Water																
1 Water production (m3)				10,131	20,224	34,999	50,500	66,764	83,829	100,525	115,089	130,298	146,183	162,779	180,122	
2 Installed capacity (m3/d)																
2 Capital costs																
Power																
Foreign	24.89	191.02	26.71	0.00	0.00	0.00	3.65	46.56	104.11	88.72	0.00	0.00	0.00	0.00	0.00	485.66
Local	3.45	16.67	14.39	0.00	0.00	0.00	0.02	1.17	7.74	1.41	0.00	0.00	0.00	0.00	0.00	44.85
Sub total	28.34	207.69	41.10	0.00	0.00	0.00	3.67	47.73	111.85	90.13	0.00	0.00	0.00	0.00	0.00	530.51
Water																
Foreign	13.81	101.61	15.47	0.00	0.00	0.00	0.00	10.31	79.17	12.04	1.43	11.45	1.44	0.00	0.00	246.73
Local	4.49	24.59	15.82	0.00	0.00	0.00	0.00	1.74	9.19	6.48	0.35	2.13	1.05	0.00	0.00	65.84
Sub total	18.30	126.20	31.29	0.00	0.00	0.00	0.00	12.05	88.36	18.52	1.78	13.58	2.49	0.00	0.00	312.57
Total																
Foreign	38.70	292.63	42.18	0.00	0.00	0.00	3.65	56.87	183.28	100.76	1.43	11.45	1.44	0.00	0.00	732.39
Local	7.94	41.26	30.21	0.00	0.00	0.00	0.02	2.91	16.93	7.89	0.35	2.13	1.05	0.00	0.00	110.69
Total	46.64	333.89	72.39	0.00	0.00	0.00	3.67	59.78	200.21	108.65	1.78	13.58	2.49	0.00	0.00	843.08
3 Operating costs																
Power																
Foreign			0.14	0.30	0.45	0.61	0.79	0.97	1.13	1.33	1.54	1.74	1.95	2.17	2.40	15.51
Local			3.53	6.42	9.66	13.11	16.78	20.67	25.05	29.48	33.46	37.79	42.36	47.19	52.30	337.79
Sub total			3.67	6.72	10.11	13.72	17.56	21.64	26.19	30.82	34.99	39.52	44.30	49.36	54.70	353.30
Water																
Foreign				0.18	0.36	0.61	0.89	1.17	1.47	1.76	2.02	2.29	2.57	2.86	3.16	19.34
Local				1.18	2.35	4.06	5.86	7.75	9.74	11.67	13.37	15.13	16.98	18.90	20.92	127.91
Sub total				1.35	2.70	4.68	6.75	8.93	11.21	13.44	15.39	17.42	19.54	21.76	24.08	147.25
Total																
Foreign			0.14	0.48	0.81	1.23	1.67	2.14	2.60	3.10	3.56	4.02	4.51	5.02	5.56	34.85
Local			3.53	7.60	12.01	17.17	22.64	28.43	34.79	41.16	46.82	52.92	59.33	66.09	73.21	465.71
Total			3.67	8.08	12.82	18.40	24.31	30.57	37.39	44.26	50.38	56.94	63.85	71.12	78.78	500.55
4 Capital/Operating costs																
Foreign	38.70	292.63	42.32	0.48	0.81	1.23	5.32	59.01	185.88	103.86	4.99	15.47	5.95	5.02	5.56	767.24
Local	7.94	41.26	33.74	7.60	12.01	17.17	22.66	31.34	51.72	49.05	47.17	55.05	60.38	66.09	73.21	576.40
Grand total	46.64	333.89	76.06	8.08	12.82	18.40	27.98	90.35	237.60	152.91	52.16	70.52	66.34	71.12	78.78	1,343.63

Appendix 8.1 (4) Capital and operating costs--Alternative 4

million R.O.

Year	1996	1997	1998	1999	2000	2001	2002	2003	2004	2005	2006	2007	2008	2009	2010	Total
1 Requirements																
Power																
1 Energy (MWH)			475,898	913,345	1,376,776	1,872,470	2,399,234	2,959,055	3,554,049	4,183,412	4,767,198	5,383,898	6,035,450	6,723,916	7,451,482	
2 Power (MW)			106	202	304	413	529	652	783	921	1,050	1,185	1,329	1,480	1,640	
3 Installed capacity (MW)																
Total			480	680	680	680	680	872	872	1,064	1,848	1,848	1,848	1,848	1,848	
Water																
1 Water production (m3)				10,131	20,224	34,999	50,500	66,764	83,829	100,525	115,089	130,298	146,183	162,779	180,122	
2 Installed capacity (m3/d)																
2 Capital costs																
Power																
Foreign	21.63	165.57	23.60	0.00	0.00	3.65	32.89	17.43	134.85	92.28	0.00	0.00	0.00	0.00	0.00	491.90
Local	3.12	14.25	13.84	0.00	0.00	0.02	0.20	0.77	5.93	1.42	0.00	0.00	0.00	0.00	0.00	39.55
Sub total	24.75	179.82	37.44	0.00	0.00	3.67	33.09	18.20	140.78	93.70	0.00	0.00	0.00	0.00	0.00	531.45
Water																
Foreign	0.92	17.63	94.62	0.00	0.00	0.00	0.00	0.00	10.40	61.30	0.00	0.00	0.00	0.00	0.00	184.87
Local	1.14	9.31	29.74	0.00	0.00	0.00	0.00	0.00	1.63	14.52	0.00	0.00	0.00	0.00	0.00	56.34
Sub total	2.06	26.94	124.36	0.00	0.00	0.00	0.00	0.00	12.03	75.82	0.00	0.00	0.00	0.00	0.00	241.21
Total																
Foreign	22.55	183.20	118.22	0.00	0.00	3.65	32.89	17.43	145.25	153.58	0.00	0.00	0.00	0.00	0.00	676.77
Local	4.26	23.56	43.58	0.00	0.00	0.02	0.20	0.77	7.56	15.94	0.00	0.00	0.00	0.00	0.00	95.89
Total	26.81	206.76	161.80	0.00	0.00	3.67	33.09	18.20	152.81	169.52	0.00	0.00	0.00	0.00	0.00	772.66
3 Operating costs																
Power																
Foreign			0.14	0.26	0.39	0.53	0.68	0.84	1.01	1.19	1.36	1.53	1.72	1.92	2.12	13.71
Local			3.49	6.70	10.11	13.74	17.61	21.72	26.09	30.71	34.99	39.52	44.30	49.35	54.69	353.03
Sub total			3.63	6.96	10.50	14.28	18.29	22.56	27.10	31.90	36.35	41.05	46.02	51.27	56.82	366.73
Water																
Foreign				0.42	0.84	1.46	2.10	2.78	3.49	4.19	4.80	5.43	6.09	6.78	7.51	45.91
Local				0.37	0.74	1.28	1.85	2.45	3.08	3.69	4.23	4.78	5.37	5.98	6.61	40.44
Sub total				0.79	1.59	2.74	3.96	5.23	6.57	7.88	9.02	10.21	11.46	12.76	14.12	86.34
Total																
Foreign			0.14	0.68	1.24	1.99	2.79	3.63	4.51	5.38	6.16	6.97	7.81	8.70	9.63	59.61
Local			3.49	7.08	10.85	15.03	19.46	24.17	29.16	34.40	39.22	44.30	49.67	55.33	61.31	393.46
Total			3.63	7.76	12.08	17.02	22.25	27.80	33.67	39.78	45.37	51.27	57.48	64.03	70.94	453.08
4 Capital/Operating costs																
Foreign	22.55	183.20	118.36	0.68	1.24	5.64	35.68	21.06	149.76	158.96	6.16	6.97	7.81	8.70	9.63	736.38
Local	4.26	23.56	47.07	7.08	10.85	15.05	19.66	24.94	36.72	50.34	39.22	44.30	49.67	55.33	61.31	489.35
Grand total	26.81	206.76	165.43	7.76	12.08	20.69	55.34	46.00	186.48	209.30	45.37	51.27	57.48	64.03	70.94	1,225.74

Appendix 8.1 (5) Unit rate of operating cost

Electricity

Item	Unit	BPST	C.C.
Fuel cost	R.O./kWh	0.00444	0.00703
Manpower	R.O./kWh	0.00042	0.00021
Spares	R.O./kWh	0.00057	0.00029
Others	R.O./kWh	0.00020	0.00010
Sub total	R.O./kWh	0.00563	0.00763

Water

Item	Unit	MSF	RO
Fuel cost	R.O./m3	0.30114	
Electric. cost	R.O./m3		0.09520
Manpower	R.O./m3	0.01703	0.00538
Chemicals & consumables	R.O./m3	0.01708	0.02061
Spares & memblane replacement	R.O./m3	0.03102	0.09358
Sub total	R.O./m3	0.36627	0.21477

Unit rate of energy consumption

Item		Unit	BPST/MSF	CC/RO
Calorific value of NG		kcal/m3N	7210	7210
Gene. effic.		%	19	48
NG consumption per kWh		m3N/kWh	0.62778305	0.24849746
NG cost		R.O./m3N	0.0283	0.0283
Power energy cost		R.O./kWh	0.01777	0.00703
Cost shear	Elec.		0.25	1
	Water		0.75	
NG cost per elect.		R.O./kWh	0.00444	
Power gene. per water		kWh/m3	22.6	
Power consumption per water		kWh/m3	5.4	6.8
Power export per water		kWh/m3	17.2	
Energy cost per water		R.O./m3	0.30114	

Export rate

Item	Unit	C.C.	BPST	Water
Inplant consumption	%	2.0	24.2	2.0
Export rate		0.98	0.758	0.98

Note: CC: Combined cycle
BPST: Back pressure steam turbine

Appendix 8.2 (1) Discounted total cost--Alternative 1

1994 constant, million of R.O.

Year	Foreign (1)	Local (2)	Not shadow priced, total (3) = (1) + (2)	Shadow priced, local (4) = (2) x (0.9)	Shadow priced, total (5) = (1) + (4)	Discount factor (8%) (6)	Not shadow priced, discounted total (7) = (3) x (6)	Shadow priced, discounted total (BP) (8) = (5) x (6)
Capital costs								
1994						1.00		
1995						0.93		
1996	25.96	6.96	32.92	6.26	32.22	0.86	28.22	27.63
1997	192.39	35.40	227.79	31.86	224.25	0.79	180.83	178.02
1998	29.07	27.23	56.30	24.51	53.58	0.74	41.38	39.38
1999	9.09	1.06	10.15	0.95	10.04	0.68	6.91	6.84
2000	78.44	5.95	84.39	5.36	83.80	0.63	53.18	52.81
2001	51.61	7.02	58.63	6.32	57.93	0.58	34.21	33.80
2002	12.84	0.66	13.50	0.59	13.43	0.54	7.29	7.26
2003	52.55	4.12	56.67	3.71	56.26	0.50	28.35	28.14
2004	79.77	5.87	85.64	5.28	85.05	0.46	39.67	39.40
2005	15.87	4.34	20.21	3.91	19.78	0.43	8.67	8.48
2006	69.61	4.58	74.19	4.12	73.73	0.40	29.46	29.28
2007	81.34	8.27	89.61	7.44	88.78	0.37	32.95	32.65
2008	70.64	8.18	78.82	7.36	78.00	0.34	26.84	26.56
2009	7.08	0.29	7.37	0.26	7.34	0.32	2.32	2.31
2010	0.00	0.00	0.00	0.00	0.00	0.29	0.00	0.00
Sub-total	776.26	119.93	896.19	107.94	884.20	9.85	520.28	512.54
Operating costs								
1994						1.00		
1995						0.93		
1996						0.86		
1997						0.79		
1998	0.14	3.53	3.67	3.18	3.31	0.74	2.69	2.44
1999	0.48	7.55	8.04	6.80	7.28	0.68	5.47	4.96
2000	0.80	12.06	12.86	10.85	11.65	0.63	8.10	7.34
2001	1.21	17.34	18.55	15.61	16.82	0.58	10.82	9.81
2002	1.69	22.52	24.21	20.27	21.96	0.54	13.08	11.86
2003	2.14	28.43	30.57	25.59	27.73	0.50	15.29	13.87
2004	2.62	34.68	37.30	31.22	33.83	0.46	17.28	15.67
2005	3.09	41.26	44.35	37.14	40.22	0.43	19.02	17.25
2006	3.59	46.58	50.17	41.92	45.51	0.40	19.92	18.07
2007	4.02	52.91	56.94	47.62	51.65	0.37	20.94	18.99
2008	4.50	59.46	63.95	53.51	58.01	0.34	21.77	19.75
2009	5.04	65.97	71.01	59.38	64.42	0.32	22.39	20.31
2010	5.56	73.21	78.78	65.89	71.46	0.29	22.99	20.86
Sub-total	34.87	465.52	500.39	418.97	453.84	9.85	199.78	181.18
Total								
1994						1.00		
1995						0.93		
1996	25.96	6.96	32.92	6.26	32.22	0.86	28.22	27.63
1997	192.39	35.40	227.79	31.86	224.25	0.79	180.83	178.02
1998	29.21	30.76	59.97	27.68	56.89	0.74	44.08	41.82
1999	9.57	8.61	18.19	7.75	17.33	0.68	12.38	11.79
2000	79.24	18.01	97.25	16.21	95.45	0.63	61.28	60.15
2001	52.82	24.36	77.18	21.93	74.74	0.58	45.03	43.61
2002	14.53	23.18	37.71	20.87	35.39	0.54	20.37	19.12
2003	54.69	32.55	87.24	29.29	83.98	0.50	43.64	42.01
2004	82.39	40.55	122.94	36.50	118.89	0.46	56.95	55.07
2005	18.96	45.60	64.56	41.04	60.00	0.43	27.69	25.73
2006	73.20	51.16	124.36	46.04	119.24	0.40	49.38	47.35
2007	85.36	61.18	146.55	55.06	140.43	0.37	53.88	51.64
2008	75.14	67.64	142.77	60.87	136.01	0.34	48.61	46.31
2009	12.12	66.26	78.38	59.64	71.76	0.32	24.71	22.62
2010	5.56	73.21	78.78	65.89	71.46	0.29	22.99	20.86
Grand total	811.13	585.45	1,396.58	526.91	1,338.04	9.85	720.05	693.72

Note: An average conversion factor (estimated) of 0.9 was applied to the local cost components.

Appendix 8.2 (2) Discounted total cost--Alternative 2

1994 constant, million of R.O.

Year	Foreign	Local	Not shadow priced, total	Shadow priced, local	Shadow priced, total	Discount factor (8%)	Not shadow priced, discounted total	Shadow priced, discounted total (BP)
	(1)	(2)	(3) = (1) + (2)	(4) = (2) x (0.9)	(5) = (1) + (4)	(6)	(7) = (3) x (6)	(8) = (5) x (6)
Capital costs								
1994						1.00		
1995						0.93		
1996	16.09	4.09	20.18	3.68	19.77	0.86	17.30	16.95
1997	126.86	21.52	148.38	19.37	146.23	0.79	117.79	116.08
1998	85.52	37.55	123.07	33.80	119.32	0.74	90.46	87.70
1999	23.65	1.65	25.30	1.49	25.14	0.68	17.22	17.11
2000	47.91	1.41	49.32	1.27	49.18	0.63	31.08	30.99
2001	45.60	10.28	55.88	9.25	54.85	0.58	32.61	32.01
2002	44.46	0.47	44.93	0.42	44.88	0.54	24.27	24.25
2003	27.19	1.89	29.08	1.70	28.89	0.50	14.55	14.45
2004	28.79	1.45	30.24	1.31	30.10	0.46	14.01	13.94
2005	77.90	11.70	89.60	10.53	88.43	0.43	38.43	37.93
2006	30.31	0.64	30.95	0.58	30.89	0.40	12.29	12.27
2007	54.13	3.11	57.24	2.80	56.93	0.37	21.05	20.93
2008	84.98	12.00	96.98	10.80	95.78	0.34	33.02	32.61
2009	24.66	0.41	25.07	0.37	25.03	0.32	7.90	7.89
2010	0.00	0.00	0.00	0.00	0.00	0.29	0.00	0.00
Sub-total	718.05	108.17	826.22	97.35	815.40	9.85	471.97	465.10
Operating costs								
1994						1.00		
1995						0.93		
1996						0.86		
1997						0.79		
1998	0.14	3.49	3.63	3.14	3.28	0.74	2.67	2.41
1999	0.68	7.08	7.76	6.37	7.05	0.68	5.28	4.80
2000	1.24	10.85	12.08	9.76	11.00	0.63	7.61	6.93
2001	1.99	15.03	17.02	13.53	15.52	0.58	9.93	9.05
2002	2.79	19.46	22.25	17.52	20.31	0.54	12.02	10.97
2003	3.63	24.17	27.80	21.75	25.38	0.50	13.91	12.70
2004	4.51	29.16	33.67	26.25	30.75	0.46	15.60	14.25
2005	5.38	34.40	39.78	30.96	36.34	0.43	17.06	15.59
2006	6.16	39.22	45.37	35.29	41.45	0.40	18.02	16.46
2007	6.97	44.30	51.27	39.87	46.84	0.37	18.85	17.22
2008	7.81	49.67	57.48	44.70	52.51	0.34	19.57	17.88
2009	8.70	55.33	64.03	49.80	58.50	0.32	20.19	18.44
2010	9.63	61.31	70.94	55.18	64.81	0.29	20.71	18.92
Sub-total	59.61	393.46	453.08	354.12	413.73	9.85	181.41	165.61
Total								
1994						1.00		
1995						0.93		
1996	16.09	4.09	20.18	3.68	19.77	0.86	17.30	16.95
1997	126.86	21.52	148.38	19.37	146.23	0.79	117.79	116.08
1998	85.66	41.04	126.70	36.94	122.59	0.74	93.13	90.11
1999	24.33	8.73	33.06	7.85	32.19	0.68	22.50	21.91
2000	49.15	12.26	61.40	11.03	60.18	0.63	38.69	37.92
2001	47.59	25.31	72.90	22.78	70.37	0.58	42.54	41.06
2002	47.25	19.93	67.18	17.94	65.19	0.54	36.30	35.22
2003	30.82	26.06	56.88	23.45	54.27	0.50	28.45	27.15
2004	33.30	30.61	63.91	27.55	60.85	0.46	29.60	28.19
2005	83.28	46.10	129.38	41.49	124.77	0.43	55.49	53.51
2006	36.47	39.86	76.32	35.87	72.34	0.40	30.31	28.73
2007	61.10	47.41	108.51	42.67	103.77	0.37	39.90	38.15
2008	92.79	61.67	154.46	55.50	148.29	0.34	52.59	50.49
2009	33.36	55.74	89.10	50.17	83.53	0.32	28.09	26.33
2010	9.63	61.31	70.94	55.18	64.81	0.29	20.71	18.92
Grand total	777.66	501.63	1,279.30	451.47	1,229.13	9.85	653.38	630.71

Appendix 8.2 (3) Discounted total cost--Alternative 3

1994 constant, million of R.O.

Year	Foreign	Local	Not shadow priced, total	Shadow priced, local	Shadow priced, total	Discount factor (8%)	Not shadow priced, discounted total	Shadow priced, discounted total (BP)
	(1)	(2)	(3) = (1) + (2)	(4) = (2) x (0.9)	(5) = (1) + (4)	(6)	(7) = (3) x (6)	(8) = (5) x (6)
Capital costs								
1994						1.00		
1995						0.93		
1996	38.70	7.94	46.64	7.15	45.85	0.86	39.99	39.31
1997	292.63	41.26	333.89	37.13	329.76	0.79	265.05	261.78
1998	42.18	30.21	72.39	27.19	69.37	0.74	53.21	50.99
1999	0.00	0.00	0.00	0.00	0.00	0.68	0.00	0.00
2000	0.00	0.00	0.00	0.00	0.00	0.63	0.00	0.00
2001	0.00	0.00	0.00	0.00	0.00	0.58	0.00	0.00
2002	3.65	0.02	3.67	0.02	3.67	0.54	1.98	1.98
2003	56.87	2.91	59.78	2.62	59.49	0.50	29.90	29.76
2004	183.28	16.93	200.21	15.24	198.52	0.46	92.74	91.95
2005	100.76	7.89	108.65	7.10	107.86	0.43	46.60	46.26
2006	1.43	0.35	1.78	0.32	1.75	0.40	0.71	0.69
2007	11.45	2.13	13.58	1.92	13.37	0.37	4.99	4.92
2008	1.44	1.05	2.49	0.95	2.39	0.34	0.85	0.81
2009	0.00	0.00	0.00	0.00	0.00	0.32	0.00	0.00
2010	0.00	0.00	0.00	0.00	0.00	0.29	0.00	0.00
Sub-total	732.39	110.69	843.08	99.62	832.01	9.85	536.02	528.44
Operating costs								
1994						1.00		
1995						0.93		
1996						0.86		
1997						0.79		
1998	0.14	3.53	3.67	3.18	3.31	0.74	2.69	2.44
1999	0.48	7.60	8.08	6.84	7.32	0.68	5.50	4.98
2000	0.81	12.01	12.82	10.81	11.61	0.63	8.08	7.32
2001	1.23	17.17	18.40	15.46	16.69	0.58	10.74	9.74
2002	1.67	22.64	24.31	20.38	22.05	0.54	13.14	11.91
2003	2.14	28.43	30.57	25.59	27.73	0.50	15.29	13.87
2004	2.60	34.79	37.39	31.31	33.91	0.46	17.32	15.71
2005	3.10	41.16	44.26	37.04	40.14	0.43	18.98	17.22
2006	3.56	46.82	50.38	42.14	45.70	0.40	20.01	18.15
2007	4.02	52.92	56.94	47.63	51.65	0.37	20.94	18.99
2008	4.51	59.33	63.85	53.40	57.91	0.34	21.74	19.72
2009	5.02	66.09	71.12	59.48	64.51	0.32	22.42	20.34
2010	5.56	73.21	78.78	65.89	71.46	0.29	22.99	20.86
Sub-total	34.85	465.71	500.55	419.13	453.98	9.85	199.83	181.22
Total								
1994						1.00		
1995						0.93		
1996	38.70	7.94	46.64	7.15	45.85	0.86	39.99	39.31
1997	292.63	41.26	333.89	37.13	329.76	0.79	265.05	261.78
1998	42.32	33.74	76.06	30.37	72.68	0.74	55.90	53.42
1999	0.48	7.60	8.08	6.84	7.32	0.68	5.50	4.98
2000	0.81	12.01	12.82	10.81	11.61	0.63	8.08	7.32
2001	1.23	17.17	18.40	15.46	16.69	0.58	10.74	9.74
2002	5.32	22.66	27.98	20.40	25.72	0.54	15.12	13.89
2003	59.01	31.34	90.35	28.20	87.21	0.50	45.20	43.63
2004	185.88	51.72	237.60	46.55	232.43	0.46	110.06	107.66
2005	103.86	49.05	152.91	44.14	148.00	0.43	65.58	63.47
2006	4.99	47.17	52.16	42.46	47.44	0.40	20.71	18.84
2007	15.47	55.05	70.52	49.54	65.01	0.37	25.93	23.91
2008	5.95	60.38	66.34	54.35	60.30	0.34	22.58	20.53
2009	5.02	66.09	71.12	59.48	64.51	0.32	22.42	20.34
2010	5.56	73.21	78.78	65.89	71.46	0.29	22.99	20.86
Grand total	767.24	576.40	1,343.63	518.76	1,285.99	9.85	735.84	709.67

Appendix 8.2 (4) Discounted total cost--Alternative 4

1994 constant, million of R.O.

Year	Foreign	Local	Not shadow priced, total	Shadow priced, local	Shadow priced, total	Discount factor (8%)	Not shadow priced, discounted total	Shadow priced, discounted total (BP)
	(1)	(2)	(3) = (1) + (2)	(4) = (2) x (0.9)	(5) = (1) + (4)	(6)	(7) = (3) x (6)	(8) = (5) x (6)
Capital costs								
1994						1.00		
1995						0.93		
1996	22.55	4.26	26.81	3.83	26.38	0.86	22.99	22.62
1997	183.20	23.56	206.76	21.20	204.40	0.79	164.13	162.26
1998	118.22	43.58	161.80	39.22	157.44	0.74	118.93	115.72
1999	0.00	0.00	0.00	0.00	0.00	0.68	0.00	0.00
2000	0.00	0.00	0.00	0.00	0.00	0.63	0.00	0.00
2001	3.65	0.02	3.67	0.02	3.67	0.58	2.14	2.14
2002	32.89	0.20	33.09	0.18	33.07	0.54	17.88	17.87
2003	17.43	0.77	18.20	0.69	18.12	0.50	9.10	9.07
2004	145.25	7.56	152.81	6.80	152.05	0.46	70.78	70.43
2005	153.58	15.94	169.52	14.35	167.93	0.43	72.70	72.02
2006	0.00	0.00	0.00	0.00	0.00	0.40	0.00	0.00
2007	0.00	0.00	0.00	0.00	0.00	0.37	0.00	0.00
2008	0.00	0.00	0.00	0.00	0.00	0.34	0.00	0.00
2009	0.00	0.00	0.00	0.00	0.00	0.32	0.00	0.00
2010	0.00	0.00	0.00	0.00	0.00	0.29	0.00	0.00
Sub-total	676.77	95.89	772.66	86.30	763.07	9.85	478.65	472.13
Operating costs								
1994						1.00		
1995						0.93		
1996						0.86		
1997						0.79		
1998	0.14	3.49	3.63	3.14	3.28	0.74	2.67	2.41
1999	0.68	7.08	7.76	6.37	7.05	0.68	5.28	4.80
2000	1.24	10.85	12.08	9.76	11.00	0.63	7.61	6.93
2001	1.99	15.03	17.02	13.53	15.52	0.58	9.93	9.05
2002	2.79	19.46	22.25	17.52	20.31	0.54	12.02	10.97
2003	3.63	24.17	27.80	21.75	25.38	0.50	13.91	12.70
2004	4.51	29.16	33.67	26.25	30.75	0.46	15.60	14.25
2005	5.38	34.40	39.78	30.96	36.34	0.43	17.06	15.59
2006	6.16	39.22	45.37	35.29	41.45	0.40	18.02	16.46
2007	6.97	44.30	51.27	39.87	46.84	0.37	18.85	17.22
2008	7.81	49.67	57.48	44.70	52.51	0.34	19.57	17.88
2009	8.70	55.33	64.03	49.80	58.50	0.32	20.19	18.44
2010	9.63	61.31	70.94	55.18	64.81	0.29	20.71	18.92
Sub-total	59.61	393.46	453.08	354.12	413.73	9.85	181.41	165.61
Total								
1994						1.00		
1995						0.93		
1996	22.55	4.26	26.81	3.83	26.38	0.86	22.99	22.62
1997	183.20	23.56	206.76	21.20	204.40	0.79	164.13	162.26
1998	118.36	47.07	165.43	42.37	160.72	0.74	121.60	118.14
1999	0.68	7.08	7.76	6.37	7.05	0.68	5.28	4.80
2000	1.24	10.85	12.08	9.76	11.00	0.63	7.61	6.93
2001	5.64	15.05	20.69	13.54	19.19	0.58	12.07	11.20
2002	35.68	19.66	55.34	17.70	53.38	0.54	29.90	28.84
2003	21.06	24.94	46.00	22.45	43.50	0.50	23.01	21.76
2004	149.76	36.72	186.48	33.05	182.81	0.46	86.38	84.68
2005	158.96	50.34	209.30	45.30	204.27	0.43	89.76	87.61
2006	6.16	39.22	45.37	35.29	41.45	0.40	18.02	16.46
2007	6.97	44.30	51.27	39.87	46.84	0.37	18.85	17.22
2008	7.81	49.67	57.48	44.70	52.51	0.34	19.57	17.88
2009	8.70	55.33	64.03	49.80	58.50	0.32	20.19	18.44
2010	9.63	61.31	70.94	55.18	64.81	0.29	20.71	18.92
Grand total	736.38	489.35	1,225.74	440.42	1,176.80	9.85	660.06	637.74

Appendix 8.3 Financial rate of return analysis

Thousand R.O.

Project year	0	1	2	3	4	5	6	7	8	9	10	11	12	13	14	15	16	17
Year	1996	1997	1998	1999	2000	2001	2002	2003	2004	2005	2006	2007	2008	2009	2010	2011	2012	2013
1. Electricity																		
A. Benefit (Revenue)																		
(a) Capacity																		
1 Power requirement at generation (MW)			106	202	304	413	529	652	783	921	1,050	1,185	1,329	1,480	1,640	1,700	1,700	1,700
2 Power requirement at sending-end (2% loss)			103	198	298	405	518	639	767	903	1,029	1,162	1,302	1,451	1,607	1,666	1,666	1,666
3 Power requirement at transmission-end (3% loss)			100	192	289	392	503	620	744	876	998	1,127	1,263	1,407	1,559	1,616	1,616	1,616
4 Total benefit at transmission-end @34.63 R.O./KW			3,475	6,643	9,999	13,589	17,404	21,458	25,767	30,325	34,553	39,019	43,738	48,724	53,993	55,968	55,968	55,968
(b) Energy																		
1 Energy requirement at generation (MWH)			475,898	913,345	1,376,776	1,872,470	2,399,234	2,959,055	3,554,049	4,183,412	4,767,198	5,383,898	6,035,450	6,723,916	7,451,482	7,744,569	7,744,569	7,744,569
2 Energy requirement at sending-end (2% loss)			466,380	895,078	1,349,240	1,835,021	2,351,249	2,899,873	3,482,968	4,099,744	4,671,854	5,276,220	5,914,741	6,589,438	7,302,452	7,589,677	7,589,677	7,589,677
3 Energy requirement at transmission-end (3% loss)			452,388	868,226	1,308,763	1,779,970	2,280,712	2,812,877	3,378,479	3,976,752	4,531,699	5,117,933	5,737,299	6,391,755	7,083,379	7,361,987	7,361,987	7,361,987
4 Total benefit at transmission-end @0.01145 R.O./KWH			5,180	9,941	14,985	20,381	26,114	32,207	38,684	45,534	51,888	58,600	65,692	73,186	81,105	84,295	84,295	84,295
Sub-total			8,654	16,584	24,984	33,970	43,518	53,666	64,451	75,859	86,441	97,620	109,430	121,910	135,098	140,263	140,263	140,263
B. Cost																		
(a) Capital cost																		
Foreign	15,160	114,110	19,540	23,650	42,350	12,570	44,460	27,190	23,230	44,870	30,310	48,570	51,950	24,660	0	0	0	0
Local	2,950	12,890	13,800	1,650	300	360	470	1,890	340	1,780	640	2,000	2,080	410	0	0	0	0
Total	18,110	127,000	33,340	25,300	42,650	12,930	44,930	29,080	23,570	46,650	30,950	50,570	54,030	25,070	0	0	0	0
(b) Operating cost																		
Foreign			138	265	399	543	696	858	1,031	1,213	1,382	1,561	1,750	1,950	2,161	2,246	2,246	2,246
Local			3,493	6,704	10,106	13,744	17,610	21,719	26,087	30,706	34,991	39,518	44,300	49,354	54,694	56,845	56,845	56,845
Total			3,631	6,969	10,505	14,287	18,306	22,578	27,117	31,919	36,374	41,079	46,050	51,303	56,855	59,091	59,091	59,091
Sub-total	18,110	127,000	36,971	32,269	53,155	27,217	63,236	51,658	50,687	78,569	67,324	91,649	100,080	76,373	56,855	59,091	59,091	59,091
C. Net benefit (A - B)	-18,110	-127,000	-28,317	-15,685	-28,171	6,753	-19,718	2,008	13,763	-2,710	19,117	5,971	9,350	45,536	78,243	81,172	81,172	81,172
D. Net present value	-18,110	-117,593	-24,277	-12,451	-20,706	4,596	-12,426	1,172	7,436	-1,356	8,855	2,561	3,713	16,744	26,639	25,589	23,693	21,938
8% discount rate	1.00	0.93	0.86	0.79	0.74	0.68	0.63	0.58	0.54	0.50	0.46	0.43	0.40	0.37	0.34	0.32	0.29	0.27
E. Cumulative NPV	-18,110	-135,703	-159,980	-172,431	-193,137	-188,541	-200,967	-199,796	-192,360	-193,715	-184,860	-182,300	-178,587	-161,843	-135,204	-109,616	-85,922	-63,984

F. FRR 10%

Project year	18	19	20	21	22	23	24	25	26	27	28	29	30	31	32	33	
Year	2014	2015	2016	2017	2018	2019	2020	2021	2022	2023	2024	2025	2026	2027	2028	2029	Total
1. Electricity																	
A. Benefit (Revenue)																	
(a) Capacity																	
1 Power requirement at generation (MW)	1,700	1,700	1,700	1,700	1,524	1,343	1,255	1,167	1,075	986	806	718	629	449	361	180	32,985
2 Power requirement at sending-end (2% loss)	1,666	1,666	1,666	1,666	1,493	1,316	1,230	1,143	1,053	967	790	703	617	440	353	177	32,325
3 Power requirement at transmission-end (3% loss)	1,616	1,616	1,616	1,616	1,448	1,277	1,193	1,109	1,021	938	766	682	598	427	343	171	31,356
4 Total benefit at transmission-end @34.63 R.O./KW	55,968	55,968	55,968	55,968	50,153	44,217	41,310	38,402	35,374	32,466	26,530	23,623	20,715	14,779	11,872	5,936	1,085,843
(b) Energy																	
1 Energy requirement at generation (MWH)	7,744,569	7,744,569	7,744,569	7,744,569	6,939,938	6,118,545	5,716,229	5,313,914	4,894,836	4,492,520	3,671,127	3,268,812	2,866,496	2,045,103	1,642,787	821,394	150,099,866
2 Energy requirement at sending-end (2% loss)	7,589,677	7,589,677	7,589,677	7,589,677	6,801,140	5,996,174	5,601,905	5,207,636	4,796,939	4,402,670	3,597,704	3,203,435	2,809,166	2,004,201	1,609,932	804,966	147,097,869
3 Energy requirement at transmission-end (3% loss)	7,361,987	7,361,987	7,361,987	7,361,987	6,597,105	5,816,289	5,433,848	5,051,407	4,653,031	4,270,590	3,489,773	3,107,332	2,724,891	1,944,075	1,561,634	780,817	142,684,933
4 Total benefit at transmission-end @0.01145 R.O./KWH	84,295	84,295	84,295	84,295	75,537	66,597	62,218	57,839	53,277	48,898	39,958	35,579	31,200	22,260	17,881	8,940	1,633,742
Sub-total	140,263	140,263	140,263	140,263	125,690	110,814	103,527	96,241	88,651	81,365	66,488	59,202	51,915	37,039	29,753	14,876	2,719,585
B. Cost																	
(a) Capital cost																	
Foreign	0	0	0	0	0	0	0	0	0	0	0	0	0	0	0	0	522,620
Local	0	0	0	0	0	0	0	0	0	0	0	0	0	0	0	0	41,560
Total	0	0	0	0	0	0	0	0	0	0	0	0	0	0	0	0	564,180
(b) Operating cost																	
Foreign	2,246	2,246	2,246	2,246	2,013	1,774	1,658	1,541	1,420	1,303	1,065	948	831	593	476	238	43,529
Local	56,845	56,845	56,845	56,845	50,939	44,910	41,957	39,004	35,928	32,975	26,946	23,993	21,040	15,011	12,058	6,029	1,101,733
Total	59,091	59,091	59,091	59,091	52,952	46,684	43,615	40,545	37,348	34,278	28,011	24,941	21,871	15,604	12,534	6,267	1,145,262
Sub-total	59,091	59,091	59,091	59,091	52,952	46,684	43,615	40,545	37,348	34,278	28,011	24,941	21,871	15,604	12,534	6,267	1,709,442
C. Net benefit (A - B)	81,172	81,172	81,172	81,172	72,738	64,129	59,912	55,696	51,303	47,087	38,478	34,261	30,044	21,435	17,218	8,609	1,010,143
D. Net present value	20,313	18,808	17,415	16,125	13,380	10,922	9,448	8,133	6,936	5,895	4,460	3,677	2,986	1,972	1,467	679	78,633
8% discount rate	0.25	0.23	0.21	0.20	0.18	0.17	0.16	0.15	0.14	0.13	0.12	0.11	0.10	0.09	0.09	0.08	
E. Cumulative NPV	-43,671	-24,863	-7,447	8,678	22,057	32,980	42,428	50,560	57,497	63,391	67,851	71,529	74,514	76,487	77,954	78,633	

Project year	0	1	2	3	4	5	6	7	8	9	10	11	12	13	14	15	16	17
Year	1996	1997	1998	1999	2000	2001	2002	2003	2004	2005	2006	2007	2008	2009	2010	2011	2012	2013
2. Water																		
A. Benefit (Revenue)																		
(a) Capacity																		
1. Production requirement (m3/d)				10,131	20,224	34,999	50,500	66,764	83,829	100,525	115,089	130,298	146,183	162,779	180,122	180,122	180,122	180,122
2. Capacity requirement (20% for peak demand)				12,157	24,269	41,999	60,600	80,117	100,595	120,630	138,107	156,357	175,420	195,335	216,147	216,147	216,147	216,147
3. Capacity requirement at sending-end (2% loss)				11,914	23,784	41,159	59,388	78,515	98,583	118,217	135,345	153,230	171,912	191,429	211,824	211,824	211,824	211,824
4. Capacity requirement at transmission-end (0% loss)				11,914	23,784	41,159	59,388	78,515	98,583	118,217	135,345	153,230	171,912	191,429	211,824	211,824	211,824	211,824
5. Total benefit at transmission-end @219.34 R.O./m3/d				2,613	5,217	9,028	13,026	17,221	21,623	25,930	29,687	33,610	37,707	41,988	46,461	46,461	46,461	46,461
(b) Production																		
1. Production requirement (m3)				3,697,646	7,381,897	12,774,673	18,432,633	24,368,973	30,597,635	36,691,625	42,007,505	47,558,693	53,356,893	59,414,511	65,744,704	74,948,972	74,948,972	74,948,972
2. Production requirement at sending-end (-2%)				3,623,693	7,234,259	12,519,179	18,063,981	23,881,593	29,985,682	35,957,793	41,167,355	46,607,519	52,289,755	58,226,221	64,429,809	73,449,993	73,449,993	73,449,993
3. Production requirement at transmission-end (-0%)				3,623,693	7,234,259	12,519,179	18,063,981	23,881,593	29,985,682	35,957,793	41,167,355	46,607,519	52,289,755	58,226,221	64,429,809	73,449,993	73,449,993	73,449,993
4. Total benefit at transmission-end @0.443 R.O./m3				1,605	3,205	5,546	8,002	10,580	13,284	15,929	18,237	20,647	23,164	25,794	28,542	32,538	32,538	32,538
Sub-total				4,218	8,422	14,574	21,029	27,801	34,907	41,859	47,924	54,257	60,871	67,782	75,004	79,000	79,000	79,000
B. Cost																		
(a) Capital cost																		
Foreign	930	12,750	65,980	0	5,560	33,030	0	0	5,560	33,030	0	5,560	33,030	0	0	0	0	0
Local	1,140	8,630	23,750	0	1,110	9,920	0	0	1,110	9,920	0	1,110	9,920	0	0	0	0	0
Total	2,070	21,380	89,730	0	6,670	42,950	0	0	6,670	42,950	0	6,670	42,950	0	0	0	0	0
(b) Operating cost																		
Foreign				422	843	1,459	2,105	2,783	3,494	4,190	4,797	5,431	6,093	6,785	7,507	8,558	8,558	8,558
Local				372	742	1,285	1,854	2,451	3,078	3,690	4,225	4,783	5,367	5,976	6,613	7,538	7,538	7,538
Total				794	1,585	2,744	3,959	5,234	6,571	7,880	9,022	10,214	11,459	12,760	14,120	16,097	16,097	16,097
Sub-total	2,070	21,380	89,730	794	8,255	45,694	3,959	5,234	13,241	50,830	9,022	16,884	54,409	12,760	14,120	16,097	16,097	16,097
C. Net benefit (A - B)	-2,070	-21,380	-89,730	3,424	166	-31,120	17,070	22,567	21,665	-8,971	38,902	37,372	6,462	55,022	60,884	62,903	62,903	62,903
D. Net present value	-2,070	-19,796	-76,929	2,718	122	-21,180	10,757	13,168	11,705	-4,488	18,019	16,028	2,566	20,231	20,729	19,830	18,361	17,001
8% discount rate	1.00	0.93	0.86	0.79	0.74	0.68	0.63	0.58	0.54	0.50	0.46	0.43	0.40	0.37	0.34	0.32	0.29	0.27
E. Cumulative NPV	-2,070	-21,866	-98,795	-96,077	-95,955	-117,135	-106,378	-93,210	-81,505	-85,993	-67,974	-51,945	-49,379	-29,148	-8,419	11,411	29,771	46,772

F. FRR: 17%

Project year	18	19	20	21	22	23	24	25	26	27	28	29	30	31	32	33	
Year	2014	2015	2016	2017	2018	2019	2020	2021	2022	2023	2024	2025	2026	2027	2028	2029	Total
2. Water																	
A. Benefit (Revenue)																	
(a) Capacity																	
1. Production requirement (m3/d)	180,122	180,122	180,122	180,122	180,122	183,283	183,283	183,283	1,221,892	1,221,892	1,221,892	61,094	61,094	61,094	61,094	0	7,002,327
2. Capacity requirement (20% for peak demand)	216,147	216,147	216,147	216,147	216,147	152,736	152,736	152,736	1,018,243	1,018,243	1,018,243	50,912	50,912	50,912	50,912	0	6,767,495
3. Capacity requirement at sending-end (2% loss)	211,824	211,824	211,824	211,824	211,824	149,681	149,681	149,681	997,878	997,878	997,878	49,894	49,894	49,894	49,894	0	6,632,145
4. Capacity requirement at transmission-end (0% loss)	211,824	211,824	211,824	211,824	211,824	149,681	149,681	149,681	997,878	997,878	997,878	49,894	49,894	49,894	49,894	0	6,632,145
5. Total benefit at transmission-end @219.34 R.O./m3/d	46,461	46,461	46,461	46,461	46,461	32,831	32,831	32,831	218,875	218,875	218,875	10,944	10,944	10,944	10,944	0	1,454,695
(b) Production																	
1. Production requirement (m3)	74,948,972	74,948,972	74,948,972	74,948,972	74,948,972	63,553,450	63,553,450	63,553,450	423,690,912	423,690,912	423,690,912	21,184,483	21,184,483	21,184,483	21,184,483	0	2,548,090,183
2. Production requirement at sending-end (-2%)	73,449,993	73,449,993	73,449,993	73,449,993	73,449,993	62,282,381	62,282,381	62,282,381	415,217,094	415,217,094	415,217,094	20,760,794	20,760,794	20,760,794	20,760,794	0	2,497,128,379
3. Production requirement at transmission-end (-0%)	73,449,993	73,449,993	73,449,993	73,449,993	73,449,993	62,282,381	62,282,381	62,282,381	415,217,094	415,217,094	415,217,094	20,760,794	20,760,794	20,760,794	20,760,794	0	2,497,128,379
4. Total benefit at transmission-end @0.443 R.O./m3	32,538	32,538	32,538	32,538	32,538	27,591	27,591	27,591	183,941	183,941	183,941	9,197	9,197	9,197	9,197	0	1,106,228
Sub-total	79,000	79,000	79,000	79,000	79,000	60,422	60,422	60,422	402,816	402,816	402,816	20,141	20,141	20,141	20,141	0	2,560,923
B. Cost																	
(a) Capital cost																	
Foreign	0	0	0	0	0	0	0	0	0	0	0	0	0	0	0	0	195,430
Local	0	0	0	0	0	0	0	0	0	0	0	0	0	0	0	0	66,610
Total	0	0	0	0	0	0	0	0	0	0	0	0	0	0	0	0	262,040
(b) Operating cost																	
Foreign	8,558	8,558	8,558	8,558	8,558	7,257	7,257	7,257	48,381	48,381	48,381	2,419	2,419	2,419	2,419	0	290,966
Local	7,538	7,538	7,538	7,538	7,538	6,392	6,392	6,392	42,615	42,615	42,615	2,131	2,131	2,131	2,131	0	256,287
Total	16,097	16,097	16,097	16,097	16,097	13,649	13,649	13,649	90,996	90,996	90,996	4,550	4,550	4,550	4,550	0	547,253
Sub-total	16,097	16,097	16,097	16,097	16,097	13,649	13,649	13,649	90,996	90,996	90,996	4,550	4,550	4,550	4,550	0	809,293
C. Net benefit (A - B)	62,903	62,903	62,903	62,903	62,903	46,773	46,773	46,773	311,820	311,820	311,820	15,591	15,591	15,591	15,591	0	1,751,629
D. Net present value	15,741	14,575	13,496	12,496	11,570	7,966	7,376	6,830	42,159	39,036	36,144	1,673	1,549	1,435	1,328	0	260,147
8% discount rate	0.25	0.23	0.21	0.20	0.18	0.17	0.16	0.15	0.14	0.13	0.12	0.11	0.10	0.09	0.09	0.08	
E. Cumulative NPV	62,514	77,089	90,585	103,081	114,651	122,617	129,993	136,823	178,982	218,017	254,162	255,835	257,384	258,819	260,147	260,147	

	Project year	0	1	2	3	4	5	6	7	8	9	10	11	12	13	14	15	16	17
	Year	1996	1997	1998	1999	2000	2001	2002	2003	2004	2005	2006	2007	2008	2009	2010	2011	2012	2013
3. Total (Electricity and Water)																			
A. Total benefit		0	0	8,654	20,802	33,406	48,543	64,547	81,467	99,358	117,718	134,365	151,876	170,302	189,692	210,102	219,263	219,263	219,263
B. Total cost																			
(a) Capital cost																			
Foreign		16,090	126,860	85,520	23,650	47,910	45,600	44,460	27,190	28,790	77,900	30,310	54,130	84,980	24,660	0	0	0	0
Local		4,090	21,520	37,550	1,650	1,410	10,280	470	1,890	1,450	11,700	640	3,110	12,000	410	0	0	0	0
Total		20,180	148,380	123,070	25,300	49,320	55,880	44,930	29,080	30,240	89,600	30,950	57,240	96,980	25,070	0	0	0	0
(b) Operating cost																			
Foreign		0	0	138	687	1,242	2,002	2,801	3,641	4,525	5,403	6,179	6,992	7,843	8,734	9,668	10,804	10,804	10,804
Local		0	0	3,493	7,076	10,848	15,029	19,464	24,170	29,164	34,397	39,216	44,301	49,667	55,329	61,306	64,384	64,384	64,384
Total		0	0	3,631	7,763	12,090	17,031	22,265	27,811	33,689	39,800	45,396	51,293	57,510	64,064	70,975	75,188	75,188	75,188
Sub-total		20,180	148,380	126,701	33,063	61,410	72,911	67,195	56,891	63,929	129,400	76,346	108,533	154,490	89,134	70,975	75,188	75,188	75,188
C. Net benefit (A - B)		-20,180	-148,380	-118,047	-12,261	-28,004	-24,367	-2,648	24,575	35,429	-11,682	58,019	43,343	15,812	100,558	139,127	144,075	144,075	144,075
D. Net present value		-20,180	-137,389	-101,206	-9,733	-20,584	-16,584	-1,669	14,339	19,141	-5,344	26,874	18,589	6,279	36,975	47,367	45,418	42,054	38,939
8% discount rate		1.00	0.93	0.86	0.79	0.74	0.68	0.63	0.58	0.54	0.50	0.46	0.43	0.40	0.37	0.34	0.32	0.29	0.27
E. Cumulative NPV		-20,180	-157,569	-258,775	-268,508	-289,092	-305,676	-307,345	-293,005	-273,864	-279,708	-252,834	-234,245	-227,966	-190,991	-143,623	-98,205	-56,151	-17,212

F. FRR 13%

	Project year	18	19	20	21	22	23	24	25	26	27	28	29	30	31	32	33	
	Year	2014	2015	2016	2017	2018	2019	2020	2021	2022	2023	2024	2025	2026	2027	2028	2029	Total
3. Total (Electricity and Water)																		
A. Total benefit		219,263	219,263	219,263	219,263	204,690	171,236	163,949	156,663	491,467	484,180	469,304	79,343	72,056	57,180	49,893	14,876	5,280,508
B. Total cost																		
(a) Capital cost																		
Foreign		0	0	0	0	0	0	0	0	0	0	0	0	0	0	0	0	718,050
Local		0	0	0	0	0	0	0	0	0	0	0	0	0	0	0	0	108,170
Total		0	0	0	0	0	0	0	0	0	0	0	0	0	0	0	0	826,220
(b) Operating cost																		
Foreign		10,804	10,804	10,804	10,804	10,571	9,032	8,915	8,798	49,801	49,684	49,446	3,367	3,250	3,012	2,895	238	334,495
Local		64,384	64,384	64,384	64,384	58,478	51,302	48,349	45,396	78,543	75,590	69,561	26,124	23,171	17,142	14,189	6,029	1,358,020
Total		75,188	75,188	75,188	75,188	69,049	60,334	57,264	54,195	128,344	125,274	119,007	29,491	26,421	20,154	17,084	6,267	1,692,515
Sub-total		75,188	75,188	75,188	75,188	69,049	60,334	57,264	54,195	128,344	125,274	119,007	29,491	26,421	20,154	17,084	6,267	2,518,735
C. Net benefit (A - B)		144,075	144,075	144,075	144,075	135,641	110,902	106,685	102,469	363,123	358,906	350,297	49,852	45,635	37,026	32,809	8,609	2,761,772
D. Net present value		36,055	33,384	30,911	28,621	24,950	18,888	16,824	14,962	49,095	44,930	40,604	5,350	4,535	3,407	2,795	679	338,780
8% discount rate		0.25	0.23	0.21	0.20	0.18	0.17	0.16	0.15	0.14	0.13	0.12	0.11	0.10	0.09	0.09	0.08	
E. Cumulative NPV		18,843	52,226	83,137	111,759	136,709	155,597	172,421	187,383	236,478	281,409	322,013	327,363	331,898	335,305	338,101	338,780	

Note: The salvage value at the end of the economic life is minimum, and therefore is disregarded.

Appendix 8.4 Sensitivity analysis for FRR

	Discount rate		
	7%	9%	10%
Power (R.O.)			
LRMC at generation	28.27	32.74	35.25
LRMC at transmission-end	31.97	37.26	40.19
Water (R.O.)			
LRMC at production	180.86	210.62	205.98
LRMC at transmission-end	201.99	237.2	255.35
Net benefit (Thousand R.O.)			
Electricity	926,737	1,092,608	1,184,480
Water	1,636,561	1,870,079	1,990,453
Total	2,563,299	2,962,688	3,174,933
FRR			
Electricity	**10%**	**11%**	**11%**
Water	**16%**	**17%**	**18%**
Total	**13%**	**13%**	**14%**

Appendix 8.5 Construction Costs (Stage 1)

Million R.O.

Item	Year											
	1996			1997			1998			Total		
	FC	LC	TC	FC	LC	TC	FC	LC	TC	FC	LC	TC
A Power Plant												
1. Civil Work--Stage 1 share	0.21	0.29	0.51	0.85	1.46	2.31	0.24	1.18	1.42	1.30	2.94	4.23
(excluding foundations and powe	(0.56)	(0.76)	(1.32)	(2.21)	(3.79)	5.99	(0.61)	(3.08)	(3.69)	(3.37)	(7.63)	(11.01)
2. Foundation and power house	0.15	0.17	0.32	0.58	1.47	2.05				0.73	1.64	2.37
	(0.39)	(0.44)	0.83	(1.51)	(3.82)	(5.33)				(1.90)	(4.27)	(6.16)
3. Equipment & erection	9.40	0.08	9.48	77.52	0.52	78.04	7.07	0.30	7.37	93.99	0.90	94.89
	(24.45)	(0.20)	(24.64)	(201.61)	(1.36)	(202.98)	(18.39)	(0.78)	(19.17)	(244.45)	(2.34)	(246.79)
4. Transmission facilities--Stage 1 sh	0.96	0.27	1.24	6.71	0.83	7.55	1.94	1.62	3.55	9.61	2.72	12.34
	(2.50)	(0.71)	(3.21)	(17.46)	(2.17)	(19.63)	(5.04)	(4.20)	(9.24)	(25.00)	(7.08)	(32.08)
5. Total cost for Stage 1	10.73	0.81	11.54	85.66	4.29	89.95	9.24	3.10	12.34	105.63	8.20	113.83
	(27.90)	(2.11)	(30.01)	(222.79)	(11.14)	(233.93)	(24.04)	(8.06)	(32.10)	(274.72)	(21.32)	(296.04)
B Desalination Plant												
1. Civil work stage--1 share	0.23	0.28	0.51	0.93	1.67	2.60	0.39	1.50	1.89	1.55	3.45	5.00
(excluding foundations)	(0.60)	(0.73)	(1.33)	(2.42)	(4.34)	(6.76)	(1.01)	(3.90)	(4.92)	(4.03)	(8.97)	(13.00)
2. Foundation				0.20	0.44	0.64	1.79	4.02	5.81	1.99	4.46	6.45
				(0.52)	(1.14)	(1.66)	(4.66)	(10.46)	(15.11)	(5.18)	(11.60)	(16.78)
3. Equipment and erection				5.33	0.51	5.84	30.87	4.50	35.37	36.20	5.01	41.21
				(13.86)	(1.33)	(15.19)	(80.29)	(11.70)	(91.99)	(94.15)	(13.03)	(107.18)
4. Transmission facilities--Stage 1 share				0.92	0.37	1.29	8.23	3.35	11.58	9.15	3.72	12.87
				(2.39)	(0.96)	(3.36)	(21.40)	(8.71)	(30.12)	(23.80)	(9.67)	(33.47)
5. Total cost for Stage 1	0.23	0.28	0.51	7.38	2.99	10.37	41.28	13.37	54.65	48.89	16.64	65.53
	(0.60)	(0.73)	(1.33)	(19.19)	(7.78)	(26.97)	(107.36)	(34.77)	(142.13)	(127.15)	(43.28)	(170.43)
C Total construction cost	10.96	1.09	12.05	93.04	7.28	100.32	50.52	16.47	66.99	154.52	24.84	**179.36**
	(28.49)	(2.84)	(31.33)	(241.98)	(18.92)	260.90	(131.40)	(42.83)	(174.23)	(401.88)	(64.59)	(466.47)

Note: 1 ( ) Million US$
US$= 0.3845 O.R.
2 Costs include physical contingencies, engineering fees and administration expenses.

Appendix 8.6 Investment costs disbursement and flow financial resources--power plant

Million US$

	Project year	0			1			2			Total		
	Year	1996			1997			1998					
		FC	LC	TC	FC	LC	TC	FC	LC	TC	FC	LC	TC
A	*Fixed assets*												
	(1) Construction costs (including physical contingencies, engineering fees and administration costs)	27.90	2.11	30.01	222.79	11.14	233.93	24.04	8.06	32.10	274.72	21.32	296.04
	(2) Interest on loan accrued 8%	0.59	0.04	0.63	5.88	0.32	6.21	11.32	0.74	12.06	17.79	1.11	18.90
	Sub-total	28.48	2.16	30.64	228.67	11.47	240.14	35.36	8.80	44.16	292.51	22.43	314.94
B	Net working capital	0	0	0	0	0	0	0	0	0	0	0	0
C	Total initial investment (A + B)	28.48	2.16	30.64	228.67	11.47	240.14	35.36	8.80	44.16	292.51	22.43	314.94
D	Total price contingencies 3%	0.85	0.06	0.92	6.86	0.34	7.20	1.06	0.26	1.32	8.78	0.67	9.45
E	Total finance required (C + D)	29.34	2.22	31.56	235.53	11.81	247.34	36.42	9.07	45.48	301.28	23.10	**324.39**
	(Financial resources)												
F	Equity capital	14.67	1.11	15.78	117.76	5.91	123.67	18.21	4.53	22.74	150.64	11.55	**162.19**
	Cumulative	14.67	1.11	15.78	132.43	7.02	139.45	150.64	11.55	162.19			
G	Commercial bank loan	14.67	1.11	15.78	117.76	5.91	123.67	18.21	4.53	22.74	150.64	11.55	**162.19**
	Interest 8%												
	Cumulative	14.67	1.11	15.78	132.43	7.02	139.45	150.64	11.55	162.19			
H	Total finance	29.34	2.22	31.56	235.53	11.81	247.34	36.42	9.07	45.48	301.28	23.10	324.39
	Cumulative	29.34	2.22	31.56	264.87	14.03	278.90	301.28	23.10	324.39			

Note: 1 Equity-loan ratio
Equity: 50%
Loan: 50%
2 Computation of interest
Cumulative debt x 8% + new debt x 4%
3 No working capital nor pre-operation expenditures assumed.

Appendix 8.7 Investment costs disbursement and flow of financial resources--desalination plant

Million US$

Project year	0			1			2			Total		
Year	1996			1997			1998					
	FC	LC	TC	FC	LC	TC	FC	LC	TC	FC	LC	TC
A Fixed assets												
(1) Construction costs (including physical contingencies, engineering fees and administration costs)	0.60	0.73	1.33	19.19	7.78	26.97	107.36	34.77	142.13	127.15	43.28	170.43
(2) Interest on loan accrued 8%	0.01	0.02	0.03	0.43	0.19	0.62	3.11	1.10	4.21	3.55	1.31	4.86
Sub-total	0.61	0.74	1.35	19.62	7.97	27.59	110.47	35.87	146.34	130.70	44.58	175.29
B Net working capital	0	0	0	0	0	0	0	0	0	0	0	0
C Total initial investment (A + B)	0.61	0.74	1.35	19.62	7.97	27.59	110.47	35.87	146.34	130.70	44.58	175.29
D Total price contingencies 3%	0.02	0.02	0.04	0.59	0.24	0.83	3.31	1.08	4.39	3.92	1.34	5.26
E Total finance required (C + D)	0.63	0.77	1.39	20.21	8.21	28.42	113.78	36.95	150.73	134.62	45.92	**180.55**
(Financial resources)												
F Equity capital	0.31	0.38	0.70	10.11	4.11	14.21	56.89	18.47	75.36	67.31	22.96	**90.27**
Cumulative	0.31	0.38	0.70	10.42	4.49	14.91	67.31	22.96	90.27			
G Commercial bank loan	0.31	0.38	0.70	10.11	4.11	14.21	56.89	18.47	75.36	67.31	22.96	**90.27**
Interest 8%												
Cumulative	0.31	0.38	0.70	10.42	4.49	14.91	67.31	22.96	90.27			
H Total finance	0.63	0.77	1.39	20.21	8.21	28.42	113.78	36.95	150.73	134.62	45.92	180.55
Cumulative	0.63	0.77	1.39	20.84	8.98	29.82	134.62	45.92	180.55			

Note: 1 Equity-loan ratio
Equity: 50%
Loan: 50%
2 Computation of interest
Cumulative debt x 8% + new debt x 4%
3 *No working capital nor pre-operation expenditures assumed.*

Appendix 8.8 Projected cash flow before debt service (operation period) 1998-2018

Thousand US$

Project year			0	1	2	3	4	5	6	7	8	9	10	11	12	13	14	15	16	17	18	19	20	21	22	
Year	1994	1995	1996	1997	1998	1999	2000	2001	2002	2003	2004	2005	2006	2007	2008	2009	2010	2011	2012	2013	2014	2015	2016	2017	2018	Total
1. Electricity																										
Installed capacity (MW)					192	292	292	292	292	292	292	292	292	292	292	292	292	292	292	292	292	292	292	292	100	
Available capacity (92%)					177	269	269	269	269	269	269	269	269	269	269	269	269	269	269	269	269	269	269	269	92	
A. Operating income																										
(a) Capacity																										
1 Power requirement at generation (MW)					177	269	269	269	269	269	269	269	269	269	269	269	269	269	269	269	269	269	269	269	92	
2 Power requirement at sending-end (2% loss)					173	263	263	263	263	263	263	263	263	263	263	263	263	263	263	263	263	263	263	263	90	
3 Power requirement at transmission-end (3% loss)					168	255	255	255	255	255	255	255	255	255	255	255	255	255	255	255	255	255	255	255	87	
4 Unit charge ($/KW)	90.07	92.77	95.55	98.42	101.37	104.41	107.54	110.77	114.09	117.51	121.04	124.67	128.41	132.26	136.23	140.32	144.53	148.86	153.33	157.93	162.67	167.55	172.57	177.75	183.08	
90.07 in 1994																										
5 Total charge at transmission-end					17,021	26,663	27,463	28,287	29,135	30,010	30,910	31,837	32,792	33,776	34,789	35,833	36,908	38,015	39,156	40,330	41,540	42,786	44,070	45,392	16,012	702,727
(b) Energy																										
1 Energy requirement at generation (MWH)					1,083,156	1,647,300	1,647,300	1,647,300	1,647,300	1,647,300	1,647,300	1,647,300	1,647,300	1,647,300	1,647,300	1,647,300	1,647,300	1,647,300	1,647,300	1,647,300	1,647,300	1,647,300	1,647,300	1,647,300	564,144	32,946,010
2 Energy requirement at sending-end (2% loss)					1,061,493	1,614,354	1,614,354	1,614,354	1,614,354	1,614,354	1,614,354	1,614,354	1,614,354	1,614,354	1,614,354	1,614,354	1,614,354	1,614,354	1,614,354	1,614,354	1,614,354	1,614,354	1,614,354	1,614,354	552,861	32,287,089
3 Energy requirement at transmission-end (3% loss)					1,029,649	1,565,924	1,565,924	1,565,924	1,565,924	1,565,924	1,565,924	1,565,924	1,565,924	1,565,924	1,565,924	1,565,924	1,565,924	1,565,924	1,565,924	1,565,924	1,565,924	1,565,924	1,565,924	1,565,924	536,275	31,318,477
4 Unit charge ($/KWH)	0.03	0.03	0.03	0.03	0.03	0.03	0.04	0.04	0.04	0.04	0.04	0.04	0.04	0.04	0.05	0.05	0.05	0.05	0.05	0.05	0.05	0.06	0.06	0.06	0.06	
0.02978 in 1994																										
5 Total charge at transmission-end					34,510	54,059	55,680	57,351	59,071	60,844	62,669	64,549	66,485	68,480	70,534	72,650	74,830	77,075	79,387	81,769	84,222	86,748	89,351	92,031	32,463	1,424,759
Total income					51,531	80,722	83,144	85,638	88,207	90,853	93,579	96,386	99,278	102,256	105,324	108,483	111,738	115,090	118,543	122,099	125,762	129,535	133,421	137,424	48,475	2,127,486
B. Operating expenditure																										
Foreign					1,807	2,831	2,916	3,003	3,093	3,186	3,282	3,380	3,482	3,586	3,694	3,805	3,919	4,036	4,157	4,282	4,411	4,543	4,679	4,820	1,709	74,613
Local					24,255	37,995	39,135	40,309	41,518	42,763	44,046	45,368	46,729	48,131	49,575	51,062	52,594	54,171	55,797	57,471	59,195	60,970	62,800	64,684	22,816	1,001,382
Total expenditure					26,062	40,826	42,051	43,312	44,611	45,950	47,328	48,748	50,211	51,717	53,268	54,866	56,512	58,208	59,954	61,753	63,605	65,513	67,479	69,503	24,517	1,075,995
C. Net operating income (A - B)					25,469	39,896	41,093	42,326	43,596	44,903	46,250	47,638	49,067	50,539	52,055	53,617	55,225	56,882	58,589	60,346	62,157	64,021	65,942	67,920	23,958	1,051,492
	1994	1995	1996	1997	1998	1999	2000	2001	2002	2003	2004	2005	2006	2007	2008	2009	2010	2011	2012	2013	2014	2015	2016	2017	2018	Total
2. Water																										
Installed capacity (MW)						63,640	63,640	63,640	63,640	63,640	63,640	63,640	63,640	63,640	63,640	63,640	63,640	63,640	63,640	63,640	63,640	63,640	63,640	63,640	63,640	1,272,800
Capacity requirement for average demand						50,912	50,912	50,912	50,912	50,912	50,912	50,912	50,912	50,912	50,912	50,912	50,912	50,912	50,912	50,912	50,912	50,912	50,912	50,912	50,912	1,018,240
(less 20% for peak demand)																										
Available capacity (95%)						48,366	48,366	48,366	48,366	48,366	48,366	48,366	48,366	48,366	48,366	48,366	48,366	48,366	48,366	48,366	48,366	48,366	48,366	48,366	48,366	967,328
A. Operating income																										
(a) Capacity																										
1. Capacity requirement (m3/d)						48,366	48,366	48,366	48,366	48,366	48,366	48,366	48,366	48,366	48,366	48,366	48,366	48,366	48,366	48,366	48,366	48,366	48,366	48,366	48,366	967,328
2. Capacity requirement at sending-end (2% loss)						47,399	47,399	47,399	47,399	47,399	47,399	47,399	47,399	47,399	47,399	47,399	47,399	47,399	47,399	47,399	47,399	47,399	47,399	47,399	47,399	947,981
3. Capacity requirement at transmission-end (0% loss)						47,399	47,399	47,399	47,399	47,399	47,399	47,399	47,399	47,399	47,399	47,399	47,399	47,399	47,399	47,399	47,399	47,399	47,399	47,399	47,399	947,981
4. Unit charge ($/m3/d)	570.46	587.57	605.20	623.36	642.06	661.32	681.16	701.59	722.64	744.32	766.65	789.65	813.34	837.74	862.87	888.76	915.42	942.88	971.17	1,000.31	1,030.31	1,061.22	1,093.06	1,125.85	1,159.63	
570.46 in 1994																										
5. Total charge at transmission-end						31,346	32,286	33,255	34,253	35,280	36,339	37,429	38,552	39,708	40,899	42,126	43,390	44,692	46,033	47,414	48,836	50,301	51,810	53,364	54,965	842,277
(b) Production																										
1. Production requirement (m3)						17,653,736	17,653,736	17,653,736	17,653,736	17,653,736	17,653,736	17,653,736	17,653,736	17,653,736	17,653,736	17,653,736	17,653,736	17,653,736	17,653,736	17,653,736	17,653,736	17,653,736	17,653,736	17,653,736	17,653,736	353,074,720
2. Production requirement at sending-end (2% loss)						17,300,661	17,300,661	17,300,661	17,300,661	17,300,661	17,300,661	17,300,661	17,300,661	17,300,661	17,300,661	17,300,661	17,300,661	17,300,661	17,300,661	17,300,661	17,300,661	17,300,661	17,300,661	17,300,661	17,300,661	346,013,226
3. Production requirement at transmission-end (0% loss)						17,300,661	17,300,661	17,300,661	17,300,661	17,300,661	17,300,661	17,300,661	17,300,661	17,300,661	17,300,661	17,300,661	17,300,661	17,300,661	17,300,661	17,300,661	17,300,661	17,300,661	17,300,661	17,300,661	17,300,661	346,013,226
4. Unit charge ($/m3)	1.15	1.18	1.22	1.26	1.29	1.33	1.37	1.41	1.46	1.50	1.55	1.59	1.64	1.69	1.74	1.79	1.85	1.90	1.96	2.02	2.08	2.14	2.20	2.27	2.34	
1.15 in 1994																										
5. Total charge at transmission-end						23,065	23,757	24,469	25,203	25,959	26,738	27,540	28,367	29,218	30,094	30,997	31,927	32,885	33,871	34,887	35,934	37,012	38,122	39,266	40,444	619,755
Total income						54,411	56,043	57,724	59,456	61,240	63,077	64,969	66,918	68,926	70,993	73,123	75,317	77,576	79,904	82,301	84,770	87,313	89,932	92,630	95,409	1,462,032
B. Operating expenditure																										
Foreign						6,078	6,260	6,448	6,641	6,841	7,046	7,257	7,475	7,699	7,930	8,168	8,413	8,666	8,926	9,193	9,469	9,753	10,046	10,347	10,658	163,316
Local						5,354	5,514	5,680	5,850	6,025	6,206	6,392	6,584	6,782	6,985	7,195	7,410	7,633	7,862	8,098	8,341	8,591	8,849	9,114	9,387	143,851
Total expenditure						11,431	11,774	12,128	12,491	12,866	13,252	13,650	14,059	14,481	14,915	15,363	15,824	16,298	16,787	17,291	17,810	18,344	18,894	19,461	20,045	307,166
C. Net operating income (A - B)						42,979	44,269	45,597	46,964	48,373	49,825	51,319	52,859	54,445	56,078	57,760	59,493	61,278	63,116	65,010	66,960	68,969	71,038	73,169	75,364	1,154,866
	1994	1995	1996	1997	1998	1999	2000	2001	2002	2003	2004	2005	2006	2007	2008	2009	2010	2011	2012	2013	2014	2015	2016	2017	2018	Total
3. Total (Electricity and Water)																										
A. Operating income					51,531	135,132	139,186	143,362	147,663	152,093	156,656	161,355	166,196	171,182	176,317	181,607	187,055	192,667	198,447	204,400	210,532	216,848	223,353	230,054	143,884	3,589,519
B. Operating expenditure																										
Foreign					1,807	8,909	9,176	9,451	9,735	10,027	10,328	10,638	10,957	11,286	11,624	11,973	12,332	12,702	13,083	13,476	13,880	14,296	14,725	15,167	12,358	237,929
Local					24,255	43,348	44,649	45,988	47,368	48,789	50,253	51,760	53,313	54,912	56,560	58,256	60,004	61,804	63,658	65,568	67,535	69,561	71,648	73,798	32,204	1,145,232
Total					26,062	52,257	53,825	55,440	57,103	58,816	60,580	62,398	64,270	66,198	68,184	70,229	72,336	74,506	76,741	79,044	81,415	83,857	86,373	88,964	44,562	1,383,161
C. Net operating income (A - B)					25,469	82,875	85,361	87,922	90,560	93,277	96,075	98,957	101,926	104,984	108,133	111,377	114,719	118,160	121,705	125,356	129,117	132,990	136,980	141,090	99,322	2,206,358

Note: Annual price increase (in charges and expenditures)
3%

Appendix 8.9 Cash flow table for financial planning (operation period)--stage 1

Thousand US$

Project year	2	3	4	5	6	7	8	9	10	11	12	13	14	15	16	17	18	19	20	21	22	
Year	1998	1999	2000	2001	2002	2003	2004	2005	2006	2007	2008	2009	2010	2011	2012	2013	2014	2015	2016	2017	2018	Total
1. Net cash flow from operatio	25,469	82,875	85,361	87,922	90,560	93,277	96,075	98,957	101,926	104,984	108,133	111,377	114,719	118,160	121,705	125,356	129,117	132,990	136,980	141,090	99,322	2,206,358
2. Interest earned	382	1,243	1,280	1,319	1,358	1,399	1,441	1,484	1,529	1,575	1,622	1,671	1,721	1,772	1,826	1,880	1,937	1,995	2,055	2,116	1,490	33,095
3%																						
3. Working capital (net increas	4,344	4,366	261	269	277	286	294	303	312	321	331	341	351	362	373	384	395	407	419	432	-14,827	0
4. Interest paid on debt	347	20,197	18,803	17,297	15,671	13,915	12,018	9,970	7,757	5,368	2,787	0	0	0	0	0	0	0	0	0	0	124,130
8%																						
5. Net income before tax	21,160	59,555	67,578	71,675	75,970	80,476	85,204	90,169	95,386	100,870	106,637	112,707	116,088	119,571	123,158	126,853	130,658	134,578	138,616	142,774	115,640	2,115,322
6. Income tax paid	0	0	0	0	0	0	0	0	0	0	0	0	0	0	0	0	0	0	0	0	0	0
0%																						
7. After-tax cash flow	21,160	59,555	67,578	71,675	75,970	80,476	85,204	90,169	95,386	100,870	106,637	112,707	116,088	119,571	123,158	126,853	130,658	134,578	138,616	142,774	115,640	2,115,322
8. Loan repayments		17,427	18,822	20,327	21,954	23,710	25,607	27,655	29,868	32,257	34,839											252,465
Outstanding principal	252,465	235,038	216,216	195,889	173,935	150,225	124,619	96,964	67,096	34,839	0											
9. After-debt service cash flow	21,160	42,128	48,756	51,347	54,017	56,766	59,598	62,514	65,518	68,613	71,798	112,707	116,088	119,571	123,158	126,853	130,658	134,578	138,616	142,774	115,640	1,862,857
Cummulative	21,160	63,288	112,044	163,391	217,408	274,173	333,771	396,285	461,803	530,416	602,214	714,921	831,009	950,580	1,073,739	1,200,591	1,331,250	1,465,828	1,604,444	1,747,218	1,862,857	
10. Debt service coverage		1.12	1.30	1.36	1.44	1.51	1.58	1.66	1.74	1.82	1.91											
Item 9 / (items 4 & 8)																						

Note: 1. Assumptions on loan

1 Principal	252.47 million US dollars
2 Interest	8%
3 Duration	10 years
4 PRF	0.149029
5 Loan ratio	70%

2. Interest earned: Interest on a half of the net operating income of the year
3. Working capital: 2-month operating expenditure
4. Beginning of year (BOY) basis
5. Interest paid in 1996 is on the working capital of that year.
   Interest on the loan in1996 is included in the initial investment.

Appendix 8.10 Discounted return on equity invested

Thousand US$

	Project year	0	1	2	3	4	5	6	7	8	9	10	11	12	13	14	15	16	17	18	19	20	21	22	
	Year	1996	1997	1998	1999	2000	2001	2002	2003	2004	2005	2006	2007	2008	2009	2010	2011	2012	2013	2014	2015	2016	2017	2018	Total
A. Cash inflow				51,913	136,376	140,467	144,681	149,021	153,492	158,097	162,840	167,725	172,756	177,939	183,277	188,776	194,439	200,272	206,280	212,469	218,843	225,408	232,170	145,374	3,622,614
a. Operation				51,531	135,132	139,186	143,362	147,663	152,093	156,656	161,355	166,196	171,182	176,317	181,607	187,055	192,667	198,447	204,400	210,532	216,848	223,353	230,054	143,884	3,589,519
b. Interest earned				382	1,243	1,280	1,319	1,358	1,399	1,441	1,484	1,529	1,575	1,622	1,671	1,721	1,772	1,826	1,880	1,937	1,995	2,055	2,116	1,490	33,095
B. Cash outflow		16,476	137,883	128,860	94,248	91,711	93,333	95,005	96,726	98,499	100,325	102,206	104,144	106,141	70,570	72,687	74,868	77,114	79,427	81,810	84,265	86,792	89,396	29,734	2,012,222
a. Equity capital paid-in		16,476	137,883	98,106																					252,465
b. Operation				26,062	52,257	53,825	55,440	57,103	58,816	60,580	62,398	64,270	66,198	68,184	70,229	72,336	74,506	76,741	79,044	81,415	83,857	86,373	88,964	44,562	1,383,161
c. Net working capital				4,344	4,366	261	269	277	286	294	303	312	321	331	341	351	362	373	384	395	407	419	432	-14,827	0
d. Interest paid on debt				347	20,197	18,803	17,297	15,671	13,915	12,018	9,970	7,757	5,368	2,787	0	0	0	0	0	0	0	0	0	0	124,130
e. Income (corporate) tax paid				0	0	0	0	0	0	0	0	0	0	0	0	0	0	0	0	0	0	0	0	0	
f. Loan repayments				0	17,427	18,822	20,327	21,954	23,710	25,607	27,655	29,868	32,257	34,839	0	0	0	0	0	0	0	0	0	0	252,465
C. Net cash flow (A - B)		-16,476	-137,883	-76,947	42,128	48,756	51,347	54,017	56,766	59,598	62,514	65,518	68,613	71,798	112,707	116,088	119,571	123,158	126,853	130,658	134,578	138,616	142,774	115,640	1,610,392
D. Cumulative net CF		-16,476	-154,359	-231,305	-189,178	-140,422	-89,074	-35,058	21,708	81,306	143,820	209,338	277,951	349,749	462,456	578,544	698,115	821,273	948,126	1,078,785	1,213,363	1,351,978	1,494,752	1,610,392	
E. Net present value		-16,476	-142,925	-198,307	-150,175	-103,214	-60,622	-22,092	12,667	43,927	71,946	96,964	119,208	138,890	170,044	196,972	220,075	239,722	256,249	269,965	281,151	290,065	296,941	296,216	2,307,189
8% discount rate		1.00	0.93	0.86	0.79	0.74	0.68	0.63	0.58	0.54	0.50	0.46	0.43	0.40	0.37	0.34	0.32	0.29	0.27	0.25	0.23	0.21	0.20	0.18	
F. Cumulative NPV		-16,476	-159,401	-357,708	-507,884	-611,098	-671,720	-693,812	-681,146	-637,219	-565,273	-468,309	-349,101	-210,210	-40,166	156,805	376,880	616,602	872,851	1,142,816	1,423,967	1,714,032	2,010,973	2,307,189	

G. Internal rate of return on equity (IRR) 22%

Appendix 8.11 Economic rate of return analysis--revenue-based approach

Thousand R.O.

	Project year	0	1	2	3	4	5	6	7	8	9	10	11	12	13	14	15	16	17
	Year	1996	1997	1998	1999	2000	2001	2002	2003	2004	2005	2006	2007	2008	2009	2010	2011	2012	2013
1. Electricity																			
A. Benefit																			
(a) Capacity																			
1 Power requirement at generation (MW)				106	202	304	413	529	652	783	921	1,050	1,185	1,329	1,480	1,640	1,698	1,698	1,698
2 Power requirement at sending-end (2% loss)				103	198	298	405	518	639	767	903	1,029	1,162	1,302	1,451	1,607	1,664	1,664	1,664
3 Power requirement at transmission-end (3% loss)				100	192	289	392	503	620	744	876	998	1,127	1,263	1,407	1,559	1,614	1,614	1,614
4 Total benefit at transmission-end @34.48 R.O./KW				3,459	6,614	9,956	13,530	17,328	21,365	25,656	30,194	34,404	38,850	43,549	48,513	53,760	55,655	55,655	55,655
(b) Energy																			
1 Energy requirement at generation (MWH)				475,898	913,345	1,376,776	1,872,470	2,399,234	2,959,055	3,554,049	4,183,412	4,767,198	5,383,898	6,035,450	6,723,916	7,451,482	7,744,569	7,744,569	7,744,569
2 Energy requirement at sending-end (2% loss)				466,380	895,078	1,349,240	1,835,021	2,351,249	2,899,873	3,482,968	4,099,744	4,671,854	5,276,220	5,914,741	6,589,438	7,302,452	7,589,677	7,589,677	7,589,677
3 Energy requirement at transmission-end (3% loss)				452,388	868,226	1,308,763	1,779,970	2,280,712	2,812,877	3,378,479	3,976,752	4,531,699	5,117,933	5,737,299	6,391,755	7,083,379	7,361,987	7,361,987	7,361,987
4 Total benefit at transmission-end @0.01036 R.O./KWH				4,687	8,995	13,559	18,440	23,628	29,141	35,001	41,199	46,948	53,022	59,438	66,219	73,384	76,270	76,270	76,270
Sub-total				8,146	15,609	23,514	31,970	40,957	50,507	60,657	71,393	81,352	91,872	102,987	114,732	127,143	131,925	131,925	131,925
B. Cost																			
(a) Capital cost																			
Foreign		15,160	114,110	19,540	23,650	42,350	12,570	44,460	27,190	23,230	44,870	30,310	48,570	51,950	24,660	0	0	0	0
Local		2,655	11,601	12,420	1,485	270	324	423	1,701	306	1,602	576	1,800	1,872	369	0	0	0	0
Total		17,815	125,711	31,960	25,135	42,620	12,894	44,883	28,891	23,536	46,472	30,886	50,370	53,822	25,029	0	0	0	0
(b) Operating cost																			
Foreign				136	260	392	534	684	843	1,013	1,192	1,359	1,534	1,720	1,916	2,124	2,207	2,207	2,207
Local				3,144	6,034	9,095	12,370	15,849	19,548	23,478	27,636	31,492	35,566	39,870	44,418	49,224	51,161	51,161	51,161
Total				3,279	6,294	9,487	12,903	16,533	20,391	24,491	28,828	32,851	37,100	41,590	46,335	51,348	53,368	53,368	53,368
Sub-total		17,815	125,711	35,239	31,429	52,107	25,797	61,416	49,282	48,027	75,300	63,737	87,470	95,412	71,364	51,248	53,368	53,368	53,368
C. Net benefit (A - B)		-17,815	-125,711	-27,093	-15,820	-28,593	6,173	-20,460	1,225	12,630	-3,907	17,615	4,402	7,575	43,368	75,795	78,557	78,557	78,557
D. Net present value		-17,815	-116,399	-23,228	-12,559	-21,017	4,201	-12,893	715	6,823	-1,954	8,159	1,888	3,008	15,946	25,805	24,764	22,930	21,232
8% discount rate		1.00	0.93	0.86	0.79	0.74	0.68	0.63	0.58	0.54	0.50	0.46	0.43	0.40	0.37	0.34	0.32	0.29	0.27
E. Cumulative NPV		-17,815	-134,214	-157,442	-170,001	-191,017	-186,816	-199,709	-198,994	-192,171	-194,125	-185,966	-184,078	-181,070	-165,124	-139,318	-114,554	-91,624	-70,392

F. FRR 10%

	Project year	18	19	20	21	22	23	24	25	26	27	28	29	30	31	32	33	
	Year	2014	2015	2016	2017	2018	2019	2020	2021	2022	2023	2024	2025	2026	2027	2028	2029	Total
1. Electricity																		
A. Benefit																		
(a) Capacity																		
1 Power requirement at generation (MW)		1,698	1,698	1,698	1,698	1,522	1,430	1,341	1,161	1,073	985	897	717	628	537	360	268	33,398
2 Power requirement at sending-end (2% loss)		1,664	1,664	1,664	1,664	1,491	1,401	1,315	1,138	1,052	965	879	702	616	526	353	263	32,730
3 Power requirement at transmission-end (3% loss)		1,614	1,614	1,614	1,614	1,446	1,359	1,275	1,104	1,020	936	852	681	597	510	342	255	31,748
4 Total benefit at transmission-end @34.48 R.O./KW		55,655	55,655	55,655	55,655	49,872	46,861	43,970	38,067	35,176	32,285	29,393	23,491	20,600	17,588	11,806	8,794	1,094,663
(b) Energy																		
1 Energy requirement at generation (MWH)		7,744,569	7,744,569	7,744,569	7,744,569	6,939,938	6,118,545	5,716,229	5,313,914	4,894,836	4,492,520	3,671,127	3,268,812	2,866,496	2,045,103	1,642,787	821,394	150,099,866
2 Energy requirement at sending-end (2% loss)		7,589,677	7,589,677	7,589,677	7,589,677	6,801,140	5,996,174	5,601,905	5,207,636	4,796,939	4,402,670	3,597,704	3,203,435	2,809,166	2,004,201	1,609,932	804,966	147,097,869
3 Energy requirement at transmission-end (3% loss)		7,361,987	7,361,987	7,361,987	7,361,987	6,597,105	5,816,289	5,433,848	5,051,407	4,653,031	4,270,590	3,489,773	3,107,332	2,724,891	1,944,075	1,561,634	780,817	142,684,933
4 Total benefit at transmission-end @0.01036 R.O./KWH		76,270	76,270	76,270	76,270	68,346	60,257	56,295	52,333	48,205	44,243	36,154	32,192	28,230	20,141	16,179	8,089	1,478,216
Sub-total		131,925	131,925	131,925	131,925	118,219	107,118	100,264	90,400	83,381	76,528	65,548	55,683	48,829	37,728	27,984	16,883	2,572,879
B. Cost																		
(a) Capital cost																		
Foreign		0	0	0	0	0	0	0	0	0	0	0	0	0	0	0	0	522,620
Local		0	0	0	0	0	0	0	0	0	0	0	0	0	0	0	0	37,404
Total		0	0	0	0	0	0	0	0	0	0	0	0	0	0	0	0	560,024
(b) Operating cost																		
Foreign		2,207	2,207	2,207	2,207	1,978	1,744	1,629	1,514	1,395	1,280	1,046	932	817	583	468	234	42,778
Local		51,161	51,161	51,161	51,161	45,845	40,419	37,761	35,104	32,335	29,678	24,251	21,594	18,936	13,510	10,852	5,426	991,560
Total		53,368	53,368	53,368	53,368	47,823	42,163	39,391	36,618	33,730	30,958	25,298	22,525	19,753	14,093	11,320	5,660	1,034,338
Sub-total		53,368	53,368	53,368	53,368	47,823	42,163	39,391	36,618	33,730	30,958	25,298	22,525	19,753	14,093	11,320	5,660	1,594,362
C. Net benefit (A - B)		78,557	78,557	78,557	78,557	70,395	64,955	60,874	53,781	49,651	45,570	40,250	33,157	29,076	23,636	16,664	11,223	978,516
D. Net present value		19,659	18,203	16,854	15,606	12,949	11,063	9,600	7,853	6,713	5,705	4,666	3,559	2,890	2,175	1,420	885	69,405
8% discount rate		0.25	0.23	0.21	0.20	0.18	0.17	0.16	0.15	0.14	0.13	0.12	0.11	0.10	0.09	0.09	0.08	
E. Cumulative NPV		-50,733	-32,531	-15,676	-70	12,878	23,941	33,541	41,394	48,107	53,811	58,477	62,035	64,925	67,100	68,520	69,405	

Project year	0	1	2	3	4	5	6	7	8	9	10	11	12	13	14	15	16	17
Year	1996	1997	1998	1999	2000	2001	2002	2003	2004	2005	2006	2007	2008	2009	2010	2011	2012	2013
2. Water																		
A. Benefit																		
(a) Capacity																		
1. Production requirement (m3/d)				10,131	20,224	34,999	50,500	66,764	83,829	100,525	115,089	130,298	146,183	162,779	180,122	180,122	180,122	180,122
2. Capacity requirement (20% for peak demand)				12,157	24,269	41,999	60,600	80,117	100,595	120,630	138,107	156,357	175,420	195,335	216,147	216,147	216,147	216,147
3. Capacity requirement at sending-end (2% loss)				11,914	23,784	41,159	59,388	78,515	98,583	118,217	135,345	153,230	171,912	191,429	211,824	211,824	211,824	211,824
4. Capacity requirement at transmission-end (0% loss)				11,914	23,784	41,159	59,388	78,515	98,583	118,217	135,345	153,230	171,912	191,429	211,824	211,824	211,824	211,824
5. Total benefit at transmission-end @214.33 R.O./m3/d				2,553	5,098	8,822	12,729	16,828	21,129	25,338	29,008	32,842	36,846	41,029	45,400	45,400	45,400	45,400
(b) Production																		
1. Production requirement (m3)				3,697,646	7,381,897	12,774,673	18,432,633	24,368,973	30,597,635	36,691,625	42,007,505	47,558,693	53,356,893	59,414,511	65,744,704	74,948,972	74,948,972	74,948,972
2. Production requirement at sending-end (-2%)				3,623,693	7,234,259	12,519,179	18,063,981	23,881,593	29,985,682	35,957,793	41,167,355	46,607,519	52,289,755	58,226,221	64,429,809	73,449,993	73,449,993	73,449,993
3. Production requirement at transmission-end (-0%)				3,623,693	7,234,259	12,519,179	18,063,981	23,881,593	29,985,682	35,957,793	41,167,355	46,607,519	52,289,755	58,226,221	64,429,809	73,449,993	73,449,993	73,449,993
4. Total benefit at transmission-end @0.401 R.O./m3				1,453	2,901	5,020	7,244	9,577	12,024	14,419	16,508	18,690	20,968	23,349	25,836	29,453	29,453	29,453
Sub-total				4,007	7,999	13,842	19,972	26,405	33,154	39,757	45,517	51,531	57,814	64,378	71,237	74,854	74,854	74,854
B. Cost																		
(a) Capital cost																		
Foreign	930	12,750	65,980	0	5,560	33,030	0	0	5,560	33,030	0	5,560	33,030	0	0	0	0	0
Local	1,026	7,767	21,375	0	999	8,928	0	0	999	8,928	0	999	8,928	0	0	0	0	0
Total	2,070	21,380	89,730	0	6,670	42,950	0	0	6,670	42,950	0	6,670	42,950	0	0	0	0	0
(b) Operating cost																		
Foreign				422	843	1,459	2,105	2,783	3,494	4,190	4,797	5,431	6,093	6,785	7,507	8,558	8,558	8,558
Local				335	668	1,156	1,669	2,206	2,770	3,321	3,803	4,305	4,830	5,378	5,951	6,785	6,785	6,785
Total				757	1,511	2,615	3,773	4,989	6,264	7,511	8,599	9,736	10,923	12,163	13,459	15,343	15,343	15,343
Sub-total	2,070	21,380	89,730	757	8,181	45,565	3,773	4,989	12,934	50,461	8,599	16,406	53,873	12,163	13,459	15,343	15,343	15,343
C. Net benefit (A - B)	-2,070	-21,380	-89,730	3,250	-183	-31,723	16,199	21,416	20,220	-10,705	36,917	35,126	3,941	52,215	57,778	59,511	59,511	59,511
D. Net present value	-2,070	-19,796	-76,929	2,580	-134	-21,590	10,208	12,496	10,924	-5,355	17,100	15,065	1,565	19,199	19,671	18,760	17,371	16,084
8% discount rate	1.00	0.93	0.86	0.79	0.74	0.68	0.63	0.58	0.54	0.50	0.46	0.43	0.40	0.37	0.34	0.32	0.29	0.27
E. Cumulative NPV	-2,070	-21,866	-98,795	-96,216	-96,350	-117,940	-107,732	-95,236	-84,312	-89,667	-72,567	-57,502	-55,937	-36,738	-17,067	1,693	19,064	35,148
F. FRR 16%																		

Project year	18	19	20	21	22	23	24	25	26	27	28	29	30	31	32	
Year	2014	2015	2016	2017	2018	2019	2020	2021	2022	2023	2024	2025	2026	2027	2028	Total
2. Water																
A. Benefit																
(a) Capacity																
1. Production requirement (m3/d)	180,122	180,122	180,122	180,122	180,122	183,283	183,283	183,283	1,221,892	1,221,892	1,221,892	61,094	61,094	61,094	61,094	7,002,327
2. Capacity requirement (20% for peak demand)	216,147	216,147	216,147	216,147	216,147	152,736	152,736	152,736	1,018,243	1,018,243	1,018,243	50,912	50,912	50,912	50,912	6,767,495
3. Capacity requirement at sending-end (2% loss)	211,824	211,824	211,824	211,824	211,824	149,681	149,681	149,681	997,878	997,878	997,878	49,894	49,894	49,894	49,894	6,632,145
4. Capacity requirement at transmission-end (0% loss)	211,824	211,824	211,824	211,824	211,824	149,681	149,681	149,681	997,878	997,878	997,878	49,894	49,894	49,894	49,894	6,632,145
5. Total benefit at transmission-end @214.33 R.O./m3/d	45,400	45,400	45,400	45,400	45,400	32,081	32,081	32,081	213,875	213,875	213,875	10,694	10,694	10,694	10,694	1,421,468
(b) Production																
1. Production requirement (m3)	74,948,972	74,948,972	74,948,972	74,948,972	74,948,972	63,553,450	63,553,450	63,553,450	423,690,912	423,690,912	423,690,912	21,184,483	21,184,483	21,184,483	21,184,483	2,548,090,183
2. Production requirement at sending-end (-2%)	73,449,993	73,449,993	73,449,993	73,449,993	73,449,993	62,282,381	62,282,381	62,282,381	415,217,094	415,217,094	415,217,094	20,760,794	20,760,794	20,760,794	20,760,794	2,497,128,379
3. Production requirement at transmission-end (-0%)	73,449,993	73,449,993	73,449,993	73,449,993	73,449,993	62,282,381	62,282,381	62,282,381	415,217,094	415,217,094	415,217,094	20,760,794	20,760,794	20,760,794	20,760,794	2,497,128,379
4. Total benefit at transmission-end @0.401 R.O./m3	29,453	29,453	29,453	29,453	29,453	24,975	24,975	24,975	166,502	166,502	166,502	8,325	8,325	8,325	8,325	1,001,348
Sub-total	74,854	74,854	74,854	74,854	74,854	57,056	57,056	57,056	380,377	380,377	380,377	19,019	19,019	19,019	19,019	2,422,816
B. Cost																
(a) Capital cost																
Foreign	0	0	0	0	0	0	0	0	0	0	0	0	0	0	0	195,430
Local	0	0	0	0	0	0	0	0	0	0	0	0	0	0	0	59,949
Total	0	0	0	0	0	0	0	0	0	0	0	0	0	0	0	262,040
(b) Operating cost																
Foreign	8,558	8,558	8,558	8,558	8,558	7,257	7,257	7,257	48,381	48,381	48,381	2,419	2,419	2,419	2,419	290,966
Local	6,785	6,785	6,785	6,785	6,785	5,753	5,753	5,753	38,353	38,353	38,353	1,918	1,918	1,918	1,918	230,658
Total	15,343	15,343	15,343	15,343	15,343	13,010	13,010	13,010	86,735	86,735	86,735	4,337	4,337	4,337	4,337	521,625
Sub-total	15,343	15,343	15,343	15,343	15,343	13,010	13,010	13,010	86,735	86,735	86,735	4,337	4,337	4,337	4,337	783,665
C. Net benefit (A - B)	59,511	59,511	59,511	59,511	59,511	44,046	44,046	44,046	293,643	293,643	293,643	14,682	14,682	14,682	14,682	1,639,151
D. Net present value	14,893	13,789	12,768	11,822	10,946	7,502	6,946	6,432	39,701	36,760	34,037	1,576	1,459	1,351	1,251	236,381
8% discount rate	0.25	0.23	0.21	0.20	0.18	0.17	0.16	0.15	0.14	0.13	0.12	0.11	0.10	0.09	0.09	
E. Cumulative NPV	50,040	63,830	76,598	88,420	99,366	106,868	113,814	120,246	159,947	196,707	230,744	232,320	233,779	235,130	236,381	

	Project year	0	1	2	3	4	5	6	7	8	9	10	11	12	13	14	15	16	17
	Year	1996	1997	1998	1999	2000	2001	2002	2003	2004	2005	2006	2007	2008	2009	2010	2011	2012	2013
3. Total (Electricity and Water)																			
A. Total benefit		0	0	8,146	19,615	31,513	45,812	60,929	76,911	93,810	111,150	126,868	143,404	160,801	179,109	198,380	206,779	206,779	206,779
B. Total cost																			
(a) Capital cost																			
Foreign		16,090	126,860	85,520	23,650	47,910	45,600	44,460	27,190	28,790	77,900	30,310	54,130	84,980	24,660	0	0	0	0
Local		3,681	19,368	33,795	1,485	1,269	9,252	423	1,701	1,305	10,530	576	2,799	10,800	369	0	0	0	0
Total		19,771	146,228	119,315	25,135	49,179	54,852	44,883	28,891	30,095	88,430	30,886	56,929	95,780	25,029	0	0	0	0
(b) Operating cost																			
Foreign		0	0	136	683	1,235	1,992	2,789	3,626	4,507	5,382	6,155	6,965	7,813	8,701	9,631	10,766	10,766	10,766
Local		0	0	3,144	6,368	9,763	13,526	17,518	21,753	26,248	30,957	35,295	39,871	44,700	49,797	55,176	57,945	57,945	57,945
Total		0	0	3,279	7,051	10,999	15,518	20,307	25,379	30,755	36,339	41,450	46,836	52,513	58,497	64,807	68,711	68,711	68,711
Sub-total		19,771	146,228	122,594	32,186	60,178	70,370	65,190	54,270	60,850	124,769	72,336	103,765	148,293	83,526	64,807	68,711	68,711	68,711
C. Net benefit (A - B)		-19,771	-146,228	-114,448	-12,571	-28,665	-24,558	-4,261	22,641	32,961	-13,619	54,532	39,638	12,508	95,583	133,573	138,068	138,068	138,068
D. Net present value		-19,771	-135,396	-98,121	-9,979	-21,069	-16,714	-2,685	13,211	17,808	-6,813	25,259	17,000	4,967	35,146	45,476	43,525	40,301	37,315
8% discount rate		1.00	0.93	0.86	0.79	0.74	0.68	0.63	0.58	0.54	0.50	0.46	0.43	0.40	0.37	0.34	0.32	0.29	0.27
E. Cumulative NPV		-19,771	-155,167	-253,288	-263,267	-284,336	-301,050	-303,735	-290,524	-272,717	-279,530	-254,271	-237,271	-232,304	-197,158	-151,682	-108,157	-67,856	-30,541

F. FRR 13%

	Project year	18	19	20	21	22	23	24	25	26	27	28	29	30	31	32	33	
	Year	2014	2015	2016	2017	2018	2019	2020	2021	2022	2023	2024	2025	2026	2027	2028	2029	Total
3. Total (Electricity and Water)																		
A. Total benefit		206,779	206,779	206,779	206,779	193,072	164,174	157,321	147,456	463,758	456,905	445,925	74,701	67,848	56,747	47,003	16,883	4,995,695
B. Total cost																		
(a) Capital cost																		
Foreign		0	0	0	0	0	0	0	0	0	0	0	0	0	0	0	0	718,050
Local		0	0	0	0	0	0	0	0	0	0	0	0	0	0	0	0	97,353
Total		0	0	0	0	0	0	0	0	0	0	0	0	0	0	0	0	815,403
(b) Operating cost																		
Foreign		10,766	10,766	10,766	10,766	10,536	9,001	8,886	8,772	49,776	49,662	49,428	3,351	3,236	3,002	2,887	234	333,745
Local		57,945	57,945	57,945	57,945	52,630	46,172	43,514	40,857	70,689	68,031	62,605	23,511	20,854	15,428	12,770	5,426	1,222,218
Total		68,711	68,711	68,711	68,711	63,166	55,173	52,401	49,628	120,465	117,693	112,032	26,862	24,090	18,430	15,657	5,660	1,555,963
Sub-total		68,711	68,711	68,711	68,711	63,166	55,173	52,401	49,628	120,465	117,693	112,032	26,862	24,090	18,430	15,657	5,660	2,371,366
C. Net benefit (A - B)		138,068	138,068	138,068	138,068	129,906	109,001	104,920	97,828	343,294	339,213	333,892	47,839	43,758	38,318	31,346	11,223	2,624,329
D. Net present value		34,551	31,992	29,622	27,428	25,895	18,565	16,546	14,285	46,414	42,465	38,703	5,134	4,349	3,526	2,671	885	310,489
8% discount rate		0.25	0.23	0.21	0.20	0.18	0.17	0.16	0.15	0.14	0.13	0.12	0.11	0.10	0.09	0.09	0.08	
E. Cumulative NPV		4,011	36,003	65,625	93,053	116,948	135,513	152,058	166,343	212,757	255,222	293,925	299,059	303,408	306,933	309,604	310,489	

Appendix 8.12 Sensitivity analysis for ERR

	Discount rate		
	7%	9%	10%
Power (R.O.)			
LRMC at generation	28.21	32.74	35.13
LRMC at transmission-end	31.84	37.18	39.99
Water (R.O.)			
LRMC at generation	176.88	205.98	220.96
LRMC at transmission-end	197.40	231.79	249.51
Net benefit (Thousand R.O.)			
Electricity	988,874	1,158,407	1,247,619
Water	1,526,869	1,754,949	1,872,470
Total	2,515,744	2,913,356	3,120,089
ERR			
Electricity	**10%**	**11%**	**12%**
Water	**15%**	**17%**	**17%**
Total	**13%**	**13%**	**14%**

Appendix 8.13 Key assumptions for the Alternative

(1)	Alternative scheme:		
	Plant type	:	oil-fired thermal plant
	Capital cost (shadow-priced)	:	346.05 R.O./KW (900 US$/KW)
	Life expectancy	:	20 years
	Discount factor	:	8%
	(opportunity cost of capital)		
(2)	KW capacity cost (benefit):*		
	Annuitized value	:	346.05 R.O./KW x 0.101852
			= 35.246 R.O./KW (annually)
(3)	KWH energy cost (benefit):		
	Price of fuel (oil)	:	0.2 $/ℓ
	Heat value	:	10,000 kcal/ℓ
	Thermal efficiency	:	31%
	Heat rate**	:	2,774 kcal/KWH
	Fuel cost***	:	5.55×10^{-2} $/KWH
	Operating costs excluding fuel		(2.13×10^{-2} R.O./KWH)
	Total operating costs	:	8.77×10^{-3} R.O./KWH
		:	3.01×10^{-2} R.O./KWH
(4)	Loss:		
	Station use	:	6%
	Transmission loss	:	3%

* In this report, operation and maintenance costs are not included in the capacity cost, but in the energy (or operating) cost.

** 1 KW = 1,000 joul/sec.
1 kcal = 4,185.5 joul
1 KWH = 1,000 x 3,600 ÷ 4,185.5 = 860 (kcal/hr)
Heat rate = 860 ÷ 31% = 2,774 (kcal/KWH)

*** 5.55×10^{-2} $/KWH = 0.2 $/ℓ x 2,774 kcal/KWH ÷ 10,000 kcal/ℓ

Appendix 8.14 Economic cost of alternative scheme--electricity

Thousand R.O.

	1996	1997	1998	1999	2000	2001	2002	2003	2004	2005	2006	2007	2008	2009	2010	2011	2012	2013
(a) Capacity																		
1 Power requirement at generation (MW)			106	202	304	413	529	652	783	921	1,050	1,185	1,329	1,480	1,640	1,698	1,698	1,698
2 Power requirement at sending-end (2% loss)			103	198	298	405	518	639	767	903	1,029	1,162	1,302	1,451	1,607	1,664	1,664	1,664
3 Power requirement at transmission-end (3% loss)			100	192	289	392	503	620	744	876	998	1,127	1,263	1,407	1,559	1,614	1,614	1,614
4 Cost at transmission-end @41.75 R.O./KW			4,189	8,008	12,055	16,383	20,982	25,870	31,065	36,560	41,657	47,042	52,731	58,742	65,095	67,389	67,389	67,389
(b) Energy																		
1 Energy requirement at generation (MWH)			475,898	913,345	1,376,776	1,872,470	2,399,234	2,959,055	3,554,049	4,183,412	4,767,198	5,383,898	6,035,450	6,723,916	7,451,482	7,753,591	8,353,461	8,953,331
2 Energy requirement at sending-end (2% loss)			466,380	895,078	1,349,240	1,835,021	2,351,249	2,899,873	3,482,968	4,099,744	4,671,854	5,276,220	5,914,741	6,589,438	7,302,452	7,598,519	8,186,392	8,774,264
3 Energy requirement at transmission-end (3% loss)			452,388	868,226	1,308,763	1,779,970	2,280,712	2,812,877	3,378,479	3,976,752	4,531,699	5,117,933	5,737,299	6,391,755	7,083,379	7,370,564	7,940,800	8,511,036
4 Cost at transmission-end @0.0330 R.O./KWH			14,929	28,651	43,189	58,739	75,263	92,825	111,490	131,233	149,546	168,892	189,331	210,928	233,751	243,229	262,046	280,864
Total cost			19,118	36,660	55,244	75,122	96,246	118,695	142,555	167,793	191,203	215,934	242,062	269,670	298,846	310,618	329,436	348,254

	2014	2015	2016	2017	2018	2019	2020	2021	2022	2023	2024	2025	2026	2027	2028	2029	Total
(a) Capacity																	
1 Power requirement at generation (MW)	1,698	1,698	1,698	1,698	1,522	1,430	1,341	1,161	1,073	985	897	717	628	537	360	268	33,398
2 Power requirement at sending-end (2% loss)	1,664	1,664	1,664	1,664	1,491	1,401	1,315	1,138	1,052	965	879	702	616	526	353	263	32,730
3 Power requirement at transmission-end (3% loss)	1,614	1,614	1,614	1,614	1,446	1,359	1,275	1,104	1,020	936	852	681	597	510	342	255	31,748
4 Cost at transmission-end @41.75 R.O./KW	67,389	67,389	67,389	67,389	60,388	56,741	53,241	46,093	42,592	39,092	35,591	28,444	24,943	21,296	14,295	10,648	1,325,469
(b) Energy																	
1 Energy requirement at generation (MWH)	9,553,201	10,412,136	10,412,136	10,412,136	9,330,356	8,766,928	8,226,038	7,121,721	6,580,831	6,039,940	5,499,050	4,394,733	3,853,843	3,290,415	2,208,635	1,645,208	180,903,872
2 Energy requirement at sending-end (2% loss)	9,362,137	10,203,893	10,203,893	10,203,893	9,143,749	8,591,590	8,061,517	6,979,286	6,449,214	5,919,142	5,389,069	4,306,838	3,776,766	3,224,607	2,164,462	1,612,303	177,285,794
3 Energy requirement at transmission-end (3% loss)	9,081,272	9,897,776	9,897,776	9,897,776	8,869,436	8,333,842	7,819,672	6,769,908	6,255,738	5,741,567	5,227,397	4,177,633	3,663,463	3,127,869	2,099,528	1,563,934	171,967,220
4 Cost at transmission-end @0.0330 R.O./KWH	299,682	326,627	326,627	326,627	292,691	275,017	258,049	223,407	206,439	189,472	172,504	137,862	120,894	103,220	69,284	51,610	5,674,918
Total cost	367,071	394,016	394,016	394,016	353,079	331,758	311,290	269,500	249,032	228,563	208,095	166,305	145,837	124,516	83,579	62,258	7,000,387

Appendix 8.15 Economic rate of return analysis (electricity)--comparative method

million R.O.

Year	Project year	Capital cost (1)	Operating cost (2)	Operating benefit (3)	Net benefit (4)=(3)-(1)-(2)	Discount factor 8% (5)	Net present value (6)=(4)x(5)	Cumulative NPV (7)
1996	0	17,815			-17,815	1.00	-17,815	-15,856
1997	1	125,711			-125,711	0.93	-116,399	-132,255
1998	2	31,960	3,279	19,118	-16,122	0.86	-13,822	-146,077
1999	3	25,135	6,294	36,660	5,231	0.79	4,153	-141,924
2000	4	42,620	9,487	55,244	3,137	0.74	2,305	-139,619
2001	5	12,894	12,903	75,122	49,325	0.68	33,569	-106,049
2002	6	44,883	16,533	96,246	34,829	0.63	21,948	-84,101
2003	7	28,891	20,391	118,695	69,413	0.58	40,502	-43,599
2004	8	23,536	24,491	142,555	94,528	0.54	51,070	7,471
2005	9	46,472	28,828	167,793	92,493	0.50	46,270	53,741
2006	10	30,886	32,851	191,203	127,467	0.46	59,042	112,783
2007	11	50,370	37,100	215,934	128,463	0.43	55,096	167,879
2008	12	53,822	41,590	242,062	146,649	0.40	58,236	226,115
2009	13	25,029	46,335	269,670	198,306	0.37	72,917	299,032
2010	14	0	51,348	298,846	247,498	0.34	84,263	383,295
2011	15	0	53,368	310,618	257,250	0.32	81,096	464,391
2012	16	0	53,368	329,436	276,068	0.29	80,582	544,973
2013	17	0	53,368	348,254	294,886	0.27	79,698	624,671
2014	18	0	53,368	367,071	313,704	0.25	78,504	703,175
2015	19	0	53,368	394,016	340,648	0.23	78,932	782,108
2016	20	0	53,368	394,016	340,648	0.21	73,085	855,193
2017	21	0	53,368	394,016	340,648	0.20	67,672	922,865
2018	22	0	47,823	353,079	305,256	0.18	56,149	979,014
2019	23	0	42,163	331,758	289,595	0.17	49,322	1,028,336
2020	24	0	39,391	311,290	271,899	0.16	42,878	1,071,215
2021	25	0	36,618	269,500	232,882	0.15	34,005	1,105,220
2022	26	0	33,730	249,032	215,301	0.14	29,109	1,134,329
2023	27	0	30,958	228,563	197,605	0.13	24,738	1,159,066
2024	28	0	25,298	208,095	182,797	0.12	21,189	1,180,255
2025	29	0	22,525	166,305	143,780	0.11	15,432	1,195,687
2026	30	0	19,753	145,837	126,084	0.10	12,530	1,208,217
2027	31	0	14,093	124,516	110,423	0.09	10,161	1,218,377
2028	32	0	11,320	83,579	72,259	0.09	6,156	1,224,534
2029	33	0	5,660	62,258	56,598	0.08	4,465	1,228,999
Total		560,024	1,034,338	7,000,387	5,406,025		1,22[illegible] [illegible]40	

Economic rate of return (ERR): 29%

Appendix 8.16 Economic rate of return analysis (water)--comparative method

million R.O.

Year	Demand (m3/d)	Capacity requirement (m3/d)	Capacity installed (m3/d)	Number of new plants	Cumulative total installed capacity (m3/d)	Benefit Capital cost	Cost	Net benefit	Discount factor 8%	Net present value	Cumulative NPV
	(1)	(2)=(1)x120% for peak demand	(3)	(4)	(5)	(6)=(3)x@12 million R.O.	(7)	(8)=(6)-(7)	(9)	(10)=(8)x(9)	(11)
1996							1.86	-2	1.00	-2	0
1997							19.24	-19	0.93	-18	-18
1998						36	80.76	-45	0.86	-38	-56
1999	10,131	12,157	13,650	3	13,650	36	0.00	36	0.79	29	-28
2000	20,224	24,269	13,650	3	27,300	48	6.00	42	0.74	31	3
2001	34,999	41,999	18,200	4	45,500	48	38.66	9	0.68	6	10
2002	50,500	60,600	18,200	4	63,700	48	0.00	48	0.63	30	40
2003	66,764	80,117	18,200	4	81,900	60	0.00	60	0.58	35	75
2004	83,829	100,595	22,750	5	104,650	48	6.00	42	0.54	23	98
2005	100,525	120,630	18,200	4	122,850	48	38.66	9	0.50	5	102
2006	115,089	138,107	18,200	4	141,050	48	0.00	48	0.46	22	124
2007	130,298	156,357	18,200	4	159,250	48	6.00	42	0.43	18	142
2008	146,183	175,420	18,200	4	177,450	48	38.66	9	0.40	4	146
2009	162,779	195,335	18,200	4	195,650	60	0.00	60	0.37	22	168
2010	180,122	216,147	22,750	5	218,400	0	0.00	0	0.34	0	168
Total	1,101,445	1,321,734	218,400	48	1,351,350	576	236	340	9	166	975

Economic internal rate of return (EIRR):

46.01%

Note: Assume that the disbursement of the capital cost is made one year earlier, as the construction of plants is completed one year earlier.

JICA