Table XII.5.12 (2/2) ANNUAL DISBURSEMENT SCHEDULE OF FLOOD CONTROL PLAN FOR FEASIBILITY STUDY (ALTERNATIVE 2, ECONOMIC)

Unit: Million Rp.

Description	Amount			1994/1995		1995/1996		1996/1997		1997/1998		1998/1999		1999/2000		2000/2001		2001/2002		2002/2003		2003/2004		2004/2005		2005/2006	
	F.C.	L.C.	Total	F.C.	L.C.	F.C.	L.C.	F.C.	L.C.	F.C.	L.C.	F.C.	L.C.	F.C.	L.C.	F.C.	L.C.	F.C.	L.C.	F.C.	L.C.	F.C.	L.C.	F.C.	L.C.	F.C.	L.C.
I. Construction Base Cost	34,766	21,643	56,409	0	0	0	0	1,398	1,098	2,333	2,129	2,786	2,639	1,666	1,514	0	0	0	0	0	0	10,982	5,824	10,712	6,066	4,889	2,373
1. River Improvement Works	26,583	14,263	40,846	0	0	0	0	0	0	0	0	0	0	0	0	0	0	0	0	0	0	10,982	5,824	10,712	6,066	4,889	2,373
2. Jatibarang Dam	8,183	7,380	15,563	0	0	0	0	1,398	1,098	2,333	2,129	2,786	2,639	1,666	1,514	0	0	0	0	0	0	0	0	0	0	0	0
II. Compensation Cost	0	1,740	1,740	0	0	0	0	0	870	0	870	0	0	0	0	0	0	0	0	0	0	0	0	0	0	0	0
III. Administration Cost	0	4,487	4,487	0	0	0	0	0	259	0	411	0	418	0	245	0	0	0	0	0	0	0	1,297	0	1,296	0	561
IV. Engineering Service	10,044	4,445	14,489	0	0	803	379	1,112	493	667	245	786	289	546	200	1,479	692	1,479	693	0	0	1,304	598	1,304	598	564	258
1. Detailed Design	4,564	2,143	6,707	0	0	803	379	803	379	0	0	0	0	0	0	1,479	692	1,479	693	0	0	0	0	0	0	0	0
2. Construction Supervision	5,480	2,302	7,782	0	0	0	0	309	114	667	245	786	289	546	200	0	0	0	0	0	0	1,304	598	1,304	598	564	258
V. Physical Contingency	4,482	2,783	7,265	0	0	80	38	251	246	300	324	357	293	221	171	148	69	148	69	0	0	1,229	643	1,202	666	546	264
VI. Total (I+II+III+IV+V)	49,292	35,098	84,390	0	0	883	417	2,761	2,966	3,300	3,979	3,929	3,639	2,433	2,130	1,627	761	1,627	762	0	0	13,515	8,362	13,218	8,626	5,999	3,456
VII .Value Added Tax	0	0	0	0	0	0	0	0	0	0	0	0	0	0	0	0	0	0	0	0	0	0	0	0	0	0	0
VIII.Grand Total	49,292	35,098	84,390	0	0	883	417	2,761	2,966	3,300	3,979	3,929	3,639	2,433	2,130	1,627	761	1,627	762	0	0	13,515	8,362	13,218	8,626	5,999	3,456

Notes : *1 Price Level in July,1992
*2 Conversion Rate US$ 1.00 = Rp.2,033, 1 Yen = Rp.16.20

Table XII.5.13 (1/5) SUMMARY OF ANNUAL OMR COST FOR FEASIBILITY STUDY (ECONOMIC)

Item	River Improvement for West Floodway/ Garang River	Jatibarang Dam	Urban Drainage	Hydropower Generation	Total
1. Flood Control	235	51	-	-	286
2. Urban Drainage	-	-	314	-	314
3. Water Resources Development	-	98	-	-	98
4. Hydropower Generation	-	1	-	279	280
Total	235	150	314	279	978

Table XII.5.13 (2/5) ANNUAL OMR COST OF RIVER IMPROVEMENT WORKS FOR FEASIBILITY STUDY (ECONOMIC)

Item		Quantity		Unit Price F.C. (1,000Rp.)	Unit Price L.C. (1,000Rp.)	Amount F.C. (Mill.Rp.)	Amount L.C. (Mill.Rp.)	Amount Total (Mill.Rp.)
I. Maintenance & Replacement						103.1	61.5	164.6
1. West Floodway						18.1	8.5	26.6
(1) Excavation;	Common 1-F	1,700	m3	4.2	1.1	7.1	1.9	9.0
	Common 2-F	1,100	m3	4.8	1.3	5.3	1.4	6.7
	River Mouth	500	m3	5.8	1.7	2.9	0.9	3.8
(2) Retaining Wall;	Type B	20	m	79.0	130.0	1.6	2.6	4.2
(3) Revetment;	Type A	30	m2	23.9	32.2	0.7	1.0	1.7
	Type B	20	m2	25.5	32.5	0.5	0.7	1.2
2. Garang River						19.2	12.3	31.5
(1) Excavation;	Common 1-G	1,400	m3	6.1	1.7	8.5	2.4	10.9
	Common 1-EM	50	m3	3.5	0.9	0.2	0.0	0.2
	Common 2-G	400	m3	6.7	1.8	2.7	0.7	3.4
(2) Embankment		50	m3	1.8	0.5	0.1	0.0	0.1
(3) Revetment;	Type A	10	m2	23.9	32.2	0.2	0.3	0.5
	Type B	200	m2	25.5	32.5	5.1	6.5	11.6
(4) Ground Sill		1	LS	2,390.0	2,400.0	2.4	2.4	4.8
3. Simongan Weir						31.8	22.7	54.5
(1) Excavation;	Common 2-G	30	m3	6.7	1.8	0.2	0.1	0.3
(2) Revetment;	Type C	10	m2	37.5	53.0	0.4	0.5	0.9
(3) Sodding		10	m2	0.1	0.8	0.0	0.0	0.0
(4) Reinforced Concrete		30	m3	230.0	225.0	6.9	6.8	13.7
(5) Main Gate 1 (Painting)		1	LS	13,200.0	6,600.0	13.2	6.6	19.8
(6) Main Gate 2 (Painting)		1	LS	3,020.0	1,510.0	3.0	1.5	4.5
(7) Retaining Wall;	Type C	1	LS	3,430.0	2,660.0	3.4	2.7	6.1
(8) Concrete Block;	t=0.5m	20	m2	22.7	46.7	0.5	0.9	1.4
(9) Gabion Mattress;	t=0.5m	10	m2	11.6	15.2	0.1	0.2	0.3
(10)Bridge		1	LS	990.0	990.0	1.0	1.0	2.0
(11)Control House & Gate House		1	LS	255.0	1,018.0	0.3	1.0	1.3
(12)Steel Stop Log (Painting)		1	LS	2,800.0	1,400.0	2.8	1.4	4.2
4. Intake Structure						8.5	6.3	14.8
(2) Excavation;	Common 2-G	10	m3	6.7	1.8	0.1	0.0	0.1
(3) Reinforced Concrete		5	m3	230.0	225.0	1.2	1.1	2.3
(6) Gate (Painting)		1	LS	1,680.0	840.0	1.7	0.8	2.5
(7) Retaining Wall;	Type C	1	LS	3,430.0	2,660.0	3.4	2.7	6.1
	Type D	1	LS	2,050.0	1,700.0	2.1	1.7	3.8
5. Others						16.1	6.1	22.2
(1) Railroad Bridge		1	LS	5,880.0	2,170.0	5.9	2.2	8.1
(2) Retaining Wall for PDAM; Type E		1	LS	2,920.0	2,740.0	2.9	2.7	5.6
(3) Flap Gate;	1.0m x 1.0m	2	pc	111.0	31.0	0.2	0.1	0.3
	1.5m x 1.5m	0	pc	294.0	40.0	0.0	0.0	0.0
	2.0m x 2.0m	14	pc	506.0	81.0	7.1	1.1	8.2
6. Miscellaneous Works						9.4	5.6	15.0
II. Dredging						8.0	6.0	14.0
1. West Floodway						4.0	3.0	7.0
2. Garang River						4.0	3.0	7.0
III. Operation & Administration						0.0	56.4	56.4
1. Electricity Charge						0.0	24.0	24.0
2. Administration Cost						0.0	32.4	32.4
Total						111.1	123.9	235.0

Table XII.5.13 (3/5) ANNUAL OMR COST OF JATIBARANG DAM CONSTRUCTION WORKS FOR FEASIBILITY STUDY (ECONOMIC)

Item	Quantity	Unit Price (1,000 Rp.) F.C.	Unit Price (1,000 Rp.) L.C.	Amount (Mill.Rp.) F.C.	Amount (Mill.Rp.) L.C.	Total (Mill.Rp.)
I. Maintenance & Replacement				45.0	42.7	87.7
1. Main dam				31.7	30.2	61.9
- Excavation (Ripping & Blasting)	200 m3	6.8	5.0	1.4	1.0	2.4
- Dam Concrete	400 m3	54.5	54.5	21.8	21.8	43.6
- Spillway Concrete (Reinforced)	30 m3	114.0	141.0	3.4	4.2	7.6
- Foundation Treatment (Grouting)	30 m	118.0	73.0	3.5	2.2	5.7
- Intake Facility	1 L.S.			1.4	0.8	2.2
- Maintenance Bridge	350 m2			0.2	0.2	0.4
2. Left Side Ridge Treatment				1.9	1.1	3.0
- Excavation (Ripping)	25 m3	5.1	1.4	0.1	0.0	0.1
- Embankment	0 m3	10.9	7.3	0.0	0.0	0.0
- Water Leakage Treatment (Grouting)	15 m	118.0	73.0	1.8	1.1	2.9
3. Auxiliary Spillway				1.4	1.0	2.4
- Excavation (Ripping)	55 m3	5.1	1.4	0.3	0.1	0.4
- Embankment	2 m3	10.9	7.3	0.0	0.0	0.0
- Invert Concrete	5 m3	90.9	100.0	0.5	0.5	1.0
- Water Leakage Treatment (Grouting)	5 m	118.0	73.0	0.6	0.4	1.0
4. Relocation Road	200 m2	18.2	27.3	3.6	5.5	9.1
5. Relocation of Electrical Tower				2.3	1.0	3.3
6. Miscellaneous Works				4.1	3.9	8.0
II. Reservoir Cleaning				10.0	10.0	20.0
III. Operation & Administration				0.0	42.3	42.3
1. Electricity Charge				0.0	20.0	20.0
2. Administration Cost				0.0	22.3	22.3
Total				55.0	95.0	150.0

Table XII.5.13 (4/5) ANNUAL OMR COST OF URBAN DRAINAGE WORKS FOR FEASIBILITY STUDY (ECONOMIC)

Item	Quantity	Unit Price F.C. (1,000Rp.)	Unit Price L.C. (1,000Rp.)	Amount F.C. (Mill.Rp.)	Amount L.C. (Mill.Rp.)	Amount Total (Mill.Rp.)
I. Maintenance & Replacement				161.6	32.2	193.8
1. Bandarharjo West				27.4	3.9	31.3
1) Pumping Station	0.80 m3/s			24.5	0.9	25.4
2) Gate Structure	1 place			0.7	0.3	1.0
3) Retarding Basin	0.84 ha			0.8	0.4	1.2
4) Channel Improvement						
- Open Channel; Type D	5 m	281.0	449.0	1.4	2.2	3.6
5) Related Structure						
- Inspection Road	15 m2	0.4	4.5	0.0	0.1	0.1
2. Asin River Basin				69.2	8.2	77.4
1) Pumping Station	5.70 m3/s			61.2	2.3	63.5
2) Gate Structure	1 place			2.6	0.7	3.3
3) Retarding Basin	2.67 ha			3.0	1.4	4.4
4) Channel Improvement						
- Open Channel; Type D	5 m	371.0	603.0	1.9	3.0	4.9
5) Related Structure						
- Bridge	1 pc			0.5	0.4	0.9
- Inspection Road	80 m2	0.4	4.5	0.0	0.4	0.4
3. Bandarharjo East				40.8	6.0	46.8
1) Pumping Station	2.00 m3/s			36.8	1.5	38.3
2) Gate Structure	1 place			0.6	0.2	0.8
3) Retarding Basin	0.93 ha			1.9	1.8	3.7
4) Channel Improvement						
- Open Channel; Type D	5 m	296.0	474.0	1.5	2.4	3.9
5) Related Structure						
- Inspection Road	20 m2	0.4	4.5	0.0	0.1	0.1
4. Semarang River				1.7	1.5	3.2
1) Channel Improvement						
- Open Channel; Type A	5 m	178.0	49.0	0.9	0.2	1.1
- Open Channel; Type D	0 m	521.0	742.0	0.0	0.0	0.0
- Open Channel; Type F	0 m	45.0	12.0	0.0	0.0	0.0
2) Related Structure						
- Revetment; Type D	20 m2	11.0	25.0	0.2	0.5	0.7
- Revetment; Type E	10 m2	60.0	66.0	0.6	0.7	1.3
- Inspection Road	25 m2	0.4	4.5	0.0	0.1	0.1
5. Baru River				7.8	9.7	17.5
1) Gate Structure	1 place			0.5	0.2	0.7
2) Channel Improvement						
- Open Channel (Type D)	5 m	312.0	577.0	1.6	2.9	4.5
- Open Channel (Type G)	5 m	1,142.0	1,290.0	5.7	6.5	12.2
2) Related Structure						
- Inspection Road	25 m2	0.4	4.5	0.0	0.1	0.1
6. Secondary Channel Improvement				0.0	0.0	0.0
7. Miscellaneous Works				14.7	2.9	17.6
II. Dredgeing				4.6	4.6	9.2
1. Bandarharjo West	1 L.S.			0.8	0.8	1.6
2. Asin River Basin	1 L.S.			1.3	1.3	2.6
3. Bandarharjo East	1 L.S.			0.7	0.7	1.4
4. Semarang River	1 L.S.			1.0	1.0	2.0
5. Baru River	1 L.S.			0.8	0.8	1.6
III. Operation & Administration				0.0	111.2	111.2
1. Electricity Charge				0.0	70.0	70.0
2. Administration Cost				0.0	41.2	41.2
Total				166.0	148.0	314.0

Table XII.5.13 (5/5) ANNUAL OMR COST OF HYDROPOWER GENERATION WORKS FOR FEASIBILITY STUDY (ECONOMIC)

Item	Quantity	Unit Price (1,000 Rp.) F.C.	Unit Price (1,000 Rp.) L.C.	Amount (Mill.Rp.) F.C.	Amount (Mill.Rp.) L.C.	Total (Mill.Rp.)
I. Maintenance & Replacement				216.2	30.5	246.7
1. Powerhouse				5.1	5.0	10.1
- Excavation (Ripping & Blasting)	55 m3	6.8	5.0	0.4	0.3	0.7
- Reinforced Concrete	5 m3	114.0	123.0	0.6	0.6	1.2
- Powerhouse Building	1 L.S.			4.1	4.1	8.2
2. Tailrace				0.9	1.0	1.9
- Excavation (Ripping & Blasting)	10 m3	6.8	5.0	0.1	0.1	0.2
- Common Concrete	5 m3	47.3	57.3	0.2	0.3	0.5
- Reinforced Concrete	5 m3	114.0	123.0	0.6	0.6	1.2
3. Electrical & Mechanical Equipment				188.9	21.0	209.9
- Turbine ; 1,500 kw	1 set			58.9	6.6	65.5
- Generator ; 1,700 kVA	1 set			27.8	3.1	30.9
- Transformer ; 6.6/20 kVA	1 set			6.6	0.7	7.3
- Inlet Valve	1 set			6.6	0.7	7.3
- Control & Switchyard Equipment	1 set			75.3	8.4	83.7
- Draft Gate	2 set			7.8	0.9	8.7
- Outlet Gate	1 set			5.9	0.6	6.5
4. Distribution Line ; 20 kV	1 L.S.			1.6	0.7	2.3
5. Miscellaneous Works	1 L.S.			19.7	2.8	22.5
II. Operation & Administration				0.0	32.3	32.3
Total				216.2	62.8	279.0

XIII HYDROPOWER GENERATION PLAN

XIII HYDROPOWER GENERATION PLAN

TABLE OF CONTENTS

		Page
CHAPTER 1	GENERAL.....	XIII-1
CHAPTER 2	PRESENT CONDITION OF ELECTRIC POWER GENERATION IN CENTRAL JAWA AREA.....	XIII-2
CHAPTER 3	HYDROLOGICAL STUDY ON HYDROPOWER GENERATION.....	XIII-4
3.1	Master Plan.....	XIII-4
3.2	Feasibility Study.....	XIII-8
CHAPTER 4	HYDROPOWER PLAN AND POWER GENERATION FACILITY.....	XIII-11
4.1	General Concept of Jatibarang Hydropower Plan.....	XIII-11
4.2	Location and Layout of Hydropower Station.....	XIII-12
4.3	Planning of Power Generation Facilities.....	XIII-13
4.4	Study on Hydropower Station and Transmission Line.....	XIII-16
4.5	Mode of Operation/Control of Power Station.....	XIII-17

LIST OF TABLES

Table No.	Title	Page
XIII.3.1	Hydropower Generation Potential.....	XIII-19
XIII.3.2	Estimated Monthly Energy Production.....	XIII-20
XIII.3.3	Monthly Energy Production of Jatibarang Hydropower Plant.....	XIII-24
XIII.4.1	Comparison of Turbine Types.....	XIII-25

LIST OF FIGURES

Figure No.	Title	Page
XIII.4.1	Section of Penstock and Hydropower Station.....	XIII-26
XIII.4.2	Downstream View of Hydropower Station.....	XIII-27
XIII.4.3	Plan of Hydropower Station.....	XIII-28
XIII.4.4	Section of Hydropower Station.....	XIII-29
XIII.4.5	Single Line Diagram.....	XIII-30
XIII.4.6	Plan of Transmission Line.....	XIII-31

CHAPTER 1 GENERAL

In accordance with the policy of the Indonesian government to save fuel, all flood control or water resources development projects involving construction of dam shall include a study on hydropower generation. Since the priority project in the flood control and water resources development plans in this present study includes a dam construction project, a study on hydropower generation has been conducted accordingly.

CHAPTER 2 PRESENT CONDITION OF ELECTRIC POWER GENERATION IN CENTRAL JAWA AREA

Electric utilities in Indonesia are managed and controlled mainly by the State Electricity Corporation (PLN). PLN's utilities had the generating capacity of 9,188 MW which produced 38,731 GWh in 1990/1991, corresponding to 57% of the total generation capacity and 51% of the total energy production in Indonesia, respectively.

As of 1991/92, the generation capability of the Jawa-Bali Power System of PLN was 6,189 MW in installed capacity (approximately 68% of the capacity of all PLN facilities) and about 31,306 GWh in generated energy. The Jawa-Bali Power System include the major power stations of Mrica Hydro (184.5 MW) and Tambak Steam Oil (300 MW) in Central Jawa.

The major power sources located in West Jawa, Central Jawa and East Jawa are listed below. In Jawa Island, a 500 kV trunk transmission line runs from Suralaya in West Jawa to Surabaya in East Jawa. In addition, networks of 150 kV and 70 kV transmission lines have been constructed to make practical use of the trunk line.

	West Jawa	Central Jawa	East Jawa
Hydropower (MW)	Sagulin (701) Cirata (504) Jatiluhur (150)	Mrica (184.5) Garung (26.4) Jelok (20.5) W. Lintang (16.0) Wonogiri (12.4)	Karangkates (105) Wulingi (54)
Steam-oil (MW)	Muara Karang (700) Priok (150) Suralaya (1,600)	Tambak (300)	Gresik (600) Perak (150)
Gas Turbine (MW)	Priok (267) Pulogadung (130) Sunyaragi (80)	Tambakiorok (21.4) Pandeam Lamper (54)	Gresik (62)

To cope with the sharply increasing demand for electricity, the government of Indonesia is planning to reinforce the generating capability of PLN and the private sector all over the country. The power capacity of Jatibarang Hydropower Station, a component of a multipurpose dam, is only 1,500 kW in installed capacity and 7×10^6 kWh in annual energy production, which is regarded to be minor as compared with the power sources. The energy generated by Jatibarang Hydropower Station will be easily consumed within the electricity supply areas in the vicinity of Semarang City through the proposed low voltage networks of 20 kV transmission line and the existing distribution lines. It is likely that Jatibarang Hydropower Station will play an important role in providing a power source for the expanding rural electrification in the areas, which is still 26.7% in electrification (house-wise) in Jawa Island. Furthermore, this will be useful to stabilize the voltage fluctuation in 20 kV transmission lines in the areas.

CHAPTER 3 HYDROLOGICAL STUDY ON HYDROPOWER GENERATION

3.1 Master Plan

Objective

As described in CHAPTER 3 of SECTOR VII, WATER RESOURCES DEVELOPMENT PLAN, four (4) reservoirs in three rivers are proposed for water supply. The development of the reservoirs also makes possible the development of hydropower generation.

These four reservoirs have the surplus storage capacity exceeding the future water demand, so that the storage that can create the firm discharge is allocated to two reservoirs; namely, Jatibarang and Mundingan, because water is not released from these two reservoirs in a relatively long period of over a year due to the considerably large basin downstream.

The objective of the hydrological study is to estimate the hydropower generation potential in each reservoir to be planned in the master plan of water resources development.

Methodology for the Estimation of Hydropower Potential

The hydropower potential is estimated applying a common criteria to the proposed four reservoirs. Hereinafter described are the details of basic data, assumptions and methodology to the simulation.

(1) Hydrological Data of Respective Reservoirs

The 5-day release from the reservoirs and the reservoir water level for 30 years based on the

computation of water balance described in CHAPTER 3 of SECTOR VII, WATER RESOURCES DEVELOPMENT PLAN, are applied as hydrological data. Jatibarang and Mundingan reservoirs can release the firm discharge for hydropower generation with the said extra storage capacity; while, the firm discharge for Kedung Suren and Babon reservoirs which can be properly utilized for water supply and irrigation purposes, is determined as the average discharge of 99% flow regime for 30 years. Firm discharge means the minimum discharge to generate hydropower energy.

(2) Maximum Discharge for Hydropower

Maximum discharge for hydropower which is the basic factor to design the installed capacity, is determined to be the smaller quantity between the discharge equivalent to the annual water utilization factor of 60% and the discharge of 3.33 times the firm discharge, which means that the firm discharge is equivalent to 30% of the installed capacity according to the turbine efficiency.

(3) Formula to Estimate Hydropower Potential

The installed capacity is calculated by the following formula:

$$Pmax = 9.8*Qmax*(Hmax-Ht-Hlmax)*C$$

where,

Pmax : Installed capacity (kW)

Qmax : *Maximum discharge for hydropower (m^3/s)*

Hmax : *Reservoir normal water level (EL.m)*

Hlmax : *Maximum head loss (m) (calculated on the assumption that friction loss is dominant as shown in Table XIII.3.1)*

Ht : *Tail water level (EL.m) (as set up in Table XIII.3.1)*

C : *Combined efficiency of turbine and generator (assumed to be 83%)*

Energy production is estimated as the total generated energy computed on a 5-day basis by the following formula:

$$Eti = 9.8*Qi*(Hi-Ht-Hli)*Cei*Ti$$

where,

Eti : *Energy output of i-th 5-day for the estimate of energy production (kWh)*

Qi : *Discharge used for energy generation (m^3/s)*

If, Qrelease > or = Qmax: Qi = Qmax
If, Qrelease < Qmax: Qi = Qrelease

Hi : *Reservoir water level on the i-th 5-day (EL.m)*

Hli : *Head loss on the i-th 5-day (m) ($=Hlmax*(Qi)^2/(Qmax)^2$)*

Cei : *Combined efficiency of turbine and generator (varying from 84% to 50% with the ratio of Qi to Qmax)*

Ti : *hours in 5-day (hour)*

Estimated Hydropower Potential

Annual generated energy is computed for the proposed four reservoirs, as presented in Table XIII.3.1, by applying the methodology mentioned above. Monthly estimated energy for 30 years is also presented in Table XIII.3.2.

Annual generated energy is summarized in the following table:

Summary of Hydropower Potential

Reservoir	Installed Capacity (kW)	Annual Energy Production (MWh)	Annual Plant Factor (%)
Jatibarang:			
- Stage I	1,050	5,800	63
- Stage II	1,050	6,100	66
- Stage III	2,510	11,400	52
Mundingan:			
- Stage II	650	3,700	65
- Stage III	1,540	7,100	53
Kedung Suren	1,840	10,800	67
Babon	310	2,400	88

Note:

Stage I : Operation with Jatibarang Reservoir only.

Stage II : Operation as series reservoirs with Jatibarang and Mundingan reservoirs.

Stage III: Operation as series reservoirs and receiving water through interbasin transfer from Blorong River.

The annual plant factor is the ratio of annual energy production of a power plant to the amount of energy calculated by multiplying the installed capacity by the total hours a year, and the ratio is usually expressed in percent. This factor is slightly higher than the conventional standard values of 40 to 50% for small-scale hydropower plants.

3.2 Feasibility Study

According to the study result of CHAPTER 4 of SECTOR VII, WATER RESOURCES DEVELOPMENT PLAN, the optimum hydropower generation plan of Jatibarang reservoir is determined as the run-off-river type without a hydropower storage from the economical point of view. Namely, only the discharge from the reservoir for water supply purpose is utilized for power generation.

The estimation procedure of hydropower energy production is almost the same as described in Section 3.1. To elaborate figuring out the energy production, the following factors are employed paying more attention to details:

(1) Maximum Discharge and Installed Capacity

The maximum discharge for hydropower, which is the basic data to design the installed capacity, refers to the average for 30 years equivalent to the annual water utilization factor of 60% on the flow-duration curves of reservoir released water. As a result, the maximum discharge for hydropower is estimated

at 2.87 m^3/s, and the installed capacity of the hydropower plant is calculated at 1,500 kW.

(2) Ineffectual Release

Turbines and generators shall not be operated under the conditions of both extremely small discharge and extremely low head to avoid cavitation and adverse vibration. Ineffectual release for hydropower generation which is not introduced into the turbine, is defined as the discharge with which energy output is less than 30% of the installed capacity. The ineffectually released water will thereby pass through the outlet pipe, so that the firm discharge is not needed to be determined in this case.

(3) Combined Efficiency of Turbine and Generator

Since the approximate features of the hydropower plant are figured out in this case, the combined efficiency can be determined in more detail.

On the assumption that the specific speed of the turbine (NS) is 200 m-kW, the combined efficiency was derived from the standard curve of Francis turbines with the installed capacity. The combined efficiency of the turbine and the generator ranges from 0.847 to 0.00, in proportion to the value of Qi*(Hi-Ht-Hli)/Qmax*(Hmax-Ht-Hlmax) of which each definition is explained in Section 3.1.

As the hydrological study results, the principal features of hydropower generation are

production for 30 years is also computed as shown in Table XIII.3.3.

Principal Hydrological Features of Jatibarang Hydropower Plant

NWL	EL.155.3 m
LWL	EL.136.6 m
Tail Water Level	EL. 90.0 m
Head Loss	2.0 m
Effective Maximum Head	63.3 m
Maximum Discharge for Hydropower	2.87 m^3/s
Installed Capacity	1,500 kW
Annual Energy Production	6,710 MWh
Annual Plant Factor	51 %

CHAPTER 4 HYDROPOWER PLAN AND POWER GENERATION FACILITY

4.1 General Concept of Jatibarang Hydropower Plan

Jatibarang Hydropwer Station is planned to be constructed as an additional facility to the Jatibarang Multipurpose Dam principally aiming at flood control and water resources development. Therefore, the priority of the reservoir operation should always be given to flood control and water supply. Since reservoir water will be released downstream through the penstock line(s) to be used for the respective purposes, the output of the power facility is designed to meet the maximum discharge for the principal purposes.

Water resources development on Kreo River is divided into two phases. The first phase consists of the construction of Jatibarang Dam, and the second phase consists of the construction of Mundingan Dam and the interbasin transfer. Therefore, available water for the hydropower generation will be increased stepwisely.

From this implementation situation, power generating equipment and appurtenant equipment will be installed in two phases. The other facilities such as intake, penstock and powerhouse will be installed or constructed in the first phase to meet the second phase requirement.

4.2 Location and Layout of Hydropower Station

Location

The location of the hydropower station is proposed at the immediate downstream of the dam on the right bank of Kreo River at about EL. 95 m, taking the following merits into consideration:

(1) To have easy access to the site from the existing public road for the transportation of construction materials and operation and maintenance of the station after completion;

(2) To save hydraulic head loss; and

(3) To have easy connection of a transmission line to the existing 20 kV transmission line.

Layout

Water is introduced for power generation from intake facilities located on the front face of the dam, passes through penstock lines embedded in the dam body to turbines, and then discharges by way of tailraces to the downstream of the energy dissipator. Since the penstock is short, surging to be caused by sudden shutdown of the generators is absorbed by the reservoir. Air-vent pipe is installed to prevent the occurrence of vacuum inside the penstocks at the time of draining of water (refer to Figs. IX.3.7 and XIII.4.1).

4.3 Planning of Power Generation Facilities

Selection of Major Equipment

The installed capacity is estimated at 1,500 kW, as mentioned in CHAPTER 3, and selection of the type of major equipment is done in respect of the mode of reservoir operation. The discharge from the dam for water supply to the downstream will fluctuate between 0.7 m^3/s and 3.0 m^3/s, and the reservoir water level will also fluctuate between EL. 155.3 m and EL. 136.6 m; hence, the most effective power generation facility is selected under these conditions (refer to Figs. XIII.4.2 to XIII.4.5).

(1) Turbine

For small power generation, turbines such as Pelton, Francis, Propeller, and Crossflow types are available. The applicability of these turbine types are compared with the conditions shown below, as given in Table XIII.4.1. The Francis type of turbine is selected as the most suitable turbine in due consideration of the effective head and the amount of discharge available for power generation.

	Maximum	Minimum
Q	3.0 m^3/s	0.7 m^3/s
He	63.3 m (EL. 155.3 - EL 90.0 m - head loss 2.0 m)	44.6 m (EL. 136.6 - EL. 90.0 m - head loss 2.0 m)
P	1,500 kW	450 kW

The relation between revolution speed (rpm) and specific speed (NS) is studied as follows:

$$NS = N \times \frac{P^{1/2}}{H^{5/4}}$$

where,

NS : specific speed (m-kW)
N : revolution speed (rpm)
P : turbine output (kW)
H : effective head (m)

If, Head H = 63.3 m:

NS = 216.9 m-kW at 1,000 rpm
NS = 153.3 m-kW at 750 rpm

If, Head H = 44.3 m:

NS = 338.3 m-kW at 1,000 rpm
NS = 254.0 m-kW at 750 rpm

It is known from the above study that NS is within the range of 153.3 m-KW to 254.0 m-kW at the revolution speed of 750 rpm, which favorably falls within the intermediate range of the NS values (50 to 300 m-kW) for stable operation of the Francis type of turbine. Accordingly, the revolution speed of 750 rpm is selected for the Francis type of turbine.

There are two types of Francis turbine, namely, vertical shaft type and horizontal shaft type, and the merits and demerits are compared as shown in the following table.

Comparison Item	Vertical Shaft Type	Horizontal Shaft Type
Required Floor Area	small	big
Power Station Height	high	low
Capacity of Overhead Crane	big	small
Installation Work	not easy	easy
Foundation Work	not econo-mical	economical (by using exposure type casing)
Total Cost	expensive	cheap
Conclusion	not appli-cable	applicable

From the above comparison, the horizontal shaft type of 750 rpm Francis turbine is selected.

(2) Generator

In consideration of the power factor angle of 0.85 to 0.90 of existing generators in Jawa Island, the capacity of the generator becomes as follows:

Generator Capacity kVA = turbine output (1,500 kW) divided by 0.85 to 0.90

From the above, the generator capacity is set at 1,700 kVA. Thus, the synchronous speed becomes 750 rpm.

Hence, the generator is a synchronous type generator, 3 phase, 50 Hz, 6.6 kV, 1,700 kVA.

(3) Main Transformer

Since the generator capacity is set at 1,700 kVA, an AC transformer with a capacity of 1,700 kVA, 3 phase, 50 Hz can satisfactorily be used. The transformer is of outdoor type and installed adjacent to the powerhouse building. Moreover, the generator voltage of 6.6 kVA should be stepped up to 20 kVA, 3 phase, 50 Hz, to coincide with the voltage of the existing PLN distribution line.

4.4 Study on Hydropower Station and Transmission Line

Hydropower Station

Since the proposed site of the hydropower station is located at an area with steep topographical feature, in designing the layout of the hydropower station, reduction of the excavation volume is taken into consideration. As a result of the layout plan mentioned in Section 4.2, the power station is located at the immediate downstream of the dam, as close as possible to the spillway. To avoid the influence on the tailrace water level which may be caused by the energy dissipator, the outlet of the tailrace is placed at the downstream side of the energy dissipator where the water surface is rather stable.

The powerhouse is designed as a reinforced concrete building with a space to accommodate the required equipment for the second phase (refer to Figs. XIII.4.2 to XIII.4.4).

Transmission Line

PLN single phase, 20 kV distribution line has been installed in the vicinity of the dam site. However, the capacity of this line is not enough to transmit the power generated at the Jatibarang Hydropower Station. Therefore, the power generated at the Jatibarang Hydropower Station shall be transmitted to the existing PLN three phase, 20 kV transmission networks through a new 2 km long transmission line of 20 kV, 3 phase and 3 wire. Alluminum Cable Steel Reinforced (ACSR) is proposed for the power cable of the transmission line and 13 steel towers will be constructed between the hydropower station and the existing PLN line as shown in Fig. XIII.4.6.

4.5 Mode of Operation/Control of Power Station

For the operation of the hydropower station, two modes will be employed, namely, remote operation and direct operation.

Remote Control Operation (Normal Operation)

Since reservoir water will be released for municipal water and maintenance flow continuously and rather constantly, automatic control of the power station can be achieved by inputting occasionally such variable information as rainfall, inflow to the reservoir, water level of the reservoir and tailrace. Load control under normal operation is automatically performed from the remote control center in the dam operation and maintenance office which will be constructed near the dam site according to the sequential control program. Thus, operators do not always stay in the power station. Maintenance staff shall undertake patrol inspection of the power

station, dam and transmission facilities, thereby maintaining them in good condition.

Direct Operation (Emergency Operation)

At the time of failure of the remote control, the staff of the power station shall be engaged in direct start-up, operation and control through manual operation at the operation control panel located in the power station.

Measures at Emergency in Power Station

When any equipment of the power station is in failure while under remote control and restoration of functions will take a long time, the reservoir water can be discharged downstream in a necessary amount through an outlet valve installed along the penstock. The valve is then closed again when the power station has recovered from the failure and normal remote operation has started.

TABLES

Table XIII.3.1 HYDROPOWER GENERATION POTENTIAL

Reservoir	Jatibarang			Mundingan		Kedung	Babon
	Stage I	Stage II	Stage III	Stage II	Stage III	Suren	
Normal Water Level	EL.153.0m	EL.153.0m	EL.153.0m	EL.224.6m	EL.224.6m	EL. 69.7m	EL. 69.4m
Low Water Level	EL.138.2m	EL.128.1m	EL.128.1m	EL.207.9m	EL.207.9m	EL. 60.3m	EL. 55.7m
Tail Water Level	EL. 90.0m	EL. 90.0m	EL. 90.0m	EL.185.0m	EL.185.0m	EL. 40.0m	EL. 35.0m
Firm Discharge	0.6m3/s	0.6m3/s	1.8m3/s	0.6m3/s	1.8m3/s	2.4m3/s	0.4m3/s
Maximum Discharge for Hydropower	2.1m3/s	2.1m3/s	5.0m3/s	2.1m3/s	5.0m3/s	8.0m3/s	1.3m3/s
Head Loss	2.0m	2.0m	2.0m	2.0m	2.0m	1.7m	5.6m
Effective Maximum Head	61.0m	61.0m	61.0m	37.6m	37.6m	28.0m	28.8m
Installed Capacity	1,050 kW	1,050 kW	2,510 kW	650 kW	1,540 kW	1,840 kW	310 kW
Annual Energy Production	5,800 MWh	6,100 MWh	11,400 MWh	3,700 MWh	7,100 MWh	10,800 MWh	2,400 MWh

Note : Stage I ; Operation with Jatibarang reservoir only
Stage II ; Operation as a series reservoirs with Jatibarang and Mundingan reservoirs
Stage III ; Operation as a series reservoirs and receiving water through interbasin transfer from Blorong River

Table XIII.3.2 (1/4) ESTIMATED MONTHLY ENERGY PRODUCTION (Jatibarang Res. Stage I)

unit:MWh

YEAR	MONTH 6	7	8	9	10	11	12	1	2	3	4	5	TOTAL
1960	647	572	453	303	308	524	422	737	657	706	575	679	6583
1961	381	300	172	326	618	479	168	150	571	737	714	735	5351
1962	573	440	385	202	160	333	682	737	636	737	713	542	6140
1963	383	257	184	466	571	587	301	150	140	401	569	528	4537
1964	306	160	214	411	215	205	232	683	665	737	648	452	4928
1965	384	254	161	370	644	394	220	248	666	737	649	521	5248
1966	462	246	193	406	307	207	150	716	636	703	714	580	5320
1967	355	230	212	518	707	514	151	358	677	604	620	653	5599
1968	683	674	512	357	250	500	630	724	666	737	714	724	7171
1969	650	556	404	237	327	440	604	728	666	735	714	737	6798
1970	641	612	379	376	288	619	737	737	666	737	714	729	7235
1971	714	649	497	358	599	591	715	737	604	737	641	642	7484
1972	454	338	192	295	621	376	192	382	472	678	530	520	5050
1973	347	356	180	215	212	659	711	700	666	737	697	665	6145
1974	455	360	257	271	605	395	669	691	663	737	714	734	6551
1975	510	392	245	428	512	695	694	737	690	737	684	615	6939
1976	495	369	220	211	469	341	150	453	559	737	672	498	5174
1977	528	244	195	489	704	468	150	358	666	720	559	473	5554
1978	364	359	211	333	231	168	518	737	666	737	714	737	5775
1979	635	481	352	252	290	325	335	685	690	694	714	641	6094
1980	477	342	415	172	266	600	730	737	666	593	327	545	5870
1981	337	413	171	370	664	612	150	150	356	737	706	453	5119
1982	259	167	400	651	712	542	300	150	135	150	145	606	4217
1983	246	175	451	669	269	350	224	150	497	540	315	207	4093
1984	224	178	402	367	264	226	632	311	382	483	425	210	4104
1985	184	325	472	449	505	168	179	358	626	737	639	413	5055
1986	528	313	284	173	166	249	227	723	666	727	456	487	4999
1987	307	260	197	493	705	380	358	737	690	737	697	707	6268
1988	491	390	319	157	195	478	665	737	666	737	714	737	6286
1989	709	687	555	409	382	588	692	737	666	737	641	628	7431
TOTAL	13729	11099	9284	10734	12766	13013	12588	16238	17672	20263	18334	17398	173118
AVERAGE	458	370	309	358	426	434	420	541	589	675	611	580	5771

(Jatibarang Res. Stage II) unit:MWh

YEAR	MONTH 6	7	8	9	10	11	12	1	2	3	4	5	TOTAL
1960	656	580	460	338	408	470	452	748	666	716	582	689	6765
1961	386	406	686	699	748	671	497	152	137	530	724	746	6382
1962	580	446	407	539	724	434	152	652	645	748	723	550	6600
1963	388	443	718	724	745	724	417	245	142	163	189	242	5140
1964	346	692	652	724	363	392	569	152	137	652	657	458	5794
1965	390	446	692	724	748	702	339	152	137	267	658	529	5784
1966	469	462	726	724	440	441	300	152	453	713	724	589	6193
1967	360	504	736	724	748	701	248	152	142	152	629	662	5758
1968	692	684	520	362	455	327	639	735	675	748	724	735	7296
1969	659	564	410	453	335	366	555	738	675	746	724	747	6972
1970	649	620	385	448	505	401	748	748	675	748	724	740	7391
1971	724	658	504	364	606	599	725	748	613	748	650	651	7590
1972	460	361	603	724	748	596	426	152	251	152	177	187	4837
1973	260	418	725	702	486	147	152	555	675	748	707	674	6249
1974	461	365	434	449	446	428	678	701	672	748	724	744	6850
1975	517	398	465	282	519	705	704	748	699	748	694	624	7103
1976	501	374	527	714	748	435	322	152	137	652	682	505	5749
1977	535	467	728	724	748	679	257	152	137	503	567	479	5976
1978	369	391	549	337	525	599	225	555	675	748	724	748	6445
1979	644	487	370	444	502	383	382	396	699	704	724	650	6385
1980	483	322	522	637	632	147	549	748	675	601	340	547	6203
1981	360	458	664	724	748	724	152	199	137	152	620	459	5397
1982	402	692	748	724	748	627	430	152	206	309	149	152	5339
1983	431	718	748	724	347	477	459	292	142	224	316	564	5442
1984	563	717	741	171	655	131	152	429	318	194	344	553	4968
1985	714	404	5	99	54	381	309	152	137	152	147	154	2708
1986	158	304	363	608	643	489	510	152	579	738	462	494	5500
1987	346	461	729	724	748	451	152	152	603	748	706	717	6537
1988	498	396	434	666	562	216	587	748	675	748	724	748	7002
1989	719	697	562	415	391	596	701	748	675	748	650	636	7538
TOTAL	14720	14935	16813	16691	17075	14439	12788	12557	13189	16548	17165	16973	183893
AVERAGE	491	498	560	556	569	481	426	419	440	552	572	566	6130

Table XIII.3.2 (2/4) ESTIMATED MONTHLY ENERGY PRODUCTION (Jatibarang Res. Stage III)

unit:MWh

YEAR	MONTH 6	7	8	9	10	11	12	1	2	3	4	5	TOTAL
1960	1055	659	540	516	612	555	910	1789	1522	1518	885	1361	11922
1961	528	554	880	1101	1471	1232	778	533	481	1172	1626	1461	11817
1962	904	714	594	663	941	743	533	1625	1355	1713	1512	736	12033
1963	568	592	958	1284	1415	1423	849	596	498	533	516	533	9765
1964	562	876	977	1229	764	693	617	533	481	986	1117	533	9368
1965	516	590	887	1190	1499	1169	736	533	481	533	516	533	9183
1966	516	607	983	1224	914	745	607	533	481	1283	1746	767	10406
1967	516	640	1026	1337	1576	1307	610	533	498	533	1344	1333	11253
1968	1449	1041	576	516	588	516	1373	1529	1657	1835	1776	1164	14020
1969	940	598	533	592	619	563	580	1531	1651	1835	1694	1246	12382
1970	960	694	533	529	677	525	1783	1835	1657	1835	1701	1399	14128
1971	1455	810	543	516	718	1313	1536	1780	1146	1835	1227	1257	14136
1972	535	533	746	1115	1474	1075	771	533	531	533	516	533	8895
1973	522	624	969	998	822	516	533	734	1482	1835	1452	1135	11622
1974	532	533	575	665	727	740	1452	1521	1596	1819	1583	1330	13073
1975	578	533	607	516	572	1491	1212	1835	1672	1810	1123	768	12717
1976	517	533	662	1002	1313	935	579	533	481	533	897	533	8518
1977	734	611	988	1308	1573	1214	551	533	481	533	516	533	9575
1978	516	533	685	586	743	772	566	533	1447	1686	1776	1450	11293
1979	1072	533	533	602	732	648	650	995	1558	1631	1720	1315	11989
1980	646	533	568	808	1025	516	986	1814	1635	1224	1145	1171	12071
1981	543	950	839	1190	1523	1452	533	536	481	1309	1672	808	11836
1982	550	885	1246	1484	1583	795	476	533	481	607	516	533	9689
1983	588	947	1297	1506	805	945	846	569	498	542	543	690	9776
1984	756	965	1248	516	1105	812	533	669	597	533	589	701	9024
1985	974	1105	1317	1122	1200	685	637	533	481	896	1501	633	11084
1986	1017	533	580	750	876	731	821	1029	1612	1700	1020	750	11419
1987	516	637	993	1312	1574	982	533	533	1337	1767	1389	882	12455
1988	516	533	560	842	842	545	843	1704	1657	1759	1662	1660	13123
1989	1284	817	552	516	533	807	1399	1835	1559	1533	915	824	12574
TOTAL	22365	20713	23995	27535	30816	26445	24833	30322	31494	37861	36195	28572	341146
AVERAGE	746	690	800	918	1027	882	828	1011	1050	1262	1207	952	11373

(Mundingan Res. Stage II) unit:MWh

YEAR	MONTH 6	7	8	9	10	11	12	1	2	3	4	5	TOTAL
1960	399	356	285	210	252	287	278	451	402	433	356	417	4126
1961	240	252	416	422	451	405	303	95	86	322	436	450	3878
1962	355	277	252	331	438	264	95	394	391	451	436	338	4022
1963	241	274	434	436	450	436	255	151	89	102	118	151	3137
1964	214	420	394	436	221	239	345	95	86	394	399	284	3527
1965	242	276	420	436	451	424	207	95	86	164	399	324	3524
1966	288	286	439	436	267	270	184	95	275	431	436	360	3767
1967	224	311	445	436	451	424	153	95	89	95	382	402	3507
1968	419	415	321	225	281	203	389	444	407	451	436	444	4435
1969	401	347	254	280	206	227	337	446	407	450	436	451	4242
1970	395	378	239	277	310	245	451	451	407	451	436	446	4486
1971	436	401	311	226	370	364	438	451	373	451	396	396	4613
1972	285	225	369	436	451	361	260	95	155	95	111	117	2960
1973	162	258	439	424	296	92	95	336	407	451	427	409	3796
1974	285	227	269	275	274	264	411	424	406	451	436	449	4171
1975	319	247	287	176	317	426	426	451	422	451	420	382	4324
1976	309	233	324	431	451	264	199	95	86	394	413	310	3509
1977	327	289	440	436	451	412	160	95	86	305	347	296	3644
1978	229	242	337	208	320	365	140	336	407	451	436	451	3922
1979	391	301	230	274	307	234	235	242	422	427	436	395	3894
1980	297	201	321	387	382	92	332	451	407	367	211	335	3783
1981	223	282	404	436	451	436	95	124	86	95	375	283	3290
1982	249	420	451	436	451	379	263	95	129	191	93	95	3252
1983	266	435	451	436	212	290	279	181	89	140	196	347	3322
1984	343	434	447	107	396	88	95	264	194	121	212	340	3041
1985	431	249	21	69	35	235	191	95	86	95	92	97	1696
1986	99	189	225	371	390	298	310	95	350	445	286	303	3361
1987	215	284	441	436	451	274	95	95	364	451	427	433	3966
1988	307	246	269	404	342	135	356	451	407	451	436	451	4255
1989	434	423	346	257	242	362	425	451	407	451	395	388	4581
TOTAL	9025	9178	10281	10150	10367	8795	7802	7639	8008	10027	10415	10344	112031
AVERAGE	301	306	343	338	346	293	260	255	267	334	347	345	3735

Table XIII.3.2 (3/4) ESTIMATED MONTHLY ENERGY PRODUCTION (Mundingan Res. Stage III)

unit:MWh

YEAR	MONTH 6	7	8	9	10	11	12	1	2	3	4	5	TOTAL
1960	656	413	339	323	384	348	566	1100	938	937	553	842	7399
1961	331	347	550	686	912	765	486	334	302	724	1002	903	7342
1962	563	446	372	415	588	465	334	999	838	1055	933	460	7468
1963	356	371	598	798	878	882	529	374	313	334	323	334	6090
1964	352	548	610	764	477	433	385	334	302	611	693	334	5843
1965	323	370	554	741	929	727	460	334	302	334	323	334	5731
1966	323	380	614	762	570	465	380	334	302	793	1074	479	6476
1967	323	401	640	830	975	811	382	334	313	334	830	827	7000
1968	896	649	361	323	368	323	847	944	1018	1127	1091	724	8671
1969	585	375	334	371	388	353	364	943	1014	1127	1042	775	7671
1970	598	435	334	332	424	329	1097	1127	1018	1127	1047	866	8734
1971	900	506	340	323	448	814	950	1095	710	1127	762	779	8754
1972	335	334	467	695	914	668	482	334	333	334	323	334	5553
1973	327	391	605	623	514	323	334	458	915	1127	897	704	7218
1974	333	334	360	416	454	463	895	939	982	1118	977	825	8096
1975	362	334	380	323	359	921	753	1127	1029	1113	699	480	7880
1976	324	334	415	625	816	582	363	334	302	334	559	334	5322
1977	459	383	617	813	973	754	345	334	302	334	323	334	5971
1978	323	334	429	367	465	483	355	334	890	1039	1091	898	7008
1979	664	334	334	377	458	406	407	615	961	1005	1058	812	7431
1980	404	334	356	505	639	323	611	1116	1005	759	712	727	7491
1981	341	591	525	741	943	900	334	336	302	808	1030	504	7355
1982	345	553	775	919	980	492	298	334	302	380	323	334	6035
1983	368	592	806	932	502	588	528	357	313	340	341	432	6099
1984	473	602	777	323	688	507	334	419	374	334	369	439	5639
1985	608	688	819	697	744	429	399	334	302	556	925	397	6898
1986	634	334	364	469	548	457	513	637	992	1048	636	469	7101
1987	323	399	620	815	974	611	334	334	824	1087	857	551	7729
1988	323	334	351	527	526	341	524	1050	1018	1083	1024	1024	8125
1989	796	510	346	323	334	503	863	1127	960	948	571	515	7796
TOTAL	13948	12956	14992	17158	19172	16466	15452	18771	19476	23377	22388	17770	211926
AVERAGE	465	432	500	572	639	549	515	626	649	779	746	592	7064

(Kedung Suren Res.) unit:MWh

YEAR	MONTH 6	7	8	9	10	11	12	1	2	3	4	5	TOTAL
1960	1007	761	564	507	328	1157	1139	1350	1219	1267	1094	1196	11589
1961	754	682	499	516	344	1037	1101	963	886	1315	1268	1200	10565
1962	1006	928	722	507	414	1143	1181	1350	1145	1350	1230	924	11900
1963	807	690	502	520	343	1021	1094	976	884	693	851	718	9099
1964	749	695	513	520	195	1026	1063	1104	1136	1083	910	742	9736
1965	768	703	517	535	363	1054	1076	968	828	656	831	711	9010
1966	761	710	524	536	356	1024	1056	987	774	595	1111	786	9220
1967	766	705	519	536	357	1024	1024	942	1027	1338	1218	1277	10733
1968	1259	1066	723	563	448	1047	1318	1235	1219	1350	1306	1012	12546
1969	872	686	526	512	326	1156	1096	1091	1219	1350	1300	940	11074
1970	897	682	499	510	336	1030	1263	1350	1219	1345	1227	1174	11532
1971	1134	851	585	510	895	1221	1317	1350	1150	1345	1236	1224	12818
1972	747	688	501	519	347	1045	1099	960	829	678	814	1203	9430
1973	860	692	505	484	507	1002	1073	1205	1167	1223	1168	1027	10913
1974	751	682	474	951	1034	1042	1288	1317	1219	1350	1150	1096	12354
1975	765	687	497	845	881	1251	1069	1233	1153	1319	1140	881	11721
1976	755	697	509	525	351	1023	1079	983	879	669	852	751	9073
1977	736	701	518	536	363	1045	1100	963	874	675	858	728	9097
1978	750	695	495	497	286	1030	1067	972	822	626	705	680	8625
1979	884	687	499	500	290	999	1244	1193	1194	1350	1277	1150	11267
1980	823	685	498	514	329	990	1247	1350	1219	1253	1267	1230	11405
1981	826	1171	707	614	597	1023	1149	1350	1207	1266	1306	985	12201
1982	772	685	497	515	344	1036	1075	896	1219	1274	1088	1187	10588
1983	797	694	507	525	310	960	1110	1152	1263	1266	1018	792	10394
1984	751	690	501	741	468	1023	1267	1222	1219	1350	1301	1240	11773
1985	757	678	496	507	933	1169	1132	1327	1185	1343	1249	914	11690
1986	1172	848	655	624	508	1156	1192	1345	1214	1350	1240	977	12281
1987	748	686	498	516	340	1029	1063	1311	1065	1257	967	730	10210
1988	761	701	513	531	317	1016	1066	945	1142	965	1002	1282	10241
1989	960	685	496	504	285	996	1233	1350	1211	1233	972	892	10817
TOTAL	25395	22211	16059	16720	13195	31775	34281	34740	32787	34134	32956	29649	323902
AVERAGE	847	740	535	557	440	1059	1143	1158	1093	1138	1099	988	10797

Table XIII.3.2 (4/4) ESTIMATED MONTHLY ENERGY PRODUCTION (Babon Res.)

unit:MWh

YEAR	MONTH 6	7	8	9	10	11	12	1	2	3	4	5	TOTAL
1960	218	225	225	218	223	179	216	209	204	225	218	225	2585
1961	218	225	225	218	225	218	225	148	35	225	218	225	2405
1962	218	225	225	218	225	199	185	196	204	225	218	225	2563
1963	218	225	225	218	225	218	224	166	157	206	150	182	2414
1964	218	225	225	218	194	208	225	63	84	219	218	225	2322
1965	218	225	225	218	225	218	222	123	72	155	218	225	2344
1966	218	225	225	218	213	218	208	159	131	225	218	225	2483
1967	218	225	225	218	225	218	179	51	137	203	218	225	2342
1968	218	225	225	218	225	207	196	225	204	225	218	225	2611
1969	218	225	225	218	224	199	175	225	204	225	218	225	2581
1970	218	225	225	216	213	199	225	225	204	225	218	225	2618
1971	218	225	225	218	225	218	225	225	211	225	218	225	2658
1972	218	225	225	218	225	216	225	115	188	203	193	216	2467
1973	218	190	225	218	203	130	193	151	204	225	218	225	2400
1974	218	225	225	218	154	201	219	225	204	225	218	225	2557
1975	218	225	225	204	208	203	225	225	211	225	218	225	2612
1976	218	225	225	218	225	204	221	144	165	189	218	225	2477
1977	218	225	225	218	225	218	188	35	133	225	218	225	2353
1978	217	224	225	218	225	218	222	80	204	225	218	225	2501
1979	218	225	225	218	222	204	225	188	211	225	218	225	2604
1980	218	224	222	218	211	152	190	225	204	225	217	224	2530
1981	216	203	225	218	225	218	210	181	179	15	218	225	2333
1982	218	225	225	218	225	218	225	140	203	205	177	173	2452
1983	218	225	225	218	209	182	210	225	79	172	218	225	2406
1984	218	225	53	146	188	98	190	225	123	225	201	182	2074
1985	88	62	13	39	67	66	186	90	164	76	162	223	1236
1986	198	225	225	218	225	218	225	72	55	225	218	225	2329
1987	218	225	225	218	225	180	68	160	211	225	218	225	2398
1988	218	225	224	218	224	214	153	225	204	225	218	225	2573
1989	218	225	225	218	218	216	225	225	204	225	218	225	2642
TOTAL	6387	6528	6362	6273	6346	5855	6105	4946	4993	6143	6332	6600	72870
AVERAGE	213	218	212	209	212	195	204	165	166	205	211	220	2430

Table XIII.3.3 MONTHLY ENERGY PRODUCTION OF JATIBARANG HYDROPOWER PLANT

Installed Capacity : 1,500 kW unit:MWh

Year	Month 6	7	8	9	10	11	12	1	2	3	4	5	Total
1960	740	588	452	111	158	637	361	1,090	820	968	603	896	7,424
1961	376	71	142	496	883	668	143	0	709	1,110	1,038	979	6,615
1962	648	437	229	0	204	136	888	1,110	842	1,051	984	558	7,087
1963	377	0	229	705	764	853	296	0	0	180	708	594	4,706
1964	146	76	379	645	204	142	270	752	954	1,093	856	449	5,966
1965	328	0	130	605	914	513	136	0	877	1,101	842	545	5,991
1966	460	0	296	640	350	188	61	868	870	996	1,074	680	6,483
1967	247	0	324	762	993	475	0	215	939	753	815	789	6,312
1968	893	753	517	249	0	472	776	982	1,003	1,110	1,074	892	8,721
1969	742	567	335	0	196	411	816	1,001	953	1,060	1,032	984	8,097
1970	735	697	262	256	131	779	1,103	1,110	1,003	1,110	1,074	970	9,230
1971	1,006	686	499	253	632	687	940	1,106	730	1,110	744	761	9,154
1972	453	179	0	527	886	496	168	142	510	787	584	499	5,231
1973	213	273	283	385	251	611	889	963	905	1,110	956	822	7,661
1974	454	243	0	154	730	326	907	913	952	1,063	1,032	978	7,752
1975	516	324	0	431	445	925	883	1,110	1,038	1,110	781	640	8,203
1976	498	251	0	317	714	390	0	570	706	1,110	791	558	5,905
1977	594	0	299	731	989	595	0	215	1,003	1,004	610	475	6,515
1978	306	100	0	212	134	59	458	1,103	1,003	1,103	1,061	1,019	6,558
1979	782	481	242	71	189	213	171	942	1,007	903	991	839	6,831
1980	501	197	365	121	430	494	1,052	1,089	979	670	174	544	6,616
1981	182	320	76	605	938	883	0	0	176	1,110	995	472	5,757
1982	0	139	642	919	893	102	128	0	0	0	666	904	4,393
1983	58	218	696	941	252	401	274	0	460	578	143	0	4,021
1984	144	291	644	56	441	207	605	177	334	394	394	0	3,687
1985	288	502	718	571	635	86	92	215	839	1,110	866	410	6,332
1986	555	65	116	0	203	129	170	877	1,003	963	455	502	5,038
1987	115	80	302	735	990	440	215	1,110	1,038	1,110	983	861	7,979
1988	494	323	142	118	234	333	931	1,053	1,003	1,110	1,074	1,105	7,920
1989	989	812	565	405	192	724	940	1,085	949	1,051	712	663	9,087
Total	13,840	8,673	8,884	12,021	14,975	13,375	13,673	19,798	23,605	27,928	24,112	20,388	201,272
Average	461	289	296	401	499	446	456	660	787	931	804	680	6,710

Table XIII.4.1 COMPARISON OF TURBINE TYPES

Type of Turbine	Pelton	Crossflow	Francis	Propeller
Applicable Head	40 - 300 m	20 - 60 m	20 - 300 m	2 - 20 m
Discharge	0.05 - 2.0 m^3/s	0.05 - 4.0 m^3/s	0.2 - 6 m^3/s	0.05 - 6 m^3/s
Output	20 - 5,000 kW	20 - 1,000 kW	20 -5,000 kW	3 - 1,000 kW
Specific Speed (NS)	14 - 23 m-kW	40 - 150 m-kW	50 - 300 m-kW	400 - 800 m-kW
NS at Head 63.3 m	-	-	$NS = \frac{20,000}{63.3+20} + 30$ = 270 m-kW	$NS = \frac{20,000}{63.3+20} + 50$ = 290 m-kW
NS at Head 44.6 m	-	-	$NS = \frac{20,000}{44.6+20} + 30$ = 341 m-kW	$NS = \frac{20,000}{44.6+20} + 50$ = 361 m-kW
Restriction Factor	Maximum Discharge is less than 3.0 m^3/s	Applicable Output is less than 1,500 kW	No restriction	Applicable Head is less than 44.6 m
Conclusion	NA	NA	AP	NA

Note: AP = applicable; NA = not applicable

FIGURES

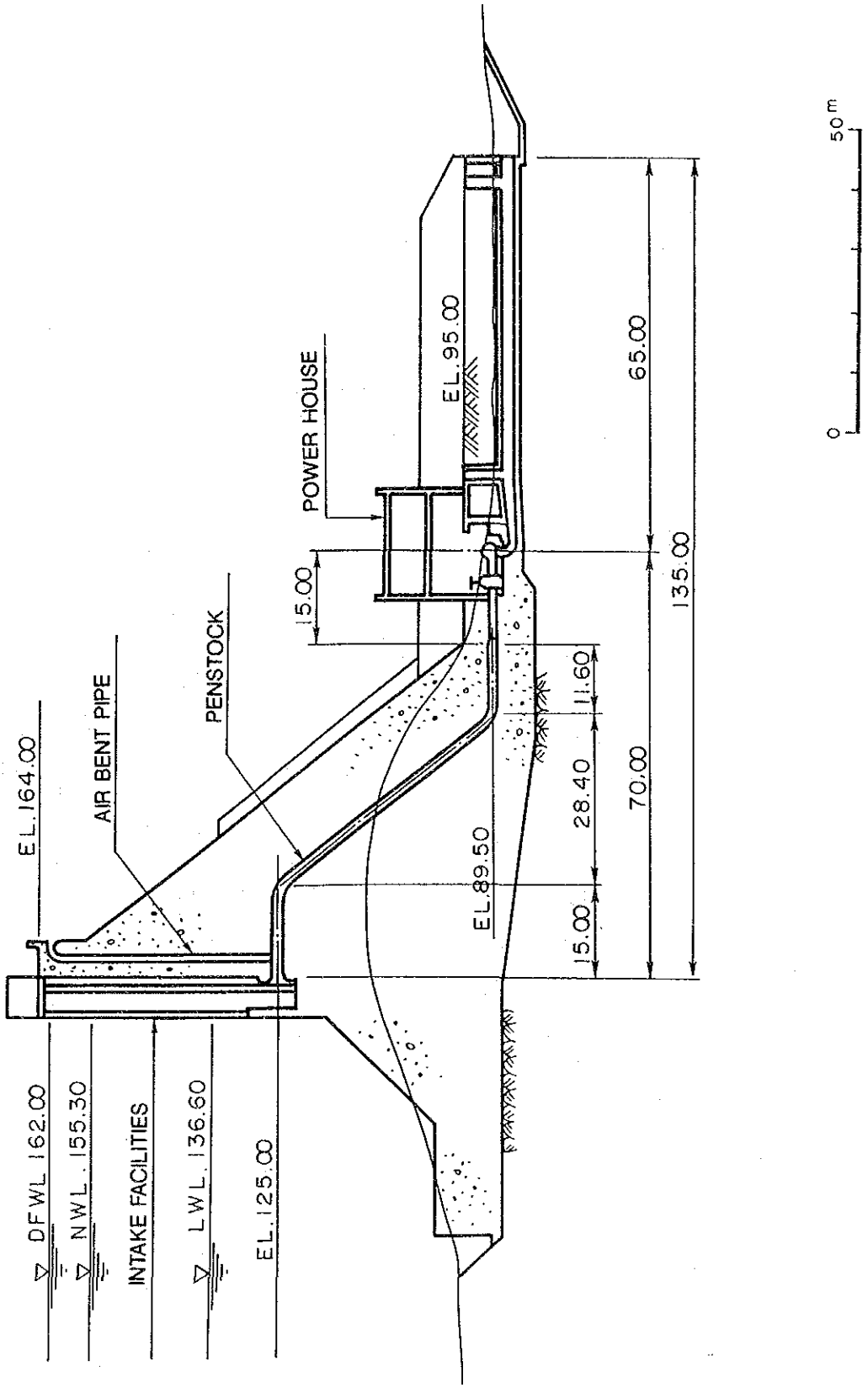

MASTER PLAN ON WATER RESOURCES DEVELOPMENT AND FEASIBILITY STUDY FOR URGENT FLOOD CONTROL AND URBAN DRAINAGE IN SEMARANG CITY AND SUBURBS JAPAN INTERNATIONAL COOPERATION AGENCY	Fig. XIII.4.1 SECTION OF PENSTOCK AND HYDROPOWER STATION

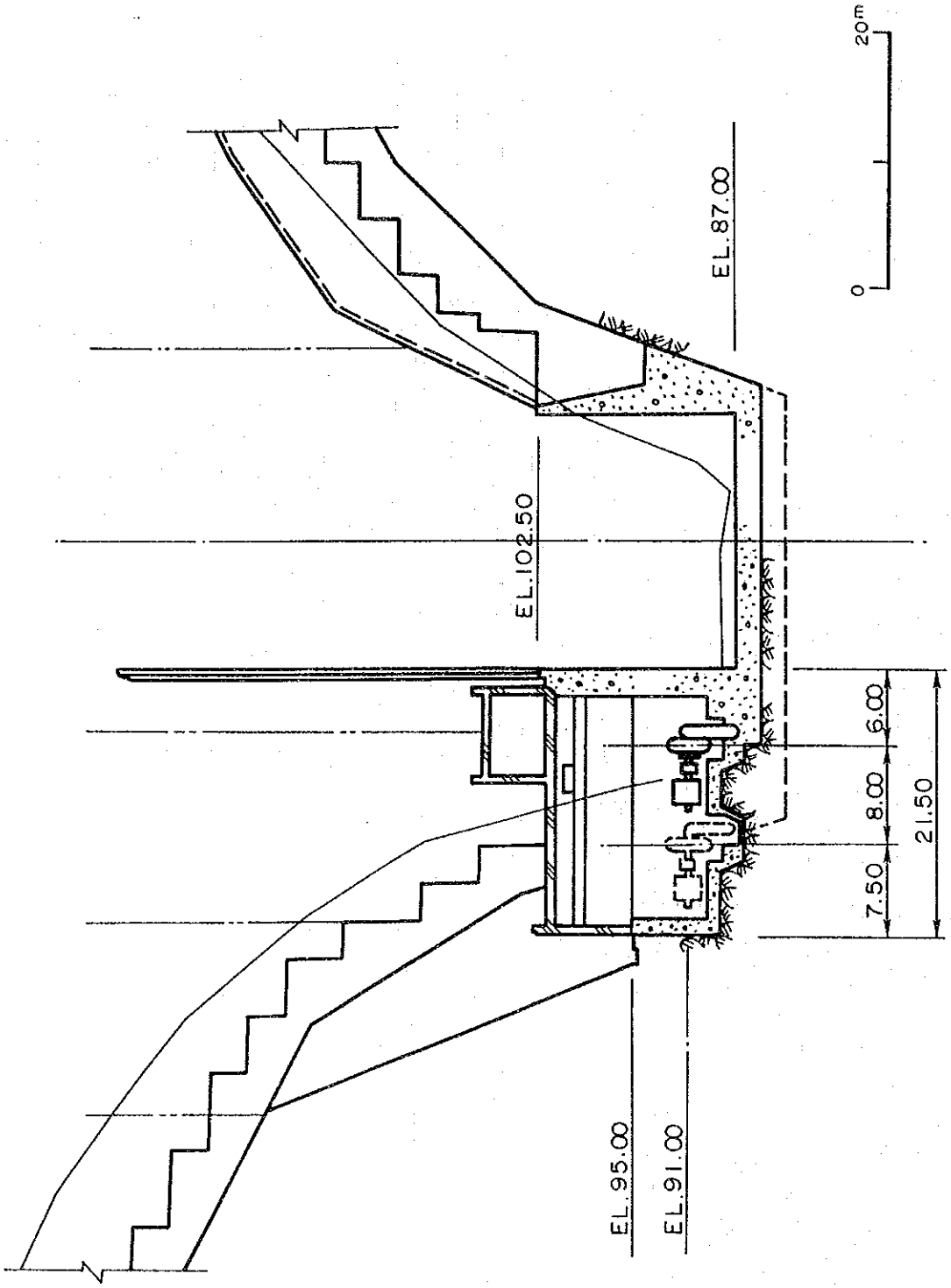

MASTER PLAN ON WATER RESOURCES DEVELOPMENT AND FEASIBILITY STUDY FOR URGENT FLOOD CONTROL AND URBAN DRAINAGE IN SEMARANG CITY AND SUBURBS

JAPAN INTERNATIONAL COOPERATION AGENCY

Fig. XIII.4.2
DOWNSTREAM VIEW OF HYDROPOWER STATION

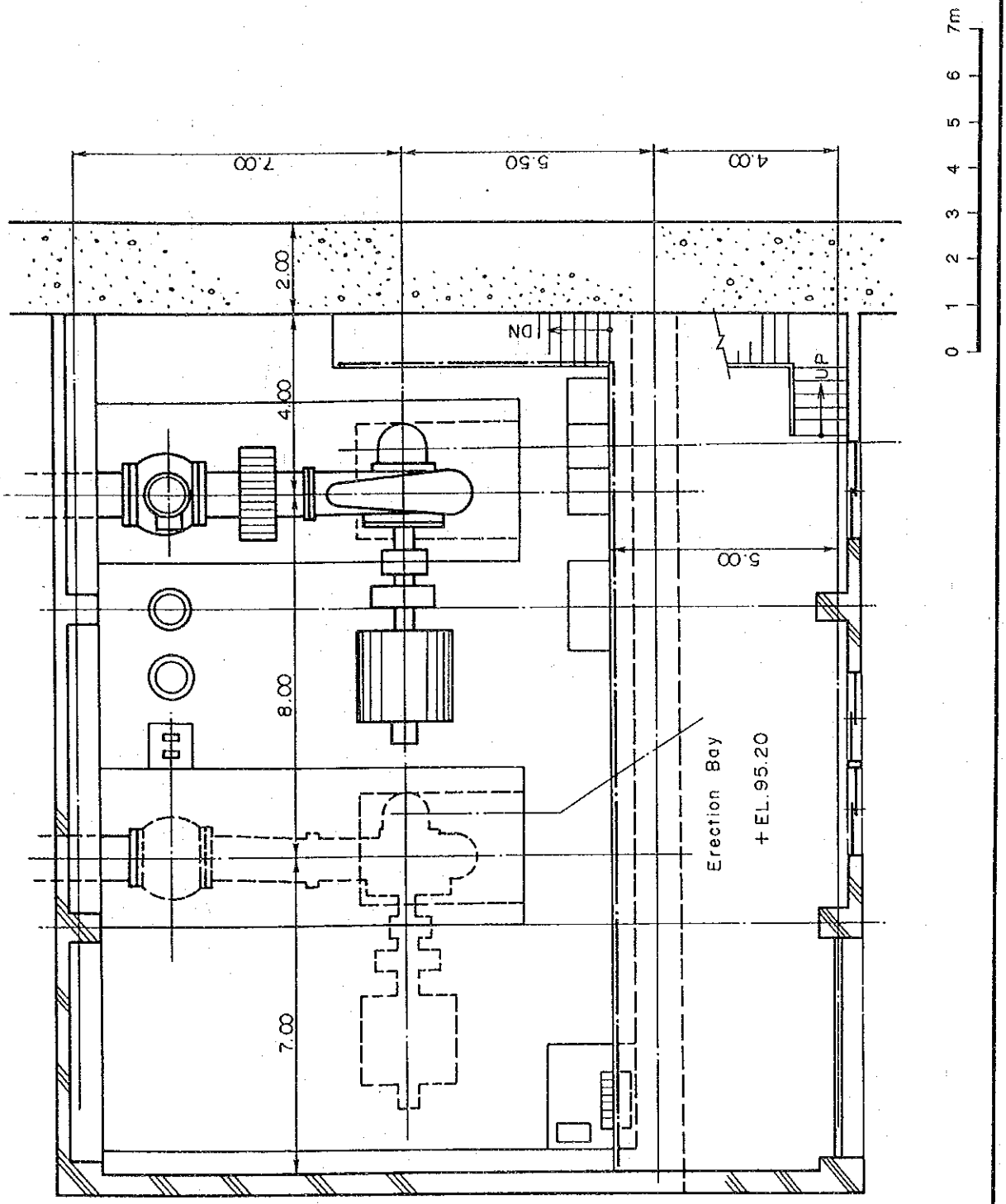

MASTER PLAN ON WATER RESOURCES DEVELOPMENT AND FEASIBILITY STUDY FOR URGENT FLOOD CONTROL AND URBAN DRAINAGE IN SEMARANG CITY AND SUBURBS JAPAN INTERNATIONAL COOPERATION AGENCY	Fig. XIII.4.3 PLAN OF HYDROPOWER STATION

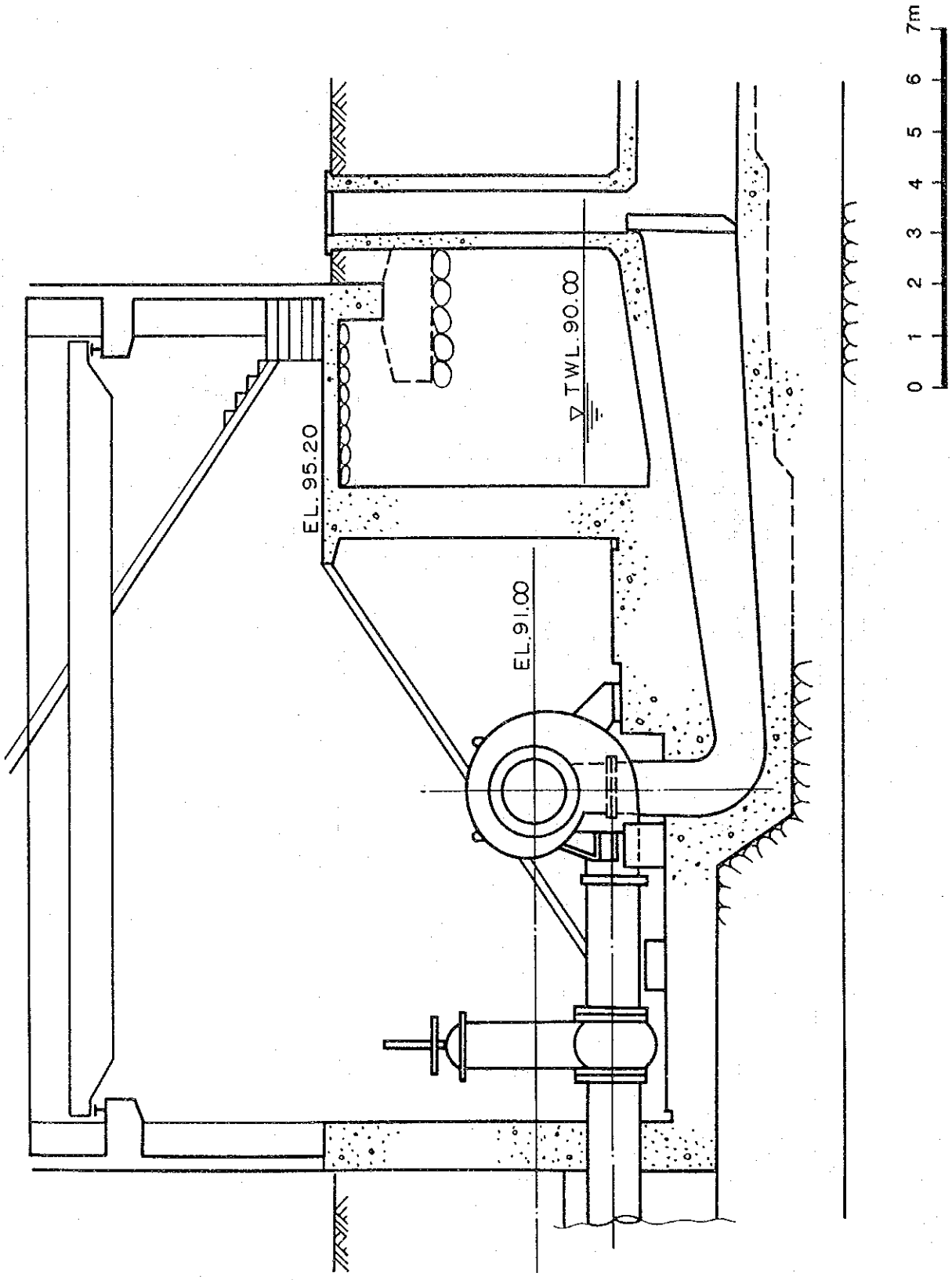

MASTER PLAN ON WATER RESOURCES DEVELOPMENT AND FEASIBILITY STUDY FOR URGENT FLOOD CONTROL AND URBAN DRAINAGE IN SEMARANG CITY AND SUBURBS JAPAN INTERNATIONAL COOPERATION AGENCY	Fig.XIII.4.4 SECTION OF HYDROPOWER STATION

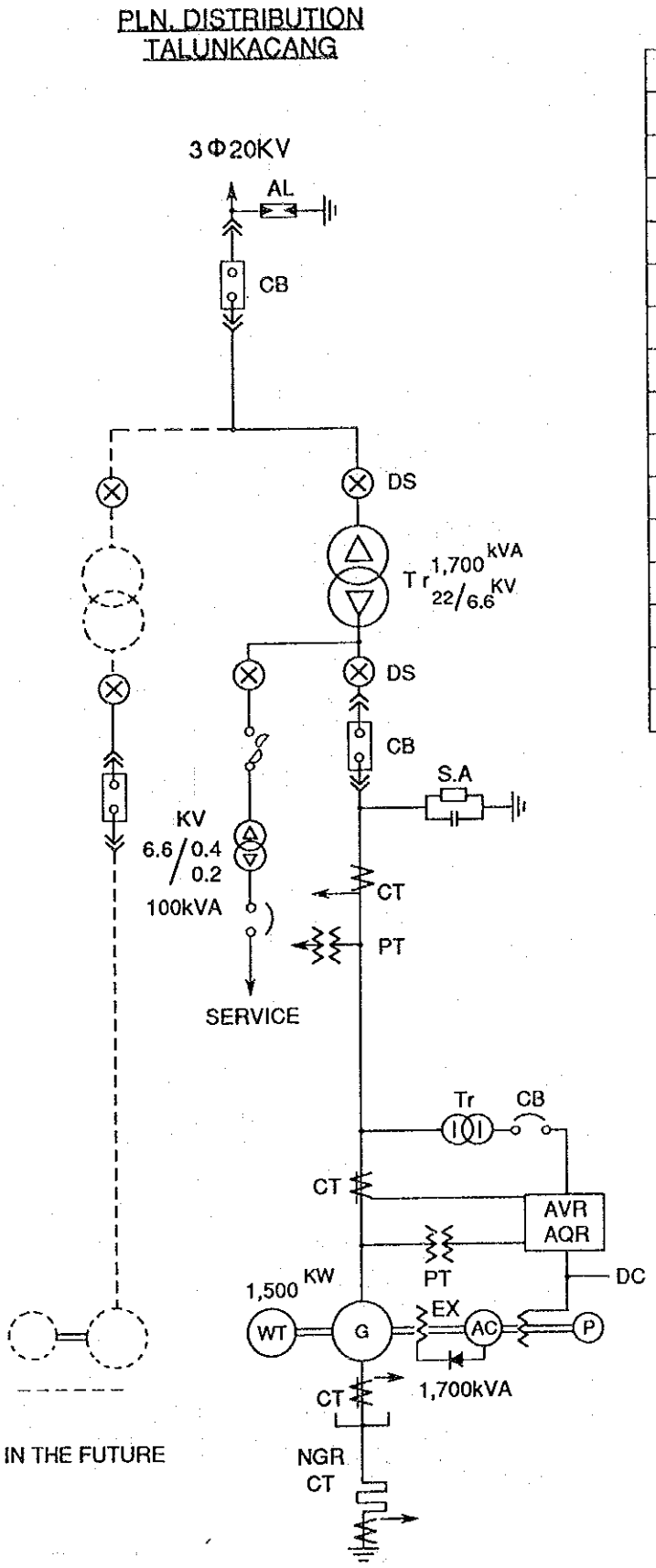

MAIN PART

MARK	Appellation
WT	Water Turbine
G	Generator
Tr	Transformer
CB	Circut Breaker
EX	Exciter
P	Pilot Generator
AC	Alternator Current
DC	Direct Current
CT	Current Transformer
PT	Potential Transformer
AVR	Automatic - Voltage - Reg
AQR	Automatic - Quality - Reg
NGR	Neutral Resistance
SA	Surge Absorber
AL	Surge Arrster

MASTER PLAN ON WATER RESOURCES DEVELOPMENT AND FEASIBILITY STUDY FOR URGENT FLOOD CONTROL AND URBAN DRAINAGE IN SEMARANG CITY AND SUBURBS

JAPAN INTERNATIONAL COOPERATION AGENCY

Fig. XIII.4.5

SINGLE LINE DIAGRAM

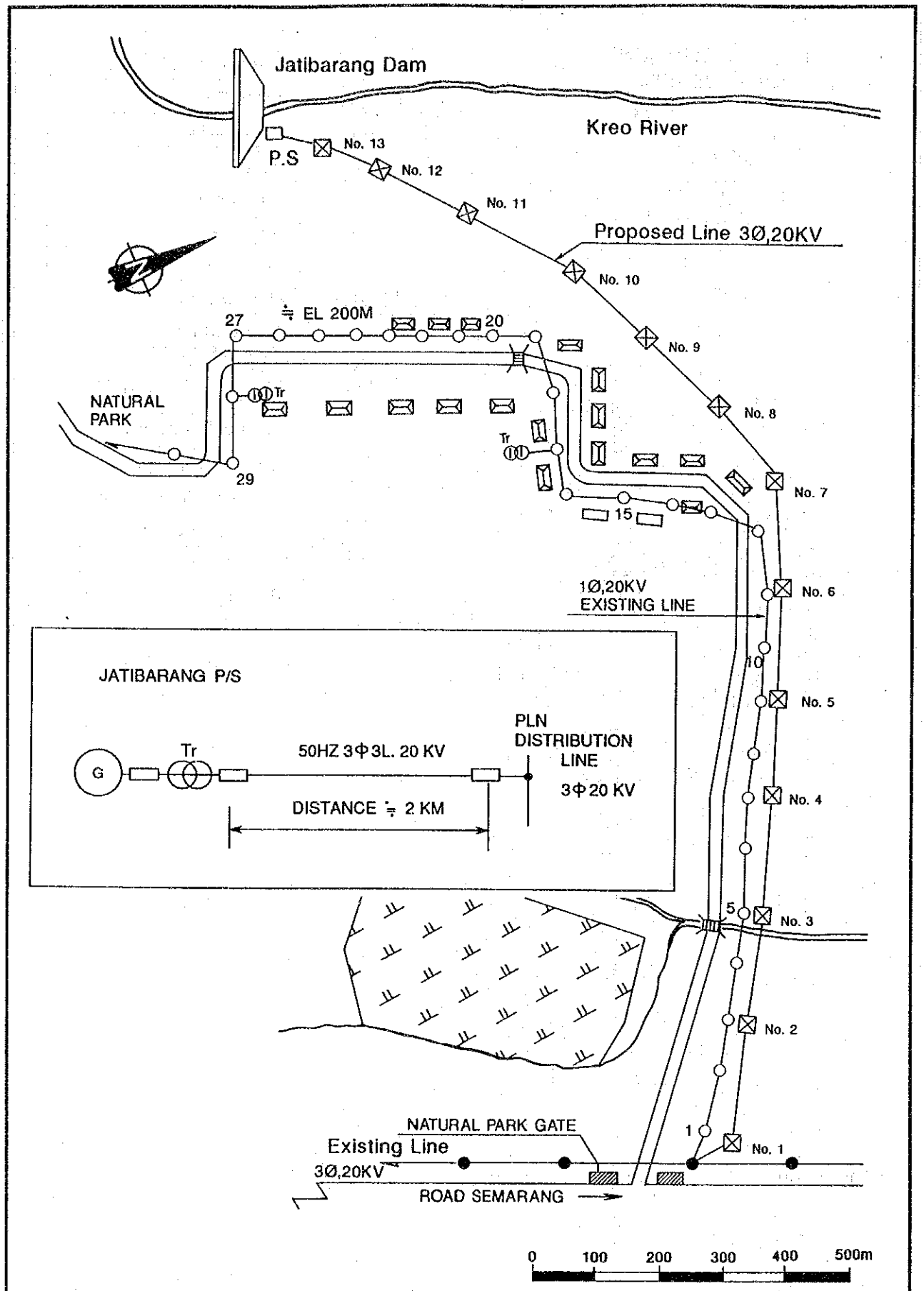

MASTER PLAN ON WATER RESOURCES DEVELOPMENT AND FEASIBILITY STUDY FOR URGENT FLOOD CONTROL AND URBAN DRAINAGE IN SEMARANG CITY AND SUBURBS

JAPAN INTERNATIONAL COOPERATION AGENCY

Fig.XIII.4.6

PLAN OF TRANSMISSION LINE

XIV ECONOMIC EVALUATION

XIV ECONOMIC EVALUATION

TABLE OF CONTENTS

		Page
CHAPTER 1	URGENT PROJECT.....	XIV-1
1.1	Basic Conditions.....	XIV-1
1.2	Annual Average Benefit.....	XIV-1
1.3	Economic Evaluation on Urgent Project.....	XIV-8
1.4	Project Justification.....	XIV-11
CHAPTER 2	MASTER PLAN.....	XIV-12
2.1	Flood Control Plan.....	XIV-12
2.1.1	Basic Conditions.....	XIV-12
2.1.2	Annual Average Benefit.....	XIV-13
2.1.3	Economic Project Cost.....	XIV-18
2.1.4	Economic Evaluation on Flood Control Master Plan....	XIV-19
2.1.5	Project Justification.....	XIV-21
2.2	Urban Drainage Plan.....	XIV-21
2.2.1	Basic Conditions.....	XIV-22
2.2.2	Annual Average Benefit.....	XIV-22
2.2.3	Economic Project Cost.....	XIV-25
2.2.4	Economic Evaluation on Urban Drainage Master Plan...	XIV-25
2.2.5	Project Justification.....	XIV-27
2.3	Water Resources Development Plan....	XIV-27
2.3.1	Basic Conditions.....	XIV-27
2.3.2	Annual Average Benefit.....	XIV-28
2.3.3	Economic Project Cost.....	XIV-31
2.3.4	Economic Evaluation on Water Resources Development Master Plan.....	XIV-32

Page

2.3.5 Project Justification..... XIV-34

2.4 Social Analysis for Flood Control Master Plan..... XIV-34

CHAPTER 3 FEASIBILITY STUDY..... XIV-37

3.1 Flood Control Plan..... XIV-37

3.1.1 Basic Conditions..... XIV-37

3.1.2 Annual Average Benefit..... XIV-38

3.1.3 Economic Project Cost..... XIV-42

3.1.4 Economic Evaluation on Flood Control Project..... XIV-43

3.1.5 Project Justification..... XIV-45

3.2 Urban Drainage Plan..... XIV-46

3.2.1 Basic Conditions..... XIV-47

3.2.2 Economic Benefit..... XIV-48

3.2.3 Economic Project Cost..... XIV-49

3.2.4 Economic Evaluation on Urban Drainage Plan..... XIV-50

3.2.5 Project Justification..... XIV-51

3.3 Water Resources Development Plan.... XIV-51

3.3.1 Economic Benefit..... XIV-52

3.3.2 Economic Project Cost..... XIV-54

3.3.3 Economic Evaluation on Water Resources Development Plan..... XIV-55

3.3.4 Project Justification..... XIV-56

3.4 Hydropower Generation Plan..... XIV-56

3.4.1 Economic Benefit..... XIV-57

3.4.2 Economic Project Cost..... XIV-60

3.4.3 Economic Evaluation on Hydropower Generation Plan... XIV-60

3.4.4 Project Justification..... XIV-61

Page

3.5 Dam Construction Project..... XIV-62

3.5.1 Economic Evaluation on Dam Construction Project..... XIV-62

3.5.2 Project Justification..... XIV-63

3.6 All Projects..... XIV-64

3.6.1 Integrated Economic Evaluation of All Projects... XIV-64

3.6.2 Project Justification..... XIV-65

LIST OF TABLES

Table No.	Title	Page
XIV.1.1	Detailed Mesh Data of the Flood Prone Area in Urgent Project.....	XIV-66
XIV.1.2	Average Damageable Value of Wet Paddy.....	XIV-70
XIV.1.3	Economic Production Cost of Wet Paddy for One Season.....	XIV-71
XIV.1.4	Economic Price of Wet Paddy.....	XIV-71
XIV.1.5	Average Damageable Value of Fishpond.....	XIV-72
XIV.1.6	Damageable Value of Fishpond.....	XIV-77
XIV.1.7	Economic Production Cost of Fishpond.....	XIV-78
XIV.1.8	Economic Price of Prawn.....	XIV-80
XIV.1.9	Damageable Value of Residential Area.....	XIV-80
XIV.1.10	Damageable Value of Buildings.....	XIV-81
XIV.1.11	Summary of Unit Damageable Value of Area.....	XIV-82
XIV.1.12	Damage Rates by Inundation Depth.....	XIV-82
XIV.1.13	Calculated Flood Damage in Urgent Project.....	XIV-83
XIV.1.14	Annual Average Benefit of Urgent Project for West Floodway/Garang River.....	XIV-84
XIV.1.15	Annual Cost and Benefit Flow of Urgent Project for West Floodway/ Garang River.....	XIV-85
XIV.2.1	Residence Distribution.....	XIV-86
XIV.2.2(1/2)	Damageable Value of Residential Area.....	XIV-87
XIV.2.2(2/2)	Damageable Value of Industrial & Business Area.....	XIV-87
XIV.2.3	Calculated Flood Damage.....	XIV-88

Table No.	Title	Page
XIV.2.4	Calculation of Annual Average Benefit.....	XIV-90
XIV.2.5	Annual Cost and Benefit Flow.....	XIV-92
XIV.2.6	Annual Cost and Benefit Flow of Flood Control Master Plan.....	XIV-98
XIV.2.7	Estimated Damage by Drainage Problem.....	XIV-99
XIV.2.8	Annual Average Benefit of Urban Drainage Project.....	XIV-99
XIV.2.9(1/3)	Annual Cost and Benefit Flow of Western Semarang Drainage Area.....	XIV-100
XIV.2.9(2/3)	Annual Cost and Benefit Flow of Central Semarang Drainage Area.....	XIV-101
XIV.2.9(3/3)	Annual Cost and Benefit Flow of Eastern Semarang Drainage Area.....	XIV-102
XIV.2.10	Annual Cost and Benefit Flow of Urban Drainage Master Plan.....	XIV-103
XIV.2.11(1/2)	Calculation of Annual Average Benefit of Irrigation by Kedung Suren Res.....	XIV-104
XIV.2.11(2/2)	Calculation of Annual Average Benefit of Irrigation by Babon Res.....	XIV-104
XIV.2.12	Annual Average Benefit by Irrigation Works.....	XIV-105
XIV.2.13(1/3)	Annual Cost and Benefit Flow of Kedung Suren Reservoir Project....	XIV-106
XIV.2.13(2/3)	Annual Cost and Benefit Flow of Jatibarang Res./Mundingan Res./ Interbasin Trans. Project.....	XIV-107
XIV.2.13(3/3)	Annual Cost and Benefit Flow of Babon Reservoir Project.....	XIV-108
XIV.2.14	Annual Cost and Benefit Flow of Water Resources Development Master Plan.....	XIV-109

Table No.	Title	Page
XIV.2.15	Estimates of Population and Residential Area per Household and House in the Study Area.....	XIV-110
XIV.2.16	Estimates of Working Population and Area per Company for Commerce and Industry in Semarang City.....	XIV-111
XIV.2.17	Inundation Area.....	XIV-112
XIV.2.18	Houses/Buildings in Inundation Area.....	XIV-113
XIV.2.19	Population Suffered from Flood....	XIV-114
XIV.2.20	Reduction of Inundation Area.....	XIV-115
XIV.2.21	Reduction of Houses/Buildings in Inundation Area.....	XIV-116
XIV.2.22	Relieved Population from Flood....	XIV-117
XIV.3.1	Annual Cost and Benefit Flow of West Floodway/Garang River Project....	XIV-118
XIV.3.2	Annual Average Benefit for Combination of Flood Control Dam and River Improvement.....	XIV-119
XIV.3.3	Annual Average Benefit for River Channel Improvement Only.....	XIV-119
XIV.3.4	Annual Average Benefit for Flood Control Dam Only.....	XIV-120
XIV.3.5	Estimation of Probable Flood Damage Value Effected by Flood Control of Jatibarang Dam.....	XIV-120
XIV.3.6	Annual Cost and Benefit Flow of Flood Control Plan of West Floodway/Garang River (Simultaneous Implementation).....	XIV-121
XIV.3.7	Annual Cost and Benefit Flow of Flood Control Plan of West Floodway/Garang River (Alt. 1)....	XIV-122
XIV.3.8	Annual Cost and Benefit Flow of Flood Control Plan of West Floodway/Garang River (Alt. 2)....	XIV-123

Table No.	Title	Page
XIV.3.9	Estimated Damage for Central Semarang Area.....	XIV-124
XIV.3.10	Annual Average Benefit of Urban Drainage Project.....	XIV-124
XIV.3.11	Annual Cost and Benefit Flow of Central Semarang Area Drainage Project.....	XIV-125
XIV.3.12	Annual Cost and Benefit Flow of Water Resources Development Plan.....	XIV-126
XIV.3.13	Annual Cost and Benefit Flow of Hydropower Generation Plan.....	XIV-127
XIV.3.14	Annual Cost and Benefit Flow of Jatibarang Dam Project (Flood Control, Water Resources and Hydropower Plans).....	XIV-128
XIV.3.15	Annual Cost and Benefit Flow of Water Supply and Hydropower Generation Project.....	XIV-129
XIV.3.16	Annual Cost and Benefit Flow of All Projects.....	XIV-130

CHAPTER 1 URGENT PROJECT

1.1 Basic Conditions

The Urgent Project has been formulated to protect the flood-prone area along West Floodway/Garang River from a 25-year return period flood, and its economic viability was assessed from the annual average benefit and economic project cost. The basic conditions for the economic evaluation are given as follows:

(1) Annual average benefit or potential flood damage is to be calculated by the mesh unit (200m x 200m) in accordance with the flood inundation analysis for the area;

(2) Target completion year is fixed at the year 2000, and project life is assumed at 50 years, considering the durable life of facilities to be installed;

(3) Project benefit is estimated on the development stages in 1993 and 2015, on the assumption that project benefit will increase from 1993 to 2015 and it will be constant from 2015 onward; and

(4) Currency conversion rates are assumed at US$1.00 = Rp. 2,033 and ¥1.00 = Rp. 16.20.

1.2 Annual Average Benefit

Flood control benefit is defined as the reduction of potential flood damage attributed to the design works. The reduction is obtained as the difference between the estimated flood damage under the with- and the without-the-project situations.

Methodology and Calculation Conditions

(1) Mesh Data

The flood prone area or the benefit area is limited to the area of about 908 ha, which is divided into 227 meshes. Land use and assets in each mesh are identified for the following items by examining the land use maps and aerophotographs. The detailed mesh data are presented in Table XIV.1.1.

Land Use Classification	Total Size/Length
Wet Paddy	46.613 ha
Dry Crop	0 ha
Fishpond	24.709 ha
Forest	0 ha
Pasture	0 ha
Residential Area	398.548 ha
Industrial Area	20.791 ha
Commercial Area	25.430 ha
Public Area	61.785 ha
Road (Total, 3 types)	99,342 m
Railway	2,200 m

(2) Classification of Flood Damage

Flood damage in general consists of direct damage, indirect damage and intangible damage. Direct damage is defined as the monetary loss, compared with what would be expected without floods, and the monetary expenditure required, or which would be required, to restore the flood damaged asset/property to its pre-flood condition. Indirect damages include the net monetary cost of evacuation, relocation, lost wages, lost production, and lost sales.

Intangible flood damage is defined as flood effects that could not be measured in monetary terms.

In the study area, direct damage affects the agricultural crops of paddy, aquaculture crops of prawn and milkfish, residential houses and non-residential buildings, including industrial buildings and commercial buildings, and public buildings together with their indoor movables, and public facilities such as roads, railways, etc. On the other hand, the damage caused by business suspension due to the flood is estimated as indirect damage.

(3) Direct Damage

Damageable value is the maximum amount of asset value that will suffer the inundation. Generally, direct damage in the area can be calculated as follows:

[Direct Damage in the Area (Rp.)] = [Area Size (ha)] x [Damageable Value (Rp./ha)] x [Damage Rate]

Damageable value for each land classification is presented below.

(a) Agriculture and Aquaculture

The degree of damage on crop varies from month to month, depending on the cropping pattern and the time when flooding occurs. Therefore, the annual average damageable value of crops per hectare should be taken, and this is estimated as the aggregate of expected net income and

accumulated production expenditure until the time when flood takes place, where flood frequency and cultivated area in each month have to be taken into account, as expressed by the following formula:

$$DV = \sum_{i=Jan.}^{Dec.} CA_i \cdot FF_i \cdot (AC_i \cdot Pc_i + NI)$$

where,

DV	:	*Damageable Value (Rp./ha)*
CA	:	*Cultivated Area (%)*
FF	:	*Flood Frequency (%)*
AC	:	*Accumulated Production Cost (%)*
PC	:	*Production Cost (Rp./ha)*
NI	:	*Net Income (Rp./ha)*

The damageable values per hectare are estimated at Rp. 2,124,000 for paddy, and Rp. 13,626,000 for aquacultural crops. Details of calculation are in Tables XIV.1.2, XIV.1.5 and XIV.1.6.

Economic prices of paddy and prawn, calculated as import/export parity prices in Tables XIV.1.3, XIV.1.4, XIV.1.7 and XIV.1.8, are applied for the calculation of net income from paddy and prawn.

(b) House and Building

The value of each house/building category is estimated on the basis of average value per hectare, referring to the data derived from the field survey and the standard construction costs for houses and public buildings. The quality and distribution of residences are estimated with the

statistics (refer to Tables XIV.1.9 and XIV.1.10).

The values of indoor movables or household effects are assumed in proportion to the house/building value. Proportions applied for this estimation are as follows:

Residence	0.600
Industrial Building	0.830
Commercial Building	1.375
Public Building	1.070

These rates are employed on the basis of the field survey and other reports on flood control projects similar to this Study (refer to Table XIV.1.11).

(c) Public Facilities

Damage to public facilities is estimated in proportion to the damage to general assets (houses/buildings and their indoor movables) calculated above, excluding the damage to agricultural crops and aquacultural crops and the damage caused by business suspension. Proportions applied for this estimation are as follows:

Roads and Bridges	28.2%
Railways	13.2%
Telecommunications	3.1%
Electric Power Facilities	2.3%

These rates are employed in accordance with the field survey and other reports on flood control projects similar to this

Study, as well as the "Main Principles on Investigation of River Economy, Ministry of Construction, Japan."

(4) Indirect Damage

Damage caused by business suspension due to the flood is estimated using the rate (6%) to the damage to general assets (houses/buildings and their indoor movables).

This rate is applied in accordance with the field survey and other reports on flood control projects similar to this Study, as well as the "Main Principles on Investigation of River Economy, Ministry of Construction, Japan."

(5) Damage Rate by Inundation Depth

The damage rates for each item vulnerable to flood damage are determined in accordance with the inundation depth, the field survey and other reports on flood control projects similar to this Study, as well as the "Manual for River Works in Japan, Survey, Ministry of Construction, Japan" (refer to Table XIV.1.12). However, the inundation duration does not influence the damage rates because the inundations start almost at the same point of time and cease almost at the same point of time in a day, lasting not more than 12 hours regardless of their return periods.

Inundation depth is calculated by the mesh unit for the floods of 5-, 10-, 25-, 50-, and 100-year return periods (refer to SECTOR I, METEOROLOGY AND HYDROLOGY).

(6) Calculated Flood Damage

Direct flood damage as well as the indirect one is calculated for each mesh in five cases of flooding conditions: 5-, 10-, 25-, 50-, and 100-year return periods. Results are presented in Table XIV.1.13.

Estimation of Annual Average Benefit

Flood control benefit is defined as the expected amount of average annual reduction of damage by the designed works, and it can be calculated in the following procedure:

(1) Assume several levels of flood discharge: 5-, 10-, 25-, 50-, and 100-year return periods in this Study;

(2) Obtain the average annual probability of the discharges between one discharge level and the next (this can be obtained by calculating the excess probability for each discharge level and then, attaining the difference between these probabilities);

(3) Obtain the average annual amount of damage due to floods at this discharge level, multiplying the average annual probability by the amount of estimated damage at this discharge level; and

(4) Obtain a cumulative total of these amounts from the minimum discharge to the maximum discharge.

The method mentioned above can be shown in this formula:

$$B = \sum_{i=1}^{n} 1/2 \cdot [D(Q_{i-1}) + D(Q_i)] \cdot [P(Q_{i-1}) - P(Q_i)]$$

where,

B	:	*annual average benefit*
$D(Q_{i-1})$, $D(Q_i)$	:	*flood damage caused by floods with Q_{i-1} and Q_i, discharges, respectively*
$P(Q_{i-1})$, $P(Q_i)$	:	*probability of occurrence of Q_{i-1} and Q_i discharges, respectively*
n	:	*number of discharge levels*

Estimated under the development conditions in 1993 and 2015, the annual average benefit of the Urgent Project increases from 4,418 to 16,683 million rupiah, as shown in Table XIV.1.14, and will remain constant after 2015 on the assumption that development of the beneficial area will not change.

1.3 Economic Evaluation on Urgent Project

The Urgent Project is evaluated from the economic viewpoint by the calculation of the economic validity in terms of Economic Internal Rate of Return (EIRR), Benefit-Cost Ratio (B/C) and Net Present Value (NPV), with comparison between the economic project cost and the annual average benefit that may accrue in accordance with the expected cost-benefit flow in the project life.

(1) Economic Project Cost

Economic costs of the project are nominal figures that duly reflect the true economic value of goods and services involved. These costs are used only for the economic evaluation of the Project.

Transfer items such as taxes imposed on construction materials and equipment and contractor profit are excluded from the elements of financial cost. Economic wage of unskilled laborers employed for construction works of the Project is assumed to be 80% of the actual market wage, taking account of the employment opportunity of laborers in Indonesia. The economic project cost is thus estimated at 57,952 million rupiah (refer to SECTOR XII, PROJECT COST ESTIMATE).

The estimated administration and engineering service costs are applied as the economic cost. Price contingency is not considered in the economic cost, while physical contingency is included.

(2) Annual Cost-Benefit Flow

To calculate the EIRR, B/C and NPV of the Urgent Project, the annual cost-benefit flow is estimated based on the implementation schedule, as shown in Table XIV.1.15.

The benefit is assumed to accrue during the construction period because some of the completed works may bring about flood control effect to a certain degree, and to increase gradually until the year 2015 and keep the same

level until the end of project life. The estimated operation, maintenance and replacement (OMR) cost is needed annually after project completion to keep duly the designed function.

(3) Economic Viability of Urgent Project

The economic viability of the Urgent Project is assessed by means of EIRR, B/C and NPV as mentioned above, which are calculated on the annual cost-benefit flow. A discount rate of 10% is applied for the calculation of B/C and NPV. The economic viability is figured out as follows:

EIRR : 15.9%
B/C : 1.79
NPV : Rp. 31,152 million

(4) Sensitivity Analysis

Sensitivity analysis of the above-mentioned economic viability is carried out on several cases of changes in the project benefit or economic project cost as summarized in the following table.

	Case	EIRR (%)	B/C	NVP (mil.Rp.)
(a)	Project Benefit, 5% down	15.2	1.70	27,422
(b)	Project Benefit, 10% down	14.6	1.60	23,714
(c)	Project Cost, 5% up	15.3	1.71	29,191
(d)	Project Cost, 10% up	14.8	1.63	27,230

1.4 Project Justification

The EIRR of the Urgent Project shows 12.2%, and in any case of the sensitivity analysis, it is over 10% as presented above. The Urgent Project is, therefore, evaluated to have adequate economic viability.

Furthermore, consideration should be given to intangible benefits brought about by the project such as saving of invaluable human lives that may possibly be lost by flooding, protection from possible injuries, and prevention of disease occurrence.

CHAPTER 2 MASTER PLAN

2.1 Flood Control Plan

The economic evaluation on the Flood Control Plan is conducted for the following projects under the respective design scales:

	Project	Design Scale (Year Return Period)
(a)	Blorong River	20
(b)	Bringin River	50
(c)	Silandak River	100
(d)	West Floodway/ Garang River	100
(e)	East Floodway	100
(f)	Babon River	50

2.1.1 Basic Conditions

The Flood Control Plan is formulated to protect the flood prone areas from a 20, 50 or 100-year return period flood at the maximum, and its economic viability is assessed on the basis of annual average benefit and economic project cost. The basic conditions for the economic evaluation are given as follows:

(1) Annual average benefit or potential flood damage is calculated by the mesh unit (200m x 200m) in accordance with the flood inundation analysis for the project areas presented in SECTOR I, METEOROLOGY AND HYDROLOGY;

(2) Final completion year is fixed at the year 2015, and project life is assumed at 50 years,

considering the durable life of facilities to be installed and other similar projects in Indonesia;

(3) Project benefit is estimated on the projected development stage in 2015 in accordance with the final completion year; and

(4) Currency conversion rates are assumed at US$1.00 = Rp. 2,033 and ¥1.00 = Rp. 16.20.

2.1.2 Annual Average Benefit

Flood control benefit is defined as the reduction of potential flood damage attributed to the designed works. The reduction is obtained as the difference between the estimated flood damage under the with- and the without-the-project situations.

Methodology and Calculation Conditions

(1) Mesh Data

From the economic viewpoint, inundation and assets are examined in the following project areas, which are divided into hundreds of meshes.

	Project	Meshes (Nos.)
(a)	Blorong River	1,016
(b)	Bringin River	243
(c)	Silandak River	72
(d)	West Floodway/ Garang River	227
(e)	East Floodway	1,080
(f)	Babon River	850

Land use in each mesh of the project area is identified as "Business Area," "Residential Area," "Industrial, Harbor and Airport Area," or "Green Zone & Others" in accordance with the "Future Land Use in Semarang City in the Year 2015" as shown in SECTOR III, SOCIOECONOMY AND LAND USE and other field survey results. Since the Blorong River Area is not included in the land use figure, the future land use is estimated by statistical data and present land use maps.

(2) Classification of Flood Damage

Flood damage in general consists of direct damage, indirect damage and intangible damage. These classifications are basically the same as the Urgent Project Study.

(3) Direct Damage

Damageable value is the maximum amount of asset value that will suffer the inundation. Generally, direct damage in the area can be calculated as follows:

[Direct Damage in the Area (Rp.)] = [Area Size (ha)] x [Damageable Value (Rp./ha)] x [Damage Rate]

Damageable value for each land classification is presented below.

(a) Green Zone & Others

This kind of land can be considered as wet paddy or fishpond in the rural areas,

where agriculture and aquaculture will be the main business in the future. The same formula used in the Urgent Project Study is applied in the calculation of the damageable value of this kind of land.

The damageable values per ha have been estimated at Rp. 2,124,000 for wet paddy and Rp. 13,626,000 for aquacultural crops.

The same economic prices of wet paddy and prawn used in the Urgent Project Study are applied for the calculation of net income from wet paddy and prawn.

(b) Residential, Industrial and Commercial Areas

The assets of these areas are divided into buildings and their indoor movables.

The value of each building category is estimated on the basis of average value per ha, referring to the data derived from the field survey and the standard construction costs for the respective kinds of buildings. The quality and distribution of residences have been estimated with the statistical data. This value is employed as the basic value of buildings with adjustment by the building density in each project area (refer to Tables XIV.2.1 and XIV.2.2).

The values of indoor movables or household effects are assumed in proportion to the house/building value. Proportions applied for this estimation are as follows:

Residence	0.600
Industrial Building	0.830
Commercial Building	1.375

These rates are the same as those used in the Urgent Project Study.

(c) Public Facilities

Damage to public facilities is estimated in proportion to the damage to general assets (houses/buildings and their indoor movables) calculated above, excluding the damage to agricultural crops and aquacultural crops and damages caused by business suspension. Proportions applied for this estimation are as follows:

Roads and Bridges	28.2%
Farm Land	5.6%
Agricultural Facilities	43.4%
Railways	13.2%
Telecommunications	3.1%
Electric Power Facilities	2.3%

These rates are adjusted on the basis of the field survey and other reports on flood control projects similar to this Study, as well as the "Main Principles on Investigation of River Economy, Ministry of Construction, Japan."

(4) Indirect Damage

Damage caused by business suspension due to the flood is estimated using the rate (6%) to the

damage to general assets (houses/buildings and their indoor movables).

This rate is applied on the basis of the field survey and other reports on flood control projects similar to this Study, as well as the "Main Principles on Investigation of River Economy, Ministry of Construction, Japan."

(5) Damage Rate by Inundation Depth

The same damage rates used in the Urgent Project are applied in this section.

Inundation depth is calculated on the mesh unit basis for the floods of 5-, 10-, 25- (or 20-), 50-, and 100-year return periods.

(6) Calculated Flood Damage

Direct flood damage as well as indirect one is calculated for each mesh in five cases of flooding conditions: 5-, 10-, 25- (or 20-), 50-, and 100-year return periods. Results are presented in Table XIV.2.3.

Estimation of Annual Average Benefit

The annual average benefit of the project is estimated basically by the same method as the Urgent Project Study. The annual average benefits are given in the following table. Details of the calculation are presented in Table XIV.2.4.

	Project	Annual Average Benefit (mil.Rp.)
(a)	Blorong River	14,312
(b)	Bringin River	1,768
(c)	Silandak River	1,628
(d)	West Floodway/ Garang River	27,264
(e)	East Floodway	5,239
(f)	Babon River	17,453

2.1.3 Economic Project Cost

The economic costs of the projects are nominal figures that duly reflect the true economic value of goods and services involved. These costs are used only for the economic evaluation of the Project.

Transfer items such as taxes and duties imposed on construction materials and equipment, including government subsidy and contractor profit, are excluded from the elements of the financial cost. It is assumed that about 20% of the financial construction cost is involved as the transfer items.

The estimated administration and engineering service costs are applied as the economic cost. Economic price of land to be acquired for the project implementation is considered to correspond to the productivity foregone by the project, which is reflected by the estimated compensation cost. Price contingency is not considered in the economic cost while physical contingency is included (refer to SECTOR XII, PROJECT COST ESTIMATE). The economic project cost is thus estimated as follows:

	Project	Economic Project Cost (mil.Rp.)
(a)	Blorong River	86,143
(b)	Bringin River	23,791
(c)	Silandak River	10,372
(d)	West Floodway/ Garang River	78,384
(e)	East Floodway	28,107
(f)	Babon River	87,152

2.1.4 Economic Evaluation on Flood Control Master Plan

The flood control projects are evaluated and the priority project is confirmed from the economic viewpoint by the calculation of the economic validity in terms of Economic Internal Rate of Return (EIRR), with comparison between the economic project cost and the annual average benefit that may accrue in accordance with the expected cost-benefit flow in the project life.

(1) Annual Cost-Benefit Flow

To calculate EIRR, B/C and NPV of the Flood Control Plan, the annual cost-benefit flow is estimated based on the implementation schedule, as shown in Table XIV.2.5.

The benefit is assumed to accrue during the construction period because some of the completed works may bring about flood control effect to a certain degree, and to increase gradually until the completion year and keep the same level until the end of project life. The estimated operation, maintenance and replacement (OMR) cost is needed annually after

project completion to keep duly the designed function.

The benefit before 2015, the completion year, is reduced annually by 6%, which is the target growth rate of Central Jawa in Pelita V.

(2) Evaluation on Flood Control Master Plan

The EIRR's for the respective flood control projects are calculated on the annual cost-benefit flow. A discount rate of 10% is applied for the calculation of B/C. The economic viability is figured out as follows (refer to Table XIV.2.5):

	Project	EIRR (%)	B/C	NPV (mil.Rp.)
(a)	Blorong River	10.5	1.07	2,351
(b)	Bringin River	6.1	0.64	-1,337
(c)	Silandak River	12.8	1.28	485
(d)	West Floodway/ Garang River	16.8	2.02	54,950
(e)	East Floodway	14.9	1.54	2,501
(f)	Babon River	13.8	1.51	18,547

Each flood control project is organized in the Flood Control Master Plan, based on engineering consideration and the economic validity estimated for each flood control project. Finally, this Master Plan is evaluated as the total project including such organized flood control projects.

The Master Plan shows 14.1% of EIRR as the total flood control plan (refer to Table XIV.2.6). The Master Plan is, therefore, evaluated to have adequate economic viability.

Furthermore, consideration should be given to intangible benefits brought about by the project such as saving of invaluable human lives that may possibly be lost by flooding, protection from possible injuries, and prevention of disease occurrence.

(3) Sensitivity Analysis

Sensitivity analysis is carried out for the West Floodway/Garang River Project which shows the highest figure in EIRR on several cases of changes in the project benefit or economic project cost. (A discount rate of 10% is applied for the calculation of B/C and NPV.)

	Case	EIRR (%)	B/C	NPV (mil.Rp.)
(a)	Benefit 5% down	15.4	1.84	45,230
(b)	Benefit 10% down	14.9	1.75	40,027
(c)	Cost 5% up	15.4	1.85	47,751
(d)	Cost 10% up	15.0	1.76	45,070

2.1.5 Project Justification

The EIRR of the West Floodway/Garang River Project shows 16.8%, and in any case of the sensitivity analysis, it is around 15% as presented above. The Project is, therefore, evaluated to have adequate economic viability.

2.2 Urban Drainage Plan

The evaluation is limited to those on (a) Western Semarang Area, (b) Central Semarang, and (c) Eastern Semarang Area.

2.2.1 Basic Conditions

The basic conditions for the economic evaluation are given as follows:

(1) Annual average benefit or potential flood damage is calculated by the mesh unit (500m x 500m) in accordance with the interview survey;

(2) The target completion year is fixed at the year 2015, and project life is assumed to be 50 years, considering the durable life of facilities to be installed and other similar projects in Indonesia;

(3) Project benefit is estimated on the projected development stage in 2015 in accordance with the target completion year; and

(4) Currency conversion rates are assumed at US$1.00 = Rp. 2,033 and ¥1.00 = Rp. 16.20.

2.2.2 Annual Average Benefit

Project benefit is defined as the reduction of inundation damage attributed to the designed works. The reduction is obtained as the difference between the estimated inundation damage under the with- and the without-the-project situations.

Methodology and Calculation Conditions

(1) Mesh Data

From the economic viewpoint, inundation and assets were examined in the following project areas, which were divided into hundreds of meshes with respective design scales of the drainage plan.

	Project	Design Scale (yr)	Mesh (No.)
(a)	Western Semarang	5	44
(b)	Central Semarang	5	26
		10	91
(c)	Eastern Semarang	10	211

Land use in each mesh of the project area is identified as "Business Area," "Residential Area," "Industrial, Harbor and Airport Area," or "Green Zone & Others" in accordance with the "Future Land Use in Semarang City in the Year 2015" as shown in SECTOR III, SOCIOECONOMY AND LAND USE.

(2) Damage

Although the drainage problem causes a wide variety of indirect damage including sanitary deterioration and traffic jam, the estimation of damage is limited to the direct one because reliable data is not available for the indirect damage and it is extremely difficult to figure out the extent to which the people suffer from the damage.

The principles and data used in the classification and calculation of the flood

damage potential are also used in this section. However, the inundation model is not used for the calculation of inundation depth because it is not appropriate for the analysis of the drainage problem. Therefore, an interview survey was carried out for the estimation of the annual average damage caused by the drainage problem.

In the interview survey, habitual inundation data including annual average inundation depth, times per year, and duration were collected at intersection points of vertical and horizontal lines of 500 m interval in the focused area. Finally, these data were cross-checked with the topographic data and field surveys.

Estimation of Annual Average Benefit

Damage rates employed in the Flood Control Plan were examined and corrected for the estimation of the relation between inundation depth and its damage. It was assumed that the annual average damage increases due to the average inundation frequency. Then, annual average benefit was calculated as given in the following table. Details are shown in Tables XIV.2.7 and XIV.2.8.

	Project	Design Scale (Year Return Period)	Annual Average Benefit (mil.Rp.)
(a)	Western Semarang	5	2,255
(b)	Central Semarang	5	2,392
		10	14,248
(c)	Eastern Semarang	10	17,847

2.2.3 Economic Project Cost

The principles used in the calculation of economic project cost for the Flood Control Plan are also used for this Urban Drainage Plan (refer to SECTOR XII, PROJECT COST ESTIMATE). The economic project cost is thus estimated as follows:

	Project	Economic Project Cost (mil.Rp.)
(a)	Western Semarang	19,433
(b)	Central Semarang	89,795
(c)	Eastern Semarang	173,814

2.2.4 Economic Evaluation on Urban Drainage Master Plan

The Urban Drainage Plan is evaluated and its priority project is selected from the economic viewpoint by figuring out the economic validity in terms of Economic Internal Rate of Return (EIRR), with comparison between the economic project cost and the annual average benefit that may accrue in accordance with the expected cost-benefit flow in the project life.

(1) Annual Cost-Benefit Flow

To calculate EIRR and B/C of the plan, the annual cost-benefit flow is estimated based on the implementation schedule, as shown in Table XIV.2.9.

The benefit is assumed to accrue at the same level until the end of project life. The estimated operation, maintenance and replacement (OMR) cost is needed annually after project completion to keep duly the designed function.

(2) Evaluation on Urban Drainage Master Plan

The EIRR's as well as B/C's for the respective urban drainage projects were calculated on the annual cost-benefit flow. A discount rate of 10% was applied for the calculation of B/C. The economic viability was figured out, as follows:

Project	EIRR (%)	B/C	NPV (mil.Rp.)
Western Semarang	10.8	1.08	223
Central Semarang	15.1	1.57	10,179
Eastern Semarang	9.5	0.95	-4,797

Each urban drainage project is organized in the urban drainage Master Plan, based on engineering consideration and the economic validity estimated for each urban drainage project. Finally, this Master Plan is evaluated as the total project including such organized urban drainage projects.

The Master Plan shows 10.4% of EIRR as the total Urban Drainage Plan (refer to Table XIV.2.10). The EIRR was calculated taking actual implementation of the improvement works into account. If consideration is given to the exclusion of indirect and intangible benefits in this calculation [refer to (b) Damage in Section 3.2], this EIRR close to 10% is relatively high, compared to other similar projects.

(3) Sensitivity Analysis

Sensitivity analysis is carried out for the Central Semarang Project which shows the highest figure in EIRR on several cases of changes in the project benefit or economic project cost. (A discount rate of 10% is applied for the calculation of B/C and NPV.)

	Case	EIRR (%)	B/C	NPV (mil.Rp.)
(a)	Benefit 5% down	14.7	1.51	7,248
(b)	Benefit 10% down	14.0	1.43	6,115
(c)	Cost 5% up	14.8	1.51	7,667
(d)	Cost 10% up	14.2	1.44	6,953

2.2.5 Project Justification

The EIRR of Central Semarang Project shows 15.1%, and in any case of the sensitivity analysis, it is around 14% as presented above. The Project is, therefore, evaluated to have adequate economic viability.

2.3 Water Resources Development Plan

The Water Resources Development Plan aims to match the demand in 2015 for (1) Public Water, (2) Irrigation Water, and (3) River Maintenance Flow. The benefit of the plan is examined for each of them.

2.3.1 Basic Conditions

Basic conditions for economic evaluation are given as follows:

(1) The target completion year is fixed at the year 2015, and project life is assumed to be 50 years, considering the durable life of facilities to be installed and other similar projects in Indonesia;

(2) Project benefit is estimated on the projected development stage in 2015 in accordance with the target completion year; and

(3) Currency conversion rates are assumed at US$1.00 = Rp. 2,033 and ¥1.00 = Rp. 16.20.

2.3.2 Annual Average Benefit

Public Water

Since this water supply plan does not contain construction of treatment plants and distribution system, the benefit is considered as the incremental water supply at the water sources. According to the financial analysis on water production by PDAM in Semarang City, the economic price of raw water is estimated at Rp. 300 per cubic meter. The proposed water sources and their supply volumes are as follows:

	Water Source	Supply (m3/s)	Starting Year
(a)	Kedung Suren Reservoir	1.70	2007
(b)	Jatibarang Reservoir	0.92	2000
	Mundingan Reservoir	1.10	2002
	Interbasin Transfer	0.60	2005
(c)	Babon Reservoir	1.30	2012

Irrigation Water

Irrigation water will be supplied to the Babon River Irrigation Area by Babon Reservoir and to the Blorong River Irrigation Area by Kedung Suren Reservoir. The projected irrigation areas and the water demand in 2015 are as follows:

	Water Source	Irrigation Area (ha)	Water Demand (1,000 m3/yr)
(a)	Kedung Suren Reservoir	3,336	87,300
(b)	Jatibarang Reservoir	-	-
	Mundingan Reservoir	-	-
	Interbasin Transfer	-	-
(c)	Babon Reservoir	126	3,100

The plan is designed to balance the annual average shortage of irrigation water in 2015. The areas to be irrigated are already equipped with technical irrigation channels. Thus, it can be assumed that reduction of water shortage directly leads to an increase of cultivation area in proportion to the average water demand per unit of land, which in turn leads to an increase of rice production. As a result, the benefit is calculated as an increment of net production value of rice.

The average annual shortage reduction is calculated in the same manner as the average annual amount of flood damage reduction. The probability of water shortage is used in the Irrigation Plan, while the probability flood discharge is used in the Flood Control Plan. Then, the average annual shortage reduction is calculated as the expected value of the shortage reduction. The annual average shortage and

production increment of rice are calculated as follows (refer to Tables XIV.2.11 and XIV.2.12):

	Water Source	Annual Water Shortage (1,000 m3/yr)	Rice Production Increment (ton/yr)
(a)	Kedung Suren Res.	2,443.62	1,400.67
(b)	Jatibarang Reservoir	-	-
	Mundingan Reservoir	-	-
	Interbasin Transfer	-	-
(c)	Babon Reservoir	1.17	0.71

The net production value of rice per ton is estimated at Rp. 181,000 [= 1,357,500 (Rp./ha) / 7.5 (ton/ha)], the economic value used in the Urgent Project Study and the Flood Control Master Plan. This figure can also be applied in this section (refer to Table XIV.1.2).

Maintenance Flow

The low flow of the rivers is maintained mainly to preserve or improve present environmental conditions in and around the rivers. Although no one can deny that this flow yields a certain amount of benefit to the residents, it is extremely difficult to figure out exactly what the benefit is, and to estimate the extent to which the people receives the benefit. However, in order to calculate the value of water production, the value of maintenance flow is estimated at Rp. 300 per cubic meter as the value of abandonment of public water supply because this amount of water would be otherwise used for public water. Particular attention should be paid to the benefit which cannot be evaluated numerically.

	Water Source	Supply (m3/s)	Starting Year
(a)	Kedung Suren Reservoir	0.60	2007
(b)	Jatibarang Reservoir	0.50	2000
	Mundingan Reservoir	0.50	2002
	Interbasin Transfer	-	-
(c)	Babon Reservoir	0.50	2012

Total Average Annual Benefit

Totals of average annual benefit of each water resource are given as follows:

	Water Source	Ave. Annual Benefit (Unit: Mil.Rp.)
(a)	Kedung Suren Reservoir	22,013
(b)	Jatibarang Reservoir	34,248
	Mundingan Reservoir	
	Interbasin Transfer	
(c)	Babon Reservoir	17,030

2.3.3 Economic Project Cost

The principles used in the calculation of economic project cost for the Flood Control Plan are used also for this Water Resources Development Plan (refer to SECTOR XII, PROJECT COST ESTIMATE). The economic project cost is thus estimated as follows:

Project		Economic Project Cost (mil.Rp.)
(a)	Kedung Suren Reservoir	168,731
(b)	Jatibarang Reservoir	37,008
	Mundingan Reservoir	106,296
	Interbasin Transfer	7,157
(c)	Babon Reservoir	267,154

2.3.4 Economic Evaluation on Water Resources Development Master Plan

The Water Resources Development Plan is evaluated and its priority project is selected from the economic viewpoint by figuring out the economic validity in terms of Economic Internal Rate of Return (EIRR), with comparison between the economic project cost and the annual average benefit that may accrue in accordance with the expected cost-benefit flow in the project life.

(1) Annual Cost-Benefit Flow

To calculate EIRR and B/C of the plan, the annual cost-benefit flow is estimated based on the implementation schedule, as shown in Table XIV.2.13.

The benefit is assumed to accrue at the same level until the end of project life. The estimated operation, maintenance and replacement (OMR) cost is needed annually after project completion to keep duly the designed function.

(2) Evaluation on Water Resources Development Plan

The EIRR as well as B/C and NPV for the respective water resources development projects is calculated on the annual cost-benefit flow. A discount rate of 10% is applied for the calculation of B/C. The economic viability is figured out as follows:

	Project	EIRR (%)	B/C	NPV (mil.Rp.)
(a)	Kedung Suren Reservoir	9.5	0.93	-4,545
(b)	Jatibarang Reservoir Mundingan Reservoir Interbasin Transfer	16.1	1.79	72,955
(c)	Babon Reservoir	4.9	0.46	-35,410

Each project is organized in the Water Resources Development Master Plan, based on engineering consideration and the economic validity estimated for each project. Finally, this Master Plan is evaluated as the total project including such organized water resources development projects.

The Master Plan shows 11.4% of EIRR as the total Water Resources Development Plan (refer to Table XIV.2.14). If consideration is given to the exclusion of indirect and intangible benefits such as the preservation or improvement of the environment that may possibly be lost without the project in this calculation, this EIRR over 10% is not necessarily low, compared to other similar projects.

(3) Sensitivity Analysis

Sensitivity analysis is carried out for the Jatibarang Reservoir/ Mundingan Reservoir/ Interbasin Transfer Project which shows the highest figure in EIRR on several cases of changes in the project benefit or economic project cost. The Jatibarang Reservoir/ Mundingan Reservoir/ Interbasin Transfer Project shows the highest EIRR of 16.1%, and in any case of the sensitivity analysis, its EIRR is over 14% as presented below. (A discount rate of 10% is applied for the calculation of B/C.)

Case	EIRR (%)	B/C
Benefit 5% down	15.4	1.70
Benefit 10% down	14.8	1.61
Cost 5% up	15.5	1.71
Cost 10% up	14.9	1.63

2.3.5 Project Justification

The EIRR of Jatibarang Reservoir/Mundingan Reservoir/Interbasin Transfer Project shows 16.1%, and in any case of the sensitivity analysis, it is over 14% as presented above. The Project is, therefore, evaluated to have adequate economic viability.

2.4 Social Analysis for Flood Control Master Plan

Social analysis is carried out with regard to reduction of inundation area, reduction of the number

of houses/buildings in the inundation area and reduction of the number of population to be relieved from flood which are estimated by comparing the with- and the without-the-project conditions. Methodology of estimation is the same as in the economic annual average benefit. The analysis will contribute to shape up roles of social analysis, especially (a) specification of local inhabitants, (b) impartiality of benefit, and (c) social evaluation.

Inundation area is calculated on the basis of mesh data for each project. The number of houses/buildings is estimated by taking into consideration the inundation area and area per house/building, and the number of population to be relieved from flood is obtained by multiplying the number of houses/buildings by population per house/building (refer to Tables XIV.2.15 and XIV.2.16).

The annual average reduction of inundation area, number of houses/buildings and population to be relieved from flood are given below.

Project	Inundation Area (ha)	No. of Houses/ Buildings	Population to be Relieved
Blorong River	1,456	362	1,710
Bringin River	165	3	157
Silandak River	36	67	373
West Floodway/Garang River	39	517	3,904
East Floodway	159	76	1,212
Babon River	613	267	2,657

Annual average reduction of inundation area for Blorong River is the largest at 1,456 ha, and Babon River shows the second largest area at 613 ha. On

the contrary, with regard to annual average reduction of the number of houses/buildings in the inundation area, the reduction for West Floodway/Garang River is the biggest at 517 units. Blorong River and Babon River follow at 362 and 267 units, respectively.

Reduction of inundated area and reduction of the number of houses/buildings are not always proportional to each other due to the difference in land use. For example, Blorong and Babon rivers have vast areas of wet paddy and/or fishponds in the inundated area where houses/buildings are not built.

As in the reduction of the number of population, West Floodway/Garang River shows the largest figure at 3,904 persons for annual average reduction of the number of population to be relieved from flood. The reductions for Babon River, Blorong River and East Floodway are 2,657, 1,710 and 1,212 persons, respectively.

Details of the estimate are shown in Tables XIV.2.17 to XIV.2.22.

CHAPTER 3 FEASIBILITY STUDY

3.1 Flood Control Plan

The economic evaluation for the Flood Control Plan is conducted for West Floodway/Garang River on the design scale of 100-year of return period. The flood control project on West Floodway/Garang River has been recommended as the priority project in the Master Plan.

3.1.1 Basic Conditions

The flood control project is formulated to protect the flood-prone areas from a 100-year return period flood, and its economic viability is assessed on the basis of annual average benefit and economic project cost. Basic conditions for economic evaluation are basically the same as those of the Urgent Project and the Master Plan, and are summarized as follows:

(1) Annual average benefit or potential flood damage is calculated by the mesh unit (200 m x 200 m) in accordance with the flood inundation analysis carried out in SECTOR I, METEOROLOGY AND HYDROLOGY;

(2) The final completion year is fixed at the year 2005, and the project life is assumed to be 50 years, considering the durable life of facilities to be installed and other similar projects in Indonesia;

(3) Project benefit is estimated on the development stages in 1993 and 2015, assuming that project

benefit will increase yearly from 1993 to 2015 and it will be constant from 2015 onward; and

(4) Currency conversion rates are assumed at US$1.00 = Rp. 2,033 and ¥1.00 = Rp. 16.20.

3.1.2 Annual Average Benefit

Flood control benefit is defined as the reduction of potential flood damage attributed to the design works. The reduction is obtained as the difference between the estimated flood damage under the with- and the without-the-project situations.

Methodology and Calculation Conditions

(1) Mesh Data

From the economic viewpoint, inundation and assets are examined in West Floodway/Garang River project area, which is divided into 227 meshes. The identification of land use in each mesh of the project area in the years 1993 and 2015 is the same as that made for the Urgent Project and the Master Plan.

(2) Classification of Flood Damage

Flood damage in general consists of direct damage, indirect damage and intangible damage. These classifications are basically the same as those of the Urgent Project Study and the Master Plan.

(3) Direct Damage

Damageable value is the maximum amount of asset value that will suffer the inundation. Generally, direct damage in the area can be calculated as follows:

Direct Damage in the Area (Rp.)] = [Area Size (ha)] x [Damageable Value (Rp./ha)] x [Damage Rate]

Damageable value for each land classification is presented below.

(a) Residential, Industrial and Business Areas

The assets of these areas are divided into building and their indoor movables.

The value of each building category is estimated on the basis of average value per ha, referring to the data derived from the field survey carried out in the Master Plan Study and the standard construction costs for the respective kinds of buildings. The quality and distribution of residences have been estimated with the statistical data. This value is employed as the basic value of buildings with adjustment by the building density in the project area (refer to Tables XIV.2.1 and XIV.2.2).

The values of indoor movables or household effects are assumed in proportion to the house/building value. Proportions applied for this estimation are as follows:

Residence	0.600
Industrial Building	0.830
Business Building	1.375

These rates are the same as those used in the Urgent Project Study and the Master Plan.

(b) Public Facilities

Damage to public facilities is estimated in proportion to the damage to general assets (houses/buildings and their indoor movables) calculated above excluding the damage to agricultural crops, aquacultural crops and damages caused by business suspension. Proportions applied for this estimation are as follows:

Roads and Bridges	28.2%
Farm Land	5.6%
Agricultural Facilities	43.4%
Railways	13.2%
Telecommunications	3.1%
Electric Power Facilities	2.3%

These rates are the same as those used in the Urgent Project Study and the Master Plan.

(4) Indirect Damage

Damage caused by business suspension due to the flood is estimated using the rate (6%) to the damage to general assets (houses/buildings and their indoor movables).

This rate is applied on the basis of the field survey and other reports on flood control projects similar to this Study as well as the "Main Principles on Investigation of River Economy, Ministry of Construction, Japan."

(5) Damage Rate by Inundation Depth

The same damage rates used in the Urgent Project are applied in this section. However, the inundation duration does not influence the damage rates because the inundations start almost at the same point of time and cease almost at the same point of time in a day, lasting not more than 12 hours regardless of their return periods.

Inundation depth is calculated on the mesh unit basis for the floods of 10-, 25-, 50-, and 100-year return periods.

(6) Calculated Flood Damage

Direct flood damage as well as the indirect one is calculated for each mesh in four cases of flooding conditions: 10-, 25-,50-, and 100-year return periods. Results are presented in Table XIV.2.3(4/6).

Estimation of Annual Average Benefit

Flood control benefit is defined as the expected amount of average annual reduction of damage by the designed works, and it can be calculated in the same procedure and formula as the Urgent Project Study and the Master Plan.

The annual average benefit of the project in the year 2015 is estimated at Rp. 27,264 million. Details of the calculation are presented in Table XIV.2.4(4/6).

3.1.3 Economic Project Cost

Economic costs of the project are nominal figures that duly reflect the true economic value of goods and services involved. These costs are used only for the economic evaluation of the Project.

Transfer items such as taxes and duties imposed on construction materials and equipment, including government subsidy and contractor's profit, are excluded from the elements of the financial cost.

Economic wage of unskilled laborers employed for construction works of the Project is assumed to be 80% of the actual market wage, taking account of the employment opportunity of laborers in Indonesia. The economic project cost is thus estimated at Rp. 84,390 million [refer to Table XII.5.11(1/5)].

The estimated administration and engineering service costs are applied as the economic cost. Economic price of land to be acquired for the project implementation is considered to correspond to the productivity foregone by the project, which is reflected by the estimated land acquisition cost. Price contingency is not considered in the economic cost while physical contingency is included.

3.1.4 Economic Evaluation on Flood Control Project

Annual Cost-Benefit Flow

To calculate EIRR, B/C and NPV of the Flood Control Project, the annual cost-benefit flow is estimated based on the implementation schedule, as shown in Table XIV.3.1.

The benefit is assumed to accrue during the construction period because some of the completed works may bring about flood control effect to a certain degree, and to increase gradually until the year 2015 and keep the same level until the end of project life. The estimated operation, maintenance and replacement (OMR) cost is needed annually after project completion to keep duly the designed function.

Evaluation of the Flood Control Project

The EIRR as well as B/C and NPV for the project is calculated on the annual cost-benefit flow. Opportunity cost of capital is considered to be 10% in the project. Then, the discount rate of 10% is applied for the calculation of B/C and NPV. The economic viability is figured out as follows (refer to Table XIV.3.1):

EIRR : 16.2%
B/C : 1.90
NPV : Rp. 51,626 million

Sensitivity Analysis

Sensitivity analysis is carried out from two aspects. One is for changes in the benefit or cost and the other is for the order of implementation of

river improvement for West Floodway/Garang River and construction of Jatibarang Dam on some cases of investment schedule.

(1) Changes in Benefit or Cost

Sensitivity analysis for the project on several cases of changes in the benefit or cost is summarized below.

Case	EIRR (%)	B/C	NPV (mil.Rp.)
Project Benefit, 5% down	15.6	1.81	46,427
Project Benefit, 10% down	15.1	1.72	41,229
Project Cost, 5% up	15.6	1.81	48,765
Project Cost, 10% up	15.1	1.73	45,905

(2) Changes in Implementation Schedule

Sensitivity analysis for the implementation schedule on the river improvement of West Floodway/Garang River and Jatibarang Dam construction is carried out on three cases; namely, the simultaneous implementation of both sub-projects which was proposed in the master plan, the river improvement works first (Alternative 1), and the dam construction works first (Alternative 2).

The annual benefit for the simultaneous implementation of both projects was estimated in the master plan as 27,264 million Rp. [refer to Table XIV.2.4(4/6)].

The annual average benefits for the river improvement only and the dam construction only are estimated separately, because the

generating years of benefits are different for the two alternatives mentioned above.

The annual average benefit of the river improvement is the same as the one proposed for the Urgent Project (refer to Table XIV.1.14).

The annual average benefit of the dam construction only was estimated by interpolation with regard to peak discharge (Qmax) and overflow volume (Vmax) in the case of with-project for the return periods of 25-, 50- and 100-year. The estimated benefits for overflow volume is adopted from the viewpoint of safety (refer to the Tables XIV.3.2 to XIV.3.5)

The annual cost-benefit flows of the three cases are shown in Tables XIV.3.6 to XIV.3.8.

Sensitivity analysis for the river improvement of West Floodway/Garang River and Jatibarang Dam construction on the three cases is summarized below.

Case	EIRR (%)	B/C	NPV (mil.Rp.)
Simultaneous Implementation	16.2	1.90	51,626
River Improvement Works First (Alternative 1)	16.5	1.95	47,882
Dam Construction Works First (Alternative 2)	20.9	2.40	56,235

3.1.5 Project Justification

The EIRR of the Flood Control Project shows 16.2%, and in any case of the sensitivity analysis on cases of changes in the benefit or cost, it is over

15% as presented above. The Flood Control Project is, therefore, evaluated to have an adequate economic viability.

Furthermore, consideration is given to the exclusion of intangible benefits brought about by the project such as saving of invaluable human lives that may possibly be lost by flooding, protection from possible injuries, and prevention of disease occurrence. If these intangible benefits are quantified, the EIRR can be a higher value and viability of the project will increase.

In the sensitivity analysis for changes of implementation schedule with regard to the river improvement and the dam construction, the EIRRs of all cases show over 16%.

3.2 Urban Drainage Plan

The economic evaluation on the Urban Drainage Plan is conducted for Central Semarang Area which was recommended as the priority area in the Master Plan, as follows:

(1) Pump drainage works for Bandarharjo West area of 0.58 km^2;

(2) Pump drainage works for the Asin river basin of 4.252 km^2;

(3) Pump drainage works for Bandarharjo East area of 1.49 km^2;

(4) Raising of earth dike (Type B, L = 2.36 km) and retaining wall (Type C, L = 0.54 km) of Semarang River from the river mouth to the national railway crossing;

(5) Construction of gate structure in Baru River;

(6) Raising of retaining wall (Type D, L = 800 m) of Baru River from Ring Road crossing to junction with Semarang River; and

(7) Dredging of Semarang River (approx. V = 87,000 m^3) from the river mouth to Jl. Pandanaran crossing (L = 6.9 km).

3.2.1 Basic Conditions

The basic conditions for the economic evaluation of the project for Central Semarang Area are basically the same as those of the Urgent Project and the Master Plan, and summarized as follows:

(1) Annual average benefit or potential flood damage is calculated by the mesh unit (250 m x 250 m) in accordance with the interview survey;

(2) The target completion year is fixed at the year 2000, and the project life is assumed to be 50 years, considering the durable life of facilities to be installed and other similar projects in Indonesia;

(3) Project benefit is estimated on the projected development stages in 1993 and 2015 on the assumption that project benefit will increase yearly from 1993 to 2015 and it will be constant from 2015 onward; and

(4) Currency conversion rates are assumed at US$1.00 = Rp. 2,033 and ¥.1.00 = Rp. 16.20.

3.2.2 Economic Benefit

Project benefit is defined as the reduction of inundation damage attributed to the design works. The reduction is obtained as the difference between the estimated inundation damage under the with- and the without-the-project situations.

Methodology and Calculation Conditions

(1) Mesh Data

From the economic viewpoint, inundation and assets are examined in the project area, which is divided into 123 of mesh units with design scale of 5 year return period.

The identification of land use in each mesh of the project area is the same as the one made for the Flood Control Plan.

(2) Damage

Although the drainage problem causes a wide variety of indirect damage including sanitary deterioration and traffic jam, the estimation of damage is limited to the direct one because reliable data is not available for the indirect damage and it is extremely difficult to figure out the extent to which the people suffer from the damage.

The principles and data used in the classification and calculation of flood damage potential are also used in this section. However, the inundation model is not used for the calculation of inundation depth because it

is not appropriate for the analysis of drainage problem. Therefore, an interview survey was carried out for the estimation of the annual average damage caused by drainage problems.

In the interview survey, habitual inundation data, including annual average inundation depth, times per year, and duration, were collected at one or two points within areas of the 123 mesh units. These data were cross-checked with data of the interview survey conducted in the Master Plan.

Estimation of Annual Average Benefit

Damage rates employed in the Flood Control Plan were examined and corrected for the estimation of the relation between inundation depth and its damage. It is assumed that the annual average damage increases due to the average inundation frequency. Then, annual average benefit is calculated as the probable annual damage reduction by the Urban Drainage Plan with the appropriate design scale.

The expected value of reduction is estimated at Rp. 10,059 million on the condition that damage reduction probability is 0.8 and design scale is 5-year return period. Details are shown in Tables XIV.3.9 and XIV.3.10.

3.2.3 Economic Project Cost

The principles used in the calculation of economic project cost for the Flood Control Plan were also used for the Urban Drainage Plan.

The dredging cost for the pump drainage area downstream of Semarang River is taken into consideration in the economic cost, but the dredging cost for the upstream area is excluded because the benefit corresponding to the cost accruing from the dredging works for the upstream is difficult to be estimated.

The economic project cost is thus estimated at Rp. 34,025 million [refer to Fig. XII.5.11(2/5)].

3.2.4 Economic Evaluation on Urban Drainage Plan

Annual Cost-Benefit Flow

To calculate EIRR, B/C and NPV of the project, the annual cost-benefit flow is estimated based on the implementation schedule, as shown in Table XIV.3.11.

The benefit is assumed to accrue at the same level until the end of project life. The estimated operation, maintenance and replacement (OMR) cost is needed annually after project completion to keep duly the designed function.

Evaluation of the Urban Drainage Project

The EIRR as well as B/C and NPV for the project is calculated on the annual cost-benefit flow. A discount rate of 10% is applied for the calculation of B/C and NPV. The economic viability is figured out as follows:

EIRR : 15.7%
B/C : 1.81
NPV : Rp. 14,872 million

Sensitivity Analysis

Sensitivity analysis is carried out for the project on several cases of changes in the benefit or cost as summarized below.

Case	EIRR (%)	B/C	NPV (mil.Rp.)
Benefit, 5% down	14.5	1.66	10,873
Benefit, 10% down	13.9	1.57	9,431
Cost, 5% up	14.5	1.66	11,489
Cost, 10% up	14.0	1.59	10,663

3.2.5 Project Justification

The EIRR of the Urban Drainage Project shows 15.7%, and in any case of the sensitivity analysis, it is almost 14% or more as presented above. The Urban Drainage Project is, therefore, evaluated to have an adequate economic viability.

Furthermore, consideration is given to the exclusion of intangible benefits brought about by the project already mentioned for the flood control and the dredging works for the area upstream of Semarang River. If these benefits are quantified, the EIRR could be a higher value and viability of the project will increase.

3.3 Water Resources Development Plan

The Water Resources Development Plan aims to match the demand in 2005 for (1) Public Water, and (2) River Maintenance Flow. Project benefit is examined for each of them.

The economic evaluation for the Water Resource Development Project is conducted for Jatibarang Reservoir which was recommended as the priority project because of highest cost efficiency and minimum social impact in the Master Plan.

3.3.1 Economic Benefit

Raw Water Rate

Since the water resources development plan for public water supply does not contain construction of treatment plant and distribution system, the benefit on the economic evaluation is considered as the incremental water supply at the point of water intake facilities. The evaluation of public water supply benefits is done using the principle that benefits equal the costs of the most likely alternative sources of producing comparable quantity and quality of water.

Through the collection and analysis of data and information from officials of GOI during the study period, the following facts regarding the raw water rate were obtained:

(1) Previous Study

According to the report of Jratunseluna Basin Updated Development Plan issued in May 1980, the raw water rate of \$78.67/1,000m^3 was established for the economic evaluation. Converting this figure into the current rate in 1992 with the annual inflation rate of 6% and the exchange rate of Rp. 2,033/\$, the raw water rate is estimated to be Rp. 320/m^3

(2) Review of Alternative Water Supply Project

According to the report of Water Supply Plan for Demak and Eastern Semarang Areas issued by Jratunseluna Project in November 1992, the construction cost of Dolok Dam including the sub-canal to convey water to the main canal was estimated at Rp. 43,875 million. Considering the alternative cost to be amortized which is Rp. 43,875 million and the water supply capacity of 1.0m^3/s of Dolok Reservoir, the raw water rate is estimated to be Rp. 260/m^3.

Based on the results of above-mentioned investigation, the annual benefit of public water supply can be set at about Rp. 300/m^3 with more accuracy as the rate of raw water to produce alternative water supply of equal quantity and quality. The evaluation on the priority project of the Feasibility Study is executed with this annual benefit.

Public Water

Since this water supply plan does not contain construction of treatment plants and distribution system, the benefit is considered with regard to the incremental water supply at the water sources. The proposed water source and its supply volume is as follows:

Water Source	Supply Volume (m^3/s)	Starting Year
Jatibarang Reservoir	1.96	2000

Then the annual average benefit for public water is estimated at Rp. 18,543 million (1.96 m^3/s x 365 days x 24 hrs. x 60 min. x 60 sec. x 300 Rp./m^3).

Maintenance Flow

The low flow of rivers is maintained mainly to preserve or improve present environmental conditions in and around rivers. Although no one can deny that this flow yields a certain amount of benefit to the residents, it is extremely difficult to figure out exactly what the benefit is, and to estimate the extent to which the people receives the benefit.

However, in order to calculate the value of water production, the value of maintenance flow is estimated at Rp. 300 per cubic meter as the value of abandonment of public water supply because this amount of water would be otherwise used for public water. Much attention is paid to the benefit that cannot be evaluated numerically.

If water of 0.50 m^3/s will be supplied by Jatibarang Reservoir from the year of 2000 and the annual average benefit for maintenance flow is estimated at Rp. 4,730 million (0.5 m^3/s x 365 days x 24 hrs. x 60 min. x 60 sec. x 300 Rp./m^3), then the total annual average benefit of public water supply and maintenance flow is to be Rp. 23,273 million.

3.3.2 Economic Project Cost

The principles used in the calculation of economic project cost for the Flood Control Plan are used also for the Water Resources Development Plan. The economic project cost is thus estimated at Rp. 50,517 million [refer to Table XII.5.11(3)].

3.3.3 Economic Evaluation on Water Resources Development Plan

Annual Cost-Benefit Flow

To calculate EIRR as well as B/C and NPV of the project, the annual cost-benefit flow is estimated based on the implementation schedule, as shown in Table XIV.3.12.

The benefit is assumed to accrue at the same level until the end of project life. The estimated operation, maintenance and replacement (OMR) cost is needed annually after project completion to keep duly the designed function.

Evaluation of the Water Resources Development Plan

The EIRR as well as B/C and NPV for the project is calculated on the annual cost-benefit flow. A discount rate of 10% is applied for the calculation of B/C and NPV. The economic viability is figured out as follows:

EIRR : 28.8%
B/C : 3.81
NPV : Rp. 96,030 million

Sensitivity Analysis

Sensitivity analysis is carried out for the project on several cases of changes in the benefit or cost as summarized in the following table.

Case	EIRR (%)	B/C	NPV (mil.Rp.)
Benefit, 5% down	27.7	3.62	89,517
Benefit, 10% down	26.7	3.43	83,004
Cost, 5% up	27.8	3.62	94,318
Cost, 10% up	26.9	3.46	92,607

3.3.4 Project Justification

The EIRR of the Water Resource Development Project shows 28.8%, and in any case of the sensitivity analysis, it is over 26% as presented above. The Water Resource Development Plan is, therefore, evaluated to have an adequate economic viability.

Furthermore, consideration is given to the exclusion of intangible benefits such as preservation or improvement of environment that may be lost without the project in this calculation. If these intangible benefits are quantified, the EIRR could be a higher value and viability of the project will increase.

3.4 Hydropower Generation Plan

The economic evaluation on the Hydropower Generation Plan is conducted for Jatibarang Dam which was recommended as the first priority project with regard to the Water Resource Development Plan in the Master Plan.

3.4.1 Economic Benefit

Methodology for the Estimation of Economic Benefit

It is considered to be difficult to estimate directly the economic benefit of the hydropower generation plan. Therefore, economic benefit is estimated by means of the "alternative facility cost method" which is a method to evaluate the cost of alternative facility as the benefit of the project, because the cost of alternative facility will be saved when the project will be implemented. In this method, the alternative facility is considered to be the second best with the same characteristics as the hydropower generation project with regard to power supply.

Practically, kWh value (capacity value or energy value) as the economic benefit of the hydropower generation plant established as an annex to Jatibarang Dam is equivalent to kWh cost of alternative power generation plant. In this project, a hypothetical diesel plant is assumed to be the alternative power generation plant and kWh cost is estimated as follows:

(1) Power Output

The power output of the hypothetical diesel plant is assumed to be 1,200 kW.

(2) Construction Cost

The construction cost of the diesel plant including costs of electrical equipment, civil works and construction works is calculated as follows:

1,200 kW x 1,300 US$/kW = 1,560,000 US$

(3) Fuel Cost and Lubricant Cost

Fuel cost and lubricant cost per kWh of the diesel plant are calculated respectively as follows:

Fuel Cost/kWh = 0.280 l/kWh x 0.148 US$/l
= 0.041 US$/kWh

Lubricant Cost/kWh = 0.002 l/kWh x 1.230 US$/l
= 0.002 US$/kWh

The annual energy output is estimated to be 6,710,000 kWh/year, taking account of the annual hours (8,760 hr.) and the capacity factor (0.65), i.e., 1,200 kWh x 8,760 hr x 0.65 = 6,710,000 kWh/year.

The annual fuel and lubricant cost is calculated from the annual energy output as follows:

6,710,000 kWh x [0.041 US$/kWh + 0.002 US$/kWh]
= 288,500 US$/year

(4) Annual Operation and Maintenance Cost

The annual operation and maintenance cost of the diesel plant is assumed to be 4.5% of the construction cost mentioned above. The cost is calculated as follows:

1,560,000 US$ x 0.045 = 70,200 US$/year

(5) Annual Capital Recovery Cost

The annual capital recovery factor (ARF) is estimated at 11.75% per year on the condition that the opportunity cost of capital as discount rate in Indonesia is 10% per year and the economic life of the diesel plant is 20 years. The annual capital recovery cost is calculated as follows:

1,560,000 US$ x 0.1175 = 183,300 US$

Annual Cost

Annual cost is estimated by the summation of each annual cost mentioned above, as follows:

Fuel and Lubricant Cost	288,500 US$
Operational and Maintenance Cost	70,200
Capital Recovery Cost	183,300
Total	542,000 US$

The annual cost of the diesel plant is thus estimated at 542,000 US$ (Rp. 1,101.9 million).

Annual Benefit of the Project

The cost per kWh of the diesel plant is calculated as follows:

542,000 US$ / 6,710,000 kWh/year
= 0.081 US$/kWh

It is assumed that power output and the capacity factor of the hydropower generation are 1,500 kW and 1.0, respectively. The reason why the capacity factor is 1.0 is that the loss of power transmission

is very small because of the small scale of power generation and the short distance of power transmission. The annual energy power by the hydropower generation is estimated at 6,710 MWh.

Therefore, the annual benefit of the Hydropower Generation Project as energy value is calculated as follows:

0.081 US$ x 6,710,000 kWh/year = 543,510 US$/year
= Rp. 1,105 million/year

3.4.2 Economic Project Cost

The principles used in the calculation of economic project cost for the Flood Control Project are used also for the Hydropower Generation Project [refer to Table XII.5.11(5/5)]. The economic project cost is thus estimated at Rp. 12,320 million.

3.4.3 Economic Evaluation on Hydropower Generation Plan

Annual Cost-Benefit Flow

To calculate EIRR as well as B/C and NPV of the project, the annual cost-benefit flow is estimated based on the implementation schedule, as shown in Table XIV.3.13.

The benefit is assumed to accrue at the same level during the project life. The estimated operation, maintenance and replacement (OMR) cost is needed annually after project completion to keep duly the designed function.

Evaluation of the Hydropower Generation Project

The EIRR as well as B/C and NPV of the project is calculated on the annual cost-benefit flow. A discount rate of 10% is applied for the calculation of B/C and NPV. The economic viability is figured out as follows:

EIRR : 5.9%
B/C : 0.66
NPV : Rp. -3,410 million

Sensitivity Analysis

Sensitivity analysis is carried out for the project on several cases of changes in the benefit or cost as summarized below.

Case	EIRR (%)	B/C	NPV (mil.Rp.)
Benefit, 5% down	5.5	0.63	-3,449
Benefit, 10% down	5.0	0.60	-3,758
Cost, 5% up	5.5	0.63	-3,606
Cost, 10% up	5.1	0.60	-4,072

3.4.4 Project Justification

The EIRR of the Hydropower Generation Project shows 5.9%, and in any case of the sensitivity analysis, it is under 6% as presented above. The Hydropower Generation Project is, therefore, evaluated not to have an adequate economic viability.

Furthermore, consideration is given to the exclusion of intangible benefits such as preservation or improvement of the environment that may be lost without the project in this calculation. If these

benefits are quantified, the EIRR could be higher than 5.9% but economic viability is difficult to expect.

3.5 Dam Construction Project

Jatibarang Dam is a multipurpose dam aiming at flood control, water supply and hydropower generation and was recommended as the priority project in the flood control plan and the water resources development plan in the Master Plan. It is then significant to conduct the economic evaluation on the dam construction plan itself by considering it as the multipurpose dam construction project.

3.5.1 Economic Evaluation on Dam Construction Project

Annual Cost-Benefit Flow

To calculate EIRR, B/C and NPV of the Dam Construction Project, the annual cost-benefit flow is calculated by summation of the annual costs and benefits of the Flood Control Project, the Water Resource Development Project and the Hydropower Generation Project, as shown in Table XIV.3.14. For the purpose of comparative study, the annual cost-benefit flow without the Flood Control Project is calculated, as shown in Table XIV.3.15.

Evaluation of the Dam Construction Project

The EIRR as well as B/C and NPV for the project is calculated on the annual cost-benefit flow. Opportunity cost of capital is considered to be 10% in the project, and discount rate of 10% is applied for the calculation of B/C and NPV. The economic viability is then figured out as follows:

EIRR : 23.2%
B/C : 2.84
NPV : Rp. 115,352 million

On the other hand, the economic viability without the Flood Control Project is figured out as follows:

EIRR : 25.8%
B/C : 3.13
NPV : Rp. 92,890 million

Sensitivity Analysis

Sensitivity analysis is carried out for the whole Dam Construction Project on several cases of changes in the benefit or cost as summarized below.

Case	EIRR (%)	B/C	NPV (mil.Rp.)
Project Benefit, 5% down	22.3	2.73	106,512
Project Benefit, 10% down	21.5	2.59	97,671
Project Cost, 5% up	22.4	2.74	112,279
Project Cost, 10% up	21.6	2.62	109,206

3.5.2 Project Justification

The EIRRs of the Jatibarang Dam Construction Project with and without the Flood Control Project shows a high value of 23.2% and 25.8%, respectively, and in any case of the sensitivity analysis, it is sufficiently over 20% as presented above. The Jatibarang Dam Construction Project is, therefore, evaluated to have an adequate economic viability.

Furthermore, consideration is given to the exclusion of intangible benefits brought about by the project

such as saving of invaluable human life that may possibly be lost by flooding, protection from possible injuries, prevention of disease occurrence, and preservation or improvement of the environment. If these benefits are quantified, the EIRRs could be a higher value and viability of the project will increase.

3.6 All Projects

An integrated economic evaluation is conducted for all optimum projects in the Feasibility Study. By this evaluation, the final judgment of viability is made possible for all projects.

3.6.1 Integrated Economic Evaluation of All Projects

Annual Cost-Benefit Flow

To calculate the EIRR, B/C and NPV of all projects, the annual cost-benefit flow is calculated by accumulation of the annual costs and benefits of all projects in the Feasibility Study consisting of the Flood Control Project, the Urban Drainage Project, the Water Resource Development Project, and the Hydropower Generation Project, as shown in Table XIV.3.16.

Integrated Evaluation

The EIRR as well as B/C and NPV for all projects as a whole is calculated on the annual cost-benefit flow. Opportunity cost of capital is considered to be 10% in the projects and the discount rate of 10% is applied for the calculation of B/C and NPV. The economic viability is then figured out as follows:

EIRR : 19.8%
B/C : 2.35
NPV : Rp. 160,463 million

Sensitivity Analysis

Sensitivity analysis is carried out for the projects as a whole on several cases of changes in the benefit or cost as summarized below.

Case	EIRR (%)	B/C	NPV (mil.Rp.)
Project Benefit, 5% down	18.5	2.20	139,660
Project Benefit, 10% down	17.8	2.09	126,200
Project Cost, 5% up	18.6	2.21	147,323
Project Cost, 10% up	17.9	2.11	141,513

3.6.2 Project Justification

The EIRR of the projects as a whole shows 19.2%, and in any case of the sensitivity analysis, it is over 17% as presented above. The projects for the Feasibility Study as a whole are, therefore, evaluated to have an adequate economic viability.

Furthermore, consideration is given to the exclusion of intangible benefits brought about by the project such as saving of invaluable human life that may possibly be lost by flooding, protection from possible injuries, prevention of disease occurrence, and preservation or improvement of the environment. If these benefits are quantified, the EIRR could be a higher value and viability of all projects for the Feasibility Study as as whole will increase.

TABLES

Table XIV.1.1 (1/4) DETAILED MESH DATA OF THE FLOOD PRONE AREA IN URGENT PROJECT

No.	X	Y	WP (ha)	FP (ha)	RS (ha)	ID (ha)	CM (ha)	PB (ha)	RD1 (m)	RD2 (m)	RD3 (m)	RW (m)
1	7	3						3.975				
2	6	4						3.198				
3	7	4						4.000				
4	8	4						3.091				
5	7	5						4.000				
6	8	5						2.796				
7	3	6										
8	4	6										
9	5	6										
10	6	6						3.295				
11	7	6						1.254				
12	8	6										
13	9	6										
14	3	7									200	
15	4	7									200	
16	5	7							200			
17	6	7						1.170	200			
18	7	7										
19	8	7										
20	9	7										
21	3	8										
22	4	8										
23	5	8						0.601				
24	6	8										
25	7	8								200		
26	8	8							50			
27	9	8							200			
28	10	8							150			
29	3	9		4.000								
30	4	9		2.592				0.690				
31	5	9						3.532				
32	6	9						1.807				
33	7	9						0.475				
34	8	9							230	285		
35	9	9								200		
36	10	9			0.858					300		
37	2	10		3.450								
38	3	10		2.680								
39	4	10		1.316				0.434				
40	5	10						4.000				
41	6	10						4.000				
42	7	10						2.924				
43	8	10				0.254			200	600		
44	9	10				1.298				400		
45	10	10			0.592	1.921				465		
46	2	11		3.421								
47	3	11		4.000								
48	4	11		3.250								
49	5	11							200			
50	6	11					0.712					
51	7	11							300			
52	8	11				1.433			200	312		
53	9	11				1.974				200		
54	10	11				1.377				375		
55	2	12	3.520									
56	3	12	4.000									
57	4	12	3.702									
58	5	12	0.618								200	
59	6	12							200		200	
60	7	12			1.195				100		260	
61	8	12			1.781				100		510	
62	9	12										
63	10	12										
64	2	13	3.249									
65	3	13	4.000									
66	4	13	3.881									
67	5	13	0.265				0.432			100	200	
68	6	13			1.229		0.484			100		
69	7	13			2.721				200		870	
70	8	13			3.559						910	

(Abbreviations)
WP: Wet Paddy, FP: Fishpond, RS: Residential, ID: Industry, CM:Commercial, PB: Public, RD: Road, RW: Railway
Notes:
RD1: Main (Arterian) Road whose pavement width is 7 m or more and used for inter-city traffic.
RD2: Local Road whose pavement width is 6 m or more and used for inter-city traffic.
RD3: Local Road whose pavement width is 3 - 6 m and it is passed by local traffic.

Table XIV.1.1 (2/4) DETAILED MESH DATA OF THE FLOOD PRONE AREA IN URGENT PROJECT

No.	X	Y	WP (ha)	FP (ha)	RS (ha)	ID (ha)	CM (ha)	PB (ha)	RD1 (m)	RD2 (m)	RD3 (m)	RW (m)
71	9	13										
72	10	13			0.251		0.113			200		
73	2	14	0.670		1.983					125	200	
74	3	14	0.968		2.682					350	150	
75	4	14	0.493							200	250	
76	5	14			1.237		0.208			400	115	
77	6	14					0.154				100	
78	7	14							230			
79	8	14										
80	9	14										
81	10	14							200			
82	2	15			2.792						550	
83	3	15			3.745						850	
84	4	15			3.752						825	
85	5	15			3.242					200	625	
86	6	15			0.131				260			
87	7	15			0.355				40			
88	8	15										
89	9	15			1.093						200	
90	10	15			0.905					200	225	
91	2	16			3.214						1,080	
92	3	16			3.410		0.329				870	
93	4	16			2.415		0.142		70		680	
94	5	16			1.872				225	200		
95	6	16			2.545						375	
96	7	16			2.936						700	
97	8	16			0.405						525	
98	9	16	1.511		2.256						775	
99	10	16	1.300		2.376					200	680	
100	2	17			3.411						1,100	
101	3	17			3.748						840	
102	4	17			2.272					400	440	
103	5	17			3.280		0.444			200	520	
104	6	17			3.694						1,020	
105	7	17	1.433		2.411						520	
106	8	17			3.625						1,250	
107	9	17			3.640						1,200	
108	10	17			3.586					200	750	
109	2	18	1.338		1.140						200	
110	3	18	1.483		2.217				200		380	
111	4	18			3.078					200	480	
112	5	18			3.343		0.327				1,100	
113	6	18			3.670						1,100	
114	7	18			3.477			0.095		230	820	
115	8	18			3.700						1,000	
116	9	18			3.700						1,000	
117	10	18			3.647					200	775	
118	2	19	4.000									
119	3	19	3.468						200			
120	4	19			2.566					200	460	
121	5	19			3.640					200	800	
122	6	19			3.700						1,000	
123	7	19			3.640					200	800	
124	8	19			3.700						1,000	
125	9	19			3.640						1,200	
126	10	19			3.501			0.151		200	760	
127	2	20	3.044		0.416							200
128	3	20	1.418		1.390				200			200
129	4	20			3.465					200	550	200
130	5	20			3.660						800	200
131	6	20			3.630						900	200
132	7	20			3.540					200	800	200
133	8	20			3.540						1,200	200
134	9	20			3.600						1,000	200
135	10	20			2.776			0.866		200	460	200
136	12	20			3.810						300	200
137	13	20			3.840						200	200
138	2	21	2.252		1.643						350	
139	3	21			3.121				200		790	
140	4	21			2.001			1.612		200	890	

(Abbreviations)
WP: Wet Paddy, FP: Fishpond, RS: Residential, ID: Industry, CM:Commercial, PB: Public, RD: Road, RW: Railway
Notes:
RD1: Main (Arterian) Road whose pavement width is 7 m or more and used for inter-city traffic.
RD2: Local Road whose pavement width is 6 m or more and used for inter-city traffic.
RD3: Local Road whose pavement width is 3 - 6 m and it is passed by local traffic.

Table XIV.1.1 (3/4) DETAILED MESH DATA OF THE FLOOD PRONE AREA IN URGENT PROJECT

No.	X	Y	WP (ha)	FP (ha)	RS (ha)	ID (ha)	CM (ha)	PB (ha)	RD1 (m)	RD2 (m)	RD3 (m)	RW (m)
141	5	21			3.631					200	830	
142	6	21			3.061			0.108			740	
143	7	21			2.074		0.866		1,000	200	800	
144	8	21			3.159		0.541				1,000	
145	9	21			2.740		1.020				800	
146	10	21			2.266	0.287	1.087			200	800	
147	12	21			3.514			0.186		200	600	
148	13	21			3.647					200	775	
149	2	22			2.097		0.755		200		390	
150	3	22			1.612		0.609	0.146			840	
151	4	22			2.778		0.625	0.269	200		625	
152	5	22			1.867	0.121	1.726	0.048	200		325	
153	6	22			1.486		2.302		210		215	
154	7	22			1.673		2.080		205		345	
155	8	22			1.563		2.123		200		580	
156	9	22			2.398		1.312		200		500	
157	10	22			2.598		0.882		435		415	
158	2	23			1.810		1.766		200		390	
159	3	23			2.408		1.272		200		600	
160	4	23			3.045		0.775				600	
161	5	23			3.090		0.628				940	
162	6	23			2.792	0.908					1,000	
163	7	23			3.799						670	
164	8	23			3.640						1,200	
165	9	23			3.760						800	
166	10	23			3.580					200	1,000	
167	12	23			3.003	0.734				100	675	
168	3	24			3.700					100	800	
169	4	24			3.703					200	590	
170	5	24			3.722						925	
171	6	24			3.125		0.740				450	
172	7	24			3.778						740	
173	8	24			3.640					200	800	
174	12	24			3.785						715	
175	13	24			3.791						695	
176	14	24			1.839		0.976	0.963		150	440	
177	12	25			3.812						625	
178	13	25			3.862						460	
179	14	25			0.680			3.096	200		125	
180	15	25						2.933	50			
181	12	26			3.595				405		405	
182	13	26			3.825						570	
183	14	26			0.904				200		150	
184	12	27			3.290						240	
185	13	27			0.384				250			
186	9	29			3.444			0.414		135	205	
187	10	29			3.427						360	
188	9	30			2.706			1.127		185	185	
189	10	30			2.484					170	390	
190	8	31			1.033	2.506		0.386			250	
191	9	31			3.682						260	
192	10	31			2.832				215			
193	8	32				3.844					330	
194	9	32			1.515							
195	10	32			2.202					240		
196	8	33			0.435	0.134						
197	9	33			0.965						260	
198	10	33			0.861			2.943		220		
199	5	34				4.000						
200	6	34										
201	7	34			0.840					120		
202	8	34			3.754					200	240	
203	3	35			0.588						80	
204	4	35			0.304						100	
205	5	35										
206	6	35										
207	3	36			2.432						40	
208	4	36			3.504						280	
209	5	36			2.173						205	
210	6	36			1.963					205	370	

(Abbreviations)
WP: Wet Paddy, FP: Fishpond, RS: Residential, ID: Industry, CM:Commercial, PB: Public, RD: Road, RW: Railway
Notes:
RD1: Main (Arterian) Road whose pavement width is 7 m or more and used for inter-city traffic.
RD2: Local Road whose pavement width is 6 m or more and used for inter-city traffic.
RD3: Local Road whose pavement width is 3 - 6 m and it is passed by local traffic.

Table XIV.1.1 (4/4) DETAILED MESH DATA OF THE FLOOD PRONE AREA IN URGENT PROJECT

No.	X	Y	WP (ha)	FP (ha)	RS (ha)	ID (ha)	CM (ha)	PB (ha)	RD1 (m)	RD2 (m)	RD3 (m)	RW (m)
211	2	37			1.215						75	
212	3	37			3.700			0.300				
213	4	37			3.583			0.300		195		
214	5	37			3.880					200		
215	6	37			3.935						215	
216	2	38			1.108						150	
217	3	38			3.598			0.300		60	220	
218	4	38			3.557			0.300		150	175	
219	5	38			3.859						470	
220	6	38			3.835						550	
221	2	39			0.782							
222	3	39			3.542					200	400	
223	4	39			3.820						600	
224	5	39			3.754						820	
225	6	39			3.871						430	
226	4	40			2.933						340	
227	5	40			3.916						280	
TOTAL			46.613	24.709	398.548	20.791	25.430	61.785	8,925	12,872	77,545	2,200

(Abbreviations)
WP: Wet Paddy, FP: Fishpond, RS: Residential, ID: Industry, CM:Commercial, PB: Public, RD: Road, RW: Railway
Notes:
RD1: Main (Arterian) Road whose pavement width is 7 m or more and used for inter-city traffic.
RD2: Local Road whose pavement width is 6 m or more and used for inter-city traffic.
RD3: Local Road whose pavement width is 3 ~ 6 m and it is passed by local traffic.

Table XIV.1.2 AVERAGE DAMAGEABLE VALUE OF WET PADDY

Item		Jan.	Feb.	Mar.	Apr.	May	June	July	Aug.	Sept.	Oct.	Nov.	Dec.
(1) Cultivation Calender		1st Crop			2nd Crop							1st Crop	
(2) Cultivated Area	1st Crop	100%	100%	75%	0%	0%	0%	0%	0%	0%	0%	75%	100%
	2nd Crop	0%	0%	25%	100%	100%	100%	100%	25%	0%	0%	0%	0%
(3) Accum. Cost	1st Crop	68%	74%	100%	0%	0%	0%	0%	0%	0%	0%	24%	46%
	2nd Crop	0%	0%	12%	35%	57%	71%	87%	100%	0%	0%	0%	0%
(4) Flood Frequency		18%	29%	41%	12%	0%	0%	0%	0%	0%	0%	0%	0%
(5) (2) x (4)	1st Crop	18%	29%	31%	0%	0%	0%	0%	0%	0%	0%	0%	0%
	2nd Crop	0%	0%	10%	12%	0%	0%	0%	0%	0%	0%	0%	0%
(6) Damageable Value*	1st Crop	370,959	637,588	757,390	0	0	0	0	0	0	0	0	0
(Rp./ha)	2nd Crop	0	0	153,269	204,794	0	0	0	0	0	0	0	0

Average Damageable Value	(Rp./ha)	2,124,000
Rounding	(Rp./ha)	2,124,000

(Remarks)
(a) Economic Production Cost (Rp./ha) = 1,095,000 (Refer to Table XIV.1.3)
(b) Yield (ton/ha) = 7.50
(c) Economic Price (Rp./ton) = 327,000 (Refer to Table XIV.1.4)
(d) Net Income (Rp./ha) = 1,357,500
((b) x (c) - (a))

Note :
Damageable Value* = (5) x ((3) x (a) + (d))

Source : Cost Analysis of Farming (per ha), 1991/1992; Office of Crop, Dept. of Agri., Central Jawa Province

Table XIV.1.3 ECONOMIC PRODUCTION COST OF WET PADDY FOR ONE SEASON

Description	Financial Cost (Rp./ha)	Economic Cost* (Rp./ha)
(1) Labor	464,000	371,000
(2) Seed	18,000	16,000
(3) Fertilizer	158,000	143,000
(4) Pesticide	72,500	65,000
(5) Land rental per season	550,000	500,000
(6) Tax	25,000	0
Total	1,287,500	1,095,000

Note * : Tax deduction (10%)
Labor cost = 80% of the market wage rate

Source : Cost Analysis of Farming (per ha), 1991/1992
Office of Crop, Dept. of Agri., Central Jawa Province

Table XIV.1.4 ECONOMIC PRICE OF WET PADDY
(Import Parity Price)
Price level: 1992
Conversion Rate: US$ 1.00 =RP.2033

	Description	Unit	Value
(1)	FOB Bangkok Price (Tai 5% broken)	US$/ton	300
(2)	Quality Adjustment (27%)	US$/ton	219
(3)	Freight and Insurance	US$/ton	40
(4)	CIF Semarang	US$/ton	259
(5)	CIF Semarang Rupiah Equivalent	Rp./ton	0
(6)	Port Costs, etc.	Rp./ton	25,000
(7)	Transportation (Port to Wholesaler in Semarang)	Rp./ton	5,000
(8)	Ex Mill Price	Rp./ton	30,000
(9)	Conversion to Wet Paddy (60%)	Rp./ton	18,000
(10)	Milling Costs	Rp./ton	(1,400)
(11)	Transportation (Farm to Mill)	Rp./ton	(5,000)
	Parity Price	Rp./ton	11,600
	Rounding		11,000

Sources:
(1) Price Prospects for Major Primary Commodities, 1990-2005; The World Bank
(2) Jratunseluna River Basin Development Project, Tuntang-Jragung Area Studies and Design; Ministry of Public Works, Republic of Indonesia

Table XIV.1.5 (1/5) AVERAGE DAMAGEABLE VALUE OF FISHPOND (INTAM A1*)

Item		Jan.	Feb.	Mar.	Apr.	May	June	July	Aug.	Sept.	Oct.	Nov.	Dec.
INTAM A1*													
(1) Cultivation Calender		1st Crop						2nd Crop				1st Crop	
						* Preparatory Works						* Preparatory Works	
(2) Cultivated Area	1st season	100%	100%	100%	50%						50%	100%	100%
	2nd season				50%	100%	100%	100%	100%	100%	50%		
(3) Accum. Cost	1st season	78%	87%	96%	100%						30%	60%	69%
	2nd season				30%	60%	69%	78%	87%	96%	100%		
(4) Flood Frequency		18%	29%	41%	12%								
(5) (2) x (4)	1st season	18%	29%	41%	6%	0%	0%	0%	0%	0%	0%	0%	0%
	2nd season	0%	0%	0%	6%	0%	0%	0%	0%	0%	0%	0%	0%
(6) Damageable Value** (Rp./ha)	1st season	524,970	907,072	1,314,872	190,694	0	0	0	0	0	0	0	0
	2nd season	0	0	0	140,726	0	0	0	0	0	0	0	0

Average Damageable Value (Rp./ha) 3,078,334
Rounding (Rp./ha) 3,078,000

(Remarks)
(a) Economic Production Cost (Rp./ha) = 1,213,500 (Refer to Table XIV.1.7)
(b) Yield (ton/ha) = 0.2
(c) Economic Price (Rp./ton) = 16,209,000 (Refer to Table XIV.1.8)
(d) Net Income (Rp./ha) = 2,028,300
((b) x (c) - (a))

Notes :
* Fishpond Cultivation Guideline for Prawn
** Damageable Value = (5) x ((3) x (a) + (d))

Source : Evaluation of INTAM Program Implementation in Central Jawa 1991/1992; Fishery Office, Central Jawa Province

Table XIV.1.5 (2/5) AVERAGE DAMAGEABLE VALUE OF FISHPOND (INTAM A2*)

I t e m		Jan.	Feb.	Mar.	Apr.	May	June	July	Aug.	Sept.	Oct.	Nov.	Dec.
INTAM A2*													
(1) Cultivation Calender		1st Crop						2nd Crop				1st Crop	
						* Preparatory Works						* Preparatory Works	
(2) Cultivated Area	1st season	100%	100%	100%	50%						50%	100%	100%
	2nd season				50%	100%	100%	100%	100%	100%	50%		
(3) Accum. Cost	1st season	66%	80%	93%	100%						20%	41%	52%
	2nd season				20%	41%	52%	66%	80%	93%	100%		
(4) Flood Frequency		18%	29%	41%	12%								
(5) (2) x (4)	1st season	18%	29%	41%	6%	0%	0%	0%	0%	0%	0%	0%	0%
	2nd season	0%	0%	0%	6%	0%	0%	0%	0%	0%	0%	0%	0%
(6) Damageable Value**	1st season	2,001,859	3,533,029	5,201,817	762,776	0	0	0	0	0	0	0	0
(Rp./ha)	2nd season	0	0	0	538,094	0	0	0	0	0	0	0	0

Average Damageable Value (Rp./ha) 12,037,577
Rounding (Rp./ha) 12,037,000

(Remarks)
(a) Economic Production Cost (Rp./ha) = 4,774,500 (Refer to Table XIV.1.7)
(b) Yield (ton/ha) = 0.8
(c) Economic Price (Rp./ton) = 16,209,000 (Refer to Table XIV.1.8)
(d) Net Income (Rp./ha) = 8,192,700
((b) x (c) - (a))

Notes :
* Fishpond Cultivation Guideline for Prawn
** Damageable Value = (5) x ((3) x (a) + (d))

Source : Evaluation of INTAM Program Implementation in Central Jawa 1991/1992; Fishery Office, Central Jawa Province

Table XIV.1.5 (3/5) AVERAGE DAMAGEABLE VALUE OF FISHPOND (INTAM A3*)

I t e m		Jan.	Feb.	Mar.	Apr.	May	June	July	Aug.	Sept.	Oct.	Nov.	Dec.
INTAM A3*													
(1) Cultivation Calender		1st Crop						2nd Crop				1st Crop	
						* Preparatory Works						* Preparatory Works	
(2) Cultivated Area	1st season	100%	100%	100%	50%						50%	100%	100%
	2nd season				50%	100%	100%	100%	100%	100%	50%		
(3) Accum. Cost	1st season	64%	78%	93%	100%						20%	37%	49%
	2nd season				20%	37%	49%	64%	78%	93%	100%		
(4) Flood Frequency		18%	29%	41%	12%								
(5) (2) x (4)	1st season	18%	29%	41%	6%	0%	0%	0%	0%	0%	0%	0%	0%
	2nd season	0%	0%	0%	6%	0%	0%	0%	0%	0%	0%	0%	0%
(6) Damageable Value**	1st season	4,964,188	8,764,059	13,005,300	1,906,941	0	0	0	0	0	0	0	0
	2nd season	0	0	0	1,346,471	0	0	0	0	0	0	0	0

Average Damageable Value (Rp./ha) 29,986,959
Rounding (Rp./ha) 29,986,000

(Remarks)
(a) Economic Production Cost (Rp./ha) = 11,910,000 (Refer to Table XIV.1.7)
(b) Yield (ton/ha) = 2.0
(c) Economic Price (Rp./ton) = 16,209,000 (Refer to Table XIV.1.8)
(d) Net Income (Rp./ha) = 20,508,000
((b) x (c) - (a))

Notes :
* Fishpond Cultivation Guideline for Prawn
** Damageable Value = (5) x ((3) x (a) + (d))

Source : Evaluation of INTAM Program Implementation in Central Jawa 1991/1992; Fishery Office, Central Jawa Province

Table XIV.1.5 (4/5) AVERAGE DAMAGEABLE VALUE OF FISHPOND (INTAM B1*)

Item		Jan.	Feb.	Mar.	Apr.	May	June	July	Aug.	Sept.	Oct.	Nov.	Dec.
INTAM B1*													
(1) Cultivation Calender		1st Crop				* Preparatory Works		2nd Crop				* Preparatory Works	1st Crop
(2) Cultivated Area	1st season	100%	100%	100%	50%						50%	100%	100%
	2nd season				50%	100%	100%	100%	100%	100%	50%		
(3) Accum. Cost	1st season	84%	90%	97%	100%						35%	71%	77%
	2nd season				35%	71%	77%	84%	90%	97%	100%		
(4) Flood Frequency		18%	29%	41%	12%								
(5) (2) x (4)	1st season	18%	29%	41%	6%	0%	0%	0%	0%	0%	0%	0%	0%
	2nd season	0%	0%	0%	6%	0%	0%	0%	0%	0%	0%	0%	0%
(6) Damageable Value** (Rp./ha)	1st season	516,995	881,882	1,267,667	183,118	0	0	0	0	0	0	0	0
	2nd season	0	0	0	139,300	0	0	0	0	0	0	0	0

Average Damageable Value (Rp./ha) 2,988,962
Rounding (Rp./ha) 2,988,000

(Remarks)
(a) Economic Production Cost (Rp./ha) = 1,146,000 (Refer to Table XIV.1.7)
(b) Yield (ton/ha) = 0.45
(c) Economic Price (Rp./ton)*** = 6,918,000
(d) Net Income (Rp./ha) = 1,967,000
((b) x (c) - (a))

Notes:
* Fishpond Cultivation Guideline for Prawn and Milkfish
** Damageable Value = (5) x ((3) x (a) + (d))
*** Weighted average of Prawn and Milkfish
= ((Economic Price of Prawn) x 1.5 (ton/ha) + (Economic Price of Milkfish) x 3.0 (ton/ha)) / (1.5 + 3.0)

Source : Evaluation of INTAM Program Implementation in Central Jawa 1991/1992; Fishery Office, Central Jawa Province