JICA BASIC DESIGN STUDY REPORT ON THE PROJECT FOR CONSTRUCTION OF BRIDGES ALONG RURAL ROADS IN MINDANAO AREA IN THE REPUBLIC OF THE PHILIPPINES (DRAWINGS) DECEMBER 1994 KATAHIRA & ENGINEERS ORIENTAL CONSULTANTS

JAPAN INTERNATIONAL COOPERATION AGENCY

DEPARTMENT OF PUBLIC WORKS AND HIGHWAYS
THE REPUBLIC OF THE PHILIPPINES

BASIC DESIGN STUDY REPORT
ON
THE PROJECT FOR CONSTRUCTION OF BRIDGES
ALONG
RURAL ROADS IN MINDANAO AREA
IN
THE REPUBLIC OF THE PHILIPPINES

(DRAWINGS)

DECEMBER 1994

KATAHIRA & ENGINEERS INTERNATIONAL
ORIENTAL CONSULTANTS CO. LTD.

JAPAN INTERNATIONAL COOPERATION AGENCY

DEPARTMENT OF PUBLIC WORKS AND HIGHWAYS
THE REPUBLIC OF THE PHILIPPINES

BASIC DESIGN STUDY REPORT
ON
THE PROJECT FOR CONSTRUCTION OF BRIDGES
ALONG
RURAL ROADS IN MINDANAO AREA
IN
THE REPUBLIC OF THE PHILIPPINES

(DRAWINGS)

DECEMBER 1994

KATAHIRA & ENGINEERS INTERNATIONAL
ORIENTAL CONSULTANTS CO., LTD.

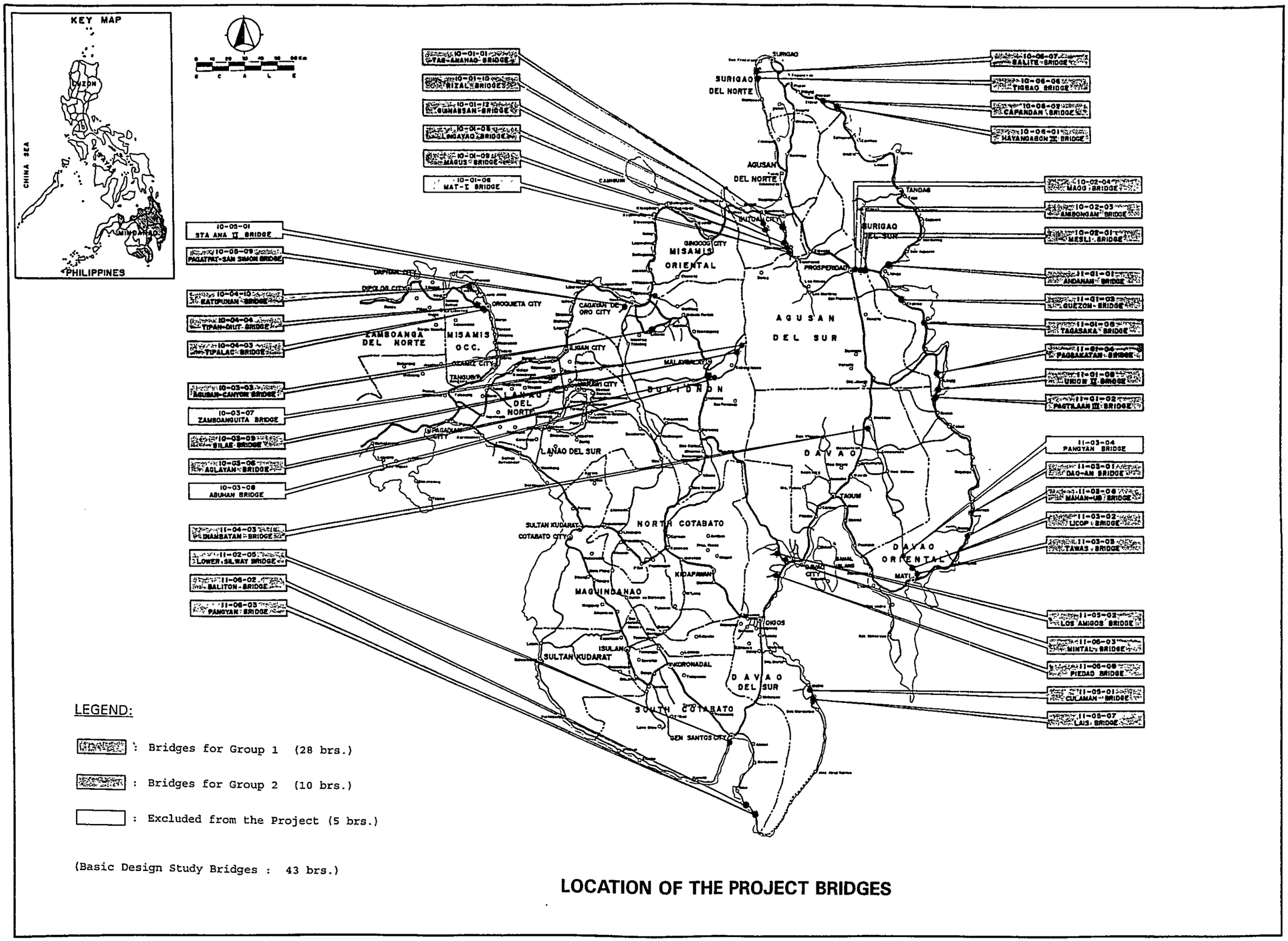

LEGEND:

: Bridges for Group 1 (28 brs.)

: Bridges for Group 2 (10 brs.)

: Excluded from the Project (5 brs.)

(Basic Design Study Bridges : 43 brs.)

LOCATION OF THE PROJECT BRIDGES

CONTENTS

LIST OF GROUP 1 BRIDGES

No.	Bridge No.	Name of Bridge	Location
1	10-01-01	Tag-Anahao	Km. 1264 + 050 Butuan City-Malaybalay Road, Butuan City Agusan del Norte
2	10-02-01	Mesli	Km. 1299 + 780 NRJ-Awa-Azpitia-Lianga National Secondary Road, Agusan del Sur
3	10-02-03	Anibongan	Km. 1297 + 655 NRJ-Awa-Azpitia-Lianga National Secondary Road, Agusan del Sur
4	10-03-03	Agusan Canyon	Km. 1452 + 000 Jct. Manolo Fortich-Libona-Indahad Road Agusan Canyon, Manolo Fortich, Bukidnon
5	10-03-06	Aglayan	Km. 1519 + 419.51 Jct. Sayre Highway Aglayan-Zamboanguita Rd. Barangay Aglayan, Malaybalay, Bukidnon
6	10-03-09	Silae	Km. 1559 + 465 Jct. Sayre Highway Aglayan-Zamboanguita Rd. Barangay Silae, Malaybalay, Bukidnon
7	10-04-03	Tipalac	Km. 1754 + 303.09 Oroquieta-Dipolog Mt. Road, Barangay Rizal Oroquieta City, Misamis Occidental
8	10-04-04	Tipan Diut	Km. 1753 + 933 Oroquieta-Dipolog Mt. Road, Barangay Tipan Oroquieta City, Misamis Occidental
9	10-04-10	Katipunan	Km. 1763 + 422 Looc-Katipunan-Cartagena-Luzaran Prov'l Road, Brgy. Katipunan, Plaridel Misamis Occidental
10	10-06-01	Hayangabon II	Km. 1195 + 345 Surigao-Davao Coastal Road, Surigao del Norte
11	10-06-02	Capandan	Km. 1186 + 970 Surigao-Davao Coastal Road, Surigao del Norte
12	10-06-06	Tigbao	Km. 470 + 430 Surigao-Anoa-aon-Malimono Road Surigao del Norte
13	10-06-07	Balite	Km. 469 + 420 Surigao-Anoa-aon-Malimono Road Surigao del Norte
14	11-01-01	Andanan	Km. 1381 + 655 Davao Oriental-Surigao del Sur, Coastal Road Andanan Lianga, Surigao del Sur
15	11-01-02	Pagtilaan	Km. 1505 + 068 Davao Oriental-Surigao del Sur Coastal Road Lingig, Surigao del Sur
16	11-01-03	Quezon T	Km. 1409 + 885 Surigao del Sur-Davao Oriental Coastal Road agbina, Surigao del Sur
17	11-01-04	Pagbakatan	Km. 1482 + 694 Davao Oriental-Surigao del Sur Coastal Road Lingig, Surigao del Sur
18	11-01-05	Union	Km. 1501 + 162 Davao Oriental-Surigao del Sur Coastal Road Lingig, Surigao del Sur
19	11-01-06	Tagasaka	Km. 1439 + 658 Davao Oriental-Surigao del Sur Coastal Road Hinatuan, Surigao del Sur
20	11-03-01	Dao-An	Km. 1632 + 388 Davao Oriental-Surigao del Sur Coastal Road Caraga, Davao Oriental
21	11-03-02	Licop	Km. 1726 + 439 Mati-Compostela-Montevista Road, Lupon Davao Oriental
22	11-03-03	Tawas	Km. 1723 + 920 Mati-Compostela-Montevista Road, Mati Davao Oriental
23	11-03-06	Mahan-Ub	Km. 1649 + 210 Davao Oriental-Surigao del Sur Coastal Road Manay, Davao Oriental
24	11-05-02	Los Amigos	Km. 1689 + 282 Tugbok-Balengaeng Road, Tugbok District Davao City
25	11-05-06	Piedad	Km. 1526 + 780 Toril District-Eden Road, Toril Davao City
26	11-05-07	Lais	Km. 1645 + 160 Davao del Sur-Sarangani Coastal Road Malita, Davao del Sur
27	11-06-02	Baliton	Km. 1717 + 376 Sarangani-Davao del Sur Coastal Road
28	11-06-03	Pangyan	Km. 1733 + 949 Sarangani-Davao del Sur Coastal Road Pangyan, Glan, Sarangani

LIST OF GROUP 2 BRIDGES

No.	Bridge No.	Name of Bridge	Location
1	10-01-08	Lingayao	Km. 1271 + 920 Agusan-Malaybalay Road, Agusan del Norte
2	10-01-09	Magus	Km. 1273+484.22 ~ 1273+524.22 Agusan-Malaybalay Road Agusan del Norte
3	10-01-10	Rizal	Km. 1261+171.89 ~ 1261+231.89 Buenavista-Bunaguit Road, Agusan del Norte
4	10-01-12	Guinabsan	Km. 1263 + 560 Buenavista-Bunaguit Road Agusan del Norte
5	10-02-04	Maog	Km. 1292+650 ~ 1292+713.60 NRJ. Awa-Azpitia-Lianga National Secondary Road, Agusan del Sur
6	10-05-09	Pagatpat-San Simon	Km. 0 + 050 Bulua-Pagatpat-San Simon Road Cagayan de Oro City, Misamis Oriental
7	11-02-05	Lower Silway	Km. 1656 + 032 Gen. Santos City-Makar Wharf Road Gen. Santos City, South Cotabato
8	11-04-03	Inambatan	Km. 1400 + 570 Olaycon-Inambatan-Macopa-Compostela Road, Monkayo, Davao
9	11-05-01	Culaman	Km. 1637 + 000 Davao del Sur-Sarangani Coastal Road Malita, Davao del Sur
10	11-05-03	Mintal	Km. 1696 + 012 Mintal-Calinan Road, Mintal, Davao City

GENERAL VIEW OF BRIDGES

(GROUP 1)

BASIC DESIGN STUDY ON THE PROJECT FOR CONSTRUCTION OF BRIDGES ALONG RURAL ROADS IN MINDANAO AREA		
BRIDGE NO.	BRIDGE NAME	SHEET NO.
10-01-01	TAG-ANAHAO	1

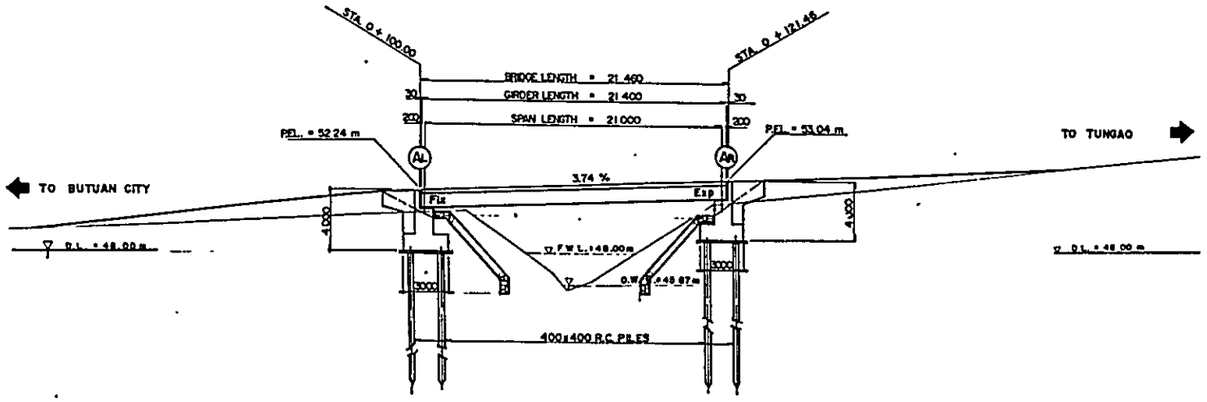

GENERAL ELEVATION
SCALE 1 : 200 M

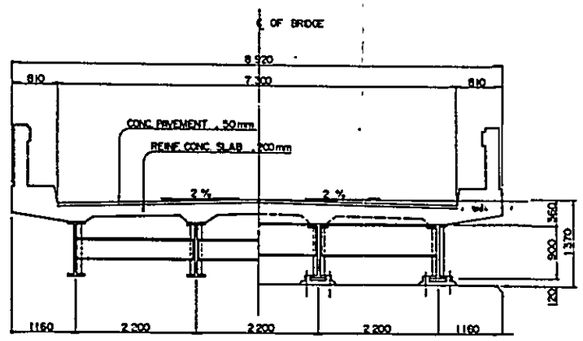

SUPERSTRUCTURE CROSS SECTION
SCALE 1 : 50 M

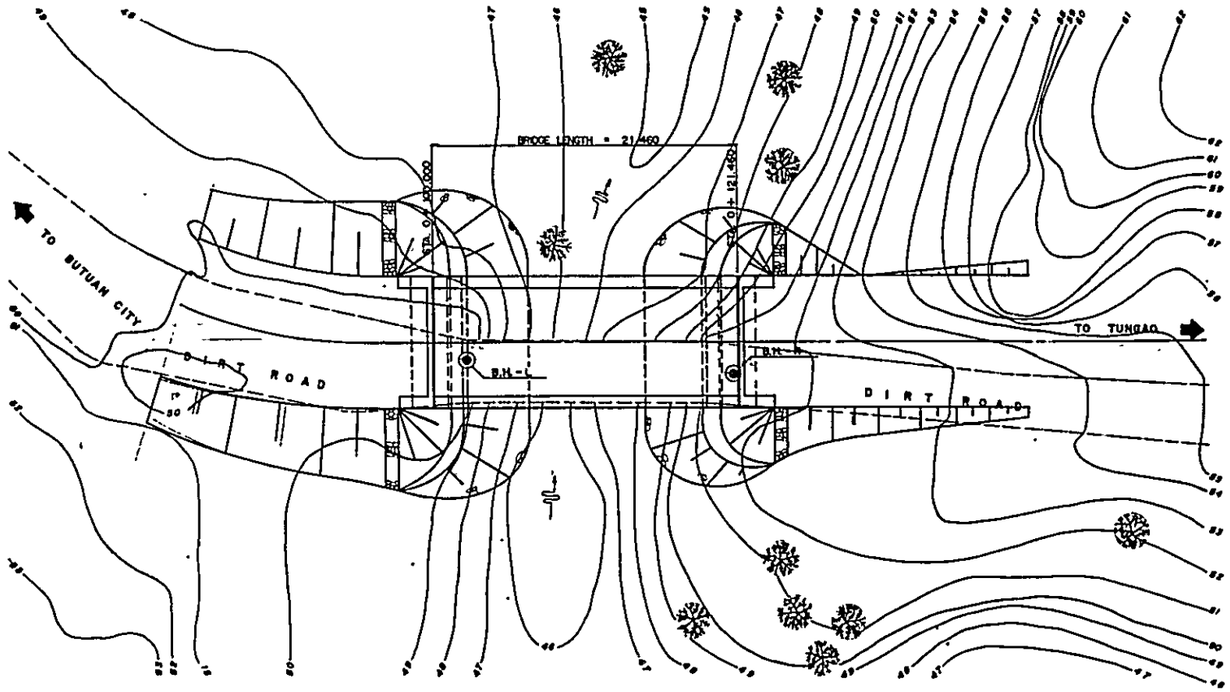

GENERAL PLAN
SCALE 1 : 200 M

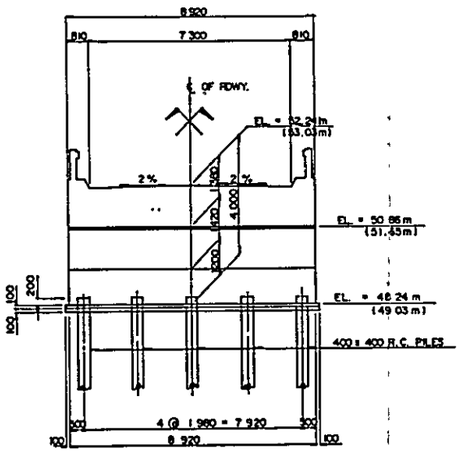

ABUTMENT (AL) & (AR)
SCALE 1 : 100 M

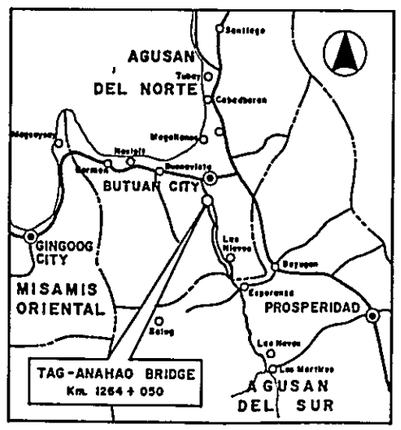

VICINITY MAP

FOR CONSTRUCTIO	
BRIDGE NO.	
10-02-01	

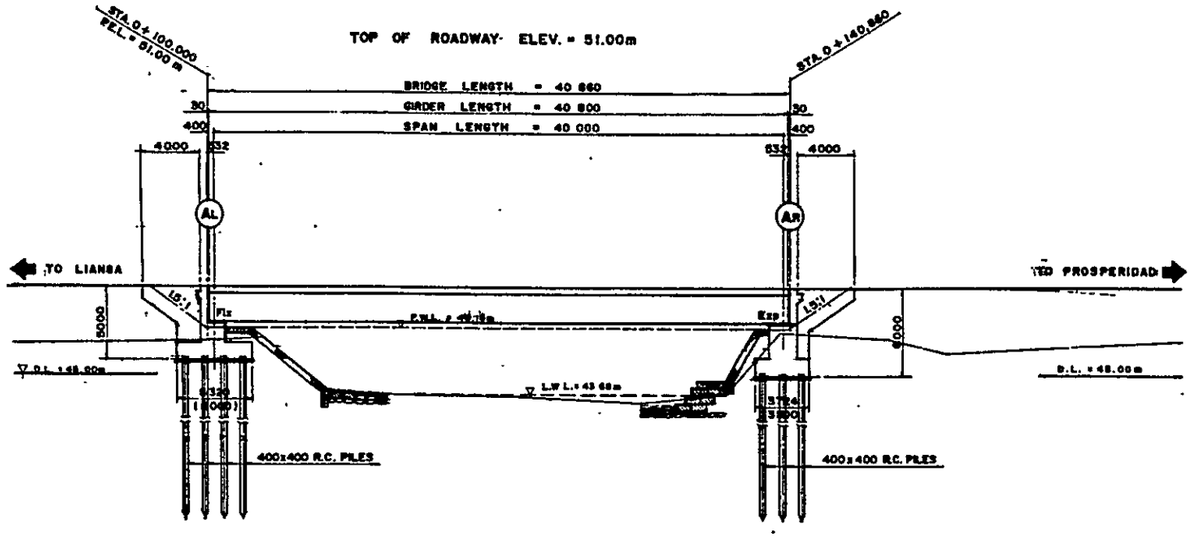

GENERAL ELEVATION
SCALE 1:200 M

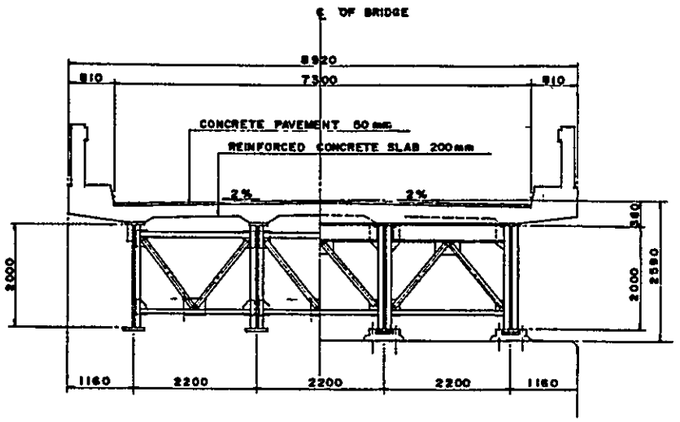

SUPERSTRUCTURE CROSS SECTION
SCALE 1:80 M.

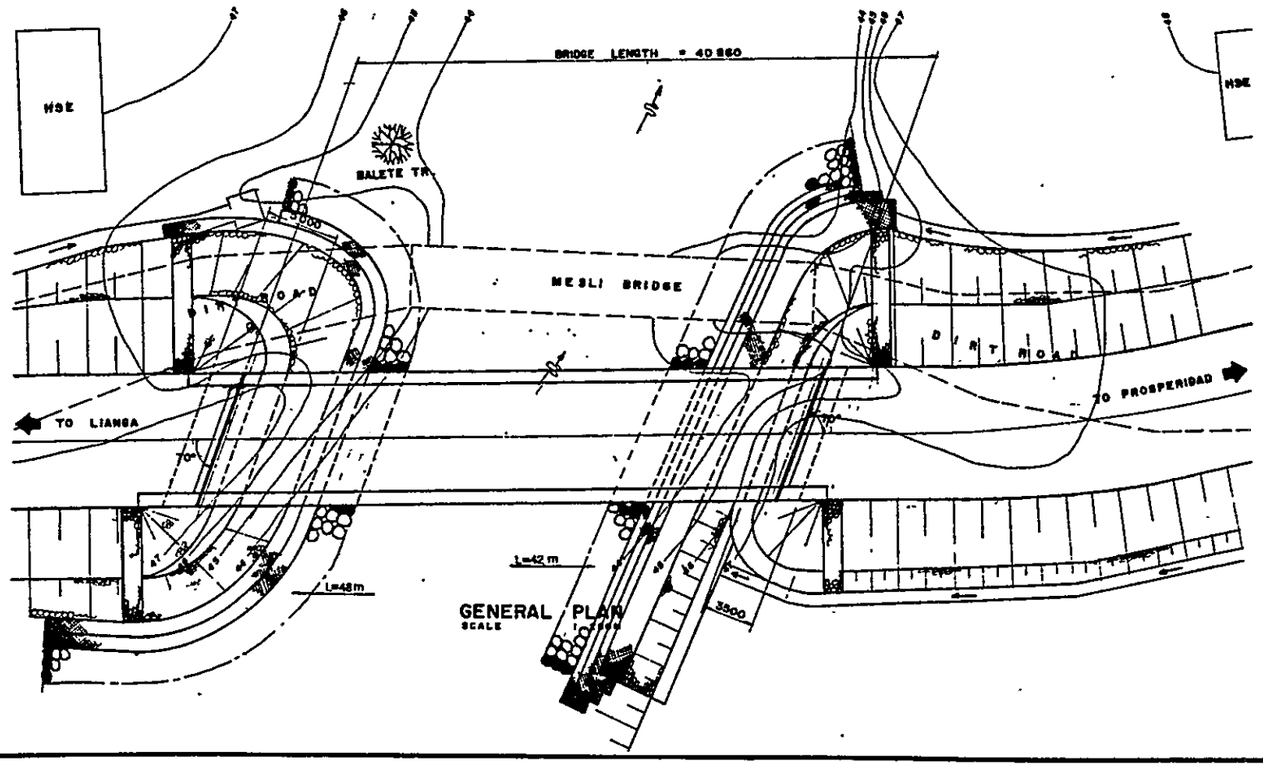

GENERAL PLAN
SCALE 1:1000 M

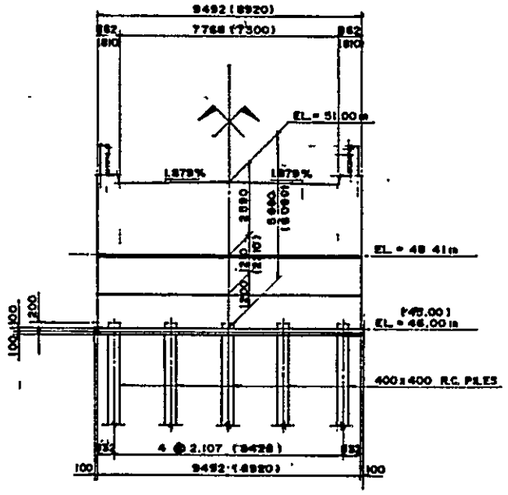

ABUTMENT AL & AR
SCALE 1:100 M

BASIC DESIGN STUDY ON THE PROJECT FOR CONSTRUCTION OF BRIDGES ALONG RURAL ROADS IN MINDANAO AREA		
BRIDGE NO.	BRIDGE NAME	SHEET NO.
10-02-01	Mesli	2

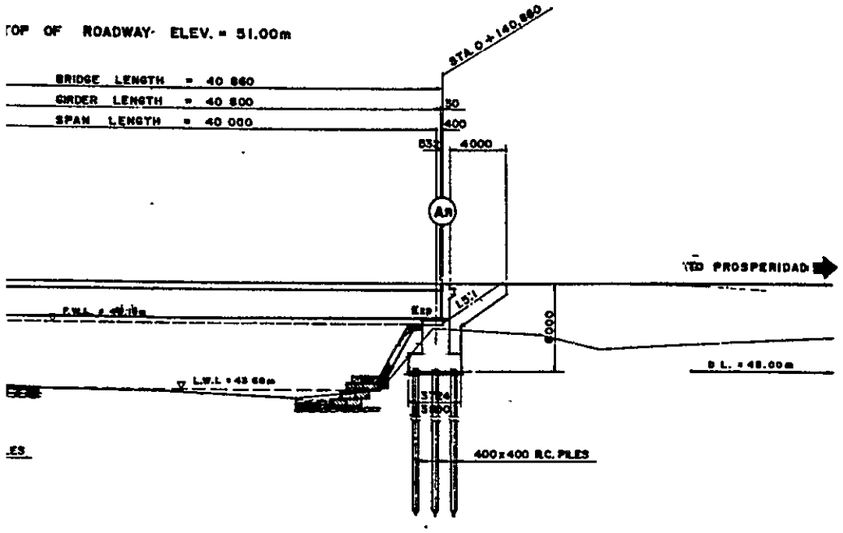

GENERAL ELEVATION
SCALE 1:200 M

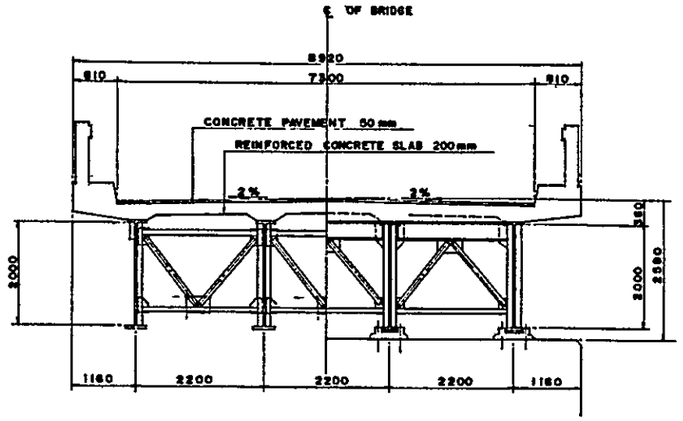

SUPERSTRUCTURE CROSS SECTION
SCALE 1:50 M.

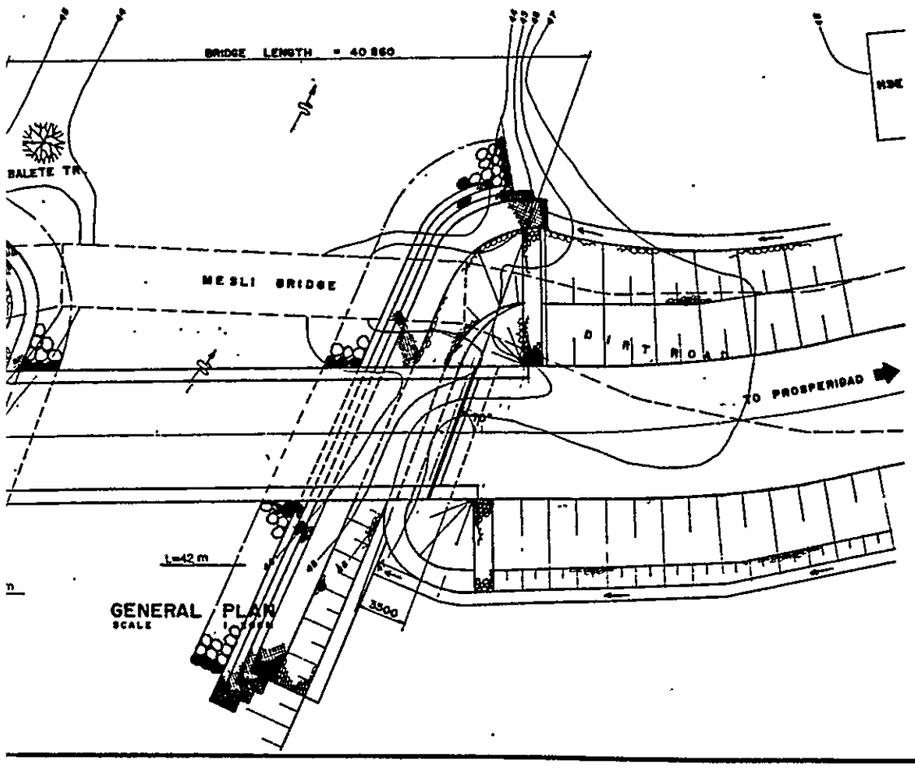

GENERAL PLAN
SCALE

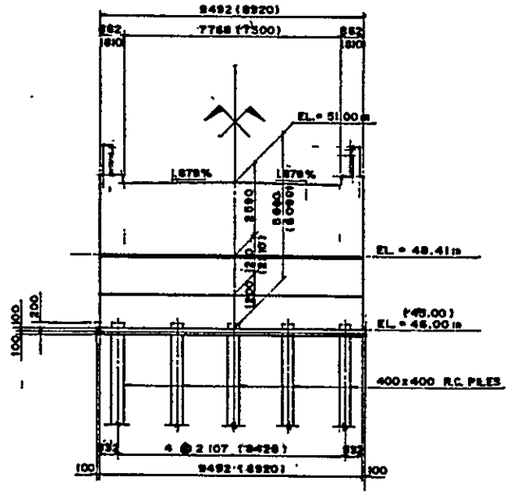

ABUTMENT AL & AR
SCALE 1:100 M

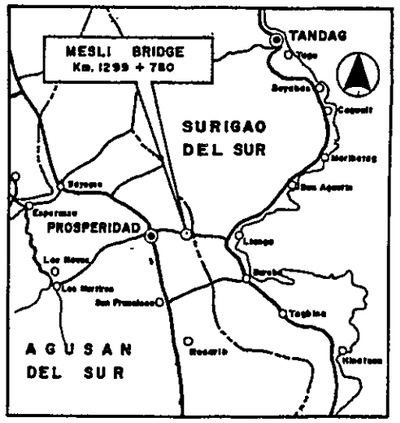

VICINITY MAP

BASIC DESIGN STUDY ON THE PROJECT FOR CONSTRUCTION OF BRIDGES ALONG RURAL ROADS IN MINDANAO AREA		
BRIDGE NO.	BRIDGE NAME	SHEET NO.
10-02-03	ANIBONGAN	3

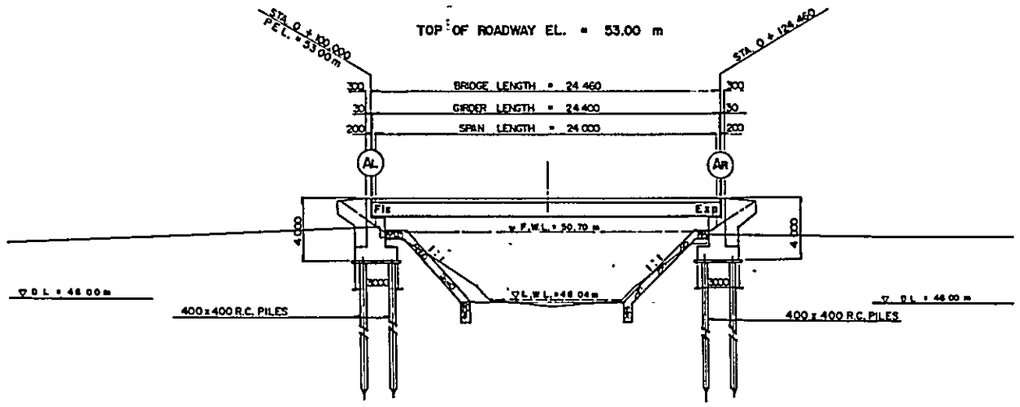

GENERAL ELEVATION
SCALE 1 : 200 M

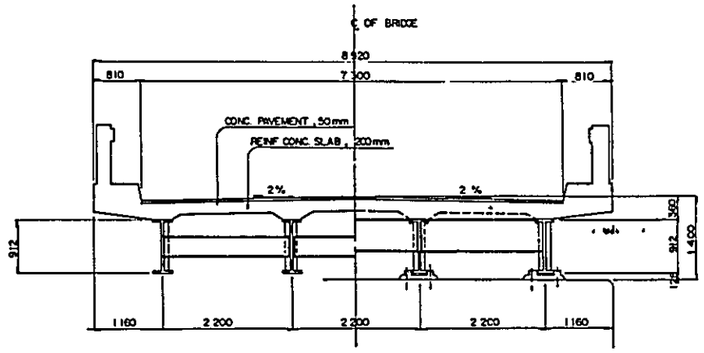

SUPERSTRUCTURE CROSS SECTION
SCALE 1 : 50 M

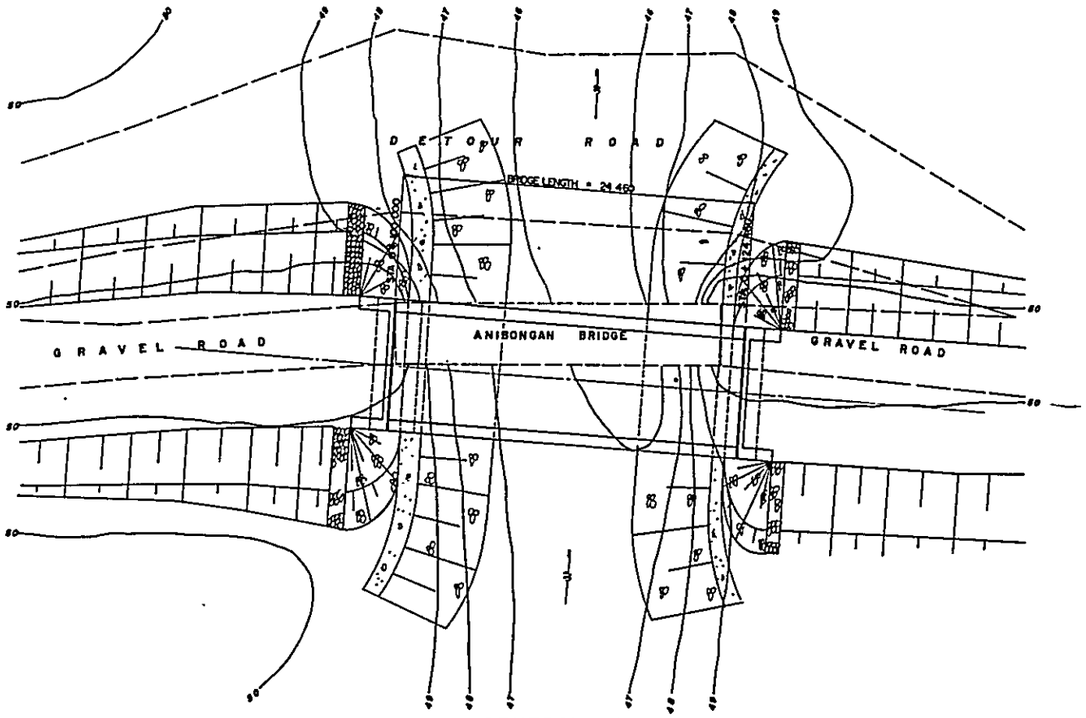

GENERAL PLAN
SCALE 1 : 200 M.

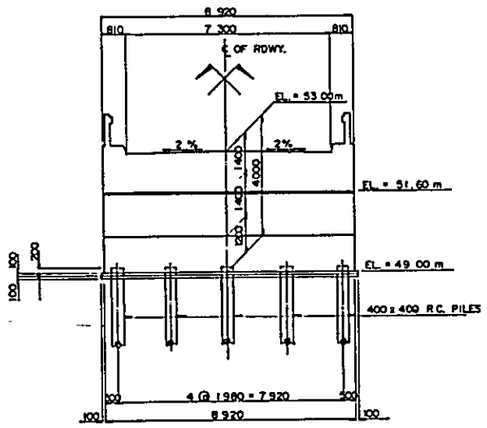

ABUTMENT (AL) & (AR)
SCALE 1 : 100 M

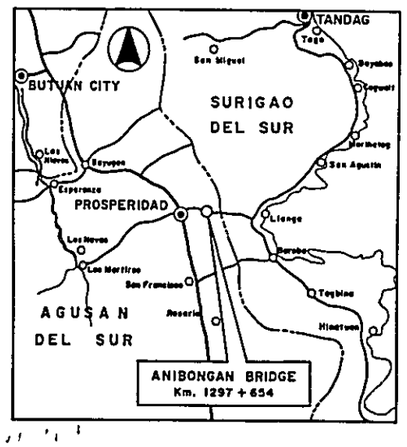

VICINITY MAP

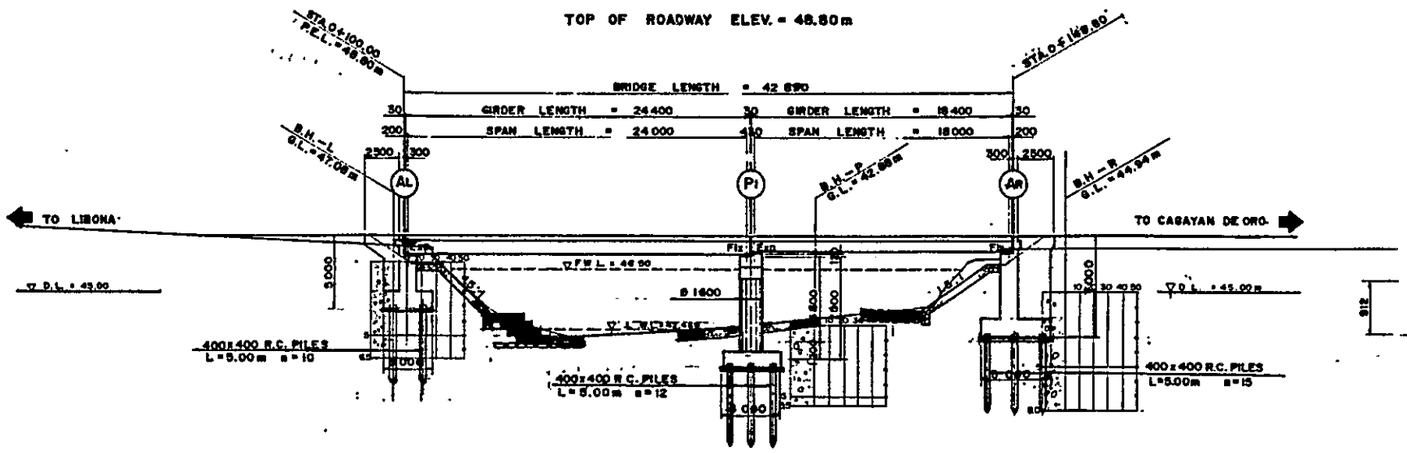

GENERAL ELEVATION
SCALE 1 : 200 M

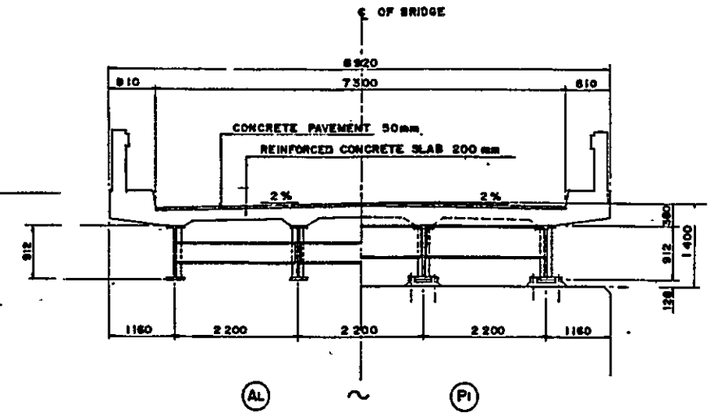

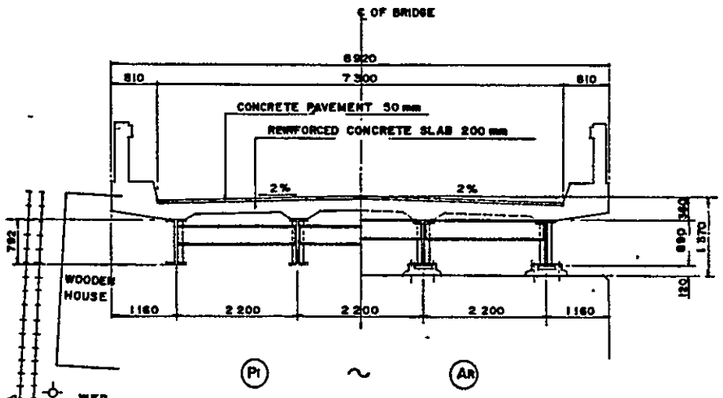

SUPERSTRUCTURE CROSS SECTION
SCALE 1 : 50 M

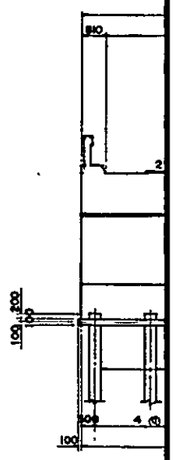

ABUTM
SCALE

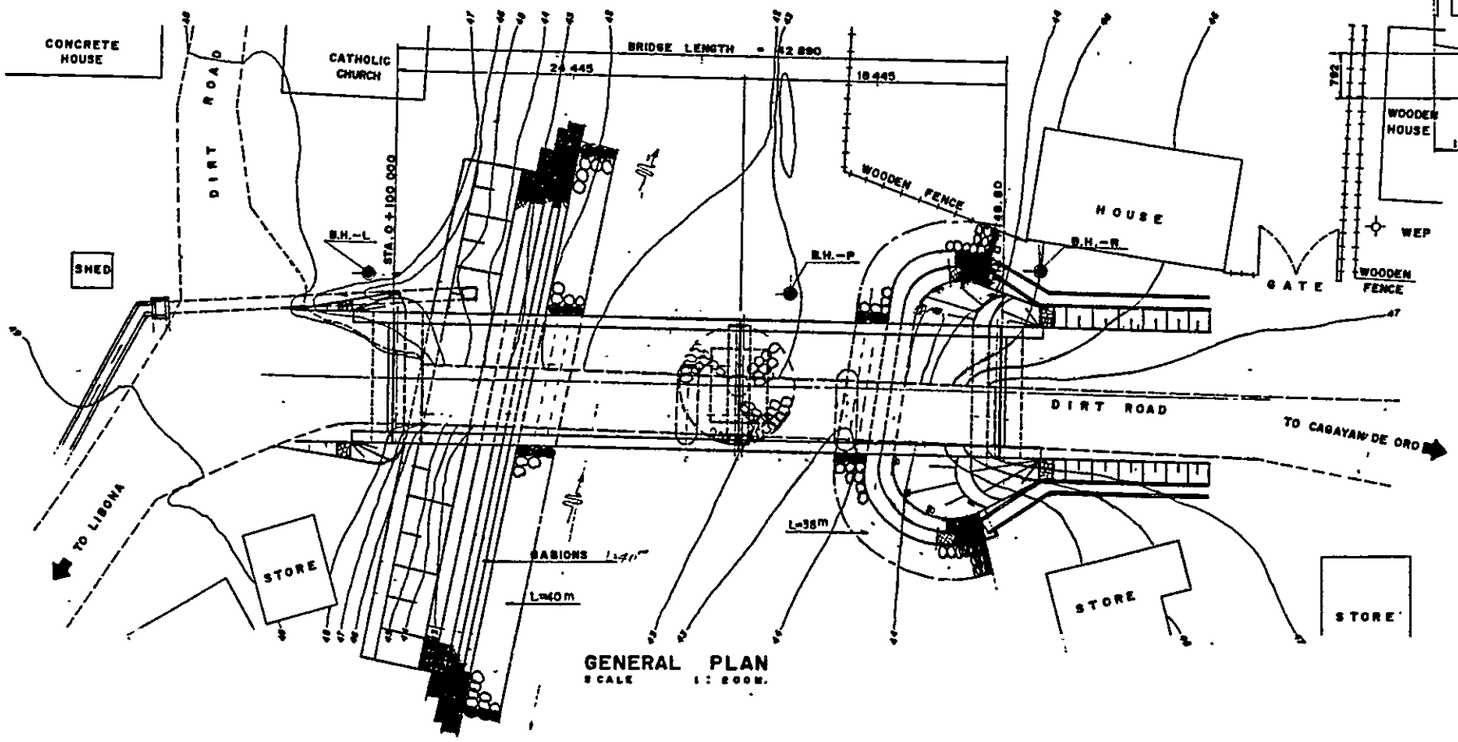

GENERAL PLAN
SCALE 1 : 200M.

BASIC DESIGN STUDY ON THE PROJECT FOR CONSTRUCTION OF BRIDGES ALONG RURAL ROADS IN MINDANAO AREA		
BRIDGE NO.	BRIDGE NAME	SHEET NO.
10-03-03	Agusan Canyon	4

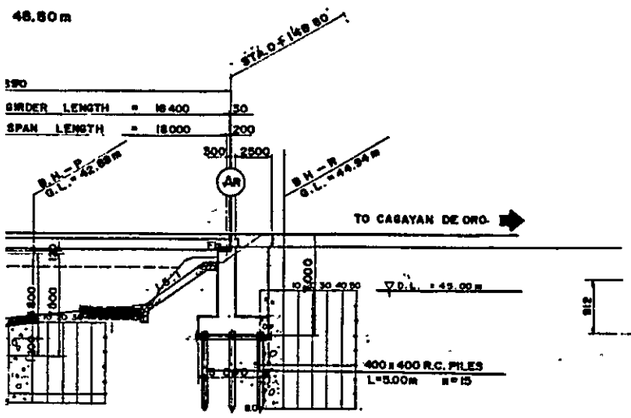

ATION
: 200 M

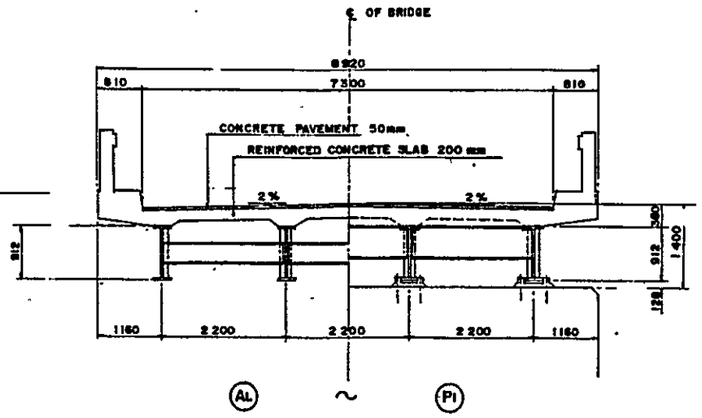

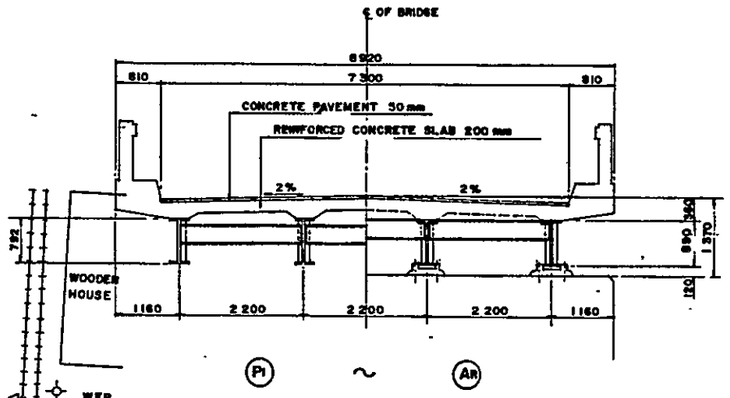

SUPERSTRUCTURE CROSS SECTION
SCALE 1 : 50 M

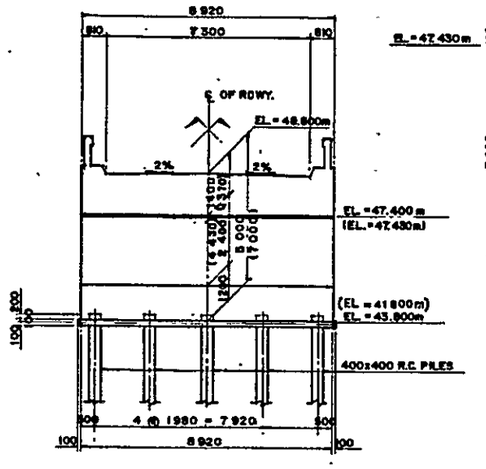

ABUTMENT (AL) & (AR)
SCALE 1 : 100 M

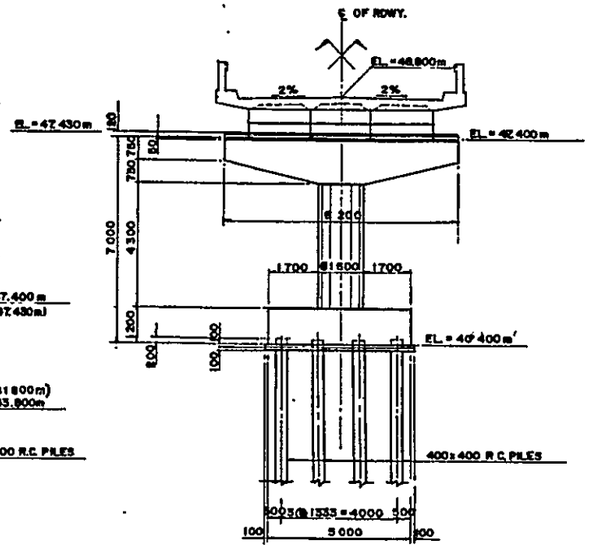

PIER (PI)
SCALE 1 : 100 M

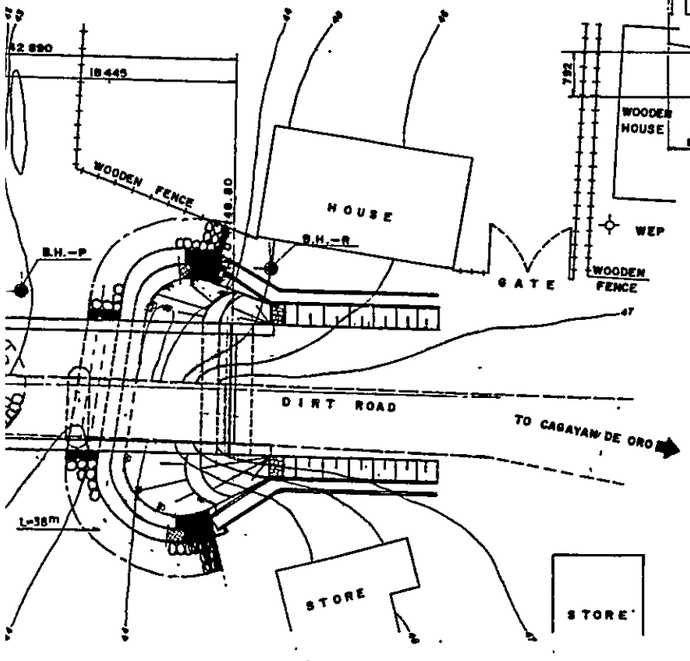

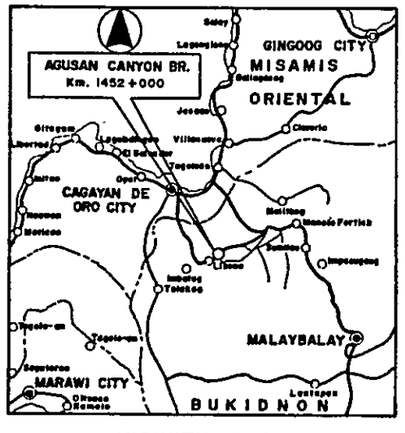

VICINITY MAP

BASIC DESIGN STUDY ON THE PROJECT FOR CONSTRUCTION OF BRIDGES ALONG RURAL ROADS IN MINDANAO AREA		
BRIDGE NO.	BRIDGE NAME	SHEET NO.
10-03-06	AGLAYAN	5

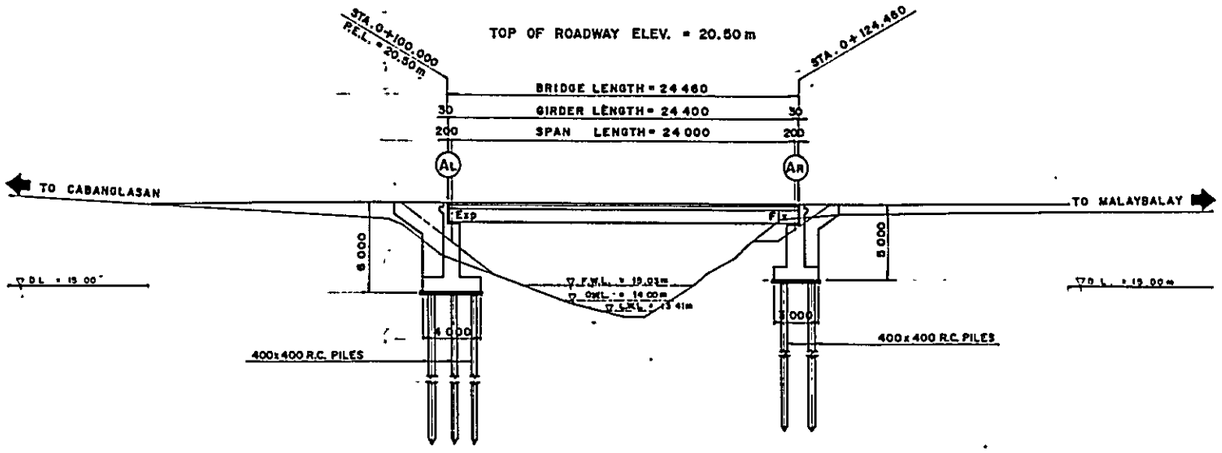

GENERAL ELEVATION
SCALE 1 : 200 M

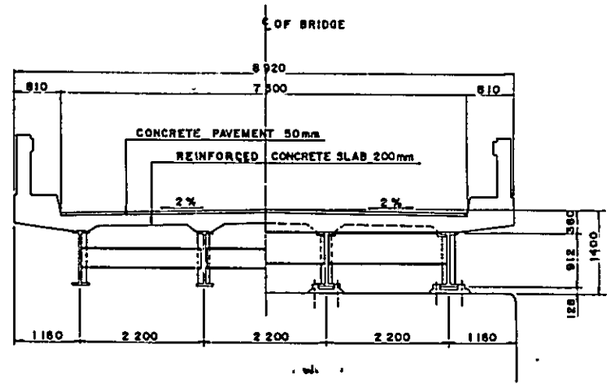

SUPERSTRUCTURE CROSS SECTION
SCALE 1 : 50 M

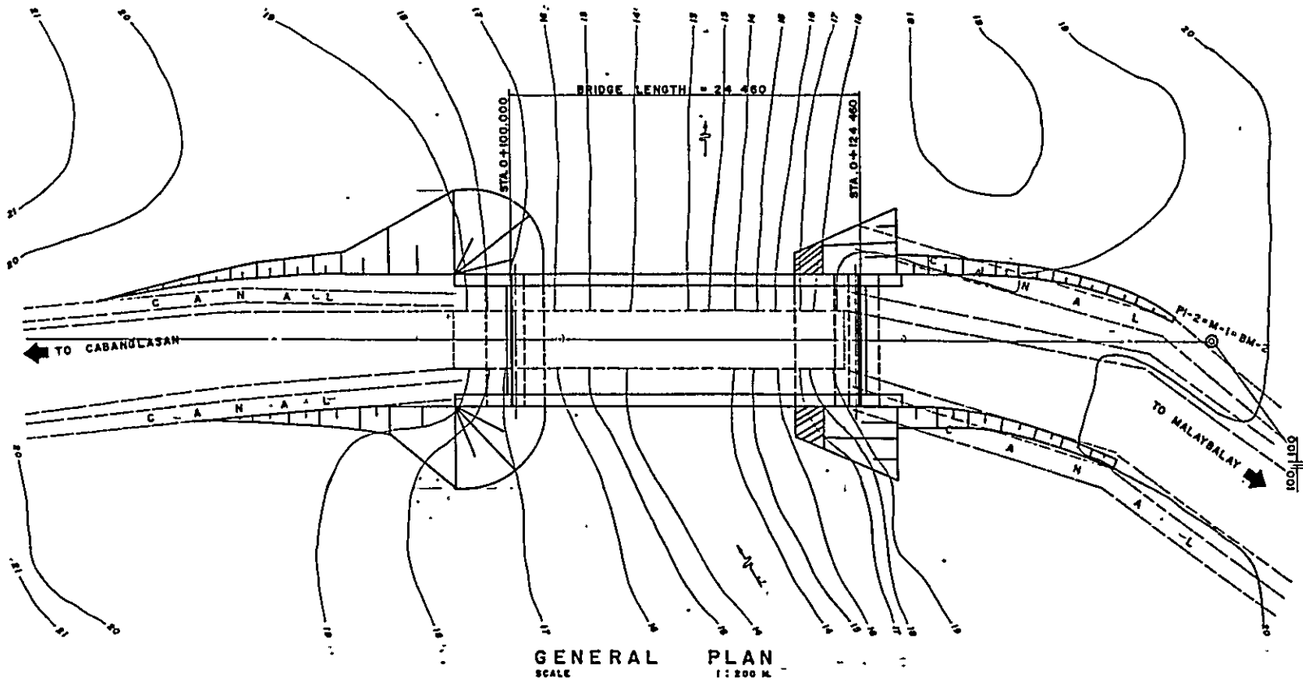

GENERAL PLAN
SCALE 1 : 200 M

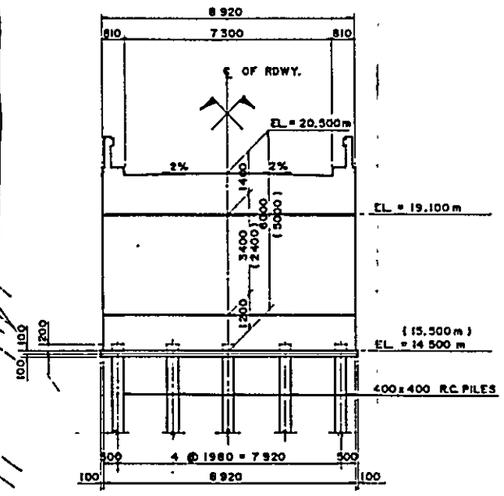

ABUTMENT (AR) & (AL)
SCALE 1 : 100 M

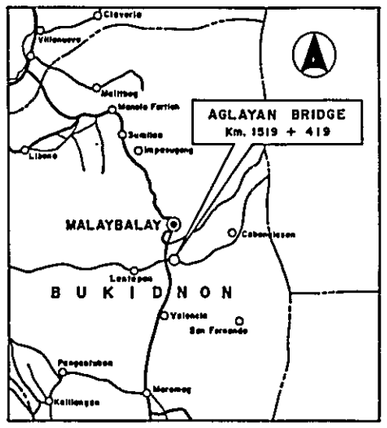

VICINITY MAP

BASIC DESIGN STUDY ON THE PROJECT FOR CONSTRUCTION OF BRIDGES ALONG RURAL ROADS IN MINDANAO AREA		
BRIDGE NO.	BRIDGE NAME	SHEET NO.
10-03-09	SILAE	6

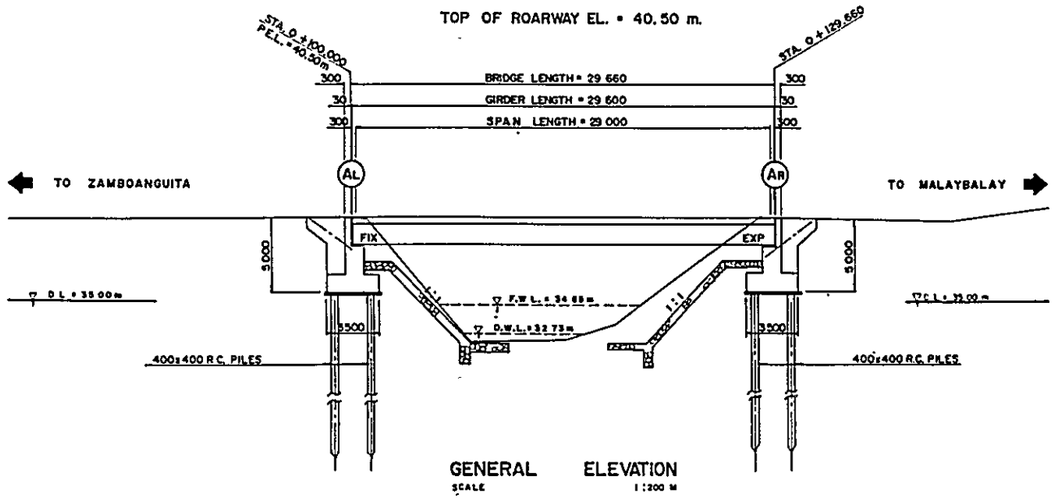

GENERAL ELEVATION
SCALE 1:200 M

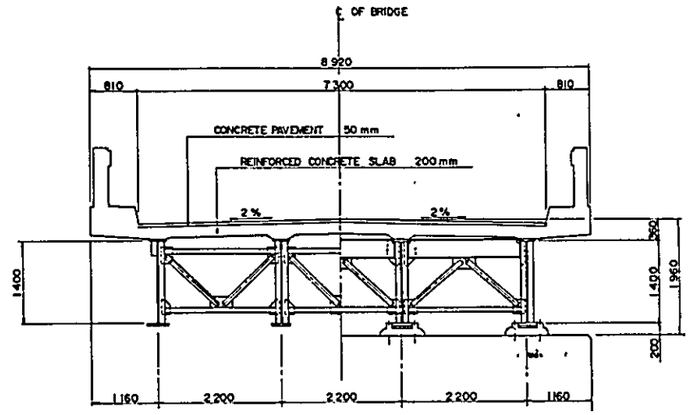

SUPERSTRUCTURE CROSS SECTION
SCALE 1 : 50 M

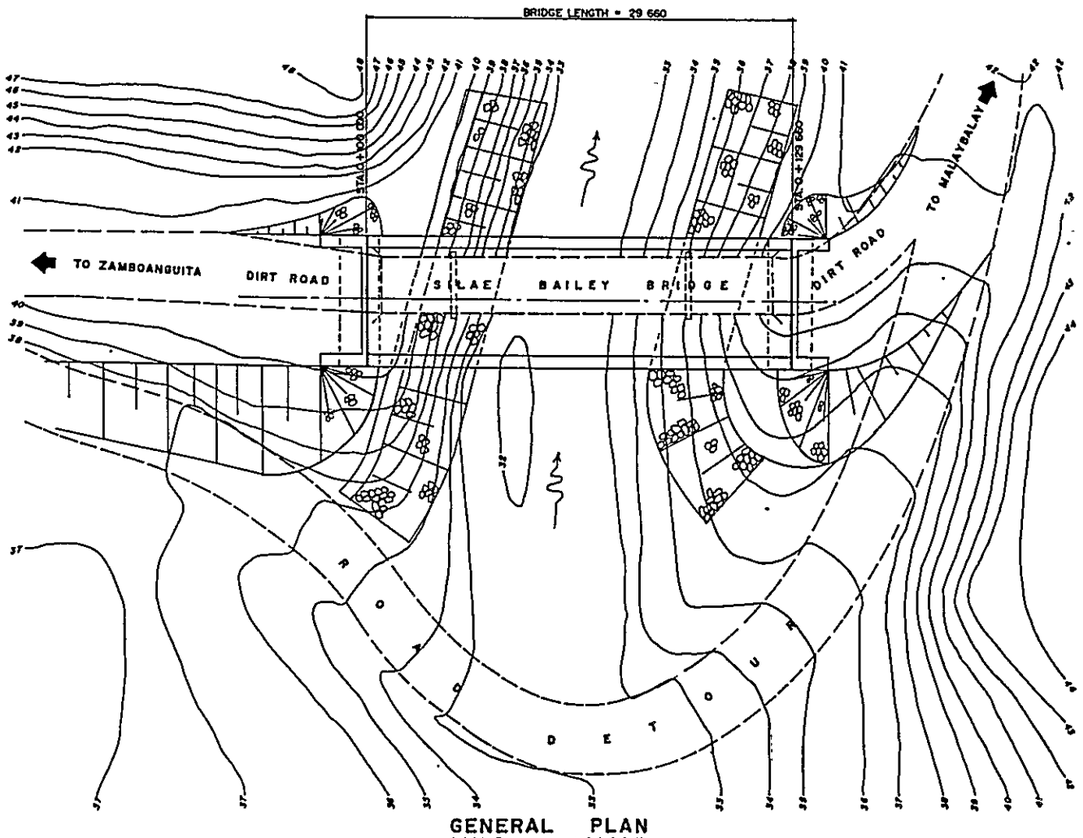

GENERAL PLAN
SCALE 1:800 M.

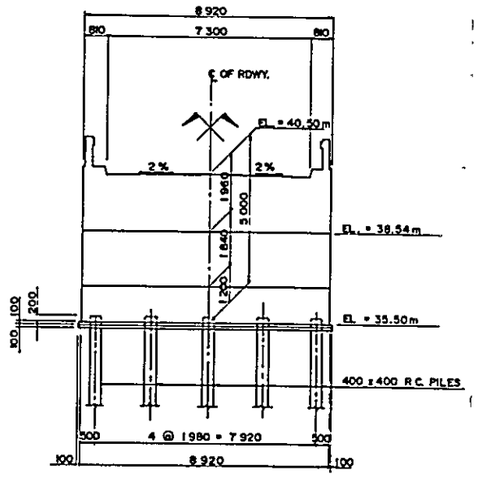

ABUTMENT (AL) & (AR)
SCALE 1 : 100 M

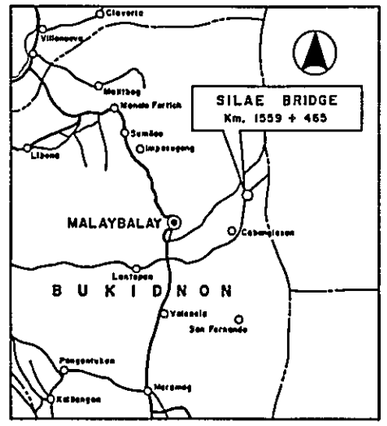

VICINITY MAP

BASIC DESIGN STUDY ON THE PROJECT FOR CONSTRUCTION OF BRIDGES ALONG RURAL ROADS IN MINDANAO AREA		
BRIDGE NO.	BRIDGE NAME	SHEET NO.
10-04-03	TIPALAC BRIDGE	7

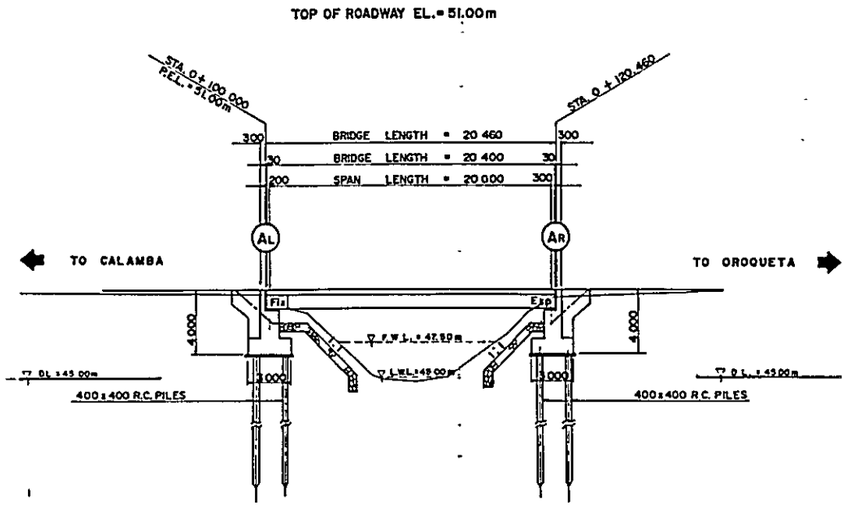

GENERAL ELEVATION
SCALE 1:200

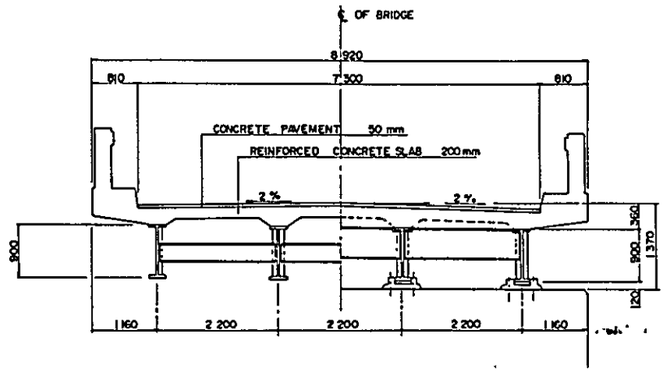

SUPERSTRUCTURE CROSS SECTION
SCALE 1:50 M

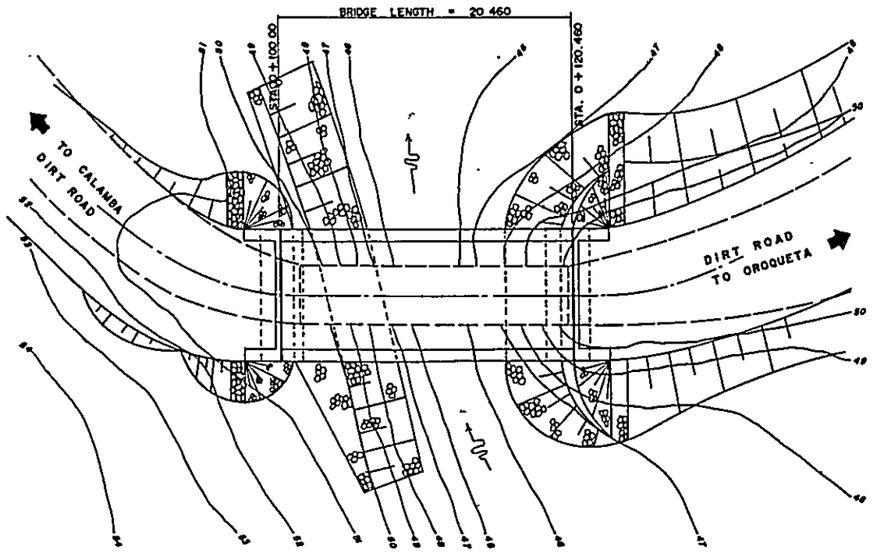

GENERAL PLAN
SCALE 1:200 M.

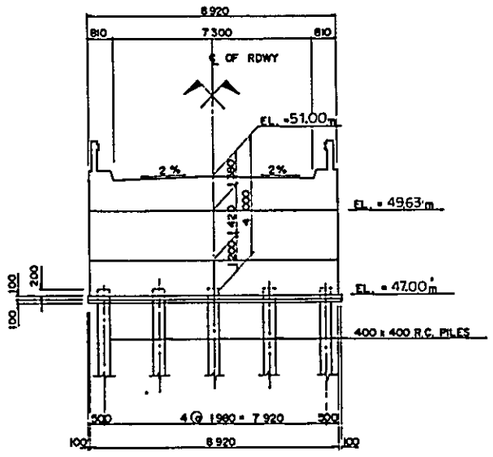

ABUTMENT (AR) & (AL)
SCALE 1:100 M

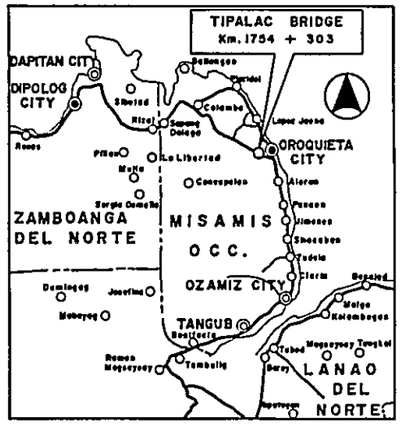

VICINITY MAP

BASIC DESIGN STUDY ON THE PROJECT FOR CONSTRUCTION OF BRIDGES ALONG RURAL ROADS IN MINDANAO AREA		
BRIDGE NO.	BRIDGE NAME	SHEET NO.
10-04-04	TIPAN DIUT	8

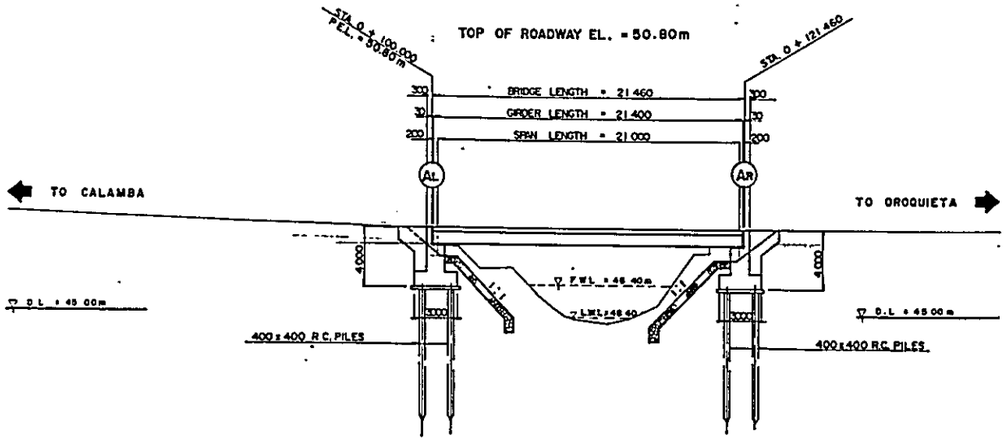

GENERAL ELEVATION
SCALE 1:300 M

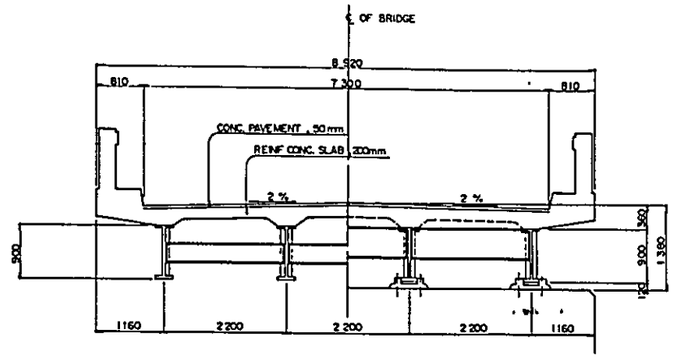

SUPERSTRUCTURE CROSS SECTION
SCALE 1:50 M

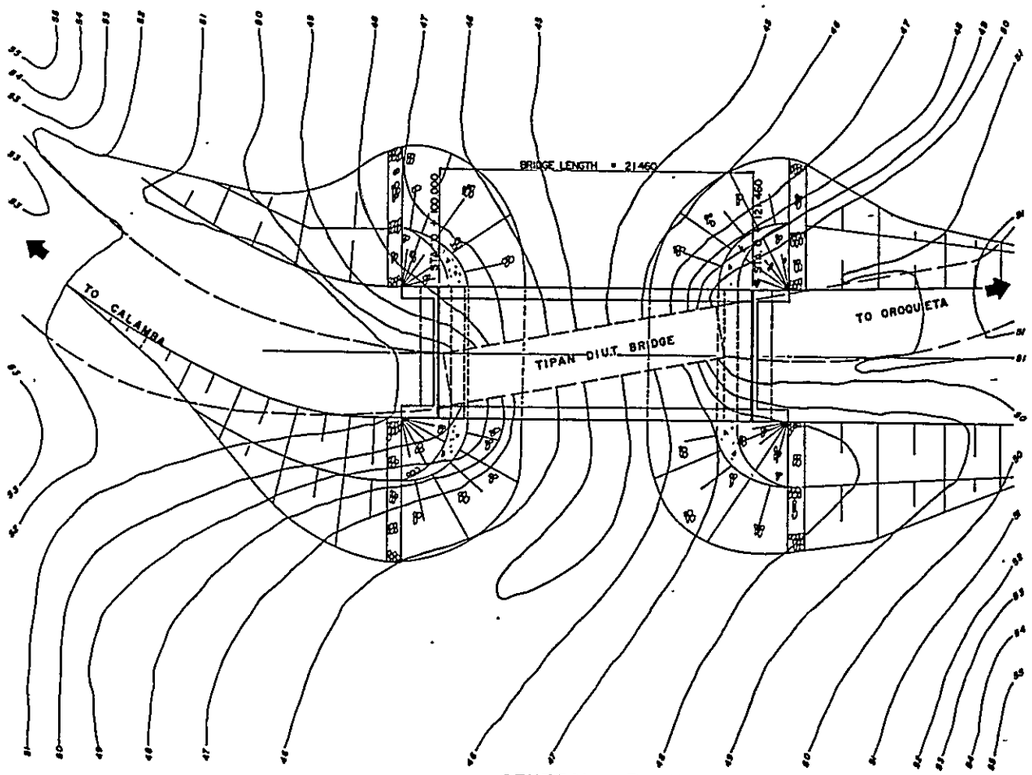

GENERAL PLAN
SCALE 1:2000M.

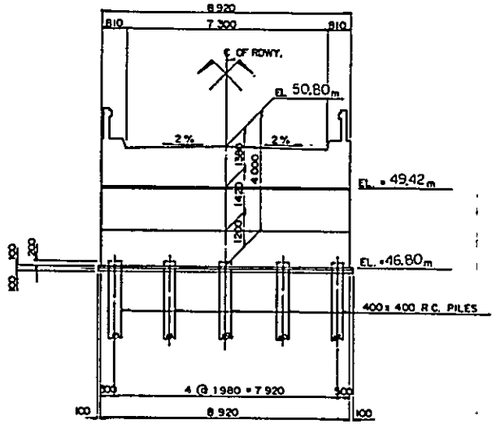

ABUTMENT (AL) & (AR)
SCALE 1:100 M

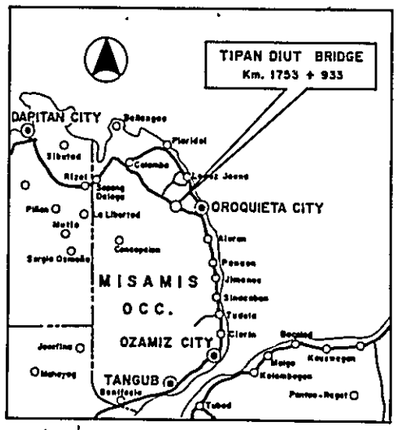

VICINITY MAP

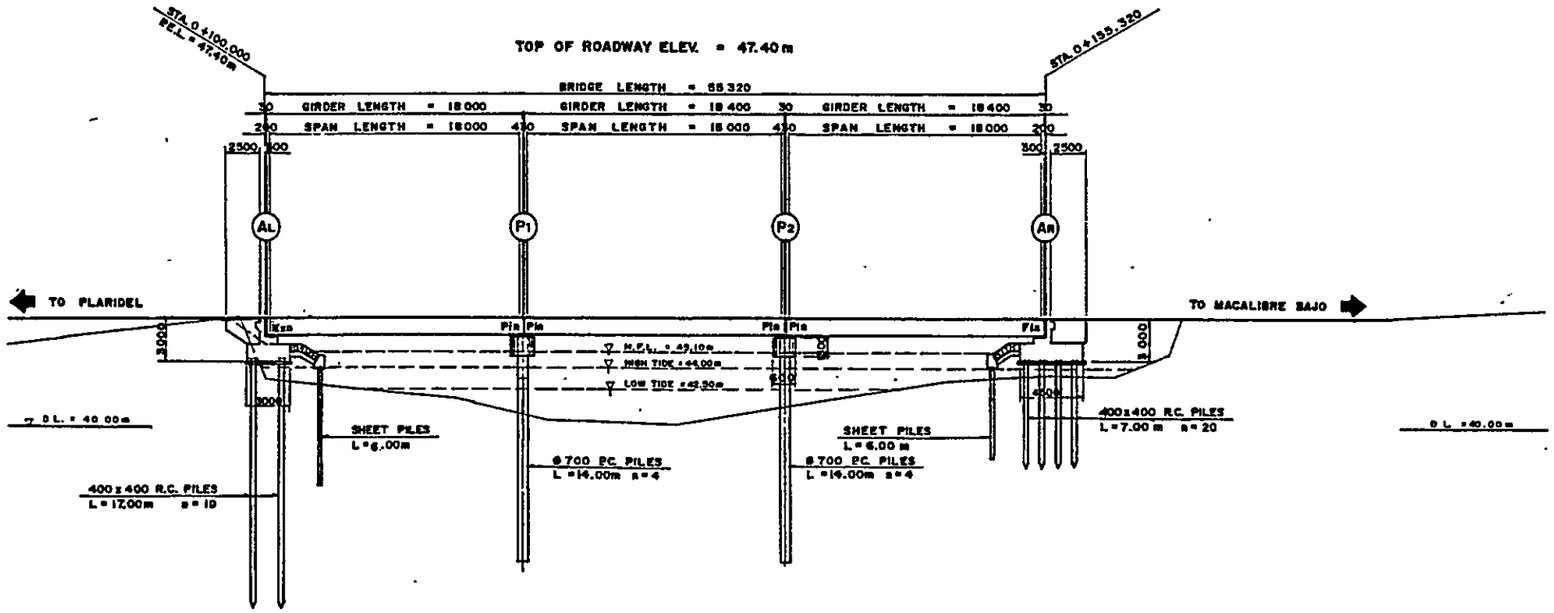

GENERAL ELEVATION
SCALE 1:200 M

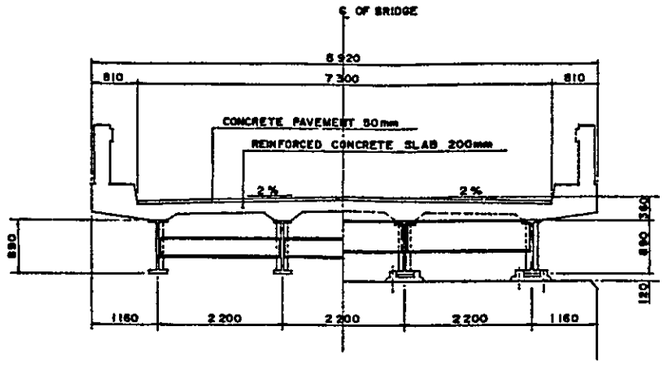

SUPERSTRUCTURE CROSS SECTION
SCALE 1:50 M

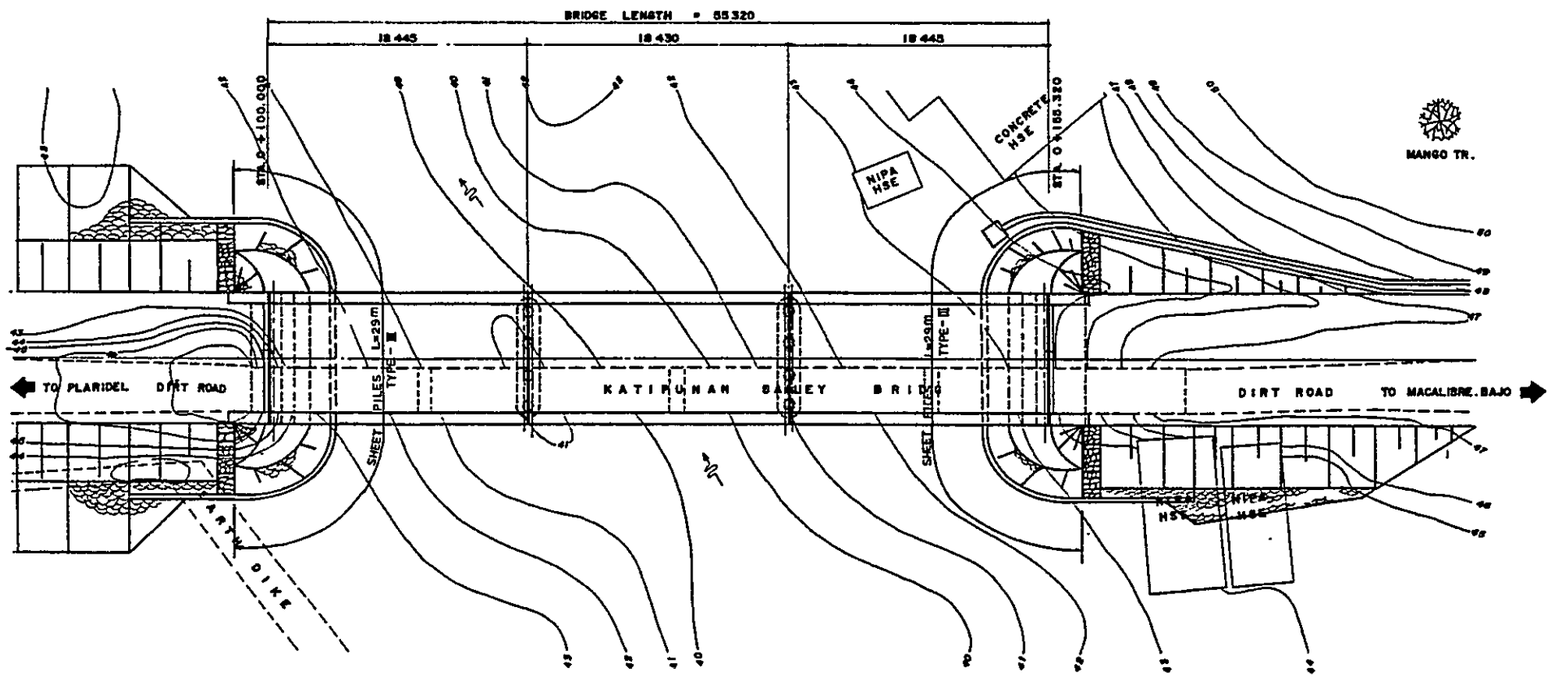

GENERAL PLAN
SCALE 1:200 M

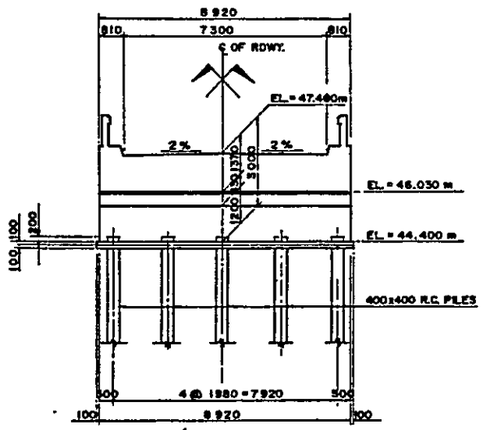

ABUTMENT (AL) & (AR)
SCALE 1:100 M

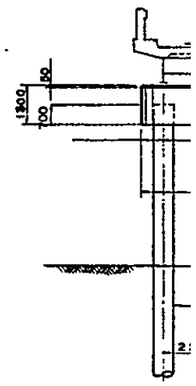

PIE
SCAL

BASIC DESIGN STUDY ON THE PROJECT FOR CONSTRUCTION OF BRIDGES ALONG RURAL ROADS IN MINDANAO AREA		
BRIDGE NO.	BRIDGE NAME	SHEET NO.
10-04-10	KATIPUNAN	9

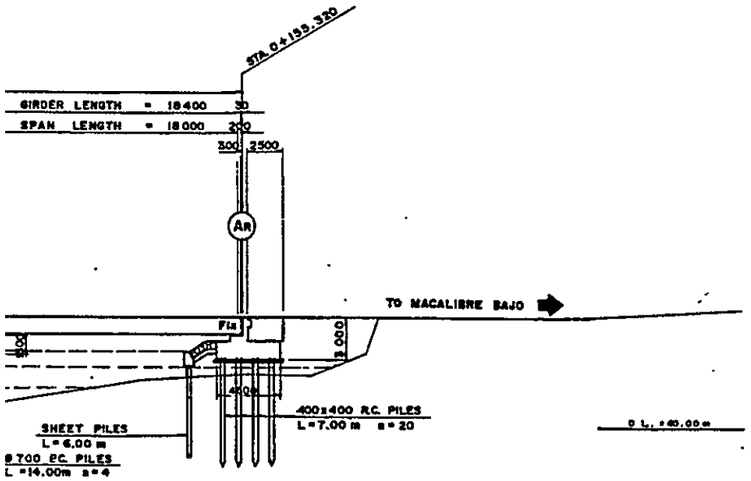

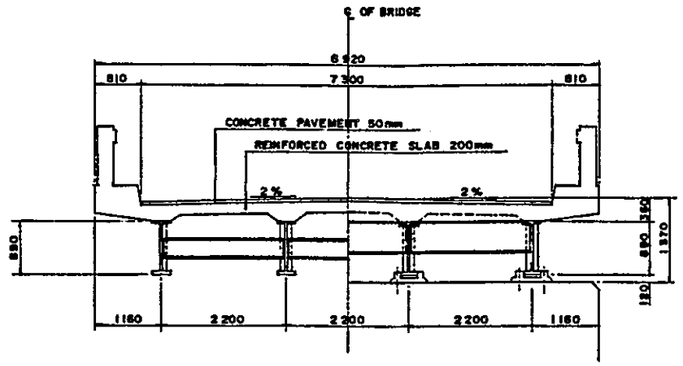

SUPERSTRUCTURE CROSS SECTION
SCALE 1:50 m

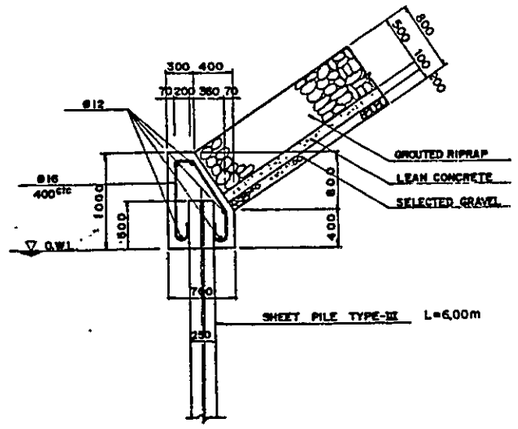

CAPING OF SHEET PILES
SCALE 1 : 50 m

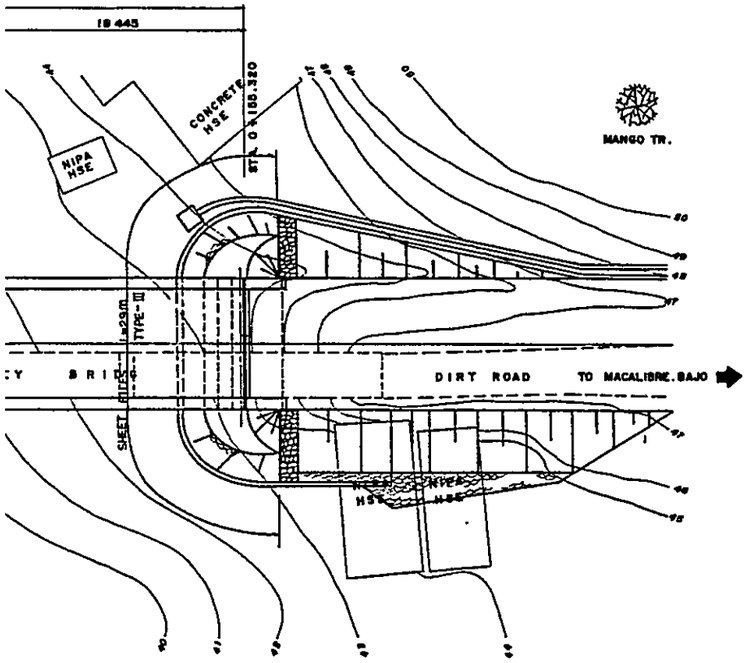

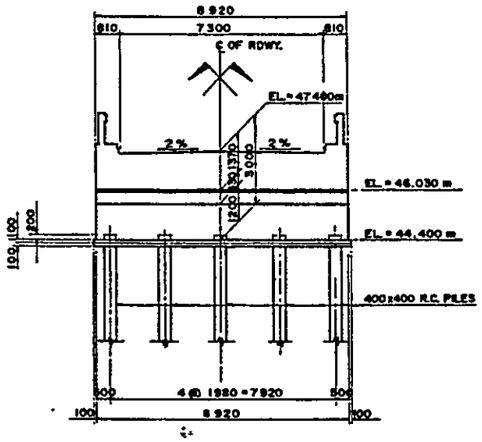

ABUTMENT (AL) & (AR)
SCALE 1:100 m

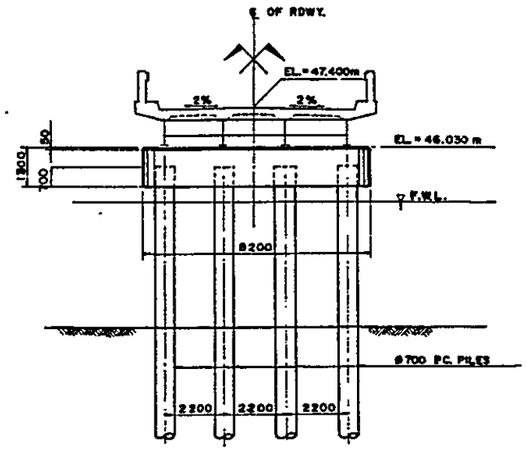

PIER (P1) & (P2)
SCALE 1:100 m

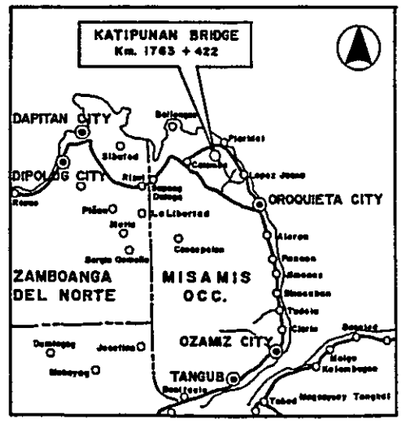

VICINITY MAP

BASIC DESIGN STUDY ON THE PROJECT FOR CONSTRUCTION OF BRIDGES ALONG RURAL ROADS IN MINDANAO AREA		
BRIDGE NO.	BRIDGE NAME	SHEET NO.
10-06-01	HAYANGABON II	10

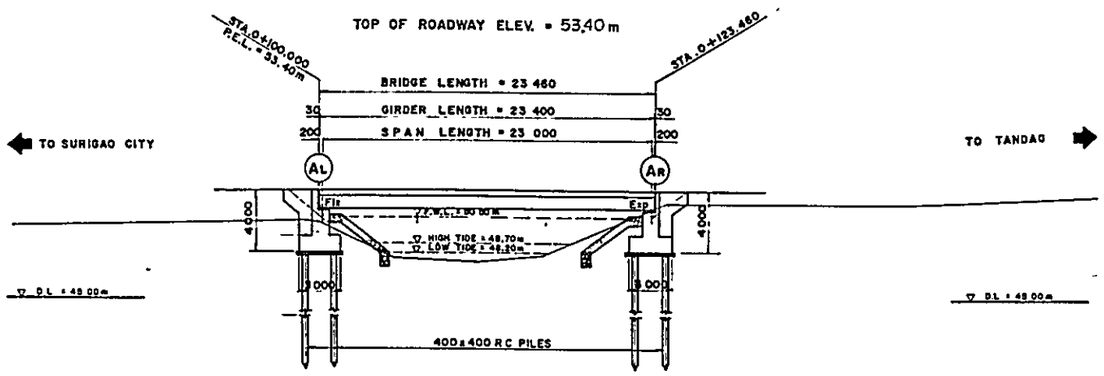

GENERAL ELEVATION
SCALE 1 : 200 M

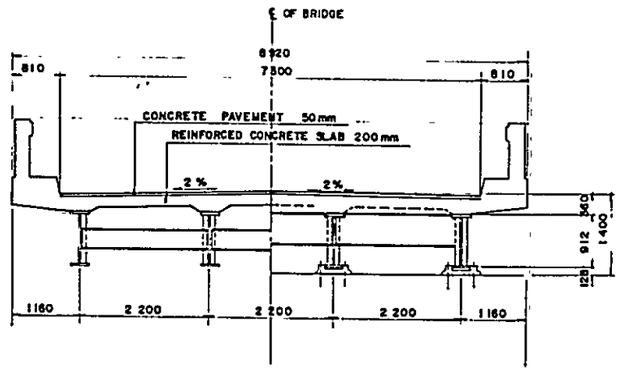

SUPERSTRUCTURE CROSS SECTION
SCALE 1 : 50 M

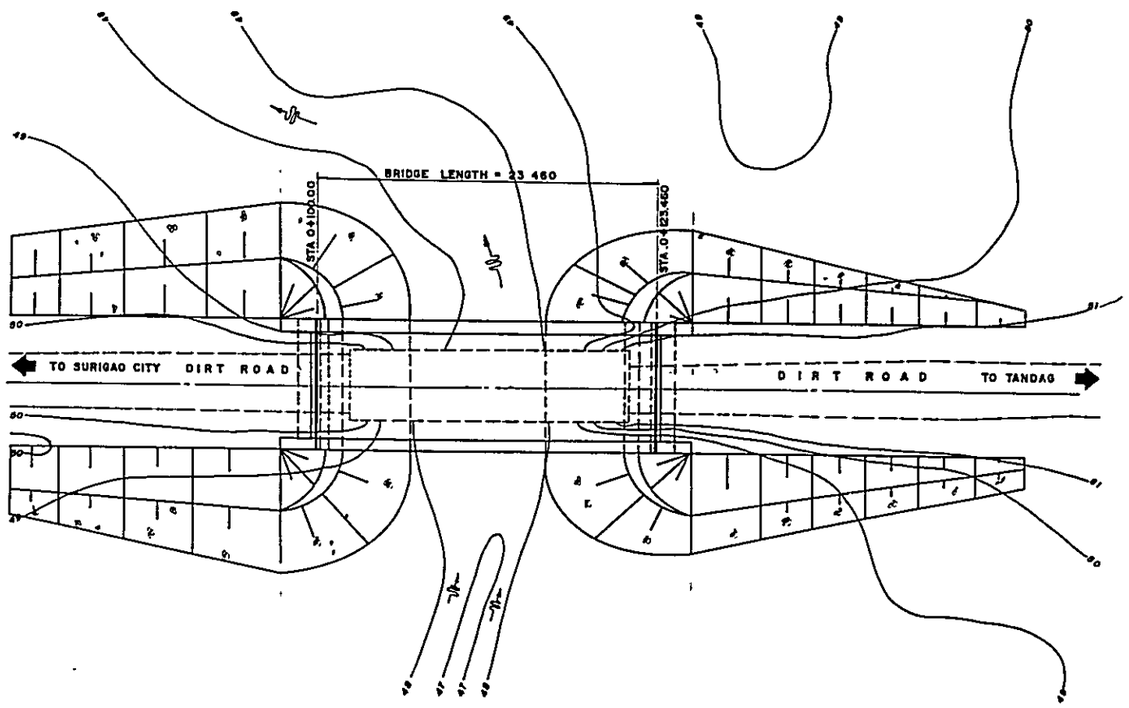

GENERAL PLAN
SCALE 1 : 200 M

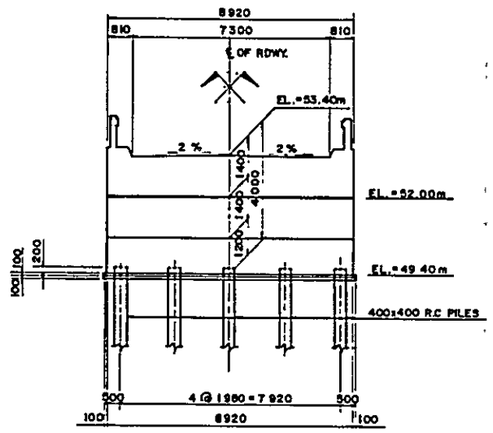

ABUTMENT AL & AR
SCALE 1 : 100 M

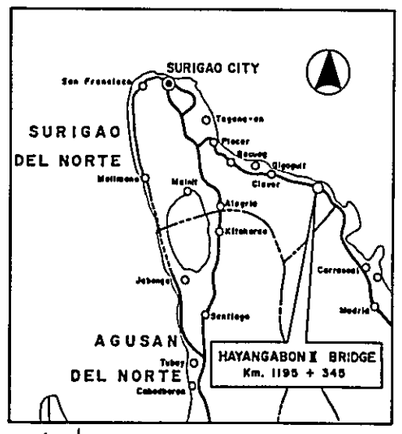

VICINITY MAP

BASIC DESIGN STUDY ON THE PROJECT FOR CONSTRUCTION OF BRIDGES ALONG RURAL ROADS IN MINDANAO AREA		
BRIDGE NO.	BRIDGE NAME	SHEET NO.
10-06-02	Capandan	11

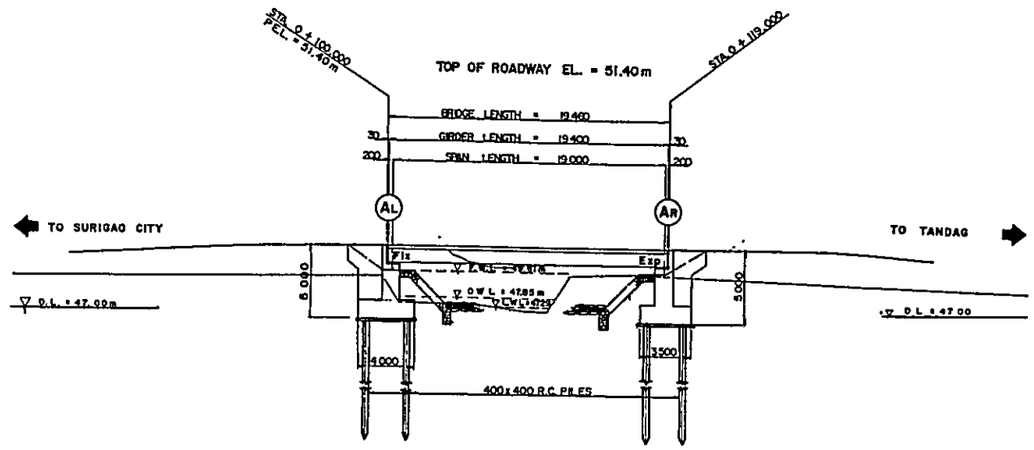

GENERAL ELEVATION
SCALE 1:200 M

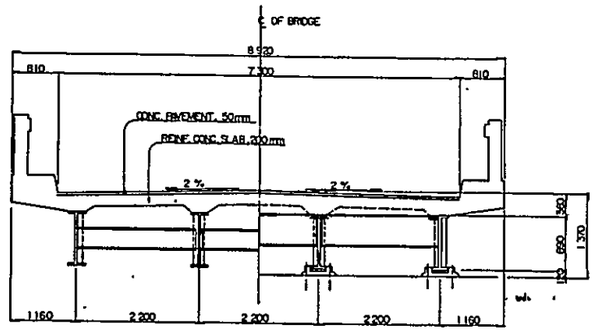

SUPERSTRUCTURE CROSS SECTION
SCALE 1:50 M

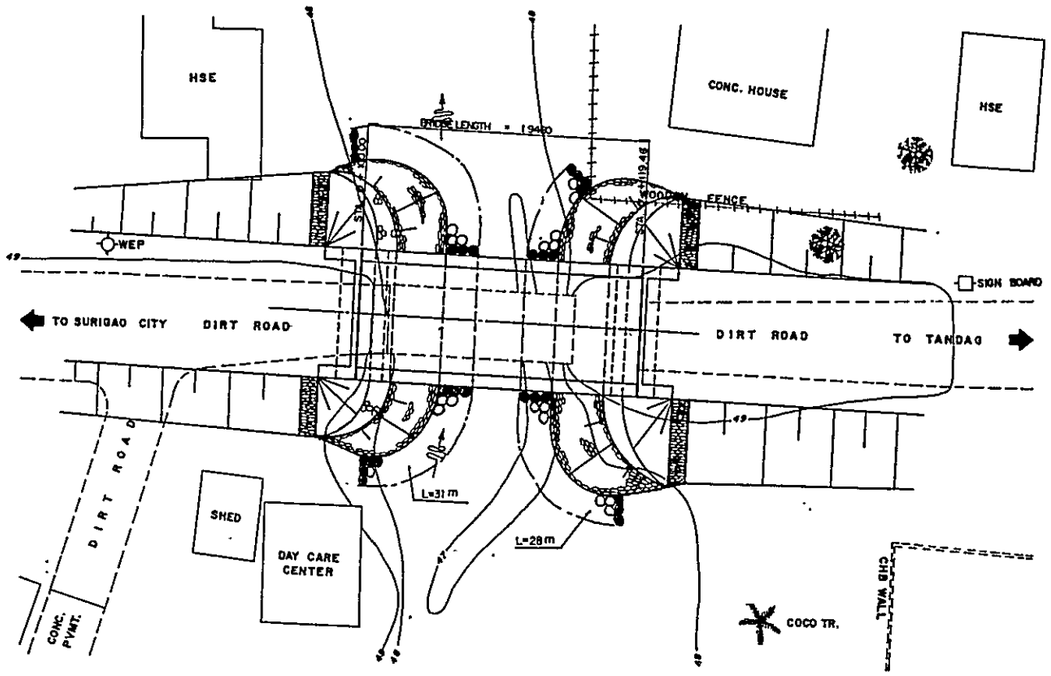

GENERAL PLAN
SCALE 1:200M

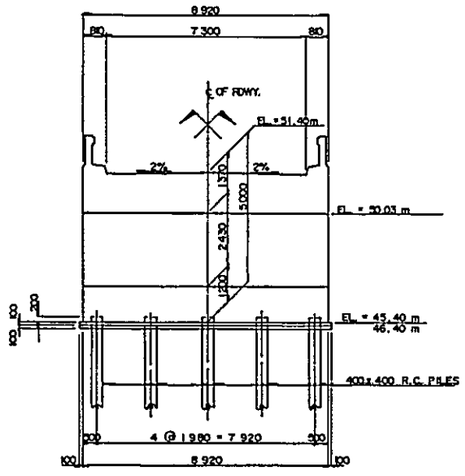

ABUTMENT (AL) & (AR)
SCALE 1:100 M

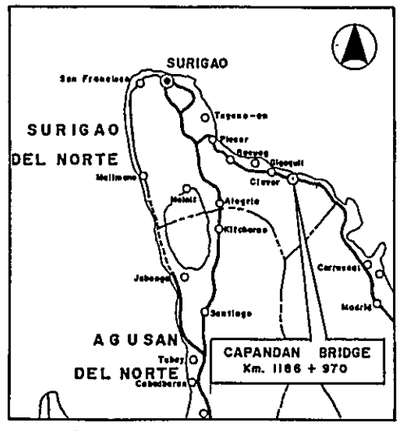

VICINITY - MAP

FOR CONSTRUCTI	
BRIDGE NO.	
10-06-06	

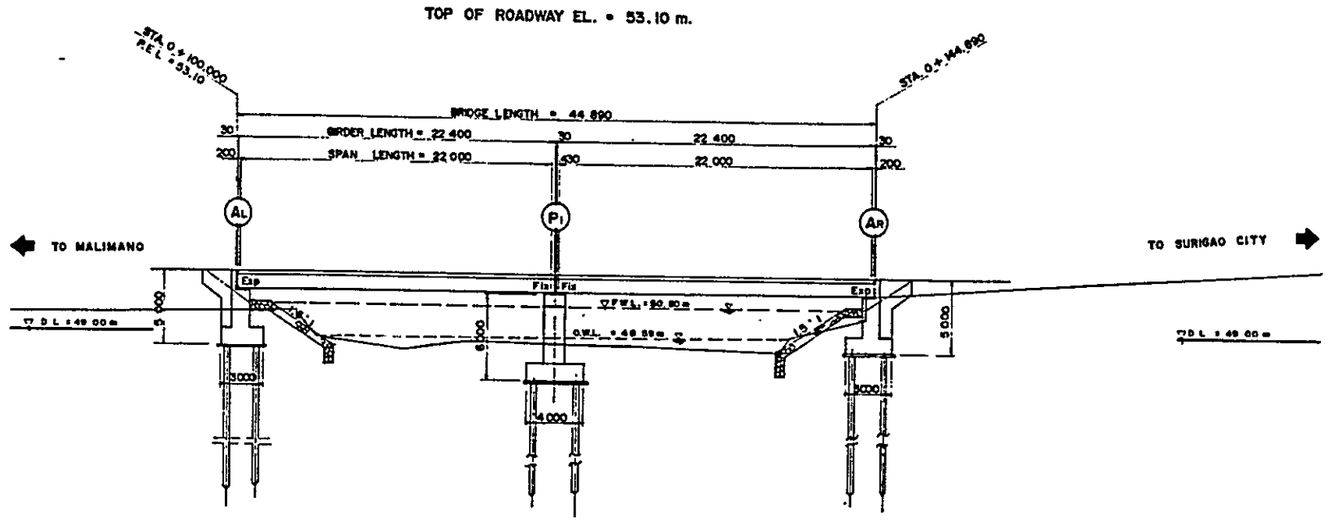

GENERAL ELEVATION
SCALE 1:200 M

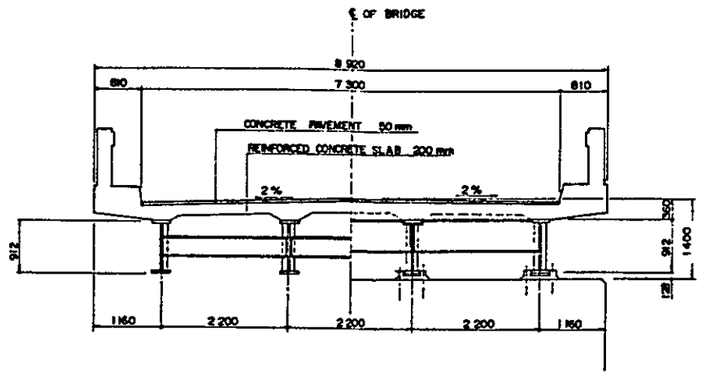

SUPERSTRUCTURE CROSS SECTION
SCALE 1:50 M

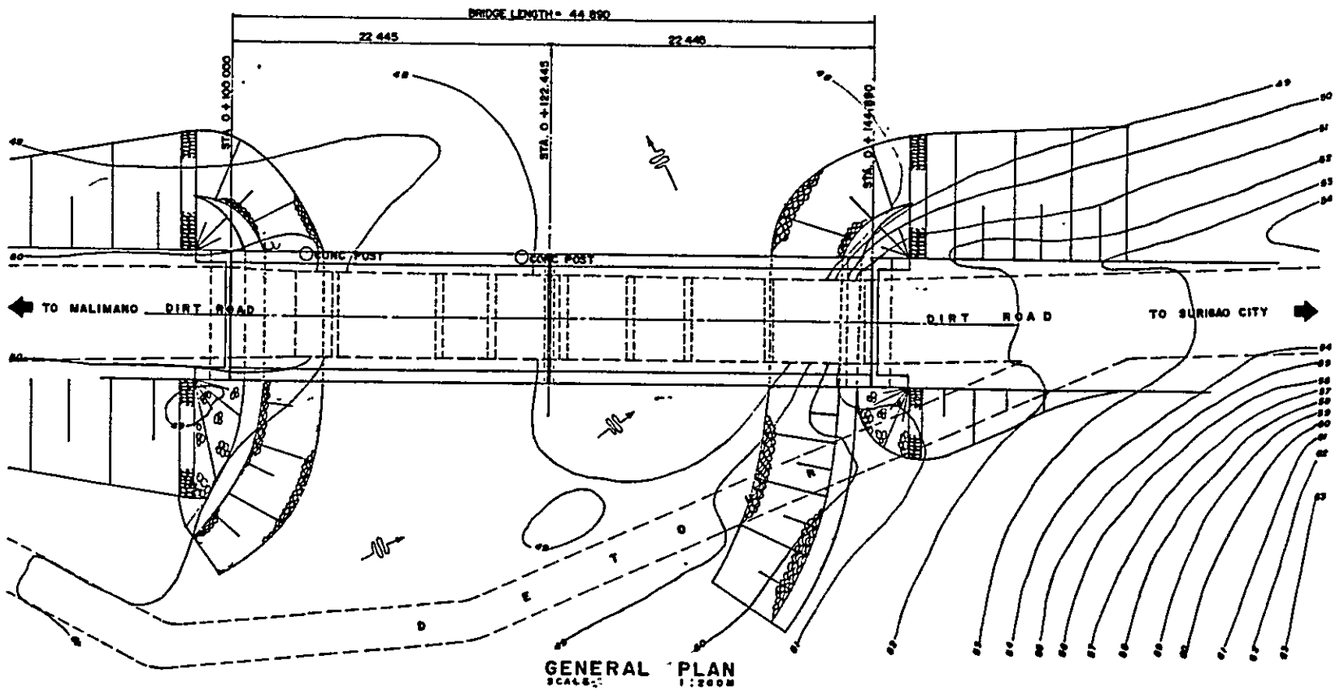

GENERAL PLAN
SCALE 1:200M

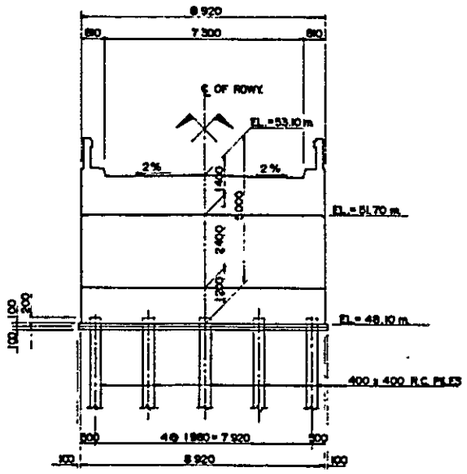

ABUTMENT (AL) & (AR)
SCALE 1:100 M

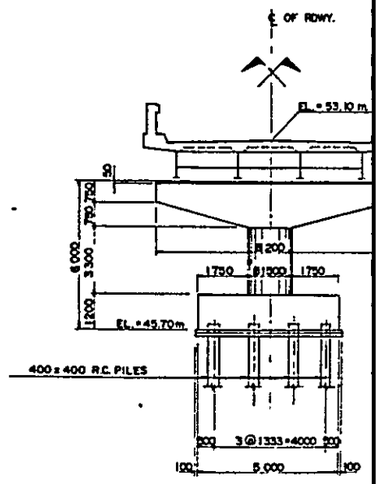

PIER (P1)
SCALE 1:100 M

BASIC DESIGN STUDY ON THE PROJECT FOR CONSTRUCTION OF BRIDGES ALONG RURAL ROADS IN MINDANAO AREA		
BRIDGE NO.	BRIDGE NAME	SHEET NO.
10-06-06	TIGBAO	12

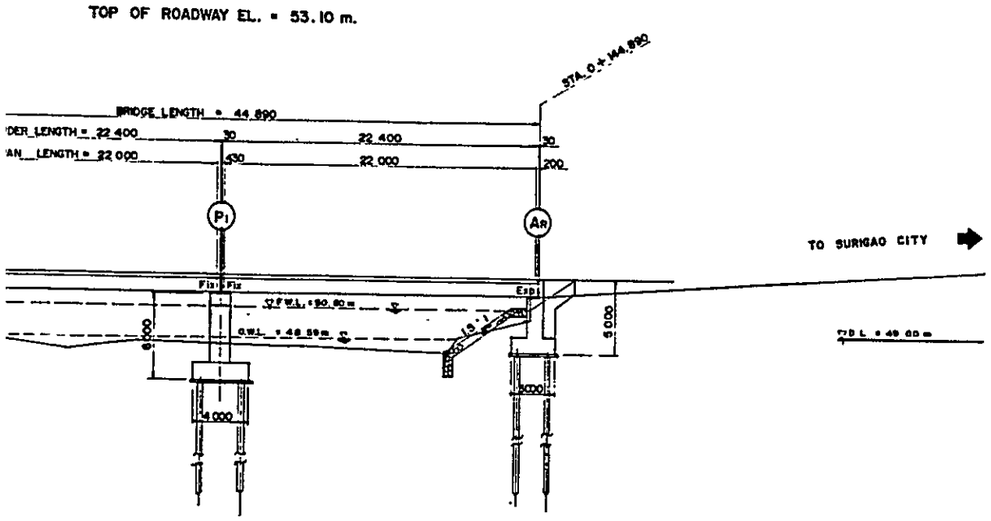

GENERAL ELEVATION
SCALE 1:200 M

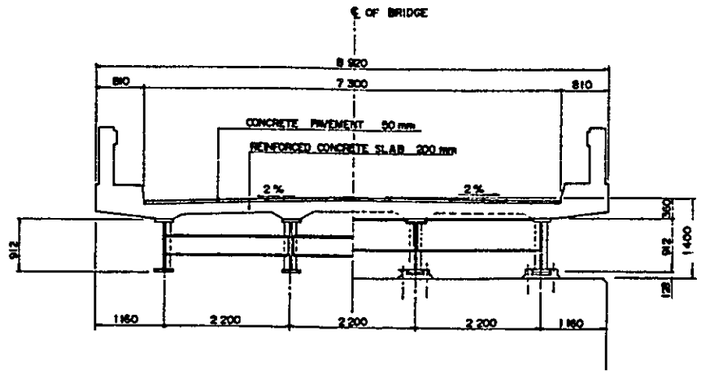

SUPERSTRUCTURE CROSS SECTION
SCALE 1:50 M

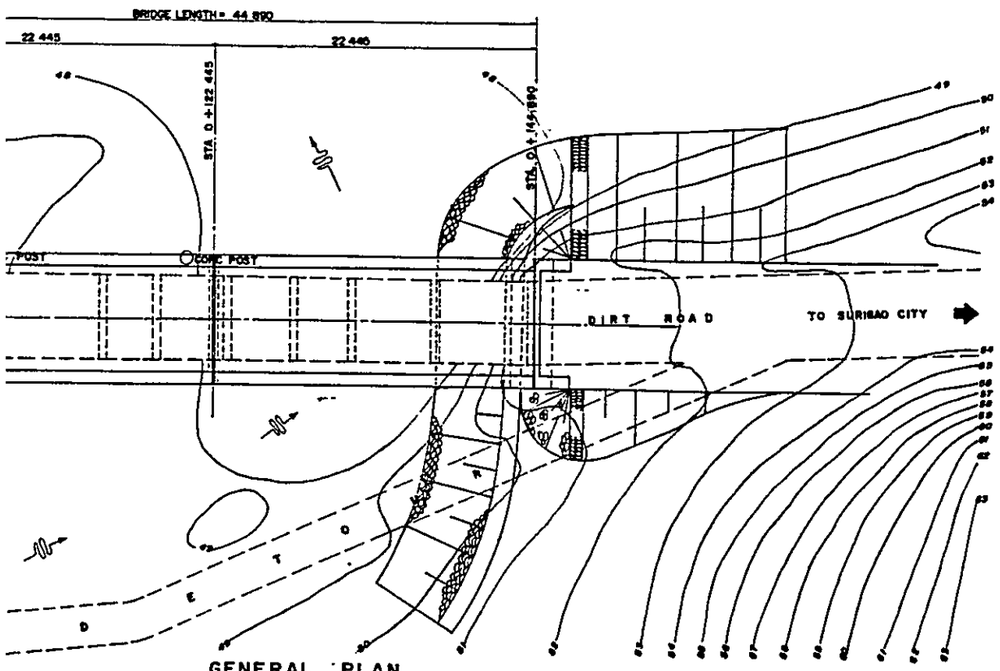

GENERAL PLAN
SCALE 1:200 M

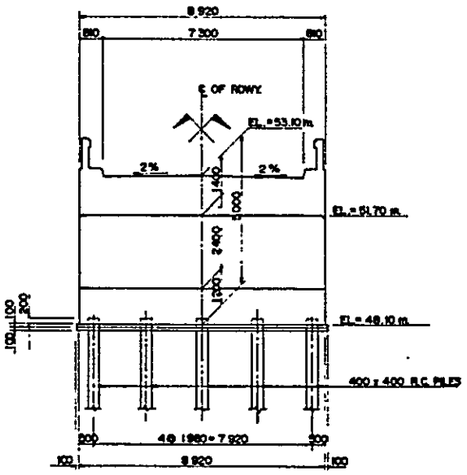

ABUTMENT (AL) & (AR)
SCALE 1:100 M

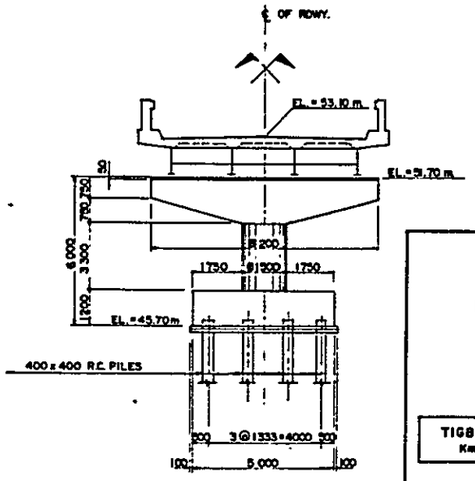

PIER (PI)
SCALE 1:100 M

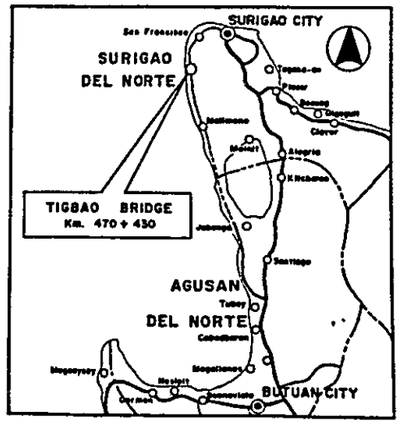

VICINITY MAP

BASIC DESIGN STUDY ON THE PROJECT FOR CONSTRUCTION OF BRIDGES ALONG RURAL ROADS IN MINDANAO AREA		
BRIDGE NO.	BRIDGE NAME	SHEET NO.
10-06-07	BALITE	13

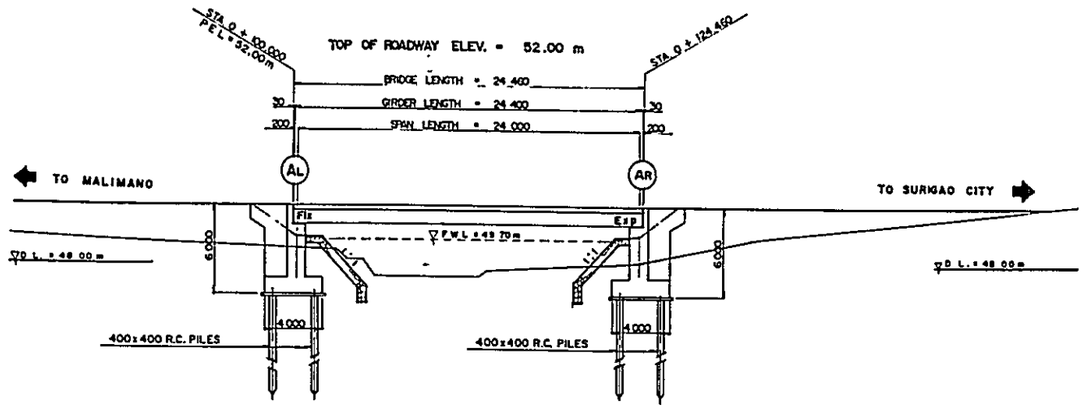

GENERAL ELEVATION
SCALE 1:200 M

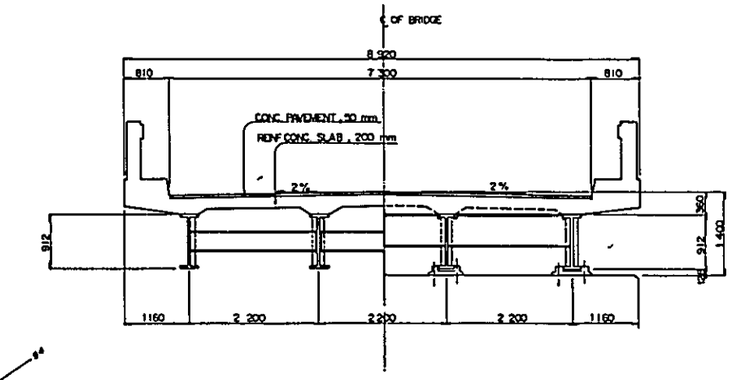

SUPERSTRUCTURE CROSS SECTION
SCALE 1:50 M

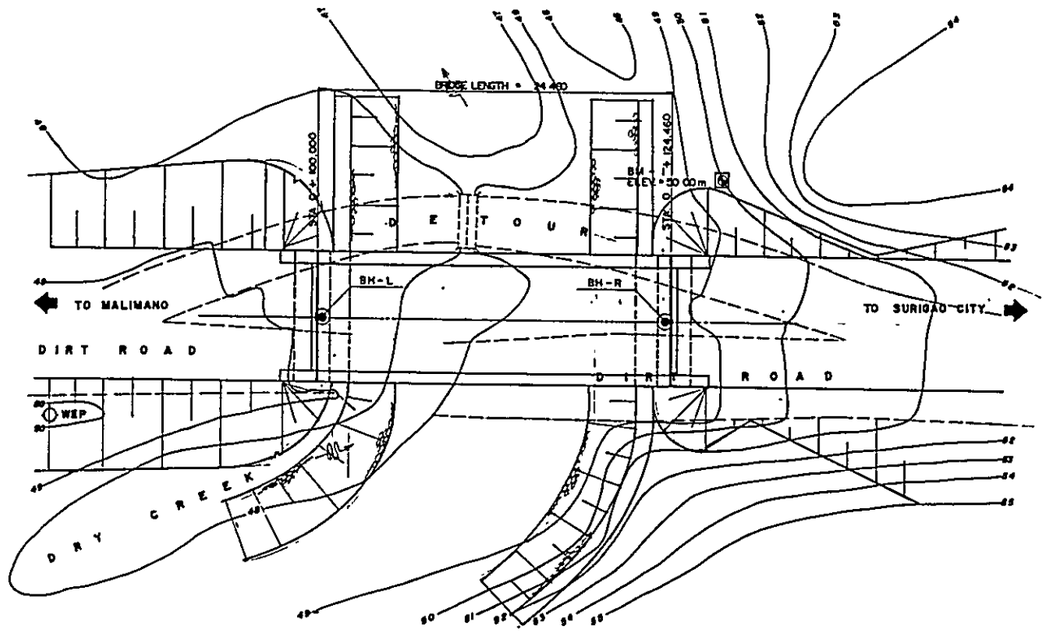

GENERAL PLAN
SCALE 1:200 M

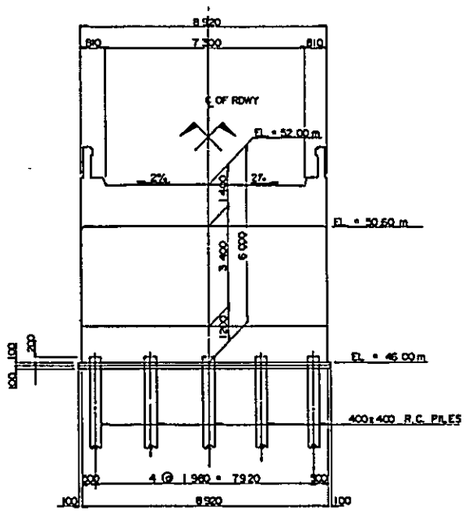

ABUTMENT (AL) & (AR)
SCALE 1:100 M

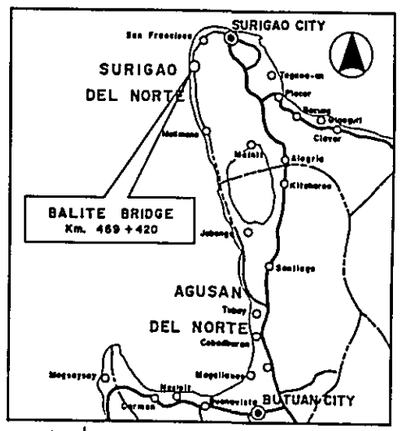

VICINITY MAP

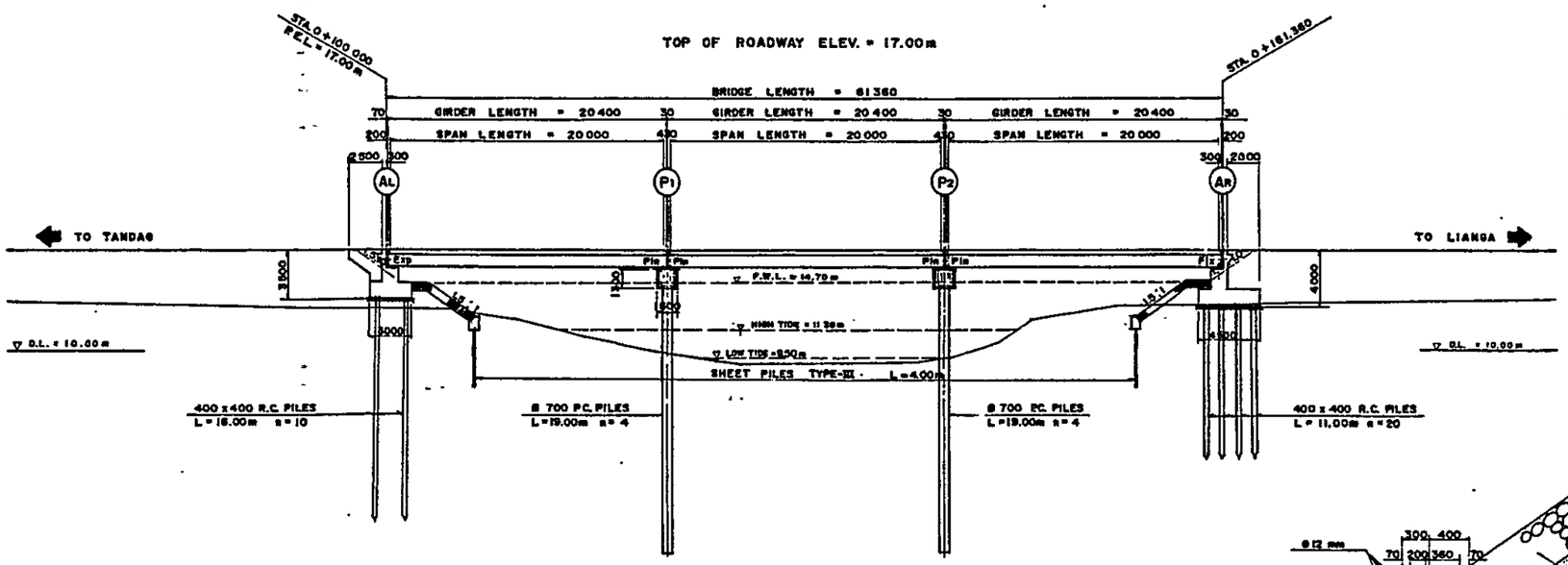

GENERAL ELEVATION
SCALE 1:200 M

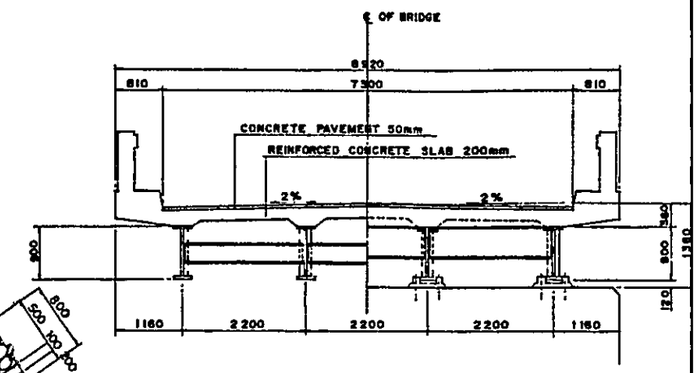

SUPERSTRUCTURE CROSS SECTION
SCALE 1:50 M

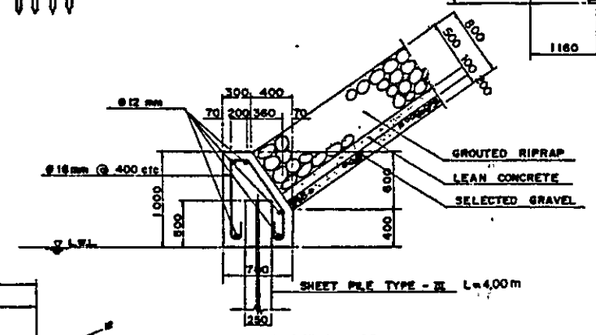

CAPING OF SHEET PILES
SCALE 1:30 M

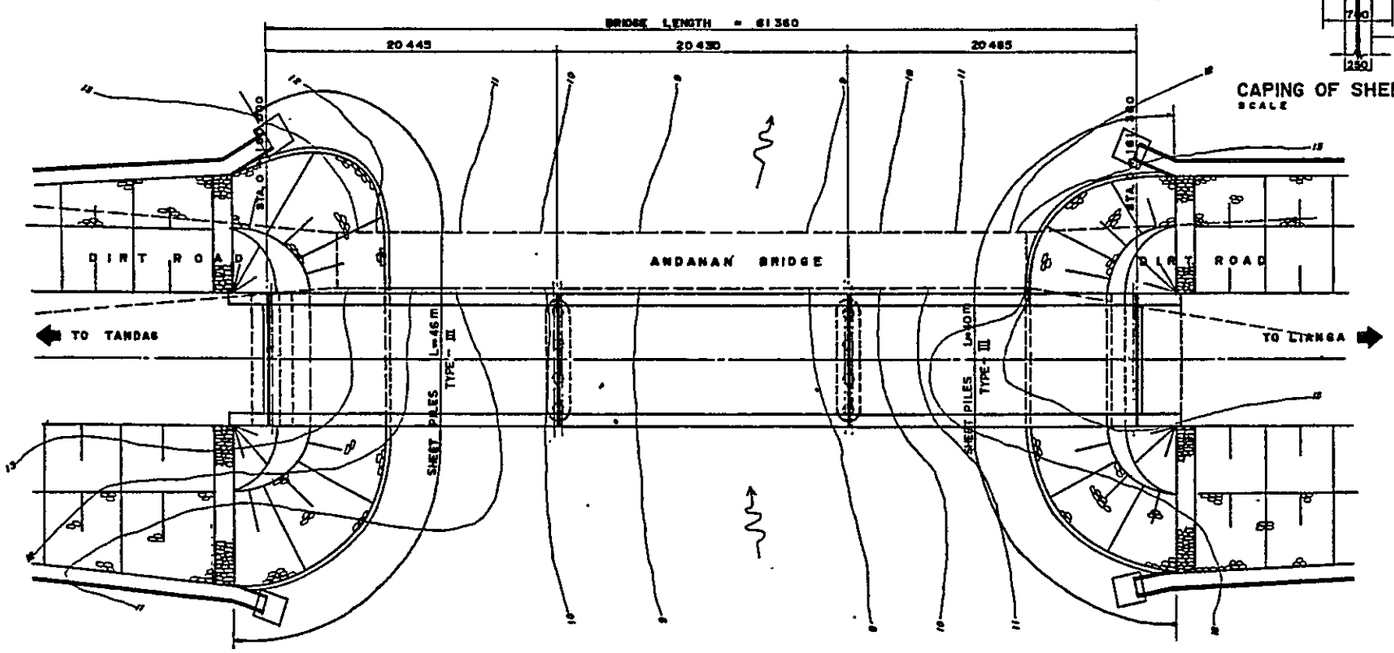

GENERAL PLAN
SCALE 1:200 M.

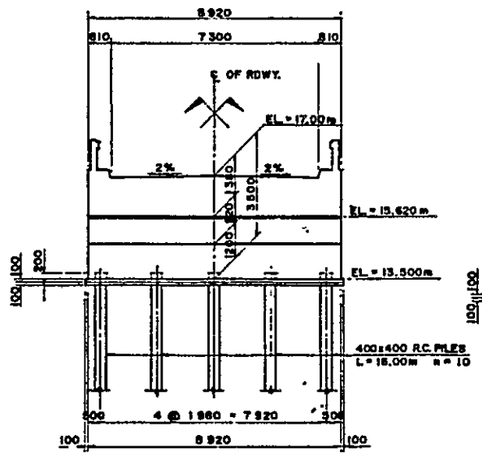

ABUTMENT (AL)
SCALE 1:100 M

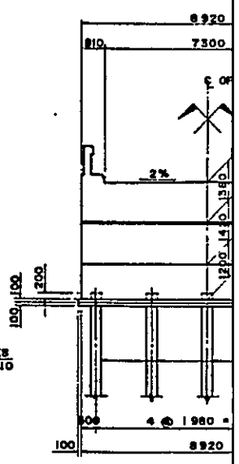

ABUTMENT
SCALE

BASIC DESIGN STUDY ON THE PROJECT FOR CONSTRUCTION OF BRIDGES ALONG RURAL ROADS IN MINDANAO AREA		
BRIDGE NO.	BRIDGE NAME	SHEET NO.
11-01-01	ANDANAN	14

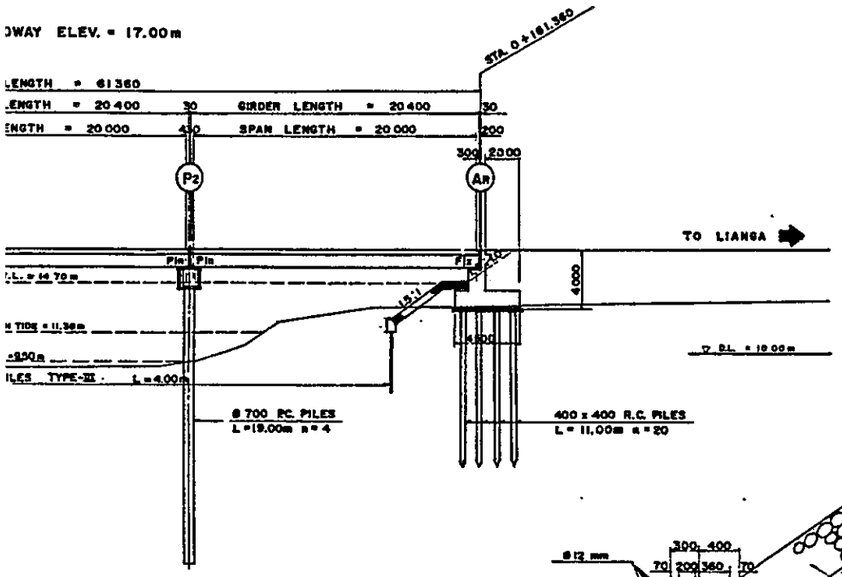

ELEVATION
1 : 200 M

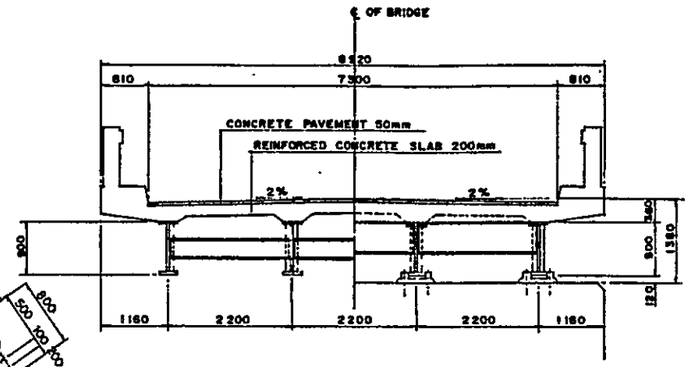

SUPERSTRUCTURE CROSS SECTION
SCALE 1 : 50 M

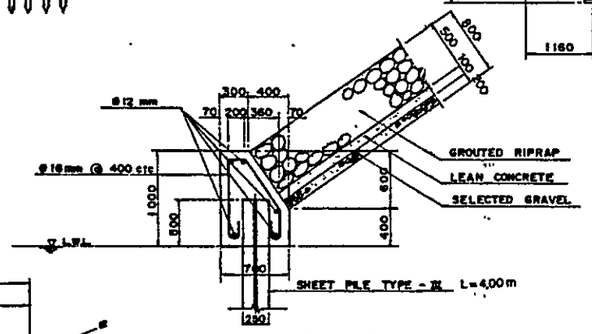

CAPING OF SHEET PILES
SCALE 1:50 M

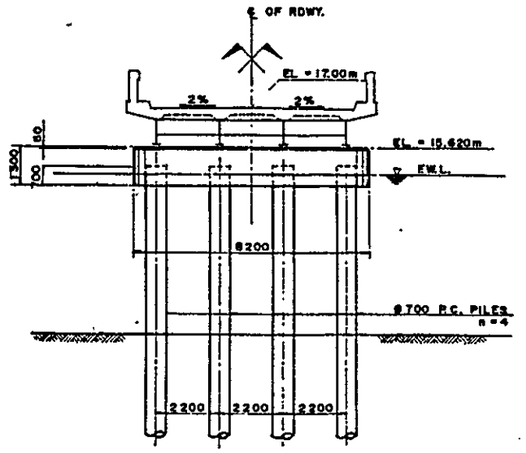

PIER (P1) & (P2)
SCALE 1 : 100 M

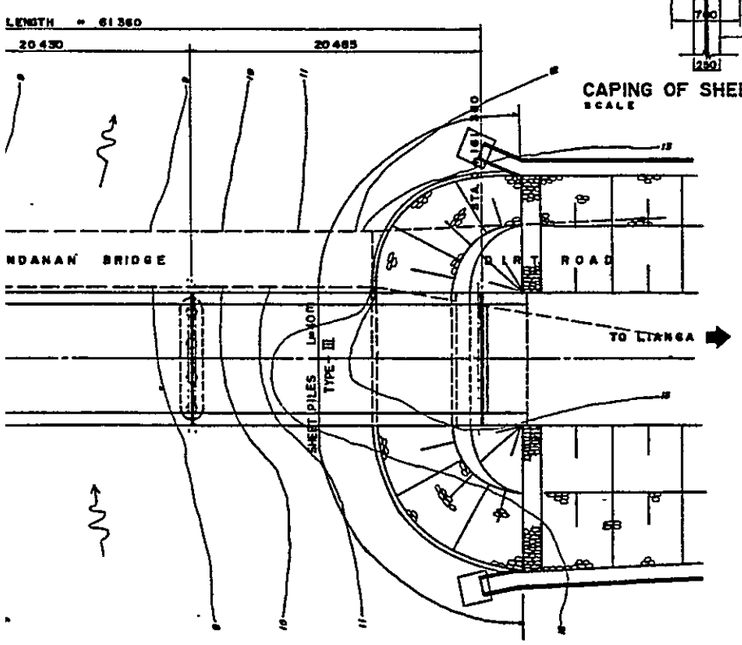

PLAN
1 : 200 M.

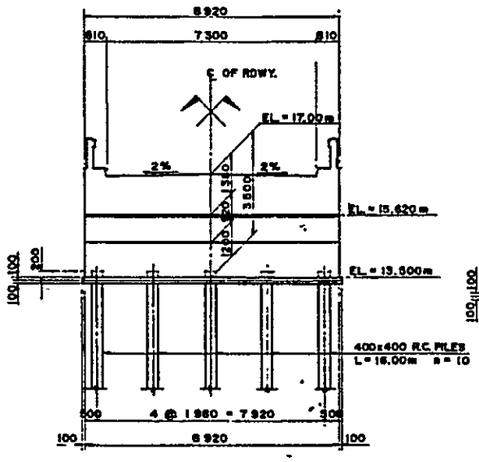

ABUTMENT (AL)
SCALE 1:100 M

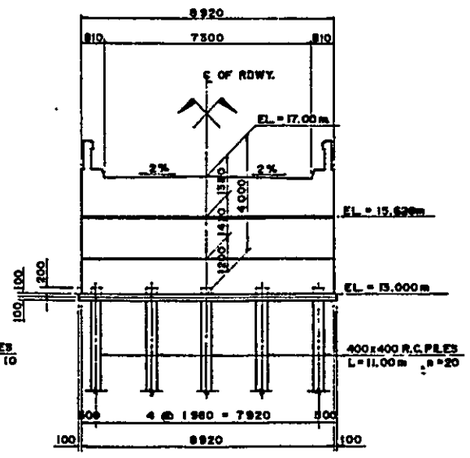

ABUTMENT (AR)
SCALE 1:100 M

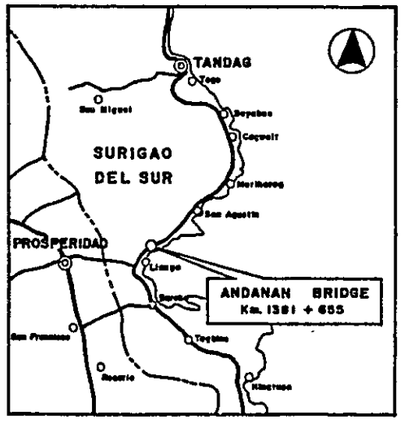

VICINITY MAP

BASIC DESIGN STUDY ON THE PROJECT FOR CONSTRUCTION OF BRIDGES ALONG RURAL ROADS IN MINDANAO AREA		
BRIDGE NO.	BRIDGE NAME	SHEET NO.
11-01-02	PAGTILAAN	15

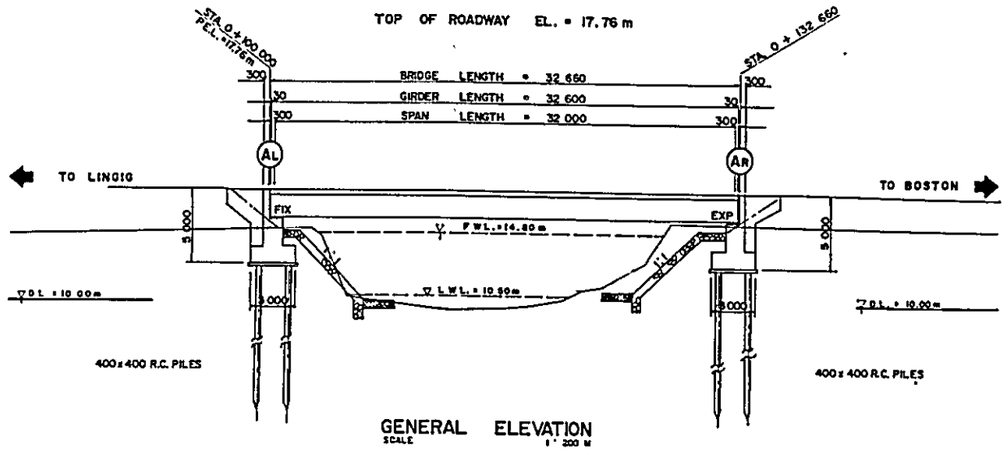

GENERAL ELEVATION
SCALE 1 : 200 M

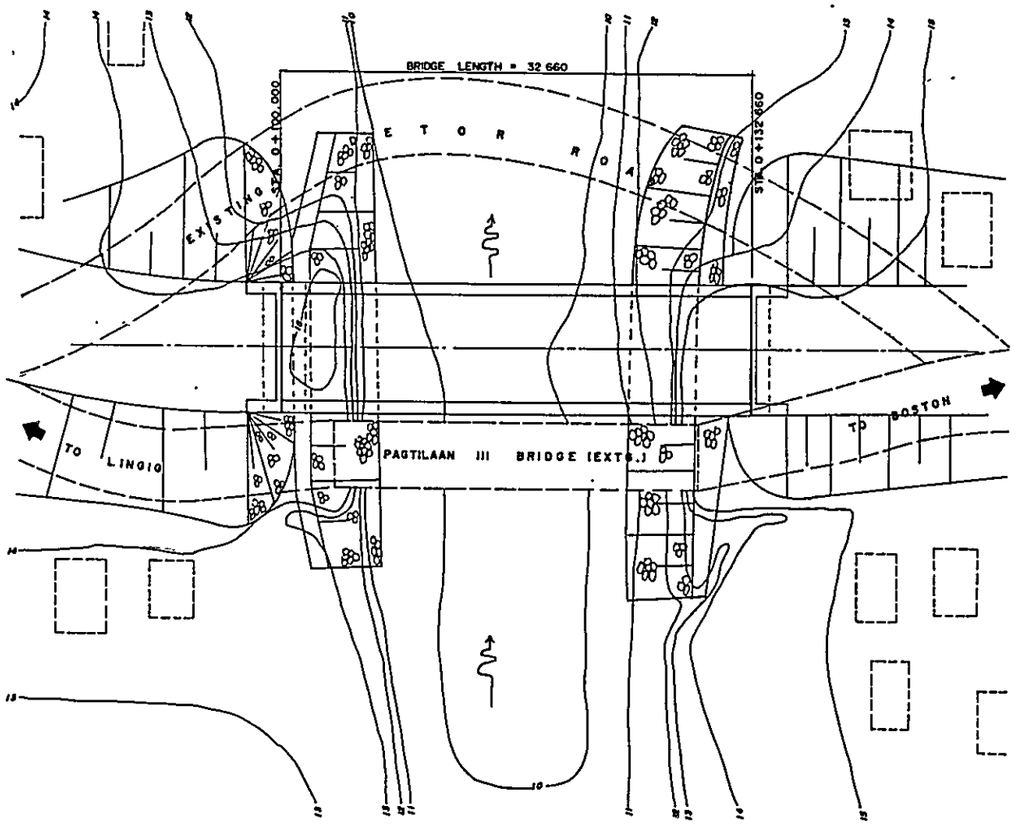

GENERAL PLAN
SCALE 1 : 200 M.

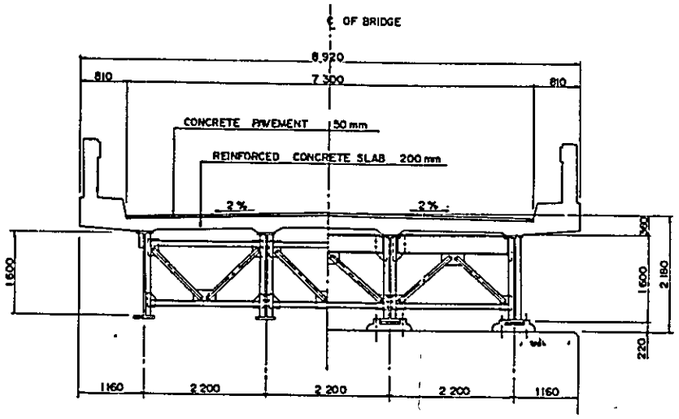

SUPERSTRUCTURE CROSS SECTION
SCALE 1 : 50 M

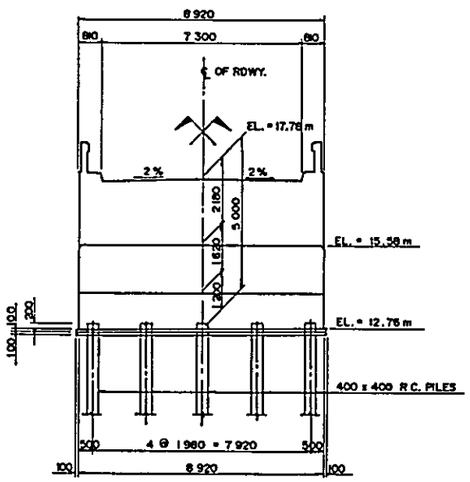

ABUTMENT (AL) & (AR)
SCALE 1 : 100 M

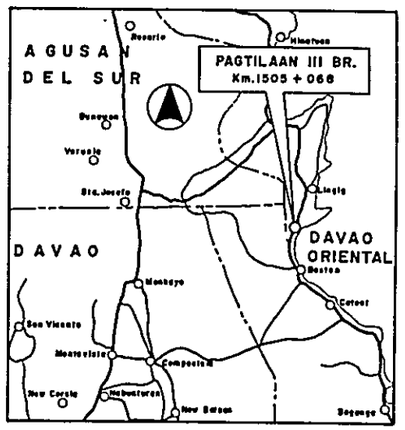

VICINITY MAP

BASIC DESIGN STUDY ON THE PROJECT FOR CONSTRUCTION OF BRIDGES ALONG RURAL ROADS IN MINDANAO AREA		
BRIDGE NO.	BRIDGE NAME	SHEET NO.
11-01-03	QUEZON	16

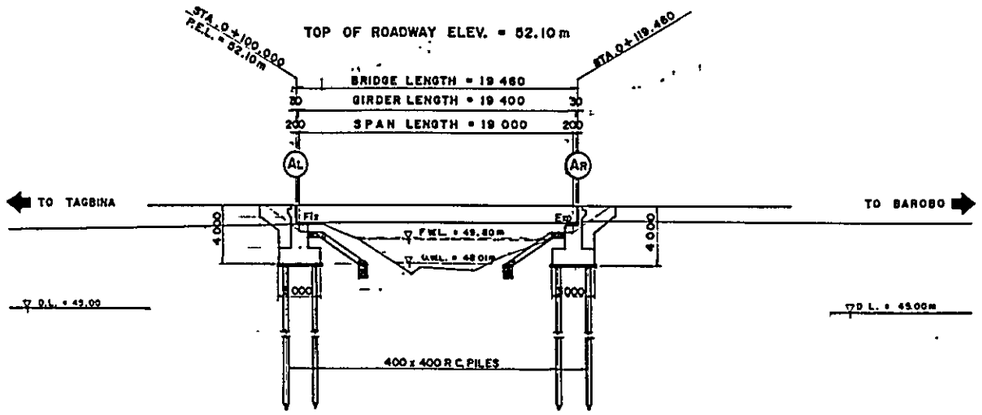

GENERAL ELEVATION
SCALE 1 : 200 M

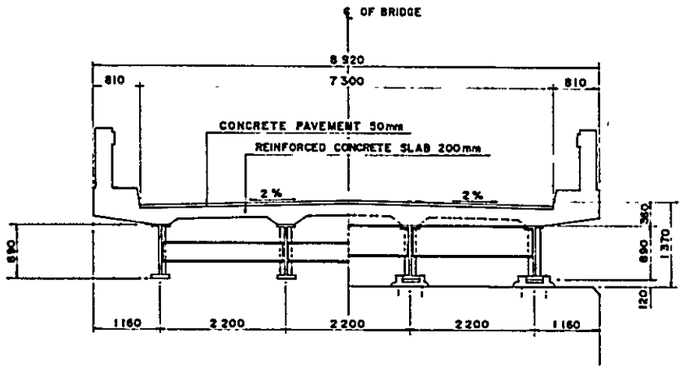

SUPERSTRUCTURE CROSS SECTION
SCALE 1 : 50 M

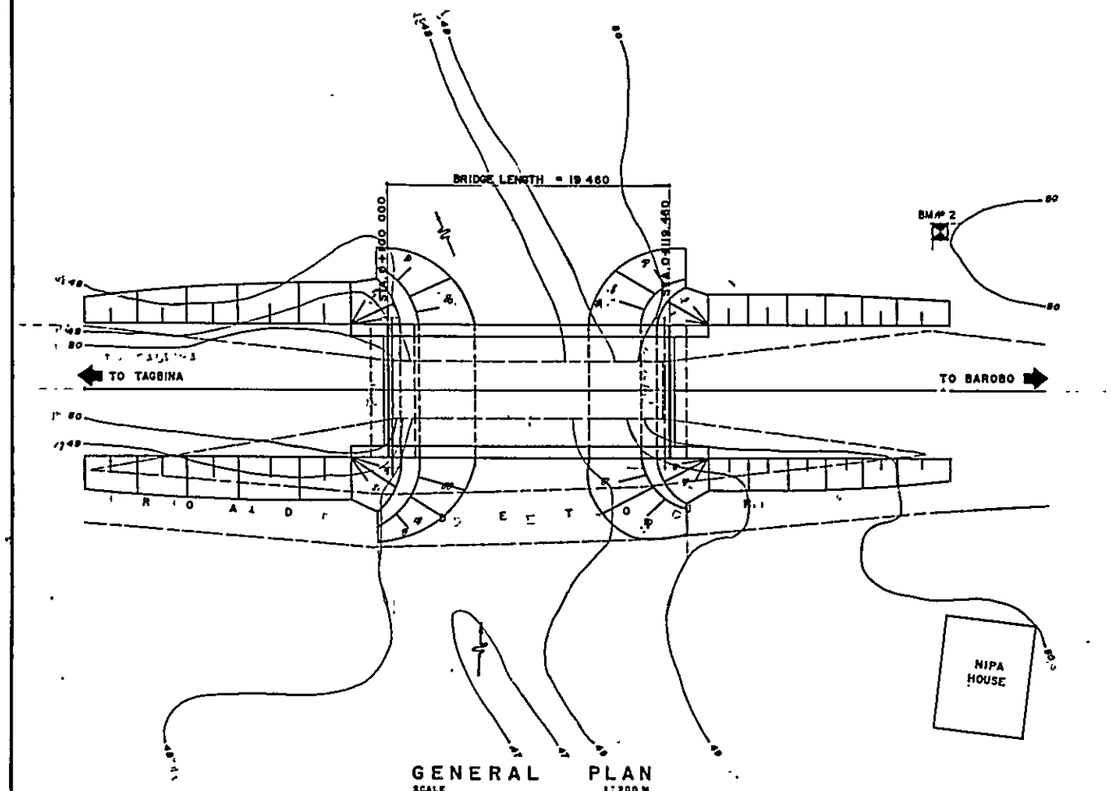

GENERAL PLAN
SCALE 1 : 200 M

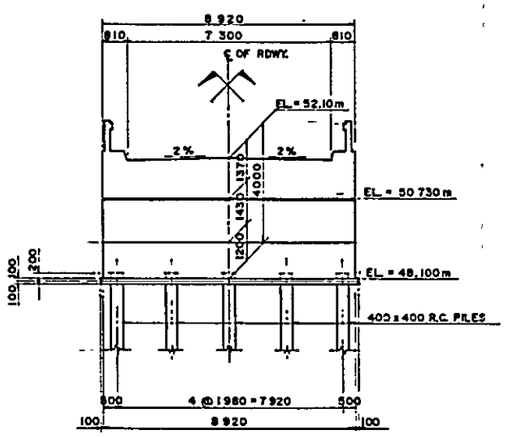

ABUTMENT (AL) & (AR)
SCALE 1 : 100 M

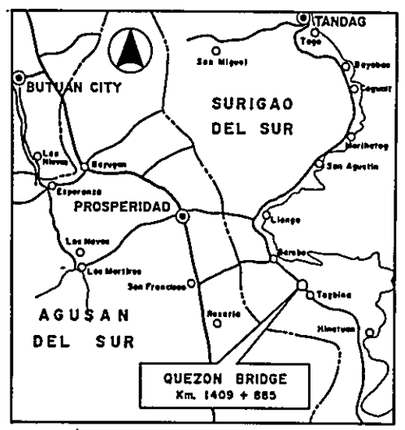

VICINITY MAP

BASIC DESIGN STUDY ON THE PROJECT FOR CONSTRUCTION OF BRIDGES ALONG RURAL ROADS IN MINDANAO AREA		
BRIDGE NO.	BRIDGE NAME	SHEET NO.
11-01-04	PAGBAKATAN	17

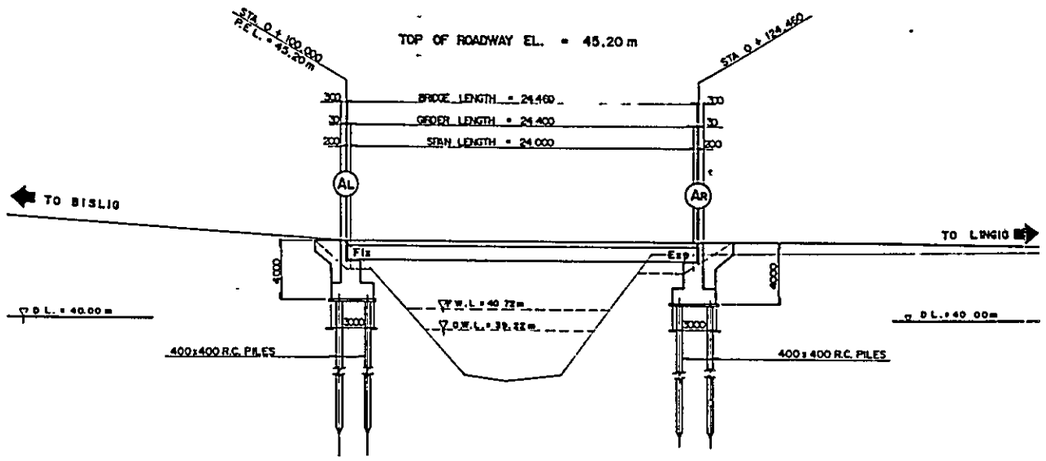

GENERAL ELEVATION
SCALE 1:200 M

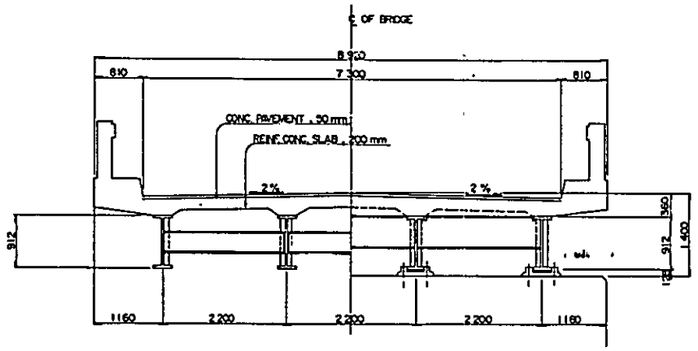

SUPERSTRUCTURE CROSS SECTION
SCALE 1:50 M

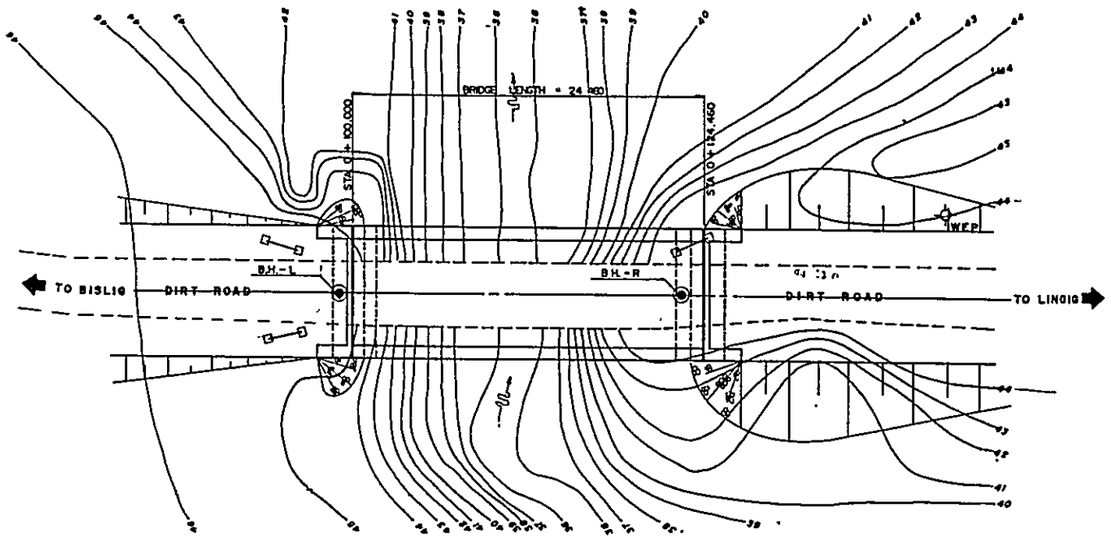

GENERAL PLAN
SCALE 1:200M

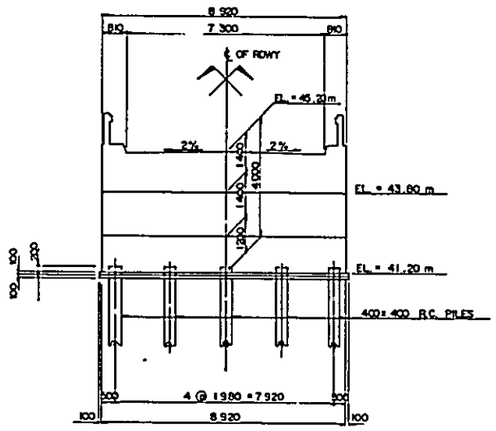

ABUTMENT (AL) & (AR)
SCALE 1:100 M

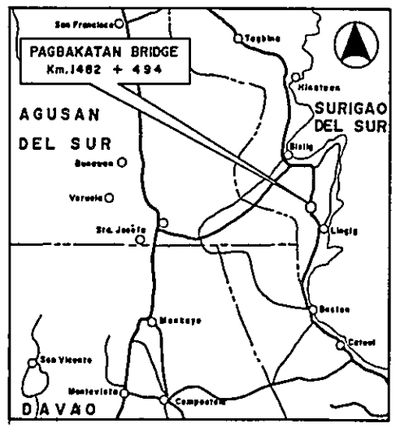

VICINITY MAP

BASIC DESIGN STUDY ON THE PROJECT FOR CONSTRUCTION OF BRIDGES ALONG RURAL ROADS IN MINDANAO AREA		
BRIDGE NO.	BRIDGE NAME	SHEET NO.
11-01-05	Union	18

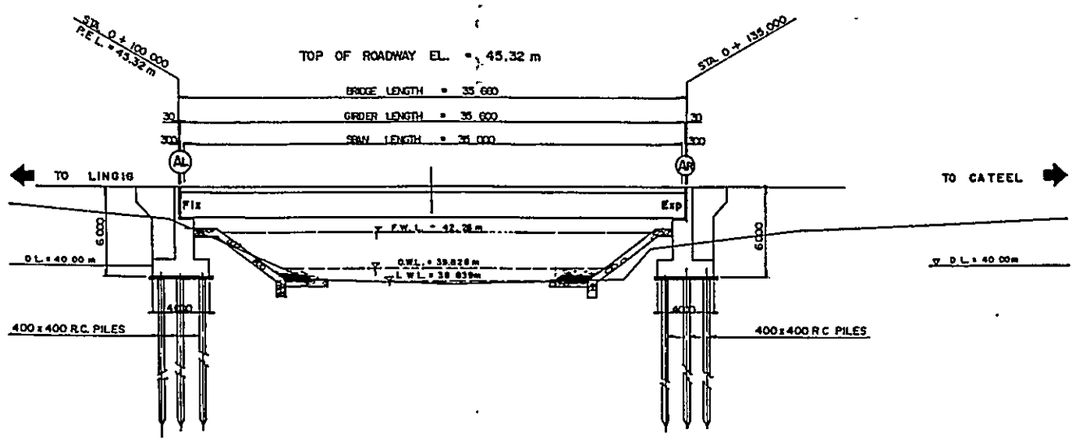

GENERAL ELEVATION
SCALE 1 : 200 M

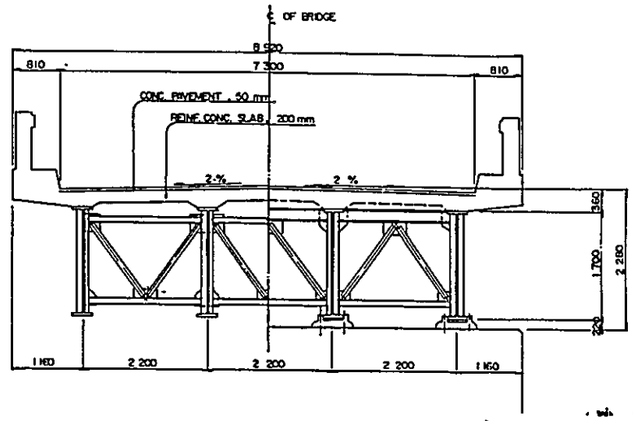

SUPERSTRUCTURE CROSS SECTION
SCALE 1 : 50 M

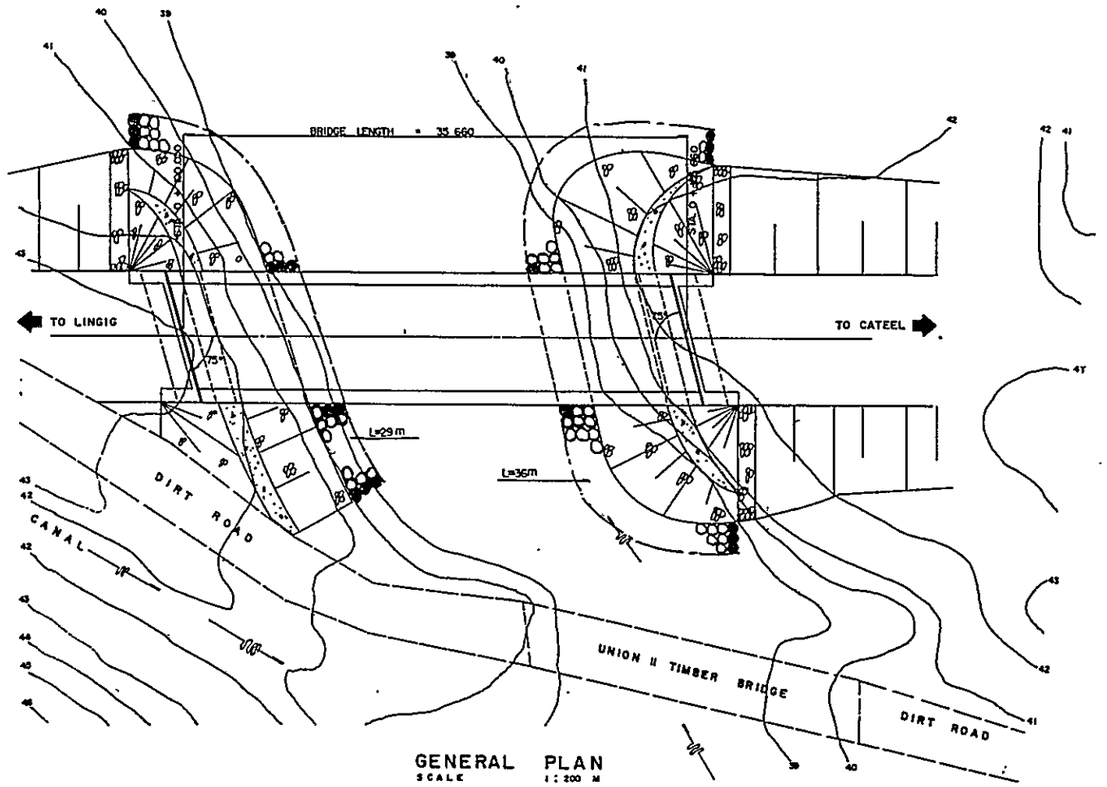

GENERAL PLAN
SCALE 1 : 200 M

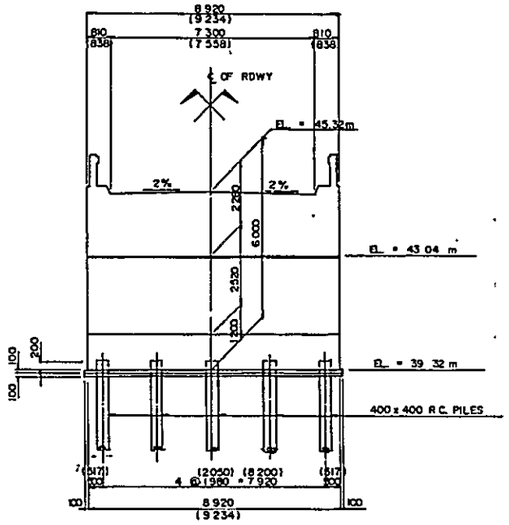

ABUTMENT (AL) & (AR)
SCALE 1 : 100 M

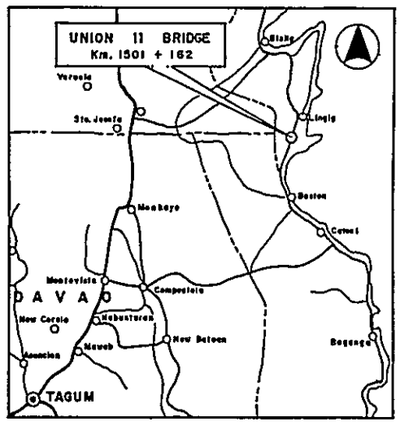

VICINITY MAP

BASIC DESIGN STUDY ON THE PROJECT FOR CONSTRUCTION OF BRIDGES ALONG RURAL ROADS IN MINDANAO AREA		
BRIDGE NO.	BRIDGE NAME	SHEET NO.
11-01-06	TAGASAKA	19

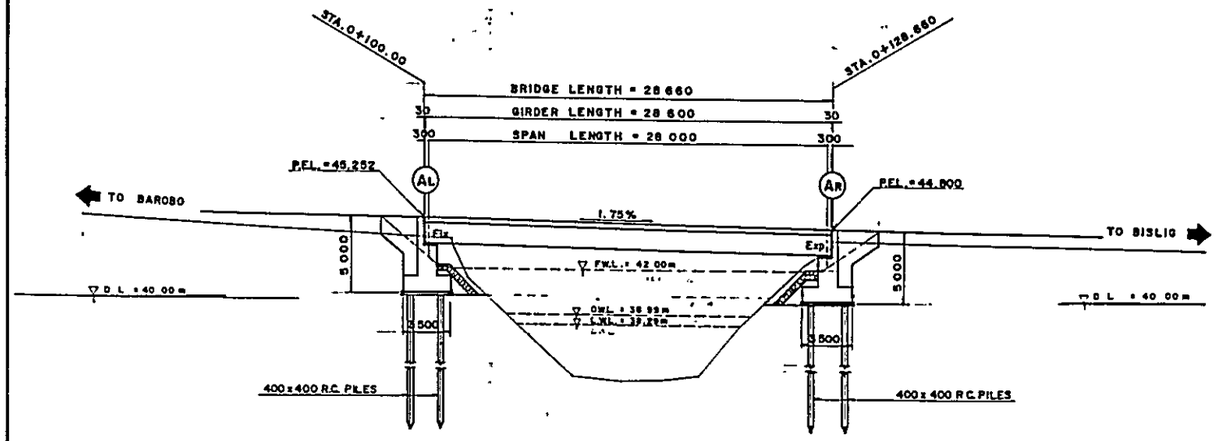

GENERAL ELEVATION
SCALE 1 : 200 M

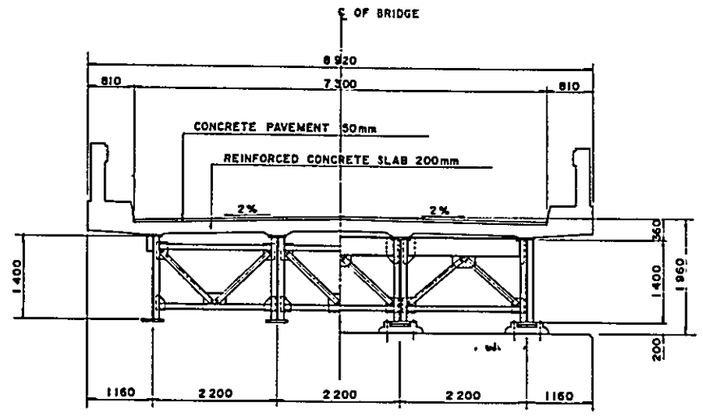

SUPERSTRUCTURE CROSS SECTION
SCALE 1 : 50 M

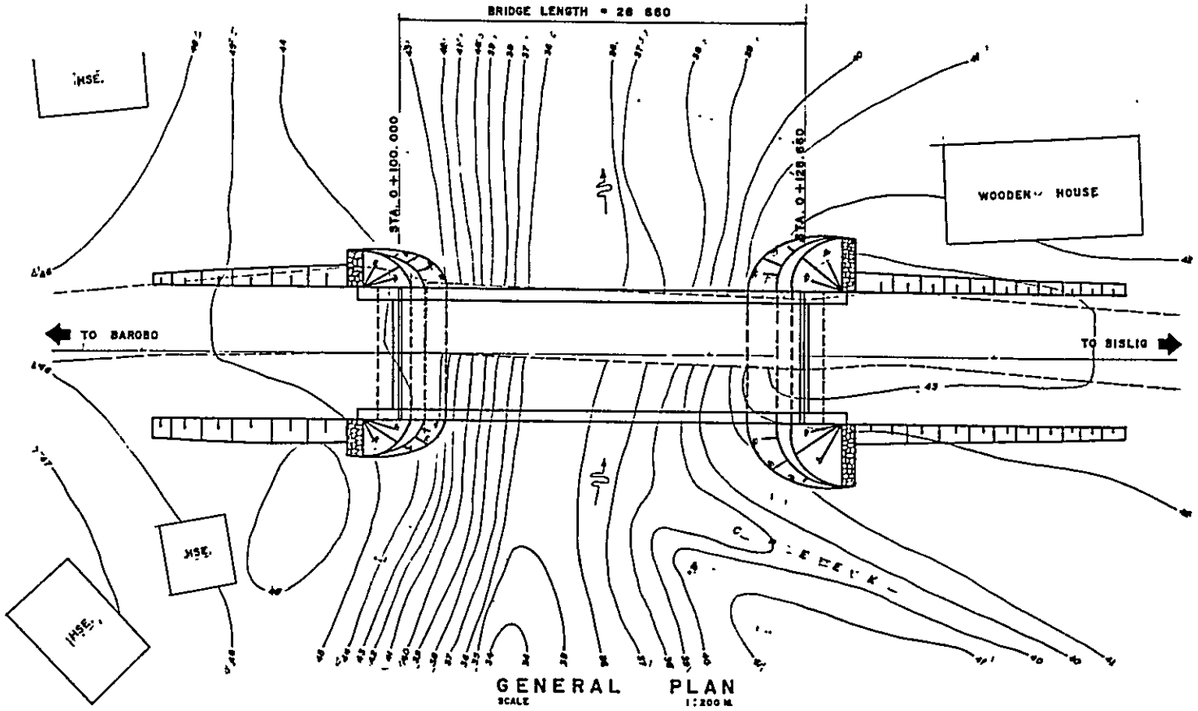

GENERAL PLAN
SCALE 1 : 200 M

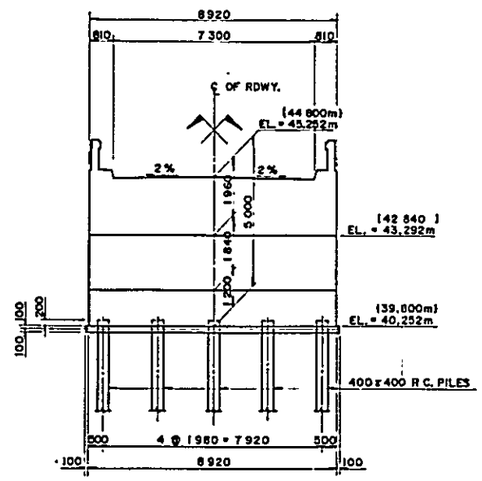

ABUTMENT AL & AR
SCALE 1 : 100 M

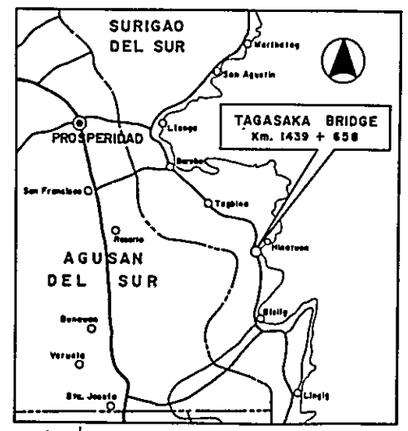

VICINITY MAP

BASIC DESIGN STUDY ON THE PROJECT FOR CONSTRUCTION OF BRIDGES ALONG RURAL ROADS IN MINDANAO AREA		
BRIDGE NO.	BRIDGE NAME	SHEET NO.
11-03-01	Dao-An	20

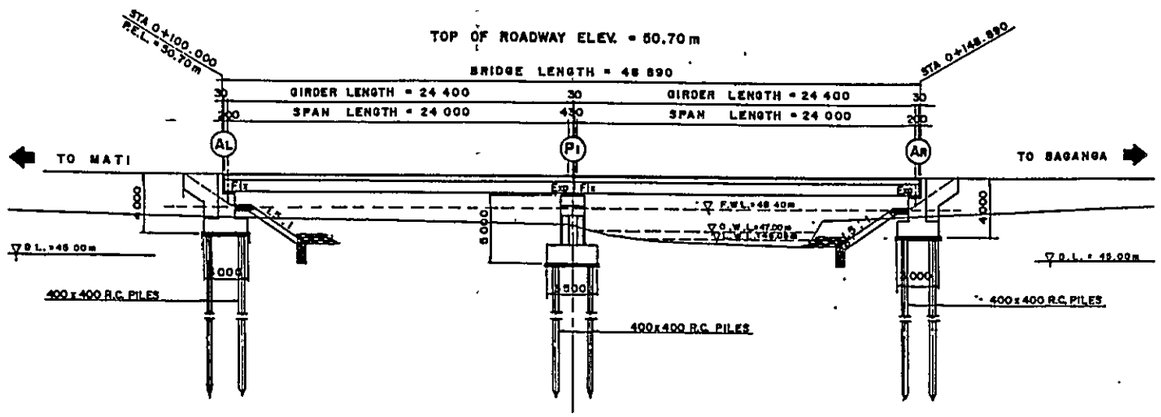

GENERAL ELEVATION
SCALE 1 : 200 M

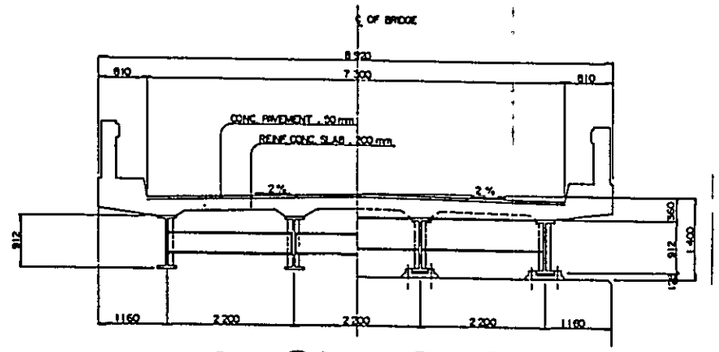

AL ~ P1 & P1 ~ AR

SUPERSTRUCTURE CROSS SECTION
SCALE 1 : 50 M

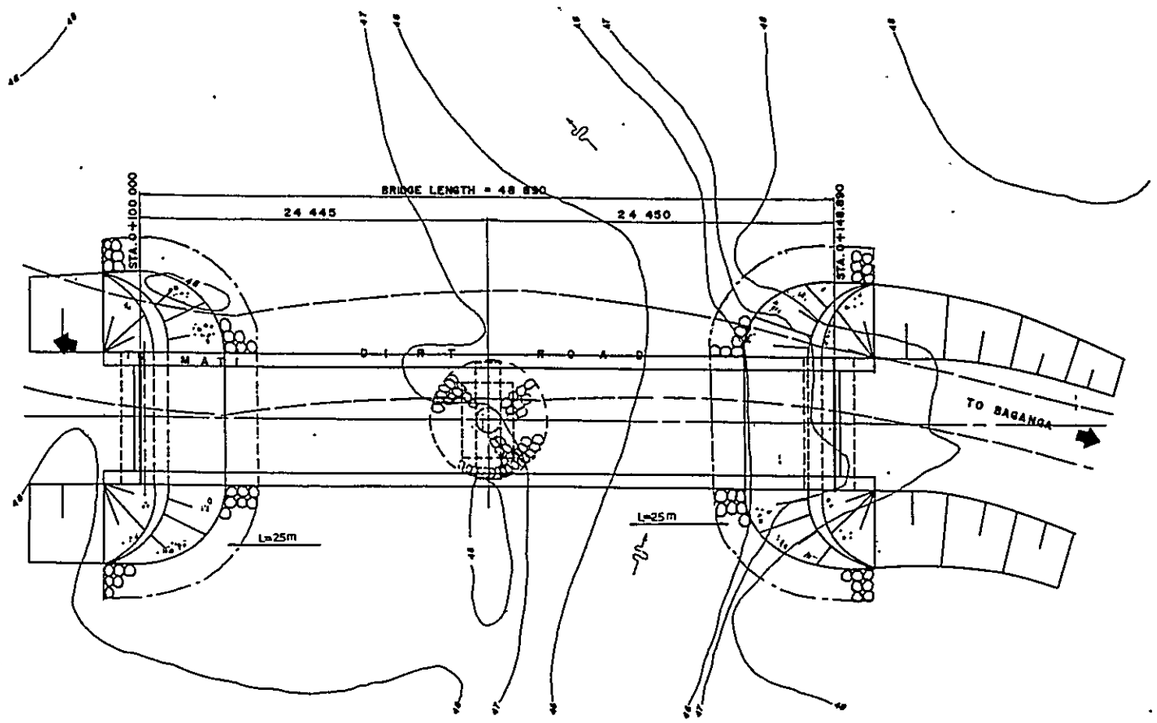

GENERAL PLAN
SCALE 1 : 200 M.

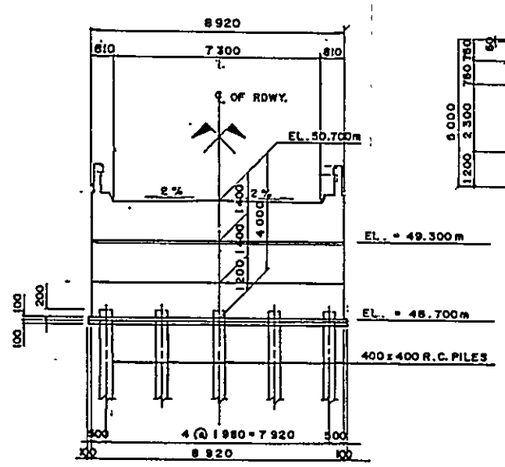

ABUTMENT AL & AR
SCALE 1 : 100 M

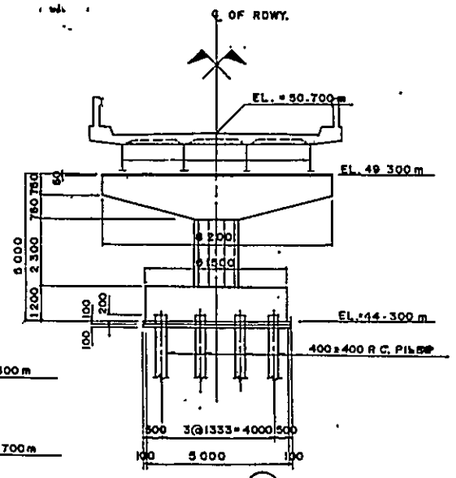

PIER P1
SCALE 1 : 100 M

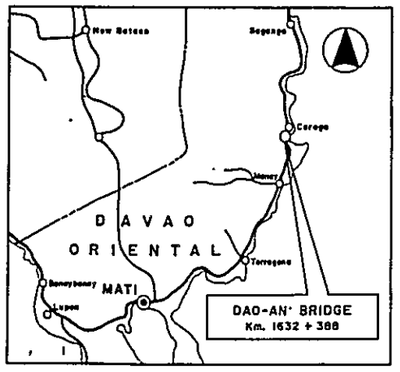

VICINITY MAP

BASIC DESIGN STUDY ON THE PROJECT FOR CONSTRUCTION OF BRIDGES ALONG RURAL ROADS IN MINDANAO AREA		
BRIDGE NO.	BRIDGE NAME	SHEET NO.
11-03-02	Licop	21

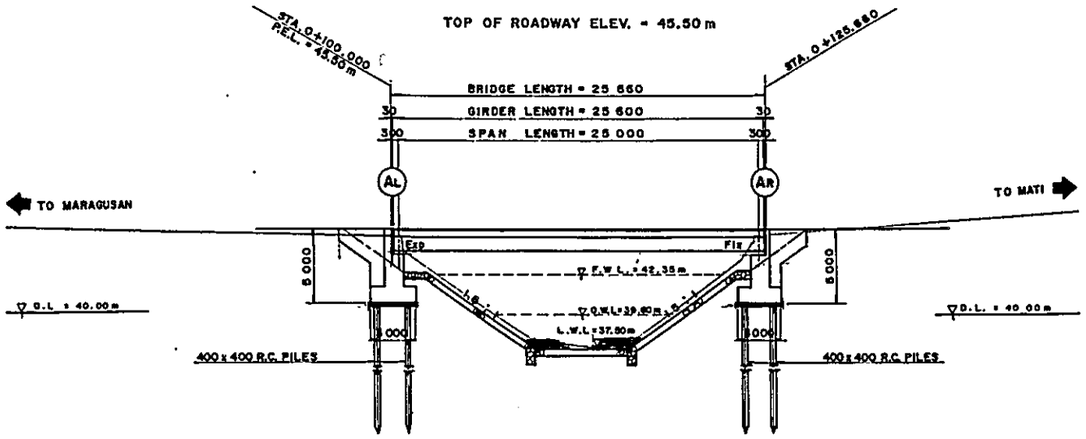

GENERAL ELEVATION
SCALE 1 : 200 M

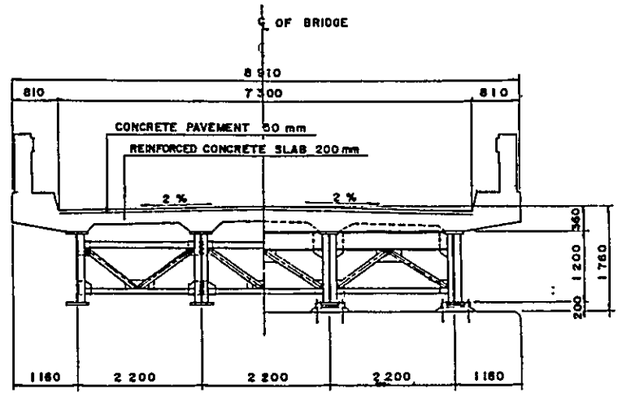

SUPERSTRUCTURE CROSS SECTION
SCALE 1 : 50 M

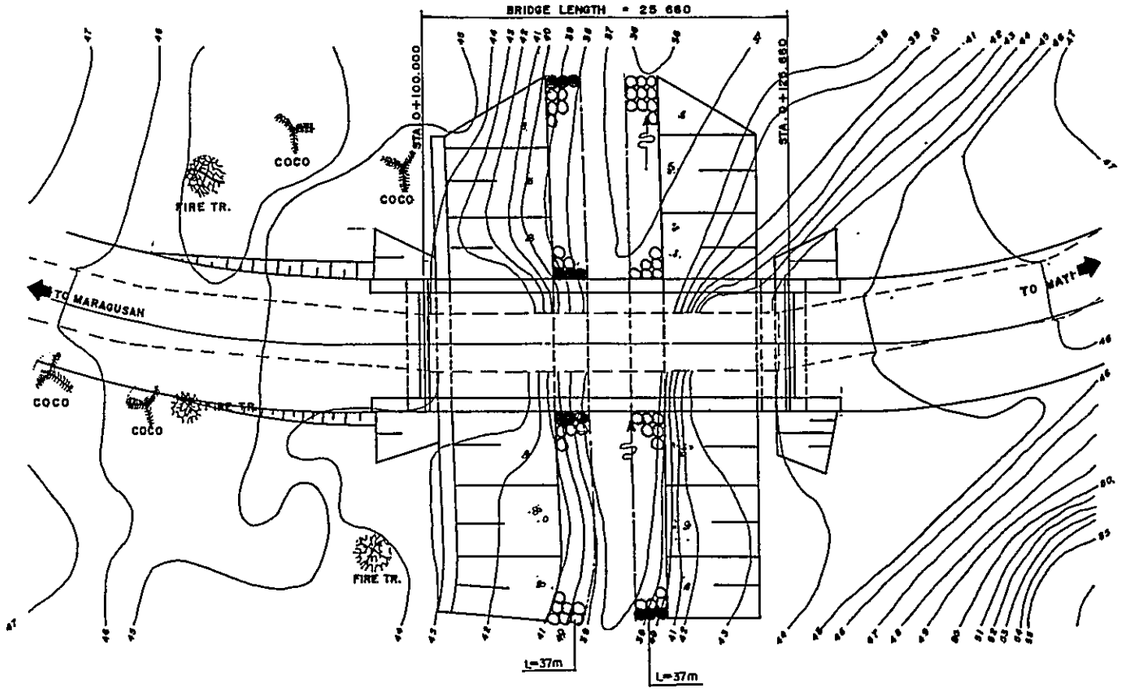

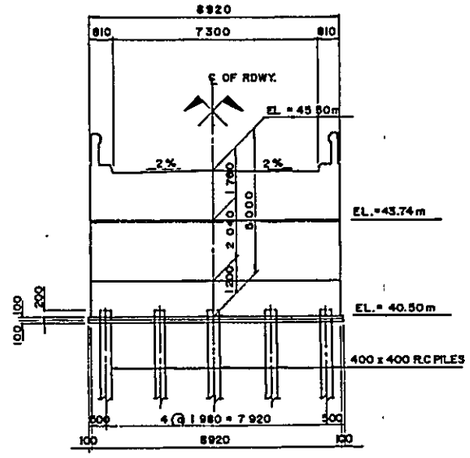

ABUTMENT AL & AR
SCALE 1 : 100 M

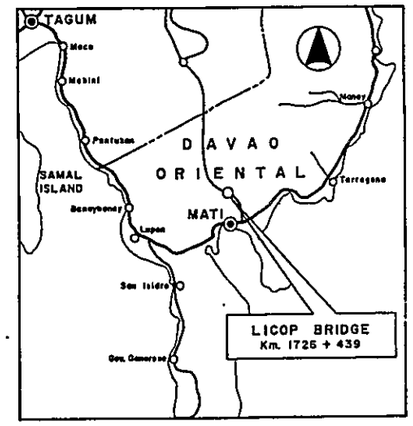

VICINITY MAP

BASIC DESIGN STUDY ON THE PROJECT FOR CONSTRUCTION OF BRIDGES ALONG RURAL ROADS IN MINDANAO AREA		
BRIDGE NO.	BRIDGE NAME	SHEET NO.
11-03-03	TAWAS	22

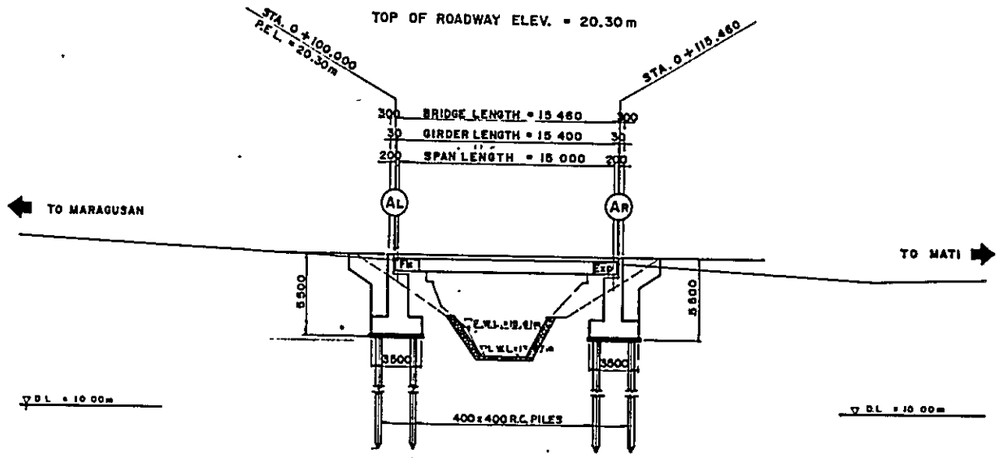

GENERAL ELEVATION
SCALE 1 : 200 M

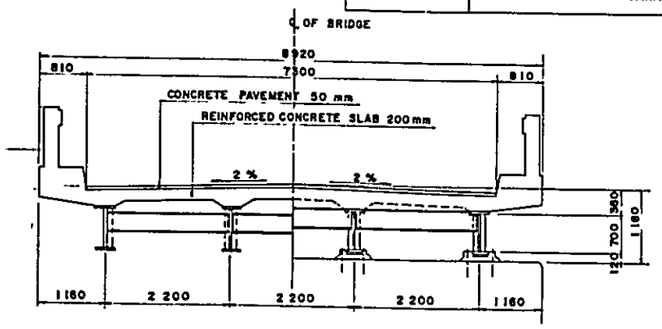

SUPERSTRUCTURE CROSS SECTION
SCALE 1:50 M

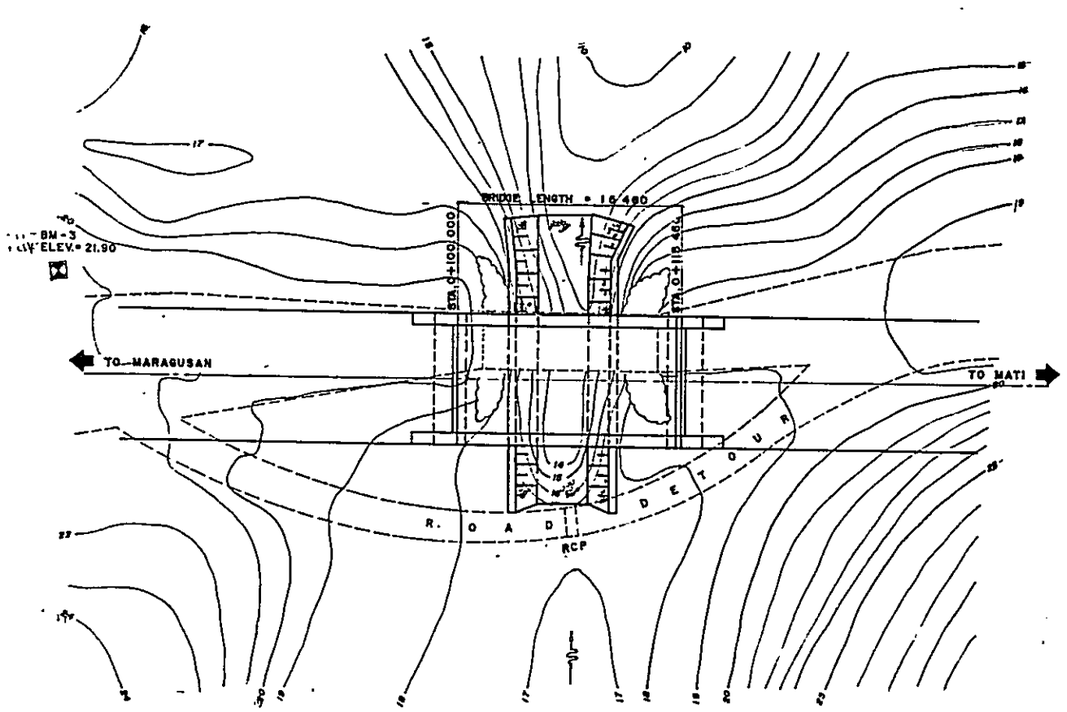

GENERAL PLAN
SCALE 1:200 M

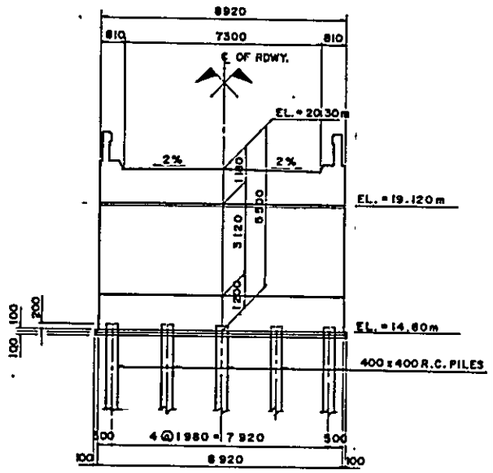

ABUTMENT (AL) & (AR)
SCALE 1 : 100 M

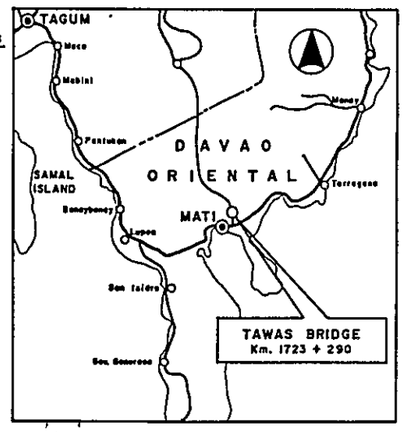

VICINITY MAP

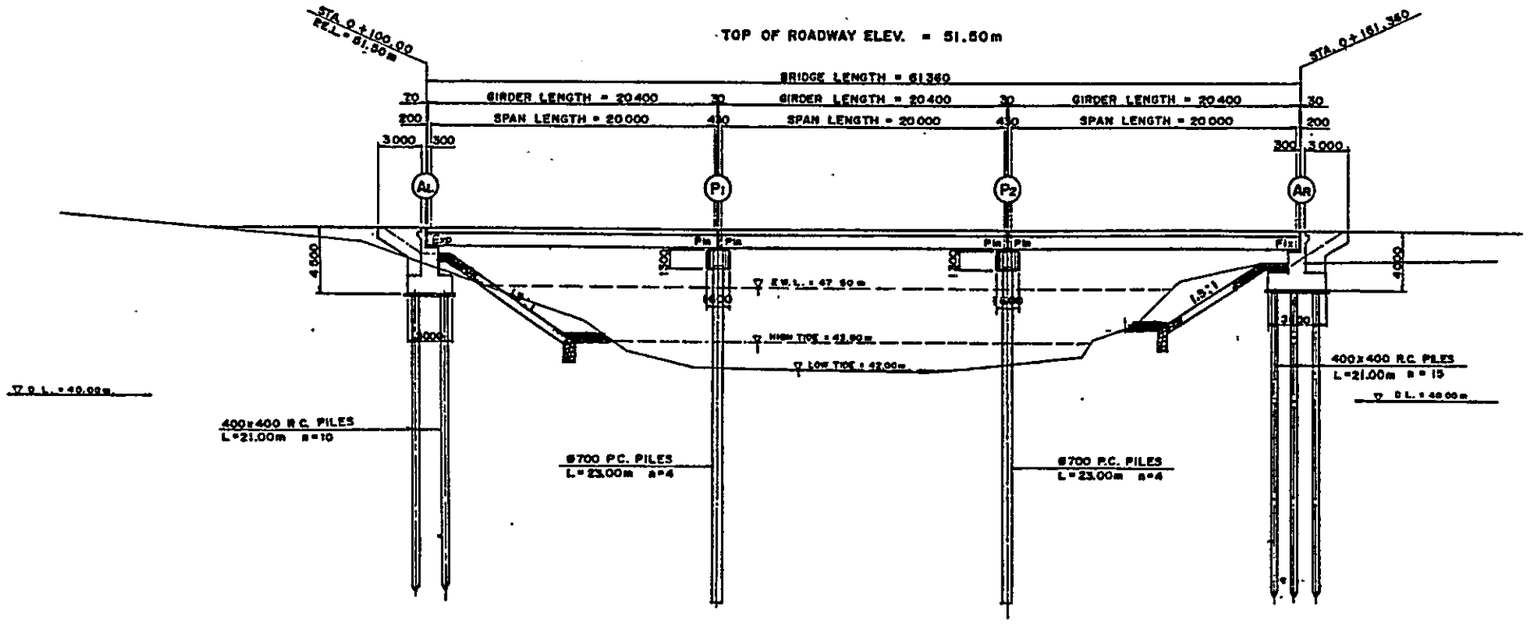

GENERAL ELEVATION
SCALE 1 : 200M

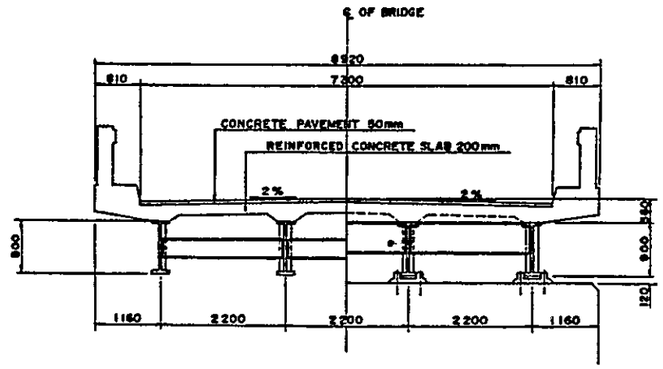

SUPERSTRUCTURE CROSS SECTION
SCALE 1 : 50M

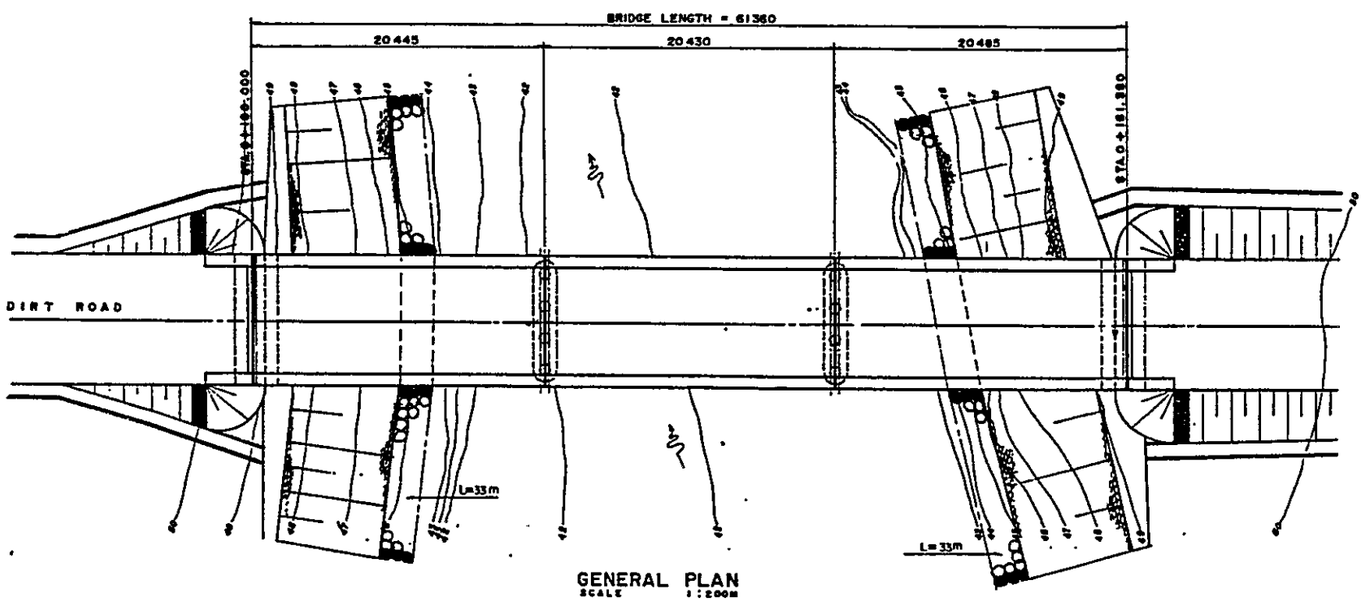

GENERAL PLAN
SCALE 1 : 200M

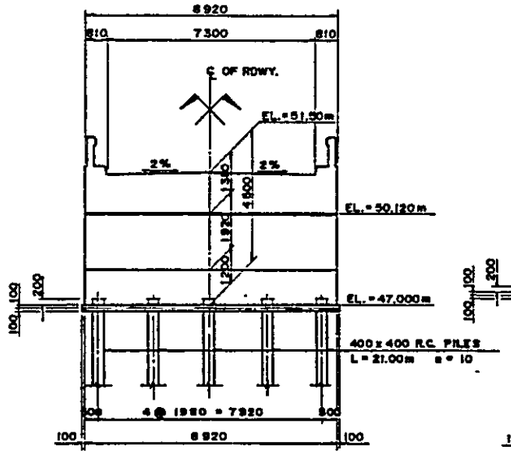

ABUTMENT (AL)
SCALE 1:100 M

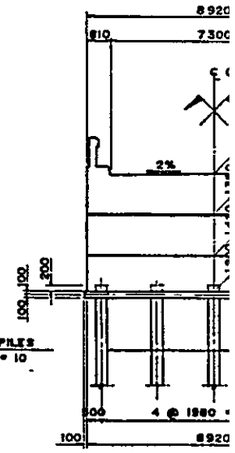

ABUTMEI
SCALE

BASIC DESIGN STUDY ON THE PROJECT FOR CONSTRUCTION OF BRIDGES ALONG RURAL ROADS IN MINDANAO AREA		
BRIDGE NO.	BRIDGE NAME	SHEET NO.
11-03-06	Mahan-Ub	23

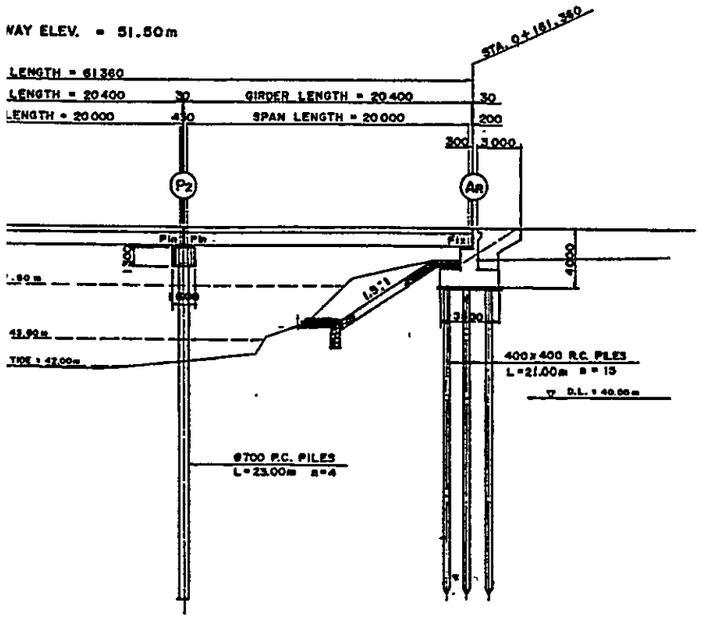

ELEVATION
1 : 200M

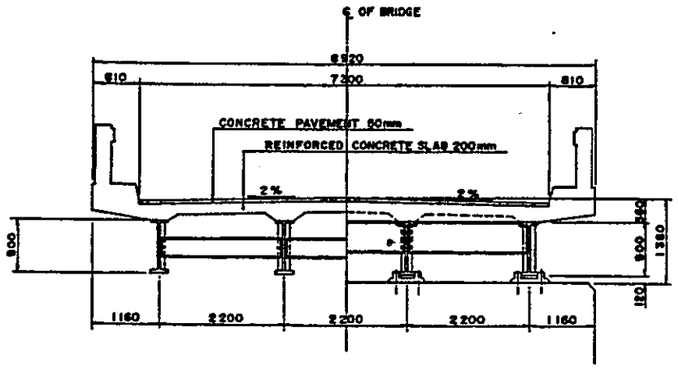

SUPERSTRUCTURE CROSS SECTION
SCALE 1 : 50M

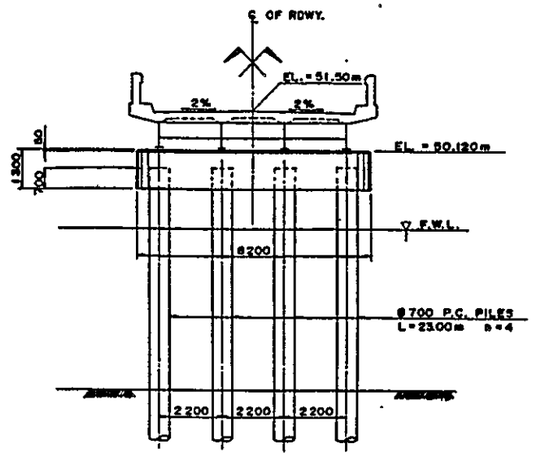

PIER (P1) (P2)
SCALE 1:100 M

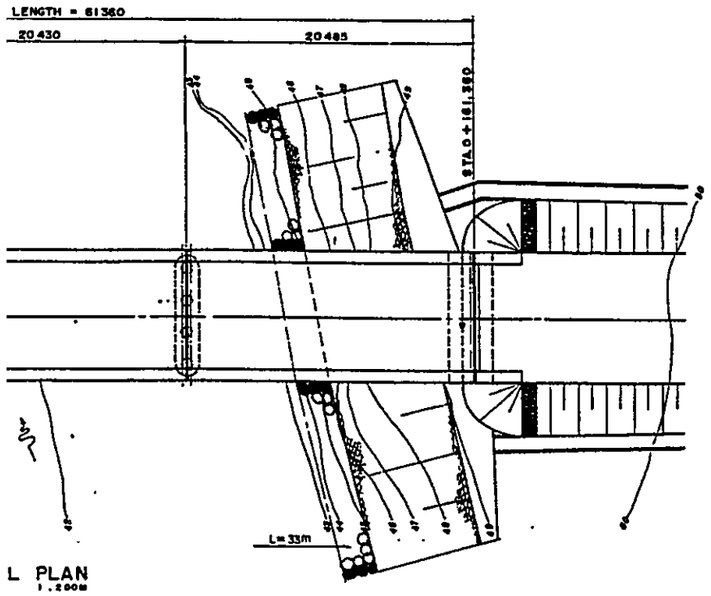

L PLAN
1 : 200M

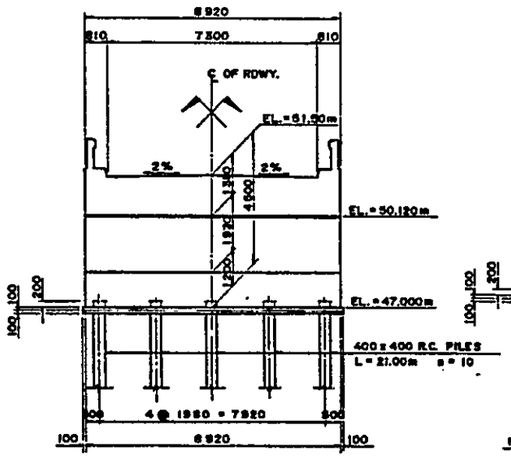

ABUTMENT (AL)
SCALE 1:100 M

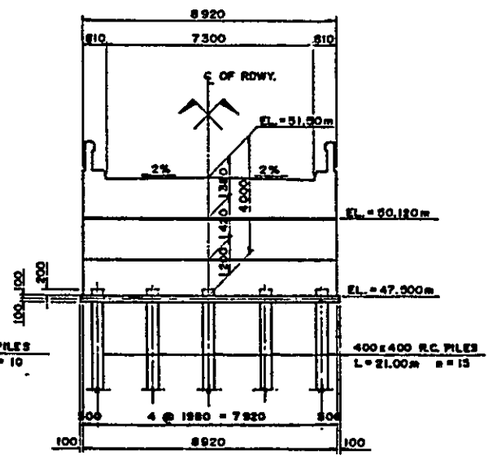

ABUTMENT (AR)
SCALE 1:100 M

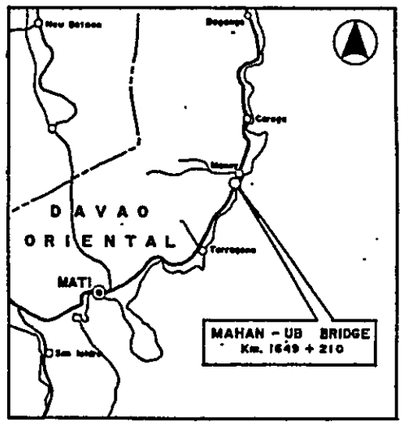

VICINITY MAP

FOR CONSTRUCTIO	
BRIDGE NO.	
11-05-02	

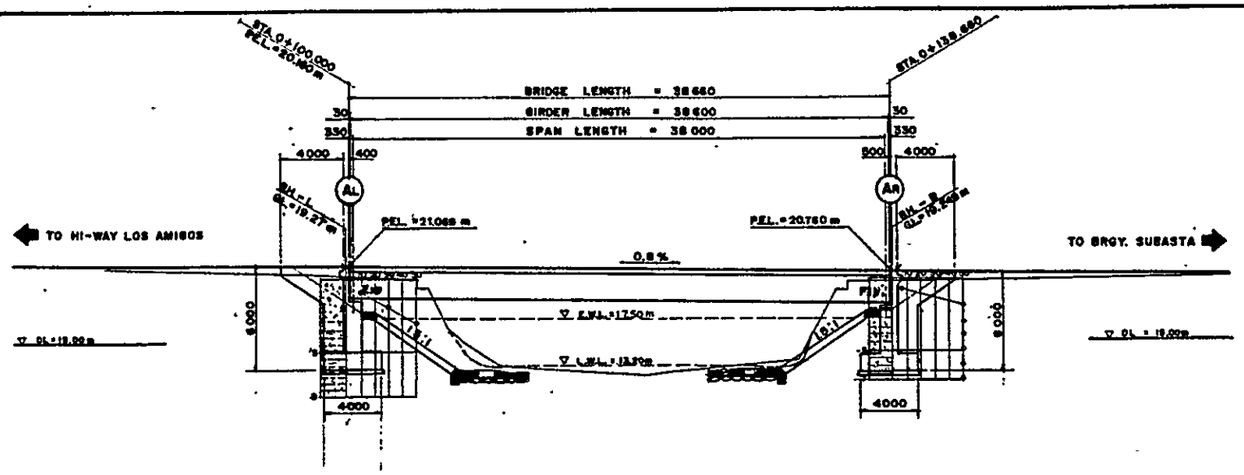

GENERAL ELEVATION
SCALE 1:200 M

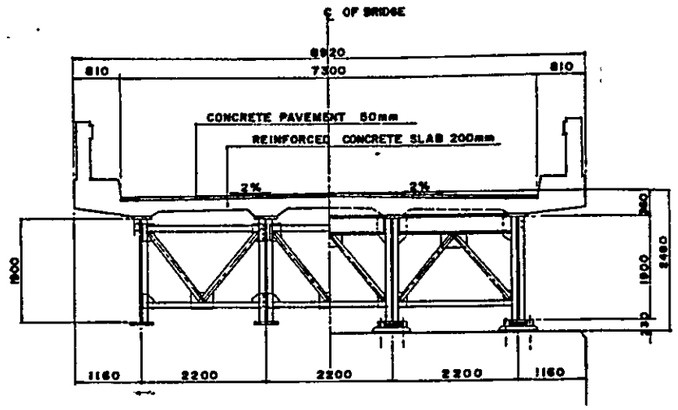

SUPERSTRUCTURE CROSS SECTION
SCALE 1:50 M.

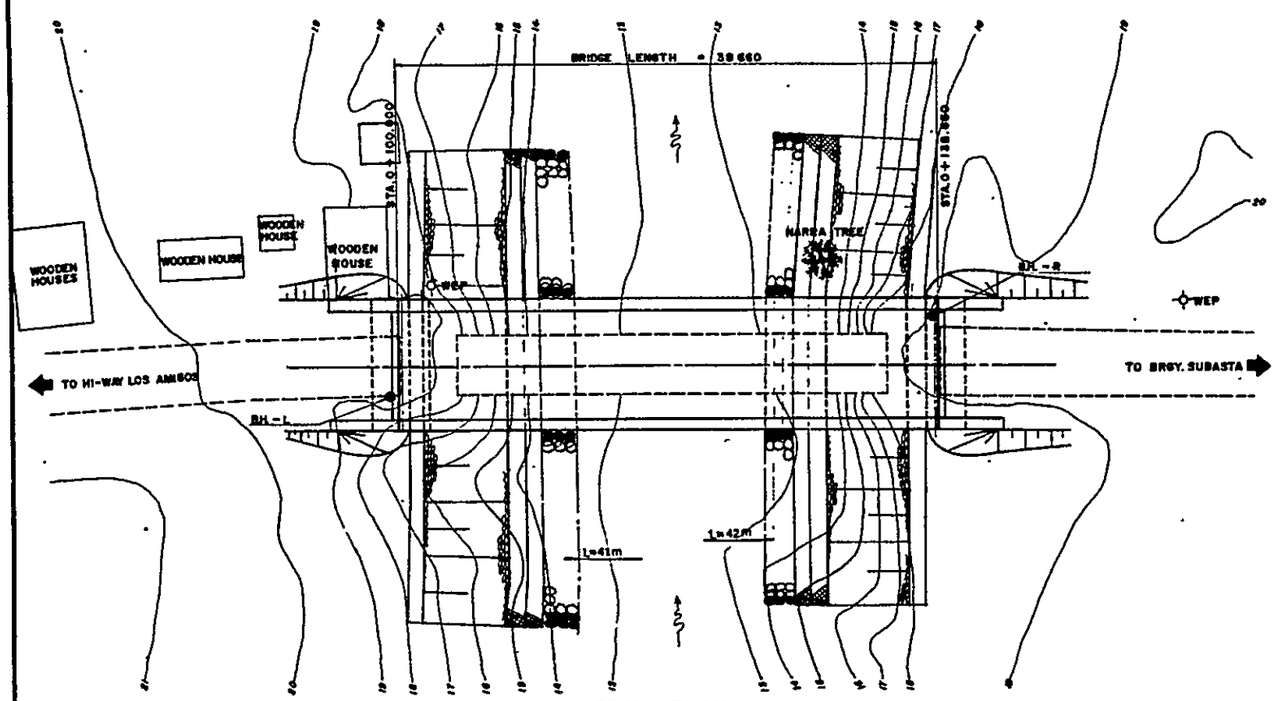

GENERAL PLAN
SCALE 1:200 M.

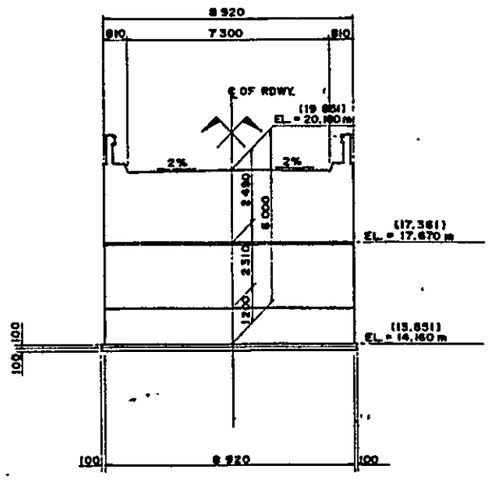

ABUTMENT AL & AR
SCALE 1:100 M

BASIC DESIGN STUDY ON THE PROJECT FOR CONSTRUCTION OF BRIDGES ALONG RURAL ROADS IN MINDANAO AREA		
BRIDGE NO.	BRIDGE NAME	SHEET NO.
11-05-02	Los Amigos	24

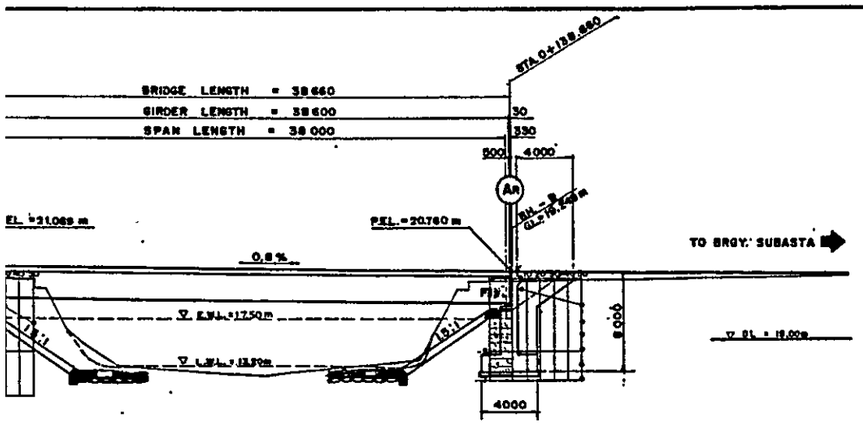

GENERAL ELEVATION
SCALE 1:200 M

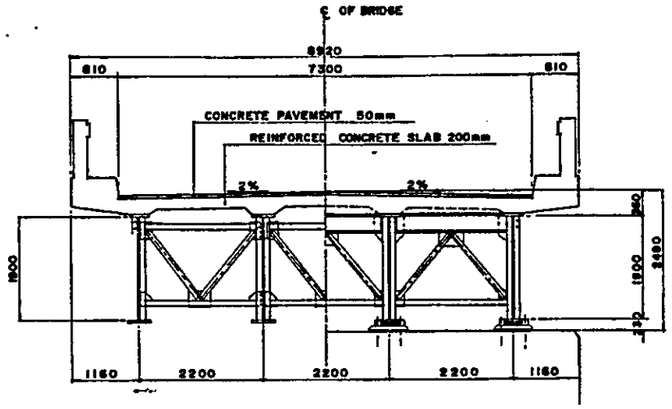

SUPERSTRUCTURE CROSS SECTION
SCALE 1:50 M.

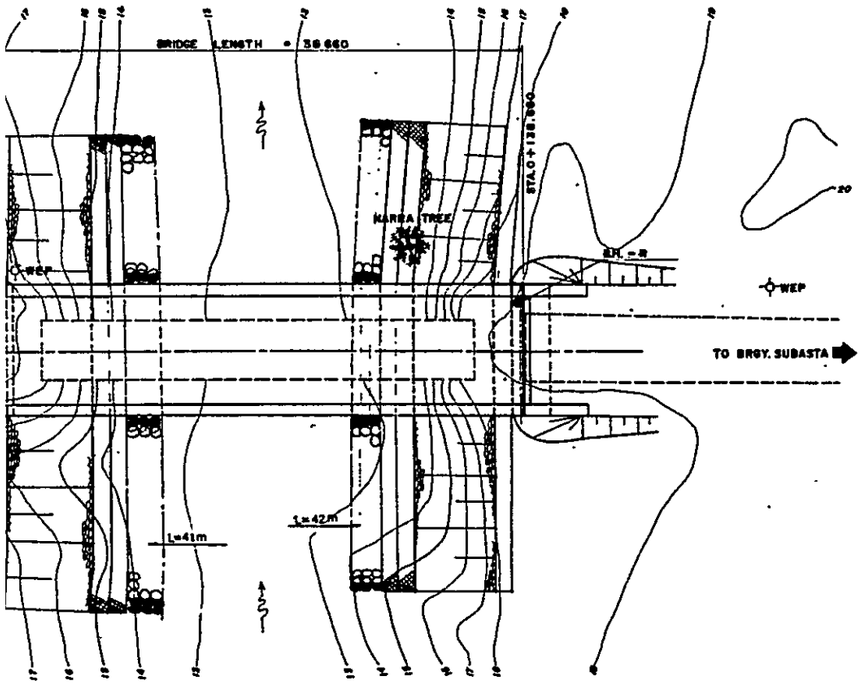

GENERAL PLAN
SCALE 1:200 M.

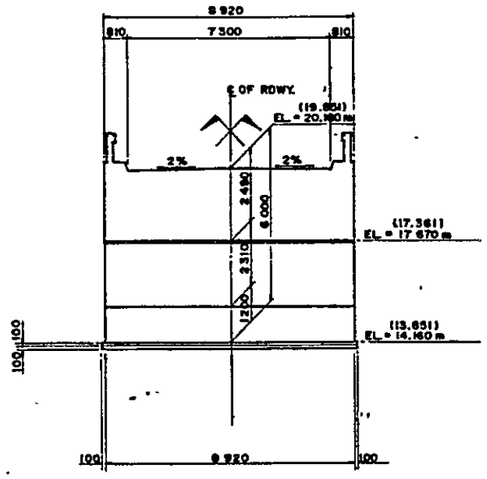

ABUTMENT (AL) & (AR)
SCALE 1:100 M

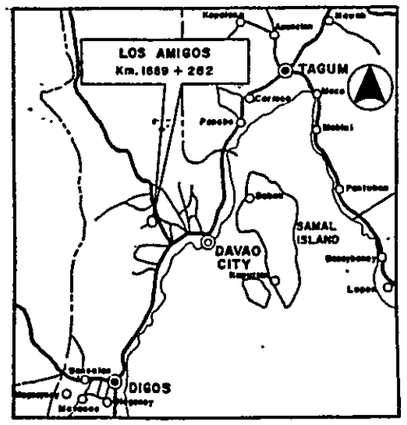

VICINITY MAP

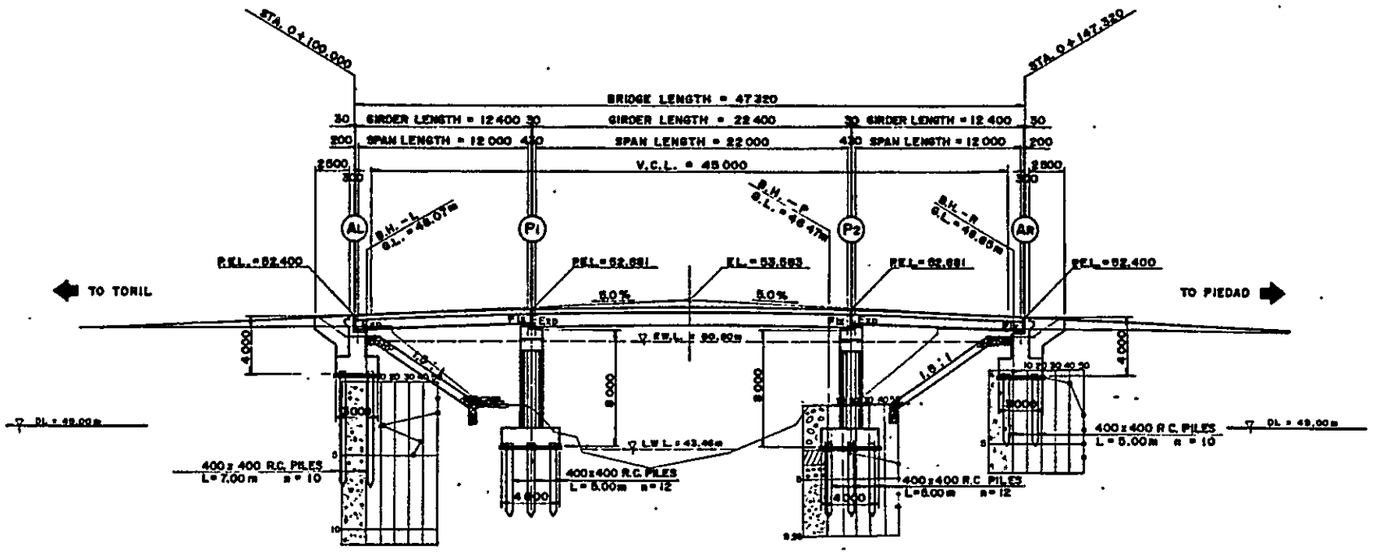

GENERAL ELEVATION
SCALE 1 : 200 M.

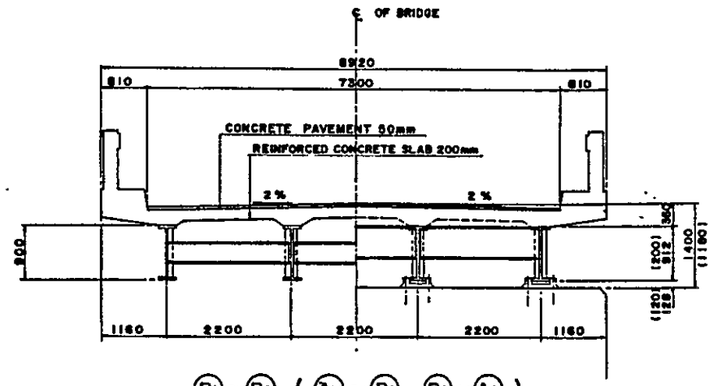

(P1)~(P2) ((AL)~(P1), (P2)~(AR))

SUPERSTRUCTURE CROSS SECTION
SCALE 1 : 100 M.

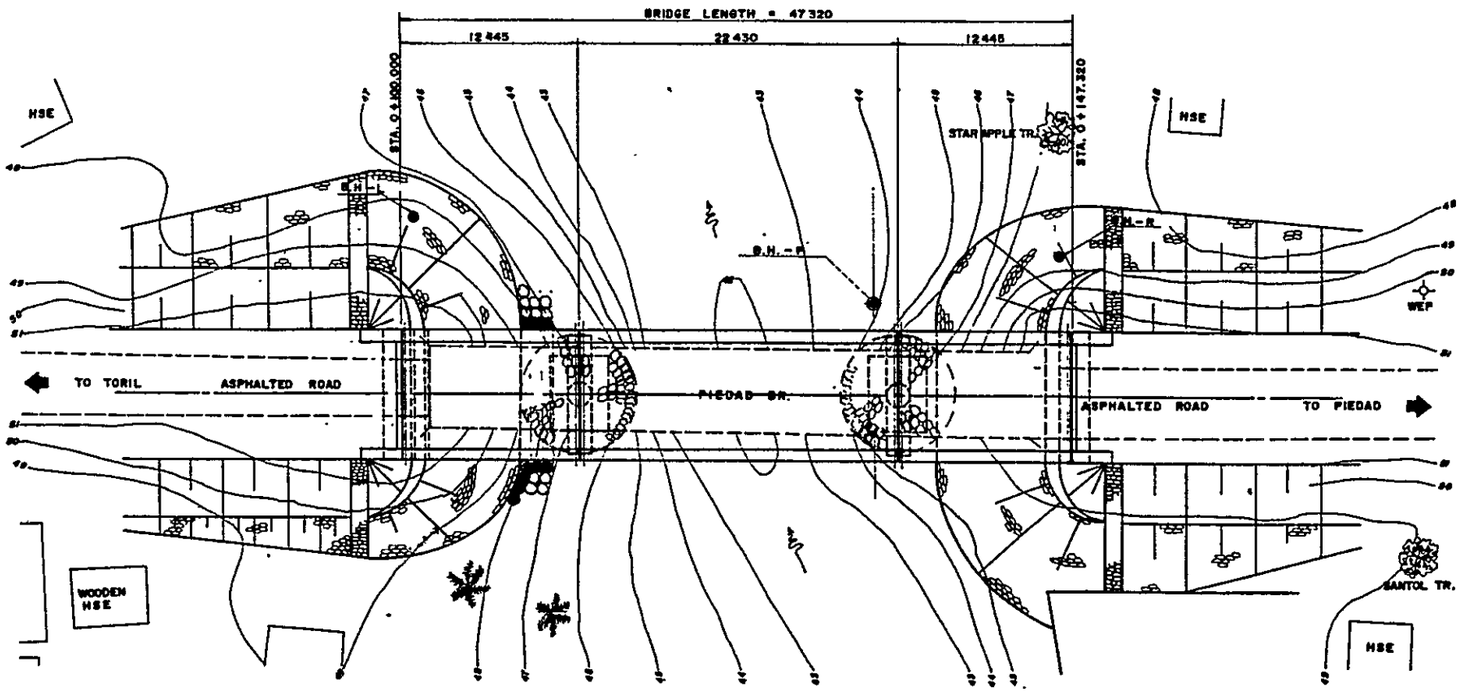

GENERAL PLAN
SCALE 1 : 200 M.

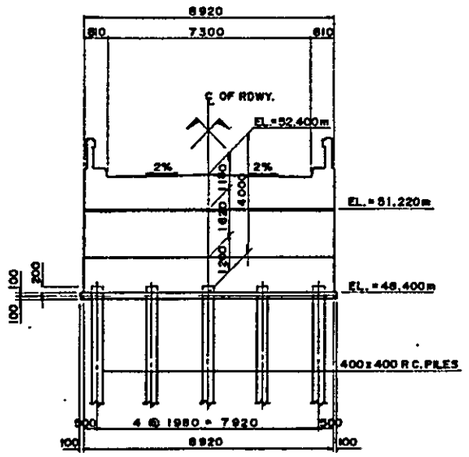

ABUTMENT (AL) & (AR)
SCALE 1 : 100 M.

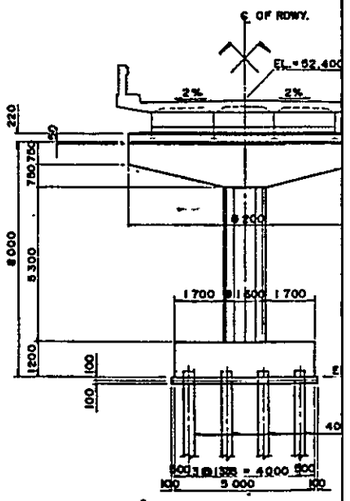

PIER (P1) & (P2)
SCALE 1 : 100 M.

BASIC DESIGN STUDY ON THE PROJECT FOR CONSTRUCTION OF BRIDGES ALONG RURAL ROADS IN MINDANAO AREA		
BRIDGE NO.	BRIDGE NAME	SHEET NO.
11-05-06	Piedad	25

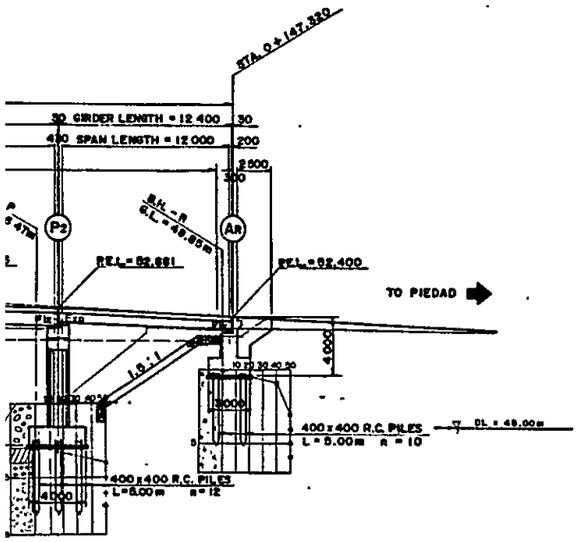

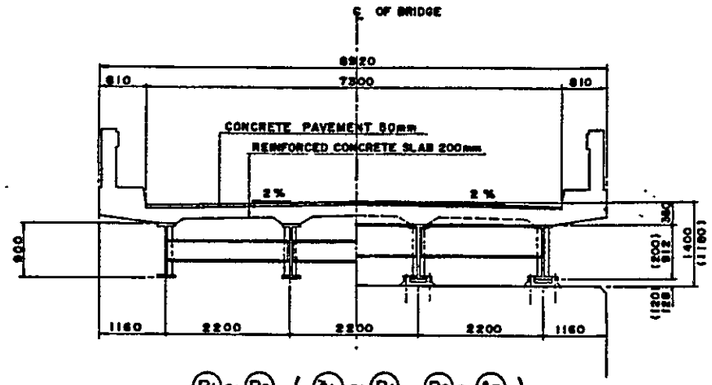

(P1)~(P2) ((AL)~(P1), (P2)~(AR))

SUPERSTRUCTURE CROSS SECTION

SCALE 1:100 M.

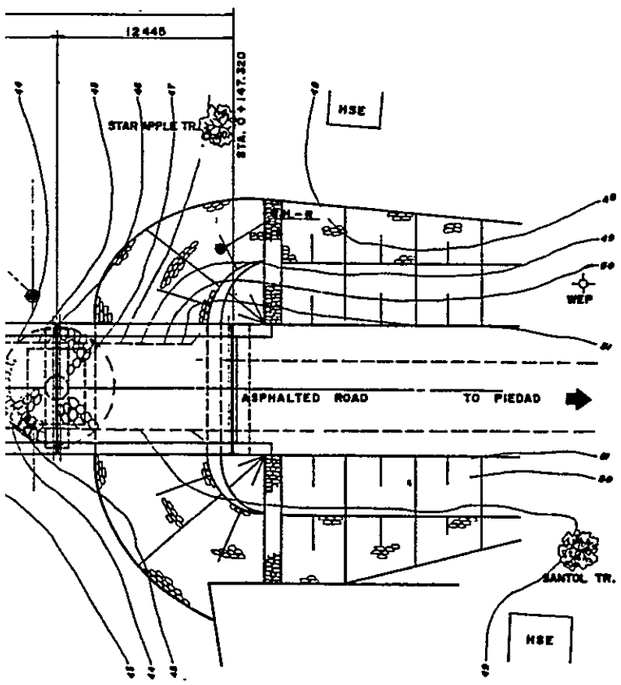

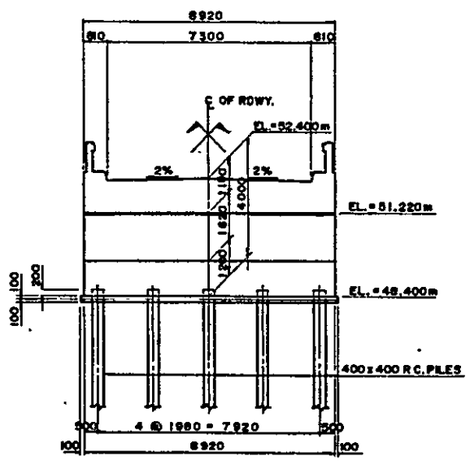

ABUTMENT (AL) & (AR)

SCALE 1:100 M.

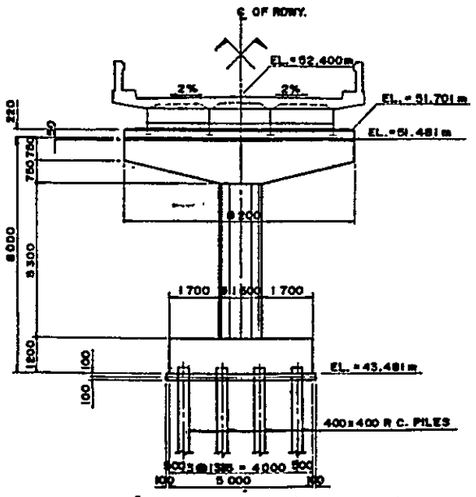

PIER (P1) & (P2)

SCALE 1:100 M.

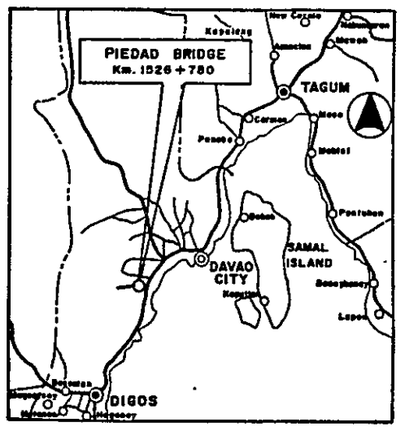

VICINITY MAP

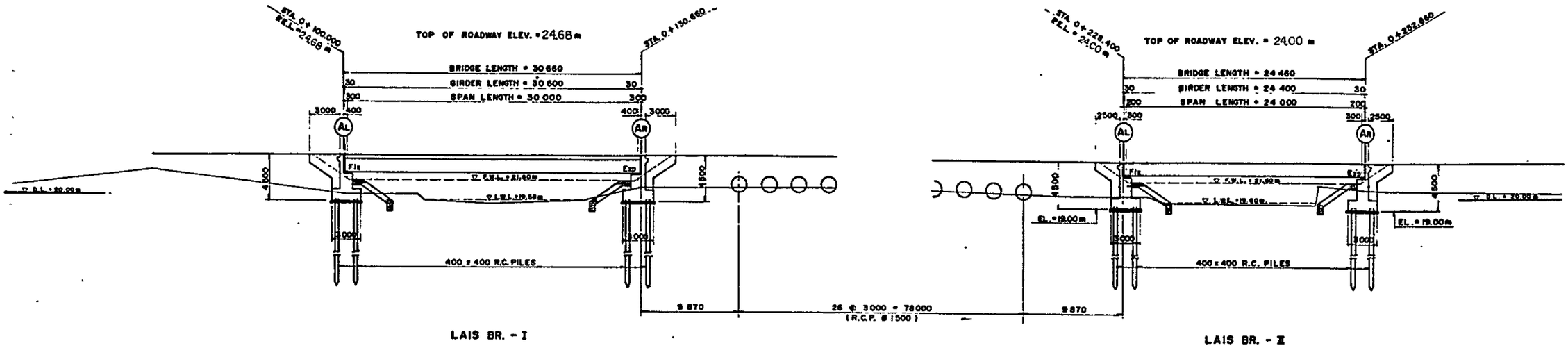

GENERAL ELEVATION
SCALE 1 : 200 m

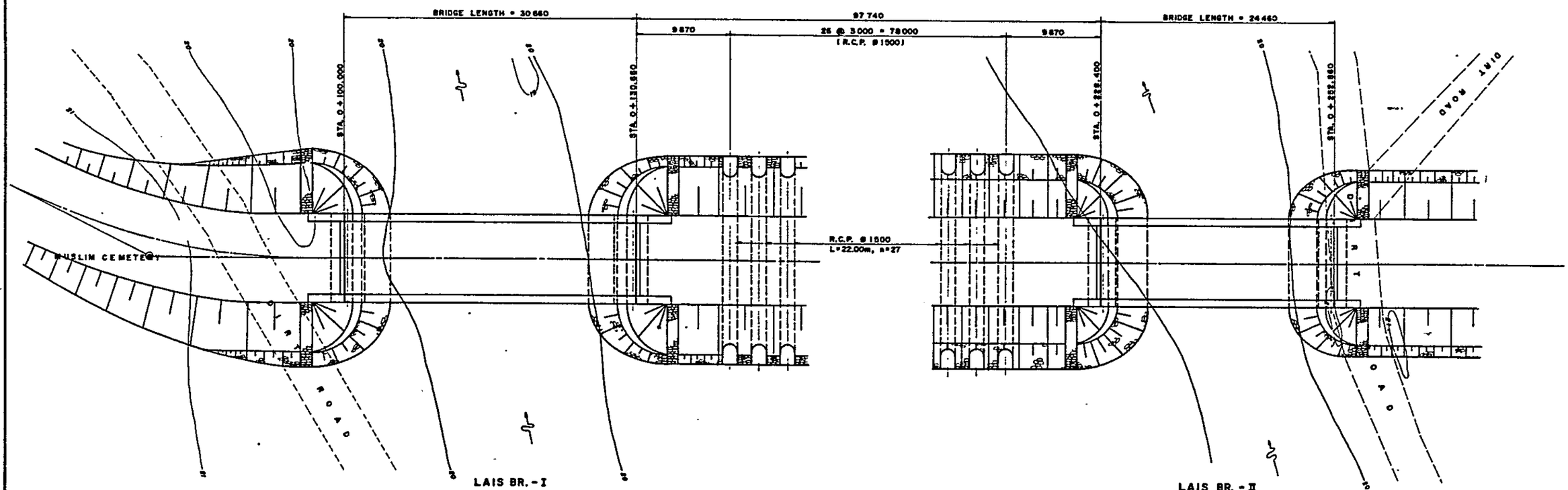

GENERAL PLAN
SCALE 1 : 200 m

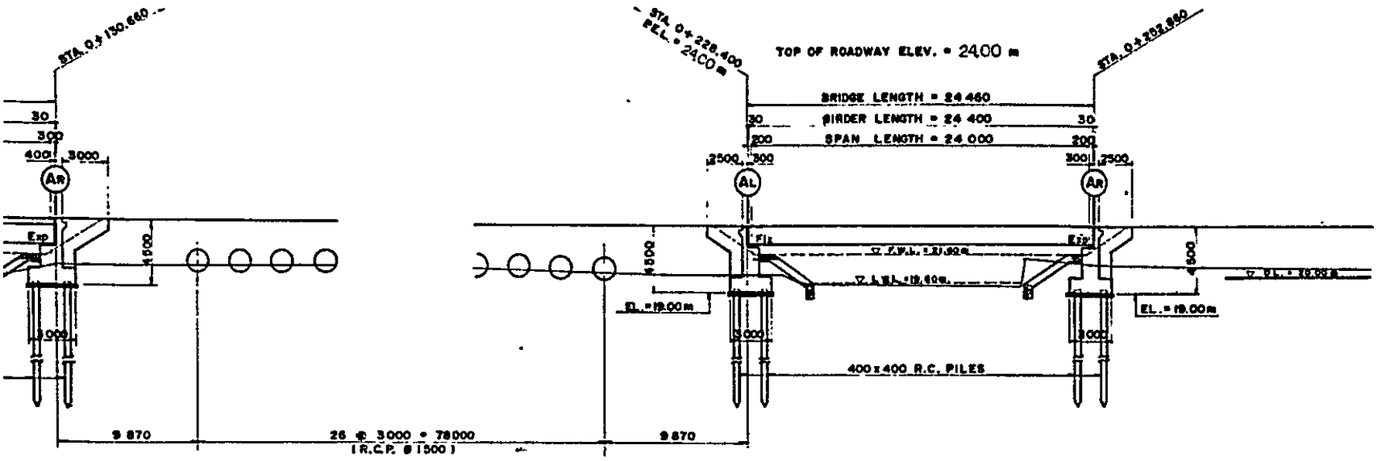

GENERAL ELEVATION
SCALE 1 : 200 M

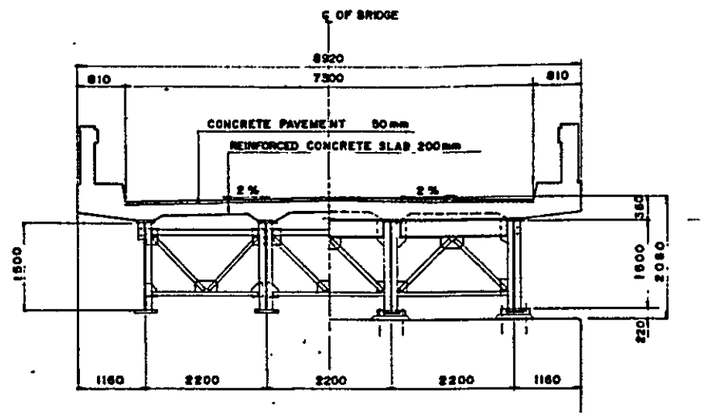

SUPERSTRUCTURE CROSS SECTION
SCALE 1 : 50 M

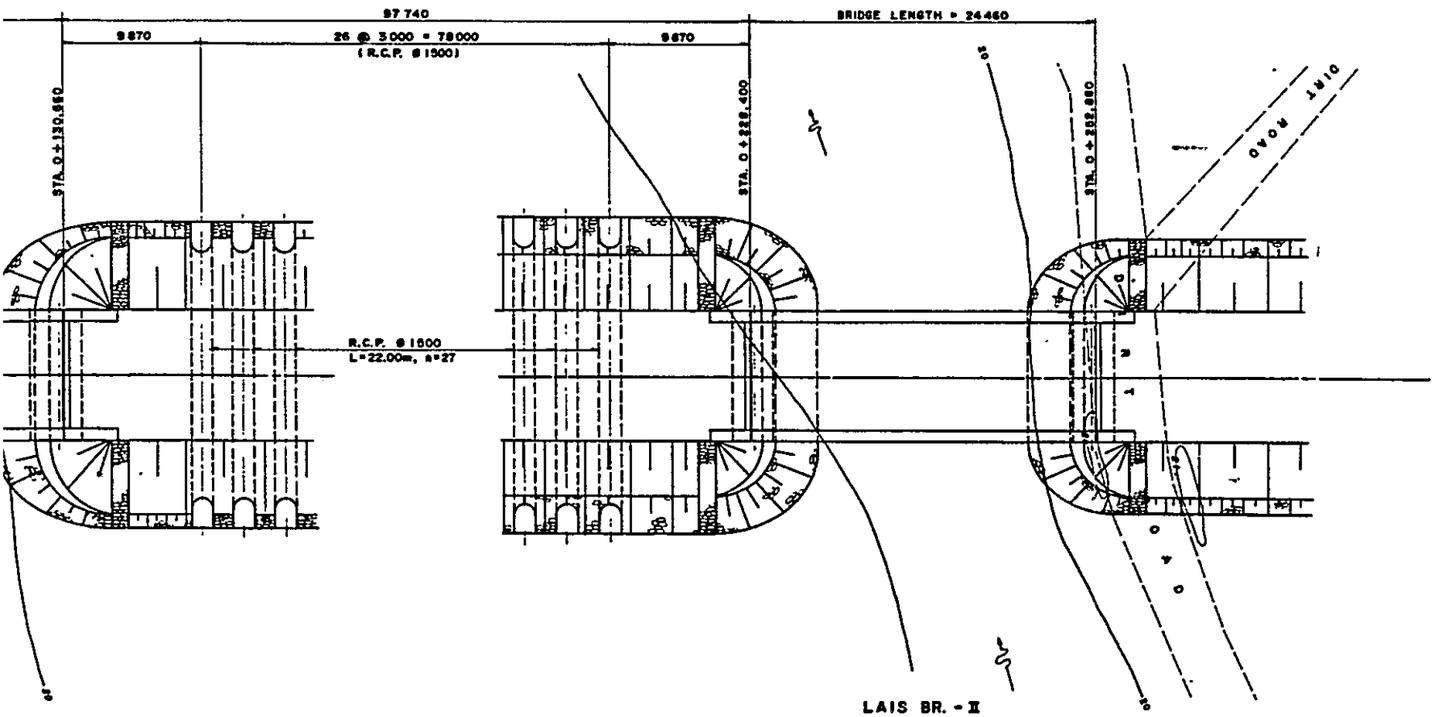

GENERAL PLAN
SCALE 1 : 200 M

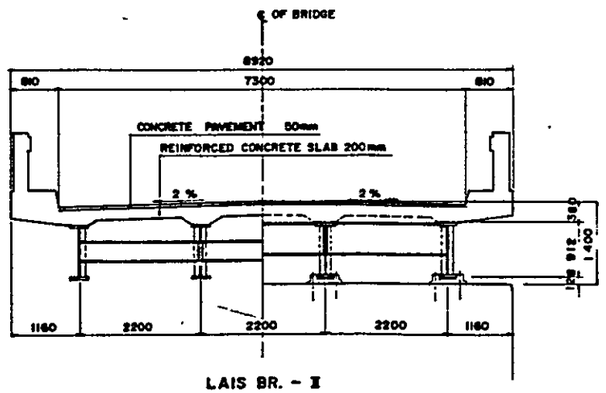

SUPERSTRUCTURE CROSS SECTION
SCALE 1 : 50 M

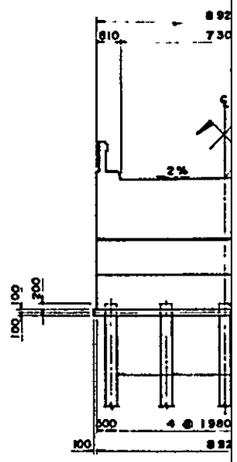

LAIS B

ABUTMENT
SCALE

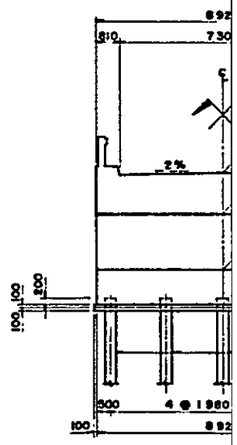

LAIS BR

ABUTMENT
SCALE

BASIC DESIGN STUDY ON THE PROJECT FOR CONSTRUCTION OF BRIDGES ALONG RURAL ROADS IN MINDANAO AREA		
BRIDGE NO.	BRIDGE NAME	SHEET NO.
11-05-07	LAIS	26

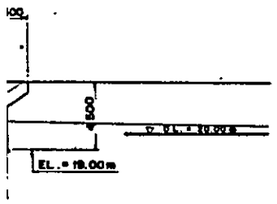

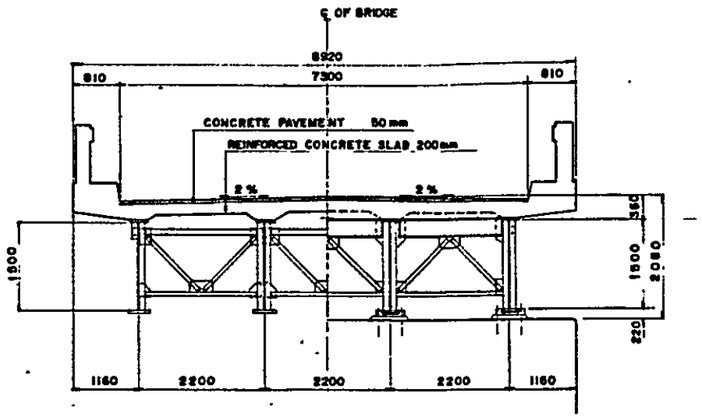

LAIS BR.- I

SUPERSTRUCTURE CROSS SECTION

SCALE 1:50 M

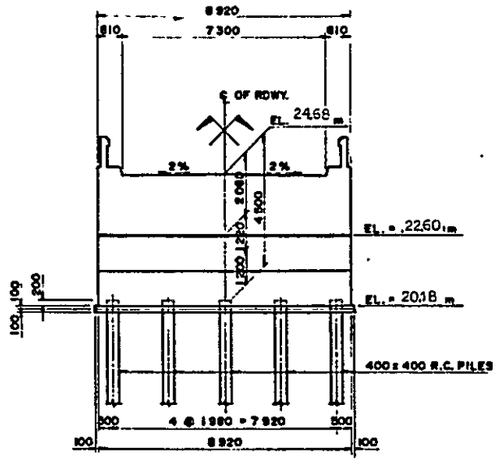

LAIS BR. - I

ABUTMENT (AL) & (AR)

SCALE 1:100 M

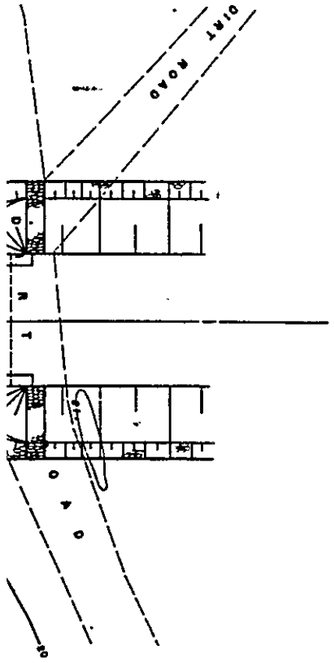

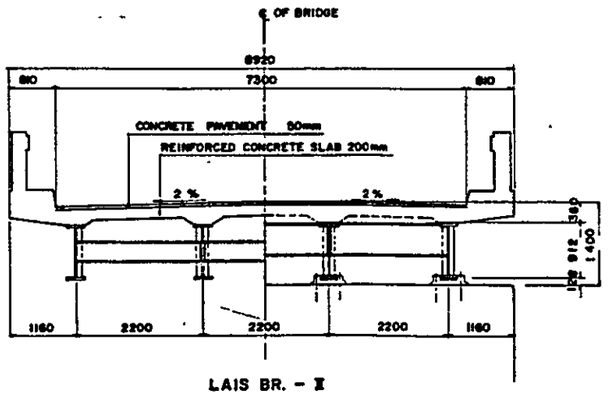

LAIS BR. - II

SUPERSTRUCTURE CROSS SECTION

SCALE 1:50 M

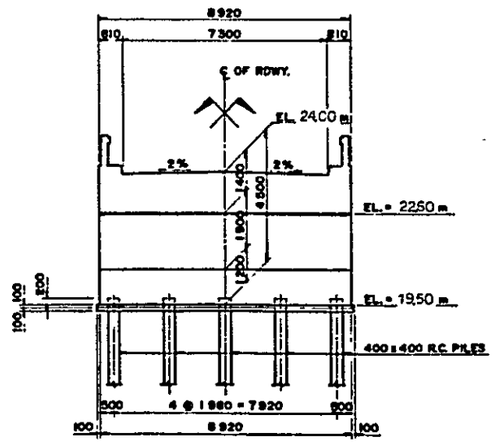

LAIS BR. - II

ABUTMENT (AL) & (AR)

SCALE 1:100 M

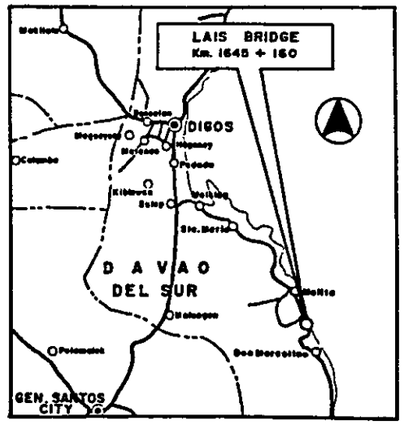

VICINITY MAP

BASIC DESIGN STUDY ON THE PROJECT FOR CONSTRUCTION OF BRIDGES ALONG RURAL ROADS IN MINDANAO AREA		
BRIDGE NO.	BRIDGE NAME	SHEET NO.
11-06-02	Baliton	27

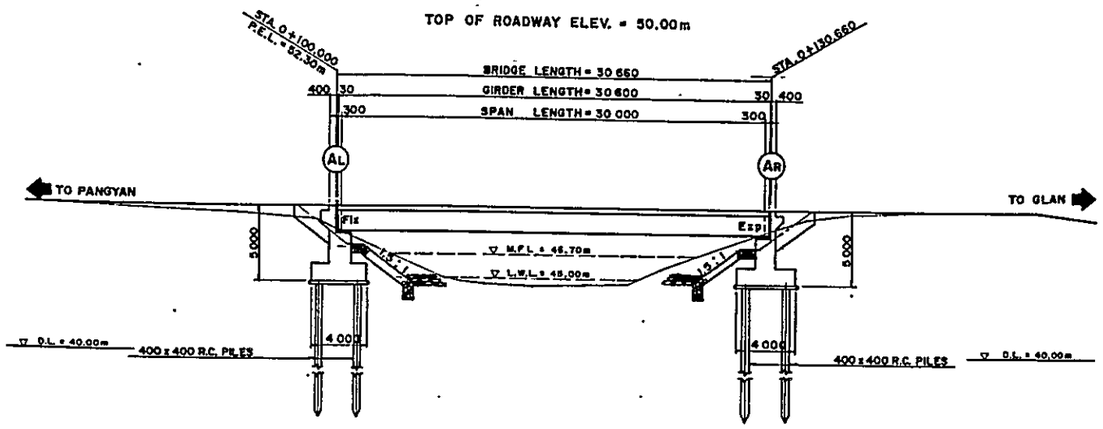

GENERAL ELEVATION
SCALE 1:200 M

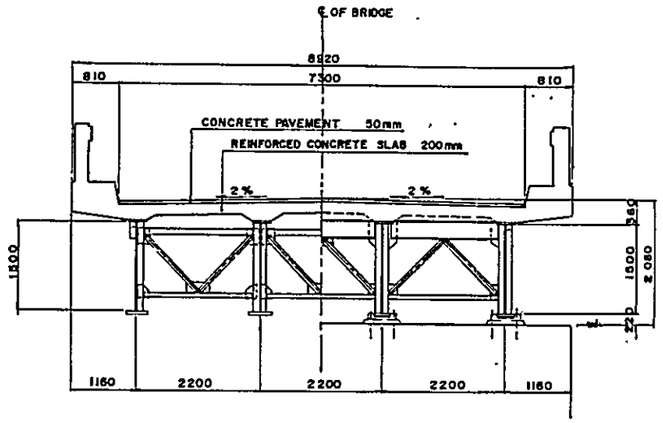

SUPERSTRUCTURE CROSS SECTION
SCALE 1:50 M

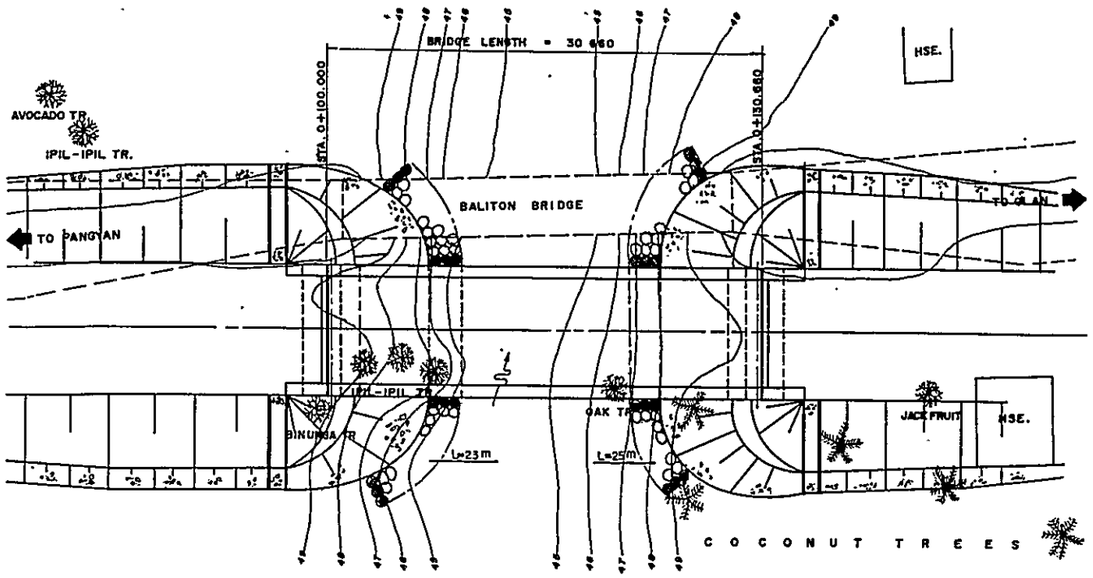

GENERAL PLAN
SCALE 1:200M

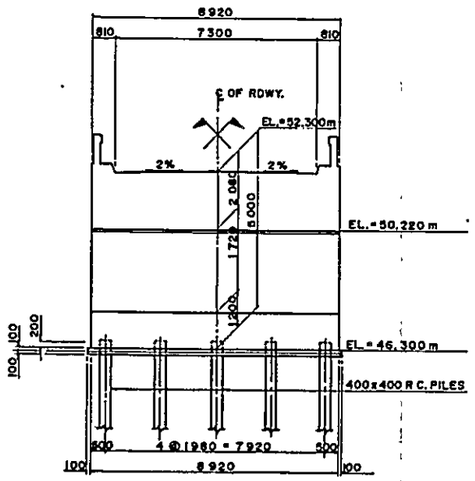

ABUTMENT (AL) & (AR)
SCALE 1:100 M

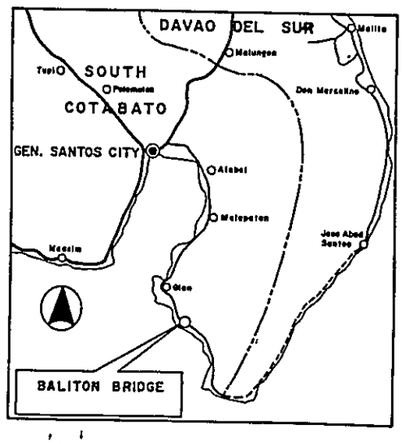

VICINITY MAP

BASIC DESIGN STUDY ON THE PROJECT FOR CONSTRUCTION OF BRIDGES ALONG RURAL ROADS IN MINDANAO AREA		
BRIDGE NO.	BRIDGE NAME	SHEET NO.
11-06-03	PANGYAN	28

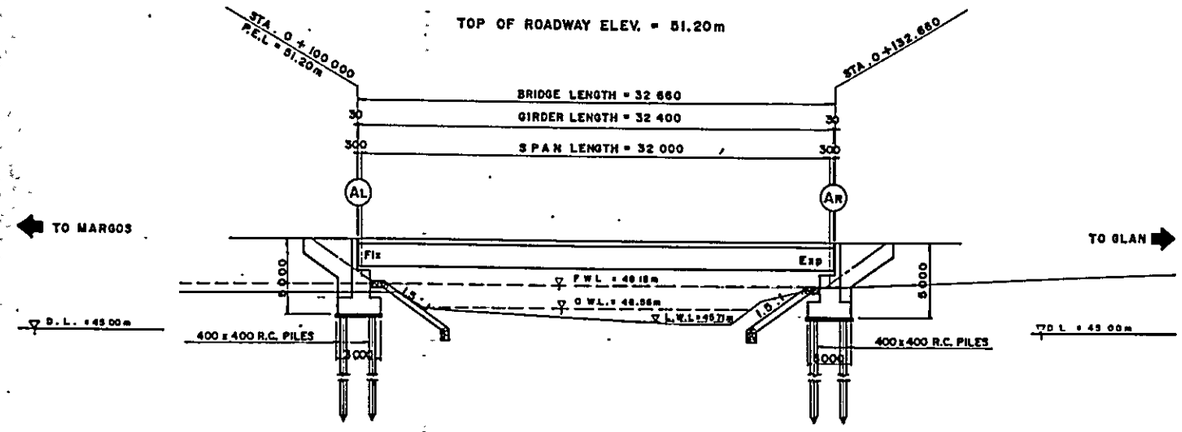

GENERAL ELEVATION
SCALE 1:200 M

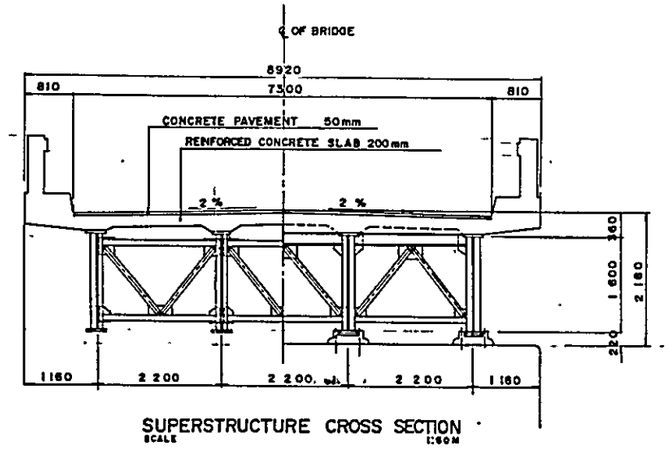

SUPERSTRUCTURE CROSS SECTION
SCALE 1:60M

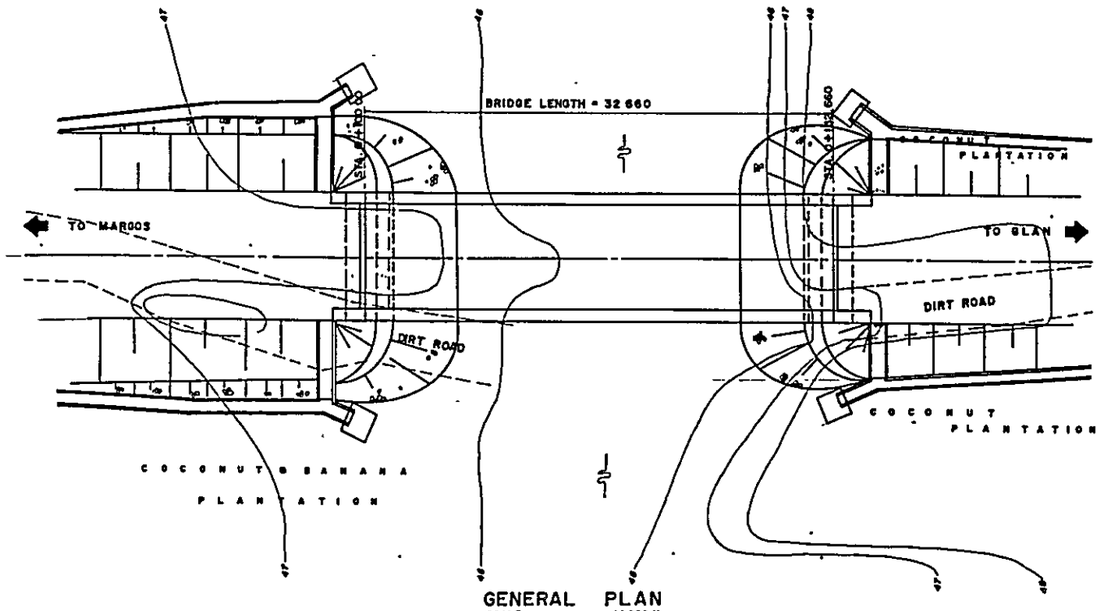

GENERAL PLAN
SCALE 1:200 M

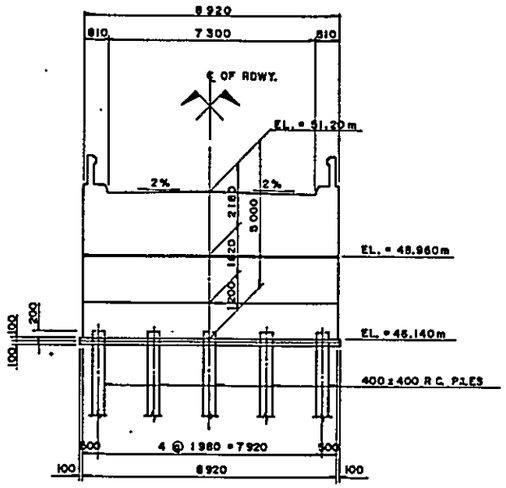

ABUTMENT AL & AR
SCALE 1:100 M

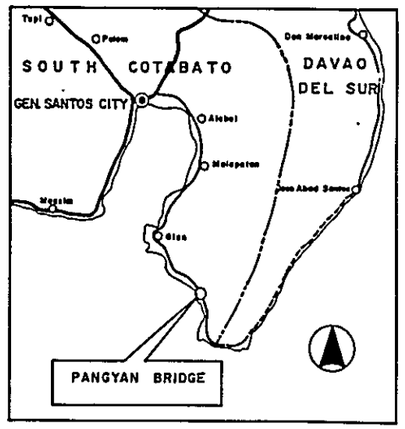

VICINITY MAP