PART IV APPENDIX

1. STRUCTURAL ANALYSIS OF INLET PORTAL SECTION A -A

Fig. 1.1.2

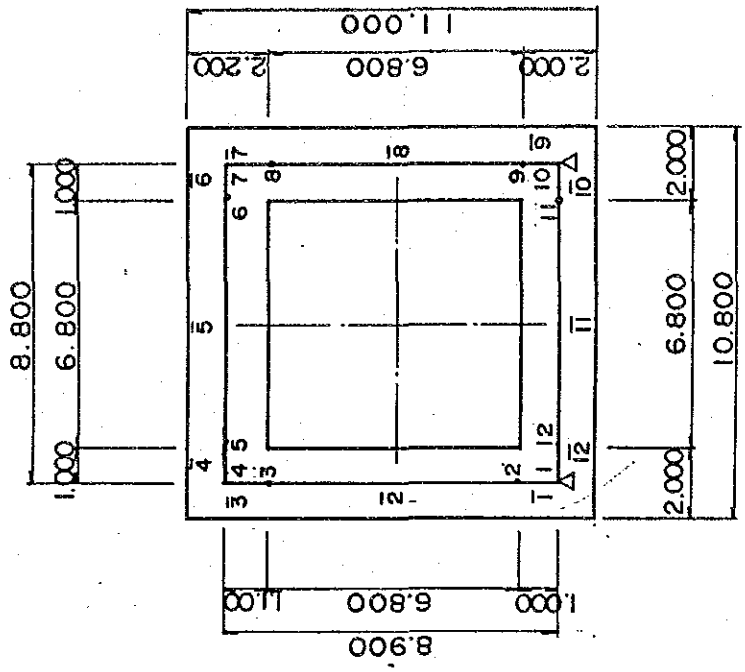

SECTION B - B

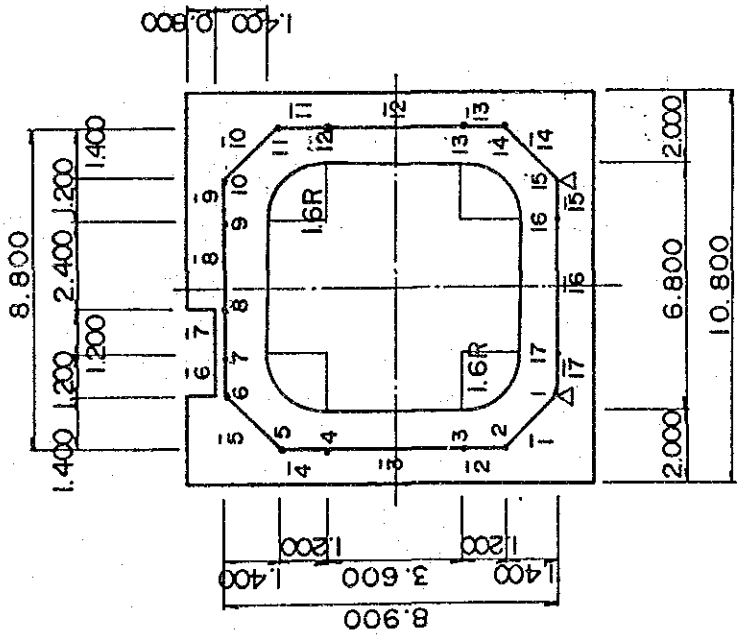

SECTION A - A

Section and dimension of inlet portal

GOVERNMENT OF MAURITIUS
PORT LOUIS WATER SUPPLY PROJECT
JAPAN INTERNATIONAL COOPERATION AGENCY

Fig. 1.1.3

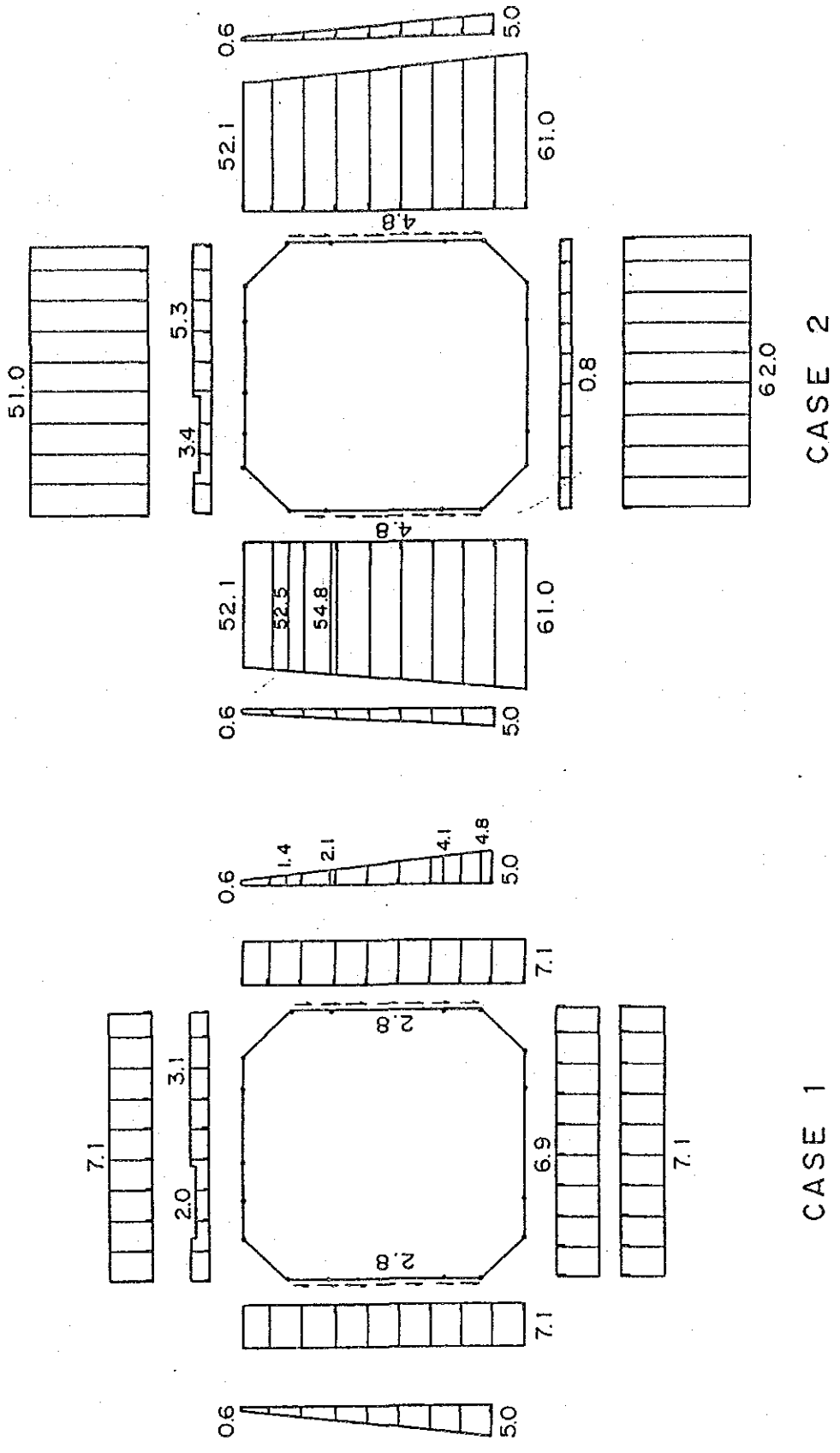

Loading diagram of inlet portal (section A-A)

GOVERNMENT OF MAURITIUS
PORT LOUIS WATER SUPPLY PROJECT
JAPAN INTERNATIONAL COOPERATION AGENCY

Fig. 1.1.5

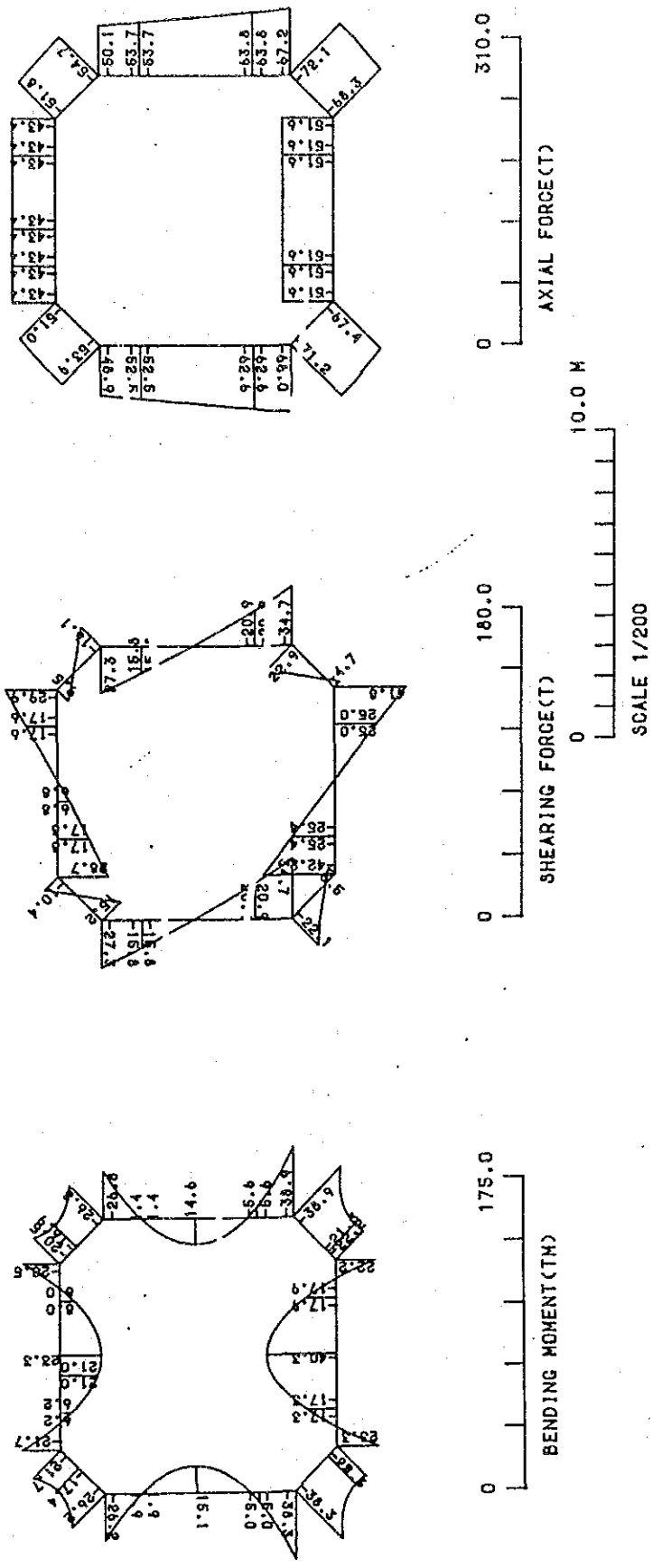

Bending moment shearing and axial force diagram
inlet portal section A-A (case -1)

GOVERNMENT OF MAURITIUS
PORT LOUIS WATER SUPPLY PROJECT

JAPAN INTERNATIONAL COOPERATION AGENCY

Fig. 1.1.6

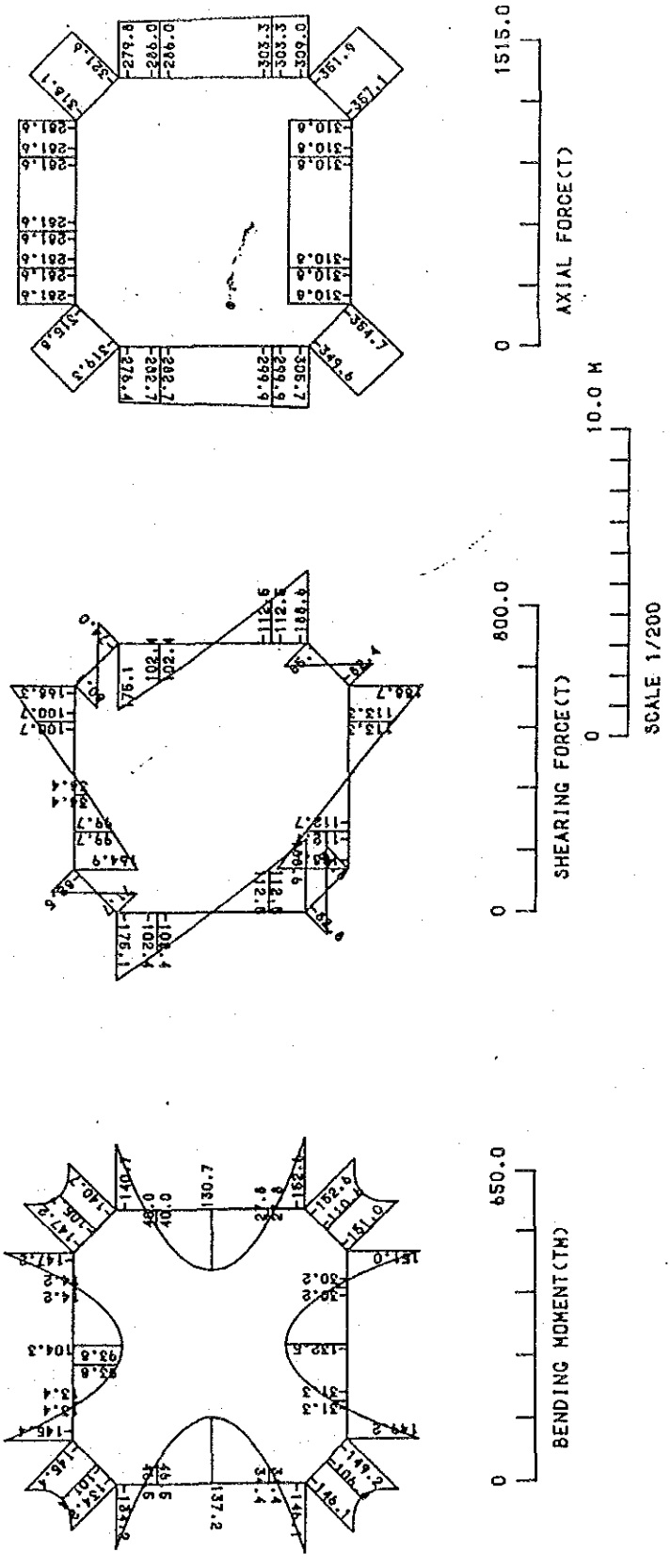

Bending moment shearing and axial force diagram
inlet portal section A-A (case -2)

GOVERNMENT OF MAURITIUS
PORT LOUIS WATER SUPPLY PROJECT

JAPAN INTERNATIONAL COOPERATION AGENCY

Parameter information

	Input	(Max. size)
NODAL POINT NUMBER (INP)-----	17	(100)
ELEMENT NUMBER (IEL)---------	17	(100)
MATERIAL NUMBER (IPR)--------	1	(10)
PROPATYL NUMBER (INA)--------	3	(10)

Parameter set is OK. But you can reset Max. size to input.

```
*****************************************************************************
*****                    FRAME ANALYSIS                                 *****
*****          Inlet Portal    Section A - A                            *****
*****                    INPUT DATA LIST                                *****
*****************************************************************************
```

```
NUMBER OF NODAL POINT--------------   17
NUMBER OF ELEMENT------------------   17
NUMBER OF MATERIAL PROPATIES-------    1
NUMBER OF ELEMENT  PROPATIES-------    3
CASE NUMBER OF LOAD CONDITION------    2
NUMBER OF ELASTIC SUPPORT----------    0
TOLERANCE(DEFAULT=1.E-5) ----------   1.000E-05
```

MATERIAL NO.	ELASTIC MODULUS
1	2.550000E+06

E.P.NO.	SECTIONAL AREA	MOMENT OF INAT.
1	2.200000E+00	8.873000E-01
2	2.000000E+00	6.667000E-01
3	1.400000E+00	2.287000E-01

****
***** DATA OF NODAL POINT *****
****

NODAL NO.	X-COORDINATE	Y-COORDINATE	D(X)	D(Y)	D(R)
1	1.4000	8.9000	1	1	0
2	0.0000	7.5000	0	0	0
3	0.0000	6.3000	0	0	0
4	0.0000	2.7000	0	0	0
5	0.0000	1.4000	0	0	0
6	1.4000	0.0000	0	0	0
7	2.6000	0.0000	0	0	0
8	3.8000	0.0000	0	0	0
9	6.2000	0.0000	0	0	0
10	7.4000	0.0000	0	0	0
11	8.8000	1.4000	0	0	0
12	8.8000	2.7000	0	0	0
13	8.8000	6.3000	0	0	0
14	8.8000	7.5000	0	0	0
15	7.4000	8.9000	0	1	0
16	6.2000	8.9000	0	0	0
17	2.6000	8.9000	0	0	0

****
***** DATA OF ELEMENT *****
****

ELEMENT NO.	JOINT(I)	JOINT(J)	MAT.PR.	EL.PR.	CODE	E	A	I
1	1	2	1	2	0	2.55000E+06	2.00000E+00	6.66700E-01
2	2	3	1	2	0	2.55000E+06	2.00000E+00	6.66700E-01
3	3	4	1	2	0	2.55000E+06	2.00000E+00	6.66700E-01
4	4	5	1	2	0	2.55000E+06	2.00000E+00	6.66700E-01
5	5	6	1	1	0	2.55000E+06	2.20000E+00	8.87300E-01
6	6	7	1	3	0	2.55000E+06	1.40000E+00	2.28700E-01
7	7	8	1	3	0	2.55000E+06	1.40000E+00	2.28700E-01
8	8	9	1	1	0	2.55000E+06	2.20000E+00	8.87300E-01
9	9	10	1	1	0	2.55000E+06	2.20000E+00	8.87300E-01
10	10	11	1	1	0	2.55000E+06	2.20000E+00	8.87300E-01
11	11	12	1	2	0	2.55000E+06	2.00000E+00	6.66700E-01
12	12	13	1	2	0	2.55000E+06	2.00000E+00	6.66700E-01
13	13	14	1	2	0	2.55000E+06	2.00000E+00	6.66700E-01
14	14	15	1	2	0	2.55000E+06	2.00000E+00	6.66700E-01
15	16	15	1	2	0	2.55000E+06	2.00000E+00	6.66700E-01
16	17	16	1	2	0	2.55000E+06	2.00000E+00	6.66700E-01
17	1	17	1	2	0	2.55000E+06	2.00000E+00	6.66700E-01

ORIGINAL BAND WIDTH = 51
FINAL BAND WIDTH = 51

****
***** DATA LIST OF EXTERNAL LOAD *****
****

LOAD CASE= 1

ELEMENT NO.	TYPE	P	Q	XA	XB	ANGLE
1	2	7.100	7.100	0.000	0.000	-45.000
1	2	5.000	4.800	1.414	0.000	-45.000
1	2	14.000	14.000	0.000	0.000	45.000
1	2	-2.800	-2.800	0.000	0.000	45.000
2	2	11.900	11.200	0.000	0.000	0.000
2	2	2.800	2.800	0.000	0.000	-90.000
3	2	11.200	9.200	0.000	0.000	0.000
3	2	2.800	2.800	0.000	0.000	-90.000
4	2	9.200	8.500	0.000	0.000	0.000
4	2	2.800	2.800	0.000	0.000	-90.000
5	2	8.500	7.700	0.000	0.000	45.000
5	2	10.200	10.200	0.000	0.000	-45.000
6	2	9.100	9.100	0.000	0.000	0.000
7	2	9.100	9.100	0.000	0.000	0.000
8	2	10.200	10.200	0.000	0.000	0.000
9	2	10.200	10.200	0.000	0.000	0.000
10	2	10.200	10.200	0.000	0.000	45.000
10	2	7.700	8.500	0.000	0.000	-45.000
11	2	8.500	9.200	0.000	0.000	0.000
11	2	2.800	2.800	0.000	0.000	90.000
12	2	9.200	11.200	0.000	0.000	0.000
12	2	2.800	2.800	0.000	0.000	90.000
13	2	11.200	11.900	0.000	0.000	0.000
13	2	2.800	2.800	0.000	0.000	90.000
14	2	7.100	7.100	0.000	0.000	45.000
14	2	4.800	5.000	0.000	1.414	45.000
14	2	14.000	14.000	0.000	0.000	-45.000
14	2	-2.800	-2.800	0.000	0.000	-45.000
15	2	-14.000	-14.000	0.000	0.000	0.000
16	2	-14.000	-14.000	0.000	0.000	0.000
17	2	-14.000	-14.000	0.000	0.000	0.000

****
***** Inlet Portal Section A - A *****
***** DISPLACEMENT AND REACTION *****
****

JOINT	DISPLACEMENT			REACTION		
	X-DIRECTION	Y-DIRECTION	R-DIRECTION	X-DIRECTION	Y-DIRECTION	R-DIRECTION
1	0.000000E+00	0.000000E+00	-3.367891E-05	9.536743E-06	-1.588106E+00	-
2	-8.458034E-06	4.689531E-05	-3.001768E-06	-	-	-
3	-1.128855E-06	6.201806E-05	1.130254E-05	-	-	-
4	7.579098E-06	1.026428E-04	-8.755964E-06	-	-	-
5	-7.121232E-07	1.155642E-04	-4.078325E-07	-	-	-
6	-1.842855E-06	1.406438E-04	1.684947E-05	-	-	-
7	-1.642398E-05	1.747803E-04	3.049024E-05	-	-	-
8	-3.100511E-05	1.962824E-04	2.861580E-07	-	-	-
9	-4.956290E-05	1.695540E-04	-2.026727E-05	-	-	-
10	-5.884180E-05	1.453238E-04	-1.759580E-05	-	-	-
11	-5.879198E-05	1.186378E-04	-5.901409E-07	-	-	-
12	-6.606272E-05	1.054088E-04	8.183955E-06	-	-	-
13	-5.741881E-05	6.393240E-05	-1.069495E-05	-	-	-
14	-5.105466E-05	4.852575E-05	4.002559E-06	-	-	-
15	-6.067472E-05	0.000000E+00	3.434485E-05	-	-3.172095E+00	-
16	-4.853977E-05	-4.422712E-05	3.465034E-05	-	-	-
17	-1.213494E-05	-4.384352E-05	-3.462370E-05	-	-	-

****

***** Inlet Portal Section A - A *****

***** SECTIONAL FORCE *****

****

MEMBER NO.	I-JOINT	J-JOINT	------AXIAL FORCE-------		------SHEAR FORCE-------		--------MOMENT----------	
			(I-JOINT)	(J-JOINT)	(I-JOINT)	(J-JOINT)	(I-JOINT)	(J-JOINT)
1	1	2	-67.4228	-71.2021	5.5131	-22.0676	-23.2917	-38.2974
2	2	3	-65.9517	-62.5917	34.7433	20.8833	-38.2974	-5.0055
3	3	4	-62.5917	-52.5117	20.8833	-15.8367	-5.0055	1.9185
4	4	5	-52.5117	-48.8717	-15.8367	-27.3417	1.9185	-26.2460
5	5	6	-53.8910	-50.9510	15.2240	-10.3960	-26.2460	-21.6513
6	6	7	-43.3788	-43.3788	28.6767	17.7567	-21.6513	6.2088
7	7	8	-43.3788	-43.3788	17.7567	6.8367	6.2088	20.9648
8	8	9	-43.3788	-43.3788	6.8367	-17.6433	20.9648	7.9969
9	9	10	-43.3788	-43.3788	-17.6433	-29.8833	7.9969	-20.5191
10	10	11	-51.8042	-54.7442	9.5428	-16.0772	-20.5190	-26.8030
11	11	12	-50.0783	-53.7183	27.3417	15.8367	-26.8030	1.3615
12	12	13	-53.7183	-63.7983	15.8367	-20.8833	1.3615	-5.5625
13	13	14	-63.7983	-67.1583	-20.8833	-34.7433	-5.5625	-38.8545
14	14	15	-72.0553	-68.2760	22.9208	-4.6599	-38.8545	-22.1596
15	16	15	-51.5735	-51.5735	25.0113	41.8113	-17.9340	22.1596
16	17	16	-51.5735	-51.5735	-25.3887	25.0113	-17.2547	-17.9340
17	1	17	-51.5735	-51.5735	-42.1887	-25.3887	23.2917	-17.2547

****
***** Inlet Portal Section A - A *****
***** MAXIMUM MOMENT *****
****

MEMBER	JOINT	DIS.(FROM I)	MOMENT	SHEAR FORCE	AXIAL FORCE
1	1- 2	0.426	-22.117	0.000	-68.658
2	2- 3	-			
3	3- 4	1.960	15.110	0.000	-57.104
4	4- 5	-			
5	5- 6	1.166	-17.408	0.000	-52.295
6	6- 7	-			
7	7- 8	-			
8	8- 9	0.670	23.256	0.000	-43.379
9	9- 10	-			
10	10- 11	0.748	-16.942	0.000	-53.046
11	11- 12	-			
12	12- 13	1.640	14.553	0.000	-58.311
13	13- 14	-			
14	14- 15	1.620	-21.321	0.000	-69.320
15	16- 15	-			
16	17- 16	1.813	-40.276	0.000	-51.574
17	1- 17	-			

****
***** Inlet Portal Section A - A *****
***** CALCULATION OF INTERNAL STRESS IN REINFORCED CONCRETE *****
****

SIGCA = 105.0 KG/CM2
SIGSA = 2700.0 KG/CM2
SIGTAU= 12.8 KG/CM2

NOTES: * ;NO CALCULATION
** ;STEEL NOT NECESSARY
***;SECTION IS SMALL

MEM	POINT	B	H	D	DD	N	S	M	X	AS	ASD	SIGC	SIGS	SIGSD	TAU	
1	(1)	100.0	200.0	190.0	10.0	67.42	5.51	23.29	196.49	0.00	0.00	6.9	0.0	0.0	0.4	**
1	MAX	100.0	200.0	190.0	10.0	68.66	0.00	22.12	196.64	0.00	0.00	6.8	0.0	0.0	0.0	**
1	(2)	100.0	200.0	190.0	10.0	71.20	22.07	38.30	161.97	0.00	0.00	9.3	0.0	0.0	1.6	**
2	(2)	100.0	200.0	190.0	10.0	65.95	34.74	38.30	157.40	0.00	0.00	9.0	0.0	0.0	2.5	**
2	MAX	100.0	200.0	190.0	10.0	0.00	0.00	0.00	0.00	0.00	0.00	0.0	0.0	0.0	0.0	*
2	(3)	100.0	200.0	190.0	10.0	62.59	20.88	5.01	123.99	0.00	0.00	3.9	0.0	0.0	1.4	**
3	(3)	100.0	200.0	190.0	10.0	62.59	20.88	5.01	123.99	0.00	0.00	3.9	0.0	0.0	1.4	**
3	MAX	100.0	200.0	190.0	10.0	57.10	0.00	15.11	179.38	0.00	0.00	5.1	0.0	0.0	0.0	**
3	(4)	100.0	200.0	190.0	10.0	52.51	15.84	1.92	110.96	0.00	0.00	2.9	0.0	0.0	1.0	**
4	(4)	100.0	200.0	190.0	10.0	52.51	15.84	1.92	110.96	0.00	0.00	2.9	0.0	0.0	1.0	**
4	MAX	100.0	200.0	190.0	10.0	0.00	0.00	0.00	0.00	0.00	0.00	0.0	0.0	0.0	0.0	*
4	(5)	100.0	200.0	190.0	10.0	48.87	27.34	26.25	162.07	0.00	0.00	6.4	0.0	0.0	2.0	**
5	(5)	100.0	220.0	190.0	10.0	53.89	15.22	26.25	192.82	0.00	0.00	5.7	0.0	0.0	1.2	**
5	MAX	100.0	220.0	190.0	10.0	52.30	0.00	17.41	209.86	0.00	0.00	4.5	0.0	0.0	0.0	**
5	(6)	100.0	220.0	190.0	10.0	50.95	10.40	21.65	204.91	0.00	0.00	5.0	0.0	0.0	0.9	**
6	(6)	100.0	140.0	130.0	10.0	43.38	28.68	21.65	102.72	0.00	0.00	9.7	0.0	0.0	3.0	**
6	MAX	100.0	140.0	130.0	10.0	0.00	0.00	0.00	0.00	0.00	0.00	0.0	0.0	0.0	0.0	*
6	(7)	100.0	140.0	130.0	10.0	43.38	17.76	6.21	112.94	0.00	0.00	5.0	0.0	0.0	1.9	**
7	(7)	100.0	140.0	130.0	10.0	43.38	17.76	6.21	112.94	0.00	0.00	5.0	0.0	0.0	1.9	**
7	MAX	100.0	140.0	130.0	10.0	0.00	0.00	0.00	0.00	0.00	0.00	0.0	0.0	0.0	0.0	*
7	(8)	100.0	140.0	130.0	10.0	43.38	6.84	20.96	103.80	0.00	0.00	9.5	0.0	0.0	0.7	**
8	(8)	100.0	220.0	210.0	10.0	43.38	6.84	20.96	193.45	0.00	0.00	4.6	0.0	0.0	0.5	**
8	MAX	100.0	220.0	210.0	10.0	43.38	0.00	23.26	185.23	0.00	0.00	4.9	0.0	0.0	0.0	**
8	(9)	100.0	220.0	210.0	10.0	43.38	17.64	8.00	165.31	0.00	0.00	3.0	0.0	0.0	1.1	**
9	(9)	100.0	220.0	210.0	10.0	43.38	17.64	8.00	165.31	0.00	0.00	3.0	0.0	0.0	1.1	**
9	MAX	100.0	220.0	210.0	10.0	0.00	0.00	0.00	0.00	0.00	0.00	0.0	0.0	0.0	0.0	*
9	(10)	100.0	220.0	210.0	10.0	43.38	29.88	20.52	196.27	0.00	0.00	4.5	0.0	0.0	2.1	**
10	(10)	100.0	220.0	210.0	10.0	51.80	9.54	20.52	211.83	0.00	0.00	4.9	0.0	0.0	0.7	**
10	MAX	100.0	220.0	210.0	10.0	53.05	0.00	16.94	205.81	0.00	0.00	4.5	0.0	0.0	0.0	**
10	(11)	100.0	220.0	210.0	10.0	54.74	16.08	26.80	192.38	0.00	0.00	5.8	0.0	0.0	1.1	**
11	(11)	100.0	200.0	190.0	10.0	50.08	27.34	26.80	162.28	0.00	0.00	6.5	0.0	0.0	2.0	**
11	MAX	100.0	200.0	190.0	10.0	0.00	0.00	0.00	0.00	0.00	0.00	0.0	0.0	0.0	0.0	*
11	(12)	100.0	200.0	190.0	10.0	53.72	15.84	1.36	107.60	0.00	0.00	2.9	0.0	0.0	1.0	**
12	(12)	100.0	200.0	190.0	10.0	53.72	15.84	1.36	107.60	0.00	0.00	2.9	0.0	0.0	1.0	**
12	MAX	100.0	200.0	190.0	10.0	58.31	0.00	14.55	174.87	0.00	0.00	5.1	0.0	0.0	0.0	**
12	(13)	100.0	200.0	190.0	10.0	63.80	20.88	5.56	126.16	0.00	0.00	4.0	0.0	0.0	1.4	**
13	(13)	100.0	200.0	190.0	10.0	63.80	20.88	5.56	126.16	0.00	0.00	4.0	0.0	0.0	1.4	**
13	MAX	100.0	200.0	190.0	10.0	0.00	0.00	0.00	0.00	0.00	0.00	0.0	0.0	0.0	0.0	*
13	(14)	100.0	200.0	190.0	10.0	67.16	34.74	38.85	157.62	0.00	0.00	9.2	0.0	0.0	2.5	**
14	(14)	100.0	200.0	190.0	10.0	72.06	22.92	38.85	161.82	0.00	0.00	9.4	0.0	0.0	1.7	**
14	MAX	100.0	200.0	190.0	10.0	69.32	0.00	21.32	192.27	0.00	0.00	6.7	0.0	0.0	0.0	**
14	(15)	100.0	200.0	190.0	10.0	68.28	4.66	22.16	197.37	0.00	0.00	6.7	0.0	0.0	0.4	**
15	(15)	100.0	200.0	190.0	10.0	51.57	25.01	17.93	195.86	0.00	0.00	5.3	0.0	0.0	2.0	**
15	MAX	100.0	200.0	190.0	10.0	0.00	0.00	0.00	0.00	0.00	0.00	0.0	0.0	0.0	0.0	*
15	(15)	100.0	200.0	190.0	10.0	51.57	41.81	22.16	177.58	0.00	0.00	5.9	0.0	0.0	3.2	**

****
***** Inlet Portal Section A - A *****
***** CALCULATION OF INTERNAL STRESS IN REINFORCED CONCRETE *****
****

SIGCA = 105.0 KG/CM2
SIGSA = 2700.0 KG/CM2
SIGTAU= 12.8 KG/CM2

NOTES: * ;NO CALCULATION
** ;STEEL NOT NECESSARY
***;SECTION IS SMALL

MEM	POINT	B	H	D	DD	N	S	M	X	AS	ASD	SIGC	SIGS	SIGSD	TAU	
16	(17)	100.0	200.0	190.0	10.0	51.57	25.39	17.25	199.63	0.00	0.00	5.2	0.0	0.0	2.1	**
16	MAX	100.0	200.0	190.0	10.0	51.57	0.00	40.28	142.68	0.00	0.00	8.6	0.0	0.0	0.0	**
16	(16)	100.0	200.0	190.0	10.0	51.57	25.01	17.93	195.86	0.00	0.00	5.3	0.0	0.0	2.0	**
17	(1)	100.0	200.0	190.0	10.0	51.57	42.19	23.29	173.81	0.00	0.00	6.1	0.0	0.0	3.2	**
17	MAX	100.0	200.0	190.0	10.0	0.00	0.00	0.00	0.00	0.00	0.00	0.0	0.0	0.0	0.0	*
17	(17)	100.0	200.0	190.0	10.0	51.57	25.39	17.25	199.63	0.00	0.00	5.2	0.0	0.0	2.1	**

****
***** DATA LIST OF EXTERNAL LOAD *****
****

LOAD CASE= 2

ELEMENT NO.	TYPE	P	Q	XA	XB	ANGLE
1	2	61.000	59.600	0.000	0.000	-45.000
1	2	5.000	4.800	1.414	0.000	-45.000
1	2	62.800	62.800	0.000	0.000	45.000
1	2	-4.800	-4.800	0.000	0.000	45.000
2	2	64.400	62.500	0.000	0.000	0.000
2	2	4.800	4.800	0.000	0.000	-90.000
3	2	62.500	56.900	0.000	0.000	0.000
3	2	4.800	4.800	0.000	0.000	-90.000
4	2	56.900	54.900	0.000	0.000	0.000
4	2	4.800	4.800	0.000	0.000	-90.000
5	2	54.900	52.700	0.000	0.000	45.000
5	2	56.300	56.300	0.000	0.000	-45.000
6	2	54.400	54.400	0.000	0.000	0.000
7	2	54.400	54.400	0.000	0.000	0.000
8	2	56.300	56.300	0.000	0.000	0.000
9	2	56.300	56.300	0.000	0.000	0.000
10	2	56.300	56.300	0.000	0.000	45.000
10	2	52.700	54.900	0.000	0.000	-45.000
11	2	54.900	56.900	0.000	0.000	0.000
11	2	4.800	4.800	0.000	0.000	90.000
12	2	56.900	62.500	0.000	0.000	0.000
12	2	4.800	4.800	0.000	0.000	90.000
13	2	62.500	64.400	0.000	0.000	0.000
13	2	4.800	4.800	0.000	0.000	90.000
14	2	59.600	61.000	0.000	0.000	45.000
14	2	4.800	5.000	0.000	1.414	45.000
14	2	62.800	62.800	0.000	0.000	-45.000
14	2	-4.800	-4.800	0.000	0.000	-45.000
15	2	-62.800	-62.800	0.000	0.000	0.000
16	2	-62.800	-62.800	0.000	0.000	0.000
17	2	-62.800	-62.800	0.000	0.000	0.000

****
***** Inlet Portal Section A - A *****
***** DISPLACEMENT AND REACTION *****
****

JOINT	DISPLACEMENT			REACTION		
	X-DIRECTION	Y-DIRECTION	R-DIRECTION	X-DIRECTION	Y-DIRECTION	R-DIRECTION
1	0.000000E+00	0.000000E+00	-6.810872E-05	5.722046E-05	-2.766182E+00	-
2	9.980871E-05	9.381757E-05	7.174514E-05	-	-	-
3	2.190709E-04	1.650675E-04	1.058004E-04	-	-	-
4	2.070158E-04	3.706856E-04	-1.163496E-04	-	-	-
5	5.866401E-05	4.419389E-04	-8.885340E-05	-	-	-
6	-7.614735E-05	4.657251E-04	1.120330E-05	-	-	-
7	-1.708031E-04	5.852764E-04	1.336015E-04	-	-	-
8	-2.654588E-04	6.879325E-04	9.909510E-06	-	-	-
9	-3.859297E-04	5.917069E-04	-7.602136E-05	-	-	-
10	-4.461652E-04	5.109422E-04	-4.431799E-05	-	-	-
11	-5.372979E-04	4.422945E-04	5.940947E-05	-	-	-
12	-6.506239E-04	3.701867E-04	9.190771E-05	-	-	-
13	-5.996212E-04	1.622024E-04	-1.163905E-04	-	-	-
14	-4.704211E-04	9.016370E-05	-7.771805E-05	-	-	-
15	-3.656572E-04	0.000000E+00	6.702136E-05	-	-5.502247E+00	-
16	-2.925257E-04	-1.156143E-04	1.043485E-04	-	-	-
17	-7.313143E-05	-1.162405E-04	-1.043920E-04	-	-	-

****

***** Inlet Portal Section A - A *****

***** SECTIONAL FORCE *****

****

MEMBER NO.	I-JOINT	J-JOINT	------AXIAL FORCE-------		------SHEAR FORCE-------		--------MOMENT----------	
			(I-JOINT)	(J-JOINT)	(I-JOINT)	(J-JOINT)	(I-JOINT)	(J-JOINT)
1	1	2	-354.7319	-349.5512	84.8176	-82.7631	-149.1870	-146.0940
2	2	3	-305.6923	-299.9323	188.6477	112.5077	-146.0939	34.3713
3	3	4	-299.9323	-282.6523	112.5078	-102.4122	34.3713	46.4955
4	4	5	-282.6523	-276.4123	-102.4122	-175.0822	46.4954	-134.1574
5	5	6	-319.2548	-315.7548	71.6512	-82.4888	-134.1575	-145.3944
6	6	7	-281.6008	-281.6008	164.9438	99.6638	-145.3944	13.3704
7	7	8	-281.6008	-281.6008	99.6639	34.3838	13.3703	93.7992
8	8	9	-281.6008	-281.6008	34.3840	-100.7360	93.7992	14.1766
9	9	10	-281.6007	-281.6007	-100.7366	-168.2966	14.1762	-147.2427
10	10	11	-318.1250	-321.6250	80.1186	-74.0214	-147.2428	-140.6990
11	11	12	-279.7644	-286.0044	175.0817	102.4117	-140.6989	39.9539
12	12	13	-286.0044	-303.2844	102.4122	-112.5078	39.9540	27.8299
13	13	14	-303.2844	-309.0444	-112.5076	-188.6476	27.8295	-152.6351
14	14	15	-351.9215	-357.1023	85.1333	-82.4475	-152.6354	-151.0357
15	16	15	-310.8086	-310.8086	113.3481	188.7081	-30.1983	151.0357
16	17	16	-310.8086	-310.8086	-112.7319	113.3481	-31.3073	-30.1983
17	1	17	-310.8086	-310.8086	-188.0919	-112.7319	149.1870	-31.3073

****
***** Inlet Portal Section A - A *****
***** MAXIMUM MOMENT *****
****

MEMBER	JOINT	DIS.(FROM I)	MOMENT	SHEAR FORCE	AXIAL FORCE
1	1- 2	1.011	-106.354	0.000	-352.843
2	2- 3		-		
3	3- 4	1.842	137.201	0.000	-291.089
4	4- 5		-		
5	5- 6	0.915	-101.412	0.000	-318.019
6	6- 7		-		
7	7- 8		-		
8	8- 9	0.611	104.299	0.000	-281.601
9	9- 10		-		
10	10- 11	1.034	-105.747	0.000	-320.337
11	11- 12		-		
12	12- 13	1.758	130.660	0.000	-294.441
13	13- 14		-		
14	14- 15	0.997	-110.565	0.000	-355.259
15	16- 15		-		
16	17- 16	1.795	-132.490	0.000	-310.809
17	1- 17		-		

****
***** Inlet Portal Section A - A *****
***** CALCULATION OF INTERNAL STRESS IN REINFORCED CONCRETE *****
****

SIGCA = 105.0 KG/CM2
SIGSA = 2700.0 KG/CM2
SIGTAU= 12.8 KG/CM2

NOTES: * ;NO CALCULATION
** ;STEEL NOT NECESSARY
***;SECTION IS SMALL

MEM	POINT	B	H	D	DD	N	S	M	X	AS	ASD	SIGC	SIGS	SIGSD	TAU	
1	(1)	100.0	200.0	190.0	10.0	354.73	84.82	149.19	173.83	0.01	0.00	40.8	56.9	0.0	6.4	
1	MAX	100.0	200.0	190.0	10.0	352.84	0.00	106.35	190.43	0.00	0.00	33.6	0.0	0.0	0.0	**
1	(2)	100.0	200.0	190.0	10.0	349.55	82.76	146.09	174.62	0.01	0.00	40.0	52.9	0.0	6.3	
2	(2)	100.0	200.0	190.0	10.0	305.69	188.65	146.09	156.63	0.01	0.00	39.0	124.8	0.0	13.7	***
2	MAX	100.0	200.0	190.0	10.0	0.00	0.00	0.00	0.00	0.00	0.00	0.0	0.0	0.0	0.0	*
2	(3)	100.0	200.0	190.0	10.0	299.93	112.51	34.37	134.38	0.00	0.00	20.2	0.0	0.0	7.7	**
3	(3)	100.0	200.0	190.0	10.0	299.93	112.51	34.37	134.38	0.00	0.00	20.2	0.0	0.0	7.7	**
3	MAX	100.0	200.0	190.0	10.0	291.09	0.00	137.20	158.60	0.01	0.00	36.7	109.0	0.0	0.0	
3	(4)	100.0	200.0	190.0	10.0	282.65	102.41	46.50	149.35	0.00	0.00	21.1	0.0	0.0	7.3	**
4	(4)	100.0	200.0	190.0	10.0	282.65	102.41	46.50	149.35	0.00	0.00	21.1	0.0	0.0	7.3	**
4	MAX	100.0	200.0	190.0	10.0	0.00	0.00	0.00	0.00	0.00	0.00	0.0	0.0	0.0	0.0	*
4	(5)	100.0	200.0	190.0	10.0	276.41	175.08	134.16	154.40	0.01	0.00	35.8	123.9	0.0	12.6	
5	(5)	100.0	220.0	190.0	10.0	319.25	71.65	134.16	205.98	0.00	0.00	31.1	0.0	0.0	5.9	**
5	MAX	100.0	220.0	190.0	10.0	318.02	0.00	101.41	205.67	0.00	0.00	27.0	0.0	0.0	0.0	**
5	(6)	100.0	220.0	190.0	10.0	315.75	82.49	145.39	197.59	0.00	0.00	32.4	0.0	0.0	6.6	**
6	(6)	100.0	140.0	130.0	10.0	281.60	164.94	145.39	55.13	0.01	0.01	102.2	2081.0	-1254.4	14.8	***
6	MAX	100.0	140.0	130.0	10.0	0.00	0.00	0.00	0.00	0.00	0.00	0.0	0.0	0.0	0.0	*
6	(7)	100.0	140.0	130.0	10.0	281.60	99.66	13.37	84.24	0.00	0.00	24.2	0.0	0.0	9.8	**
7	(7)	100.0	140.0	130.0	10.0	281.60	99.66	13.37	84.24	0.00	0.00	24.2	0.0	0.0	9.8	**
7	MAX	100.0	140.0	130.0	10.0	0.00	0.00	0.00	0.00	0.00	0.00	0.0	0.0	0.0	0.0	*
7	(8)	100.0	140.0	130.0	10.0	281.60	34.38	93.80	110.07	0.01	0.00	51.2	138.9	0.0	3.7	
8	(8)	100.0	220.0	210.0	10.0	281.60	34.38	93.80	209.93	0.00	0.00	24.4	0.0	0.0	2.5	**
8	MAX	100.0	220.0	210.0	10.0	281.60	0.00	104.30	218.90	0.00	0.00	25.7	0.0	0.0	0.0	**
8	(9)	100.0	220.0	210.0	10.0	281.60	100.74	14.18	125.10	0.00	0.00	14.8	0.0	0.0	6.0	**
9	(9)	100.0	220.0	210.0	10.0	281.60	100.74	14.18	125.10	0.00	0.00	14.6	0.0	0.0	6.0	**
9	MAX	100.0	220.0	210.0	10.0	0.00	0.00	0.00	0.00	0.00	0.00	0.0	0.0	0.0	0.0	*
9	(10)	100.0	220.0	210.0	10.0	281.60	168.30	147.24	173.14	0.01	0.00	32.5	103.9	0.0	11.1	
10	(10)	100.0	220.0	210.0	10.0	318.13	80.12	147.24	197.14	0.00	0.00	32.7	0.0	0.0	5.6	**
10	MAX	100.0	220.0	210.0	10.0	320.34	0.00	105.75	209.03	0.00	0.00	27.7	0.0	0.0	0.0	**
10	(11)	100.0	220.0	210.0	10.0	321.63	74.02	140.70	202.20	0.00	0.00	32.1	0.0	0.0	5.2	**
11	(11)	100.0	200.0	190.0	10.0	279.76	175.08	140.70	149.13	0.01	0.00	37.5	154.3	0.0	12.5	
11	MAX	100.0	200.0	190.0	10.0	0.00	0.00	0.00	0.00	0.00	0.00	0.0	0.0	0.0	0.0	*
11	(12)	100.0	200.0	190.0	10.0	286.00	102.41	39.95	141.91	0.00	0.00	20.3	0.0	0.0	7.2	**
12	(12)	100.0	200.0	190.0	10.0	286.00	102.41	39.95	141.91	0.00	0.00	20.3	0.0	0.0	7.2	**
12	MAX	100.0	200.0	190.0	10.0	294.44	0.00	130.66	166.87	0.01	0.00	35.3	73.4	0.0	0.0	
12	(13)	100.0	200.0	190.0	10.0	303.28	112.51	27.83	127.53	0.00	0.00	19.3	0.0	0.0	7.6	**
13	(13)	100.0	200.0	190.0	10.0	303.28	112.51	27.83	127.53	0.00	0.00	19.3	0.0	0.0	7.6	**
13	MAX	100.0	200.0	190.0	10.0	0.00	0.00	0.00	0.00	0.00	0.00	0.0	0.0	0.0	0.0	*
13	(14)	100.0	200.0	190.0	10.0	309.04	188.65	152.64	151.83	0.01	0.00	40.7	153.5	0.0	13.5	***
14	(14)	100.0	200.0	190.0	10.0	351.92	85.13	152.64	169.88	0.01	0.00	41.4	73.6	0.0	6.4	
14	MAX	100.0	200.0	190.0	10.0	355.26	0.00	110.57	193.37	0.00	0.00	34.3	0.0	0.0	0.0	**
14	(15)	100.0	200.0	190.0	10.0	357.10	82.45	151.04	173.12	0.01	0.00	41.3	60.4	0.0	6.2	
15	(16)	100.0	200.0	190.0	10.0	310.81	113.35	30.20	129.15	0.00	0.00	20.1	0.0	0.0	7.7	**
15	MAX	100.0	200.0	190.0	10.0	0.00	0.00	0.00	0.00	0.00	0.00	0.0	0.0	0.0	0.0	*
15	(15)	100.0	200.0	190.0	10.0	310.81	188.71	151.04	154.22	0.01	0.00	40.3	140.3	0.0	13.6	***

****
***** Inlet Portal Section A - A *****
***** CALCULATION OF INTERNAL STRESS IN REINFORCED CONCRETE *****
****

SIGCA = 105.0 KG/CM2
SIGSA = 2700.0 KG/CM2
SIGTAU= 12.8 KG/CM2

NOTES: * ;NO CALCULATION
** ;STEEL NOT NECESSARY
***;SECTION IS SMALL

MEM POINT	B	H	D	DD	N	S	M	X	AS	ASD	SIGC	SIGS	SIGSD	TAU	
16 (17)	100.0	200.0	190.0	10.0	310.81	112.73	31.31	130.22	0.00	0.00	20.2	0.0	0.0	7.7	**
16 MAX	100.0	200.0	190.0	10.0	310.81	0.00	132.49	172.12	0.01	0.00	36.1	56.3	0.0	0.0	
16 (16)	100.0	200.0	190.0	10.0	310.81	113.35	30.20	123.15	0.00	0.00	20.1	0.0	0.0	7.7	**
17 (1)	100.0	200.0	190.0	10.0	310.81	188.09	149.19	156.00	0.01	0.00	39.8	130.3	0.0	13.6	***
17 MAX	100.0	200.0	190.0	10.0	0.00	0.00	0.00	0.00	0.00	0.00	0.0	0.0	0.0	0.0	*
17 (17)	100.0	200.0	190.0	10.0	310.81	112.73	31.31	130.22	0.00	0.00	20.2	0.0	0.0	7.7	**

2. STRUCTURAL ANALYSIS OF INLET PORTAL SECTION B -B

Fig. 1.1.4(1)

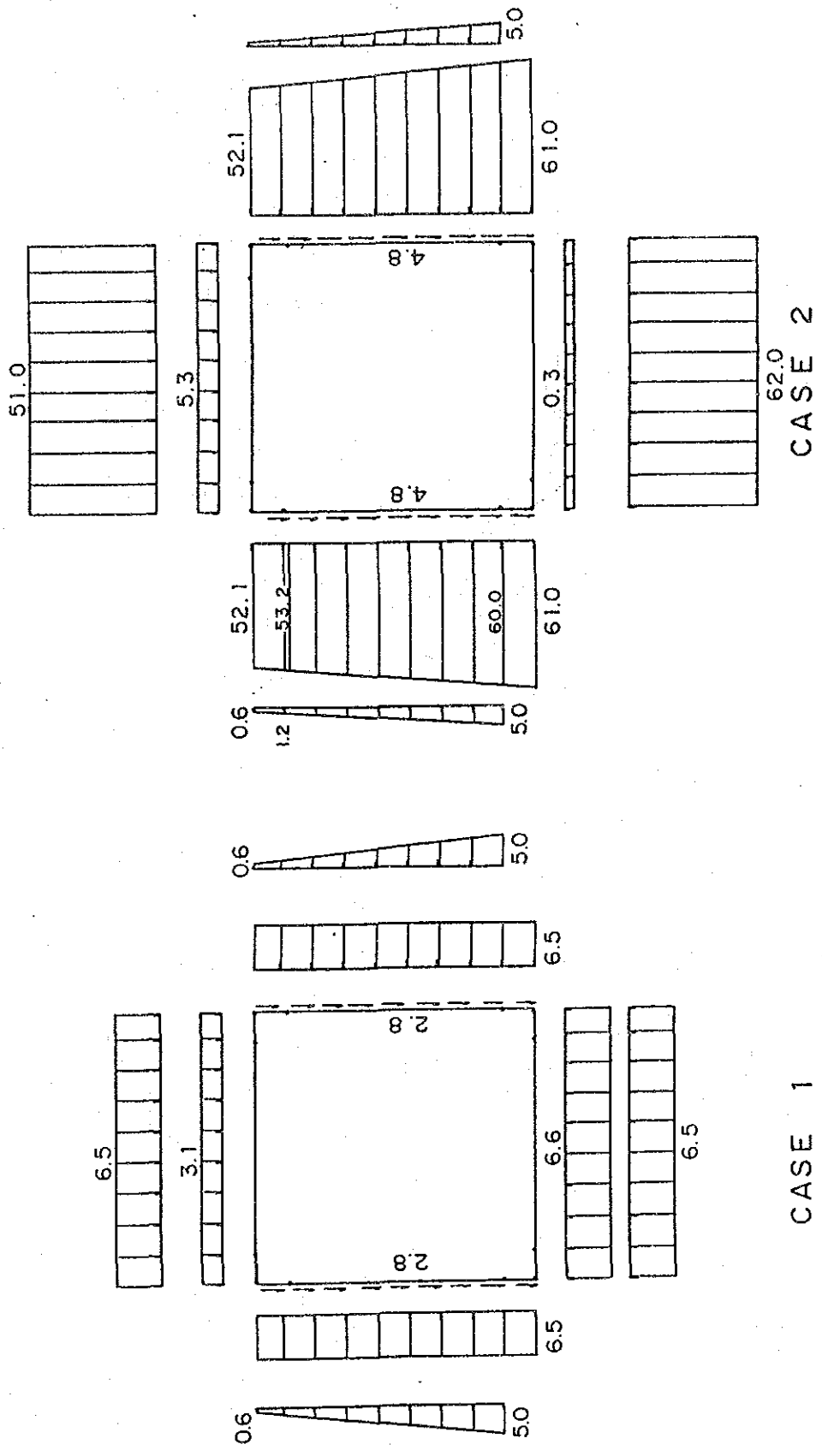

Loading diagram of inlet portal (section B-B)

GOVERNMENT OF MAURITIUS
PORT LOUIS WATER SUPPLY PROJECT
JAPAN INTERNATIONAL COOPERATION AGENCY

Fig. 1.1.4(2)

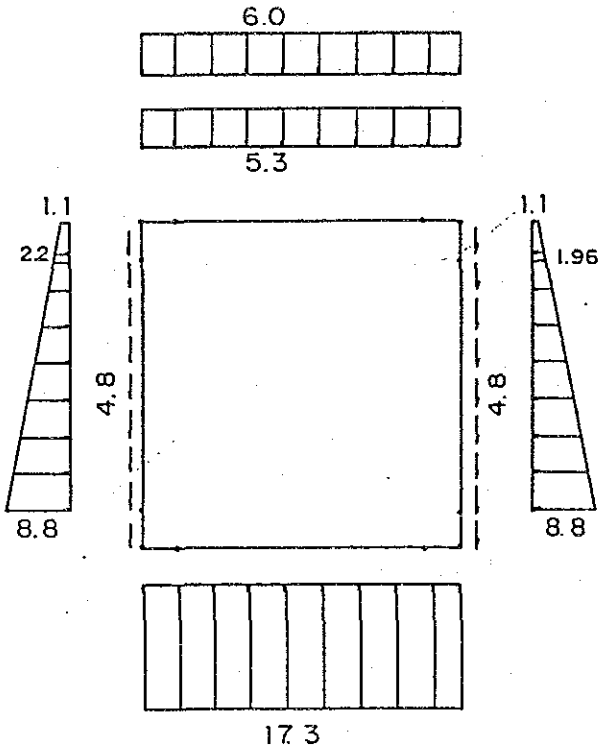

CASE 3

Loading diagram of inlet portal (section B-B)

GOVERNMENT OF MAURITIUS
PORT LOUIS WATER SUPPLY PROJECT
JAPAN INTERNATIONAL COOPERATION AGENCY

Fig. 1.1.7

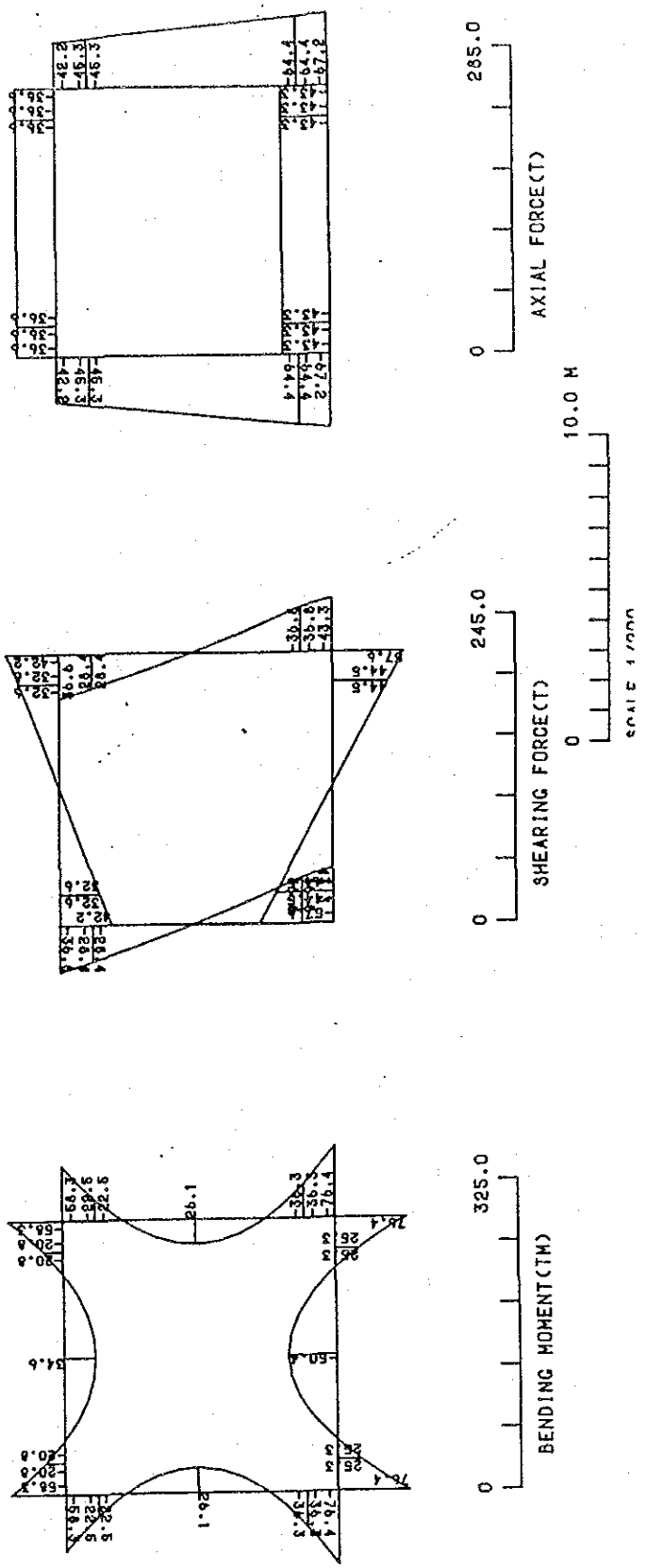

Bending moment shearing and axial force diagram
inlet portal section B-B (case -1)

GOVERNMENT OF MAURITIUS
PORT LOUIS WATER SUPPLY PROJECT

JAPAN INTERNATIONAL COOPERATION AGENCY

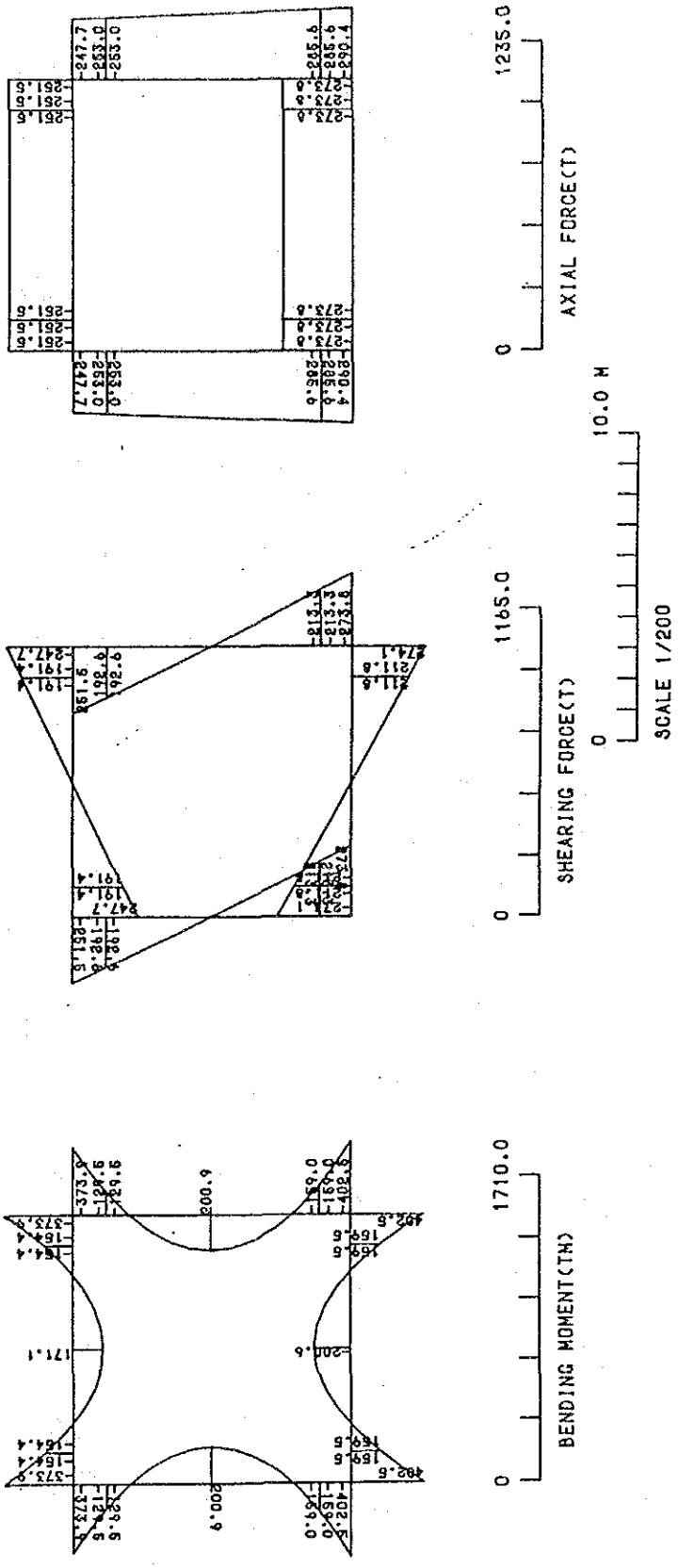

Bending moment shearing and axial force diagram
inlet portal section B-B (case -2)

GOVERNMENT OF MAURITIUS
PORT LOUIS WATER SUPPLY PROJECT
JAPAN INTERNATIONAL COOPERATION AGENCY

Fig. 1.1.9

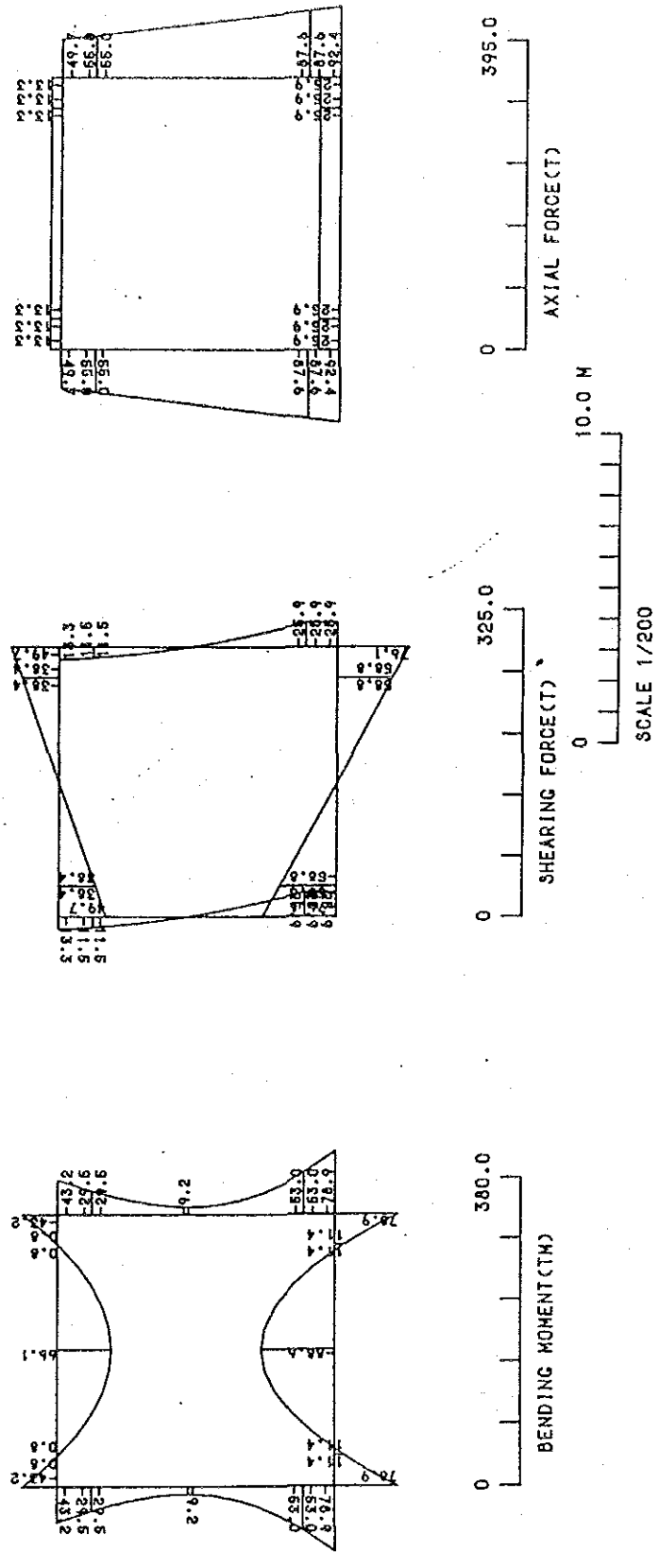

Bending moment shearing and axial force diagram
inlet portal section B-B (case -3)

GOVERNMENT OF MAURITIUS
PORT LOUIS WATER SUPPLY PROJECT

JAPAN INTERNATIONAL COOPERATION AGENCY

```
        Parameter information

                                    Input   (Max. size)

NODAL POINT NUMBER (INP)-----   12   (  100)
ELEMENT NUMBER (IEL)---------   12   (  100)
MATERIAL NUMBER (IPR)--------    1   (   10)
PROPATYL NUMBER (IMA)--------    2   (   10)

 Parameter set is OK. But you can reset Max. size to input.
```

```
*********************************************************************************
*****                        FRAME ANALYSIS                                 *****
*****            Inlet Portal    Section B - B                              *****
*****                        INPUT DATA LIST                                *****
*********************************************************************************
```

NUMBER OF NODAL POINT----------	12
NUMBER OF ELEMENT----------	12
NUMBER OF MATERIAL PROPATIES-------	1
NUMBER OF ELEMENT PROPATIES-------	2
CASE NUMBER OF LOAD CONDITION------	3
NUMBER OF ELASTIC SUPPORT----------	0
TOLERANCE(DEFAULT=1.E-5) ----------	1.000E-05

MATERIAL NO.	ELASTIC MODULUS
1	2.550000E+06

E.P.NO.	SECTIONAL AREA	MOMENT OF INAT.
1	2.200000E+00	8.873000E-01
2	2.000000E+00	6.667000E-01

****

***** DATA OF ELEMENT *****

****

ELEMENT NO.	JOINT(I)	JOINT(J)	MAT.PR.	EL.PR.	CODE	E	A	I
1	1	2	1	2	0	2.55000E+06	2.00000E+00	6.66700E-01
2	2	3	1	2	0	2.55000E+06	2.00000E+00	6.66700E-01
3	3	4	1	2	0	2.55000E+06	2.00000E+00	6.66700E-01
4	4	5	1	1	0	2.55000E+06	2.20000E+00	8.87300E-01
5	5	6	1	1	0	2.55000E+06	2.20000E+00	8.87300E-01
6	6	7	1	1	0	2.55000E+06	2.20000E+00	8.87300E-01
7	7	8	1	2	0	2.55000E+06	2.00000E+00	6.66700E-01
8	8	9	1	2	0	2.55000E+06	2.00000E+00	6.66700E-01
9	9	10	1	2	0	2.55000E+06	2.00000E+00	6.66700E-01
10	11	10	1	2	0	2.55000E+06	2.00000E+00	6.66700E-01
11	12	11	1	2	0	2.55000E+06	2.00000E+00	6.66700E-01
12	1	12	1	2	0	2.55000E+06	2.00000E+00	6.66700E-01

ORIGINAL BAND WIDTH = 36
FINAL BAND WIDTH = 36

****
***** DATA OF ELEMENT *****
****

ELEMENT NO.	JOINT(I)	JOINT(J)	MAT.PR.	EL.PR.	CODE	E	A	I
1	1	2	1	2	0	2.55000E+06	2.00000E+00	6.66700E-01
2	2	3	1	2	0	2.55000E+06	2.00000E+00	6.66700E-01
3	3	4	1	2	0	2.55000E+06	2.00000E+00	6.66700E-01
4	4	5	1	1	0	2.55000E+06	2.20000E+00	8.87300E-01
5	5	6	1	1	0	2.55000E+06	2.20000E+00	8.87300E-01
6	6	7	1	1	0	2.55000E+06	2.20000E+00	8.87300E-01
7	7	8	1	2	0	2.55000E+06	2.00000E+00	6.66700E-01
8	8	9	1	2	0	2.55000E+06	2.00000E+00	6.66700E-01
9	9	10	1	2	0	2.55000E+06	2.00000E+00	6.66700E-01
10	11	10	1	2	0	2.55000E+06	2.00000E+00	6.66700E-01
11	12	11	1	2	0	2.55000E+06	2.00000E+00	6.66700E-01
12	1	12	1	2	0	2.55000E+06	2.00000E+00	6.66700E-01

ORIGINAL BAND WIDTH = 36
FINAL BAND WIDTH = 36

****
***** DATA LIST OF EXTERNAL LOAD *****
****

LOAD CASE= 1

ELEMENT NO.	TYPE	P	Q	XA	XB	ANGLE
1	2	6.500	6.500	0.000	0.000	0.000
1	2	2.800	2.800	0.000	0.000	-90.000
2	2	11.500	7.700	0.000	0.000	0.000
2	2	2.800	2.800	0.000	0.000	-90.000
3	2	7.700	7.100	0.000	0.000	0.000
3	2	2.800	2.800	0.000	0.000	-90.000
4	2	9.600	9.600	0.000	0.000	0.000
5	2	9.600	9.600	0.000	0.000	0.000
6	2	9.600	9.600	0.000	0.000	0.000
7	2	7.100	7.700	0.000	0.000	0.000
7	2	2.800	2.800	0.000	0.000	90.000
8	2	7.700	11.500	0.000	0.000	0.000
8	2	2.800	2.800	0.000	0.000	90.000
9	2	6.500	6.500	0.000	0.000	0.000
9	2	2.800	2.800	0.000	0.000	90.000
10	2	-13.100	-13.100	0.000	0.000	0.000
11	2	-13.100	-13.100	0.000	0.000	0.000
12	2	-13.100	-13.100	0.000	0.000	0.000

****
***** Inlet Portal Section B - B *****
***** DISPLACEMENT AND REACTION *****
****

JOINT	DISPLACEMENT			REACTION		
	X-DIRECTION	Y-DIRECTION	R-DIRECTION	X-DIRECTION	Y-DIRECTION	R-DIRECTION
1	0.000000E+00	0.000000E+00	-2.098480E-05	-4.768372E-07	-9.520000E+00	-
2	-2.595457E-06	1.289411E-05	1.186410E-05	-	-	-
3	-3.182674E-07	8.601412E-05	-1.850071E-05	-	-	-
4	-8.694223E-06	9.545687E-05	7.136419E-06	-	-	-
5	-1.521547E-05	1.125380E-04	2.426803E-05	-	-	-
6	-5.955998E-05	1.125380E-04	-2.426803E-05	-	-	-
7	-6.608124E-05	9.545687E-05	-7.136419E-06	-	-	-
8	-7.445720E-05	8.601412E-05	1.850071E-05	-	-	-
9	-7.218000E-05	1.289411E-05	-1.186410E-05	-	-	-
10	-7.477546E-05	0.000000E+00	2.098480E-05	-	-9.520000E+00	-
11	-6.627825E-05	-3.813360E-05	5.027382E-05	-	-	-
12	-8.497212E-06	-3.813360E-05	-5.027382E-05	-	-	-

****
***** Inlet Portal Section B - B *****
***** SECTIONAL FORCE *****
****

MEMBER NO.	I-JOINT	J-JOINT	------AXIAL FORCE-------		------SHEAR FORCE-------		--------MOMENT----------	
			(I-JOINT)	(J-JOINT)	(I-JOINT)	(J-JOINT)	(I-JOINT)	(J-JOINT)
1	1	2	-67.1600	-64.3600	43.3358	36.8358	-76.4305	-36.3447
2	2	3	-64.3600	-45.3200	36.8358	-28.4442	-36.3447	-22.4561
3	3	4	-45.3200	-42.2400	-28.4442	-36.5842	-22.4561	-58.2822
4	4	5	-36.5842	-36.5842	42.2400	32.6400	-58.2822	-20.8422
5	5	6	-36.5842	-36.5842	32.6400	-32.6400	-20.8422	-20.8422
6	6	7	-36.5842	-36.5842	-32.6399	-42.2399	-20.8423	-58.2823
7	7	8	-42.2400	-45.3200	36.5842	28.4442	-58.2822	-22.4561
8	8	9	-45.3200	-64.3600	28.4442	-36.8358	-22.4561	-36.3447
9	9	10	-64.3600	-67.1600	-36.8357	-43.3357	-36.3448	-76.4305
10	11	10	-43.3358	-43.3358	44.5400	57.6400	25.3405	76.4305
11	12	11	-43.3358	-43.3358	-44.5400	44.5400	25.3405	25.3405
12	1	12	-43.3358	-43.3358	-57.6400	-44.5400	76.4305	25.3405

****
***** Inlet Portal Section B - B *****
***** MAXIMUM MOMENT *****
****

MEMBER	JOINT	DIS.(FROM I)	MOMENT	SHEAR FORCE	AXIAL FORCE
1	1- 2	-			
2	2- 3	3.501	26.136	0.000	-54.558
3	3- 4	-			
4	4- 5	-			
5	5- 6	3.400	34.646	0.000	-36.584
6	6- 7	-			
7	7- 8	-			
8	8- 9	3.299	26.136	0.000	-54.557
9	9- 10	-			
10	11- 10	-			
11	12- 11	3.400	-50.378	0.000	-43.336
12	1- 12	-			

****
***** Inlet Portal Section B - B *****
***** CALCULATION OF INTERNAL STRESS IN REINFORCED CONCRETE *****
****

SIGCA = 105.0 KG/CM2
SIGSA = 2700.0 KG/CM2
SIGTAU= 12.8 KG/CM2

NOTES: * ;NO CALCULATION
** ;STEEL NOT NECESSARY
***;SECTION IS SMALL

MEM	POINT	B	H	D	DD	N	S	M	X	AS	ASD	SIGC	SIGS	SIGSD	TAU	
1	(1)	100.0	200.0	190.0	10.0	67.16	43.34	76.43	36.25	3.62	0.00	42.4	2700.0	0.0	2.4	
1	MAX	100.0	200.0	190.0	10.0	0.00	0.00	0.00	0.00	0.00	0.00	0.0	0.0	0.0	0.0	*
1	(2)	100.0	200.0	190.0	10.0	64.36	36.84	36.34	159.03	0.00	0.00	8.7	0.0	0.0	2.7	**
2	(2)	100.0	200.0	190.0	10.0	64.36	36.84	36.34	159.03	0.00	0.00	8.7	0.0	0.0	2.7	**
2	MAX	100.0	200.0	190.0	10.0	54.56	0.00	26.14	169.58	0.00	0.00	6.6	0.0	0.0	0.0	**
2	(3)	100.0	200.0	190.0	10.0	45.32	28.44	22.46	167.27	0.00	0.00	5.6	0.0	0.0	2.1	**
3	(3)	100.0	200.0	190.0	10.0	45.32	28.44	22.46	167.27	0.00	0.00	5.6	0.0	0.0	2.1	**
3	MAX	100.0	200.0	190.0	10.0	0.00	0.00	0.00	0.00	0.00	0.00	0.0	0.0	0.0	0.0	*
3	(4)	100.0	200.0	190.0	10.0	42.24	36.58	58.28	30.79	4.20	0.00	34.8	2700.0	0.0	2.0	
4	(4)	100.0	220.0	210.0	10.0	36.58	42.24	58.28	30.76	4.04	0.00	30.9	2700.0	0.0	2.1	
4	MAX	100.0	220.0	210.0	10.0	0.00	0.00	0.00	0.00	0.00	0.00	0.0	0.0	0.0	0.0	*
4	(5)	100.0	220.0	210.0	10.0	36.58	32.64	20.84	180.80	0.00	0.00	4.2	0.0	0.0	2.2	**
5	(5)	100.0	220.0	210.0	10.0	36.58	32.64	20.84	180.80	0.00	0.00	4.2	0.0	0.0	2.2	**
5	MAX	100.0	220.0	210.0	10.0	36.58	0.00	34.65	152.59	0.00	0.00	6.0	0.0	0.0	0.0	**
5	(6)	100.0	220.0	210.0	10.0	36.58	32.64	20.84	180.80	0.00	0.00	4.2	0.0	0.0	2.2	**
6	(6)	100.0	220.0	210.0	10.0	36.58	32.64	20.84	180.80	0.00	0.00	4.2	0.0	0.0	2.2	**
6	MAX	100.0	220.0	210.0	10.0	0.00	0.00	0.00	0.00	0.00	0.00	0.0	0.0	0.0	0.0	*
6	(7)	100.0	220.0	210.0	10.0	36.58	42.24	58.28	30.76	4.04	0.00	30.9	2700.0	0.0	2.1	
7	(7)	100.0	200.0	190.0	10.0	42.24	36.58	58.28	30.79	4.20	0.00	34.8	2700.0	0.0	2.0	
7	MAX	100.0	200.0	190.0	10.0	0.00	0.00	0.00	0.00	0.00	0.00	0.0	0.0	0.0	0.0	*
7	(8)	100.0	200.0	190.0	10.0	45.32	28.44	22.46	167.27	0.00	0.00	5.6	0.0	0.0	2.1	**
8	(8)	100.0	200.0	190.0	10.0	45.32	28.44	22.46	167.27	0.00	0.00	5.6	0.0	0.0	2.1	**
8	MAX	100.0	200.0	190.0	10.0	54.56	0.00	26.14	169.58	0.00	0.00	6.6	0.0	0.0	0.0	**
8	(9)	100.0	200.0	190.0	10.0	64.36	36.84	36.34	159.03	0.00	0.00	8.7	0.0	0.0	2.7	**
9	(9)	100.0	200.0	190.0	10.0	64.36	36.84	36.34	159.03	0.00	0.00	8.7	0.0	0.0	2.7	**
9	MAX	100.0	200.0	190.0	10.0	0.00	0.00	0.00	0.00	0.00	0.00	0.0	0.0	0.0	0.0	*
9	(10)	100.0	200.0	190.0	10.0	67.16	43.34	76.43	36.25	3.62	0.00	42.4	2700.0	0.0	2.4	
10	(11)	100.0	200.0	190.0	10.0	43.34	44.54	25.34	157.00	0.00	0.00	6.0	0.0	0.0	3.2	**
10	MAX	100.0	200.0	190.0	10.0	0.00	0.00	0.00	0.00	0.00	0.00	0.0	0.0	0.0	0.0	*
10	(10)	100.0	200.0	190.0	10.0	43.34	57.64	76.43	33.50	7.86	0.00	38.5	2700.0	0.0	3.2	
11	(12)	100.0	200.0	190.0	10.0	43.34	44.54	25.34	157.00	0.00	0.00	6.0	0.0	0.0	3.2	**
11	MAX	100.0	200.0	190.0	10.0	43.34	0.00	50.38	29.73	2.33	0.00	33.4	2700.0	0.0	0.0	
11	(11)	100.0	200.0	190.0	10.0	43.34	44.54	25.34	157.00	0.00	0.00	6.0	0.0	0.0	3.2	**
12	(1)	100.0	200.0	190.0	10.0	43.34	57.64	76.43	33.50	7.86	0.00	38.5	2700.0	0.0	3.2	
12	MAX	100.0	200.0	190.0	10.0	0.00	0.00	0.00	0.00	0.00	0.00	0.0	0.0	0.0	0.0	*
12	(12)	100.0	200.0	190.0	10.0	43.34	44.54	25.34	157.00	0.00	0.00	6.0	0.0	0.0	3.2	**

****
***** DATA LIST OF EXTERNAL LOAD *****
****

LOAD CASE= 2

ELEMENT NO.	TYPE	P	Q	XA	XB	ANGLE
1	2	61.000	60.000	0.000	0.000	0.000
1	2	4.800	4.800	0.000	0.000	-90.000
2	2	65.000	54.400	0.000	0.000	0.000
2	2	4.800	4.800	0.000	0.000	-90.000
3	2	54.400	52.700	0.000	0.000	0.000
3	2	4.800	4.800	0.000	0.000	-90.000
4	2	56.300	56.300	0.000	0.000	0.000
5	2	56.300	56.300	0.000	0.000	0.000
6	2	56.300	56.300	0.000	0.000	0.000
7	2	52.700	54.400	0.000	0.000	0.000
7	2	4.800	4.800	0.000	0.000	90.000
8	2	54.400	65.000	0.000	0.000	0.000
8	2	4.800	4.800	0.000	0.000	90.000
9	2	60.000	61.000	0.000	0.000	0.000
9	2	4.800	4.800	0.000	0.000	90.000
10	2	-62.300	-62.300	0.000	0.000	0.000
11	2	-62.300	-62.300	0.000	0.000	0.000
12	2	-62.300	-62.300	0.000	0.000	0.000

****
***** Inlet Portal Section B - B *****
***** DISPLACEMENT AND REACTION *****
****

JOINT	DISPLACEMENT			REACTION		
	X-DIRECTION	Y-DIRECTION	R-DIRECTION	X-DIRECTION	Y-DIRECTION	R-DIRECTION
1	0.000000E+00	0.000000E+00	1.133860E-06	-6.103516E-05	-1.632004E+01	-
2	9.415006E-05	5.647841E-05	1.632971E-04	-	-	-
3	8.586273E-05	4.155718E-04	-1.799717E-04	-	-	-
4	-3.896097E-05	4.695710E-04	-2.061438E-05	-	-	-
5	-8.379810E-05	5.143769E-04	9.405230E-05	-	-	-
6	-3.886906E-04	5.143769E-04	-9.405230E-05	-	-	-
7	-4.335277E-04	4.695710E-04	2.061438E-05	-	-	-
8	-5.583515E-04	4.155718E-04	1.799717E-04	-	-	-
9	-5.666388E-04	5.647841E-05	-1.632971E-04	-	-	-
10	-4.724887E-04	0.000000E+00	-1.133860E-06	-	-1.632004E+01	-
11	-4.187968E-04	-9.189064E-05	1.610957E-04	-	-	-
12	-5.369190E-05	-9.189064E-05	-1.610957E-04	-	-	-

****
***** Inlet Portal Section B - B *****
***** SECTIONAL FORCE *****
****

MEMBER NO.	I-JOINT	J-JOINT	------AXIAL FORCE-------		------SHEAR FORCE-------		--------MOMENT----------	
			(I-JOINT)	(J-JOINT)	(I-JOINT)	(J-JOINT)	(I-JOINT)	(J-JOINT)
1	1	2	-290.4400	-285.6400	273.8287	213.3288	-402.4808	-158.9854
2	2	3	-285.6400	-253.0000	213.3287	-192.6313	-158.9854	-129.4596
3	3	4	-252.9999	-247.7199	-192.6313	-251.5363	-129.4596	-373.9232
4	4	5	-251.5363	-251.5363	247.7202	191.4202	-373.9235	-154.3533
5	5	6	-251.5363	-251.5363	191.4200	-191.4200	-154.3532	-154.3532
6	6	7	-251.5364	-251.5364	-191.4201	-247.7200	-154.3528	-373.9233
7	7	8	-247.7200	-253.0000	251.5365	192.6315	-373.9232	-129.4597
8	8	9	-253.0000	-285.6400	192.6313	-213.3287	-129.4596	-158.9854
9	9	10	-285.6400	-290.4400	-213.3289	-273.8288	-158.9855	-402.4808
10	11	10	-273.8286	-273.8286	211.8200	274.1200	159.5108	402.4808
11	12	11	-273.8287	-273.8287	-211.8200	211.8200	159.5108	159.5108
12	1	12	-273.8287	-273.8287	-274.1200	-211.8200	402.4808	159.5108

****
***** Inlet Portal Section B - B *****
***** MAXIMUM MOMENT *****
****

MEMBER	JOINT	DIS.(FROM I)	MOMENT	SHEAR FORCE	AXIAL FORCE
1	1- 2	-			
2	2- 3	3.422	200.859	0.000	-269.212
3	3- 4	-			
4	4- 5	-			
5	5- 6	3.400	171.061	0.000	-251.536
6	6- 7	-			
7	7- 8	-			
8	8- 9	3.378	200.858	0.000	-269.212
9	9- 10	-			
10	11- 10	-			
11	12- 11	3.400	-200.583	0.000	-273.829
12	1- 12	-			

****
***** Inlet Portal Section B - B *****
***** CALCULATION OF INTERNAL STRESS IN REINFORCED CONCRETE *****
****

SIGCA = 105.0 KG/CM2
SIGSA = 2700.0 KG/CM2
SIGTAU= 12.8 KG/CM2

NOTES: * ;NO CALCULATION
** ;STEEL NOT NECESSARY
***;SECTION IS SMALL

MEM	POINT	B	H	D	DD	N	S	M	X	AS	ASD	SIGC	SIGS	SIGSD	TAU	
1	(1)	100.0	200.0	190.0	10.0	290.44	273.83	402.48	68.23	38.05	38.05	100.9	2700.0	-1291.1	16.4	***
1	MAX	100.0	200.0	190.0	10.0	0.00	0.00	0.00	0.00	0.00	0.00	0.0	0.0	0.0	0.0	*
1	(2)	100.0	200.0	190.0	10.0	285.64	213.33	158.99	133.03	0.01	0.00	42.9	275.9	0.0	14.6	***
2	(2)	100.0	200.0	190.0	10.0	285.64	213.33	158.99	133.03	0.01	0.00	42.9	275.9	0.0	14.6	***
2	MAX	100.0	200.0	190.0	10.0	269.21	0.00	200.86	76.20	0.01	0.00	70.7	1583.0	0.0	0.0	
2	(3)	100.0	200.0	190.0	10.0	253.00	192.63	129.46	146.49	0.01	0.00	34.5	153.9	0.0	13.6	***
3	(3)	100.0	200.0	190.0	10.0	253.00	192.63	129.46	146.49	0.01	0.00	34.5	153.9	0.0	13.6	***
3	MAX	100.0	200.0	190.0	10.0	0.00	0.00	0.00	0.00	0.00	0.00	0.0	0.0	0.0	0.0	*
3	(4)	100.0	200.0	190.0	10.0	247.72	251.54	373.92	69.26	40.69	0.00	103.3	2700.0	0.0	15.1	***
4	(4)	100.0	220.0	210.0	10.0	251.54	247.72	373.92	71.84	31.35	0.00	93.6	2700.0	0.0	13.3	***
4	MAX	100.0	220.0	210.0	10.0	0.00	0.00	0.00	0.00	0.00	0.00	0.0	0.0	0.0	0.0	*
4	(5)	100.0	220.0	210.0	10.0	251.54	191.42	154.35	145.91	0.01	0.00	34.5	227.2	0.0	11.9	
5	(5)	100.0	220.0	210.0	10.0	251.54	191.42	154.35	145.91	0.01	0.00	34.5	227.2	0.0	11.9	
5	MAX	100.0	220.0	210.0	10.0	251.54	0.00	171.06	125.99	0.01	0.00	39.9	399.4	0.0	0.0	
5	(6)	100.0	220.0	210.0	10.0	251.54	191.42	154.35	145.91	0.01	0.00	34.5	227.2	0.0	11.9	
6	(6)	100.0	220.0	210.0	10.0	251.54	191.42	154.35	145.91	0.01	0.00	34.5	227.2	0.0	11.9	
6	MAX	100.0	220.0	210.0	10.0	0.00	0.00	0.00	0.00	0.00	0.00	0.0	0.0	0.0	0.0	*
6	(7)	100.0	220.0	210.0	10.0	251.54	247.72	373.92	71.84	31.35	0.00	93.6	2700.0	0.0	13.3	***
7	(7)	100.0	200.0	190.0	10.0	247.72	251.54	373.92	69.26	40.69	0.00	103.3	2700.0	0.0	15.1	***
7	MAX	100.0	200.0	190.0	10.0	0.00	0.00	0.00	0.00	0.00	0.00	0.0	0.0	0.0	0.0	*
7	(8)	100.0	200.0	190.0	10.0	253.00	192.63	129.46	146.49	0.01	0.00	34.5	153.9	0.0	13.6	***
8	(8)	100.0	200.0	190.0	10.0	253.00	192.63	129.46	146.49	0.01	0.00	34.5	153.9	0.0	13.6	***
8	MAX	100.0	200.0	190.0	10.0	269.21	0.00	200.86	76.20	0.01	0.00	70.7	1583.0	0.0	0.0	
8	(9)	100.0	200.0	190.0	10.0	285.64	213.33	158.99	133.03	0.01	0.00	42.9	275.9	0.0	14.6	***
9	(9)	100.0	200.0	190.0	10.0	285.64	213.33	158.99	133.03	0.01	0.00	42.9	275.9	0.0	14.6	***
9	MAX	100.0	200.0	190.0	10.0	0.00	0.00	0.00	0.00	0.00	0.00	0.0	0.0	0.0	0.0	*
9	(10)	100.0	200.0	190.0	10.0	290.44	273.83	402.48	68.23	38.05	38.05	100.9	2700.0	-1291.1	16.4	***
10	(11)	100.0	200.0	190.0	10.0	273.83	211.82	159.51	125.25	0.01	0.00	43.7	339.1	0.0	14.3	***
10	MAX	100.0	200.0	190.0	10.0	0.00	0.00	0.00	0.00	0.00	0.00	0.0	0.0	0.0	0.0	*
10	(10)	100.0	200.0	190.0	10.0	273.83	274.12	402.48	67.30	40.61	40.61	98.7	2700.0	-1261.0	16.4	***
11	(12)	100.0	200.0	190.0	10.0	273.83	211.82	159.51	125.25	0.01	0.00	43.7	339.1	0.0	14.3	***
11	MAX	100.0	200.0	190.0	10.0	273.83	0.00	200.58	80.27	0.01	0.00	68.2	1399.0	0.0	0.0	
11	(11)	100.0	200.0	190.0	10.0	273.83	211.82	159.51	125.25	0.01	0.00	43.7	339.1	0.0	14.3	***
12	(1)	100.0	200.0	190.0	10.0	273.83	274.12	402.48	67.30	40.61	40.61	98.7	2700.0	-1261.0	16.4	***
12	MAX	100.0	200.0	190.0	10.0	0.00	0.00	0.00	0.00	0.00	0.00	0.0	0.0	0.0	0.0	*
12	(12)	100.0	200.0	190.0	10.0	273.83	211.82	159.51	125.25	0.01	0.00	43.7	339.1	0.0	14.3	***

****
***** DATA LIST OF EXTERNAL LOAD *****
****

LOAD CASE= 3

ELEMENT NO.	TYPE	P	Q	XA	XB	ANGLE
1	2	4.800	4.800	0.000	0.000	-90.000
2	2	8.800	2.200	0.000	0.000	0.000
2	2	4.800	4.800	0.000	0.000	-90.000
3	2	2.200	1.100	0.000	0.000	0.000
3	2	4.800	4.800	0.000	0.000	-90.000
4	2	11.300	11.300	0.000	0.000	0.000
5	2	11.300	11.300	0.000	0.000	0.000
6	2	11.300	11.300	0.000	0.000	0.000
7	2	1.100	2.200	0.000	0.000	0.000
7	2	4.800	4.800	0.000	0.000	90.000
8	2	2.200	8.800	0.000	0.000	0.000
8	2	4.800	4.800	0.000	0.000	90.000
9	2	4.800	4.800	0.000	0.000	90.000
10	2	-17.300	-17.300	0.000	0.000	0.000
11	2	-17.300	-17.300	0.000	0.000	0.000
12	2	-17.300	-17.300	0.000	0.000	0.000

****
***** Inlet Portal Section B - B *****
***** DISPLACEMENT AND REACTION *****
****

JOINT	DISPLACEMENT			REACTION		
	X-DIRECTION	Y-DIRECTION	R-DIRECTION	X-DIRECTION	Y-DIRECTION	R-DIRECTION
1	0.000000E+00	0.000000E+00	-8.470861E-05	1.189253E-06	-1.632003E+01	-
2	-6.403925E-05	1.765489E-05	-4.590907E-05	-	-	-
3	-6.169808E-05	1.127482E-04	3.430218E-05	-	-	-
4	-1.190256E-05	1.240416E-04	5.772123E-05	-	-	-
5	-1.427594E-05	1.878639E-04	6.667722E-05	-	-	-
6	-3.041488E-05	1.878639E-04	-6.667722E-05	-	-	-
7	-3.278826E-05	1.240416E-04	-5.772123E-05	-	-	-
8	1.700726E-05	1.127482E-04	-3.430218E-05	-	-	-
9	1.934843E-05	1.765489E-05	4.590907E-05	-	-	-
10	-4.469082E-05	0.000000E+00	8.470861E-05	-	-1.632003E+01	-
11	-3.961232E-05	-1.008787E-04	1.104344E-04	-	-	-
12	-5.078502E-06	-1.008787E-04	-1.104344E-04	-	-	-

****

***** Inlet Portal Section B - B *****

***** SECTIONAL FORCE *****

****

MEMBER NO.	I-JOINT	J-JOINT	------AXIAL FORCE-------		------SHEAR FORCE-------		--------MOMENT----------	
			(I-JOINT)	(J-JOINT)	(I-JOINT)	(J-JOINT)	(I-JOINT)	(J-JOINT)
1	1	2	-92.4400	-87.6400	25.9004	25.9004	-78.9127	-53.0124
2	2	3	-87.6400	-55.0000	25.9004	-11.4996	-53.0124	-29.4819
3	3	4	-55.0000	-49.7200	-11.4996	-13.3146	-29.4819	-43.2406
4	4	5	-13.3146	-13.3146	49.7199	38.4199	-43.2407	0.8295
5	5	6	-13.3146	-13.3146	38.4200	-38.4200	0.8294	0.8294
6	6	7	-13.3146	-13.3146	-38.4199	-49.7199	0.8293	-43.2407
7	7	8	-49.7200	-55.0000	13.3146	11.4996	-43.2406	-29.4819
8	8	9	-55.0000	-87.6400	11.4996	-25.9004	-29.4819	-53.0124
9	9	10	-87.6400	-92.4400	-25.9003	-25.9003	-53.0124	-78.9127
10	11	10	-25.9004	-25.9004	58.8200	76.1200	11.4427	78.9127
11	12	11	-25.9004	-25.9004	-58.8200	58.8200	11.4427	11.4427
12	1	12	-25.9004	-25.9004	-76.1200	-58.8200	78.9127	11.4427

****
***** Inlet Portal Section B - B *****
***** MAXIMUM MOMENT *****
****

MEMBER	JOINT	DIS.(FROM I)	MOMENT	SHEAR FORCE	AXIAL FORCE
1	1- 2	-			
2	2- 3	3.697	-9.223	0.000	-69.895
3	3- 4	-			
4	4- 5	-			
5	5- 6	3.400	66.143	0.000	-13.315
6	6- 7	-			
7	7- 8	-			
8	8- 9	3.103	-9.223	0.000	-69.895
9	9- 10	-			
10	11- 10	-			
11	12- 11	3.400	-88.551	0.000	-25.900
12	1- 12	-			

****
***** Inlet Portal Section B - B *****
***** CALCULATION OF INTERNAL STRESS IN REINFORCED CONCRETE *****
****

SIGCA = 91.0 KG/CM2
SIGSA = 2340.0 KG/CM2
SIGTAU= 11.1 KG/CM2

NOTES: * ;NO CALCULATION
** ;STEEL NOT NECESSARY
***;SECTION IS SMALL

MEM	POINT	B	H	D	DD	N	S	M	X	AS	ASD	SIGC	SIGS	SIGSD	TAU	
1	(1)	100.0	200.0	190.0	10.0	92.44	25.90	78.91	44.02	0.01	0.00	42.0	2089.7	0.0	1.5	
1	MAX	100.0	200.0	190.0	10.0	0.00	0.00	0.00	0.00	0.00	0.00	0.0	0.0	0.0	0.0	*
1	(2)	100.0	200.0	190.0	10.0	87.64	25.90	53.01	118.54	0.01	0.00	14.8	133.7	0.0	1.7	
2	(2)	100.0	200.0	190.0	10.0	87.64	25.90	53.01	118.54	0.01	0.00	14.8	133.7	0.0	1.7	
2	MAX	100.0	200.0	190.0	10.0	69.89	0.00	9.22	139.59	0.00	0.00	4.9	0.0	0.0	0.0	**
2	(3)	100.0	200.0	190.0	10.0	55.00	11.50	29.48	162.19	0.00	0.00	7.2	0.0	0.0	0.8	**
3	(3)	100.0	200.0	190.0	10.0	55.00	11.50	29.48	162.19	0.00	0.00	7.2	0.0	0.0	0.8	**
3	MAX	100.0	200.0	190.0	10.0	0.00	0.00	0.00	0.00	0.00	0.00	0.0	0.0	0.0	0.0	*
3	(4)	100.0	200.0	190.0	10.0	49.72	13.31	43.24	39.25	0.01	0.00	25.3	1459.9	0.0	0.8	
4	(4)	100.0	220.0	210.0	10.0	13.31	49.72	43.24	25.75	6.31	0.00	21.8	2340.0	0.0	2.5	
4	MAX	100.0	220.0	210.0	10.0	0.00	0.00	0.00	0.00	0.00	0.00	0.0	0.0	0.0	0.0	*
4	(5)	100.0	220.0	210.0	10.0	13.31	38.42	0.83	128.69	0.00	0.00	0.7	0.0	0.0	2.3	**
5	(5)	100.0	220.0	210.0	10.0	13.31	38.42	0.83	128.69	0.00	0.00	0.7	0.0	0.0	2.3	**
5	MAX	100.0	220.0	210.0	10.0	13.31	0.00	66.14	30.26	11.30	0.00	26.3	2340.0	0.0	0.0	
5	(6)	100.0	220.0	210.0	10.0	13.31	38.42	0.83	128.69	0.00	0.00	0.7	0.0	0.0	2.3	**
6	(6)	100.0	220.0	210.0	10.0	13.31	38.42	0.83	128.69	0.00	0.00	0.7	0.0	0.0	2.3	**
6	MAX	100.0	220.0	210.0	10.0	0.00	0.00	0.00	0.00	0.00	0.00	0.0	0.0	0.0	0.0	*
6	(7)	100.0	220.0	210.0	10.0	13.31	49.72	43.24	25.75	6.31	0.00	21.8	2340.0	0.0	2.5	
7	(7)	100.0	200.0	190.0	10.0	49.72	13.31	43.24	39.25	0.01	0.00	25.3	1459.9	0.0	0.8	
7	MAX	100.0	200.0	190.0	10.0	0.00	0.00	0.00	0.00	0.00	0.00	0.0	0.0	0.0	0.0	*
7	(8)	100.0	200.0	190.0	10.0	55.00	11.50	29.48	162.19	0.00	0.00	7.2	0.0	0.0	0.8	**
8	(8)	100.0	200.0	190.0	10.0	55.00	11.50	29.48	162.19	0.00	0.00	7.2	0.0	0.0	0.8	**
8	MAX	100.0	200.0	190.0	10.0	69.89	0.00	9.22	139.59	0.00	0.00	4.9	0.0	0.0	0.0	**
8	(9)	100.0	200.0	190.0	10.0	87.64	25.90	53.01	118.54	0.01	0.00	14.8	133.7	0.0	1.7	
9	(9)	100.0	200.0	190.0	10.0	87.64	25.90	53.01	118.54	0.01	0.00	14.8	133.7	0.0	1.7	
9	MAX	100.0	200.0	190.0	10.0	0.00	0.00	0.00	0.00	0.00	0.00	0.0	0.0	0.0	0.0	*
9	(10)	100.0	200.0	190.0	10.0	92.44	25.90	78.91	44.02	0.01	0.00	42.0	2089.7	0.0	1.5	
10	(11)	100.0	200.0	190.0	10.0	25.90	58.82	11.44	175.45	0.00	0.00	3.0	0.0	0.0	4.5	**
10	MAX	100.0	200.0	190.0	10.0	0.00	0.00	0.00	0.00	0.00	0.00	0.0	0.0	0.0	0.0	*
10	(10)	100.0	200.0	190.0	10.0	25.90	76.12	78.91	33.84	13.37	0.00	33.8	2340.0	0.0	4.3	
11	(12)	100.0	200.0	190.0	10.0	25.90	58.82	11.44	175.45	0.00	0.00	3.0	0.0	0.0	4.5	**
11	MAX	100.0	200.0	190.0	10.0	25.90	0.00	88.55	35.28	15.75	0.00	35.6	2340.0	0.0	0.0	
11	(11)	100.0	200.0	190.0	10.0	25.90	58.82	11.44	175.45	0.00	0.00	3.0	0.0	0.0	4.5	**
12	(1)	100.0	200.0	190.0	10.0	25.90	76.12	78.91	33.84	13.37	0.00	33.8	2340.0	0.0	4.3	
12	MAX	100.0	200.0	190.0	10.0	0.00	0.00	0.00	0.00	0.00	0.00	0.0	0.0	0.0	0.0	*
12	(12)	100.0	200.0	190.0	10.0	25.90	58.82	11.44	175.45	0.00	0.00	3.0	0.0	0.0	4.5	**

3. STRUCTURAL ANALYSIS OF OUTLET TRANSITION

Fig. 1.1.10

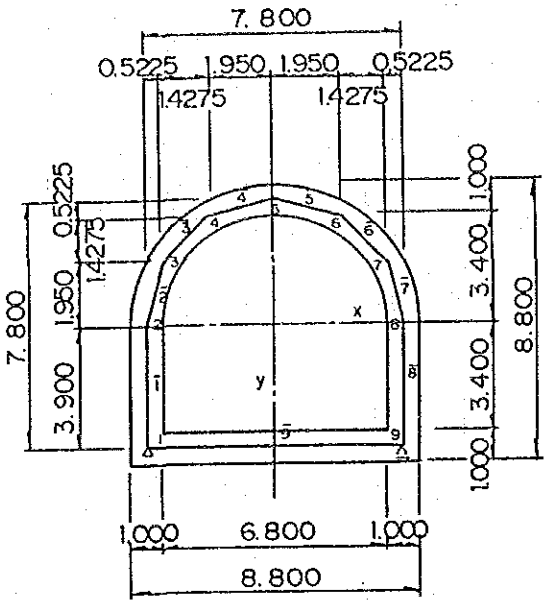

A = 1.0 m²
I = 0.0833 m²

	x (m)	y (m)
1	−3.900	3.900
2	−3.900	0.000
3	−3.3775	−1.950
4	−1.950	−3.3775
5	0.000	−3.900
6	1.950	−3.3775
7	3.3775	−1.950
8	3.900	0.000
9	3.900	3.900

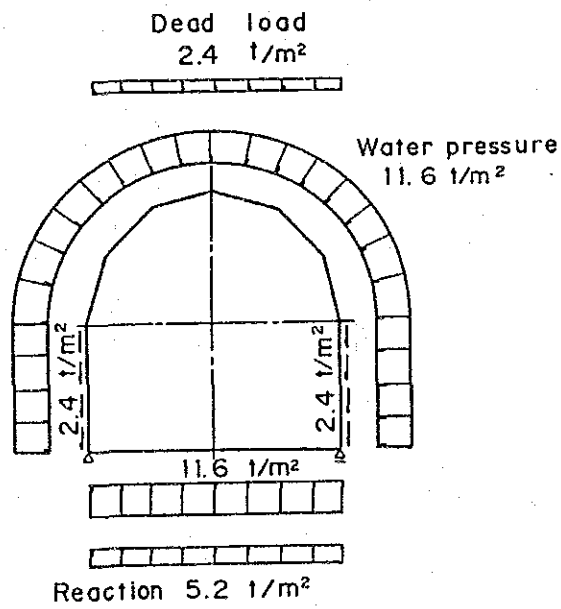

(1) During diversion

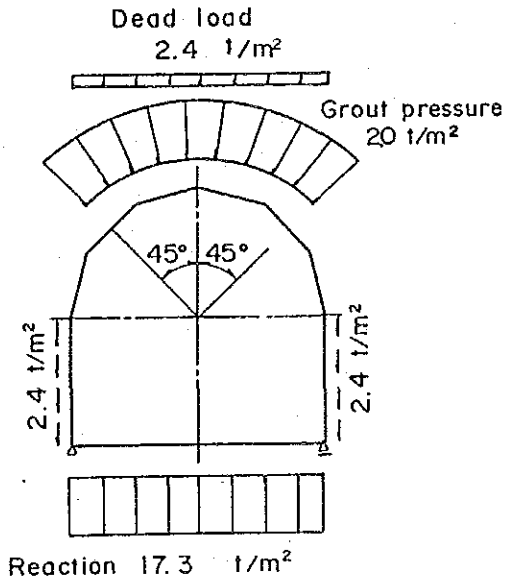

(2) Grouting condition

Load diagram outlet transition	GOVERNMENT OF MAURITIUS PORT LOUIS WATER SUPPLY PROJECT JAPAN INTERNATIONAL COOPERATION AGENCY

Fig. 1.1.11

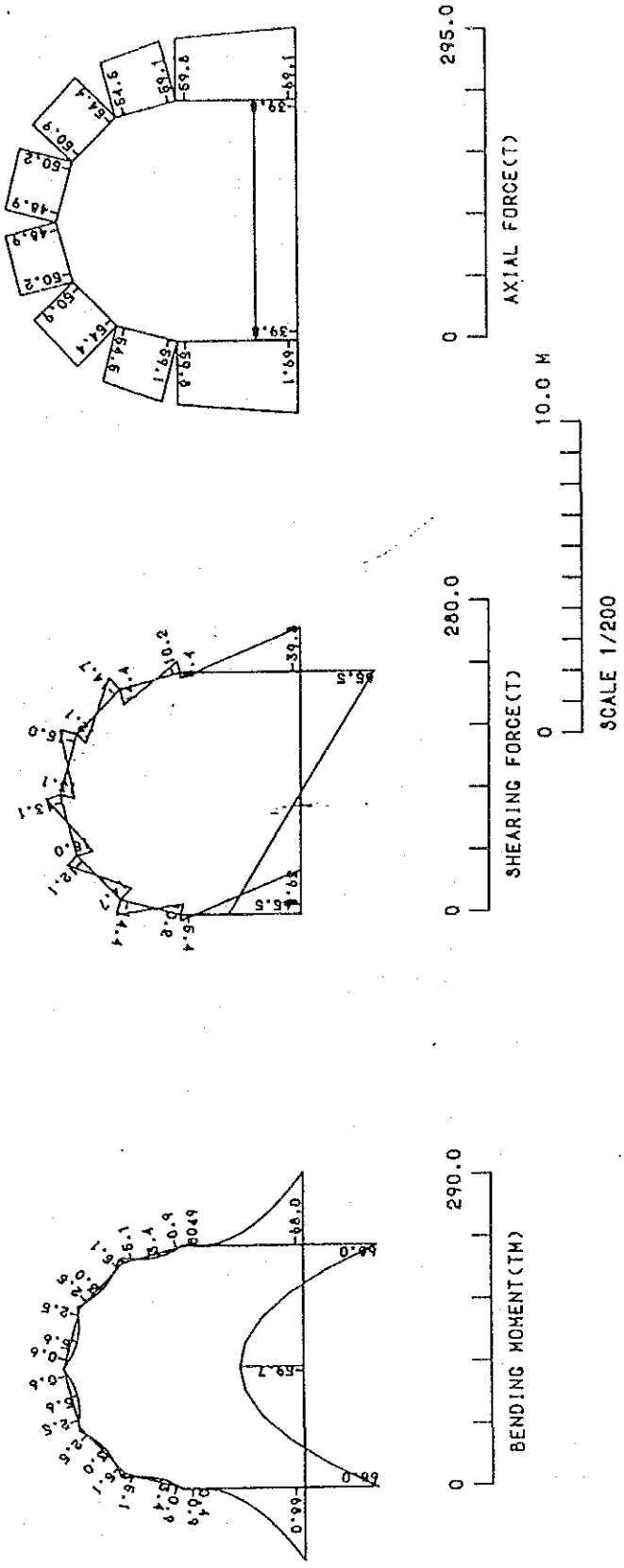

Bending moment shearing and axial force diagram transition of diversion outlet (case-1)

GOVERNMENT OF MAURITIUS
PORT LOUIS WATER SUPPLY PROJECT

JAPAN INTERNATIONAL COOPERATION AGENCY

Fig. 1.1.12

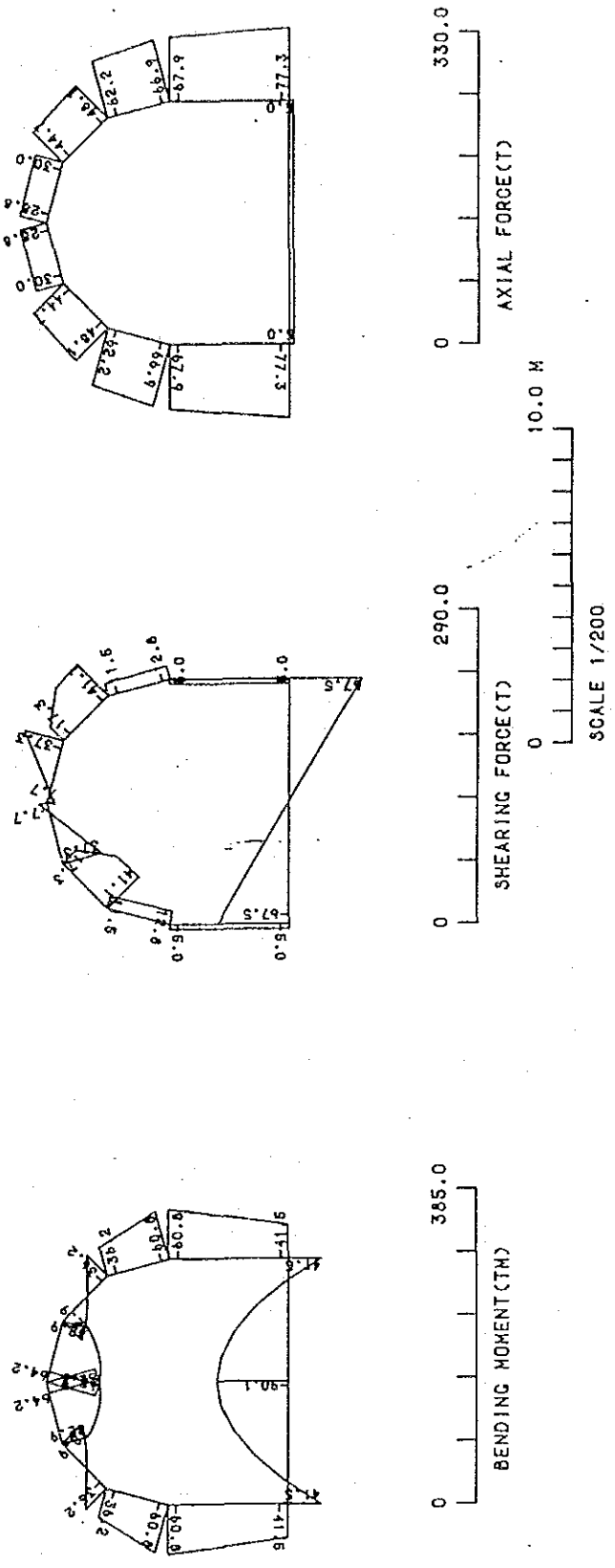

Bending moment shearing and axial force diagram transition of diversion outlet (case-2)

GOVERNMENT OF MAURITIUS
PORT LOUIS WATER SUPPLY PROJECT

JAPAN INTERNATIONAL COOPERATION AGENCY

```
Parameter information

                                    Input   (Max. size)

NODAL POINT NUMBER (INP)-----         9    (  100)
ELEMENT NUMBER (IEL)---------         9    (  100)
MATERIAL NUMBER (IPR)--------         1    (   10)
PROPATYL NUMBER (IMA)--------         1    (   10)

 Parameter set is OK. But you can reset Max. size to input.
```

****
***** FRAME ANALYSIS *****
***** Transition of Diversion Outlet *****
***** INPUT DATA LIST *****
****

NUMBER OF NODAL POINT----------	9
NUMBER OF ELEMENT----------	9
NUMBER OF MATERIAL PROPATIES-------	1
NUMBER OF ELEMENT PROPATIES-------	1
CASE NUMBER OF LOAD CONDITION------	2
NUMBER OF ELASTIC SUPPORT----------	0
TOLERANCE(DEFAULT=1.E-5) ----------	1.000E-05

MATERIAL NO.	ELASTIC MODULUS
1	2.550000E+06

E.P.NO.	SECTIONAL AREA	MOMENT OF INAT.
1	1.000000E+00	8.330000E-02

****
***** DATA OF NODAL POINT *****
****

NODAL NO.	X-COORDINATE	Y-COORDINATE	D(X)	D(Y)	D(R)
1	-3.9000	3.9000	1	1	0
2	-3.9000	0.0000	0	0	0
3	-3.3775	-1.9500	0	0	0
4	-1.9500	-3.3775	0	0	0
5	0.0000	-3.9000	0	0	0
6	1.9500	-3.3775	0	0	0
7	3.3775	-1.9500	0	0	0
8	3.9000	0.0000	0	0	0
9	3.9000	3.9000	0	1	0

****
***** DATA OF ELEMENT *****
****

ELEMENT NO.	JOINT(I)	JOINT(J)	MAT.PR.	EL.PR.	CODE	E	A	I
1	1	2	1	1	0	2.55000E+06	1.00000E+00	8.33000E-02
2	2	3	1	1	0	2.55000E+06	1.00000E+00	8.33000E-02
3	3	4	1	1	0	2.55000E+06	1.00000E+00	8.33000E-02
4	4	5	1	1	0	2.55000E+06	1.00000E+00	8.33000E-02
5	5	6	1	1	0	2.55000E+06	1.00000E+00	8.33000E-02
6	6	7	1	1	0	2.55000E+06	1.00000E+00	8.33000E-02
7	7	8	1	1	0	2.55000E+06	1.00000E+00	8.33000E-02
8	8	9	1	1	0	2.55000E+06	1.00000E+00	8.33000E-02
9	1	9	1	1	0	2.55000E+06	1.00000E+00	8.33000E-02

ORIGINAL BAND WIDTH = 27
FINAL BAND WIDTH = 27

****
***** DATA LIST OF EXTERNAL LOAD *****
****

LOAD CASE= 1

ELEMENT NO.	TYPE	P	Q	XA	XB	ANGLE
1	2	11.600	11.600	0.000	0.000	0.000
1	2	2.400	2.400	0.000	0.000	-90.000
2	2	11.600	11.600	0.000	0.000	0.000
2	2	2.400	2.400	0.000	0.000	-75.000
3	2	11.600	11.600	0.000	0.000	0.000
3	2	2.400	2.400	0.000	0.000	-45.000
4	2	11.600	11.600	0.000	0.000	0.000
4	2	2.400	2.400	0.000	0.000	-15.000
5	2	11.600	11.600	0.000	0.000	0.000
5	2	2.400	2.400	0.000	0.000	15.000
6	2	11.600	11.600	0.000	0.000	0.000
6	2	2.400	2.400	0.000	0.000	45.000
7	2	11.600	11.600	0.000	0.000	0.000
7	2	2.400	2.400	0.000	0.000	75.000
8	2	11.600	11.600	0.000	0.000	0.000
8	2	2.400	2.400	0.000	0.000	90.000
9	2	-16.800	-16.800	0.000	0.000	0.000

****
***** Transition of Diversion Outlet *****
***** DISPLACEMENT AND REACTION *****
****

JOINT	DISPLACEMENT			REACTION		
	X-DIRECTION	Y-DIRECTION	R-DIRECTION	X-DIRECTION	Y-DIRECTION	R-DIRECTION
1	0.000000E+00	0.000000E+00	-3.147160E-04	-3.814697E-06	-3.615290E+00	-
2	-1.191135E-04	9.857866E-05	4.821204E-05	-	-	-
3	-5.379157E-05	1.626337E-04	3.739825E-05	-	-	-
4	-3.179028E-05	2.435947E-04	3.052282E-05	-	-	-
5	-6.092051E-05	2.864394E-04	-1.949979E-11	-	-	-
6	-9.005071E-05	2.435947E-04	-3.052283E-05	-	-	-
7	-6.804945E-05	1.626337E-04	-3.739821E-05	-	-	-
8	-2.727630E-06	9.857866E-05	-4.821198E-05	-	-	-
9	-1.218413E-04	0.000000E+00	3.147160E-04	-	-3.615290E+00	-

****

*****　　Transition of Diversion Outlet　　*****

*****　　SECTIONAL FORCE　　*****

****

MEMBER NO.	I-JOINT	J-JOINT	------AXIAL FORCE-------		------SHEAR FORCE-------		--------MOMENT----------	
			(I-JOINT)	(J-JOINT)	(I-JOINT)	(J-JOINT)	(I-JOINT)	(J-JOINT)
1	1	2	-69.1353	-59.7753	39.8327	-5.4073	-68.0349	-0.9052
2	2	3	-59.1380	-54.4580	10.2479	-14.4240	-0.9052	-5.1204
3	3	4	-54.3740	-50.9480	14.7375	-12.1065	-5.1205	-2.4648
4	4	5	-50.1755	-48.9215	14.9895	-13.1085	-2.4648	-0.5660
5	5	6	-48.9215	-50.1755	13.1085	-14.9895	-0.5660	-2.4648
6	6	7	-50.9480	-54.3740	12.1065	-14.7375	-2.4648	-5.1205
7	7	8	-54.4580	-59.1380	14.4240	-10.2479	-5.1205	-0.9052
8	8	9	-59.7753	-69.1353	5.4073	-39.8327	-0.9052	-68.0349
9	1	9	-39.8327	-39.8327	-65.5200	65.5200	68.0349	68.0349

****
***** Transition of Diversion Outlet *****
***** MAXIMUM MOMENT *****
****

MEMBER	JOINT	DIS.(FROM I)	MOMENT	SHEAR FORCE	AXIAL FORCE
1	1- 2	3.434	0.355	0.000	-60.894
2	2- 3	0.839	3.391	0.000	-57.194
3	3- 4	1.108	3.047	0.000	-52.493
4	4- 5	1.077	5.607	0.000	-49.507
5	5- 6	0.942	5.607	0.000	-49.507
6	6- 7	0.910	3.047	0.000	-52.493
7	7- 8	1.180	3.392	0.000	-57.194
8	8- 9	0.466	0.355	0.000	-60.894
9	1- 9	3.900	-59.729	0.000	-39.833

****
***** Transition of Diversion Outlet *****
***** CALCULATION OF INTERNAL STRESS IN REINFORCED CONCRETE *****
****

SIGCA = 91.0 KG/CM2
SIGSA = 2340.0 KG/CM2
SIGTAU= 11.1 KG/CM2

NOTES: * ;NO CALCULATION
** ;STEEL NOT NECESSARY
***;SECTION IS SMALL

MEM	POINT	B	H	D	DD	N	S	M	X	AS	ASD	SIGC	SIGS	SIGSD	TAU	
1	(1)	100.0	100.0	90.0	10.0	69.14	39.83	68.03	30.28	21.63	0.00	79.1	2340.0	0.0	5.0	
1	MAX	100.0	100.0	90.0	10.0	60.89	0.00	0.36	51.75	0.00	0.00	6.3	0.0	0.0	0.0	**
1	(2)	100.0	100.0	90.0	10.0	59.78	5.41	0.91	54.54	0.00	0.00	6.5	0.0	0.0	0.8	**
2	(2)	100.0	100.0	90.0	10.0	59.14	10.25	0.91	54.59	0.00	0.00	6.5	0.0	0.0	1.4	**
2	MAX	100.0	100.0	90.0	10.0	57.19	0.00	3.39	67.79	0.00	0.00	7.8	0.0	0.0	0.0	**
2	(3)	100.0	100.0	90.0	10.0	54.46	14.42	5.12	78.21	0.00	0.00	8.5	0.0	0.0	2.3	**
3	(3)	100.0	100.0	90.0	10.0	54.37	14.74	5.12	78.25	0.00	0.00	8.5	0.0	0.0	2.3	**
3	MAX	100.0	100.0	90.0	10.0	52.49	0.00	3.05	67.41	0.00	0.00	7.1	0.0	0.0	0.0	**
3	(4)	100.0	100.0	90.0	10.0	50.95	12.11	2.46	64.51	0.00	0.00	6.6	0.0	0.0	1.8	**
4	(4)	100.0	100.0	90.0	10.0	50.18	14.99	2.46	64.74	0.00	0.00	6.5	0.0	0.0	2.2	**
4	MAX	100.0	100.0	90.0	10.0	49.51	0.00	5.61	83.98	0.00	0.00	8.3	0.0	0.0	0.0	**
4	(5)	100.0	100.0	90.0	10.0	48.92	13.11	0.57	53.47	0.00	0.00	5.2	0.0	0.0	1.8	**
5	(5)	100.0	100.0	90.0	10.0	48.92	13.11	0.57	53.47	0.00	0.00	5.2	0.0	0.0	1.8	**
5	MAX	100.0	100.0	90.0	10.0	49.51	0.00	5.61	83.98	0.00	0.00	8.3	0.0	0.0	0.0	**
5	(6)	100.0	100.0	90.0	10.0	50.18	14.99	2.46	64.74	0.00	0.00	6.5	0.0	0.0	2.2	**
6	(6)	100.0	100.0	90.0	10.0	50.95	12.11	2.46	64.51	0.00	0.00	6.6	0.0	0.0	1.8	**
6	MAX	100.0	100.0	90.0	10.0	52.49	0.00	3.05	67.41	0.00	0.00	7.1	0.0	0.0	0.0	**
6	(7)	100.0	100.0	90.0	10.0	54.37	14.74	5.12	78.25	0.00	0.00	8.5	0.0	0.0	2.3	**
7	(7)	100.0	100.0	90.0	10.0	54.46	14.42	5.12	78.21	0.00	0.00	8.5	0.0	0.0	2.3	**
7	MAX	100.0	100.0	90.0	10.0	57.19	0.00	3.39	67.79	0.00	0.00	7.8	0.0	0.0	0.0	**
7	(8)	100.0	100.0	90.0	10.0	59.14	10.25	0.91	54.59	0.00	0.00	6.5	0.0	0.0	1.4	**
8	(8)	100.0	100.0	90.0	10.0	59.78	5.41	0.91	54.54	0.00	0.00	6.5	0.0	0.0	0.8	**
8	MAX	100.0	100.0	90.0	10.0	60.89	0.00	0.36	51.75	0.00	0.00	6.3	0.0	0.0	0.0	**
8	(9)	100.0	100.0	90.0	10.0	69.14	39.83	68.03	30.28	21.63	0.00	79.1	2340.0	0.0	5.0	
9	(1)	100.0	100.0	90.0	10.0	39.83	65.52	68.03	28.65	27.58	0.00	72.9	2340.0	0.0	8.1	
9	MAX	100.0	100.0	90.0	10.0	39.83	0.00	59.73	27.40	22.96	0.00	68.3	2340.0	0.0	0.0	
9	(9)	100.0	100.0	90.0	10.0	39.83	65.52	68.03	28.65	27.58	0.00	72.9	2340.0	0.0	8.1	

****
***** DATA LIST OF EXTERNAL LOAD *****
****

LOAD CASE= 2

ELEMENT NO.	TYPE	P	Q	XA	XB	ANGLE
1	2	2.400	2.400	0.000	0.000	-90.000
2	2	2.400	2.400	0.000	0.000	-75.000
3	2	2.400	2.400	0.000	0.000	-45.000
3	2	20.000	20.000	1.000	0.000	0.000
4	2	2.400	2.400	0.000	0.000	-15.000
4	2	20.000	20.000	0.000	0.000	0.000
5	2	2.400	2.400	0.000	0.000	15.000
5	2	20.000	20.000	0.000	0.000	0.000
6	2	2.400	2.400	0.000	0.000	45.000
6	2	20.000	20.000	0.000	1.000	0.000
7	2	2.400	2.400	0.000	0.000	75.000
8	2	2.400	2.400	0.000	0.000	90.000
9	2	-17.300	-17.300	0.000	0.000	0.000

****
***** Transition of Diversion Outlet *****
***** DISPLACEMENT AND REACTION *****
****

JOINT	DISPLACEMENT			REACTION		
	X-DIRECTION	Y-DIRECTION	R-DIRECTION	X-DIRECTION	Y-DIRECTION	R-DIRECTION
1	0.000000E+00	0.000000E+00	-8.484983E-04	-1.439057E-05	-9.833130E+00	-
2	1.592987E-03	1.110706E-04	9.067143E-05	-	-	-
3	9.438210E-04	3.379355E-04	5.497758E-04	-	-	-
4	1.200323E-04	1.213680E-03	5.271958E-04	-	-	-
5	7.574305E-06	1.779907E-03	-1.509522E-10	-	-	-
6	1.351810E-04	1.213679E-03	-5.271959E-04	-	-	-
7	9.589696E-04	3.379353E-04	-5.497754E-04	-	-	-
8	1.608135E-03	1.110706E-04	-9.067078E-05	-	-	-
9	1.514521E-05	0.000000E+00	8.484986E-04	-	-9.833168E+00	-

****
***** Transition of Diversion Outlet *****
***** SECTIONAL FORCE *****
****

MEMBER NO.	I-JOINT	J-JOINT	------AXIAL FORCE-------		------SHEAR FORCE-------		--------MOMENT----------	
			(I-JOINT)	(J-JOINT)	(I-JOINT)	(J-JOINT)	(I-JOINT)	(J-JOINT)
1	1	2	-77.3031	-67.9431	-4.9513	-4.9513	-41.4972	-60.8072
2	2	3	-66.9095	-62.2295	12.8024	11.5484	-60.8073	-36.2277
3	3	4	-48.1182	-44.6922	41.1160	17.3142	-36.2277	32.9393
4	4	5	-30.0475	-28.7935	37.3406	-7.7152	32.9394	62.8431
5	5	6	-28.7934	-30.0474	7.7152	-37.3406	62.8431	32.9394
6	6	7	-44.6922	-48.1182	-17.3142	-41.1160	32.9393	-36.2278
7	7	8	-62.2295	-66.9095	-11.5483	-12.8023	-36.2278	-60.8073
8	8	9	-67.9432	-77.3032	4.9513	4.9513	-60.8073	-41.4972
9	1	9	4.9513	4.9513	-67.4700	67.4700	41.4972	41.4972

****

***** Transition of Diversion Outlet *****

***** MAXIMUM MOMENT *****

****

MEMBER	JOINT	DIS.(FROM I)	MOMENT	SHEAR FORCE	AXIAL FORCE
1	1- 2	-			
2	2- 3	-			
3	3- 4	-			
4	4- 5	1.673	64.177	0.000	-29.008
5	5- 6	0.346	64.177	0.000	-29.008
6	6- 7	-			
7	7- 8	-			
8	8- 9	-			
9	1- 9	3.900	-90.069	0.000	4.951

****
***** Transition of Diversion Outlet *****
***** CALCULATION OF INTERNAL STRESS IN REINFORCED CONCRETE *****
****

SIGCA = 210.0 KG/CM2
SIGSA = 3000.0 KG/CM2
SIGTAU= 18.0 KG/CM2

NOTES: * ;NO CALCULATION
** ;STEEL NOT NECESSARY
***;SECTION IS SMALL

MEM	POINT	B	H	D	DD	N	S	M	X	AS	ASD	SIGC	SIGS	SIGSD	TAU	
1	(1)	100.0	100.0	90.0	10.0	77.30	4.95	41.50	24.13	3.69	0.00	73.2	3000.0	0.0	0.6	
1	MAX	100.0	100.0	90.0	10.0	0.00	0.00	0.00	0.00	0.00	0.00	0.0	0.0	0.0	0.0	*
1	(2)	100.0	100.0	90.0	10.0	67.94	4.95	60.81	26.27	13.45	0.00	82.4	3000.0	0.0	0.6	
2	(2)	100.0	100.0	90.0	10.0	66.91	12.80	60.81	26.22	13.62	0.00	82.2	3000.0	0.0	1.6	
2	MAX	100.0	100.0	90.0	10.0	0.00	0.00	0.00	0.00	0.00	0.00	0.0	0.0	0.0	0.0	*
2	(3)	100.0	100.0	90.0	10.0	62.23	11.55	36.23	22.38	3.94	0.00	66.2	3000.0	0.0	1.4	
3	(3)	100.0	100.0	90.0	10.0	48.12	41.12	36.23	21.43	6.28	0.00	62.5	3000.0	0.0	5.0	
3	MAX	100.0	100.0	90.0	10.0	0.00	0.00	0.00	0.00	0.00	0.00	0.0	0.0	0.0	0.0	*
3	(4)	100.0	100.0	90.0	10.0	44.69	17.31	32.94	20.60	5.48	0.00	59.4	3000.0	0.0	2.1	
4	(4)	100.0	100.0	90.0	10.0	30.05	37.34	32.94	19.48	7.93	0.00	55.3	3000.0	0.0	4.5	
4	MAX	100.0	100.0	90.0	10.0	29.01	0.00	64.18	24.61	21.21	0.00	75.3	3000.0	0.0	0.0	
4	(5)	100.0	100.0	90.0	10.0	28.79	7.72	62.84	24.41	20.68	0.00	74.4	3000.0	0.0	0.9	
5	(5)	100.0	100.0	90.0	10.0	28.79	7.72	62.84	24.41	20.68	0.00	74.4	3000.0	0.0	0.9	
5	MAX	100.0	100.0	90.0	10.0	29.01	0.00	64.18	24.61	21.21	0.00	75.3	3000.0	0.0	0.0	
5	(6)	100.0	100.0	90.0	10.0	30.05	37.34	32.94	19.48	7.93	0.00	55.3	3000.0	0.0	4.5	
6	(6)	100.0	100.0	90.0	10.0	44.69	17.31	32.94	20.60	5.48	0.00	59.4	3000.0	0.0	2.1	
6	MAX	100.0	100.0	90.0	10.0	0.00	0.00	0.00	0.00	0.00	0.00	0.0	0.0	0.0	0.0	*
6	(7)	100.0	100.0	90.0	10.0	48.12	41.12	36.23	21.43	6.28	0.00	62.5	3000.0	0.0	5.0	
7	(7)	100.0	100.0	90.0	10.0	62.23	11.55	36.23	22.38	3.94	0.00	66.2	3000.0	0.0	1.4	
7	MAX	100.0	100.0	90.0	10.0	0.00	0.00	0.00	0.00	0.00	0.00	0.0	0.0	0.0	0.0	*
7	(8)	100.0	100.0	90.0	10.0	66.91	12.80	60.81	26.22	13.62	0.00	82.2	3000.0	0.0	1.6	
8	(8)	100.0	100.0	90.0	10.0	67.94	4.95	60.81	26.27	13.45	0.00	82.4	3000.0	0.0	0.6	
8	MAX	100.0	100.0	90.0	10.0	0.00	0.00	0.00	0.00	0.00	0.00	0.0	0.0	0.0	0.0	*
8	(9)	100.0	100.0	90.0	10.0	77.30	4.95	41.50	24.13	3.69	0.00	73.2	3000.0	0.0	0.6	
9	(1)	100.0	100.0	90.0	10.0	-4.95	67.47	41.50	18.37	17.35	0.00	51.3	3000.0	0.0	8.0	
9	MAX	100.0	100.0	90.0	10.0	-4.95	0.00	90.07	26.28	37.79	0.00	82.5	3000.0	0.0	0.0	
9	(9)	100.0	100.0	90.0	10.0	-4.95	67.47	41.50	18.37	17.35	0.00	51.3	3000.0	0.0	8.0	

4. STRUCTURAL ANALYSIS OF OUTLET PORTAL

Fig. 1.1.13

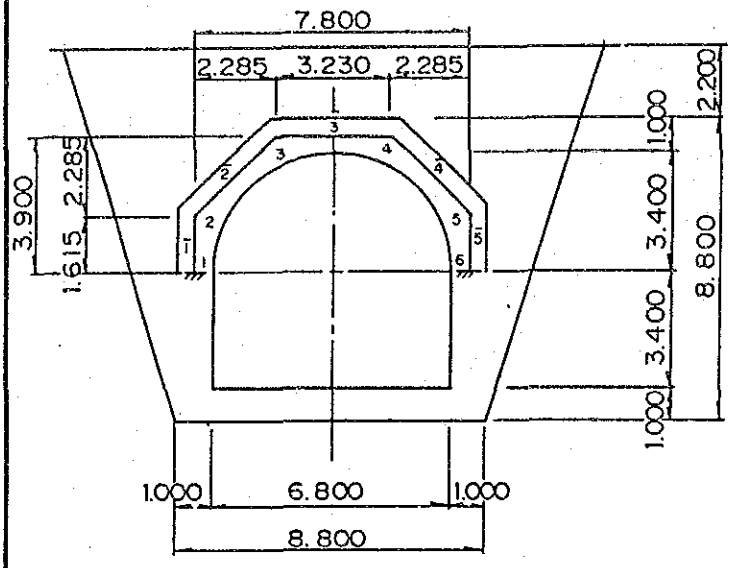

A = 1.0 m²
I = 0.0833 m⁴

	x (m)	y (m)
1	−3.900	3.900
2	−3.900	2.285
3	−1.615	0.000
4	1.615	0.000
5	3.900	2.285
6	3.900	3.900

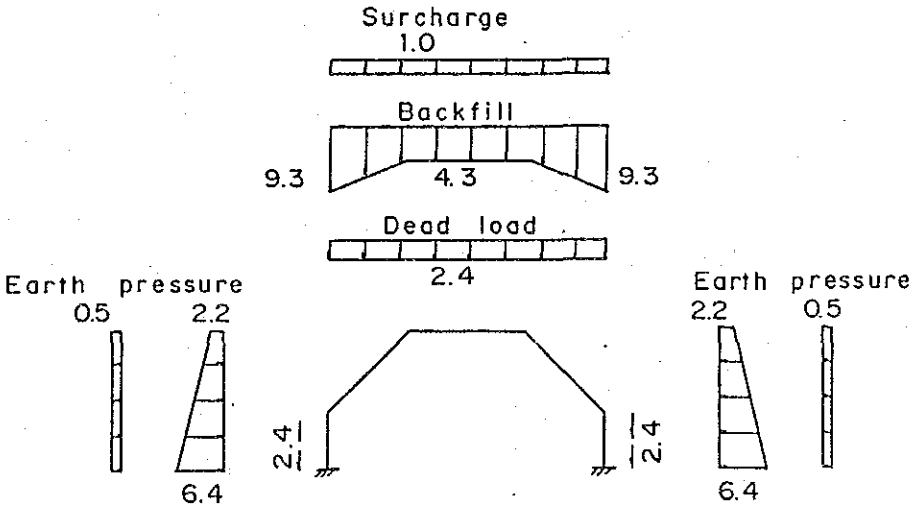

Load diagram of outlet portal

GOVERNMENT OF MAURITIUS
PORT LOUIS WATER SUPPLY PROJECT
JAPAN INTERNATIONAL COOPERATION AGENCY

Fig. 1.1.14

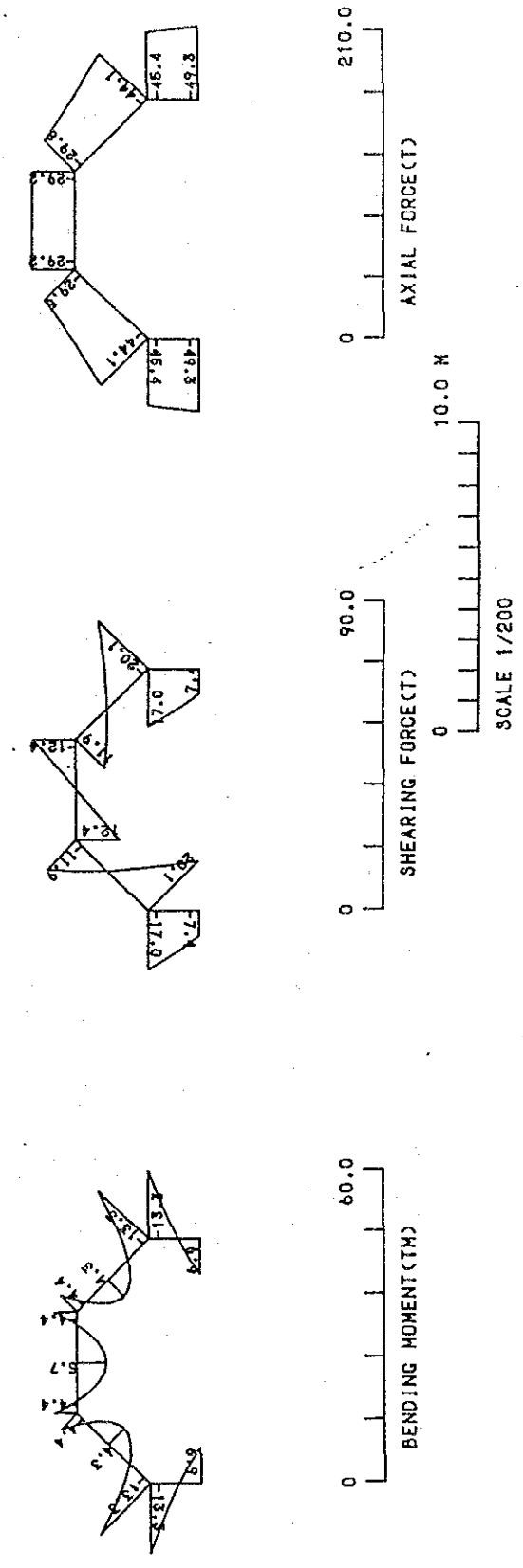

Bending moment shearing and axial force diagram, Outlet portal

GOVERNMENT OF MAURITIUS
PORT LOUIS WATER SUPPLY PROJECT
JAPAN INTERNATIONAL COOPERATION AGENCY

Parameter information

	Input	(Max. size)
NODAL POINT NUMBER (INP)-----	6	(100)
ELEMENT NUMBER (IEL)---------	5	(100)
MATERIAL NUMBER (IPR)--------	1	(10)
PROPATYL NUMBER (IMA)--------	1	(10)

Parameter set is OK. But you can reset Max. size to input.

****

*****　　FRAME ANALYSIS　　*****

*****　　Transition of Diversion Outlet　　*****

*****　　INPUT DATA LIST　　*****

****

NUMBER OF NODAL POINT----------　　6
NUMBER OF ELEMENT----------　　5
NUMBER OF MATERIAL PROPATIES-------　　1
NUMBER OF ELEMENT PROPATIES-------　　1
CASE NUMBER OF LOAD CONDITION------　　1
NUMBER OF ELASTIC SUPPORT----------　　0
TOLERANCE(DEFAULT=1.E-5) ----------　　1.000E-05

MATERIAL NO.	ELASTIC MODULUS
1	2.550000E+06

E.P.NO.	SECTIONAL AREA	MOMENT OF INAT.
1	1.000000E+00	8.330000E-02

****
***** DATA OF NODAL POINT *****
****

NODAL NO.	X-COORDINATE	Y-COORDINATE	D(X)	D(Y)	D(R)
1	-3.9000	3.9000	1	1	1
2	-3.9000	2.2850	0	0	0
3	-1.6150	0.0000	0	0	0
4	1.6150	0.0000	0	0	0
5	3.9000	2.2850	0	0	0
6	3.9000	3.9000	1	1	1

****
***** DATA OF ELEMENT *****
****

ELEMENT NO.	JOINT(I)	JOINT(J)	MAT.PR.	EL.PR.	CODE	E	A	I
1	1	2	1	1	0	2.55000E+06	1.00000E+00	8.33000E-02
2	2	3	1	1	0	2.55000E+06	1.00000E+00	8.33000E-02
3	3	4	1	1	0	2.55000E+06	1.00000E+00	8.33000E-02
4	4	5	1	1	0	2.55000E+06	1.00000E+00	8.33000E-02
5	5	6	1	1	0	2.55000E+06	1.00000E+00	8.33000E-02

ORIGINAL BAND WIDTH = 6
FINAL BAND WIDTH = 6

****
***** DATA LIST OF EXTERNAL LOAD *****
****

LOAD CASE= 1

ELEMENT NO.	TYPE	P	Q	XA	XB	ANGLE
1	2	6.900	4.900	0.000	0.000	0.000
1	2	2.400	2.400	0.000	0.000	-90.000
2	2	4.900	2.700	0.000	0.000	45.000
2	2	12.700	7.700	0.000	0.000	-45.000
3	2	7.700	7.700	0.000	0.000	0.000
4	2	7.700	12.700	0.000	0.000	45.000
4	2	2.700	4.900	0.000	0.000	-45.000
5	2	4.900	6.900	0.000	0.000	0.000
5	2	2.400	2.400	0.000	0.000	90.000

****
***** Transition of Diversion Outlet *****
***** DISPLACEMENT AND REACTION *****
****

JOINT	DISPLACEMENT			REACTION		
	X-DIRECTION	Y-DIRECTION	R-DIRECTION	X-DIRECTION	Y-DIRECTION	R-DIRECTION
1	0.000000E+00	0.000000E+00	0.000000E+00	7.423315E+00	-4.927258E+01	6.862248E+00
2	-8.922132E-06	2.997856E-05	1.455360E-05	-	-	-
3	1.851323E-05	1.223649E-04	1.762011E-05	-	-	-
4	-1.851324E-05	1.223649E-04	-1.762011E-05	-	-	-
5	8.922128E-06	2.997857E-05	-1.455361E-05	-	-	-
6	0.000000E+00	0.000000E+00	0.000000E+00	-7.423315E+00	-4.927258E+01	-6.862248E+00

****
***** Transition of Diversion Outlet *****
***** SECTIONAL FORCE *****
****

MEMBER NO.	I-JOINT	J-JOINT	------AXIAL FORCE-------		------SHEAR FORCE-------		--------MOMENT----------	
			(I-JOINT)	(J-JOINT)	(I-JOINT)	(J-JOINT)	(I-JOINT)	(J-JOINT)
1	1	2	-49.2726	-45.3966	-7.4233	-16.9518	6.8622	-13.2554
2	2	3	-44.0870	-29.4630	20.1135	-11.8765	-13.2554	-4.3769
3	3	4	-29.2314	-29.2314	12.4355	-12.4355	-4.3769	-4.3769
4	4	5	-29.4630	-44.0870	11.8765	-20.1135	-4.3769	-13.2554
5	5	6	-45.3966	-49.2726	16.9518	7.4233	-13.2554	6.8622

****
***** Transition of Diversion Outlet *****
***** MAXIMUM MOMENT *****
****

MEMBER	JOINT	DIS.(FROM I)	MOMENT	SHEAR FORCE	AXIAL FORCE
1	1- 2	-			
2	2- 3	1.828	4.323	0.000	-35.030
3	3- 4	1.615	5.665	0.000	-29.231
4	4- 5	1.404	4.323	0.000	-35.030
5	5- 6	-			

****
***** Transition of Diversion Outlet *****
***** CALCULATION OF INTERNAL STRESS IN REINFORCED CONCRETE *****
****

SIGCA = 70.0 KG/CM2
SIGSA = 1800.0 KG/CM2
SIGTAU= 8.5 KG/CM2

NOTES: * ;NO CALCULATION
** ;STEEL NOT NECESSARY
***;SECTION IS SMALL

MEM	POINT	B	H	D	DD	N	S	M	X	AS	ASD	SIGC	SIGS	SIGSD	TAU	
1	(1)	100.0	100.0	90.0	10.0	49.27	7.42	6.86	91.78	0.00	0.00	9.0	0.0	0.0	1.2	**
1	MAX	100.0	100.0	90.0	10.0	0.00	0.00	0.00	0.00	0.00	0.00	0.0	0.0	0.0	0.0	*
1	(2)	100.0	100.0	90.0	10.0	45.40	16.95	13.26	62.41	0.01	0.00	14.5	96.5	0.0	2.4	
2	(2)	100.0	100.0	90.0	10.0	44.09	20.11	13.26	59.81	0.01	0.00	14.7	111.7	0.0	2.9	
2	MAX	100.0	100.0	90.0	10.0	35.03	0.00	4.32	87.02	0.00	0.00	6.1	0.0	0.0	0.0	**
2	(3)	100.0	100.0	90.0	10.0	29.46	11.88	4.38	94.57	0.00	0.00	5.6	0.0	0.0	2.0	**
3	(3)	100.0	100.0	90.0	10.0	29.23	12.44	4.38	94.92	0.00	0.00	5.5	0.0	0.0	2.1	**
3	MAX	100.0	100.0	90.0	10.0	29.23	0.00	5.66	93.00	0.00	0.00	6.3	0.0	0.0	0.0	**
3	(4)	100.0	100.0	90.0	10.0	29.23	12.44	4.38	94.92	0.00	0.00	5.5	0.0	0.0	2.1	**
4	(4)	100.0	100.0	90.0	10.0	29.46	11.88	4.38	94.57	0.00	0.00	5.6	0.0	0.0	2.0	**
4	MAX	100.0	100.0	90.0	10.0	35.03	0.00	4.32	87.02	0.00	0.00	6.1	0.0	0.0	0.0	**
4	(5)	100.0	100.0	90.0	10.0	44.09	20.11	13.26	59.81	0.01	0.00	14.7	111.7	0.0	2.9	
5	(5)	100.0	100.0	90.0	10.0	45.40	16.95	13.26	62.41	0.01	0.00	14.5	96.5	0.0	2.4	
5	MAX	100.0	100.0	90.0	10.0	0.00	0.00	0.00	0.00	0.00	0.00	0.0	0.0	0.0	0.0	*
5	(6)	100.0	100.0	90.0	10.0	49.27	7.42	6.86	91.78	0.00	0.00	9.0	0.0	0.0	1.2	**

JICA