Plate No.	14

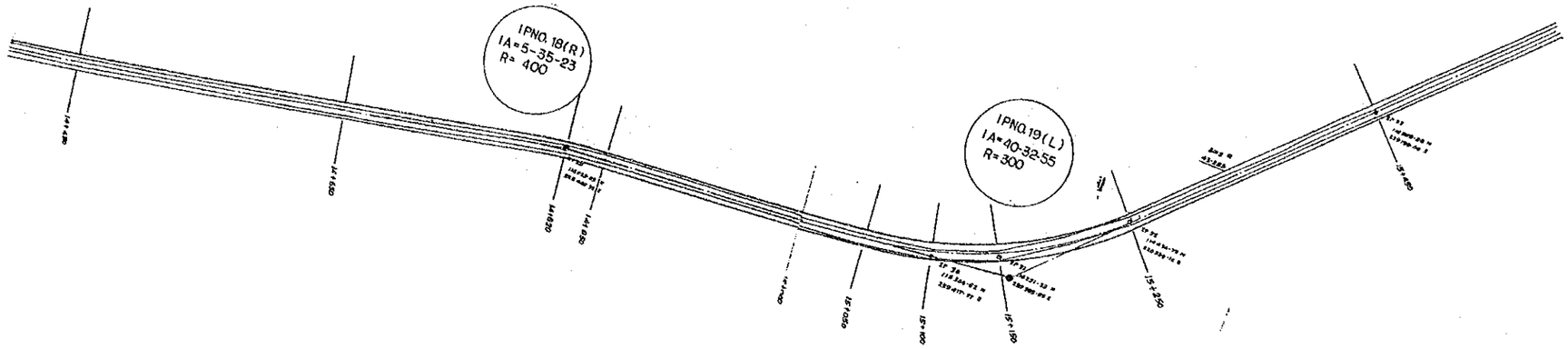

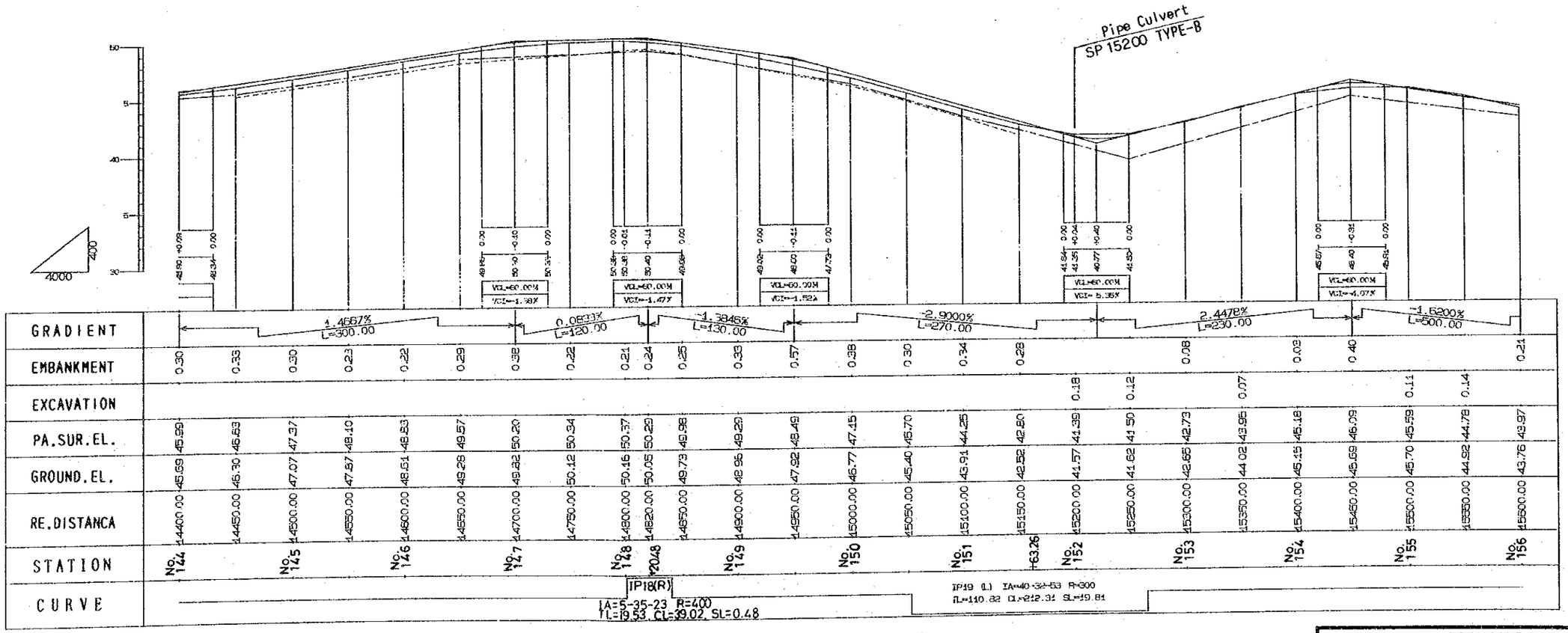

DEMOCRATIC SOCIALIST REPUBLIC OF SRI LANKA	
RURAL INFRASTRUCTURE IMPROVEMENT PROJECT IN WALAWE LEFT BANK AREA	
TITLE OF DRAWING 農 道 南北道路 平面縦断図 (13/16)	
DATE	DRAWING No.
JAPAN INTERNATIONAL COOPERATION AGENCY	

Plate No.	15

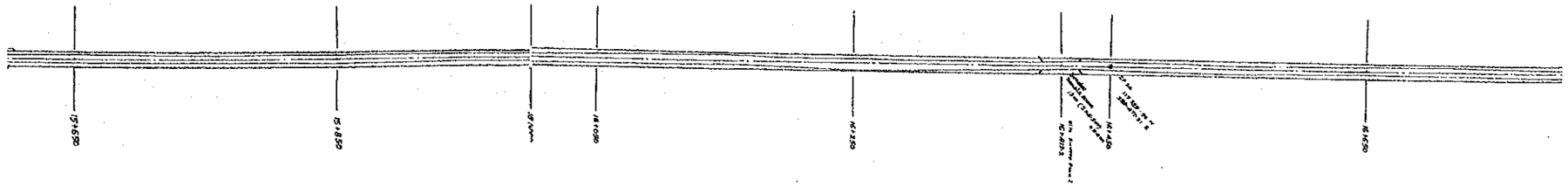

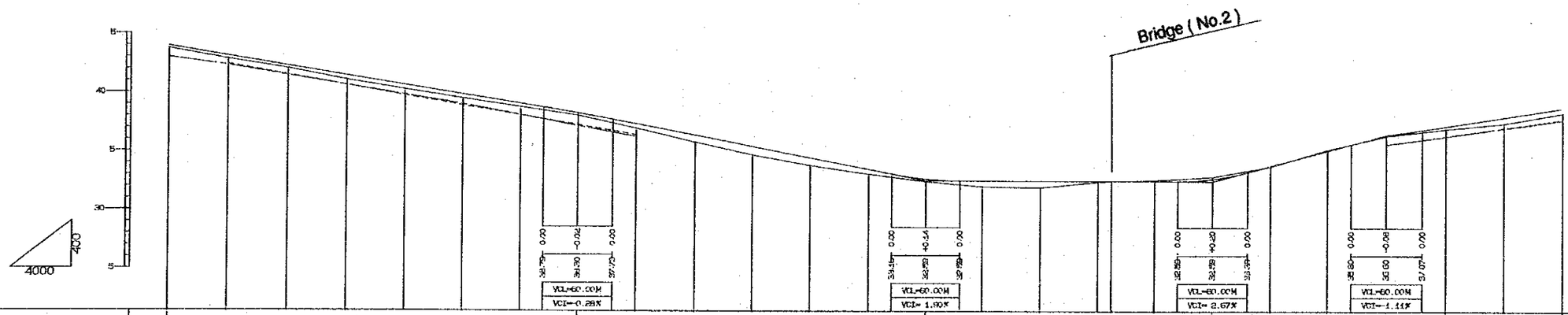

GRADIENT	-1.6200% L=500.00								-1.9033% L=300.00					LEVEL L=250.00					2.6733% L=150.00			1.5600% L=250.00			
EMBANKMENT	0.21	0.27	0.25	0.38	0.37	0.35	0.30	0.20	0.38	0.51	0.73	0.64	0.41	0.21	0.50	0.57	0.08			0.06			0.24	0.53	0.43
EXCAVATION																		0.07	0.18		0.07	0.02			
PA.SUR.EL.	43.97	43.16	42.35	41.54	40.73	39.92	39.11	38.28	37.35	36.40	35.45	34.49	33.54	32.73	32.59	32.59	32.59	32.59	32.79	33.93	35.26	36.52	37.38	38.16	38.94
GROUND.EL.	43.76	42.89	42.12	41.16	40.36	39.57	38.81	38.08	36.97	35.79	34.72	33.65	33.13	32.52	32.09	32.02	32.54	32.66	32.97	33.27	35.33	36.54	37.14	37.63	36.51
RE.DISTANCA	15600.00	15650.00	15700.00	15750.00	15800.00	15850.00	15900.00	15950.00	16000.00	16050.00	16100.00	16150.00	16200.00	16250.00	16300.00	16350.00	16400.00	16450.00	16500.00	16550.00	16600.00	16650.00	16700.00	16750.00	16800.00
STATION	No. 156		No. 157		No. 158		No. 159		No. 160		No. 161		No. 162		No. 163		No. 164		No. 165		No. 166		No. 167		No. 168
CURVE																									

DEMOCRATIC SOCIALIST REPUBLIC OF SRI LANKA	
RURAL INFRASTRUCTURE IMPROVEMENT PROJECT IN WALAWE LEFT BANK AREA	
TITLE OF DRAWING 農 道 南北道路 平面縦断図 (14/16)	
DATE	DRAWING No.
JAPAN INTERNATIONAL COOPERATION AGENCY	

Plate No.	16

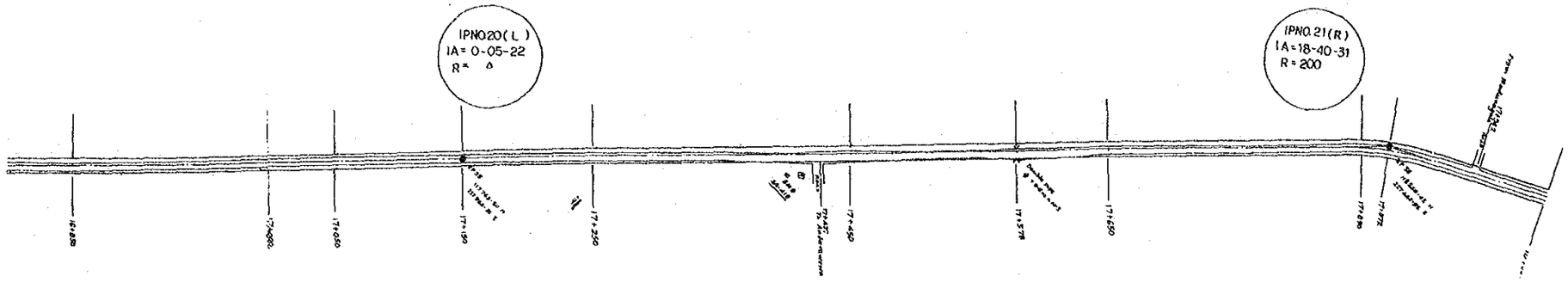

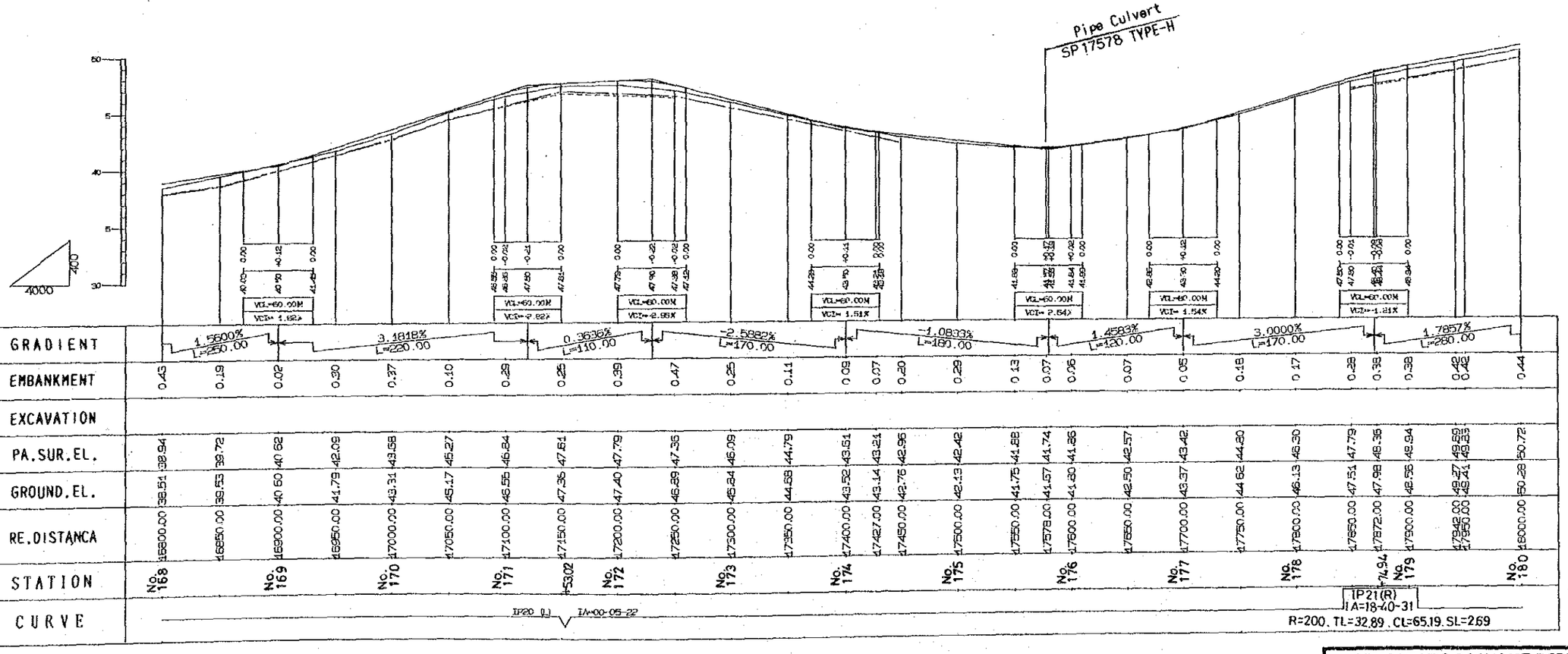

DEMOCRATIC SOCIALIST REPUBLIC OF SRI LANKA	
RURAL INFRASTRUCTURE IMPROVEMENT PROJECT IN WALAWE LEFT BANK AREA	
TITLE OF DRAWING 農 道 南北道路 平面縦断図 (15/16)	
DATE	DRAWING No.
JAPAN INTERNATIONAL COOPERATION AGENCY	

Plate No.	17

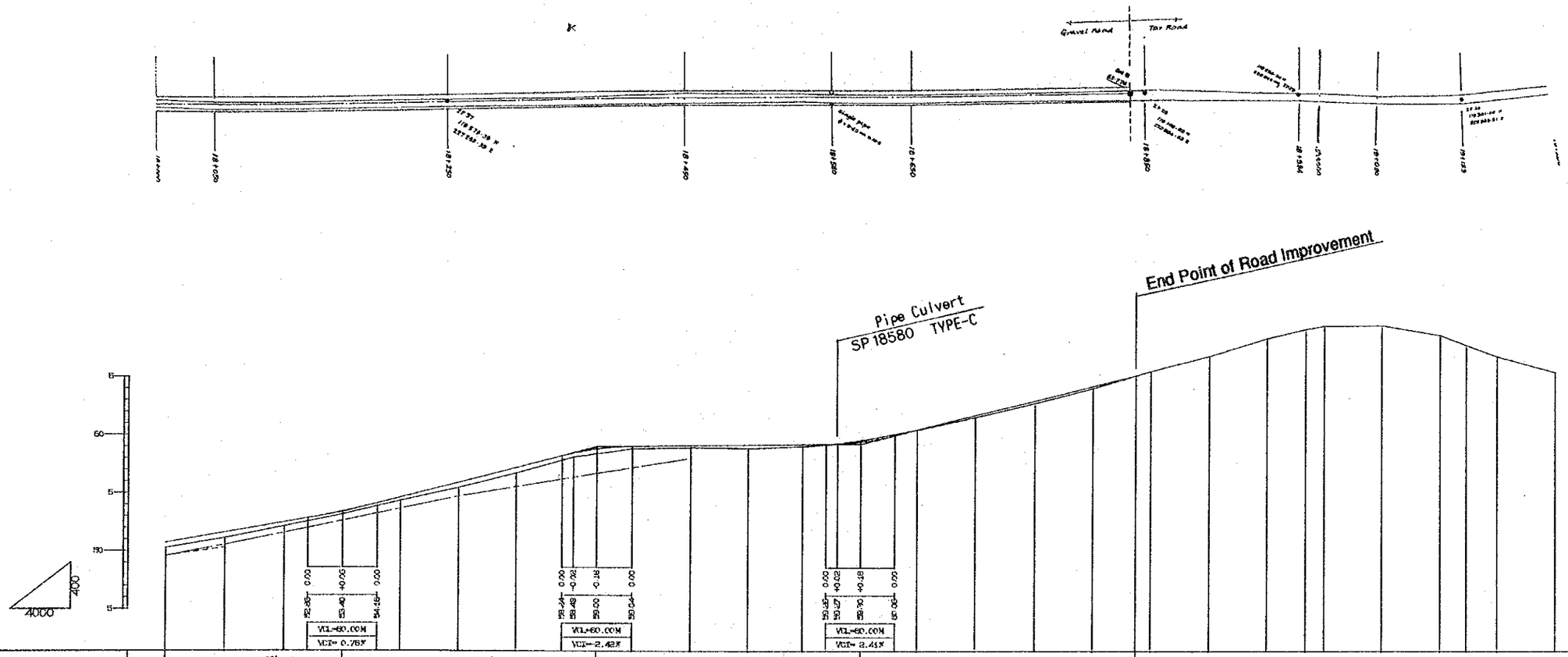
Gravel Road
Tar Road
Pipe Culvert
SP 18580 TYPE-C
End Point of Road Improvement
4000
4000
VCL=60.00M
VCI= 0.78%
VCL=60.00M
VCI=-2.42%
VCL=60.00M
VCI= 2.41%

| | | |

Plate No.	18

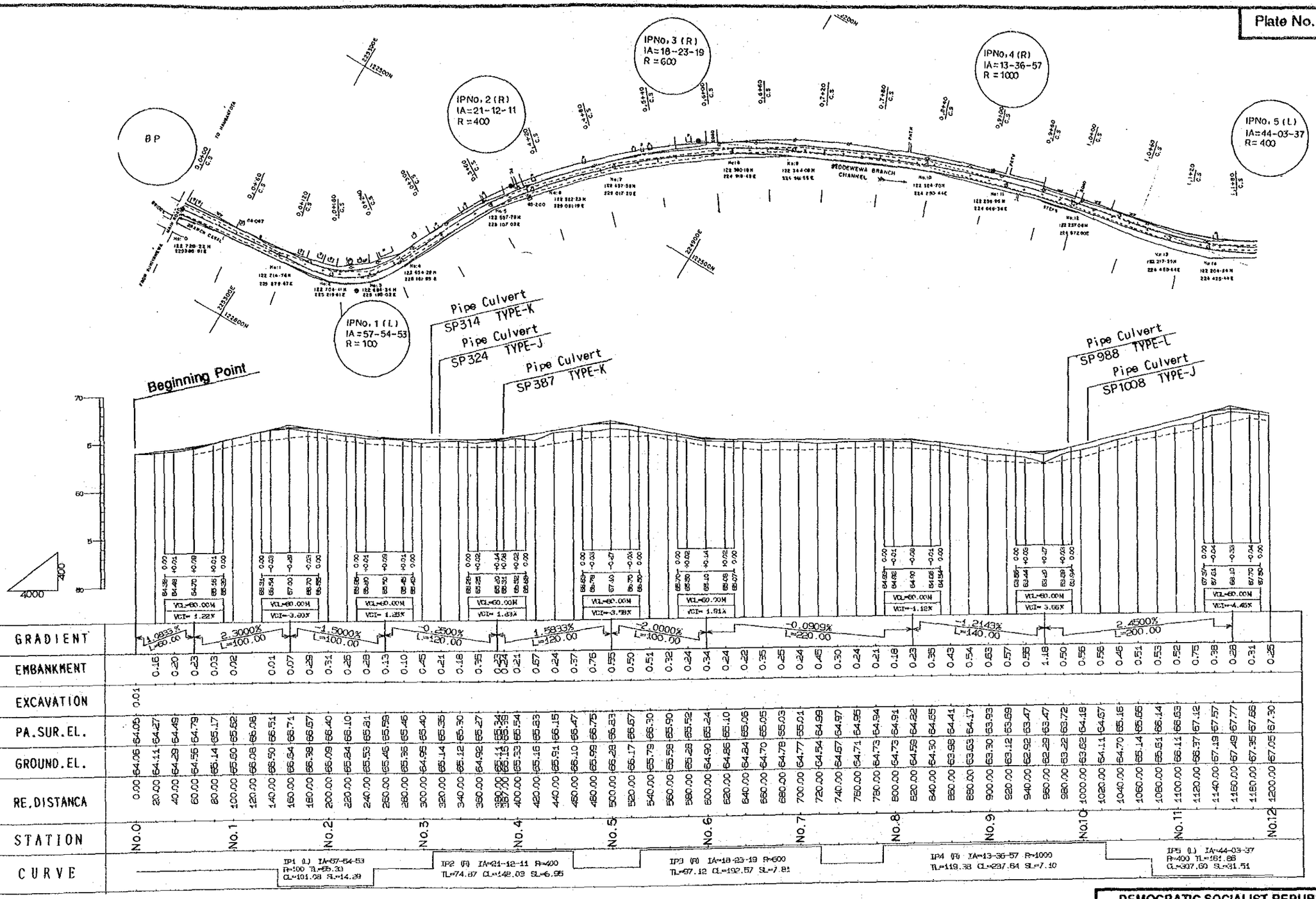

LEGEND

PA.SUR.EL	Pavement Surface Elevation
RE.DISTANCE	Reduced Distance
- - - - - - - -	Drain Base (Left Side)
— · — · — · —	Drain Base (Right Side)

DEMOCRATIC SOCIALIST REPUBLIC OF SRI LANKA

RURAL INFRASTRUCTURE IMPROVEMENT PROJECT
IN WALAWE LEFT BANK AREA

TITLE OF DRAWING

農 道

東西道路 平面縦断図 (1/11)

DATE		DRAWING No.	

JAPAN INTERNATIONAL COOPERATION AGENCY

Plate No.	19

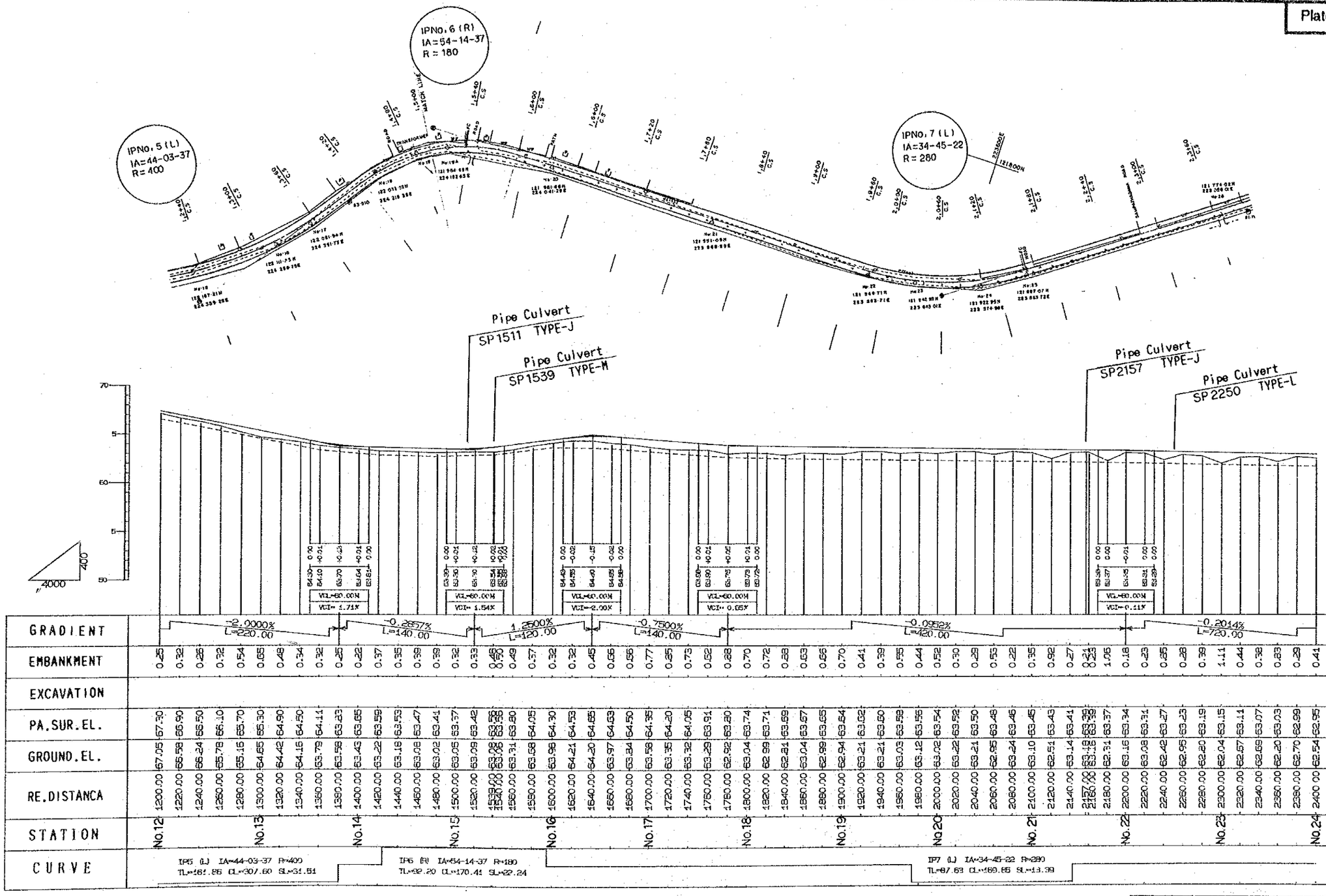

DEMOCRATIC SOCIALIST REPUBLIC OF SRI LANKA			
RURAL INFRASTRUCTURE IMPROVEMENT PROJECT IN WALAWE LEFT BANK AREA			
TITLE OF DRAWING 農 道 東西道路 平面縦断図 (2/11)			
DATE		DRAWING No.	
JAPAN INTERNATIONAL COOPERATION AGENCY			

Plate No.	20

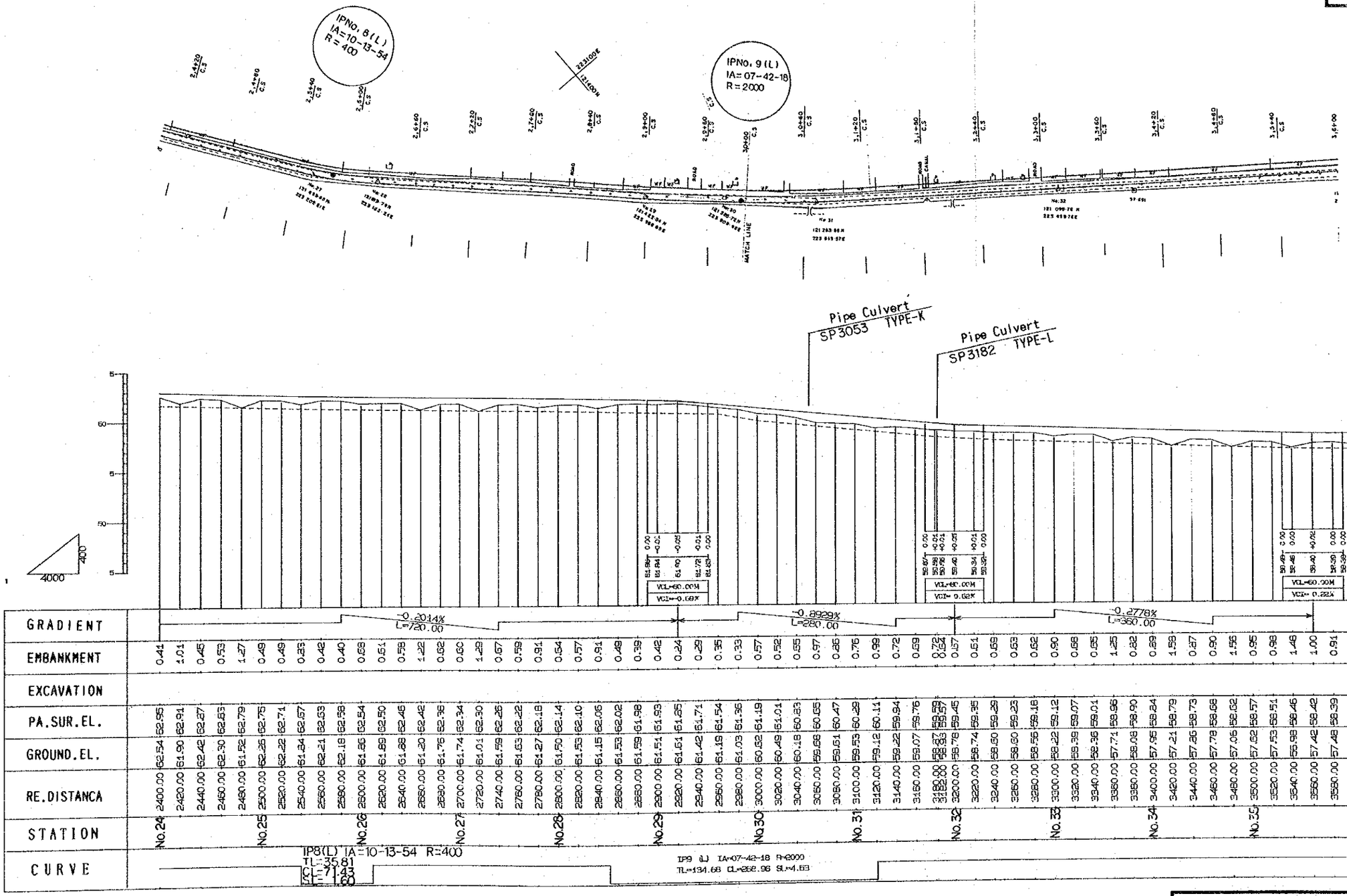

DEMOCRATIC SOCIALIST REPUBLIC OF SRI LANKA	
RURAL INFRASTRUCTURE IMPROVEMENT PROJECT IN WALAWE LEFT BANK AREA	
TITLE OF DRAWING 農 道 東西道路 平面縦断図 (3/11)	
DATE	DRAWING No.
JAPAN INTERNATIONAL COOPERATION AGENCY	

Plate No.	21

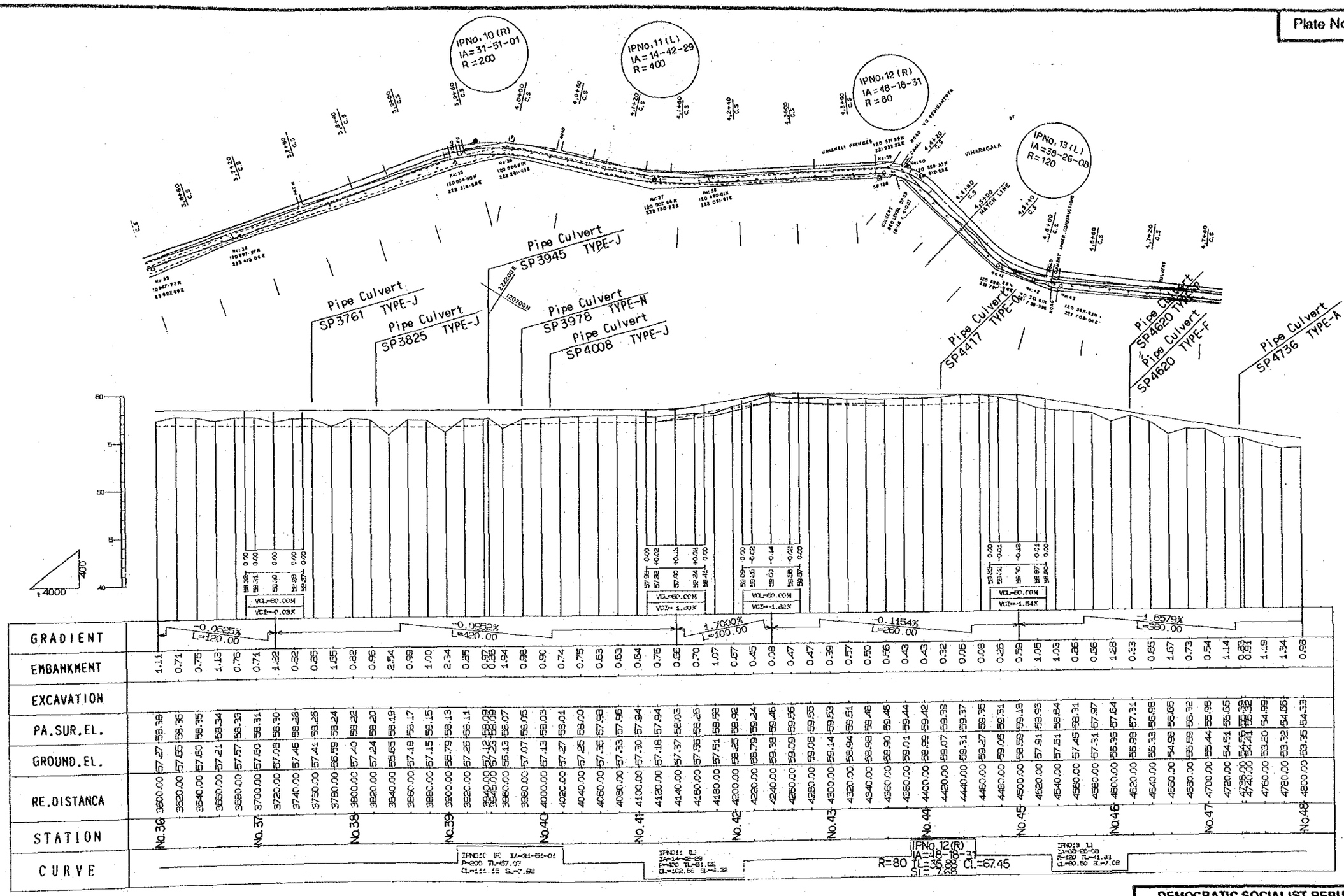

DEMOCRATIC SOCIALIST REPUBLIC OF SRI LANKA	
RURAL INFRASTRUCTURE IMPROVEMENT PROJECT IN WALAWE LEFT BANK AREA	
TITLE OF DRAWING 農 道 東西道路 平面縦断図 (4/11)	
DATE	DRAWING No.
JAPAN INTERNATIONAL COOPERATION AGENCY	

Plate No.	22

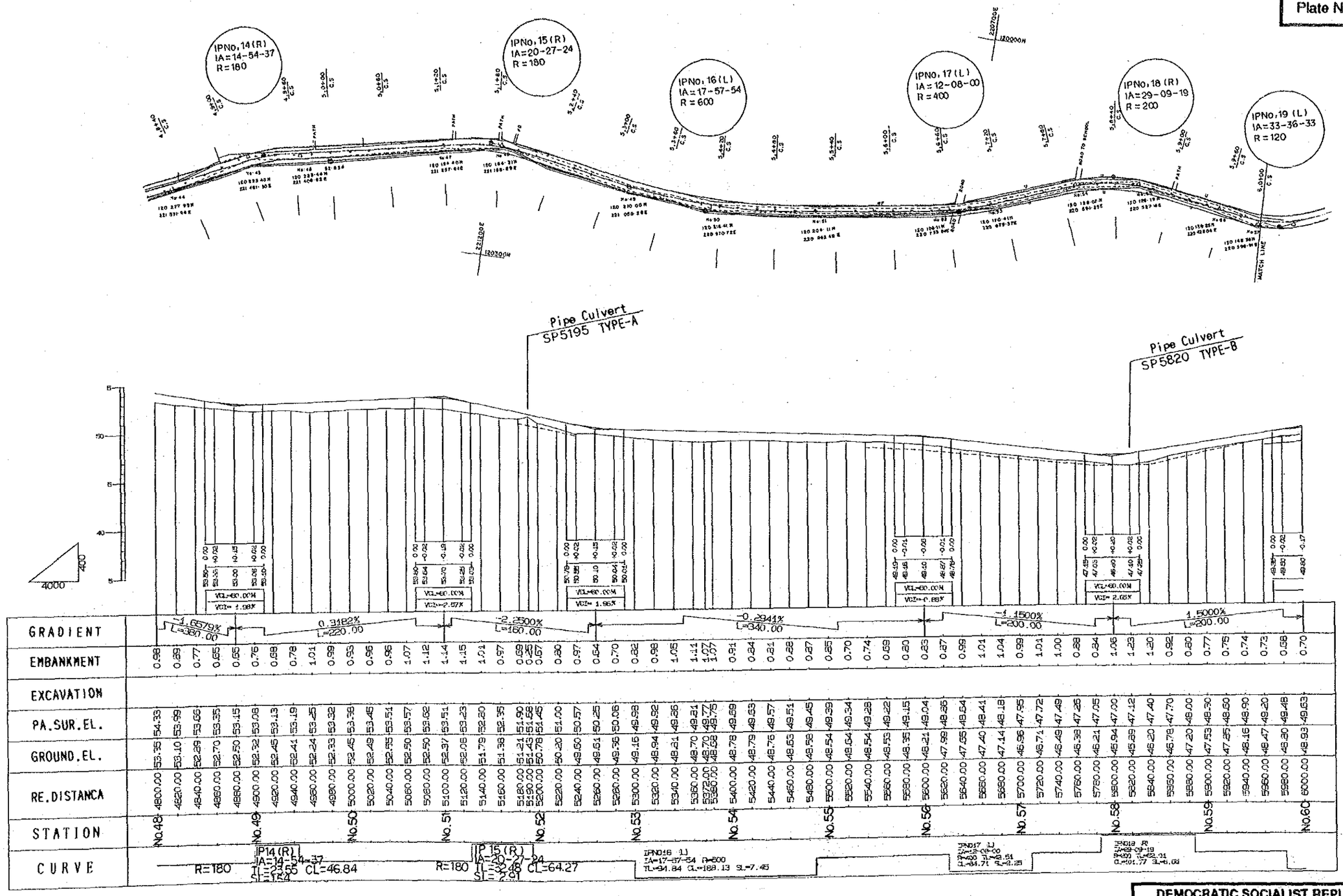

DEMOCRATIC SOCIALIST REPUBLIC OF SRI LANKA	
RURAL INFRASTRUCTURE IMPROVEMENT PROJECT IN WALAWE LEFT BANK AREA	
TITLE OF DRAWING 農 道 東西道路 平面縦断図 (5/11)	
DATE	DRAWING No.
JAPAN INTERNATIONAL COOPERATION AGENCY	

Plate No.	23

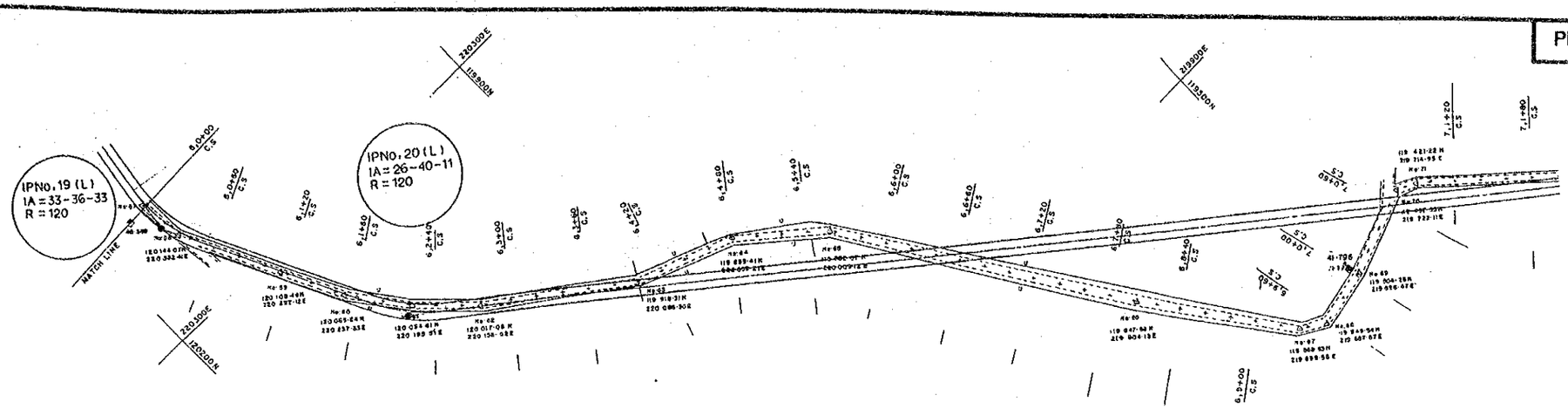
IPNo.19 (L)
IA = 33-36-33
R = 120
IPNo.20 (L)
IA = 26-40-11
R = 120
MATCH LINE

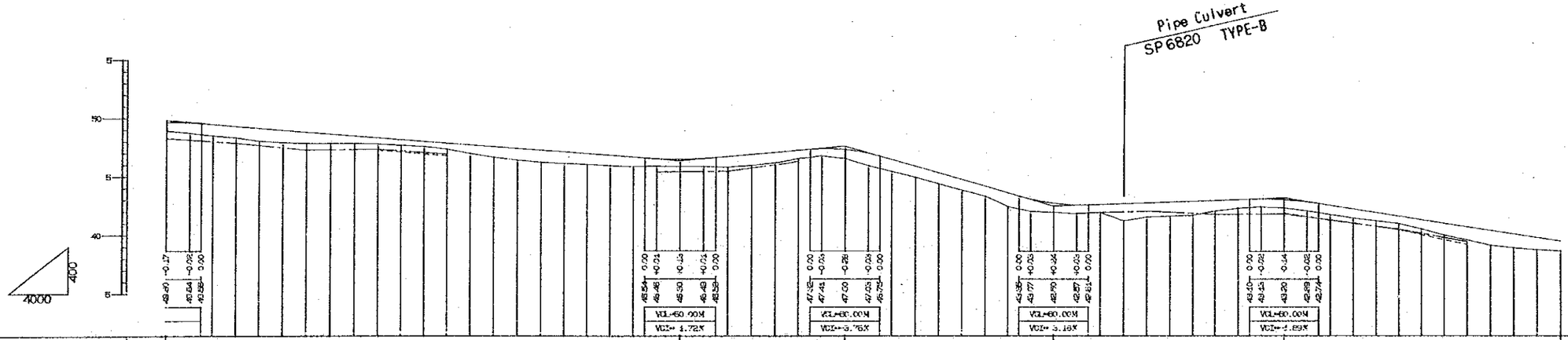
Pipe Culvert
SP6820 TYPE-B
400
4000

| | | |

Plate No.	24

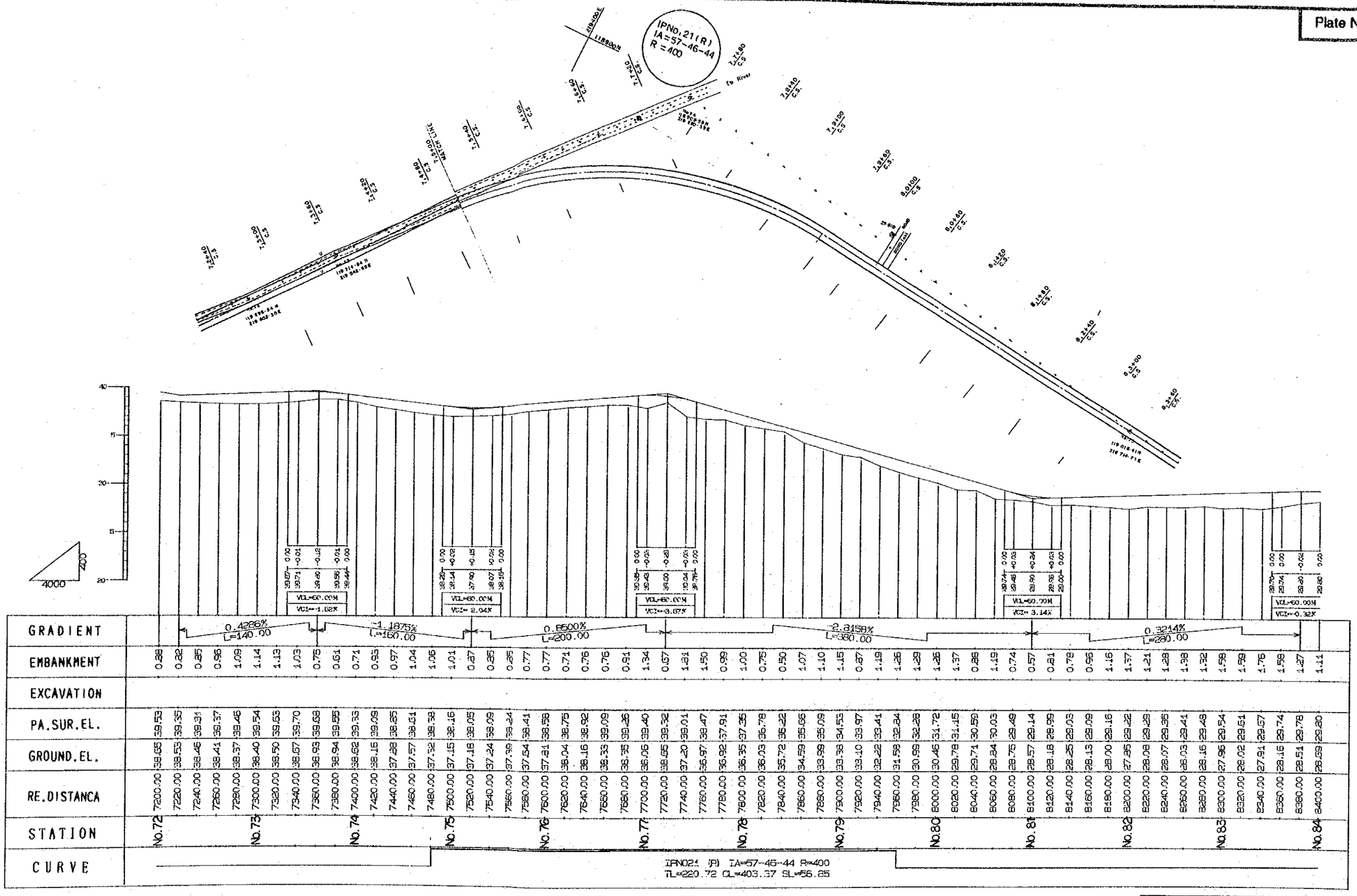

DEMOCRATIC SOCIALIST REPUBLIC OF SRI LANKA	
RURAL INFRASTRUCTURE IMPROVEMENT PROJECT IN WALAWE LEFT BANK AREA	
TITLE OF DRAWING 農 道 東西道路 平面縦断図 (7/11)	
DATE	DRAWING No.
JAPAN INTERNATIONAL COOPERATION AGENCY	

Plate No.	25

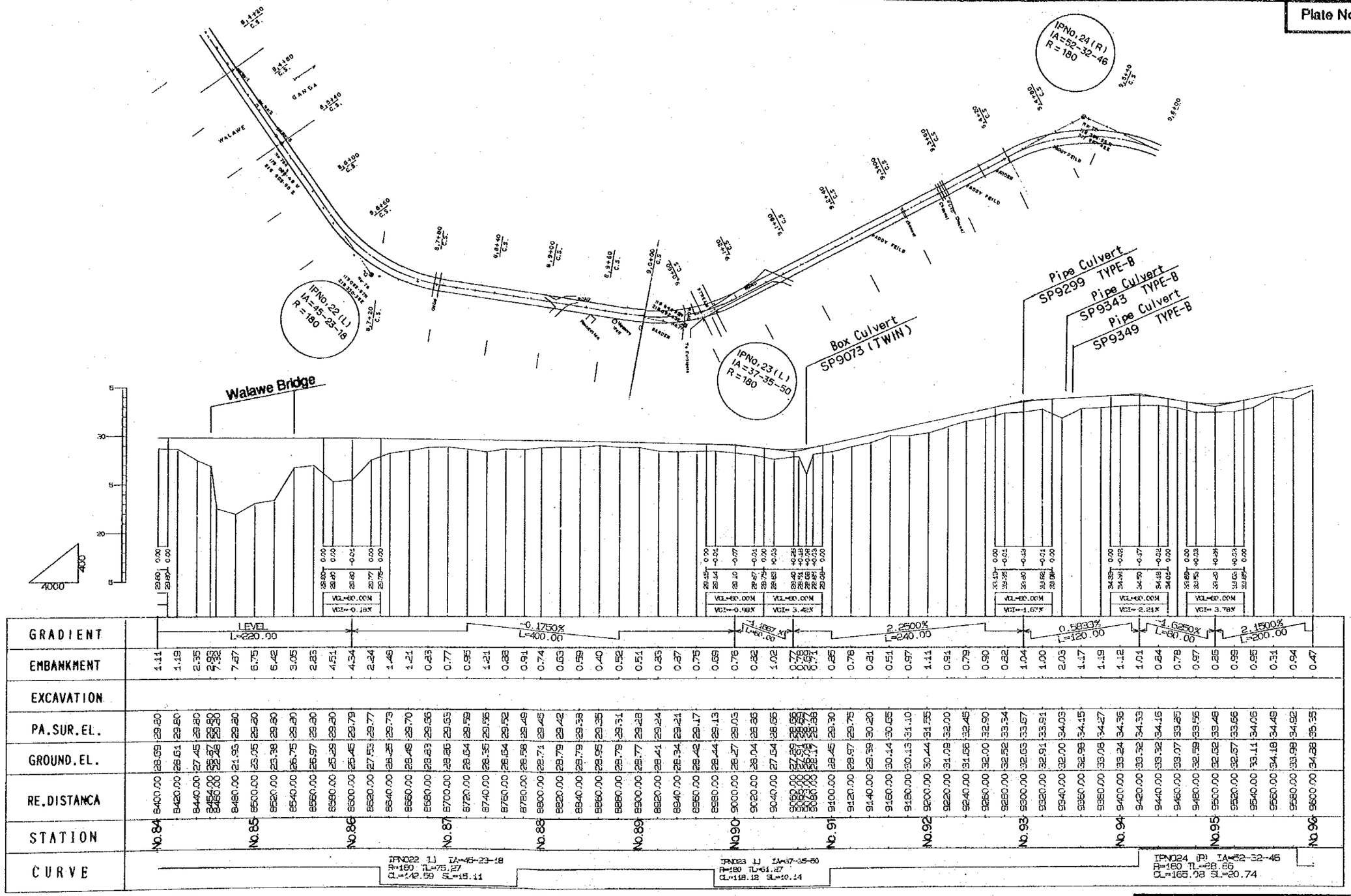

DEMOCRATIC SOCIALIST REPUBLIC OF SRI LANKA

RURAL INFRASTRUCTURE IMPROVEMENT PROJECT
IN WALAWE LEFT BANK AREA

TITLE OF DRAWING

農　道

東西道路　平面縦断図 (8/11)

DATE		DRAWING No.	

JAPAN INTERNATIONAL COOPERATION AGENCY

Plate No. 26

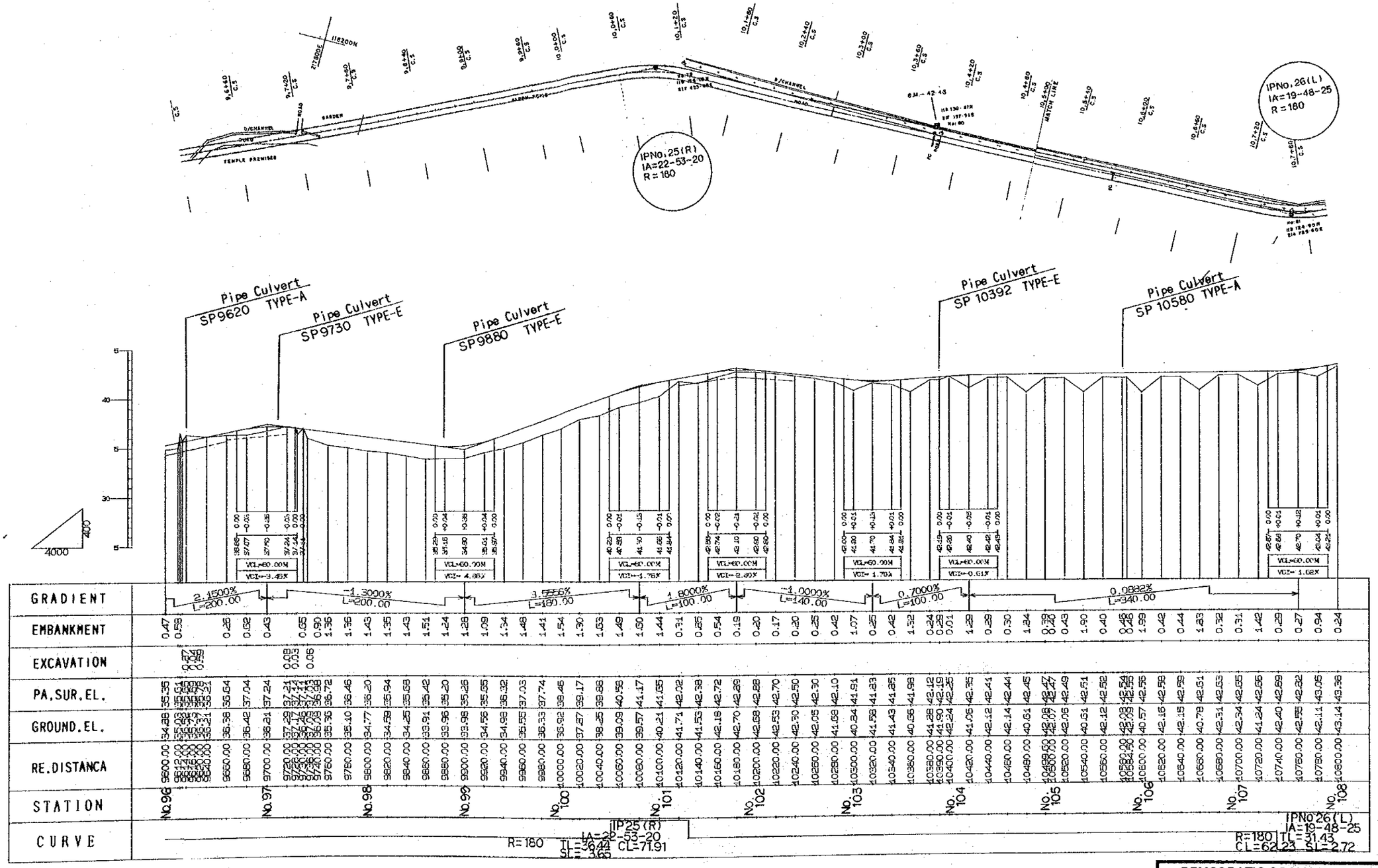

DEMOCRATIC SOCIALIST REPUBLIC OF SRI LANKA

RURAL INFRASTRUCTURE IMPROVEMENT PROJECT
IN WALAWE LEFT BANK AREA

TITLE OF DRAWING

農　道

東西道路　平面縦断図 (9/11)

DATE | DRAWING No.

JAPAN INTERNATIONAL COOPERATION AGENCY

Plate No.	27

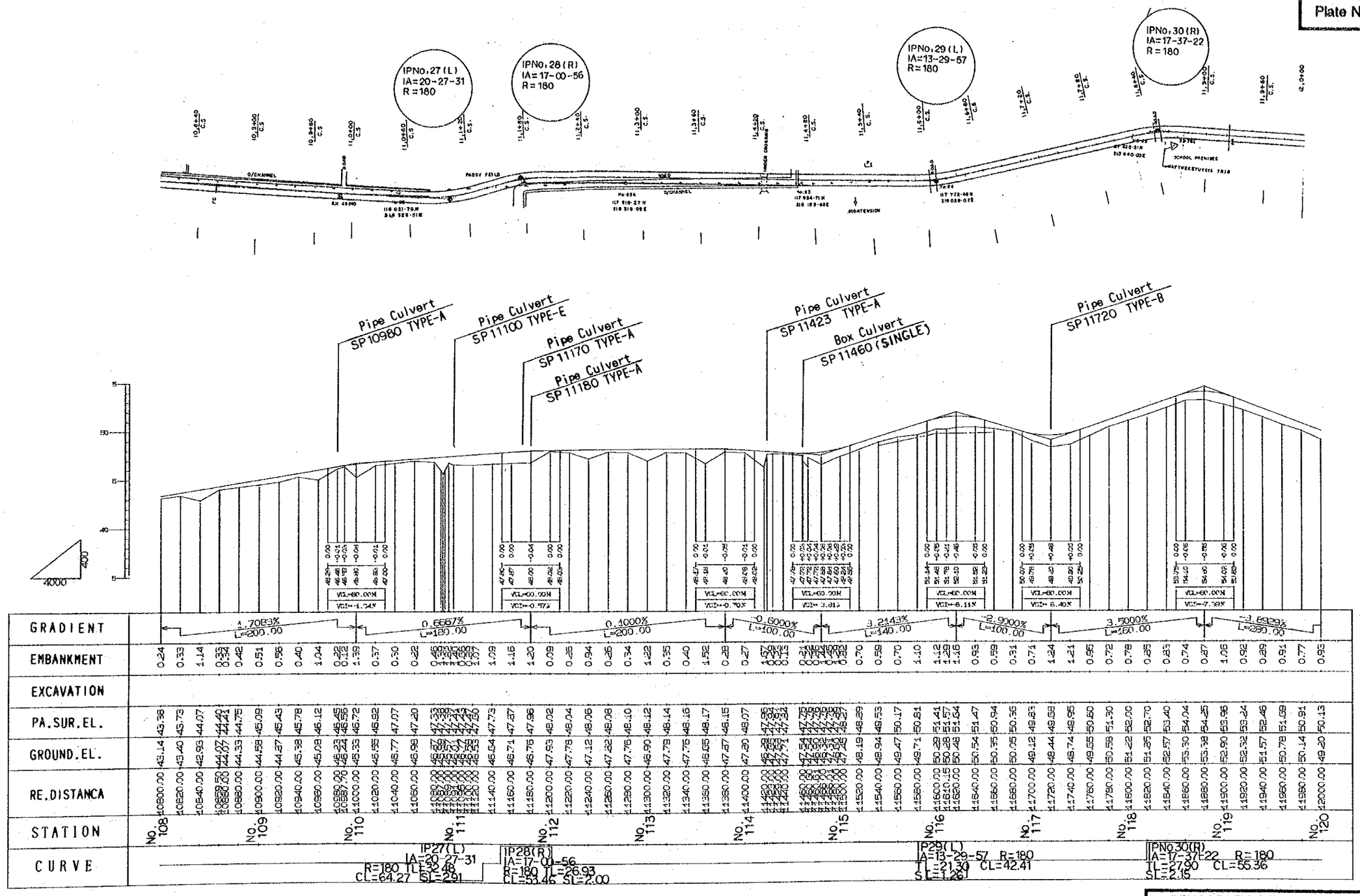

DEMOCRATIC SOCIALIST REPUBLIC OF SRI LANKA

RURAL INFRASTRUCTURE IMPROVEMENT PROJECT
IN WALAWE LEFT BANK AREA

TITLE OF DRAWING

農　道
東西道路　平面縦断図 (10/11)

DATE		DRAWING No.	

JAPAN INTERNATIONAL COOPERATION AGENCY

Plate No.	28

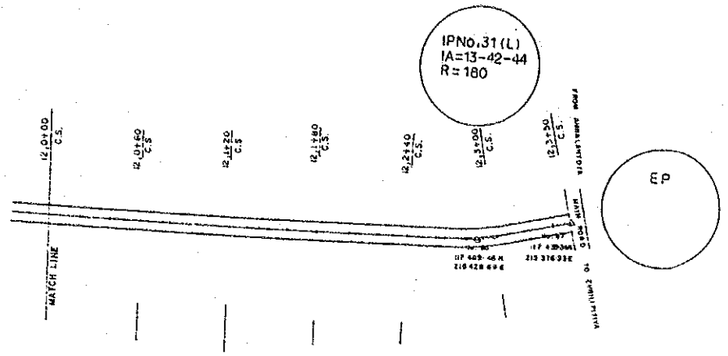

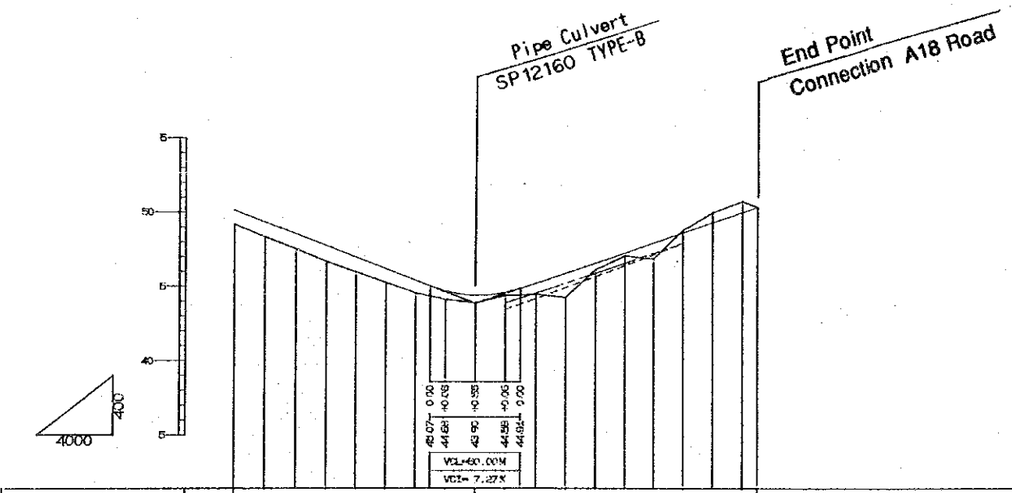

GRADIENT	-5.8929% L=280.00																				3.3789% L=190.00							
EMBANKMENT	0.93	0.99	1.02	1.08	1.00	0.94	0.86	0.57	0.52	0.21	0.75	1.64	0.44	0.19	1.07													
EXCAVATION																0.16	0.65	0.74										
PA.SUR.EL.	50.13	49.35	48.57	47.79	47.01	46.24	45.46	44.74	44.45	44.54	45.25	45.93	46.60	47.28	47.95	48.53	49.31	49.98	50.32									
GROUND.EL.	49.20	48.38	47.55	46.74	46.01	45.30	44.60	44.17	43.95	44.43	44.50	44.28	46.16	47.09	46.88	48.79	49.96	50.72	50.32									
RE.DISTANCA	12000.00	12020.00	12040.00	12060.00	12080.00	12100.00	12120.00	12140.00	12160.00	12180.00	12200.00	12220.00	12240.00	12260.00	12280.00	12300.00	12320.00	12340.00	12350.00									
STATION	No. 120					No. 121					No. 122					No. 123												
CURVE	IP31(L) IA=13-42-44 R=180 TL=21.64 CL=43.08 SL=1.30																											

DEMOCRATIC SOCIALIST REPUBLIC OF SRI LANKA			
RURAL INFRASTRUCTURE IMPROVEMENT PROJECT IN WALAWE LEFT BANK AREA			
TITLE OF DRAWING 農 道 東西道路 平面縦断図 (11/11)			
DATE		DRAWING No.	
JAPAN INTERNATIONAL COOPERATION AGENCY			

Plate No.	29

TYPICAL CROSS SECTION

SCALE 1 : 50

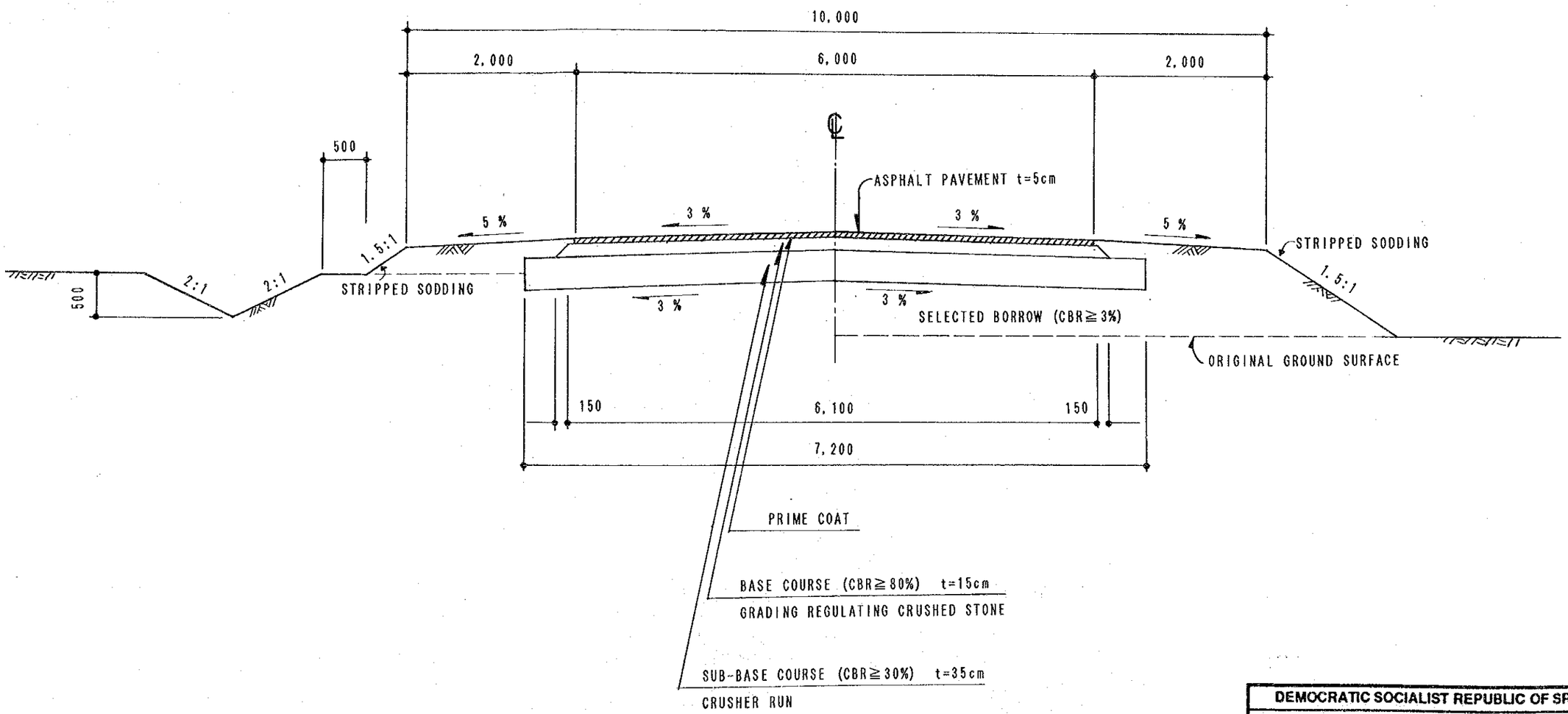

DEMOCRATIC SOCIALIST REPUBLIC OF SRI LANKA			
RURAL INFRASTRUCTURE IMPROVEMENT PROJECT IN WALAWE LEFT BANK AREA			
TITLE OF DRAWING 農 道 標準断面図			
DATE		DRAWING No.	
JAPAN INTERNATIONAL COOPERATION AGENCY			

Plate No.	30

PLAN OF SINGLE CULVERT
TYPE A ~ F 1:200

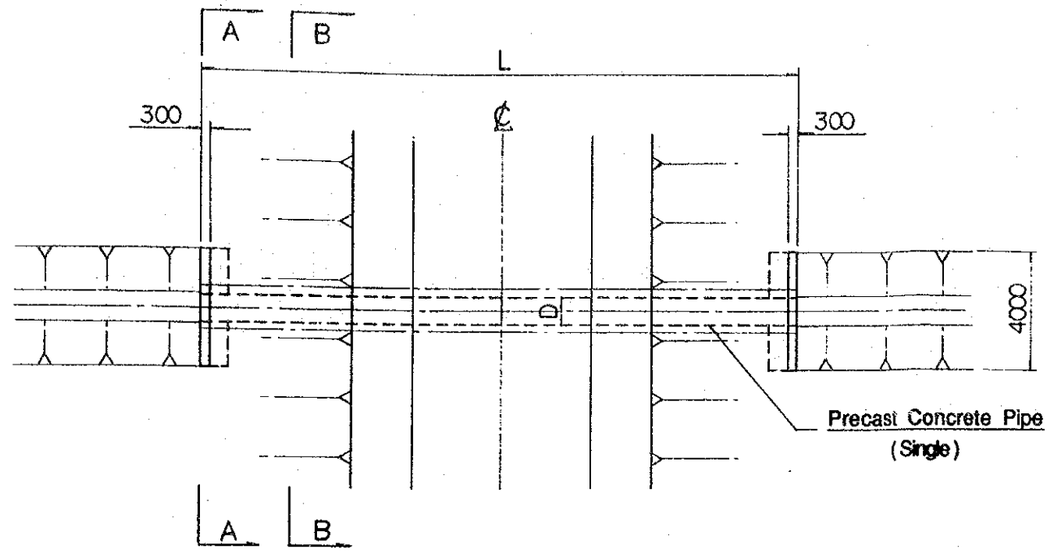

PLAN OF TWIN CULVERT
TYPE G ~ I 1:200

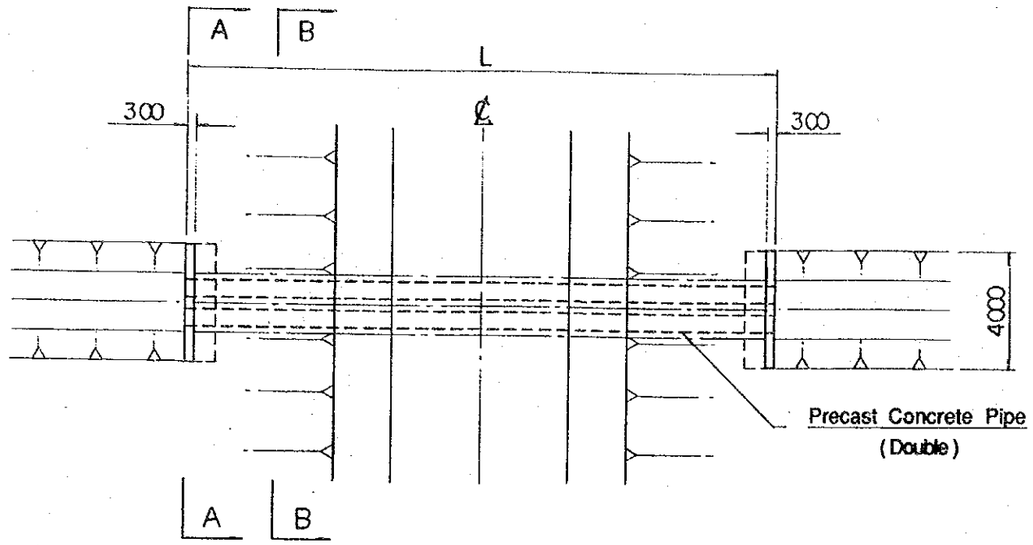

PROFILE
1:200

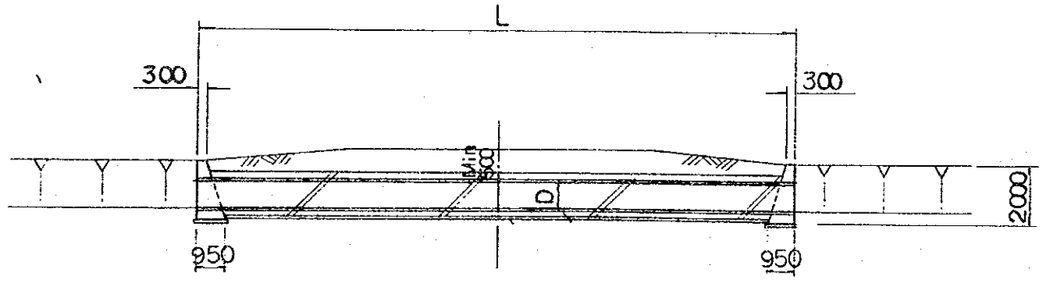

PROFILE
1:200

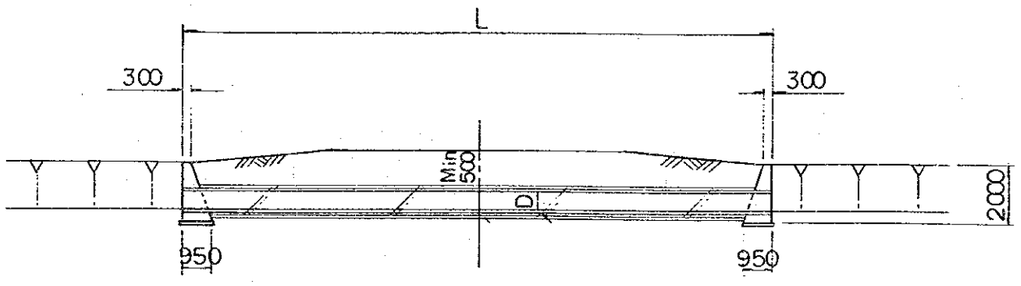

SECTION A - A
1:100

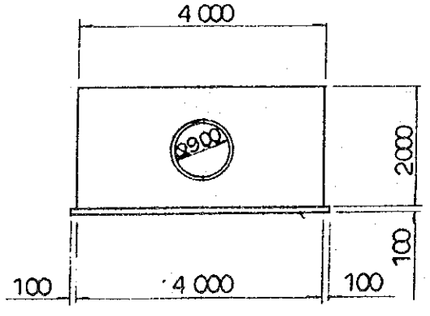

SECTION B - B
1:50

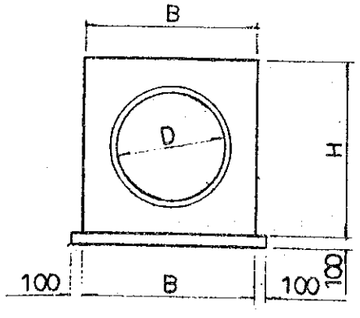

SECTION A - A
1:100

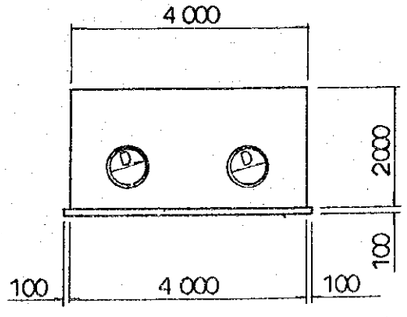

SECTION B - B
1:50

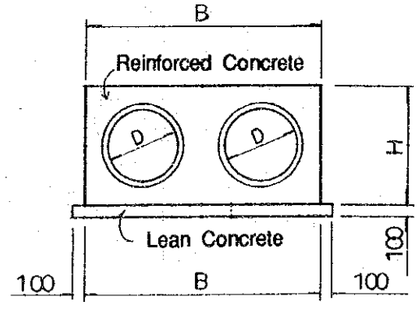

DEMOCRATIC SOCIALIST REPUBLIC OF SRI LANKA	
RURAL INFRASTRUCTURE IMPROVEMENT PROJECT IN WALAWE LEFT BANK AREA	
TITLE OF DRAWING 農 道 道路付帯工／管渠工 (1/3)	
DATE	DRAWING No.
JAPAN INTERNATIONAL COOPERATION AGENCY	

Plate No.	31

PLAN

TYPE J~P 1:200

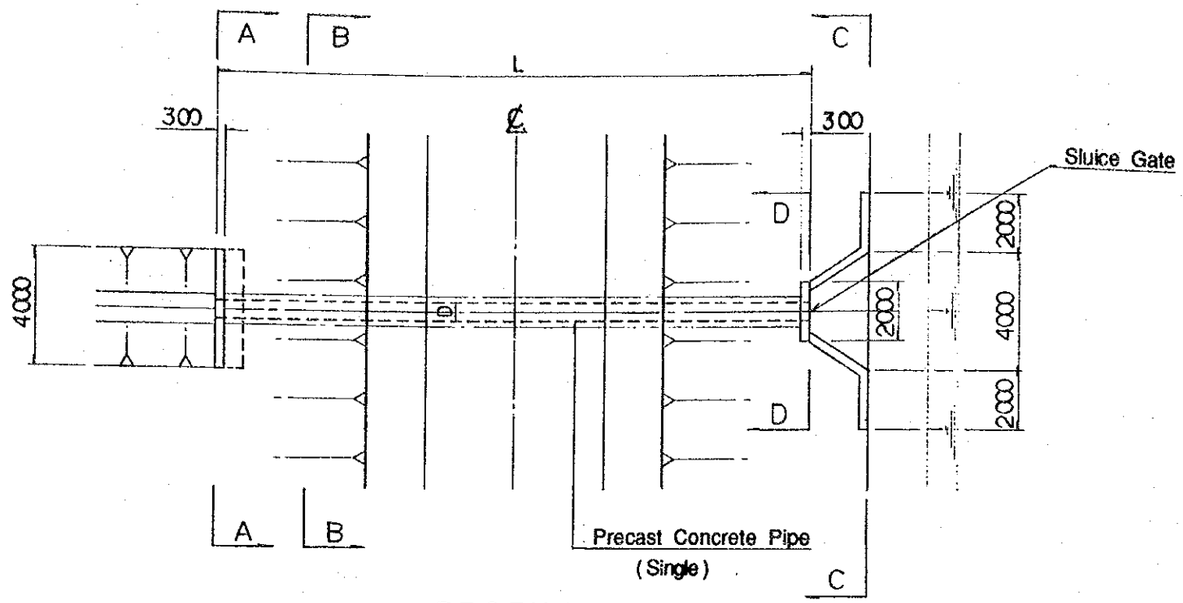

PROFILE

1:200

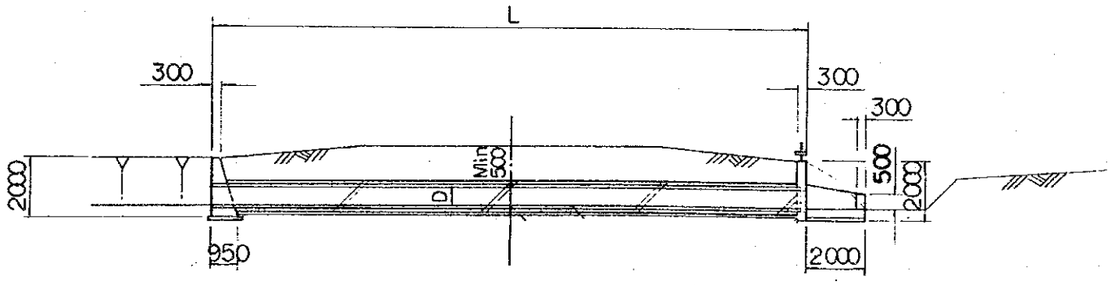

SECTION C - C

1:100

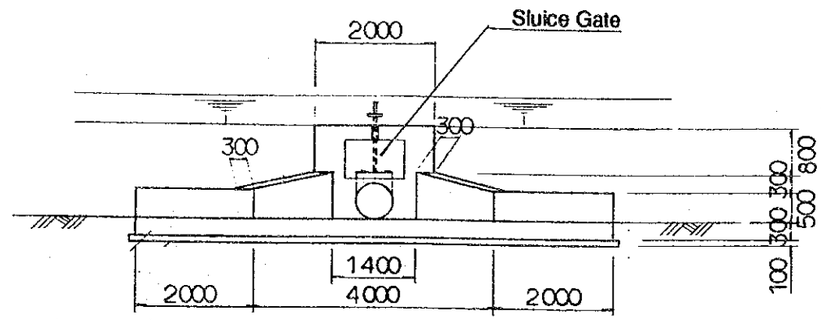

SECTION D - D

1:50

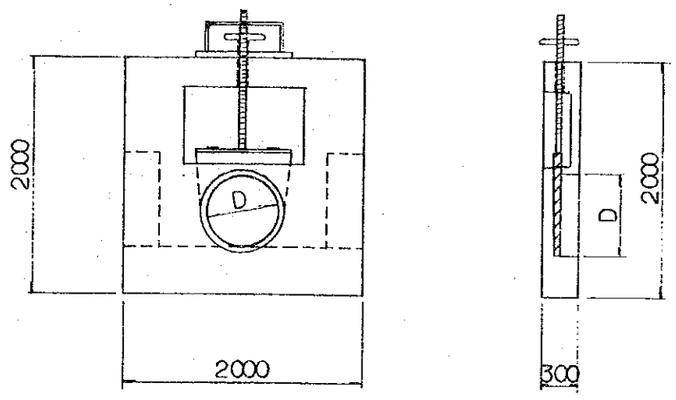

SECTION A - A

1:100

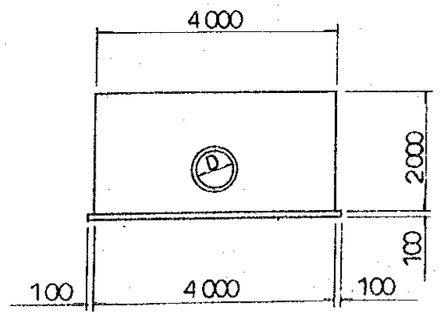

SECTION B - B

1:50

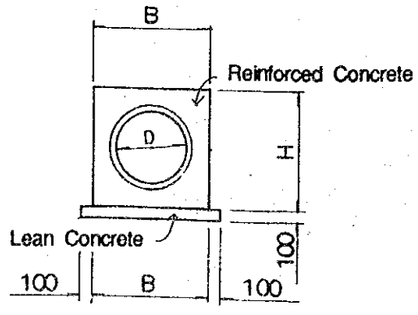

DEMOCRATIC SOCIALIST REPUBLIC OF SRI LANKA			
RURAL INFRASTRUCTURE IMPROVEMENT PROJECT IN WALAWE LEFT BANK AREA			
TITLE OF DRAWING 農 道 道路付帯工／管渠工 (2/3)			
DATE		DRAWING No.	
JAPAN INTERNATIONAL COOPERATION AGENCY			

SINGLE CULVERT

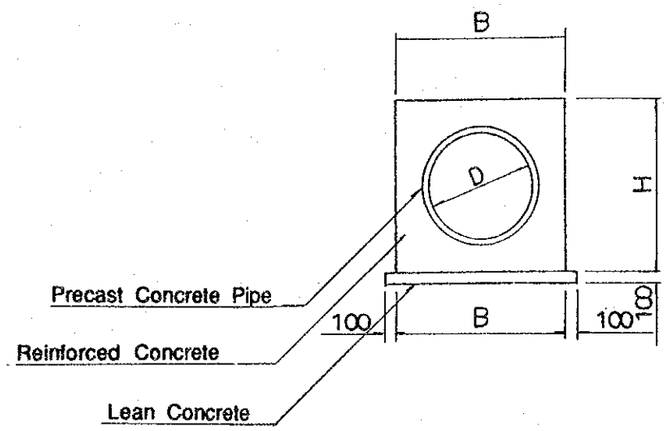

TWIN CULVERT

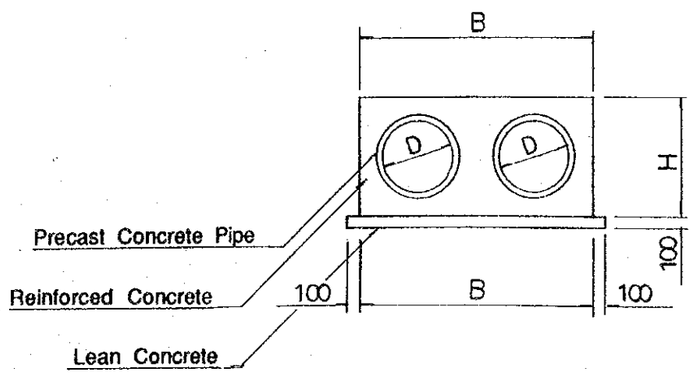

DIMENSION TABLE

TYPE	D	Single Double	Gate	B	H
TYPE-A	φ 500	Single	—	880	880
TYPE-B	φ 600	〃	—	1000	1000
TYPE-C	φ 700	〃	—	1220	1200
TYPE-D	φ 900	〃	—	1460	1460
TYPE-E	φ1000	〃	—	1560	1560
TYPE-F	φ1200	〃	—	1800	1800
TYPE-G	φ 500	Double	—	1760	880
TYPE-H	φ 600	〃	—	2000	1000
TYPE-I	φ 900	〃	—	2920	1460
TYPE-J	φ 300	Single	O	560	560
TYPE-K	φ 500	〃	O	880	880
TYPE-L	φ 600	〃	O	1000	1000
TYPE-M	φ 700	〃	O	1220	1220
TYPE-N	φ 800	〃	O	1340	1340
TYPE-O	φ 900	〃	O	1460	1460
TYPE-P	φ1100	〃	O	1800	1800

DEMOCRATIC SOCIALIST REPUBLIC OF SRI LANKA

RURAL INFRASTRUCTURE IMPROVEMENT PROJECT IN WALAWE LEFT BANK AREA

TITLE OF DRAWING

農 道
道路付帯工／管渠工 (3/3)

DATE | DRAWING No.

JAPAN INTERNATIONAL COOPERATION AGENCY

Plate No.	33

TWIN CULVERT

1:100

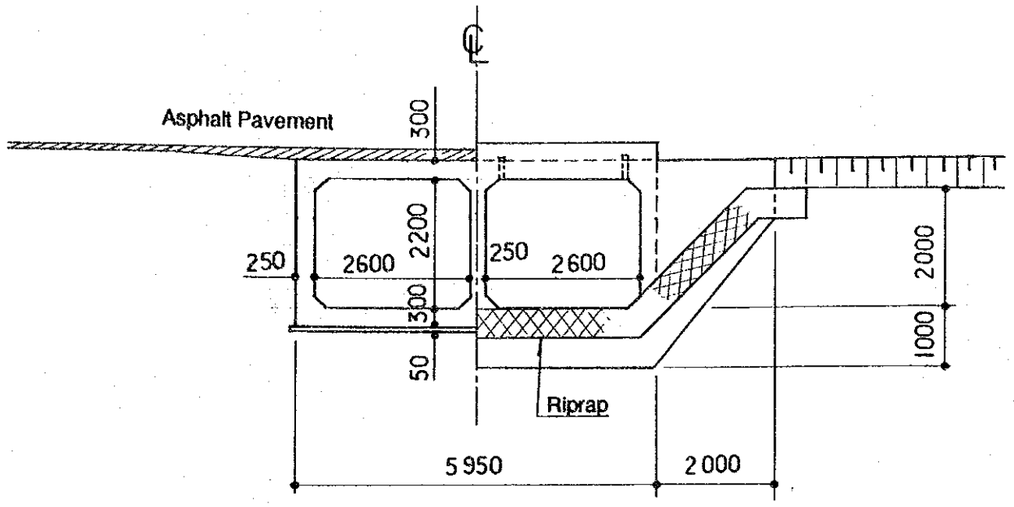

SINGLE CULVERT

1:100

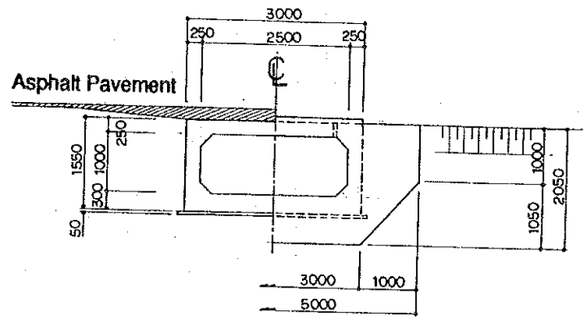

PROFILE

1:150

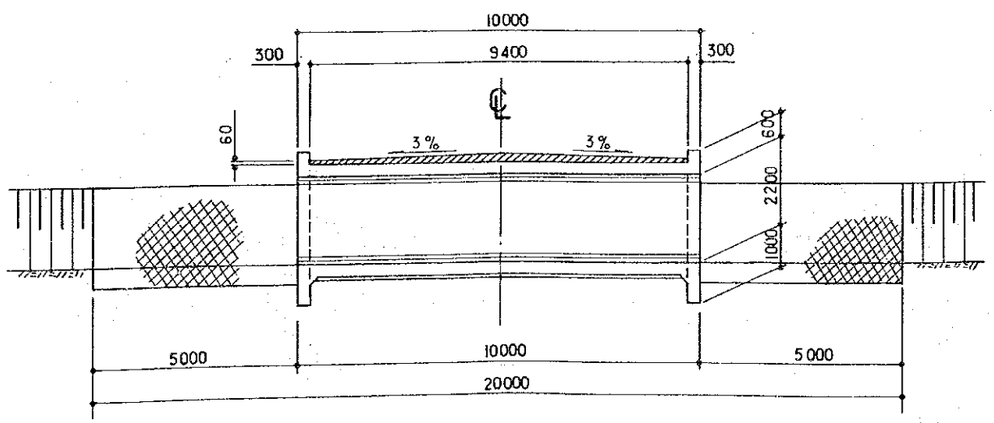

PROFILE

1:150

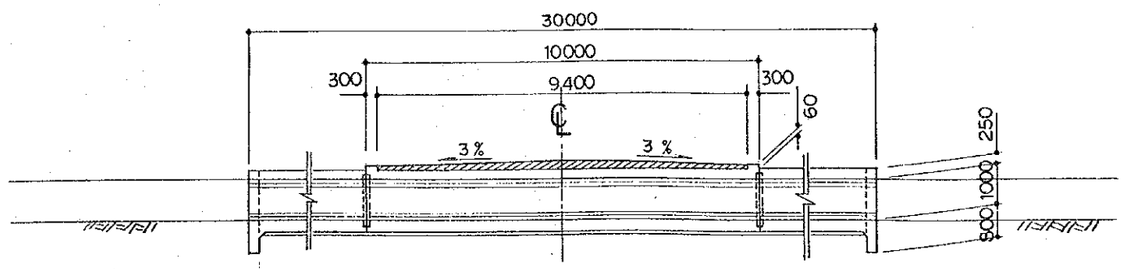

DEMOCRATIC SOCIALIST REPUBLIC OF SRI LANKA	
RURAL INFRASTRUCTURE IMPROVEMENT PROJECT IN WALAWE LEFT BANK AREA	
TITLE OF DRAWING 農 道 道路付帯工／暗渠工	
DATE	DRAWING No.
JAPAN INTERNATIONAL COOPERATION AGENCY	

PLAN

1:200

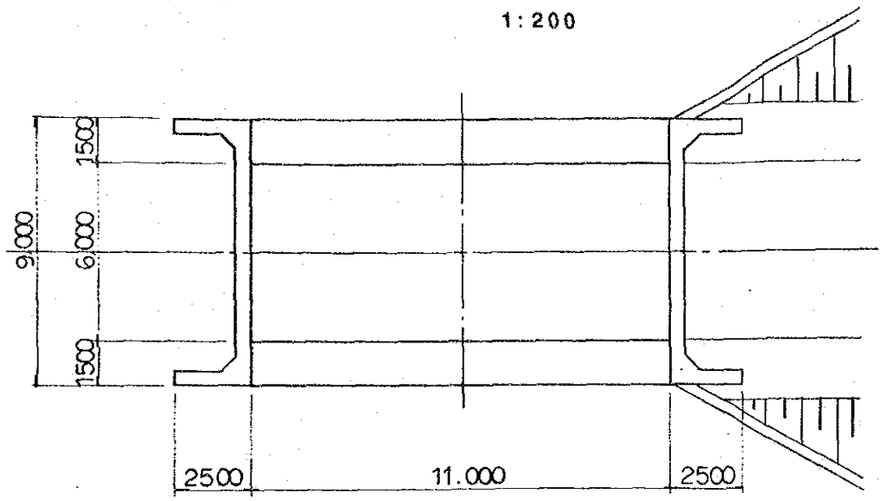

CROSS SECTION OF SUPER STRUCTURE

1 : 50

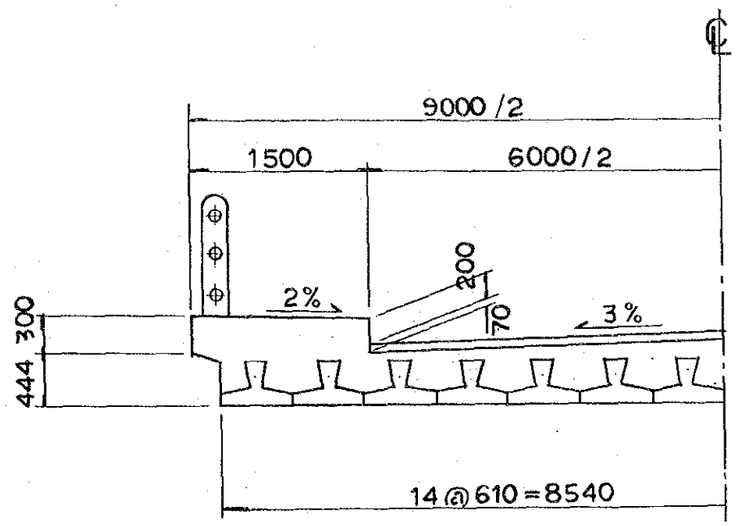

BEAM

1:30

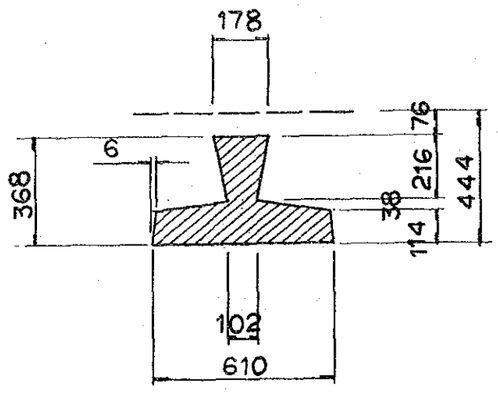

PROFILE

1:200

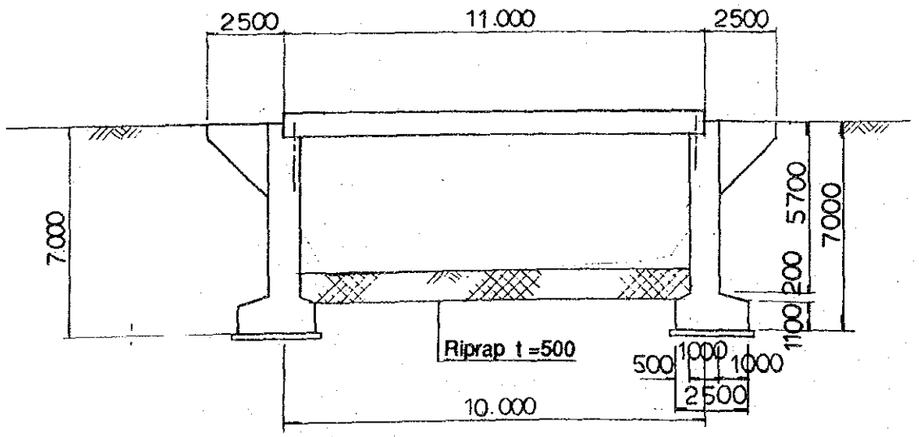

PLAN OF SIDE WALL

1:400

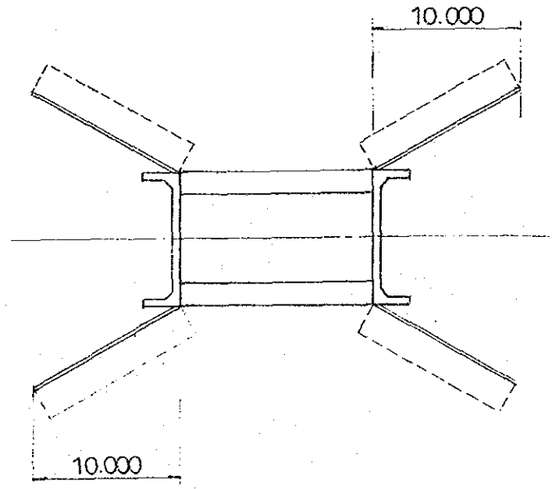

SIDE WALL

1:100

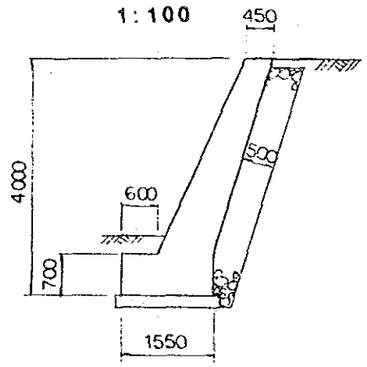

DEMOCRATIC SOCIALIST REPUBLIC OF SRI LANKA	
RURAL INFRASTRUCTURE IMPROVEMENT PROJECT IN WALAWE LEFT BANK AREA	
TITLE OF DRAWING 農 道 道路付帯工／橋梁工	
DATE	DRAWING No.
JAPAN INTERNATIONAL COOPERATION AGENCY	

Plate No.	35

PLAN

1 : 50

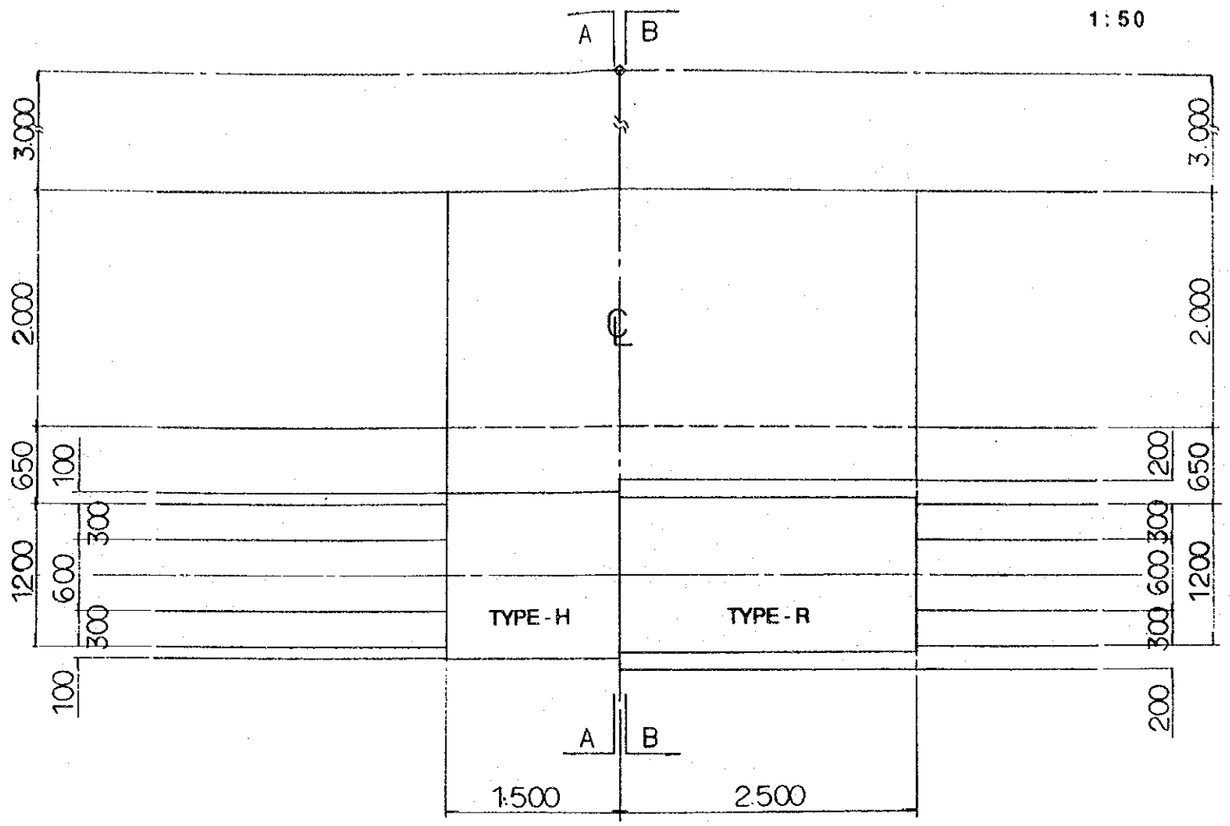

CROSS SECTION OF TYPE - R

1 : 50

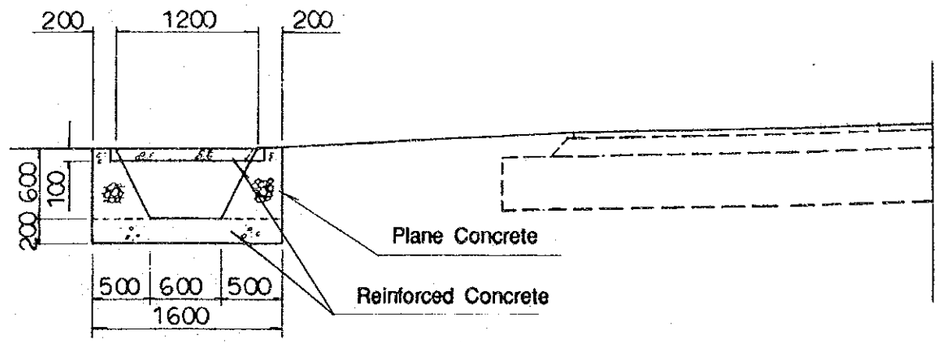

CROSS SECTION OF TYPE - H

1 : 50

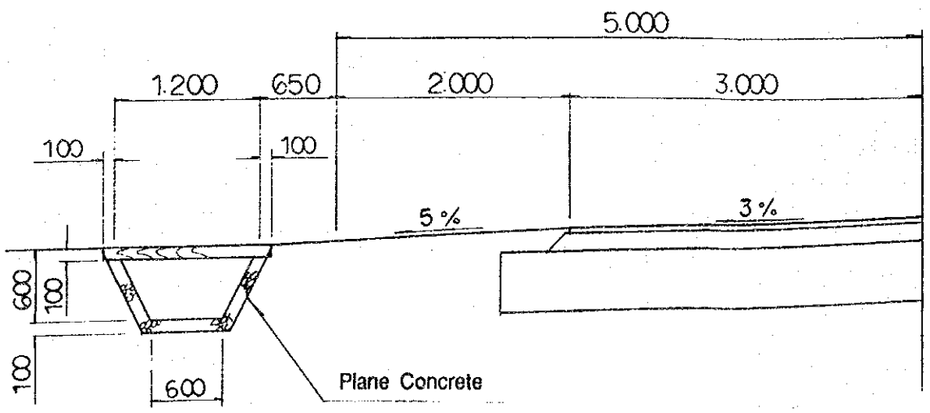

TYPE - H : Passage to House
TYPE - R : Passage to Village Road

DEMOCRATIC SOCIALIST REPUBLIC OF SRI LANKA	
RURAL INFRASTRUCTURE IMPROVEMENT PROJECT IN WALAWE LEFT BANK AREA	
TITLE OF DRAWING 農 道 道路付帯工／側溝及び進入路	
DATE	DRAWING No.
JAPAN INTERNATIONAL COOPERATION AGENCY	

Plate No.	36

Profile S = 1:250

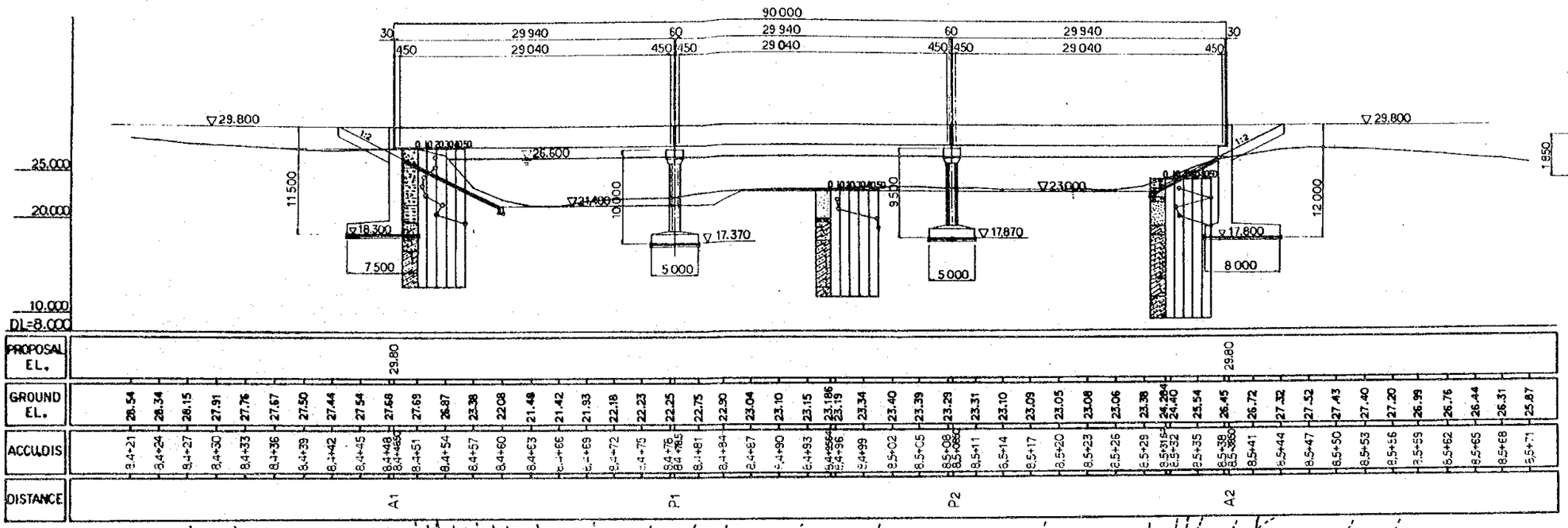

Cross Section
S = 1:100

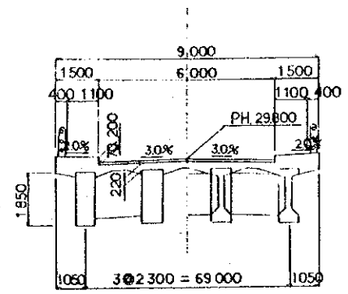

Plan S=1:250

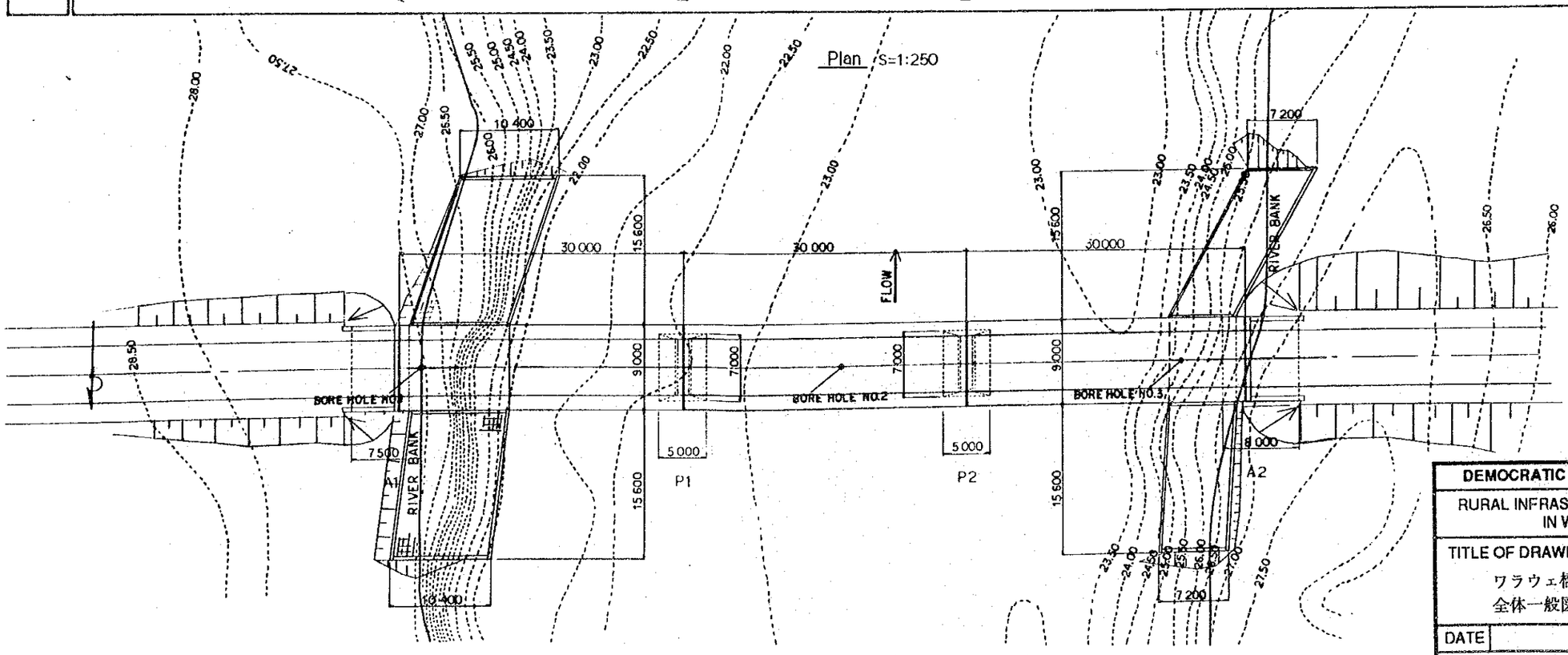

DEMOCRATIC SOCIALIST REPUBLIC OF SRI LANKA			
RURAL INFRASTRUCTURE IMPROVEMENT PROJECT IN WALAWE LEFT BANK AREA			
TITLE OF DRAWING ワラウェ橋梁 全体一般図			
DATE		DRAWING No.	
JAPAN INTERNATIONAL COOPERATION AGENCY			

Super Structure

ELEVATION

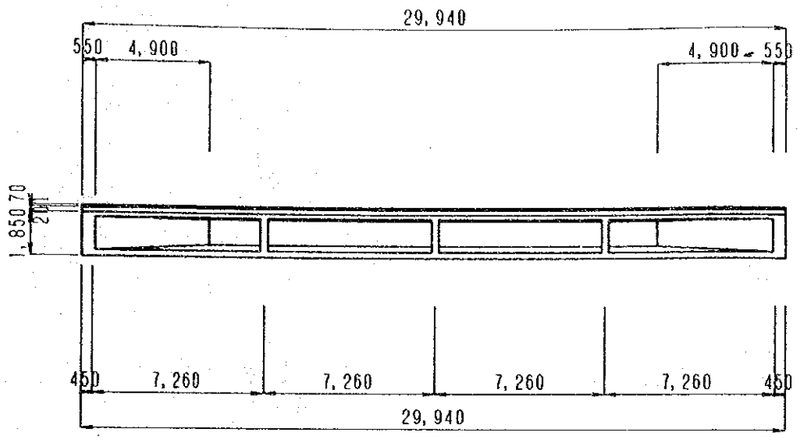

CROSS SECTION SCALE 1:100

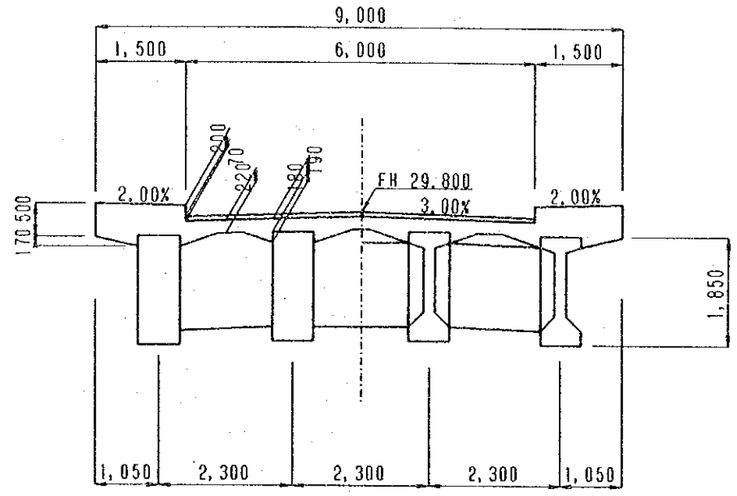

PLAN

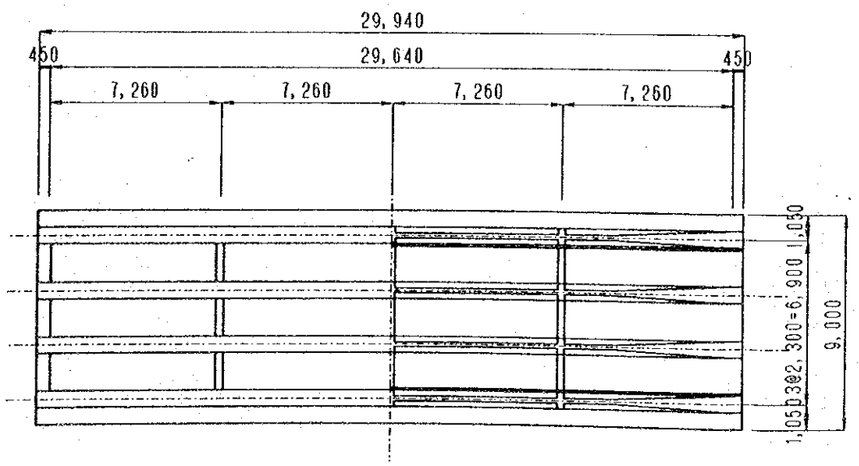

MAIN GIRDER SCALE 1:50

SUPPORT SECTION

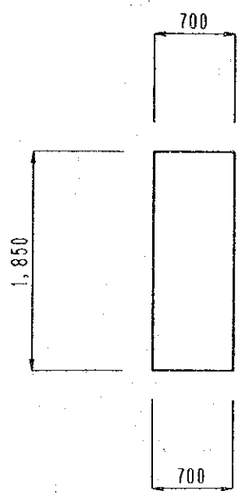

INTERMEDIATE SECTION

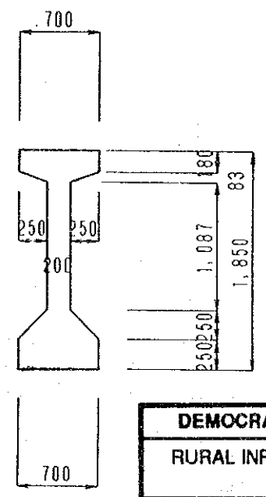

DEMOCRATIC SOCIALIST REPUBLIC OF SRI LANKA	
RURAL INFRASTRUCTURE IMPROVEMENT PROJECT IN WALAWE LEFT BANK AREA	
TITLE OF DRAWING ワラウェ橋梁 上部工構造図	
DATE	DRAWING No.
JAPAN INTERNATIONAL COOPERATION AGENCY	

Plate No.	38

A1 ABUTMENT SCALE 1:200

FRONT ELEVATION

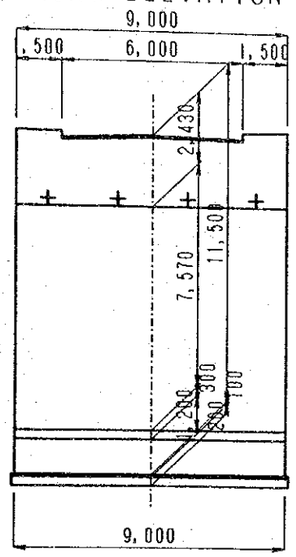

SIDE ELEVATION

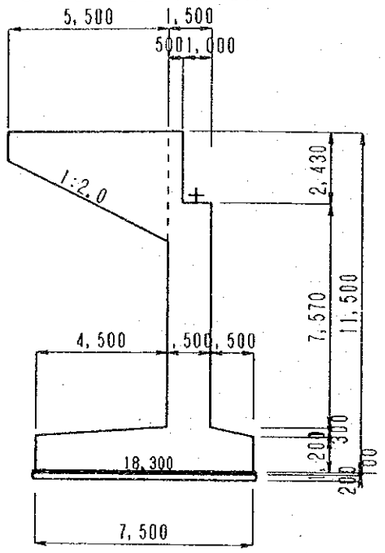

A2 ABUTMENT SCALE 1:200

FRONT ELEVATION

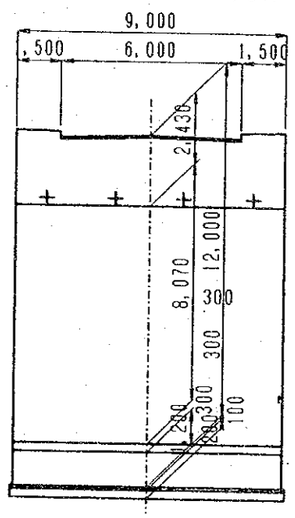

SIDE ELEVATION

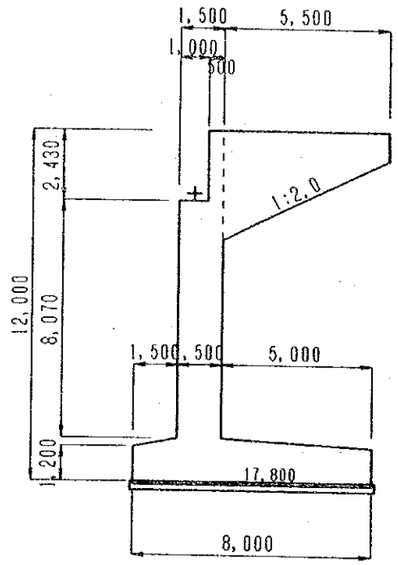

PLAN

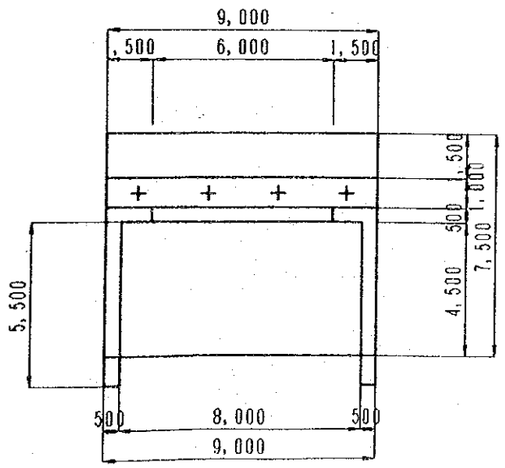

PLAN

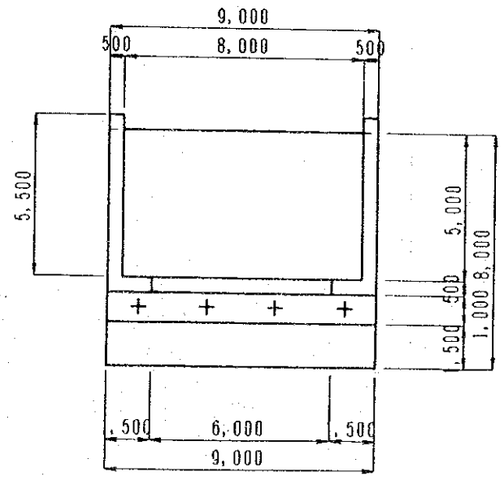

DEMOCRATIC SOCIALIST REPUBLIC OF SRI LANKA	
RURAL INFRASTRUCTURE IMPROVEMENT PROJECT IN WALAWE LEFT BANK AREA	
TITLE OF DRAWING ワラウェ橋梁 下部工構造図 (1/2)	
DATE	DRAWING No.
JAPAN INTERNATIONAL COOPERATION AGENCY	

P1 PIER SCALE 1:200

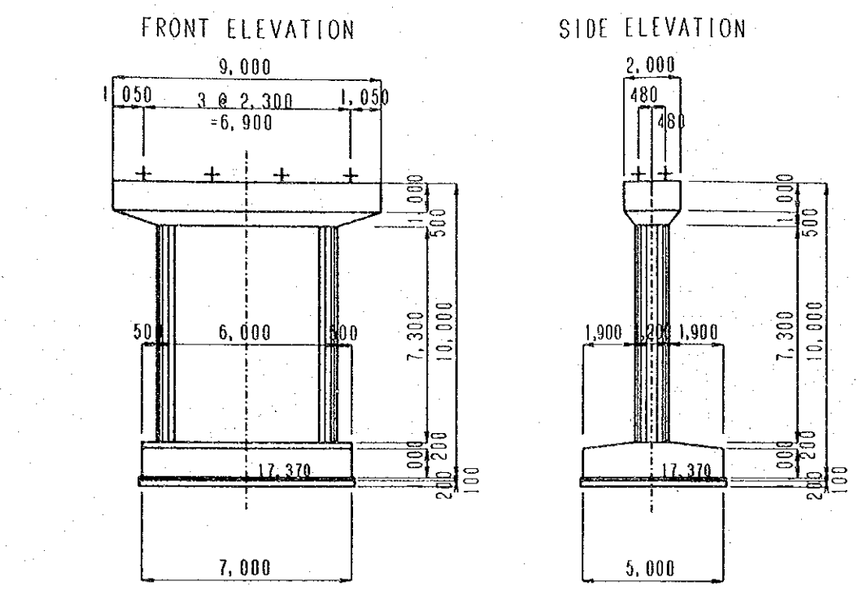

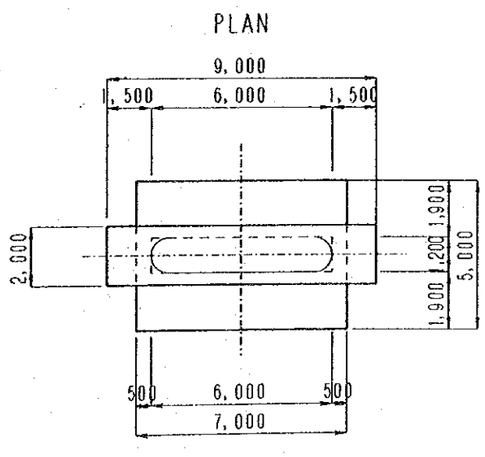

P2 PIER SCALE 1:200

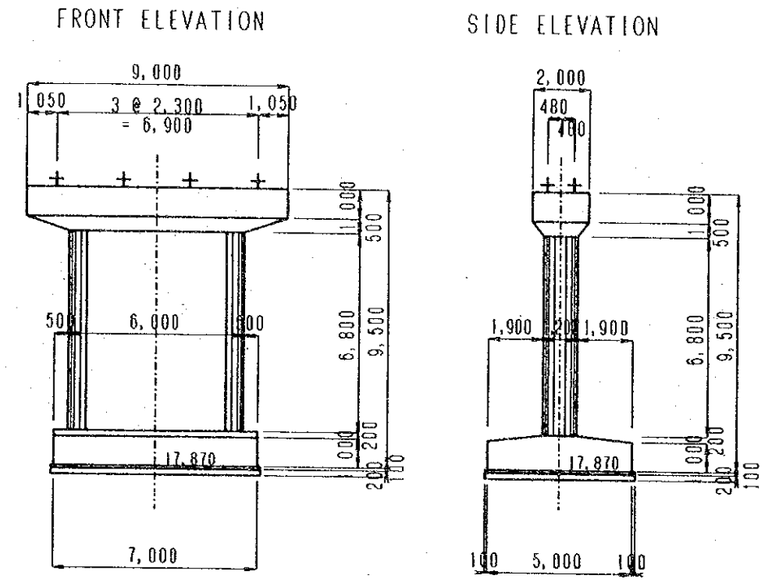

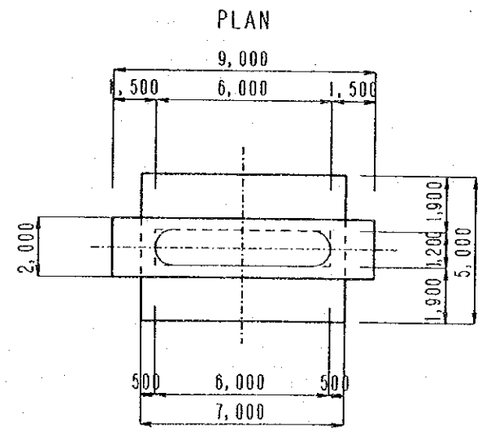

DEMOCRATIC SOCIALIST REPUBLIC OF SRI LANKA	
RURAL INFRASTRUCTURE IMPROVEMENT PROJECT IN WALAWE LEFT BANK AREA	
TITLE OF DRAWING ワラウェ橋梁 下部工構造図 (2/2)	
DATE	DRAWING No.
JAPAN INTERNATIONAL COOPERATION AGENCY	

FUTURE LAND USE PLAN

ITEM	DESCRIPTION	EXTENT IN hectares
1.0	CENTER FACILITIES	
1.1	DIVISIONAL SECRATERIAT COMPLEX	0.3
1.2	PRADESHIYA SABA OFFICE	0.3
1.3	GRAMA SEVAKA OFFICE	0.2
1.4	POLICE COMPLEX	3.9
1.5	POST OFFICE COMPLEX	0.4
1.6	BLOCK MANAGER'S OFFICE	0.5
1.7	DEVELOPMENT CENTRE (AGRICULTURE TRAINING CENTRE)	0.9
1.8	FUTURE OFFICES	1.8
2.0	EDUCATIONAL FACILITIES	
2.1	SENIOR SECONDARY SCHOOL COMPLEX	7.5
2.2	PRIMARY SCHOOL COMPLEX	
2.3	DAY CARE CENTRE	0.3
3.0	HEALTH FACILITIES	
3.1	DISTRICT HOSPITAL WITH DIVISIONAL HEALTH CENTRE COMPLEX	5.9
3.2	AYURVEDA DISPENSARY	0.2
4.0	COMMERCIAL FACILITIES	
4.1	BRANCH CO-OP COMPLEX	0.3
4.2	CO-OP RETAIL SHOPS	0.2
4.3	BANKS	0.6
4.4	PUBLIC MARKET & PARKING	0.6
4.5	POLA	1.0
4.6	FILLING STATION	0.7
4.7	SHOPS	10.1
4.8	C.W.E. RETAIL SHOP	0.1
4.9	FUTURE COMMERCIAL	1.5
5.0	RESIDENTIAL FACILITIES	
5.1	URBAN HOUSING AREA	52.1
5.2	STAFF HOUSING AREA	11.0
5.3	FUTURE HOUSING	50.1
6.0	SPORTS & RECREATIONAL FACILITES	
6.1	SPORTS COMPLEX	9.2
6.2	PLAYING FIELDS & OPEN AREAS	6.5
6.3	CHILDRENS PARK	1.3
6.4	CINEMA	0.5
7.0	INDUSTRIAL AND STORES FACILITES	
7.1	SMALL SCALE INDUSTRIES	3.0
7.2	LARGE SCALE INDUSTRIES	4.7
7.3	GARMENT FACTORIES	1.5
7.4	FUTURE GARMENT FACTORIES	2.7
7.5	PADDY STORES	0.2
8.0	OTHER FACILITIES	
8.1	BUS STAND COMPLEX	0.9
8.2	PARKING AREA	1.6
8.3	CIRCUIT BUNGALOW	1.2
8.4	BUDDHIST TEMPLES	2.6
8.5	CEMETERY	0.8
8.6	COMMUNITY CENTRE	0.3
8.7	FOREST, ROADS, TANKS, LANDSCAPING, RESERVATIONS etc.	103.7
	TOTAL	291.2

Japanese Grant Aid

- INTAKE, PURIFICATION AND PUMP FACILITY
- PIPE LINE FOR WATER SUPPLY
- WATER DISTRIBUTION TOWER
- DISTRIBUTION FACILITIES (STANDPIPE)

Future construction plan by Government of Sri Lanka

Distribution Pipe line

LEGEND

ROAD	ROAD
CANAL	
STREAM	
FOREST RESERVATION	
BRIDGE OR CULVERT	
TOWN SHIP BOUNDARY	
FIELD DRAINAGE	
CLOCK TOWER	C.T
WATER TANK	W.T

DEMOCRATIC SOCIALIST REPUBLIC OF SRI LANKA

RURAL INFRASTRUCTURE IMPROVEMENT PROJECT IN WALAWE LEFT BANK AREA

TITLE OF DRAWING

給水施設
給水計画概要図

DATE | DRAWING No.

JAPAN INTERNATIONAL COOPERATION AGENCY

Plate No. 41

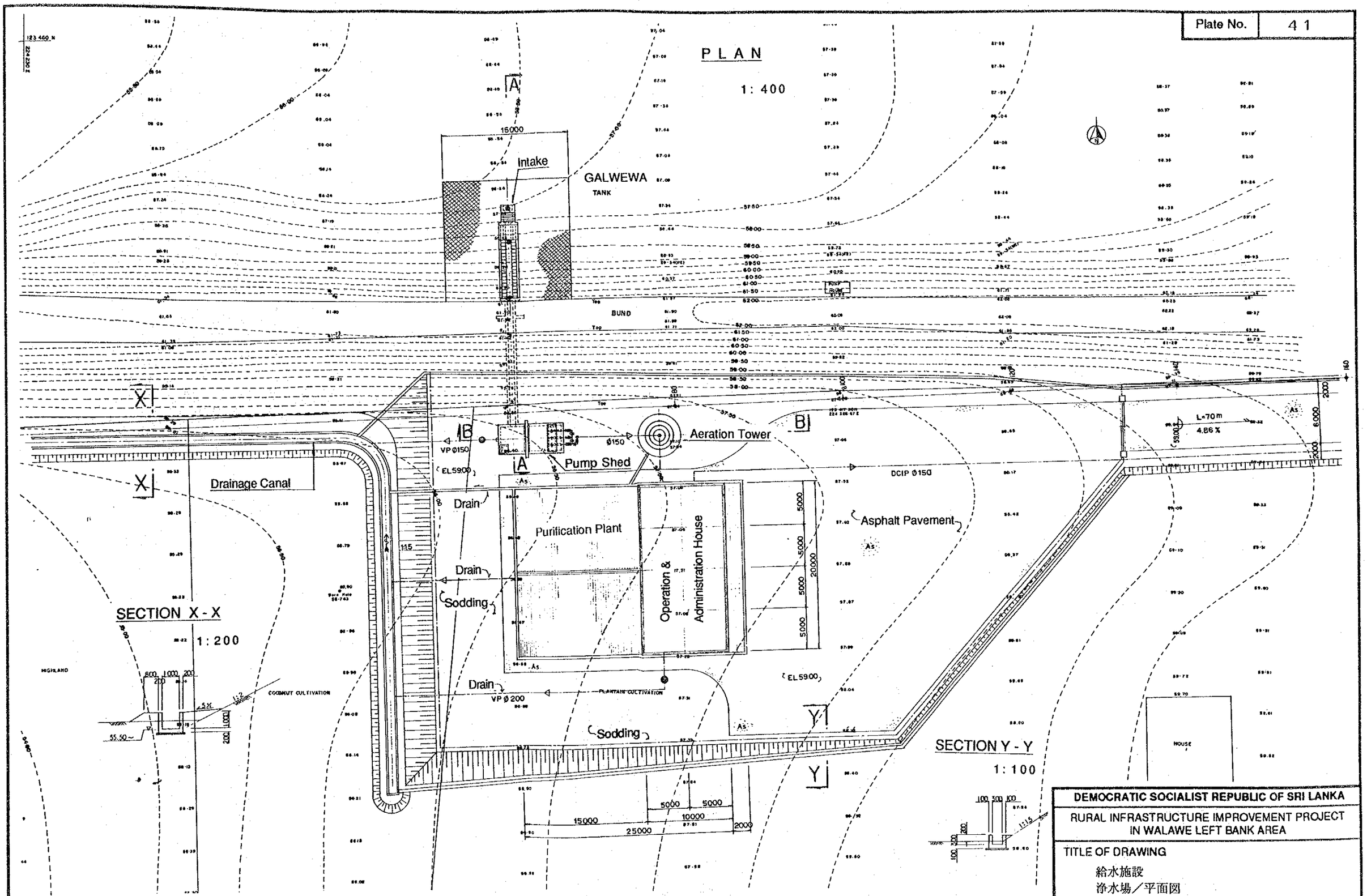

DEMOCRATIC SOCIALIST REPUBLIC OF SRI LANKA

RURAL INFRASTRUCTURE IMPROVEMENT PROJECT IN WALAWE LEFT BANK AREA

TITLE OF DRAWING

給水施設
浄水場／平面図

DATE | DRAWING No.

JAPAN INTERNATIONAL COOPERATION AGENCY

Plate No. 42

SECTION A - A
1:100

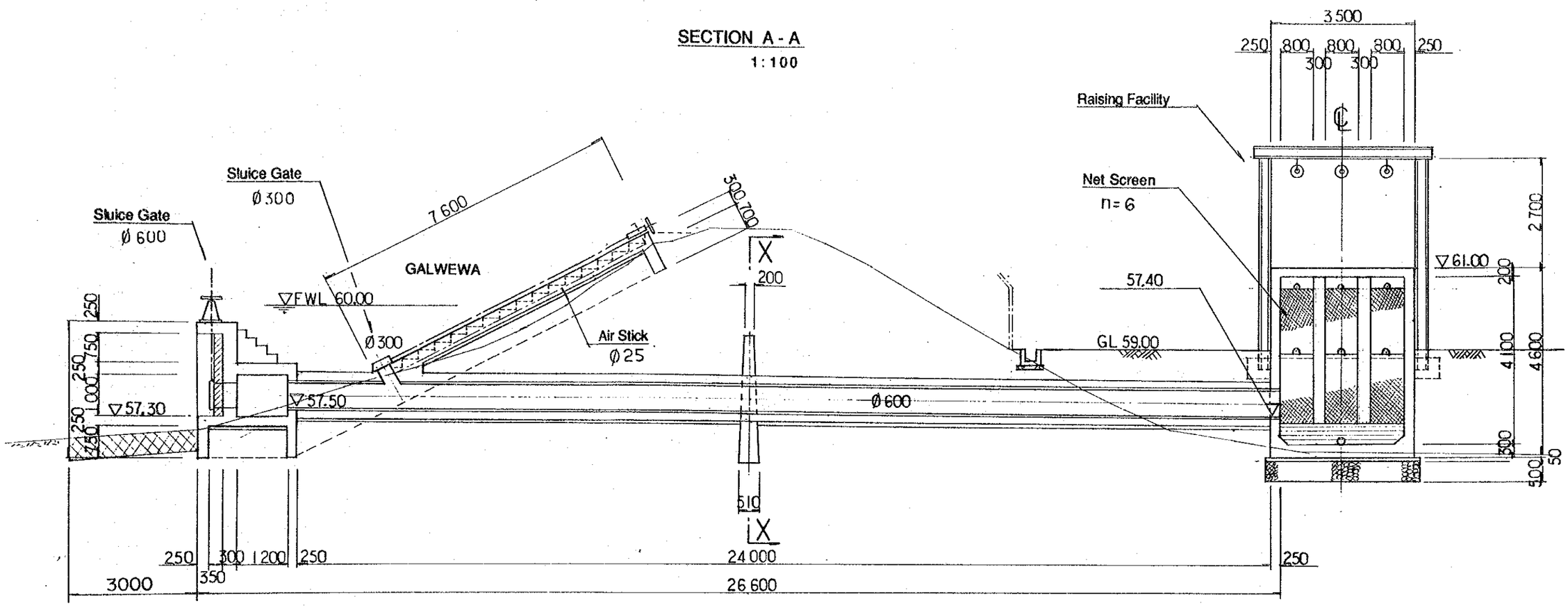

PLAN OF INTAKE
1:100

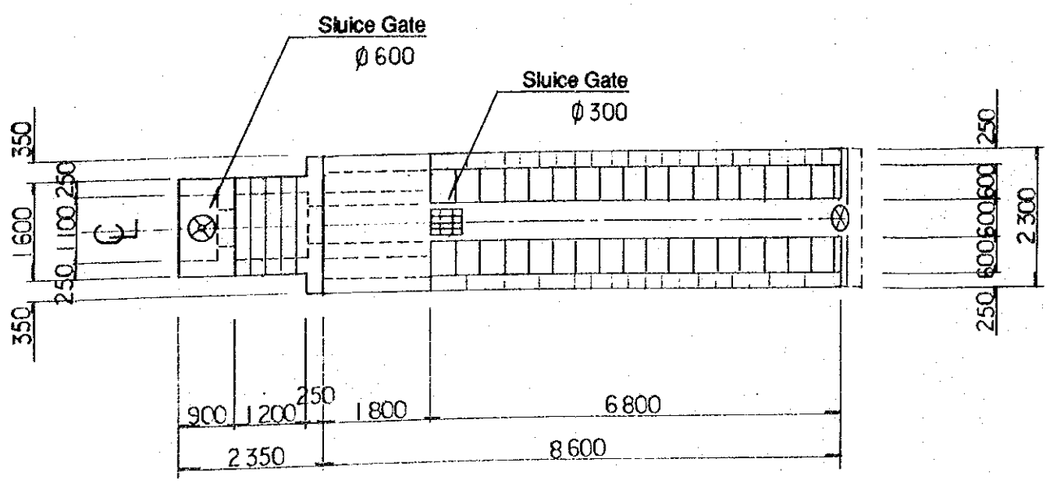

SECTION X - X
1:50

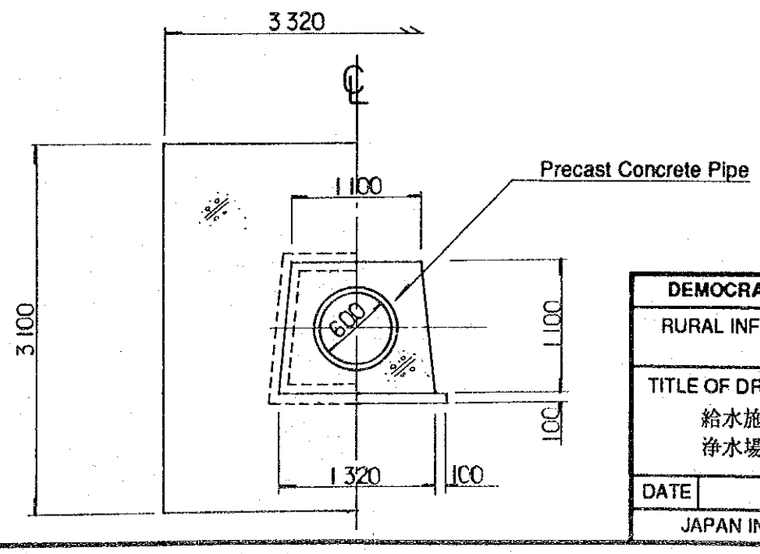

DEMOCRATIC SOCIALIST REPUBLIC OF SRI LANKA	
RURAL INFRASTRUCTURE IMPROVEMENT PROJECT IN WALAWE LEFT BANK AREA	
TITLE OF DRAWING 給水施設 浄水場／取水工構造図	
DATE	DRAWING No.
JAPAN INTERNATIONAL COOPERATION AGENCY	

Plate No.	43

SECTION B - B

1 : 100

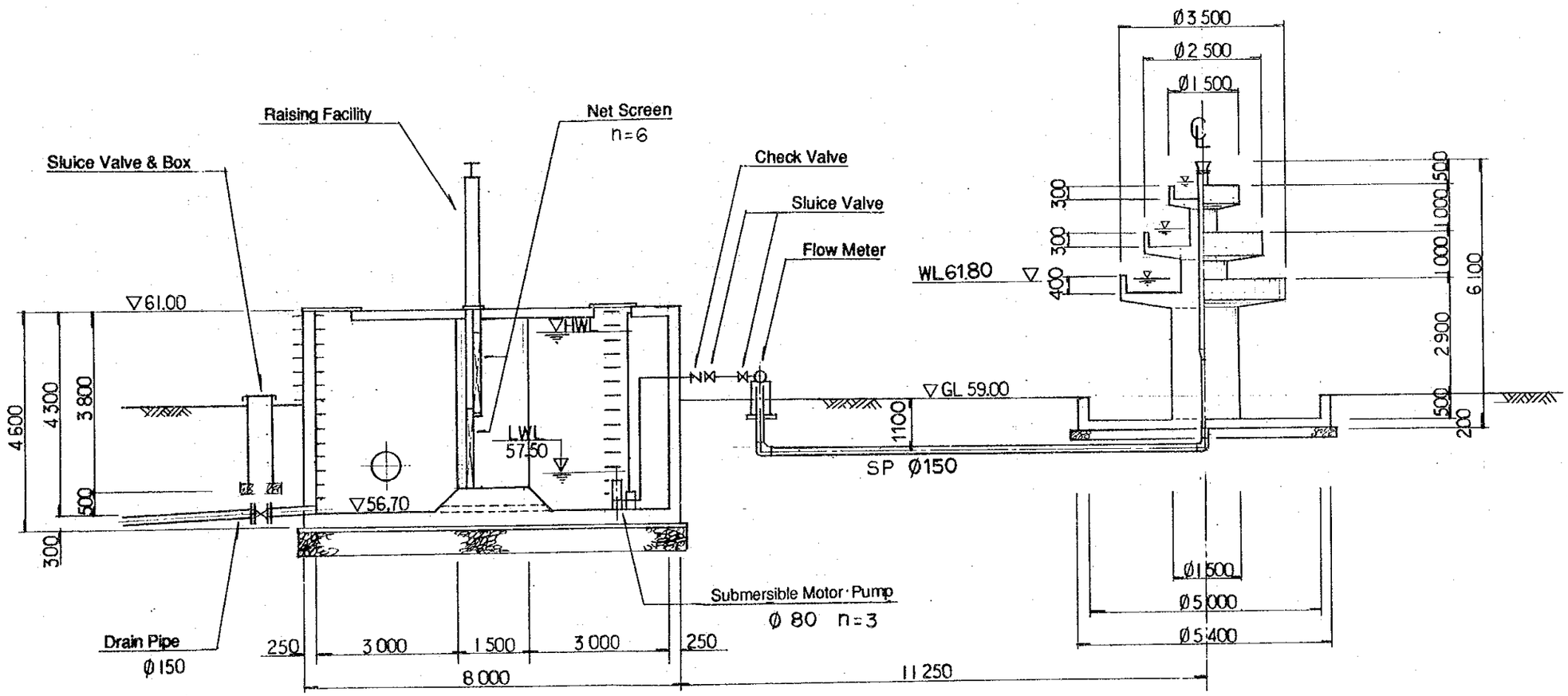

DEMOCRATIC SOCIALIST REPUBLIC OF SRI LANKA			
RURAL INFRASTRUCTURE IMPROVEMENT PROJECT IN WALAWE LEFT BANK AREA			
TITLE OF DRAWING 給水施設 浄水場／着水井及びｴｱﾚｰｼｮﾝﾀﾜｰ			
DATE		DRAWING No.	
JAPAN INTERNATIONAL COOPERATION AGENCY			

Plate No.	44

LAYOUT PLAN OF CLARIFICATION PLANT

1 : 100

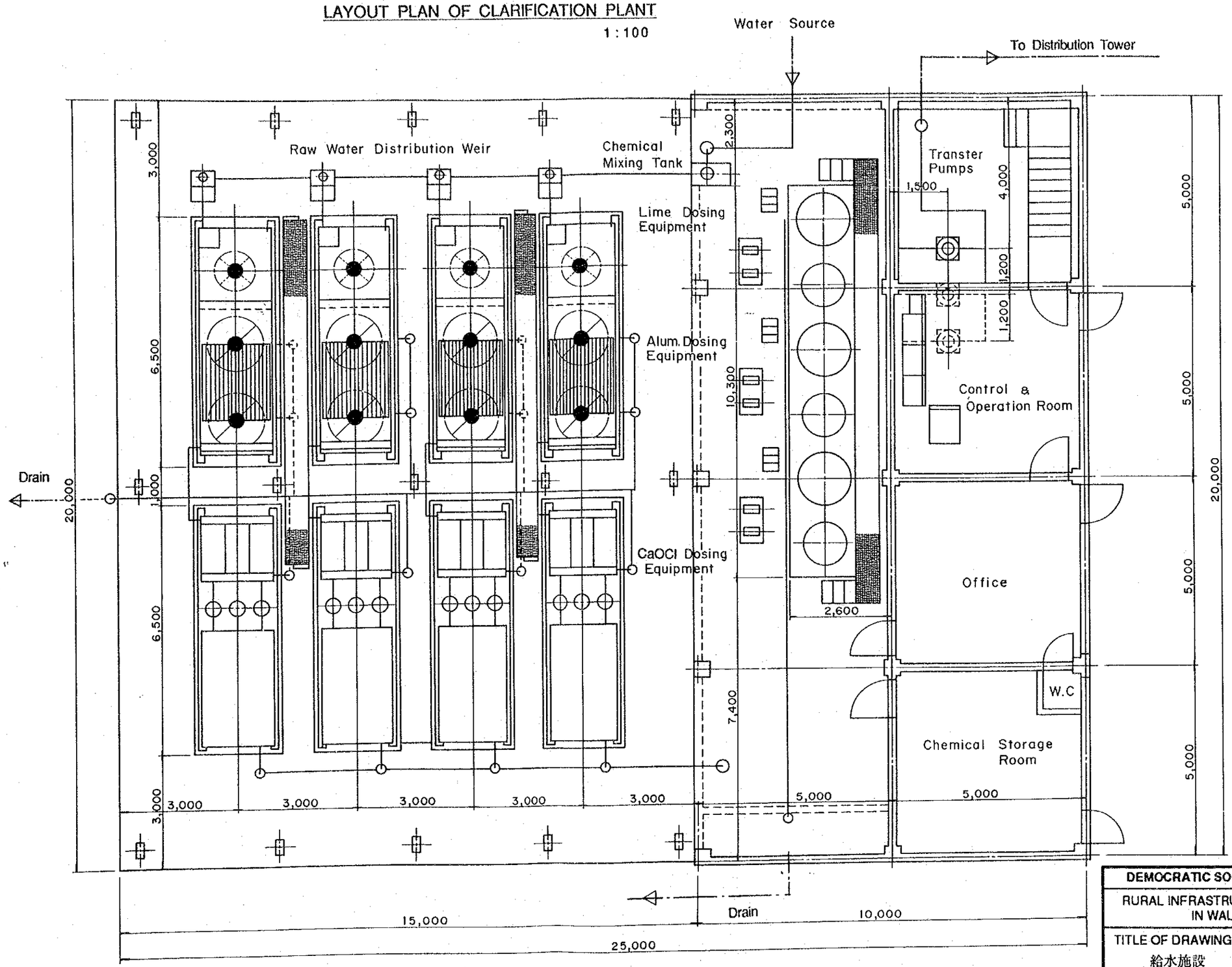

DEMOCRATIC SOCIALIST REPUBLIC OF SRI LANKA			
RURAL INFRASTRUCTURE IMPROVEMENT PROJECT IN WALAWE LEFT BANK AREA			
TITLE OF DRAWING 給水施設 浄水場／水処理施設、管理棟 (1/2)			
DATE		DRAWING No.	
JAPAN INTERNATIONAL COOPERATION AGENCY			

Plate No.	45

PROFILE

1:100

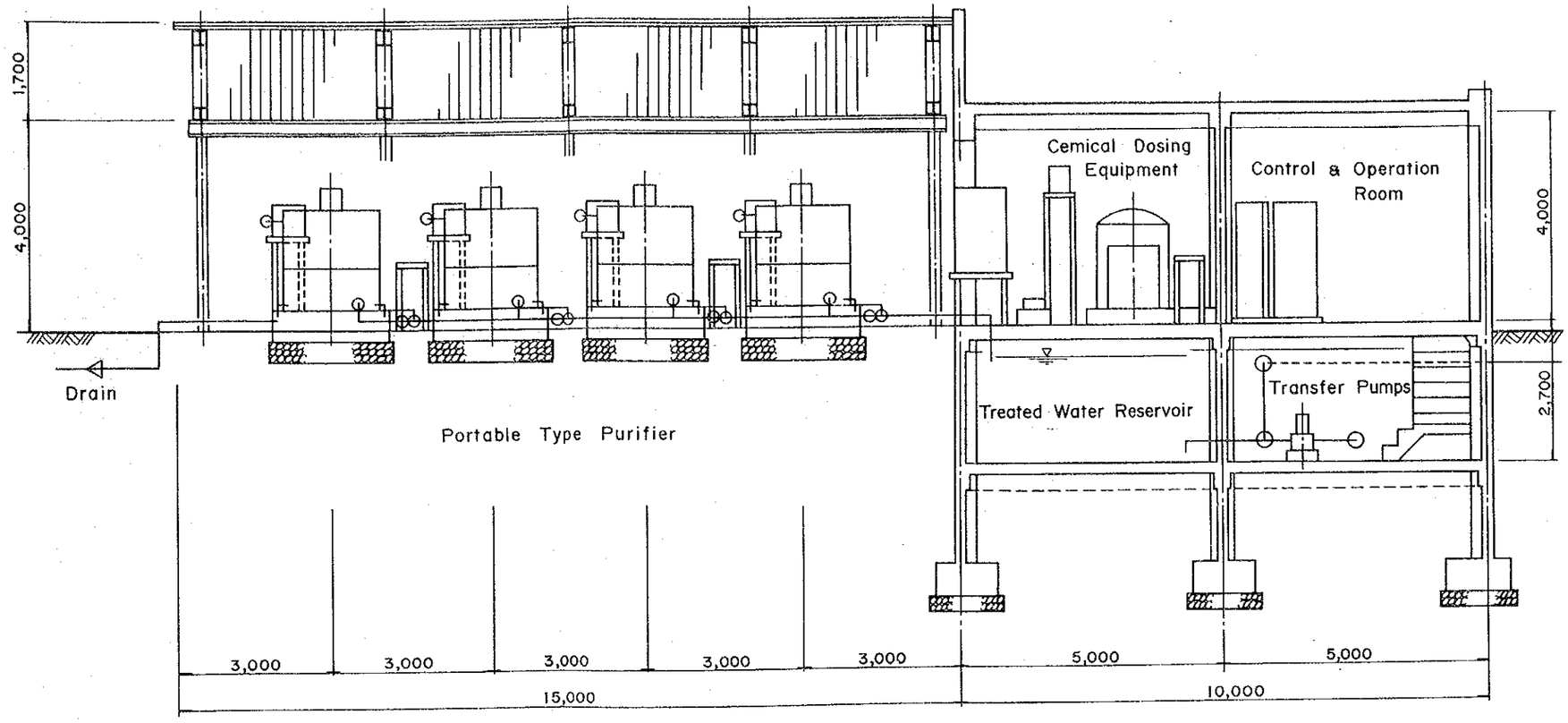

DEMOCRATIC SOCIALIST REPUBLIC OF SRI LANKA			
RURAL INFRASTRUCTURE IMPROVEMENT PROJECT IN WALAWE LEFT BANK AREA			
TITLE OF DRAWING 給水施設 浄水場／水処理施設, 管理棟 (2/2)			
DATE		DRAWING No.	
JAPAN INTERNATIONAL COOPERATION AGENCY			

Plate No.	46

EAST(FRONT) SIDE VIEW

1:100

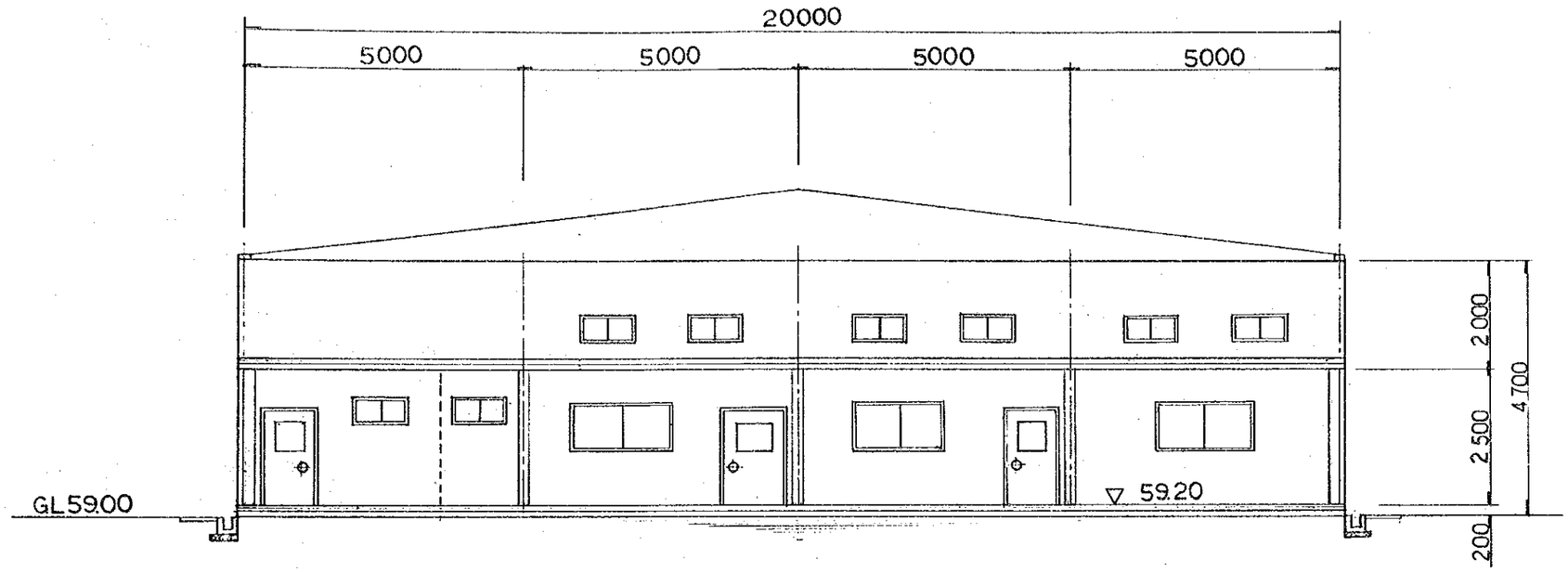

WEST SIDE VIEW

1:100

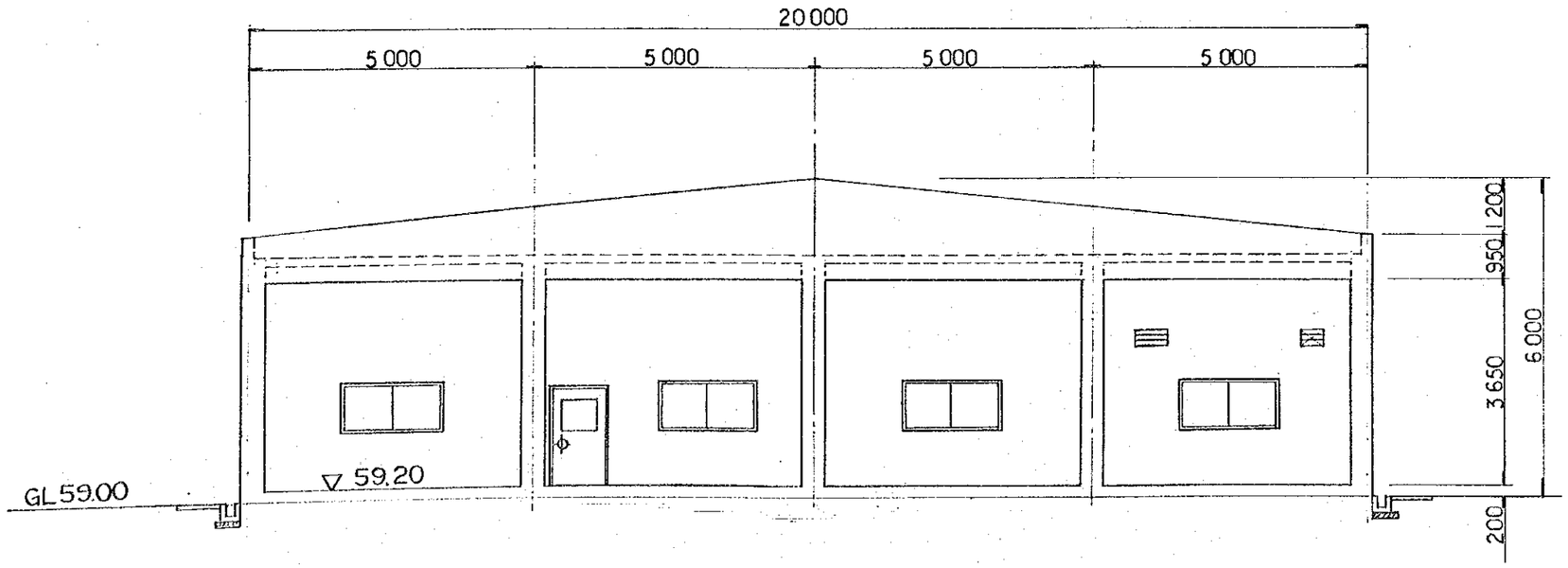

DEMOCRATIC SOCIALIST REPUBLIC OF SRI LANKA			
RURAL INFRASTRUCTURE IMPROVEMENT PROJECT IN WALAWE LEFT BANK AREA			
TITLE OF DRAWING 給水施設 浄水場／管理棟 (1/2)			
DATE		DRAWING No.	
JAPAN INTERNATIONAL COOPERATION AGENCY			

Plate No.	47

CROSS SECTION OF HOUSE
1:100

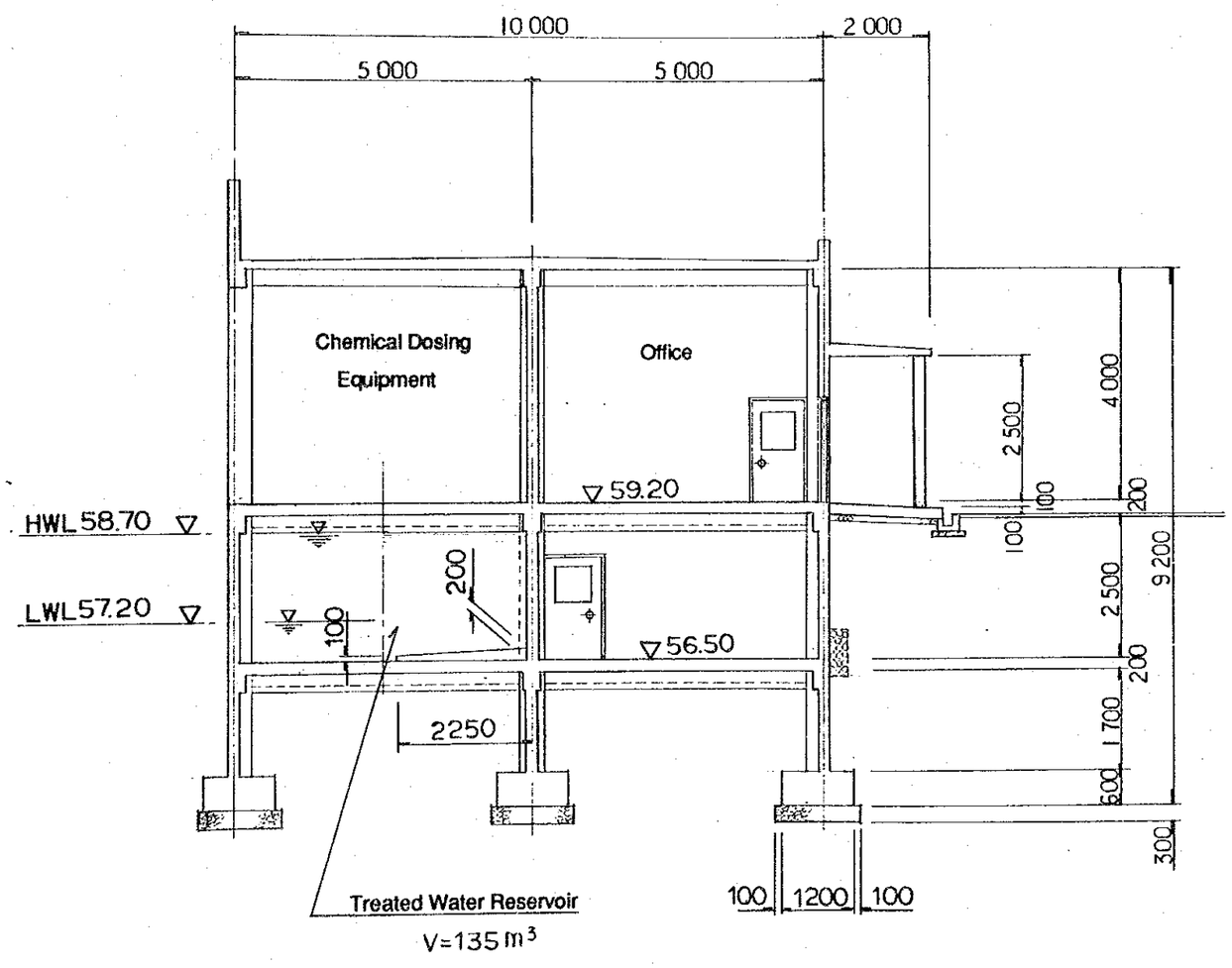

NORTH SIDE VIEW
1:100

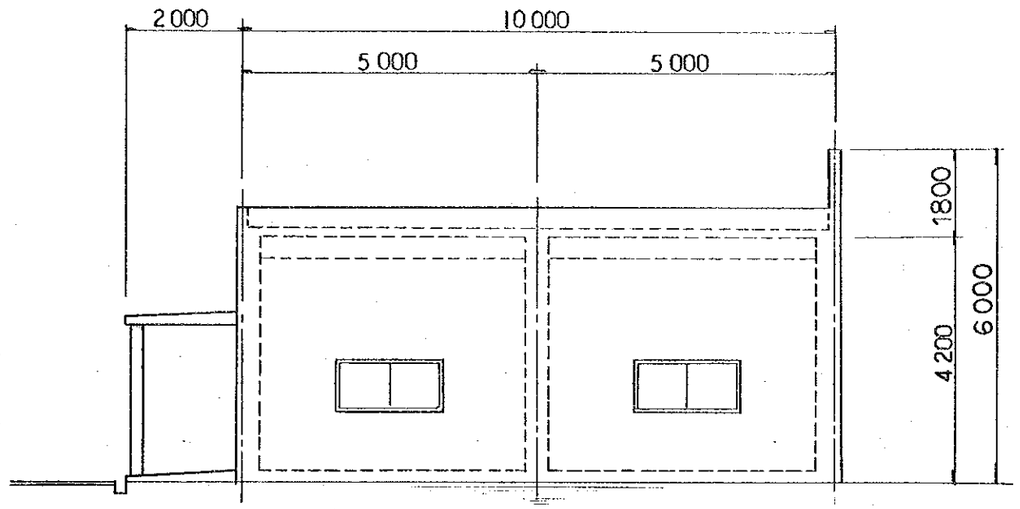

SOUTH SIDE VIEW
1:100

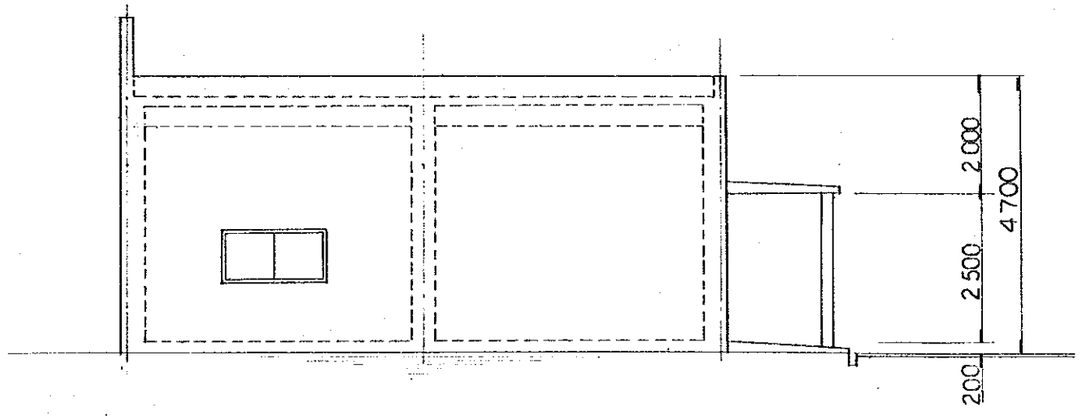

DEMOCRATIC SOCIALIST REPUBLIC OF SRI LANKA			
RURAL INFRASTRUCTURE IMPROVEMENT PROJECT IN WALAWE LEFT BANK AREA			
TITLE OF DRAWING 給水施設 浄水場／管理棟 (2/2)			
DATE		DRAWING No.	
JAPAN INTERNATIONAL COOPERATION AGENCY			

Plate No.	48

CROSS SECTION

1:100

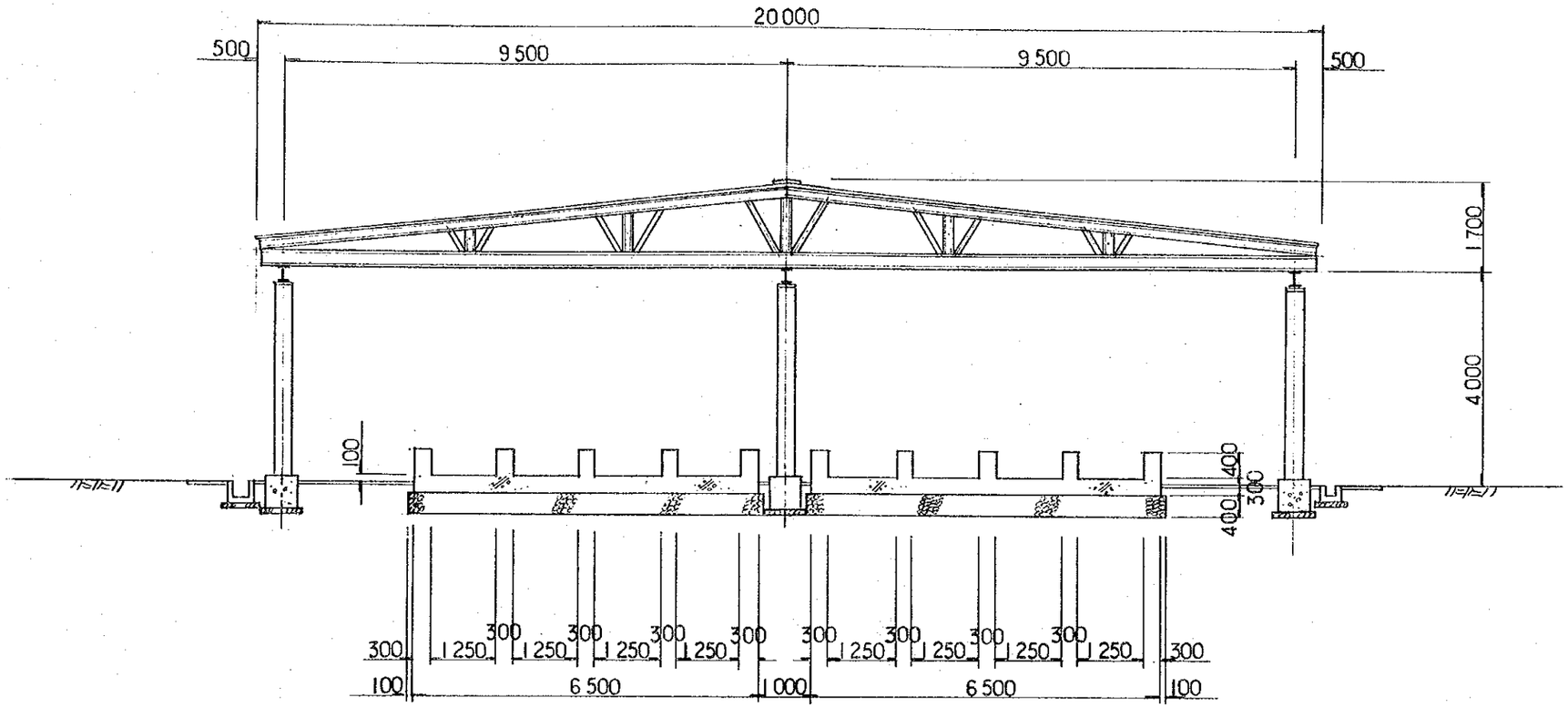

DEMOCRATIC SOCIALIST REPUBLIC OF SRI LANKA	
RURAL INFRASTRUCTURE IMPROVEMENT PROJECT IN WALAWE LEFT BANK AREA	
TITLE OF DRAWING 給水施設 浄水場／水処理設備基礎、天蓋工	
DATE	DRAWING No.
JAPAN INTERNATIONAL COOPERATION AGENCY	

Plate No. 49

PLAN

1:4000

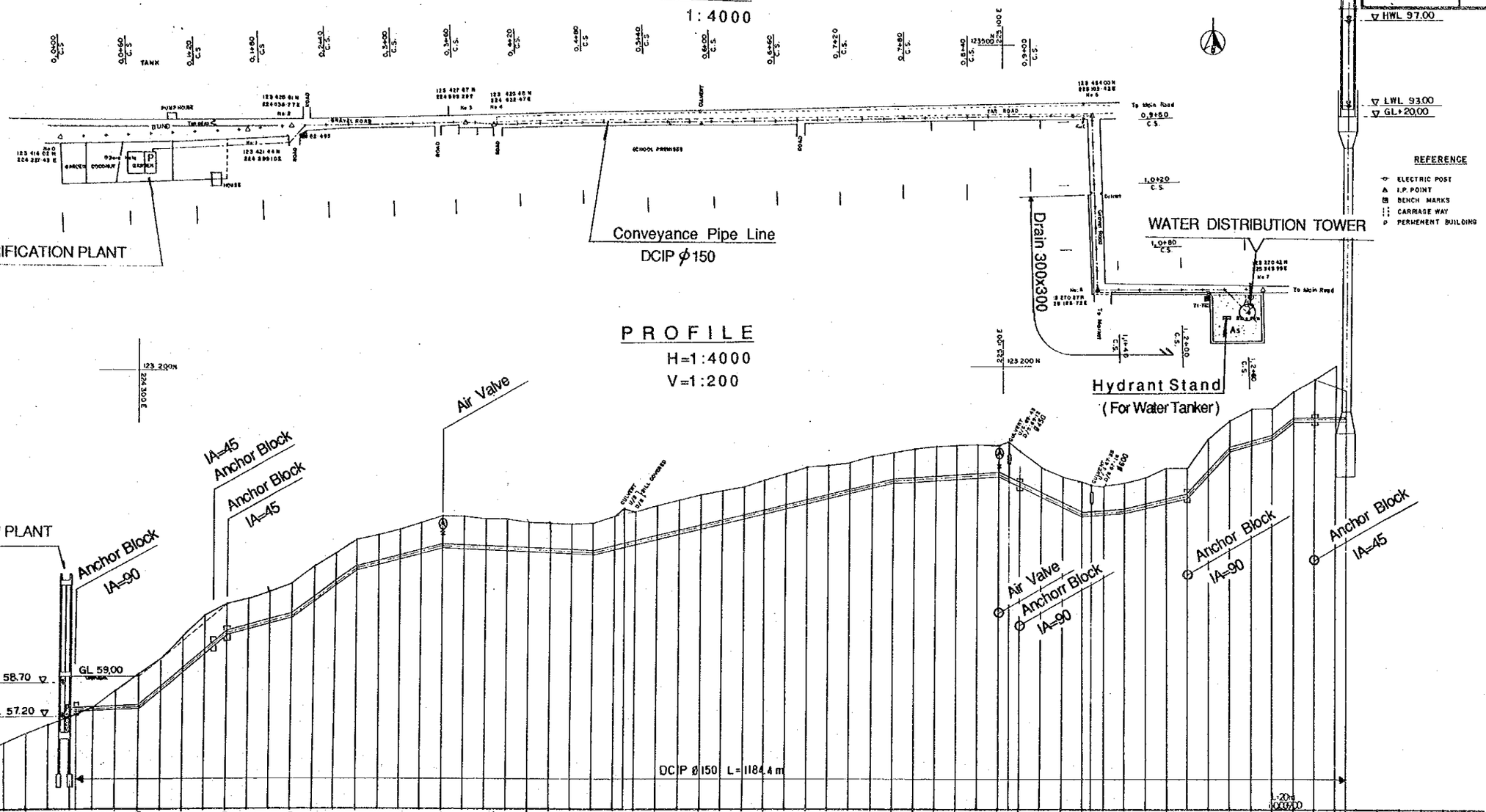

PROFILE

H=1:4000
V=1:200

DATUM 83.0m

PIPE LINE GRADIENT	L=54.4m i=0.00184; L=80m i=0.04388; L=60m i=0.01383; L=60m i=0.03517; L=80m i=0.01275; L=140m i=0.00200; L=280m i=0.01221; L=100m i=0.00340; L=40m i=0.00900; L=40m i=0.00200; L=40m i=0.00625; L=60m i=0.01200; L=40m i=0.00625; L=40m i=0.01400; L=50m i=0.0100; L=20m i=0.00400
PIPE CENTER ELEVATION	57.60, 57.64, 57.64, 57.70, 58.57, 59.44, 60.30, 61.17, 61.45, 61.72, 62.00, 62.70, 63.41, 64.11, 64.37, 64.62, 64.88, 65.13, 65.09, 65.05, 65.01, 64.97, 64.93, 64.89, 64.85, 65.09, 65.22, 65.34, 65.58, 65.83, 66.07, 66.32, 66.56, 66.80, 67.05, 67.29, 67.54, 67.78, 68.02, 68.27, 68.34, 68.41, 68.47, 68.54, 68.61, 68.32, 68.09, 67.87, 67.57, 67.11, 66.65, 66.70, 66.76, 66.86, 67.10, 67.34, 67.58, 68.70, 69.81, 70.09, 70.37, 71.15, 71.17, 71.19, 71.20
EXCAVATION DEPTH	1.98, 1.54, 1.54, 1.69, 1.52, 1.66, 1.86, 1.48, 1.43, 1.48, 1.66, 1.70, 1.64, 1.48, 1.50, 1.48, 1.50, 1.59, 1.61, 1.52, 1.55, 1.50, 1.47, 1.48, 1.55, 1.66, 1.88, 1.61, 1.65, 1.68, 1.70, 1.64, 1.58, 1.65, 1.66, 1.71, 1.71, 1.52, 1.56, 1.48, 1.56, 1.63, 1.60, 1.56, 1.48, 1.98, 1.71, 1.48, 1.51, 1.73, 1.56, 1.46, 1.48, 1.52, 1.72, 1.48, 1.72, 1.48, 1.76, 1.48, 1.48, 2.02, 2.63, 1.48
GROUND LEVELS	59.55, 56.01, 56.41, 56.87, 57.24, 59.00, 57.73, 59.00, 58.48, 59.00, 59.21, 59.91, 60.92, 61.98, 62.47, 62.70, 63.02, 63.48, 64.22, 64.87, 65.41, 65.69, 65.92, 66.20, 66.54, 66.52, 66.39, 66.38, 66.29, 66.22, 66.19, 66.22, 66.57, 66.92, 66.77, 67.05, 67.33, 67.59, 67.78, 67.96, 68.27, 68.33, 68.62, 68.87, 69.07, 69.12, 69.40, 69.57, 69.72, 69.86, 69.89, 69.92, 69.91, 70.12, 69.62, 69.87, 69.44, 68.20, 68.08, 68.04, 68.16, 68.44, 68.88, 68.88, 70.24, 71.11, 71.67, 71.67, 72.15, 73.01, 73.64, 72.50
DISTANCE	0.0+00, 0.0+20, 0.0+40, 0.0+60, 0.0+80, +85.60, 0.1+00, 0.1+20, 0.1+40, 0.1+60, 0.1+80, 0.2+00, 0.2+20, 0.2+40, 0.2+60, 0.2+80, 0.3+00, 0.3+20, 0.3+40, 0.3+60, 0.3+80, 0.4+00, 0.4+20, 0.4+40, 0.4+60, 0.4+80, 0.5+00, 0.5+20, 0.5+40, 0.5+60, 0.5+80, 0.6+00, 0.6+20, 0.6+40, 0.6+60, 0.6+80, 0.7+00, 0.7+20, 0.7+40, 0.7+60, 0.7+80, 0.8+00, 0.8+20, 0.8+40, 0.8+60, 0.8+80, 0.9+00, 0.9+20, 0.9+40, 0.9+60, 0.9+80, 1.0+00, 1.0+20, 1.0+27, 1.0+40, 1.0+60, 1.0+80, 1.1+00, 1.1+20, 1.1+40, 1.1+60, 1.1+80, 1.2+00, 1.2+20, 1.2+40, 1.2+60, 1.2+70

DEMOCRATIC SOCIALIST REPUBLIC OF SRI LANKA

RURAL INFRASTRUCTURE IMPROVEMENT PROJECT IN WALAWE LEFT BANK AREA

TITLE OF DRAWING

給水施設
送水路／平面縦断図

DATE | DRAWING No.

JAPAN INTERNATIONAL COOPERATION AGENCY

Plate No.	50

CROSS SECTION OF PIPE LINE

1 : 20

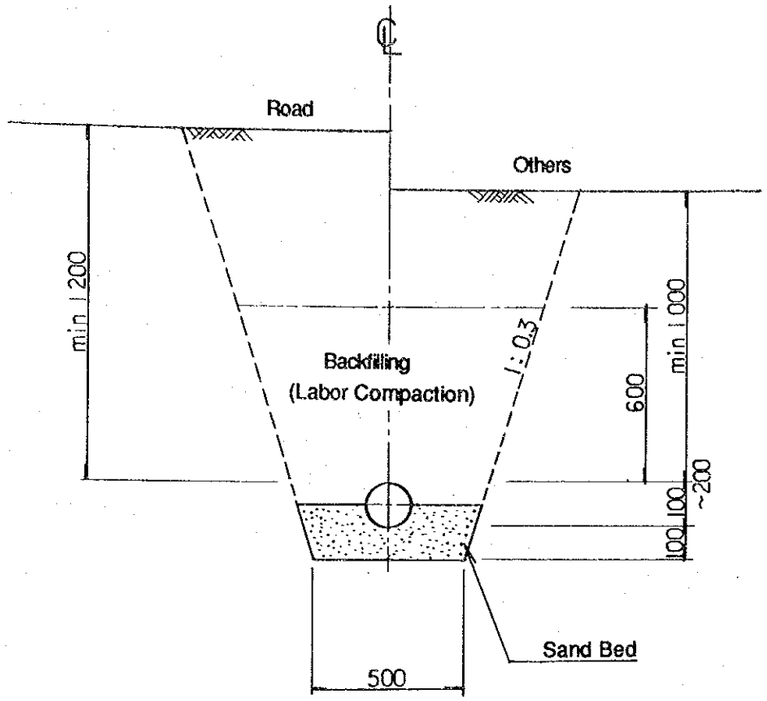

AIR VALVE BOX

1 : 30

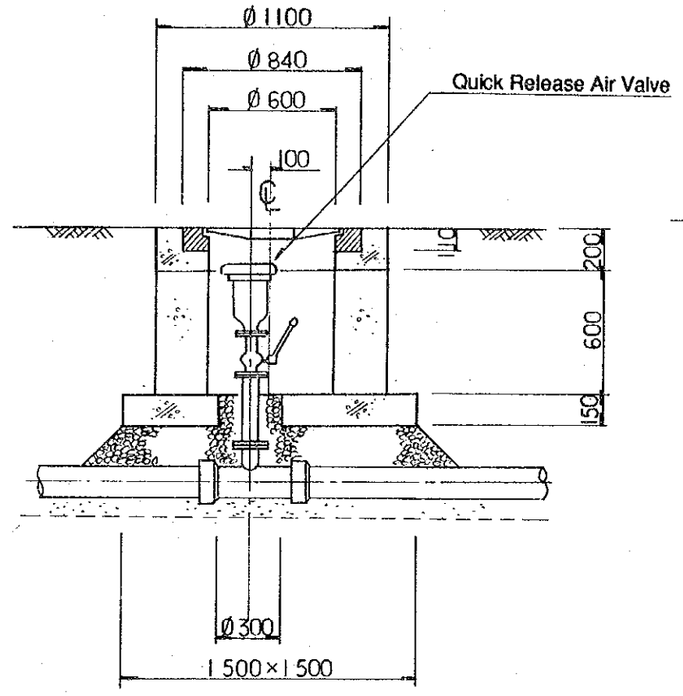

SLUICE VALVE BOX

1 : 20

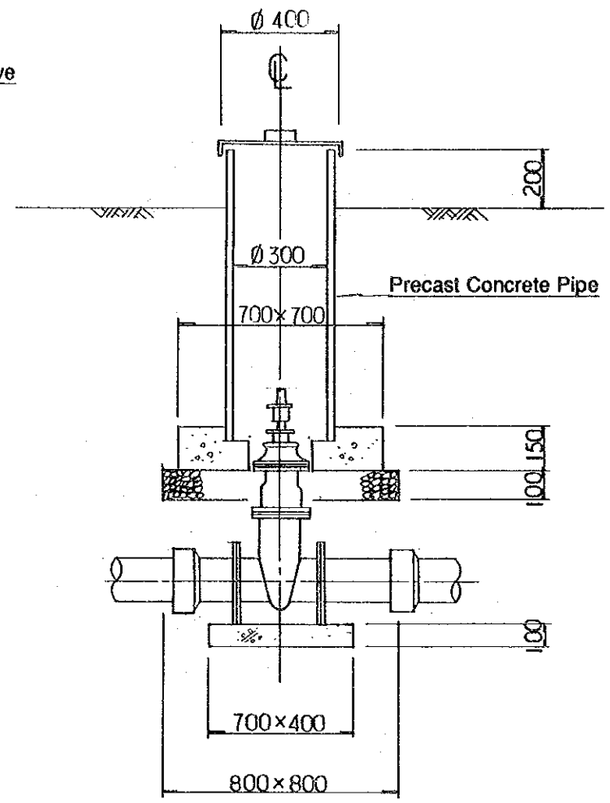

ANCHOR BLOCK

1 : 20

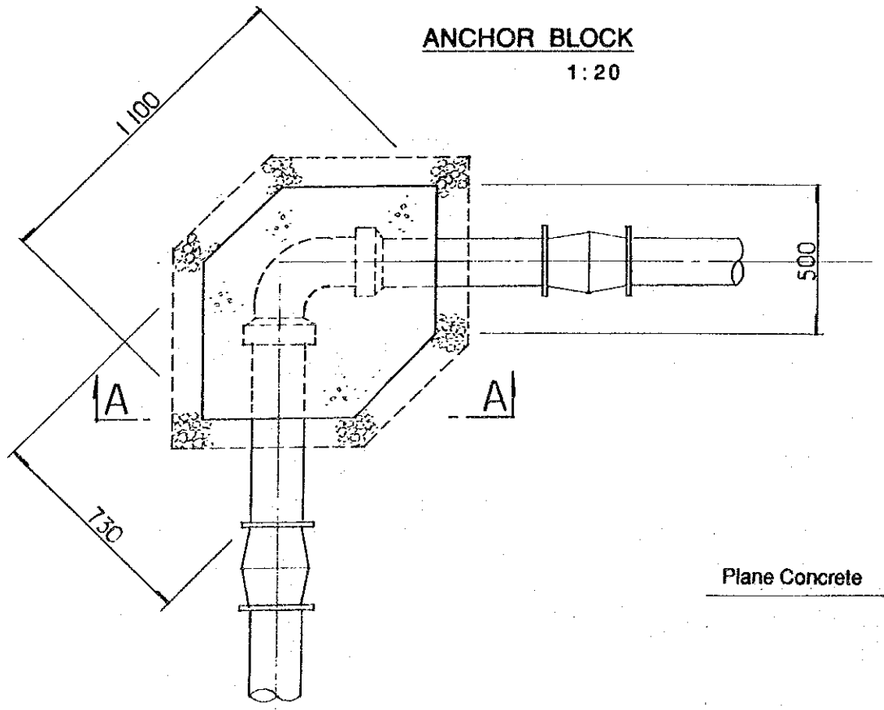

SECTION A - A

1 : 20

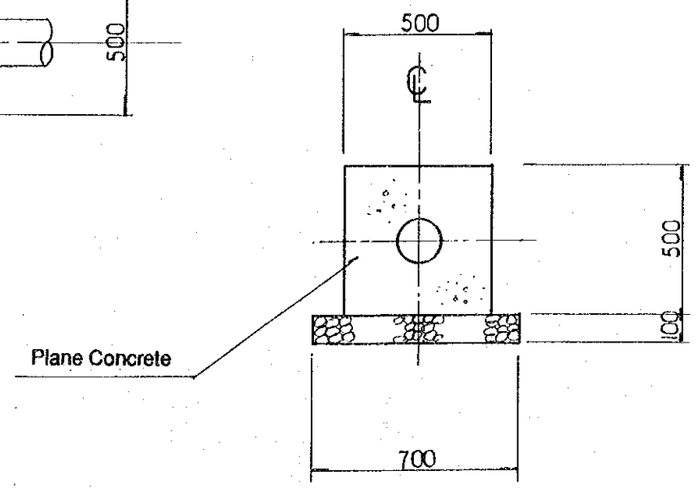

DEMOCRATIC SOCIALIST REPUBLIC OF SRI LANKA			
RURAL INFRASTRUCTURE IMPROVEMENT PROJECT IN WALAWE LEFT BANK AREA			
TITLE OF DRAWING 給水施設 送水路／付帯工構造図			
DATE		DRAWING No.	
JAPAN INTERNATIONAL COOPERATION AGENCY			

Plate No.	5 1

WATER DISTRIBUTION TOWER

1 : 200

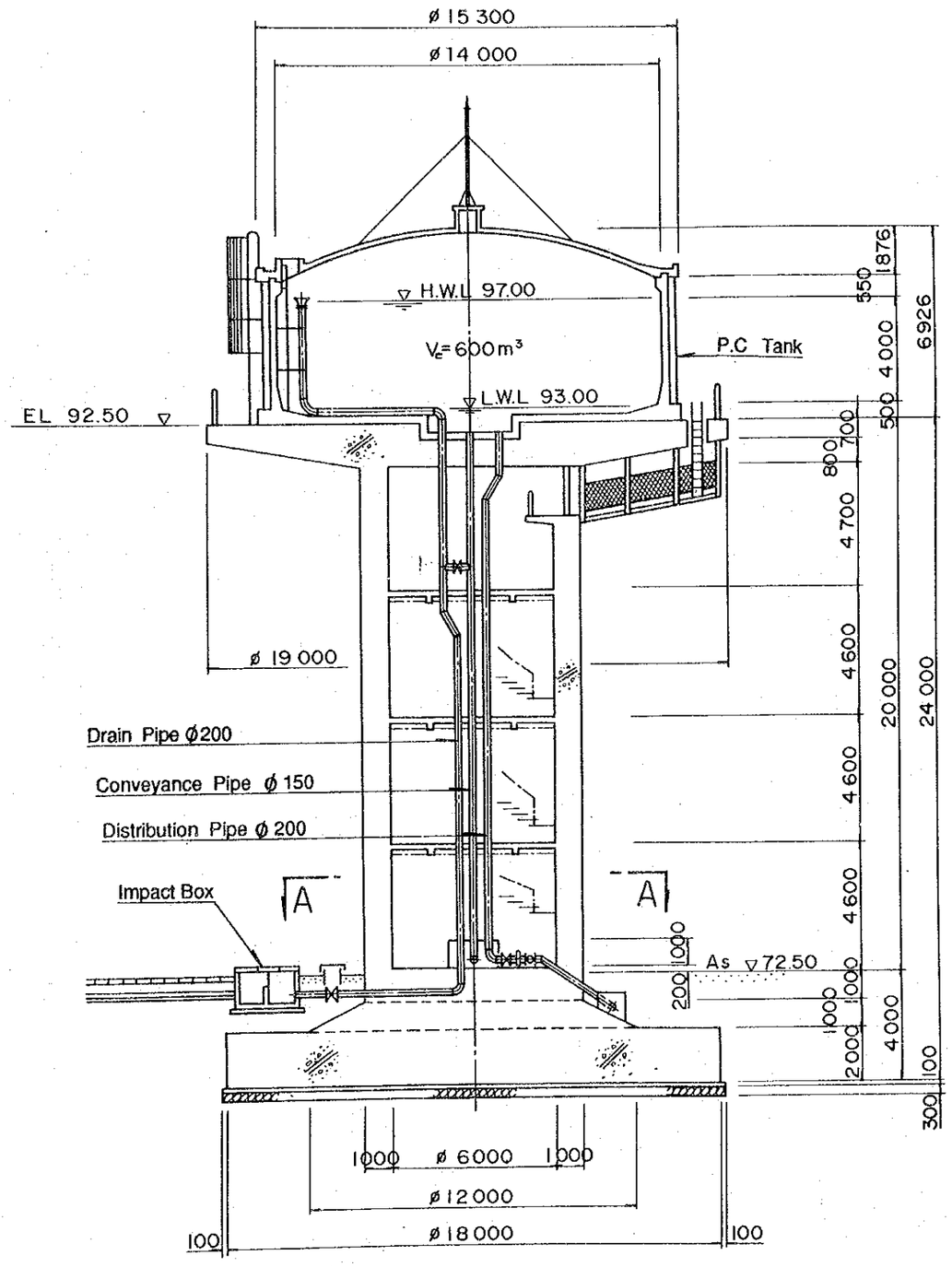

SECTION A - A

1 : 100

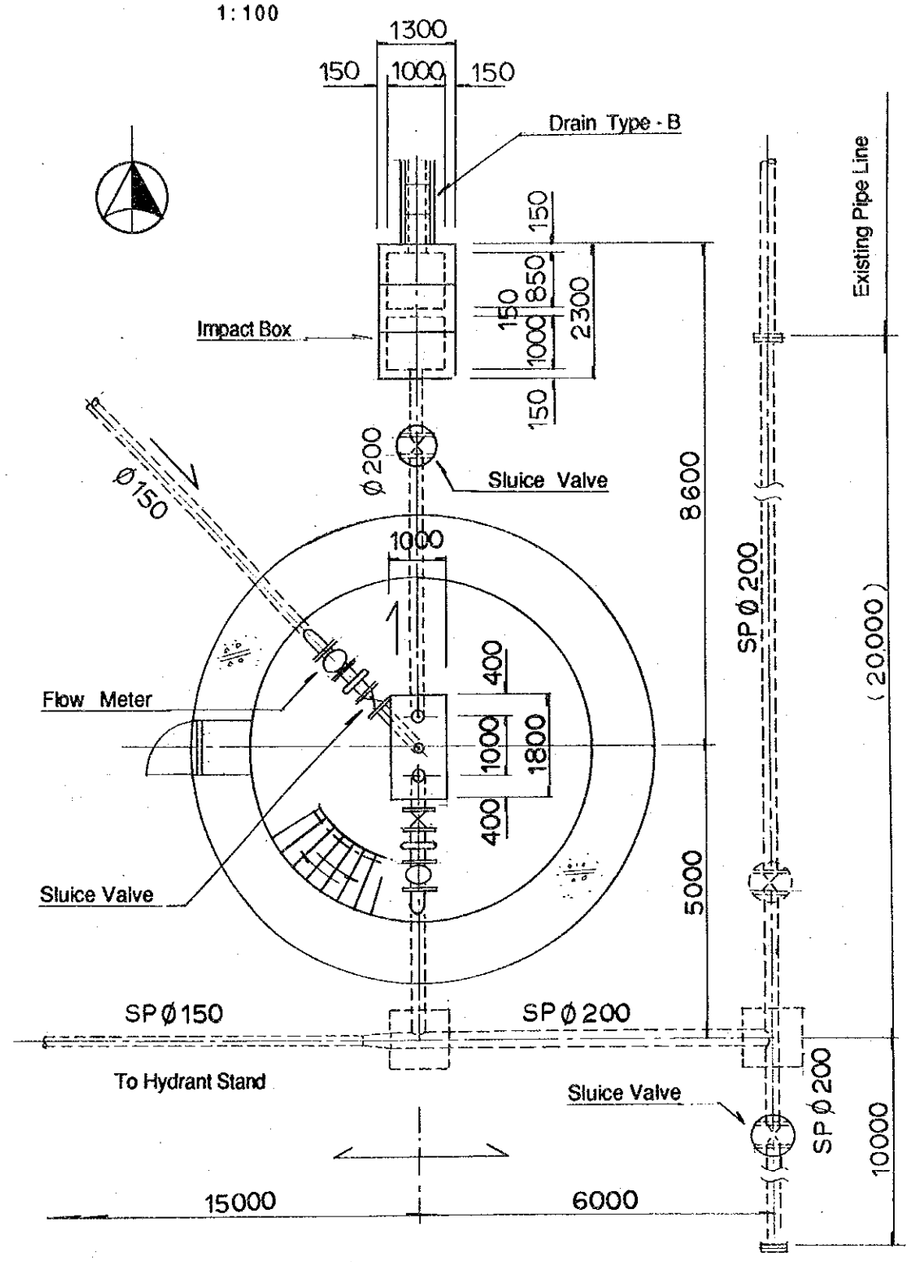

DEMOCRATIC SOCIALIST REPUBLIC OF SRI LANKA	
RURAL INFRASTRUCTURE IMPROVEMENT PROJECT IN WALAWE LEFT BANK AREA	
TITLE OF DRAWING 給水施設 高架配水槽／一般構造図 (1/2)	
DATE	DRAWING No.
JAPAN INTERNATIONAL COOPERATION AGENCY	

Plate No.	52

DISTRIBUTION TANK

1 : 100

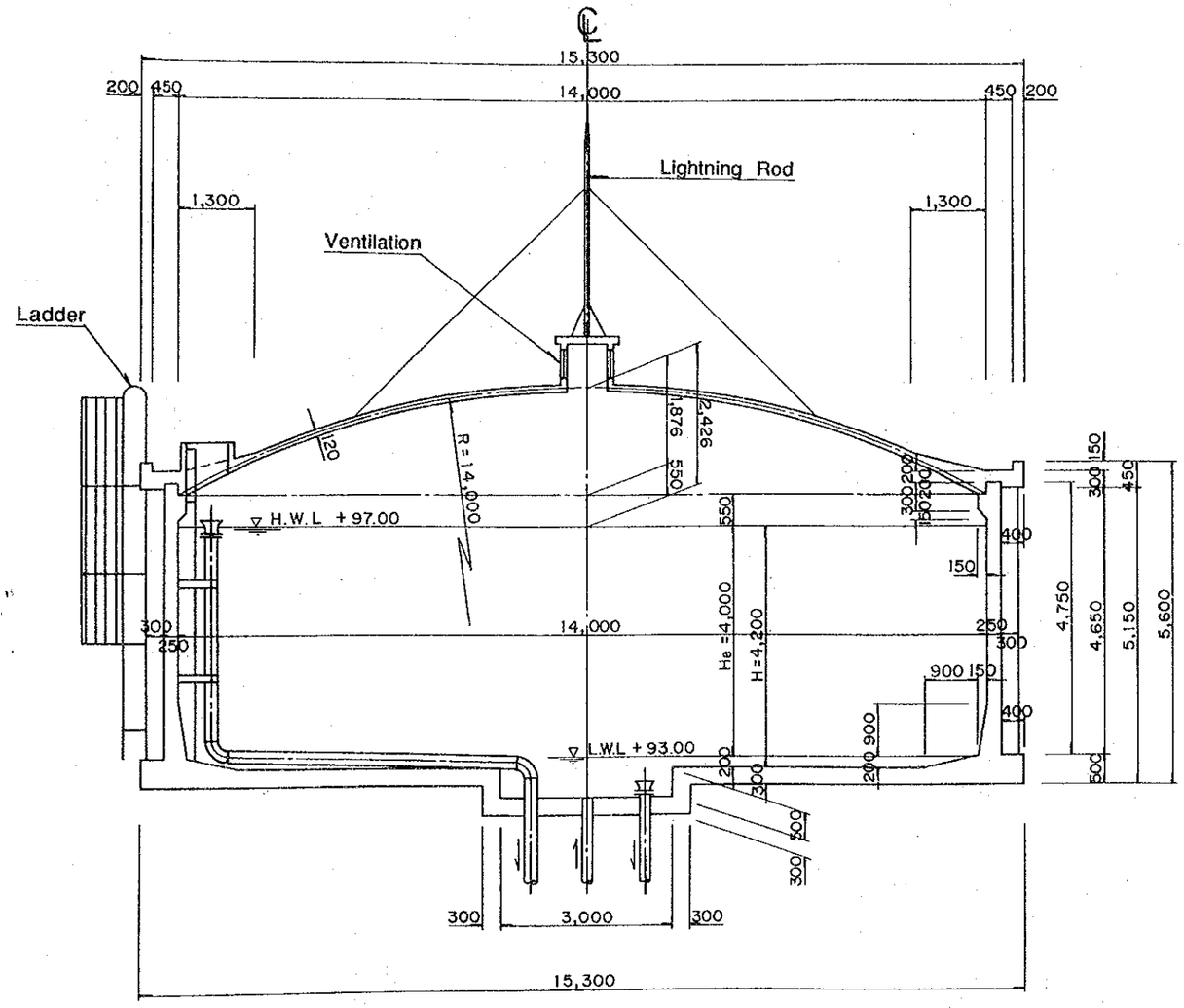

PLAN

1 : 200

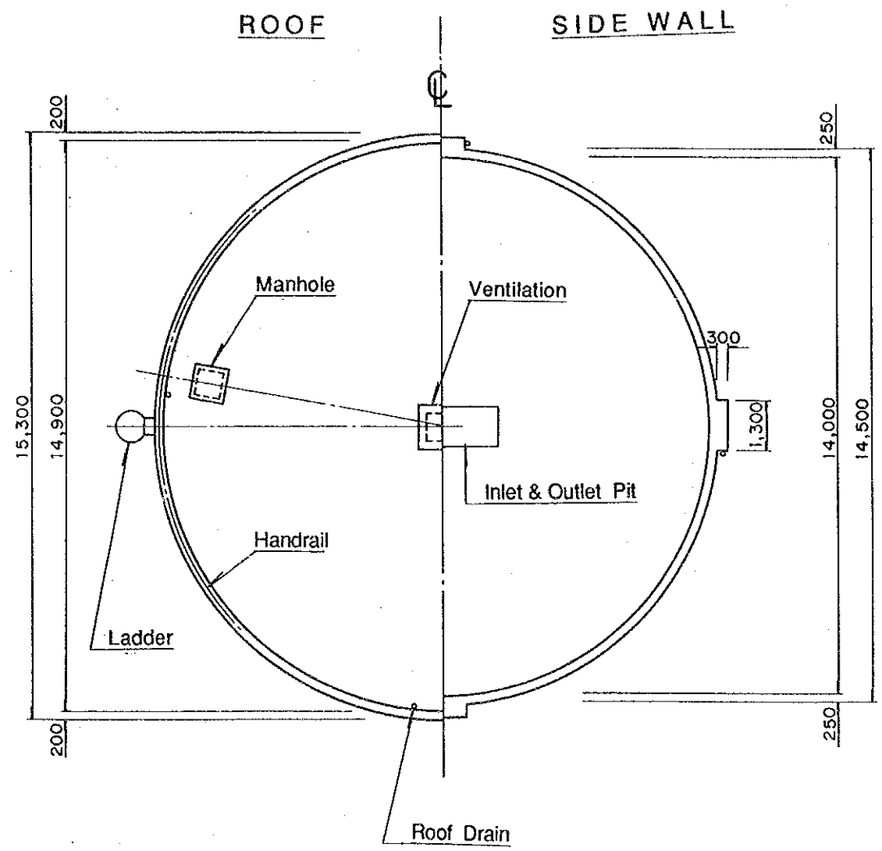

DEMOCRATIC SOCIALIST REPUBLIC OF SRI LANKA	
RURAL INFRASTRUCTURE IMPROVEMENT PROJECT IN WALAWE LEFT BANK AREA	
TITLE OF DRAWING 給水施設 高架配水槽／一般構造図 (2/2)	
DATE	DRAWING No.
JAPAN INTERNATIONAL COOPERATION AGENCY	

Plate No.	5 3

CROSS SECTION OF HYDRANT STAND

1 : 100

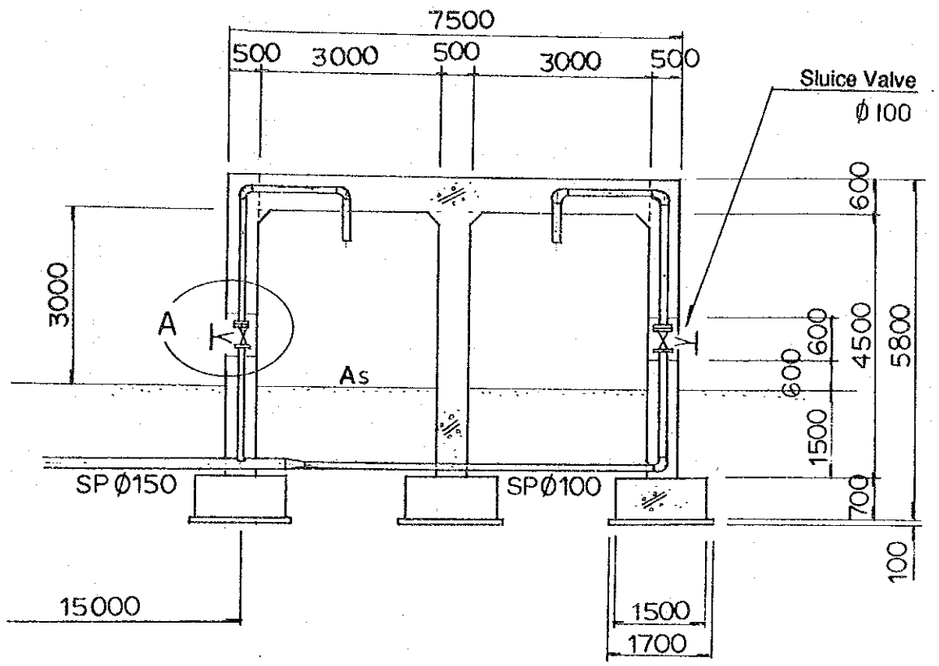

P L A N

1 : 100

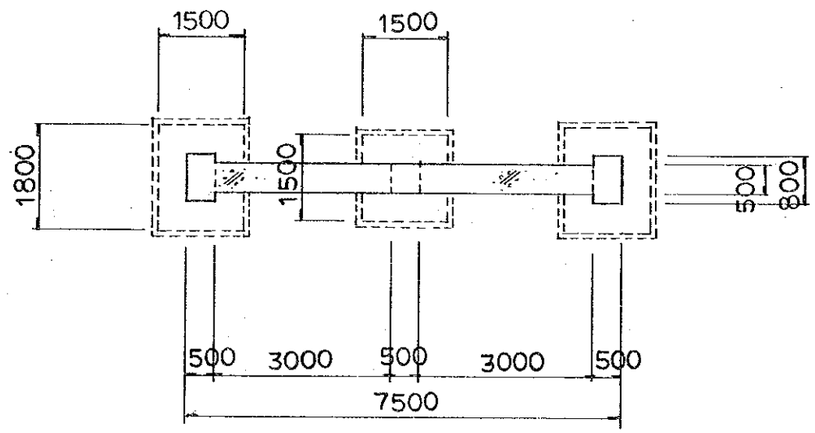

DETAIL A

1 : 40

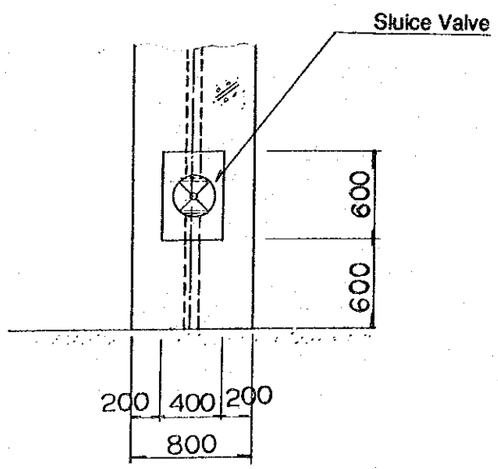

DRAIN TYPE - A

1 : 30

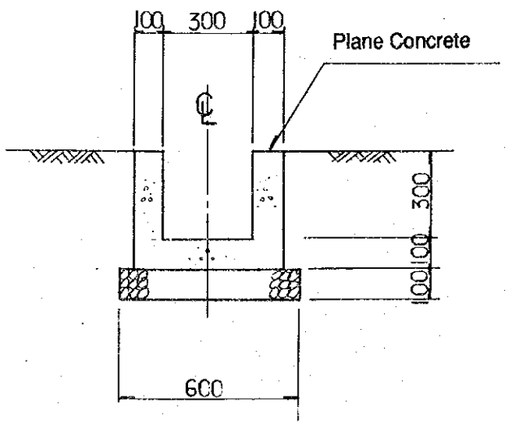

DRAIN TYPE - B

1 : 30

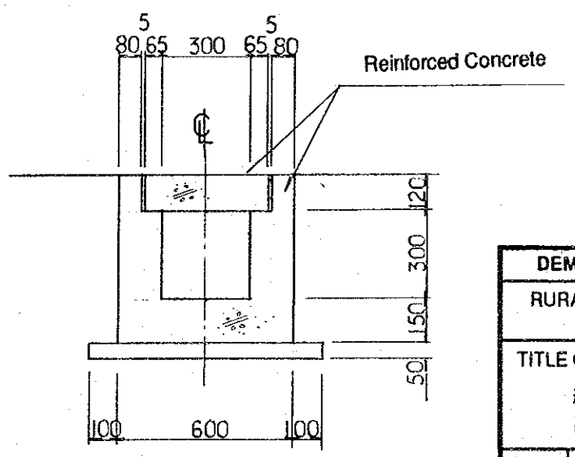

DEMOCRATIC SOCIALIST REPUBLIC OF SRI LANKA	
RURAL INFRASTRUCTURE IMPROVEMENT PROJECT IN WALAWE LEFT BANK AREA	
TITLE OF DRAWING 給水施設 高架配水槽／給水車給水工事	
DATE	DRAWING No.
JAPAN INTERNATIONAL COOPERATION AGENCY	

Plate No.	54

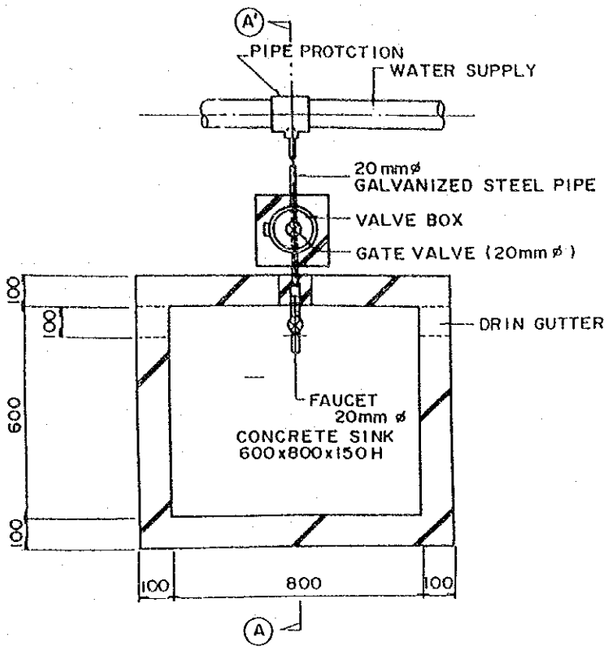

DETAIL OF FAUCET & SINK
NO SCALE

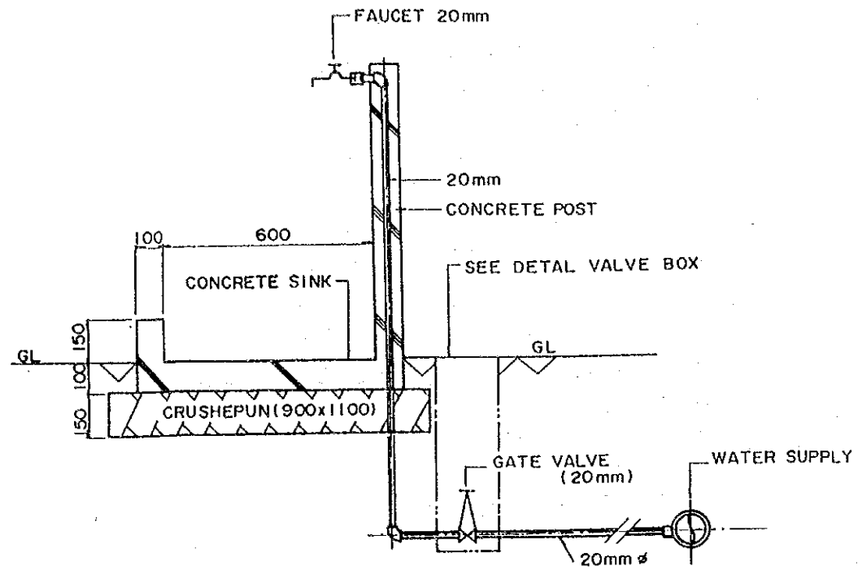

Ⓐ - Ⓐ' SECTION
NO SCALE

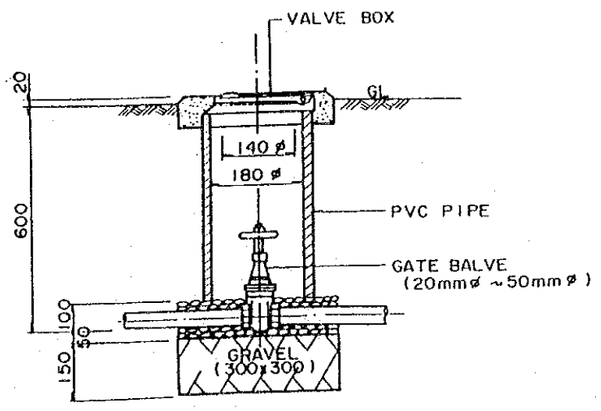

DETAIL OF VALVE BOX
NO SCALE

DEMOCRATIC SOCIALIST REPUBLIC OF SRI LANKA			
RURAL INFRASTRUCTURE IMPROVEMENT PROJECT IN WALAWE LEFT BANK AREA			
TITLE OF DRAWING 給水施設 公共水栓一般構造図			
DATE		DRAWING No.	
JAPAN INTERNATIONAL COOPERATION AGENCY			

JICA