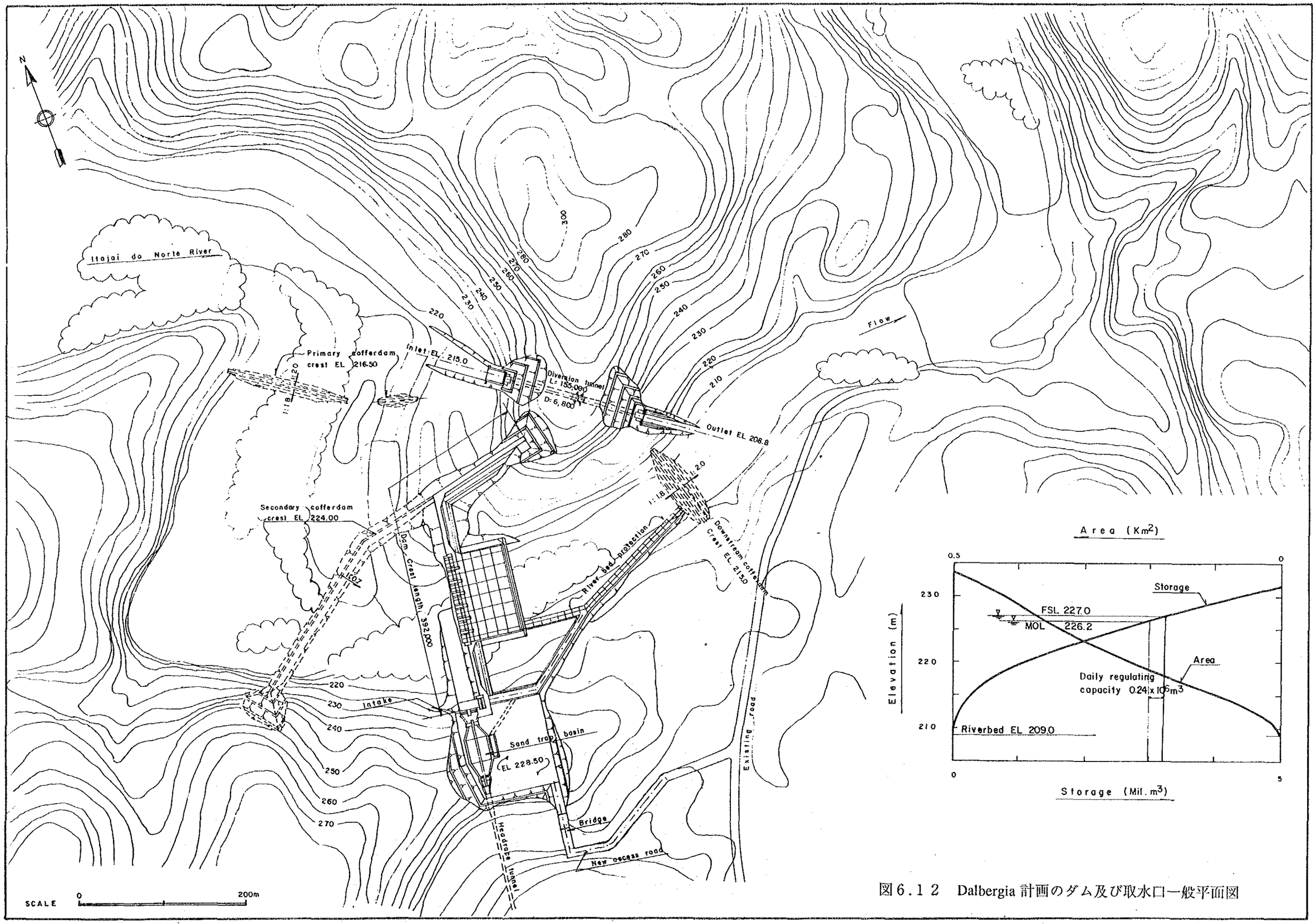

図6.12　Dalbergia 計画のダム及び取水口一般平面図

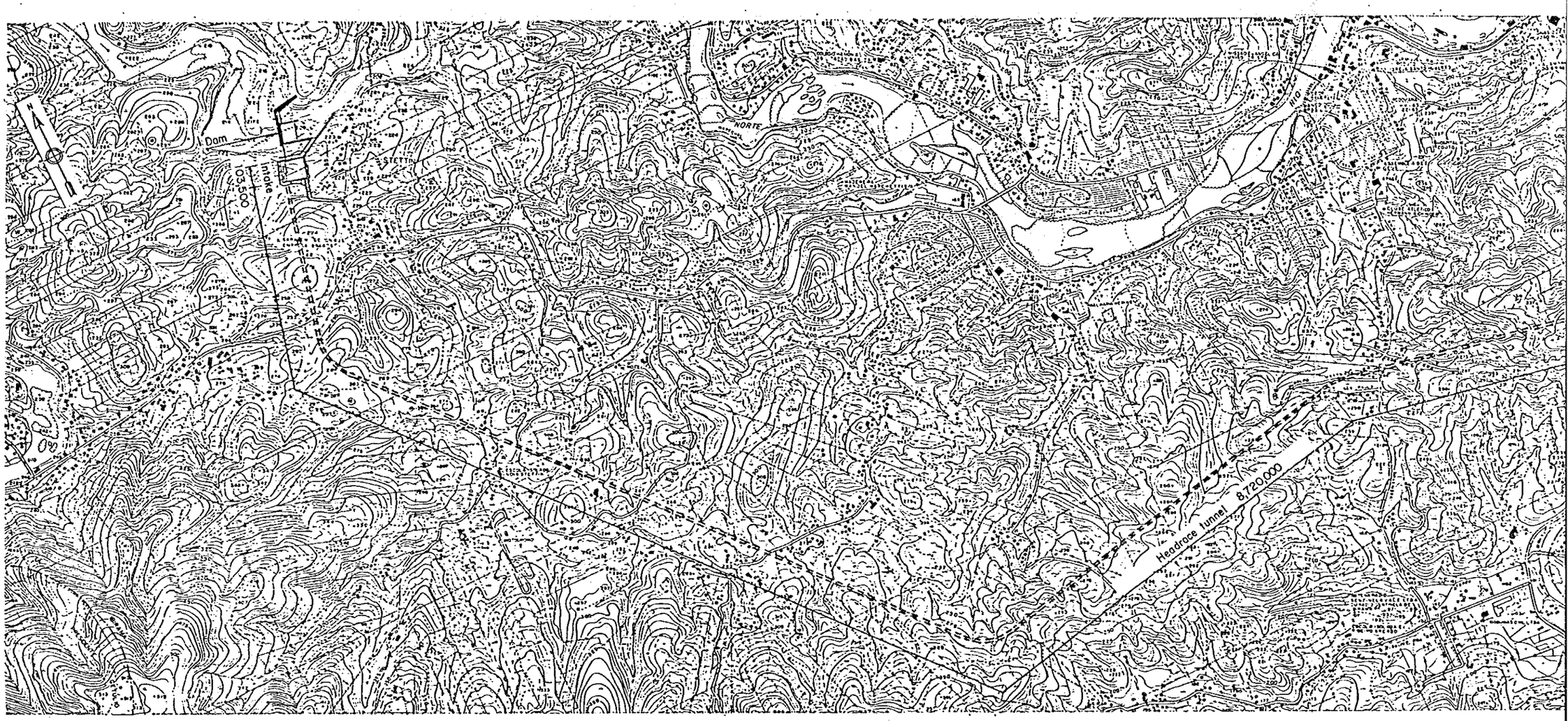

PLAN SCALE A

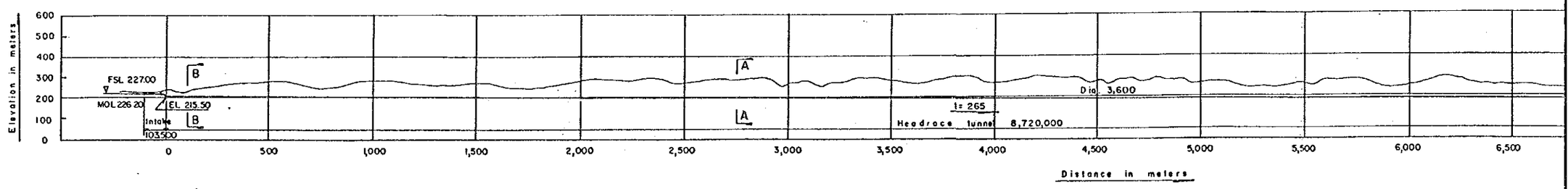

PROFILE SCALE A

SCALE A 0 — 1,000 m

SCALE B. 0 — 10 m

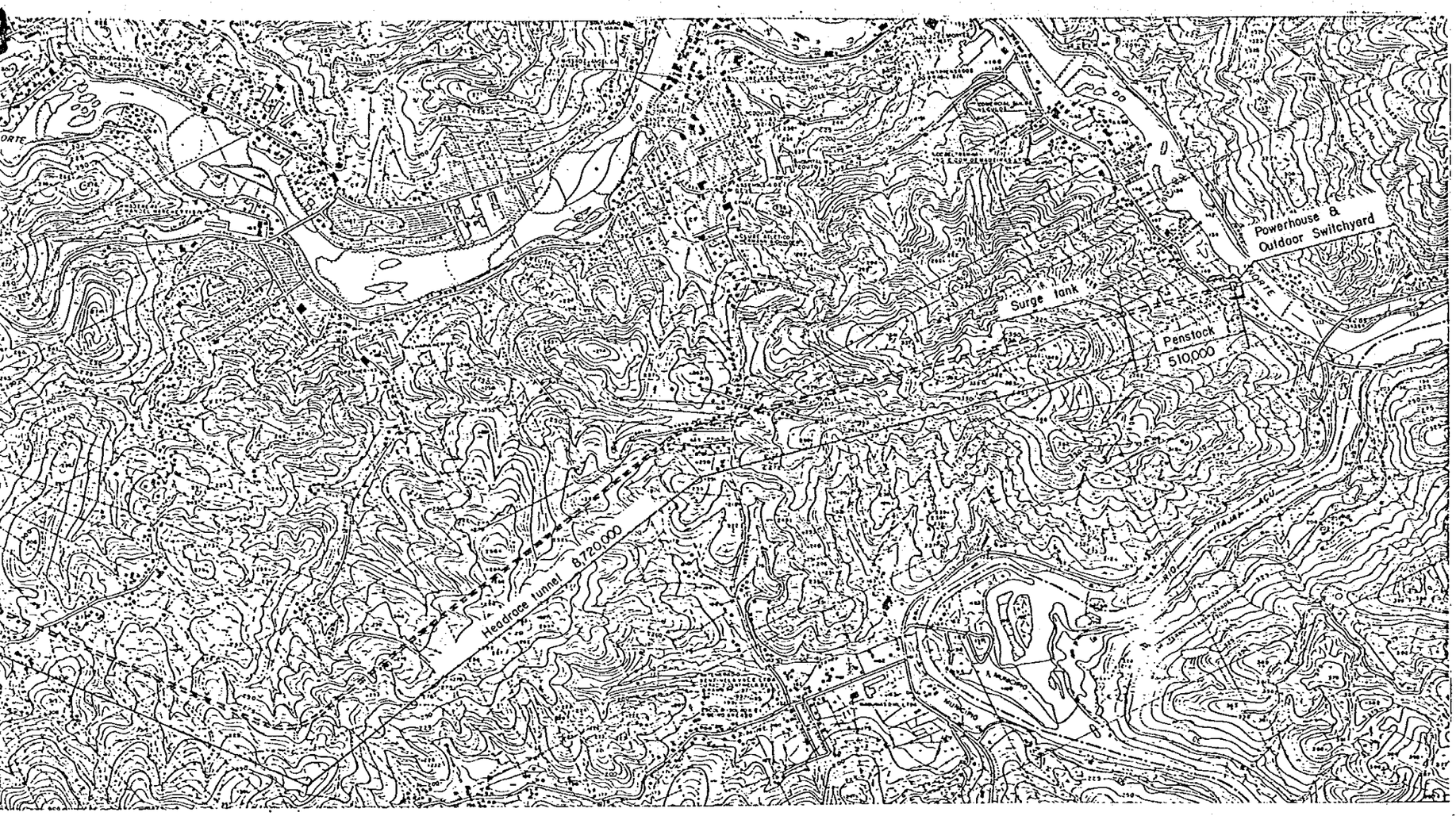

PLAN SCALE A

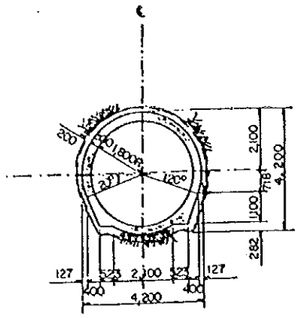

SECTION A-A

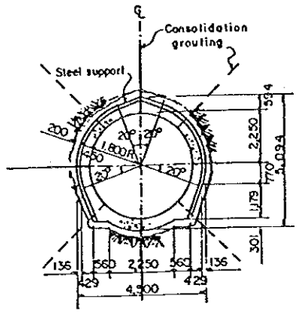

SECTION B-B

TYPICAL SECTION OF HEADRACE TUNNEL SCALE B

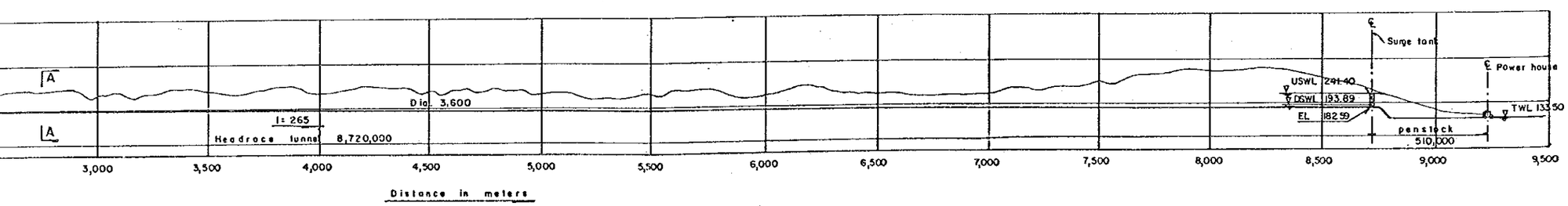

PROFILE SCALE A

図6.13 Dalbergia 計画の発電水路一般平面図及び縦断図

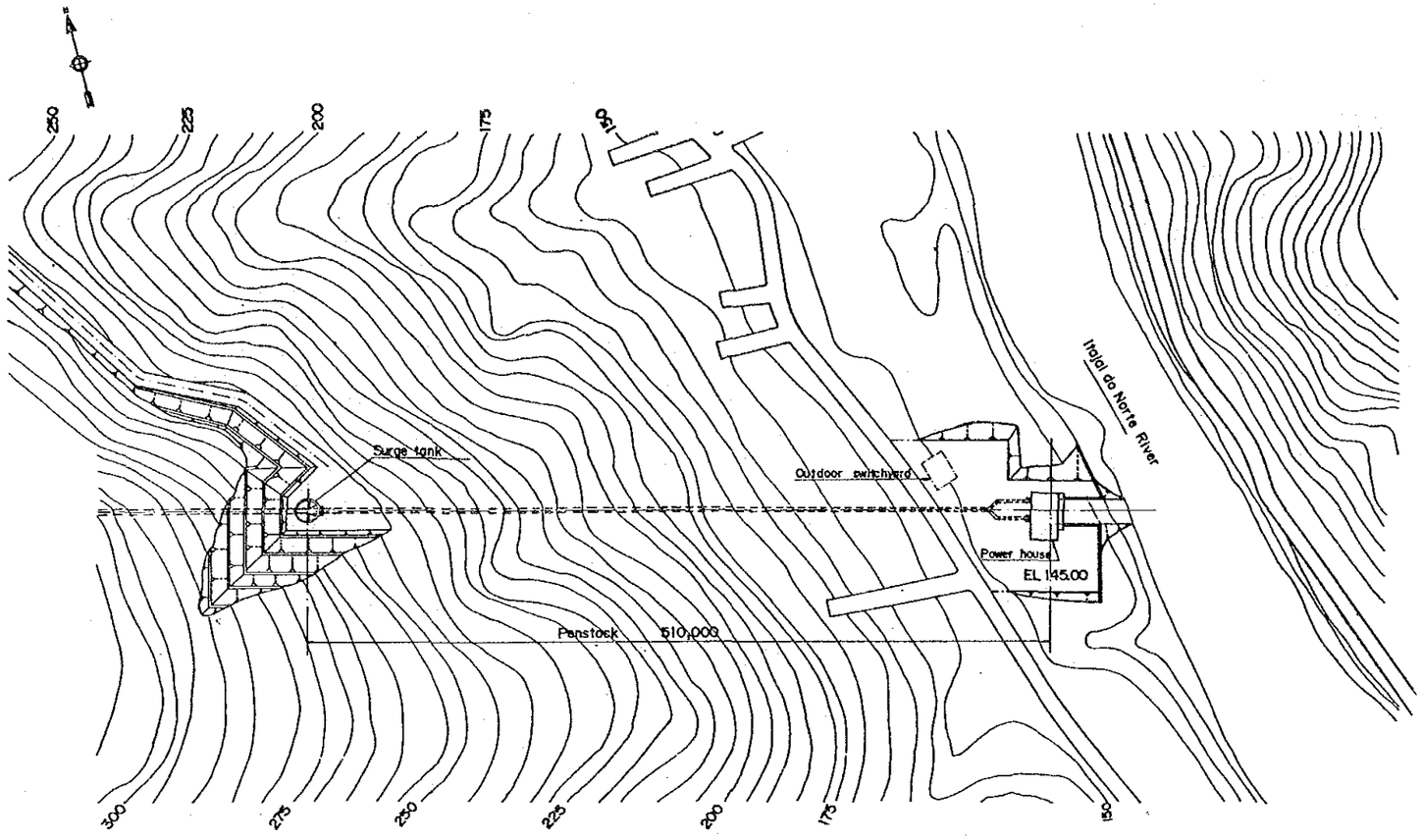

PLAN SCALE A

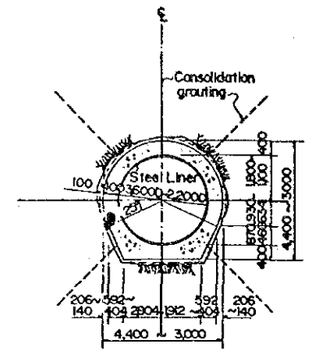

TYPICAL SECTION OF PENSTOCK TUNNEL SCALE B

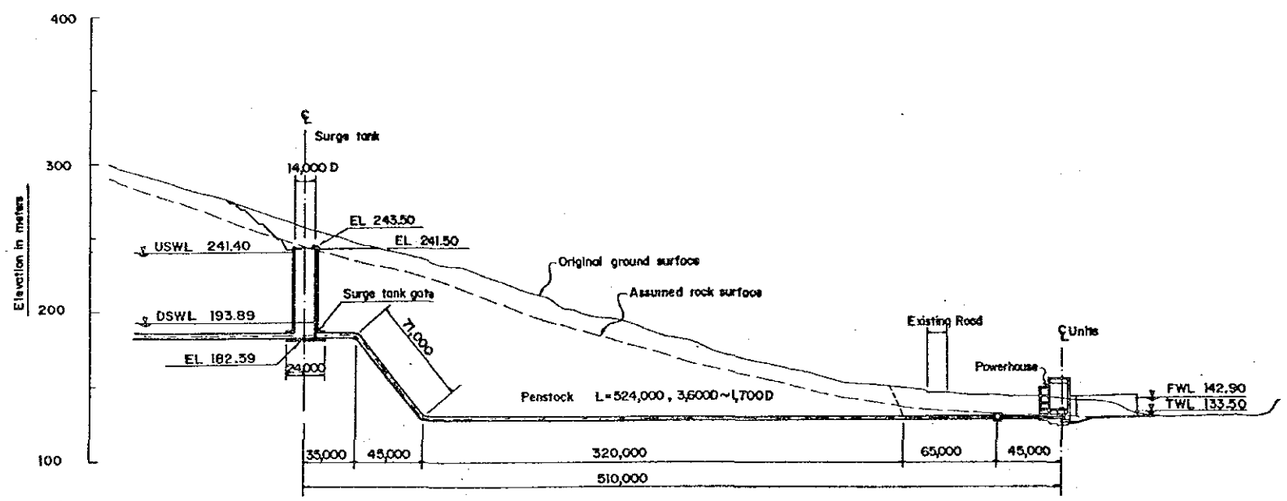

PROFILE SCALE A

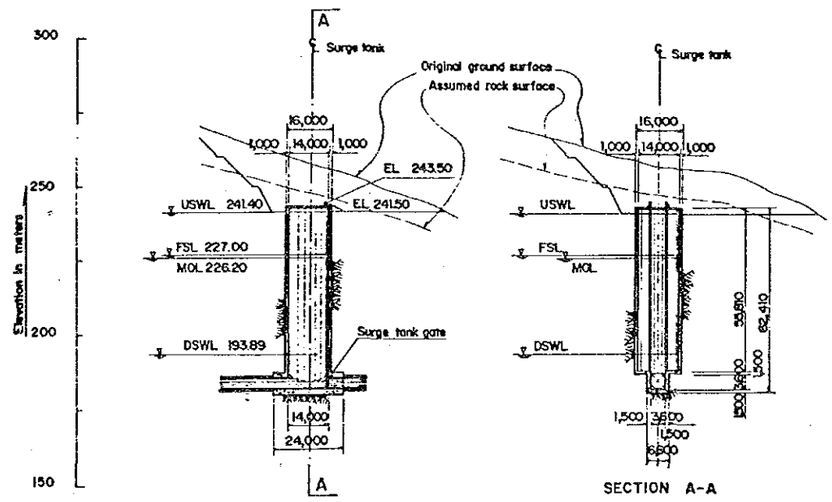

SURGE TANK SCALE C

SCALE A 0 200m
SCALE B 0 10m
SCALE C 0 100m

図6.14 Dalbergia 計画の調圧水槽、水圧鉄管一般平面図及び縦断図

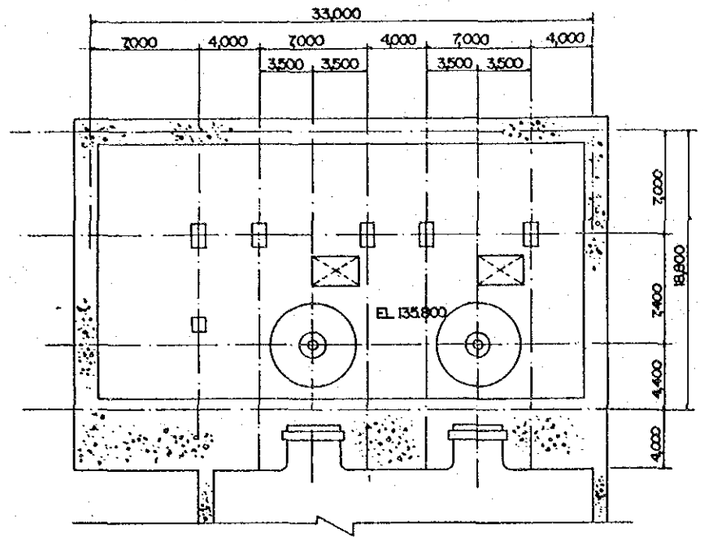

PLAN (EL 135,800)

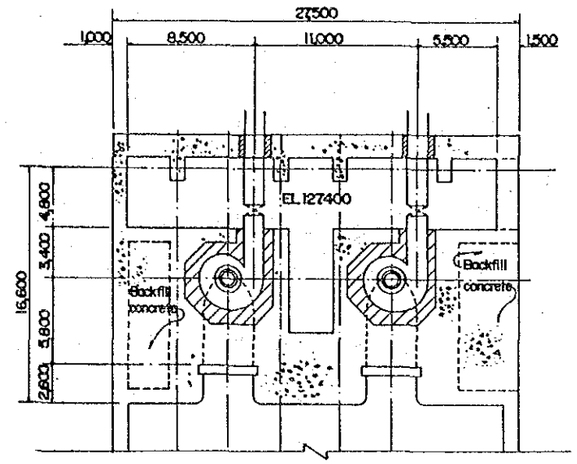

PLAN (EL 129,900)

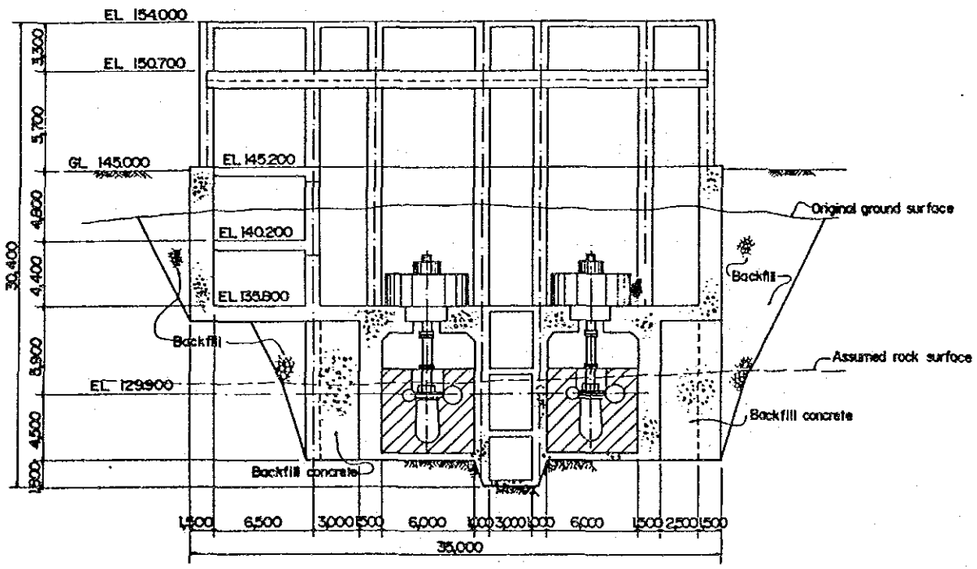

LONGITUDINAL SECTION

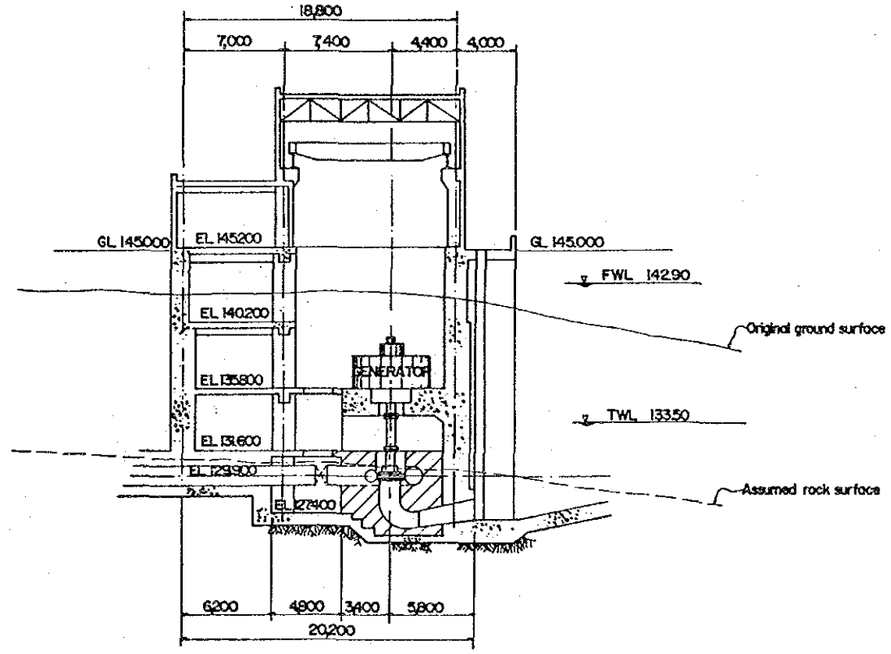

TRANSVERSE SECTION

SCALE 0 20m

図6.1 5　Dalbergia 計画の発電所

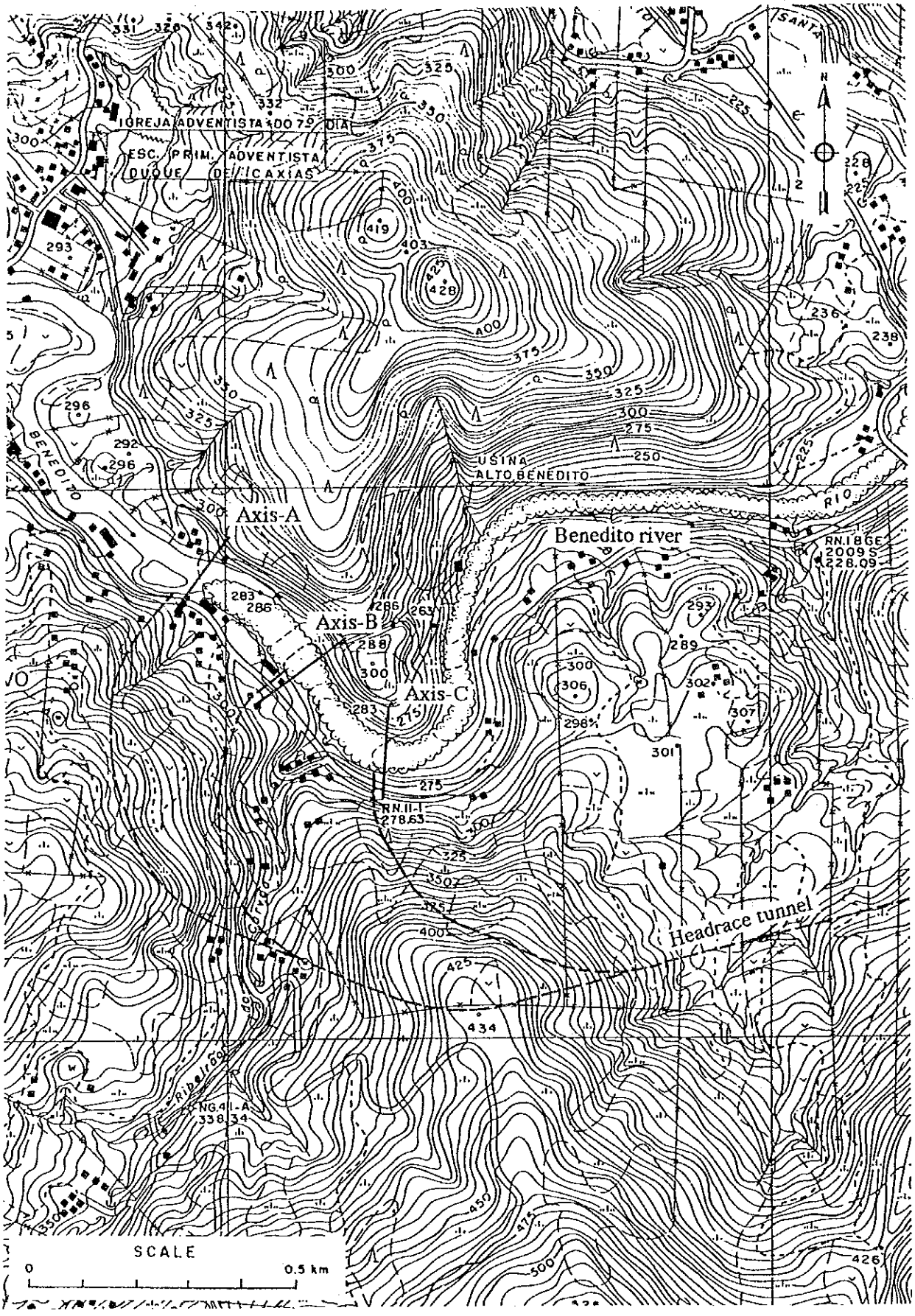

図6.16　Benedito Novo 計画の代替ダム軸の位置図

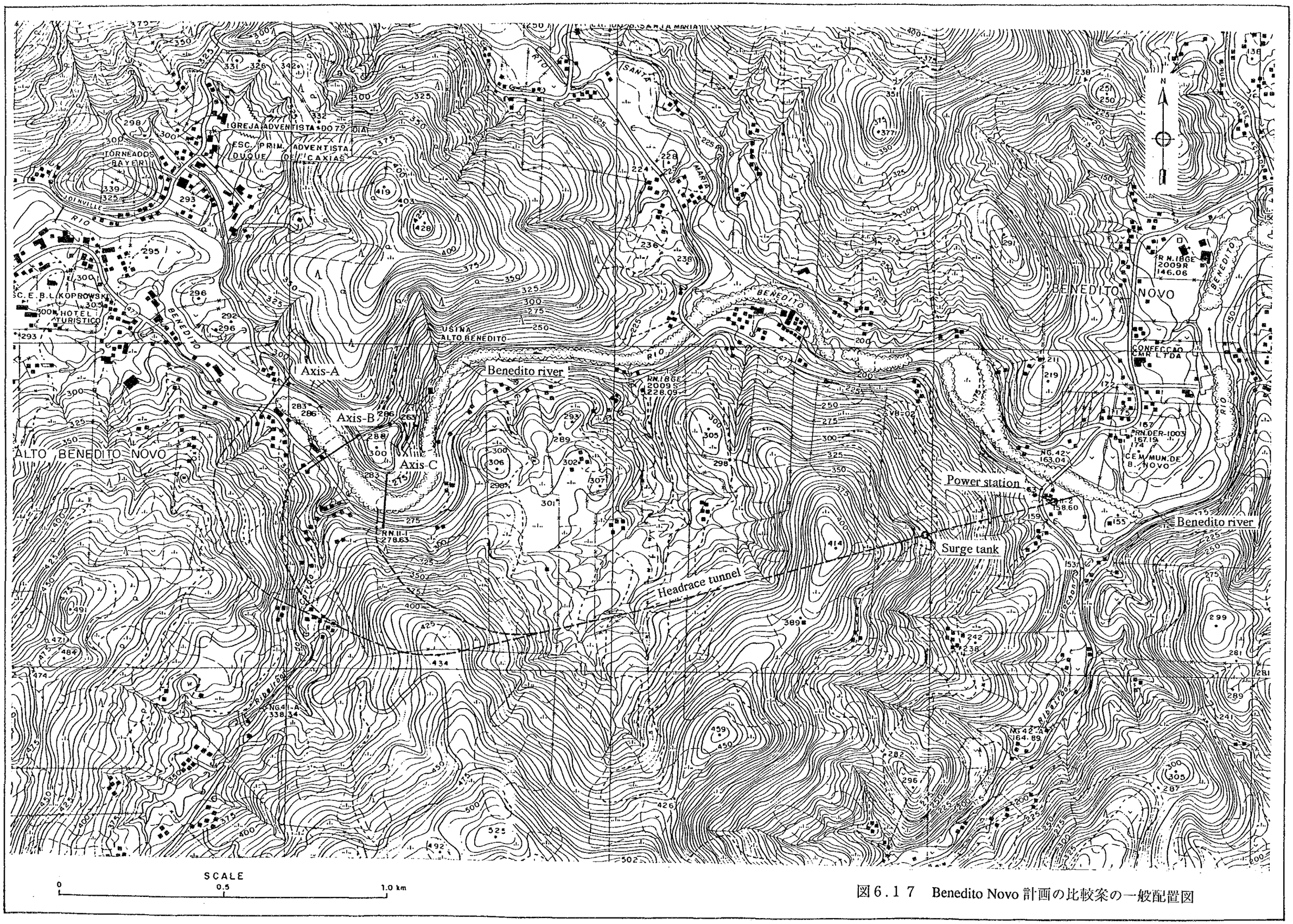

図6.17　Benedito Novo 計画の比較案の一般配置図

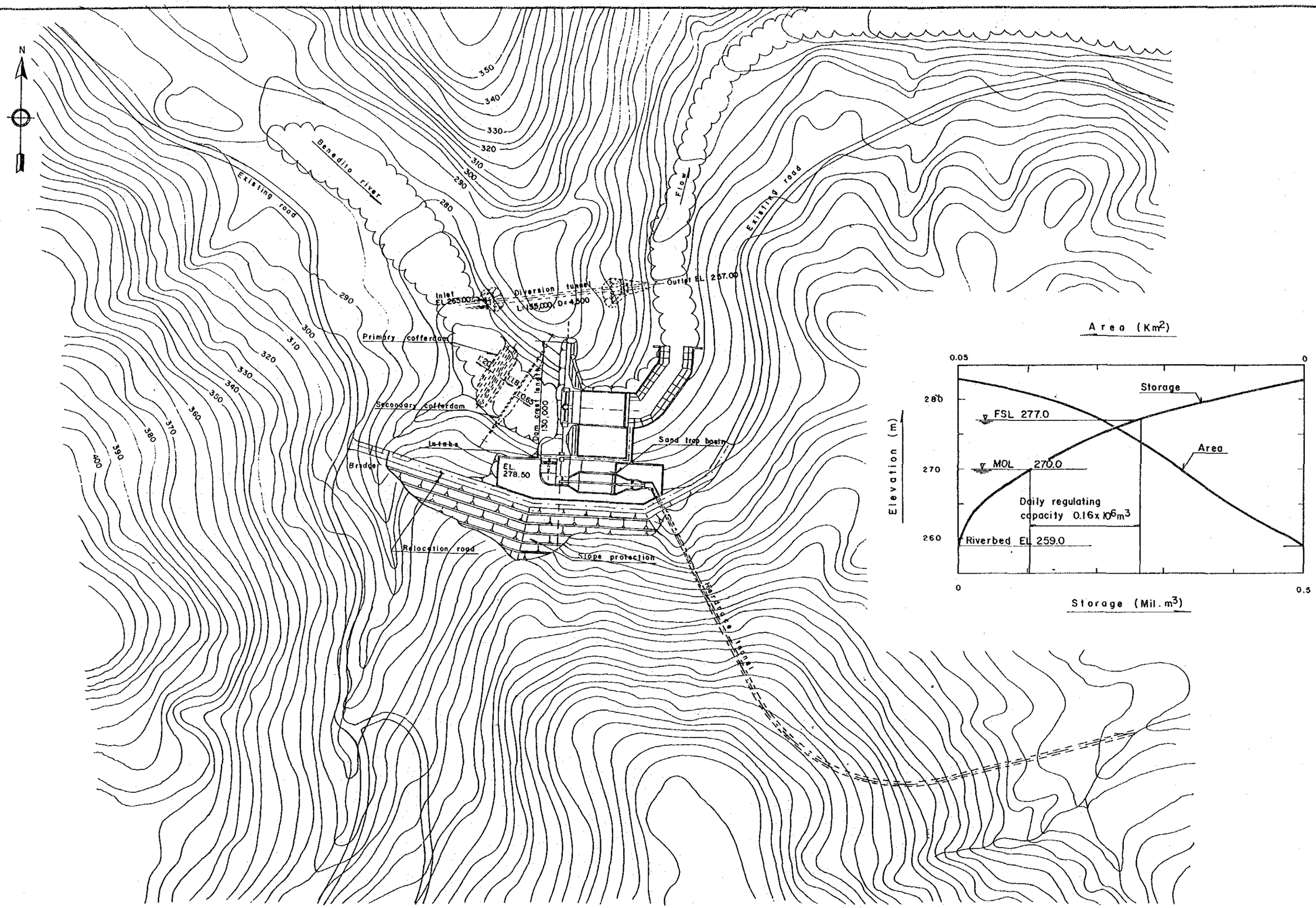

図6.18　Benedito Novo 計画のダム及び取水口一般平面図

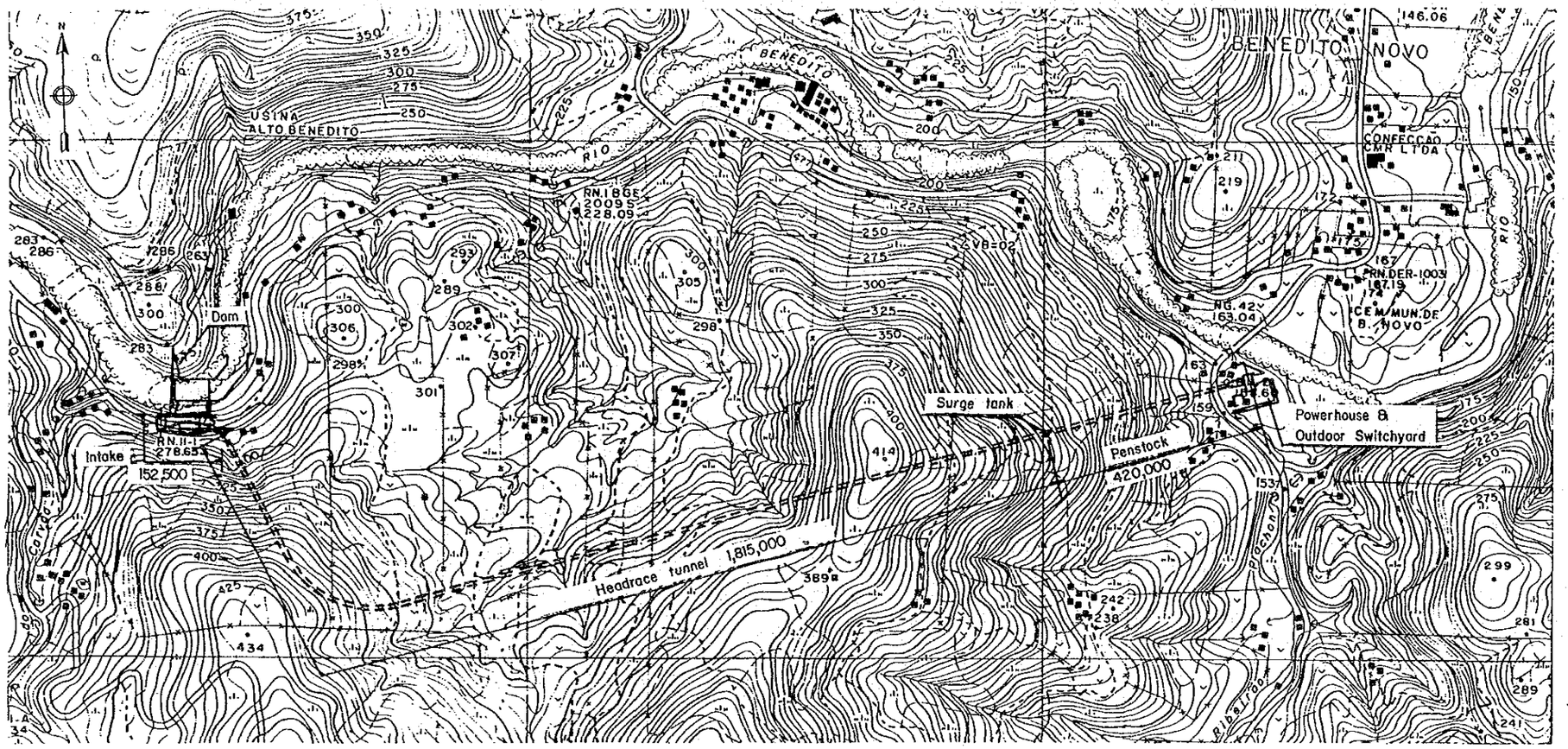

PLAN SCALE A

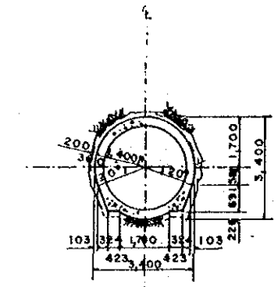

SECTION A-A

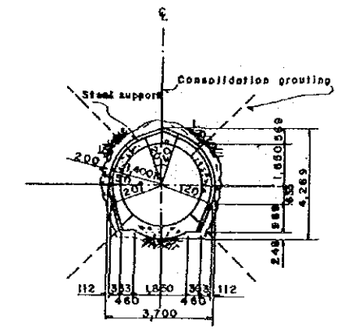

SECTION B-B

TYPICAL SECTION OF HEADRACE TUNNEL
SCALE B

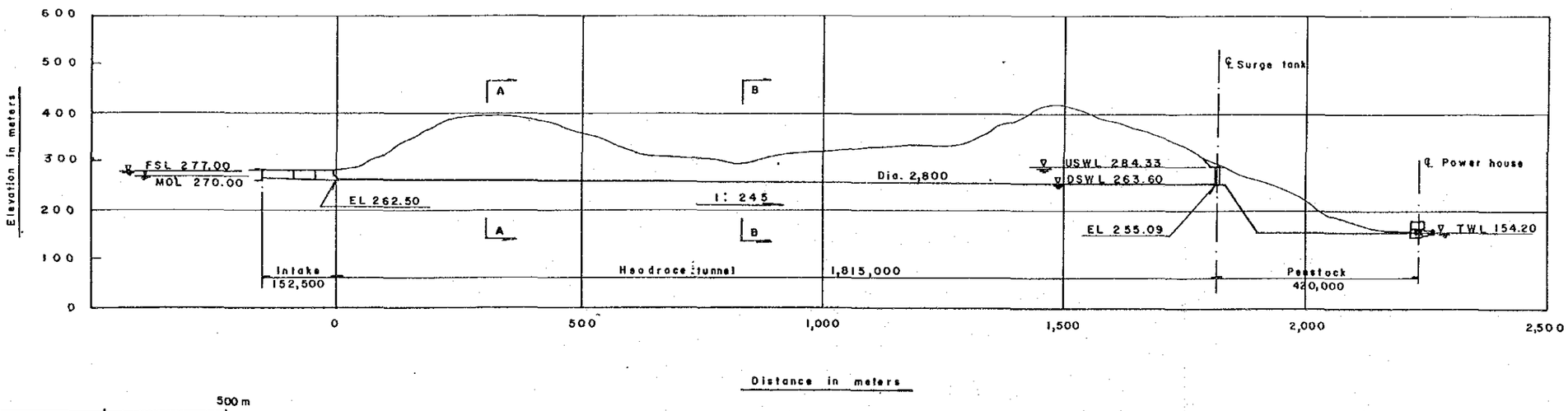

PROFILE SCALE A

SCALE A 0 500 m
SCALE B 0 10 m

図6.19 Benedito Novo 計画の発電水路一般平面図及び縦断図

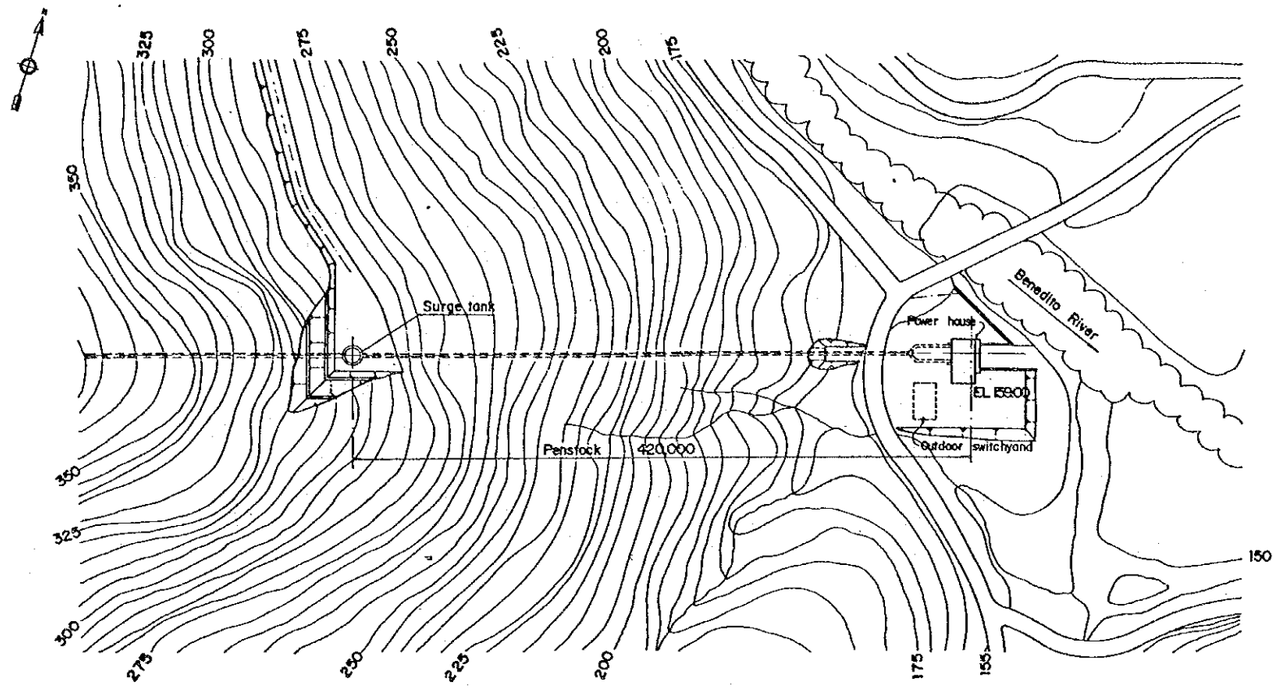

PLAN SCALE A

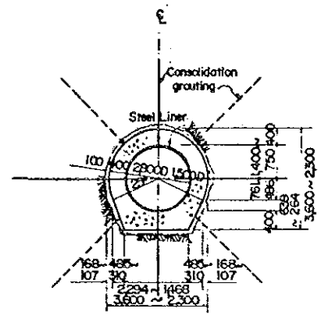

TYPICAL SECTION OF PENSTOCK TUNNEL SCALE B

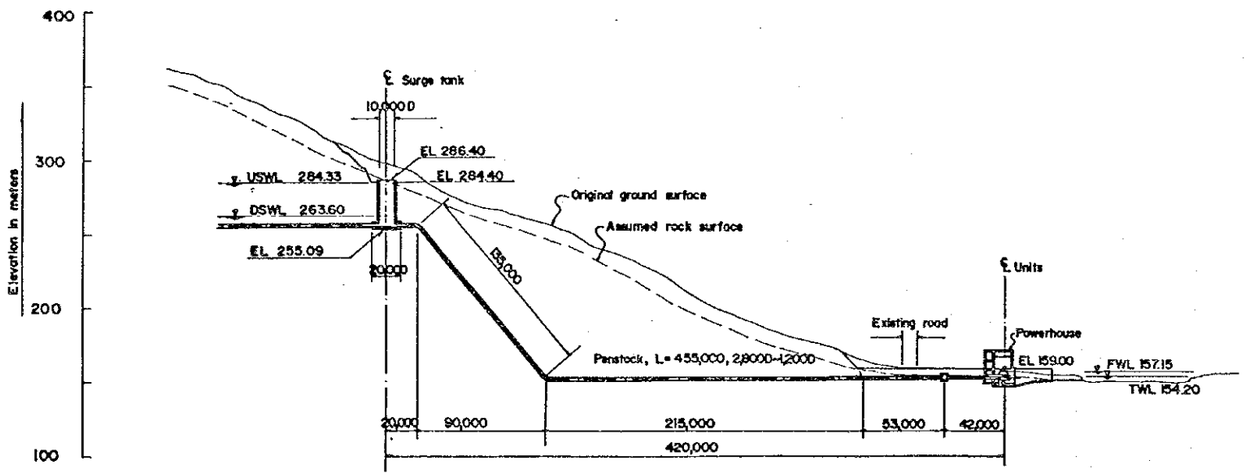

PROFILE SCALE A

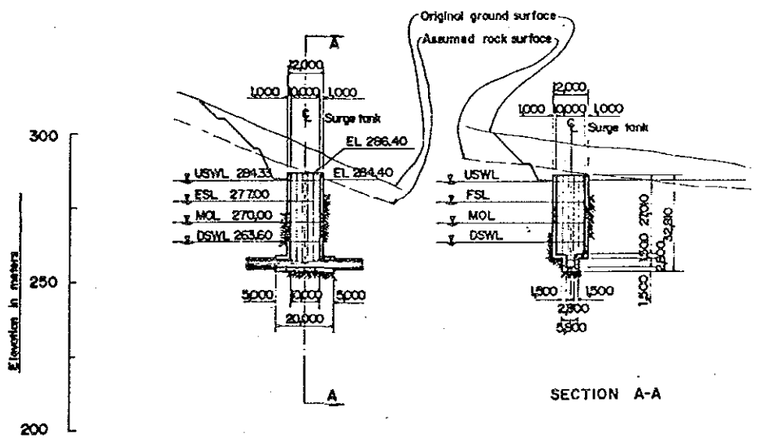

SURGE TANK SCALE C

SCALE A 0 200m
SCALE B 0 10m
SCALE C 0 100m

図6.20 Benedito Novo 計画の調圧水槽、水圧鉄管一般平面図及び縦断図

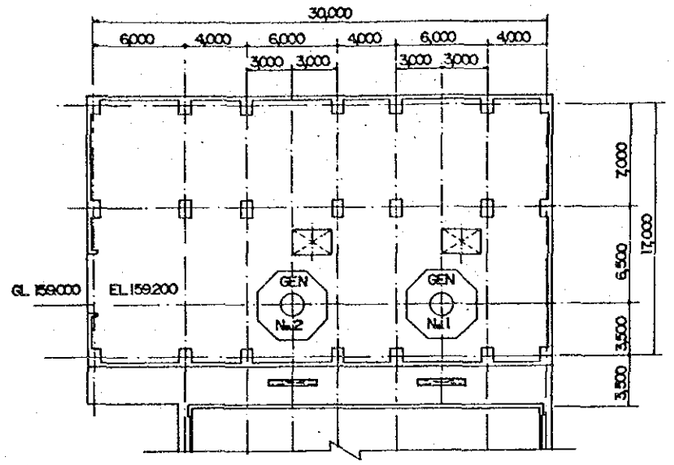

PLAN (EL 159,200)

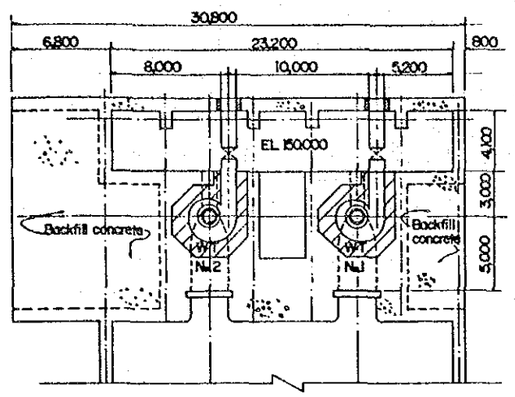

PLAN (EL 152,100)

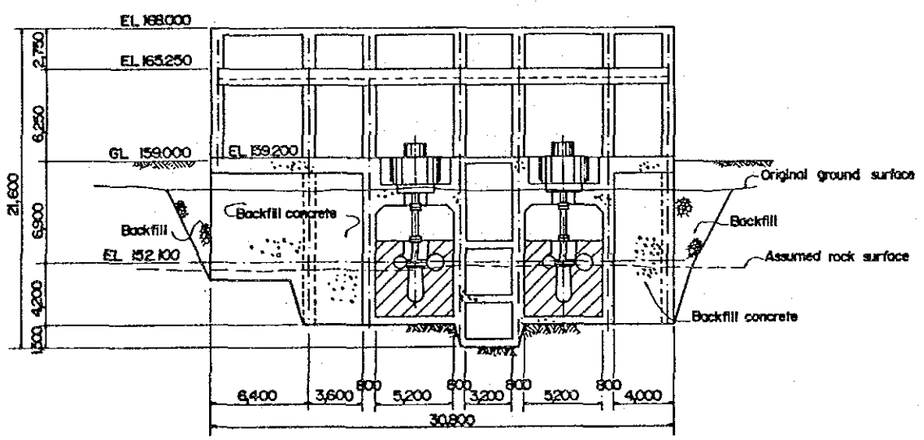

LONGITUDINAL SECTION

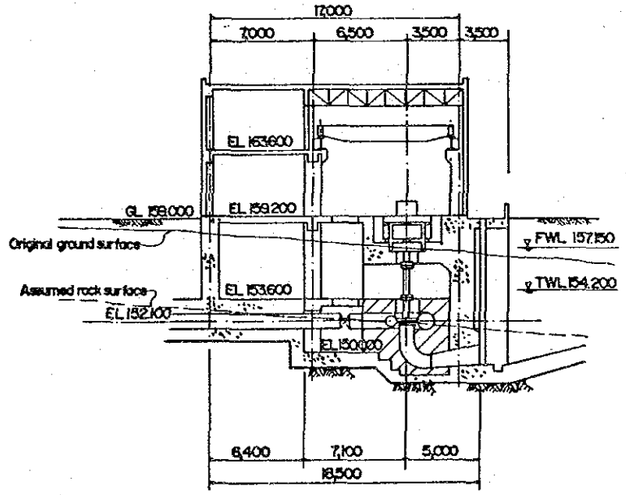

TRANSVERSE SECTION

SCALE 0 20m

図6.21　Benedito Novo 計画の発電所

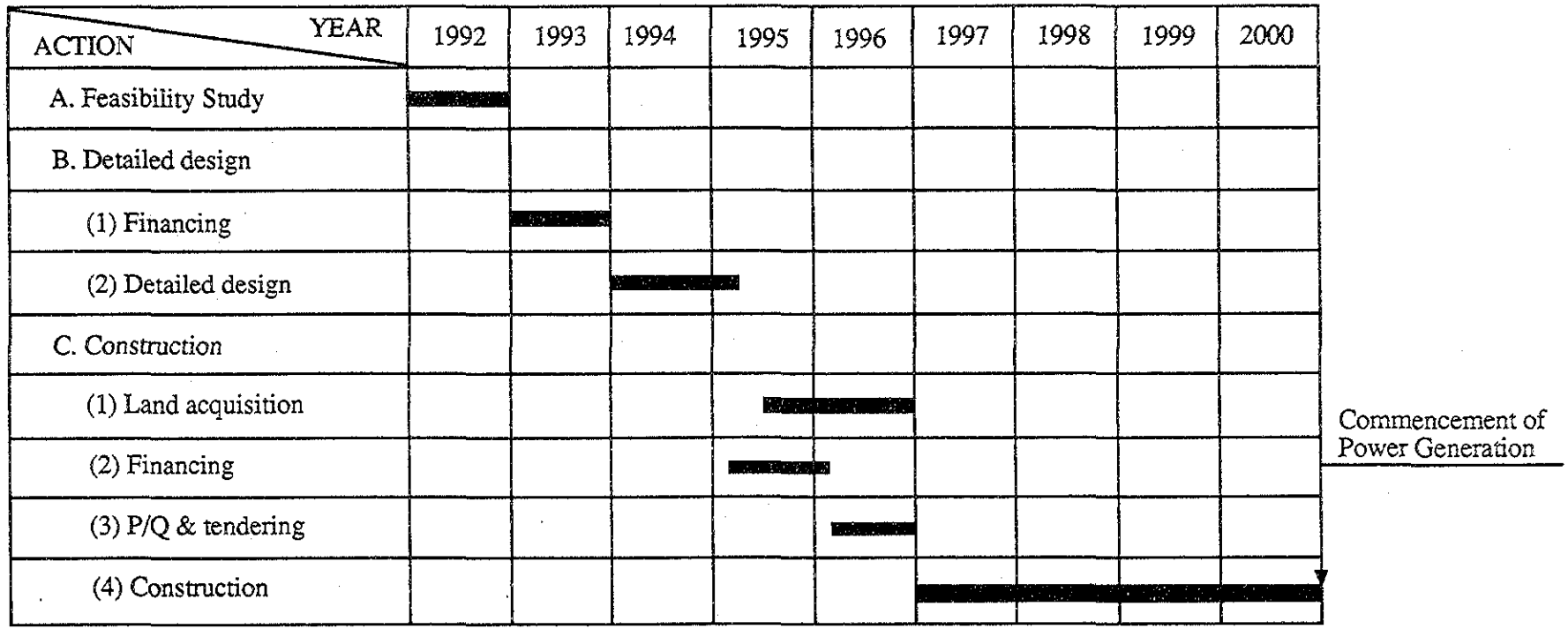

図 7.1　Salto Pilao (1) 計画の実施計画

Description	Unit	Quantity
1. Preparatory Works		
2. River Diversion		
a. Diversion tunnel	m	560
b. Coffering	m^3	32,300 (Secondary)
3. Dam and Spillway		
a. Excavation	m^3	110,400
b. Grouting	m	9,400
c. Concrete	m^3	71,000
d. Installation of gates	t	1,095
4. Intake		
a. Excavation	m^3	316,900
b. Concrete	m^3	40,800
c. Installation of gates	t	196
5. Headrace Tunnel		
a. Excavation	m^3	217,000
b. Concrete	m^3	57,300
6. Surge Tank		
a. Excavation	m^3	183,200
b. Concrete	m^3	4,150
7. Penstock		
a. Excavation	m^3	19,000
b. Installation of penstock pipe	m	500
c. Concrete	m^3	4,100
8. Powerhouse and Tailrace		
- Substructure and Tailrace		
a. Excavation	m^3	282,400
b. Concrete	m^3	25,000
- Superstructure		
9. Switchyard		
10. Installation of Generating		2 Units
Equipment and Testing		
11. Transmission Line	Km	7

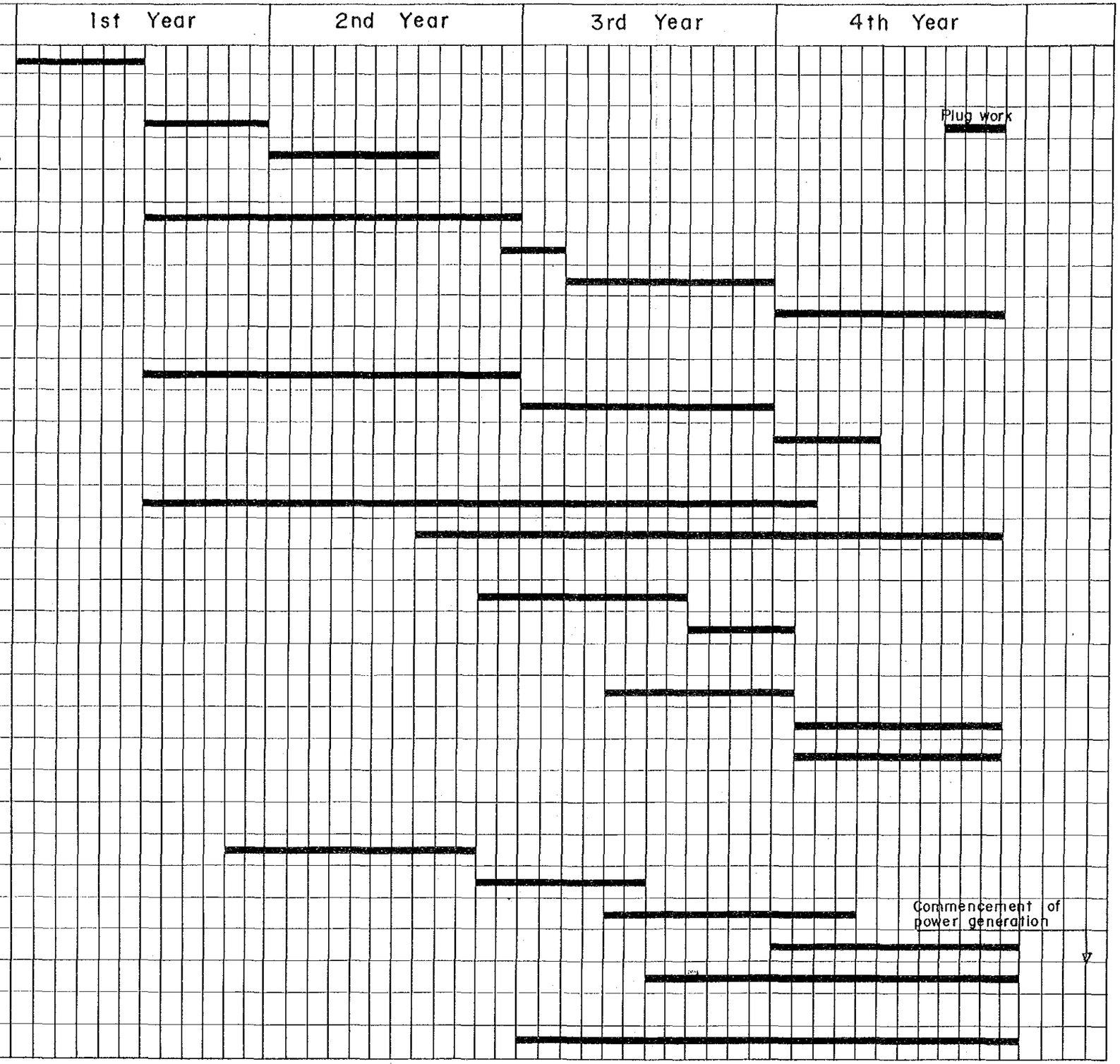

図 7.2　Salto Pilao (1) 計画の工事工程計画

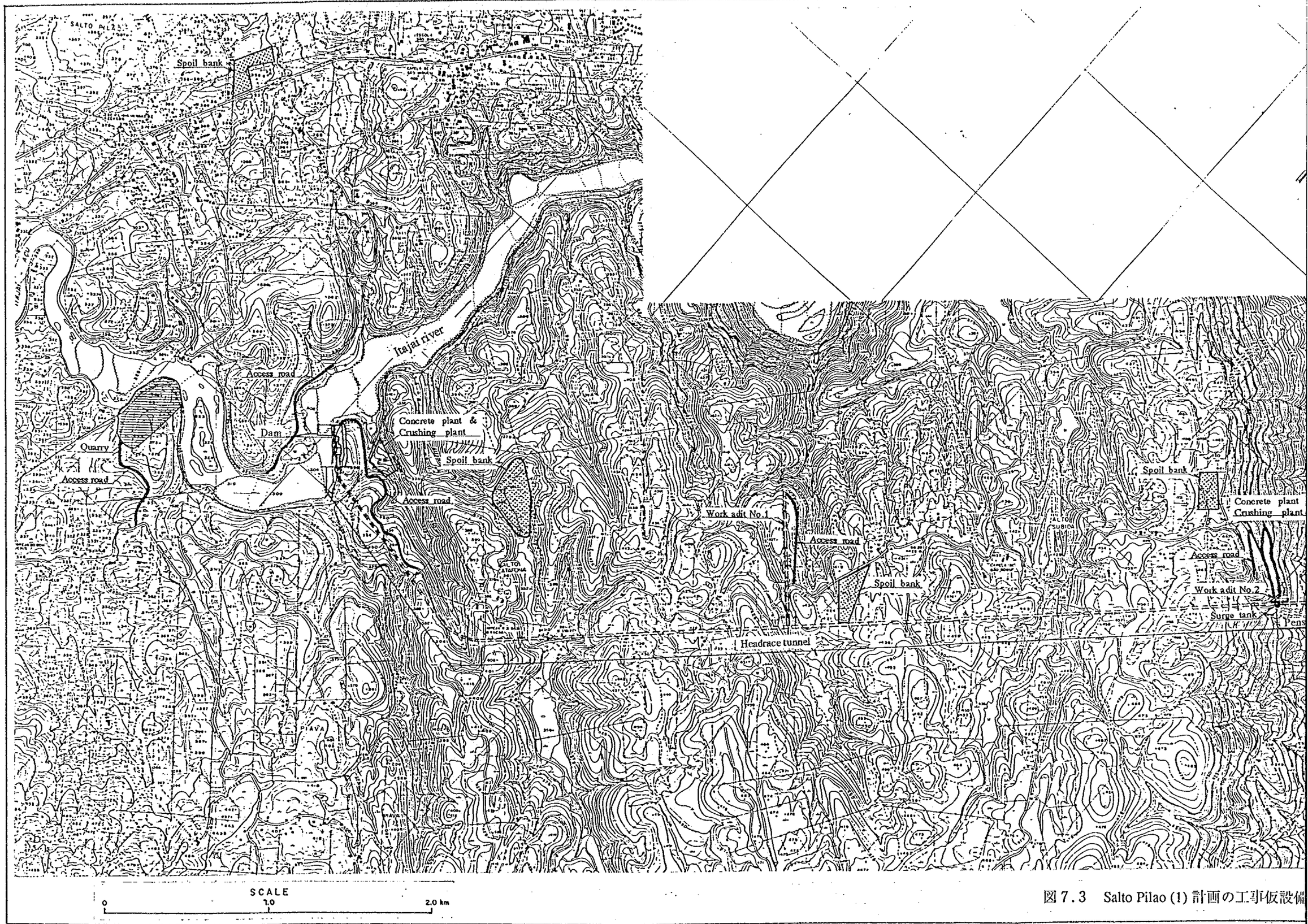

図 7.3　Salto Pilao (1) 計画の工事仮設備

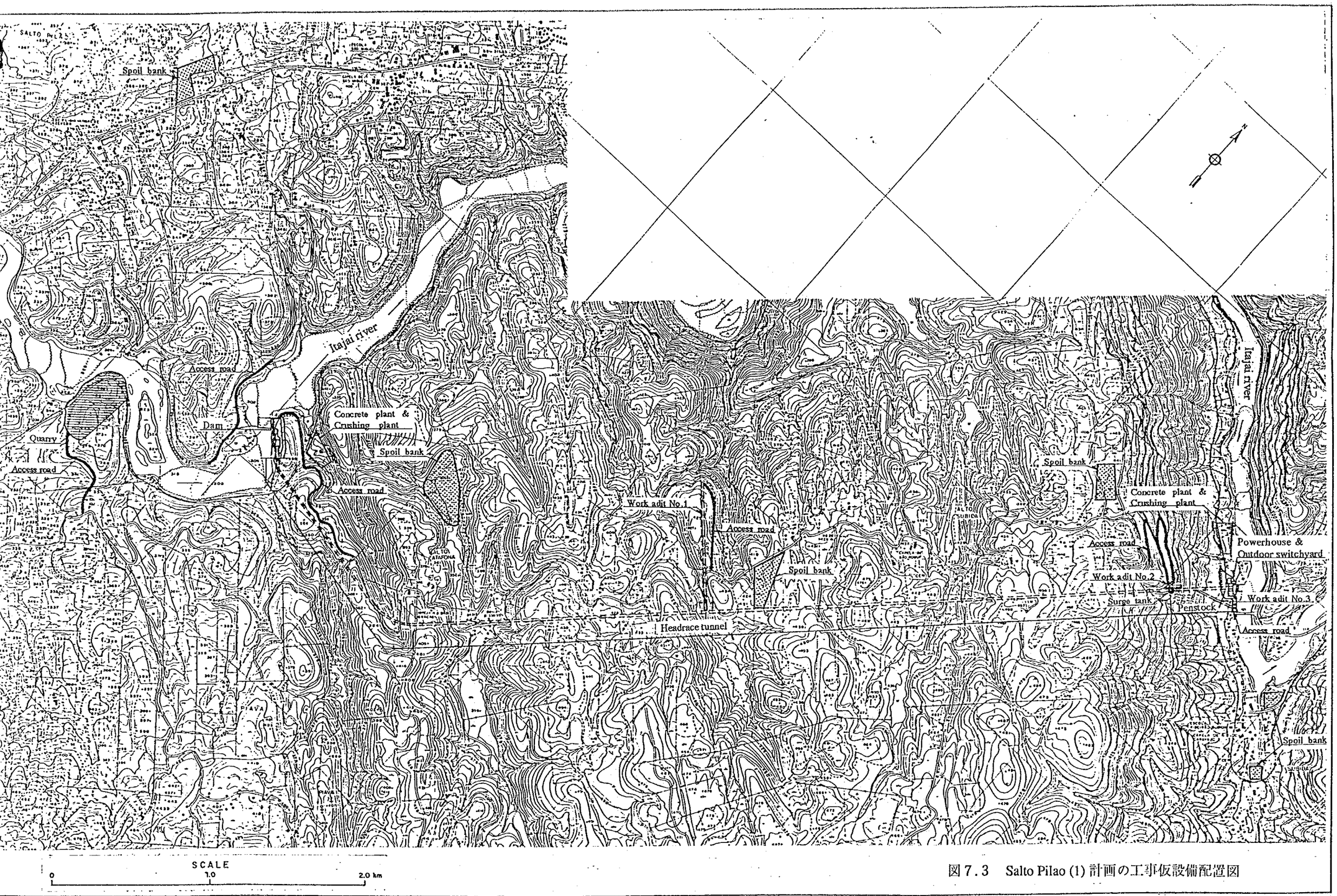

図 7.3　Salto Pilao (1) 計画の工事仮設備配置図

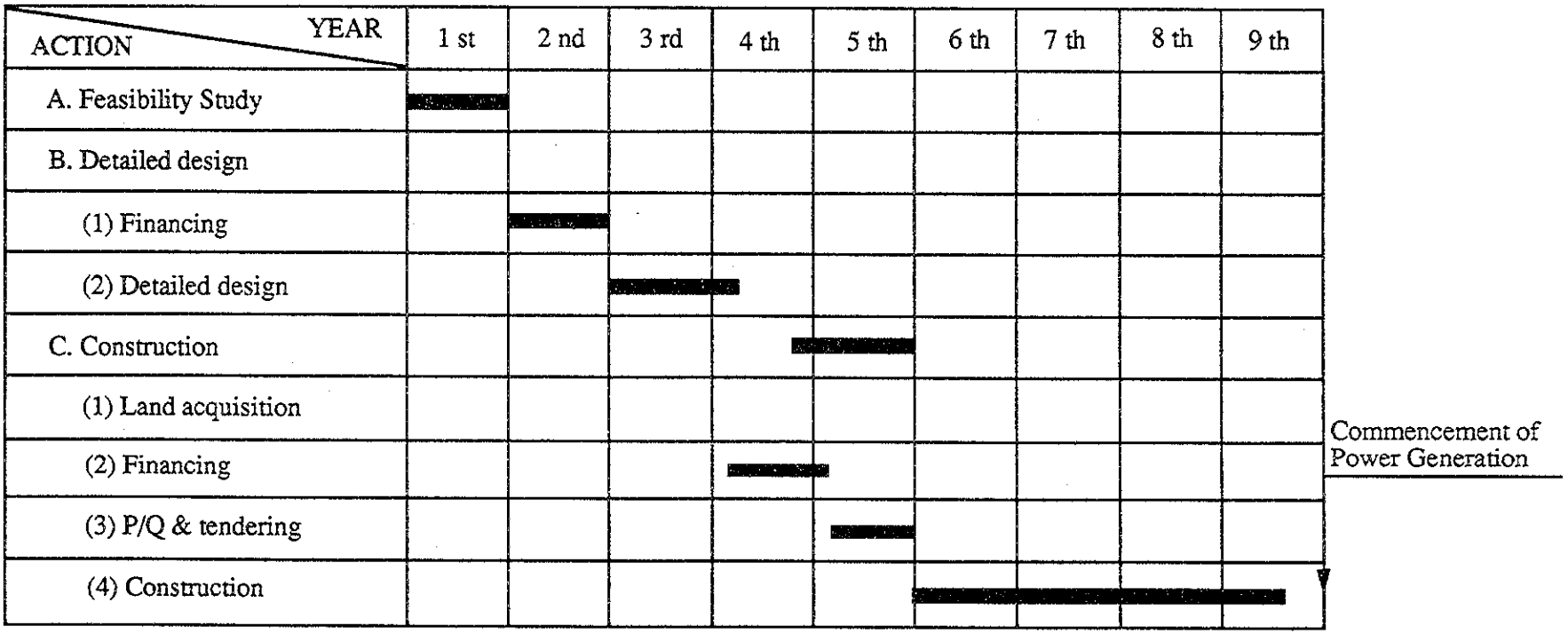

図 7.4　Dalbergia 計画の実施計画

Description	Unit	Quantity
1. Preparatory Works		
2. River Diversion		
a. Diversion tunnel	m	155
b. Coffering	m^3	18,700 (Secondary)
3. Dam and Spillway		
a. Excavation	m^3	369,000
b. Grouting	m	8,460
c. Concrete	m^3	113,500
d. Installation of gates	t	680
4. Intake		
a. Excavation	m^3	91,000
b. Concrete	m^3	9,200
c. Installation of gates	t	60
5. Headrace Tunnel		
a. Excavation	m^3	149,000
b. Concrete	m^3	35,900
6. Surge Tank		
a. Excavation	m^3	54,200
b. Concrete	m^3	3,370
7. Penstock		
a. Excavation	m^3	41,900
b. Installation of penstock pipe	m	520
c. Concrete	m^3	3,350
8. Powerhouse and Tailrace		
- Substructure and Tailrace		
a. Excavation	m^3	30,000
b. Concrete	m^3	15,300
- Superstructure		
9. Switchyard		
10. Installation of Generating		2 Units
Equipment and Testing		
11. Transmission Line	Km	2

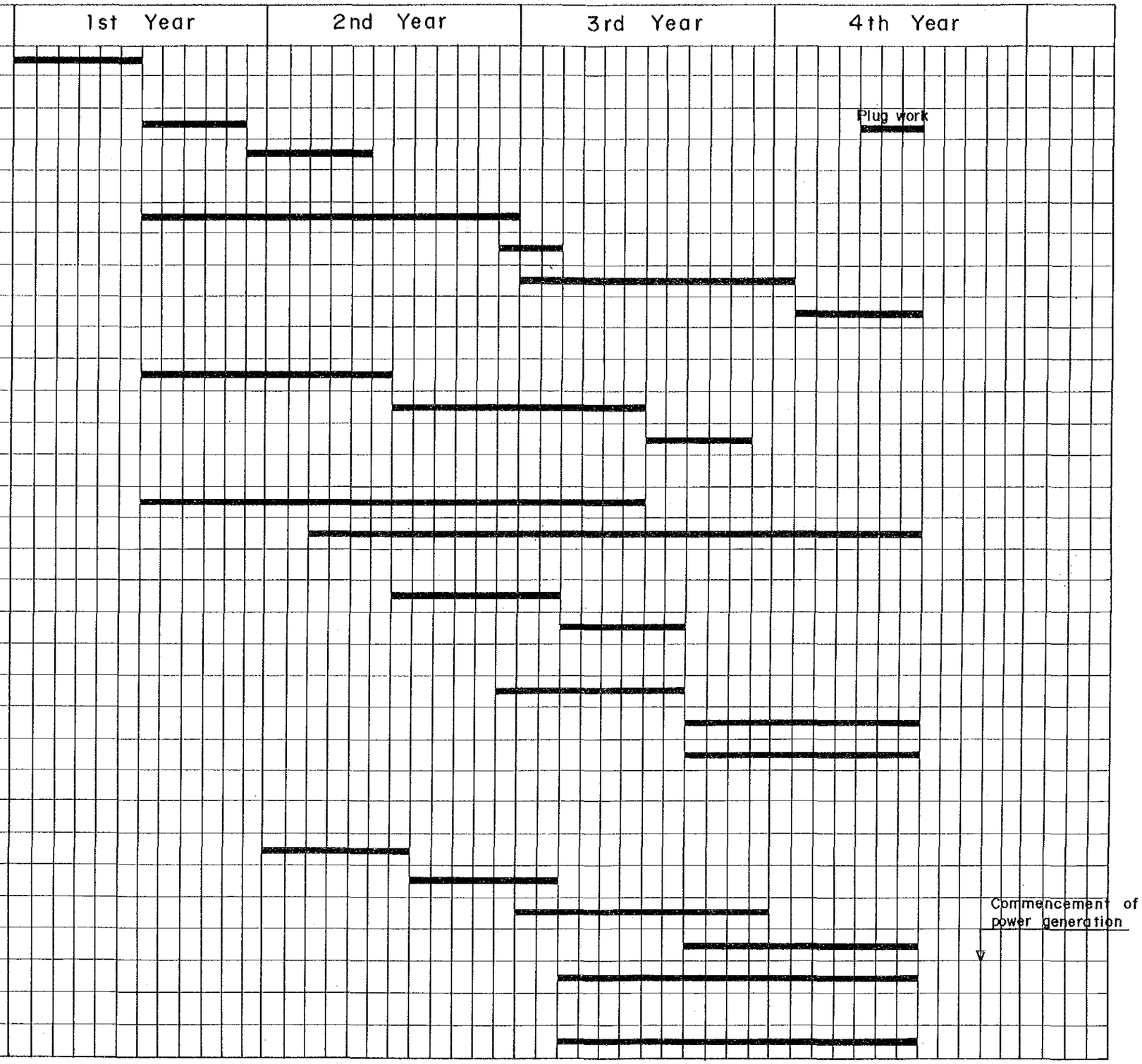

図 7.5 Dalbergia 計画の工事工程計画

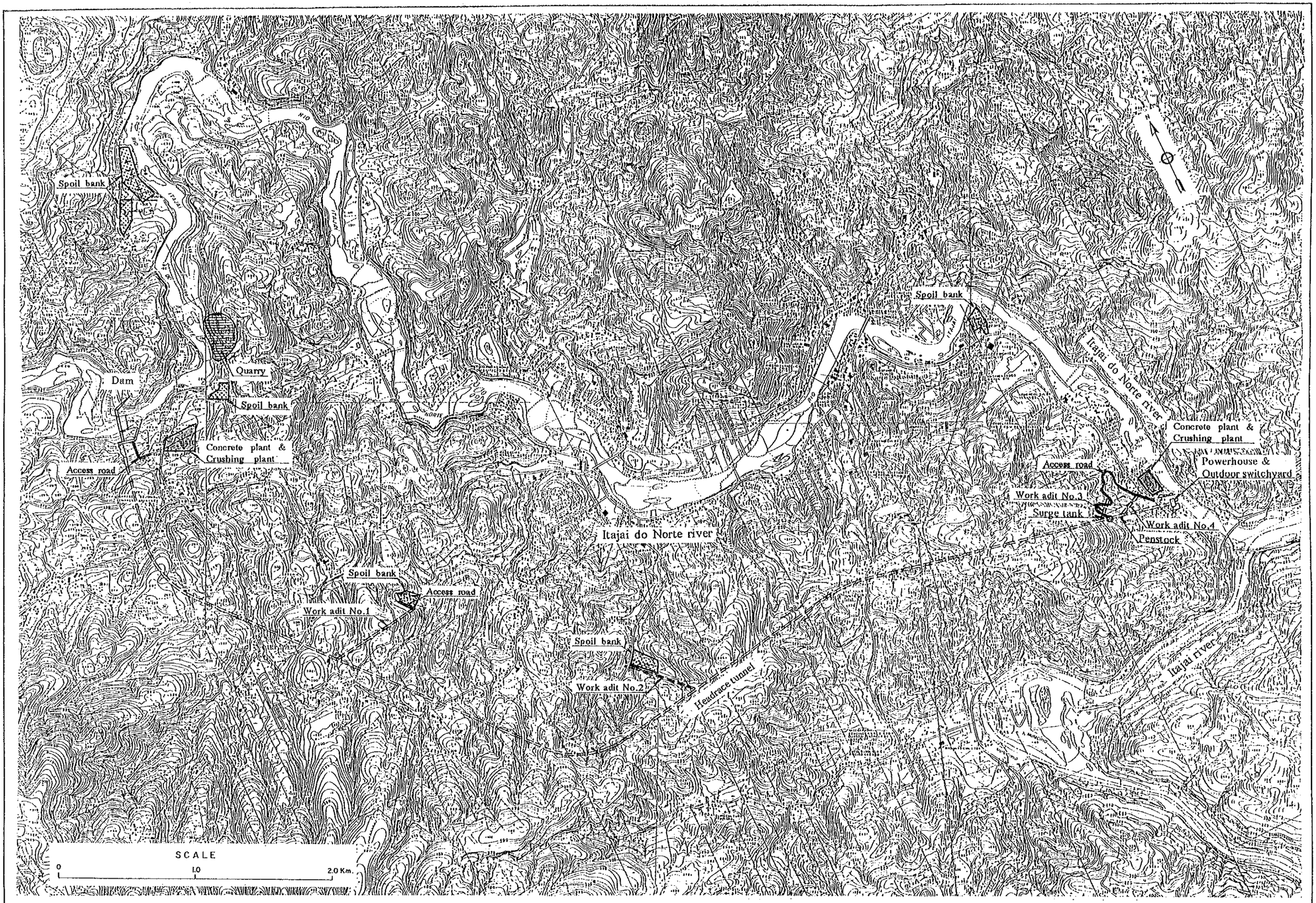

図7.6　Dalbergia 計画の工事仮設備配置図

ACTION \ YEAR	2003	2004	2005	2006	2007	2008	2009	2010
A. Feasibility Study	■							
B. Detailed design								
(1) Financing		■						
(2) Detailed design			■					
C. Construction								
(1) Land acquisition					■			
(2) Financing				■				
(3) P/Q & tendering					■			
(4) Construction						■	■	■

Commencement of Power Generation

図７．７　Benedito Novo 計画の実施計画

Description	Unit	Quantity
1. Preparatory Works		
2. River Diversion		
a. Diversion tunnel	m	155
b. Coffering	m^3	3,930 (Secondary)
3. Dam and Spillway		
a. Excavation	m^3	69,000
b. Grouting	m	1,900
c. Concrete	m^3	53, 100
d. Installation of gates	t	650
4. Intake		
a. Excavation	m^3	115,000
b. Concrete	m^3	21,400
c. Installation of gates	t	120
5. Headrace Tunnel		
a. Excavation	m^3	21,500
b. Concrete	m^3	6, 100
6. Surge Tank		
a. Excavation	m^3	29, 600
b. Concrete	m^3	1, 100
7. Penstock		
a. Excavation	m^3	16,000
b. Installation of penstock pipe	m	450
c. Concrete	m^3	2,400
8. Powerhouse and Tailrace		
- Substructure and Tailrace		
a. Excavation	m^3	14,000
b. Concrete	m^3	10,300
- Superstructure		
9. Switchyard		
10. Installation of Generating		2 Units
Equipment and Testing		
11. Transmission Line	Km	17

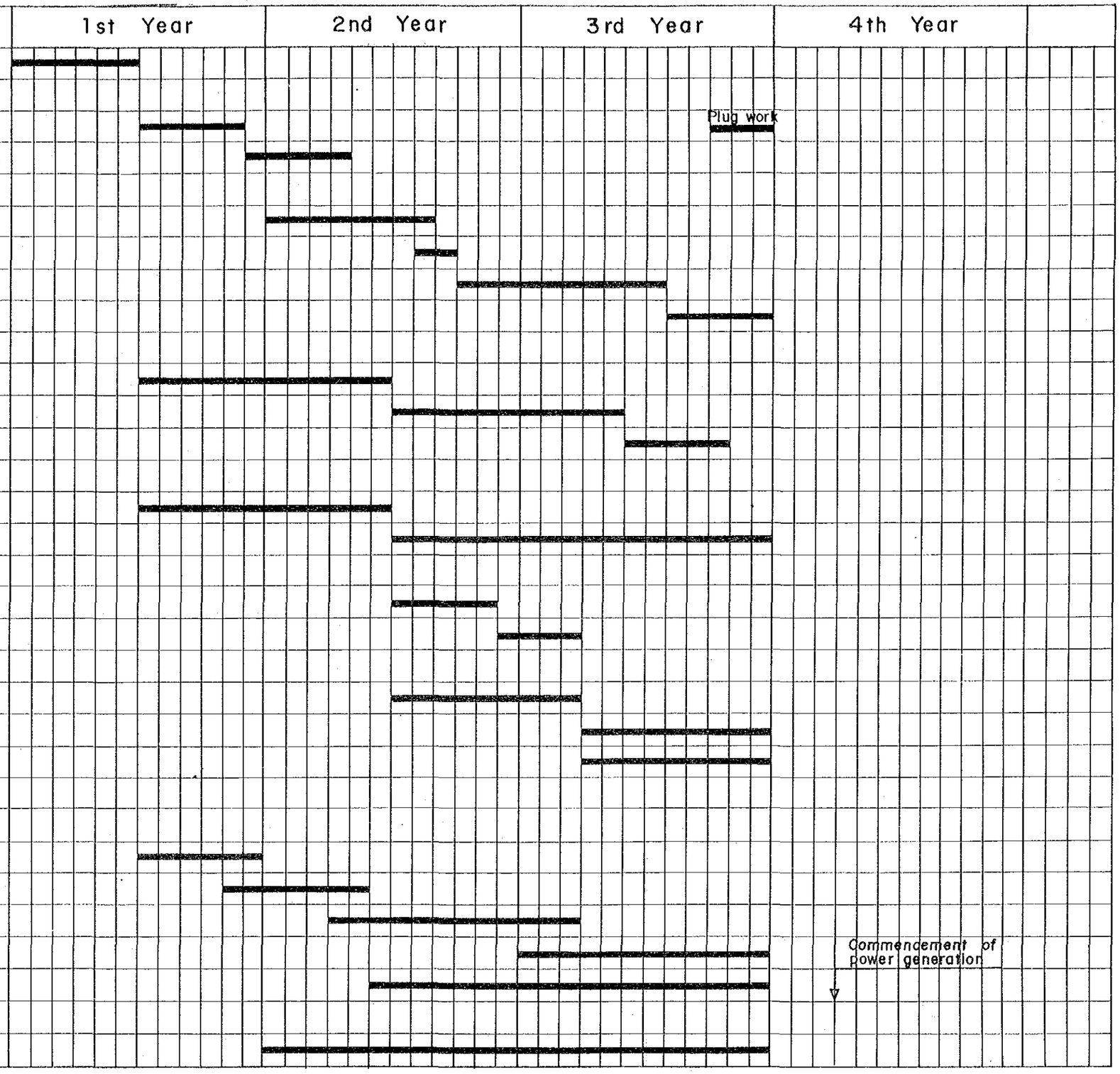

図 7.8　Benedito Novo 計画の工事工程計画

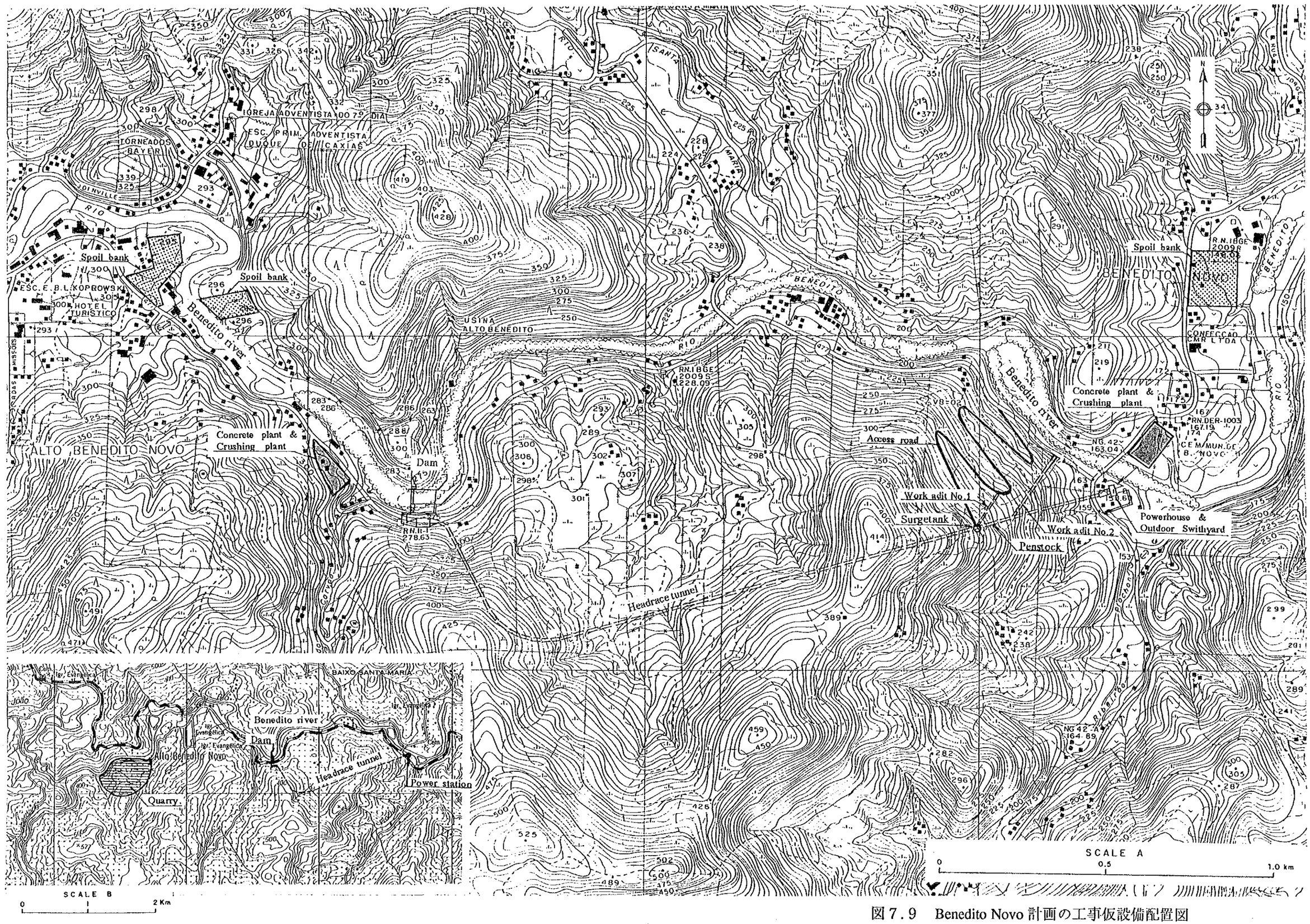

図 7．9　Benedito Novo 計画の工事仮設備配置図

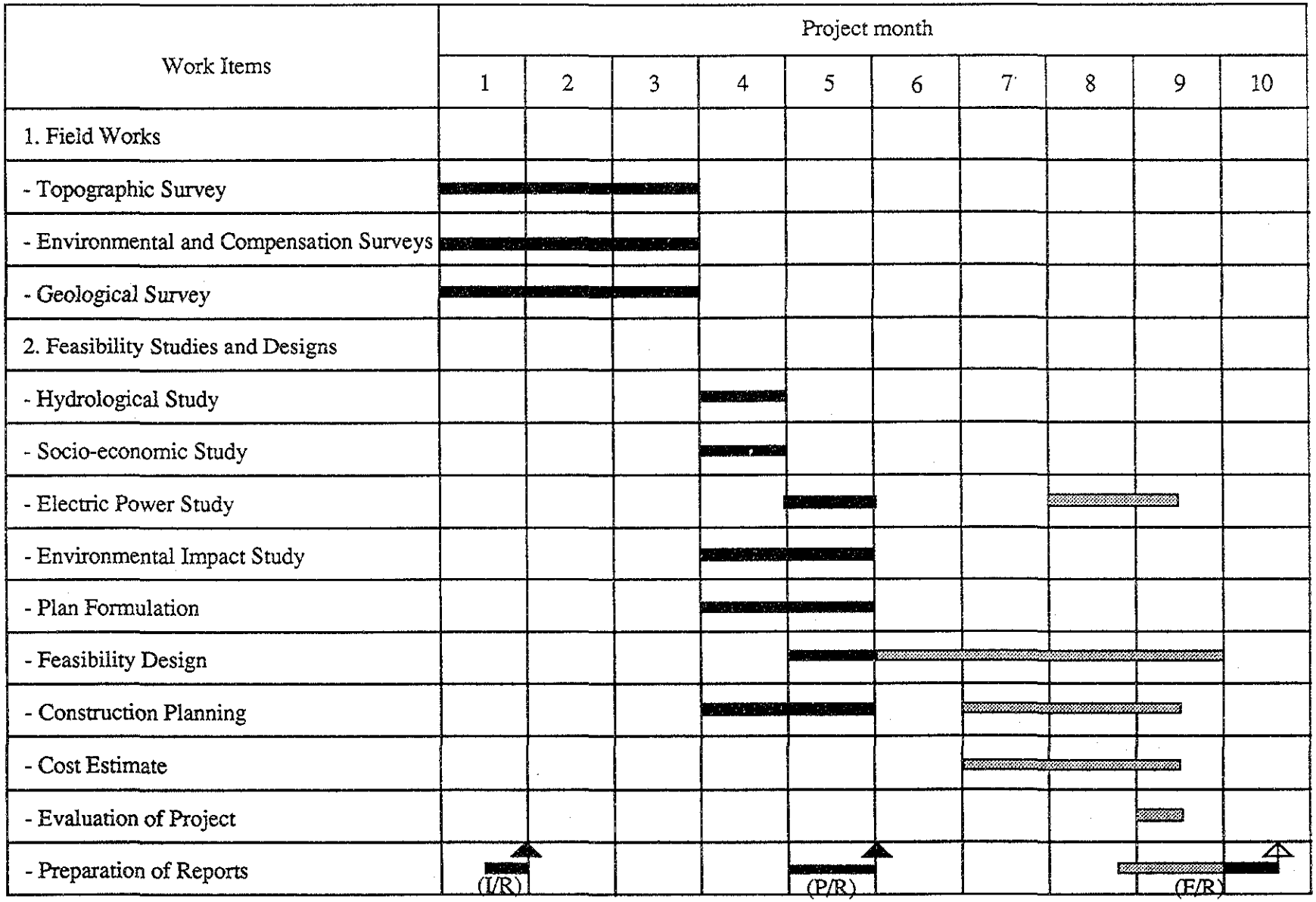

図１０.１　Salto Pilao 計画の F/S作業工程計画

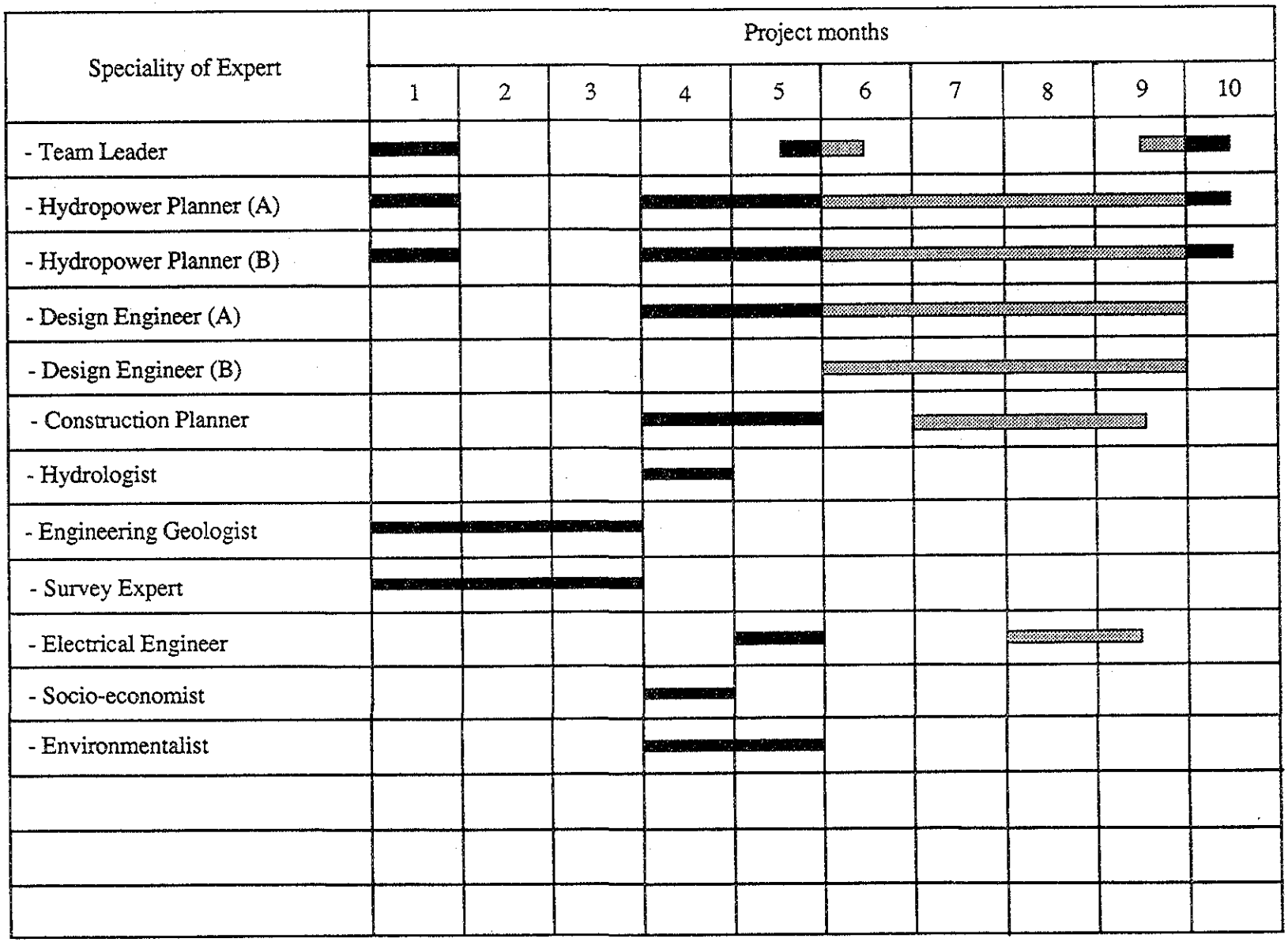

図１０.２　JICA 調査団要員計画