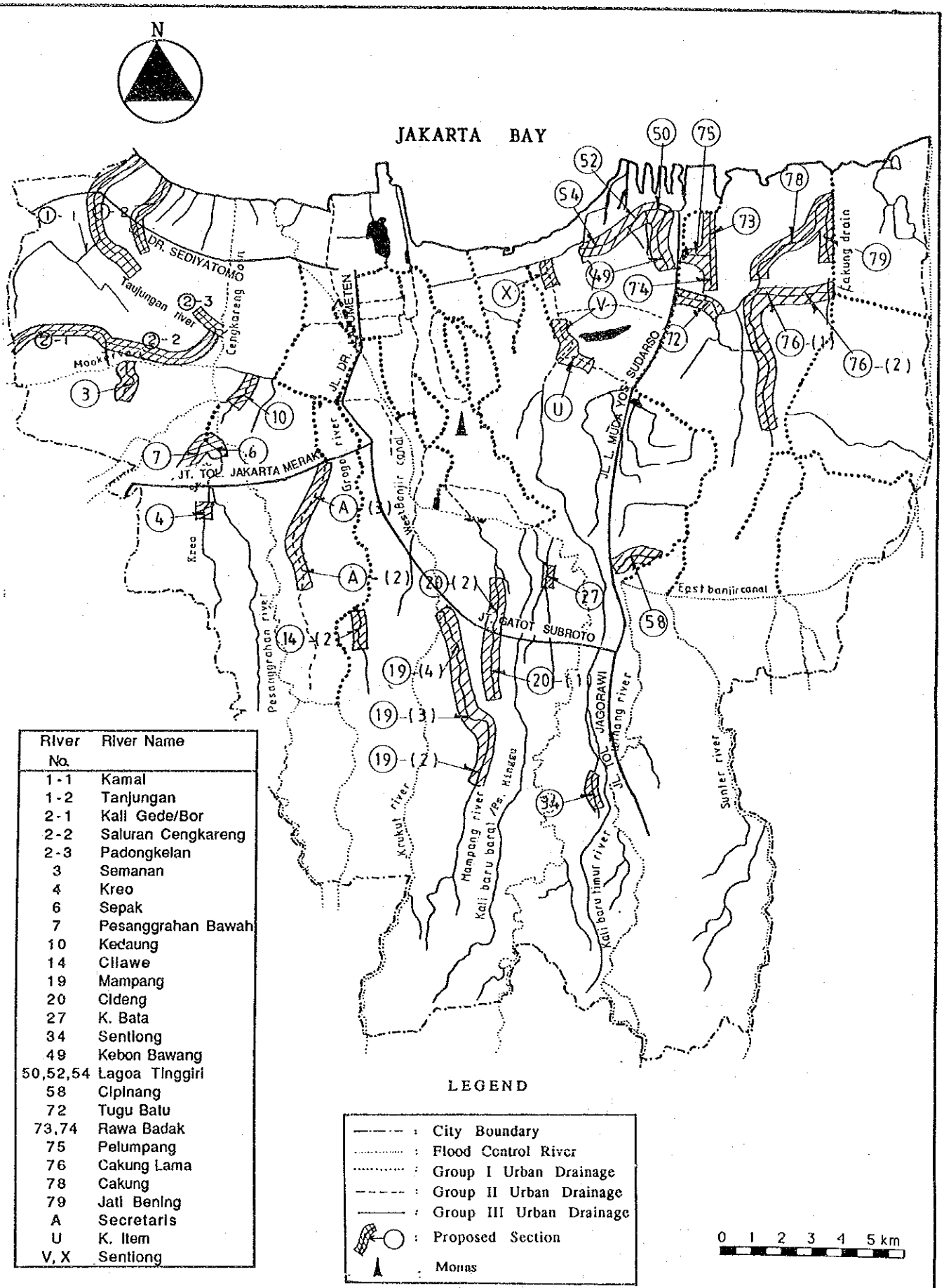

River No.	River Name
1-1	Kamal
1-2	Tanjungan
2-1	Kali Gede/Bor
2-2	Saluran Cengkareng
2-3	Padongkelan
3	Semanan
4	Kreo
6	Sepak
7	Pesanggrahan Bawah
10	Kedaung
14	Cilawe
19	Mampang
20	Cideng
27	K. Bata
34	Sentiong
49	Kebon Bawang
50,52,54	Lagoa Tinggiri
58	Cipinang
72	Tugu Batu
73,74	Rawa Badak
75	Pelumpang
76	Cakung Lama
78	Cakung
79	Jati Bening
A	Secretaris
U	K. Item
V, X	Sentiong

FIG. G.6 LOCATION MAP OF INSUFFICIENT FLOW CAPACITY CHANNEL

THE STUDY ON URBAN DRAINAGE AND WASTE WATER DISPOSAL PROJECT IN THE CITY OF JAKARTA

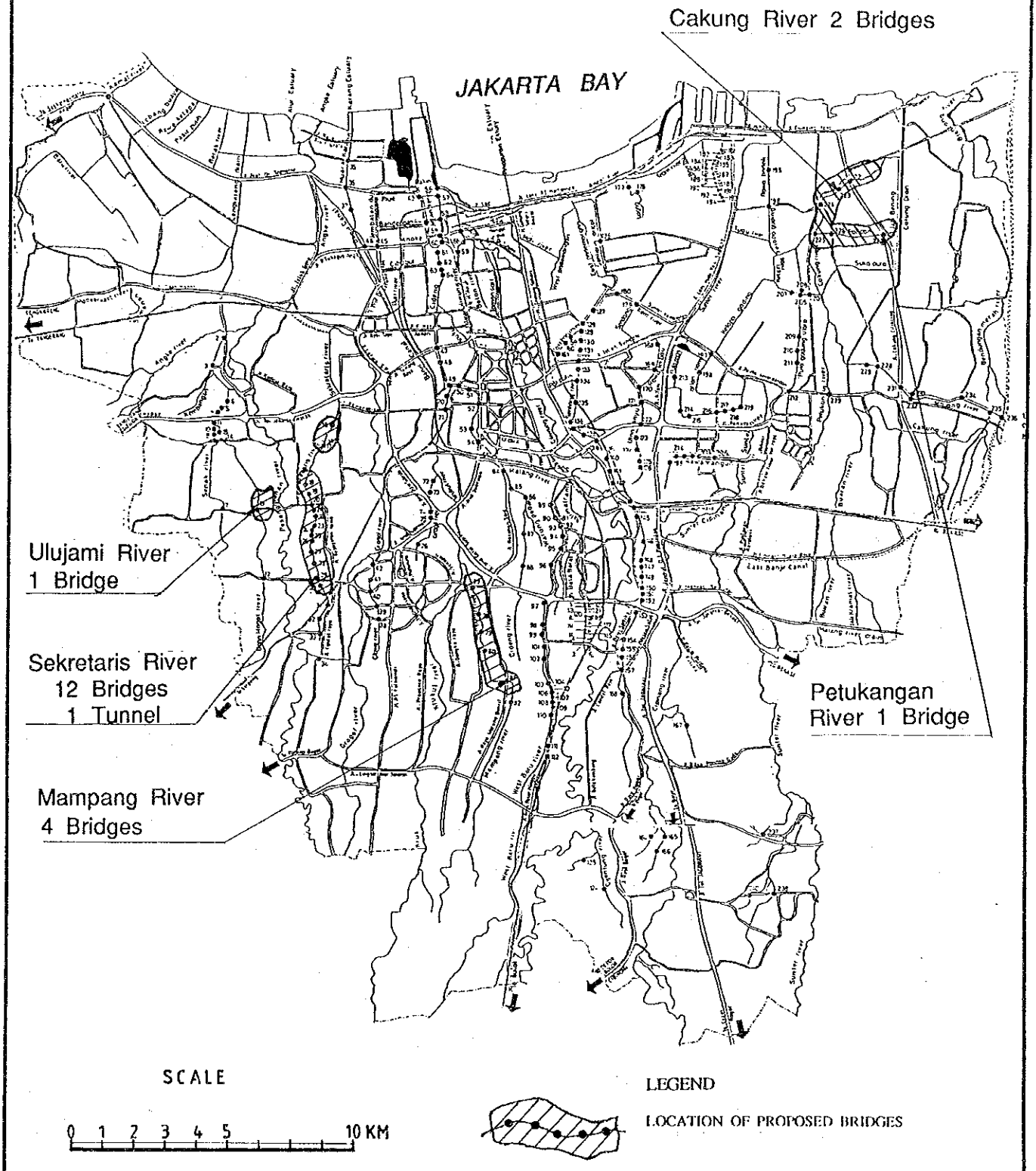

FIG. G.7 LOCATION MAP OF BRIDGE IMPROVEMENT

THE STUDY ON URBAN DRAINAGE AND WASTE WATER DISPOSAL PROJECT IN THE CITY OF JAKARTA

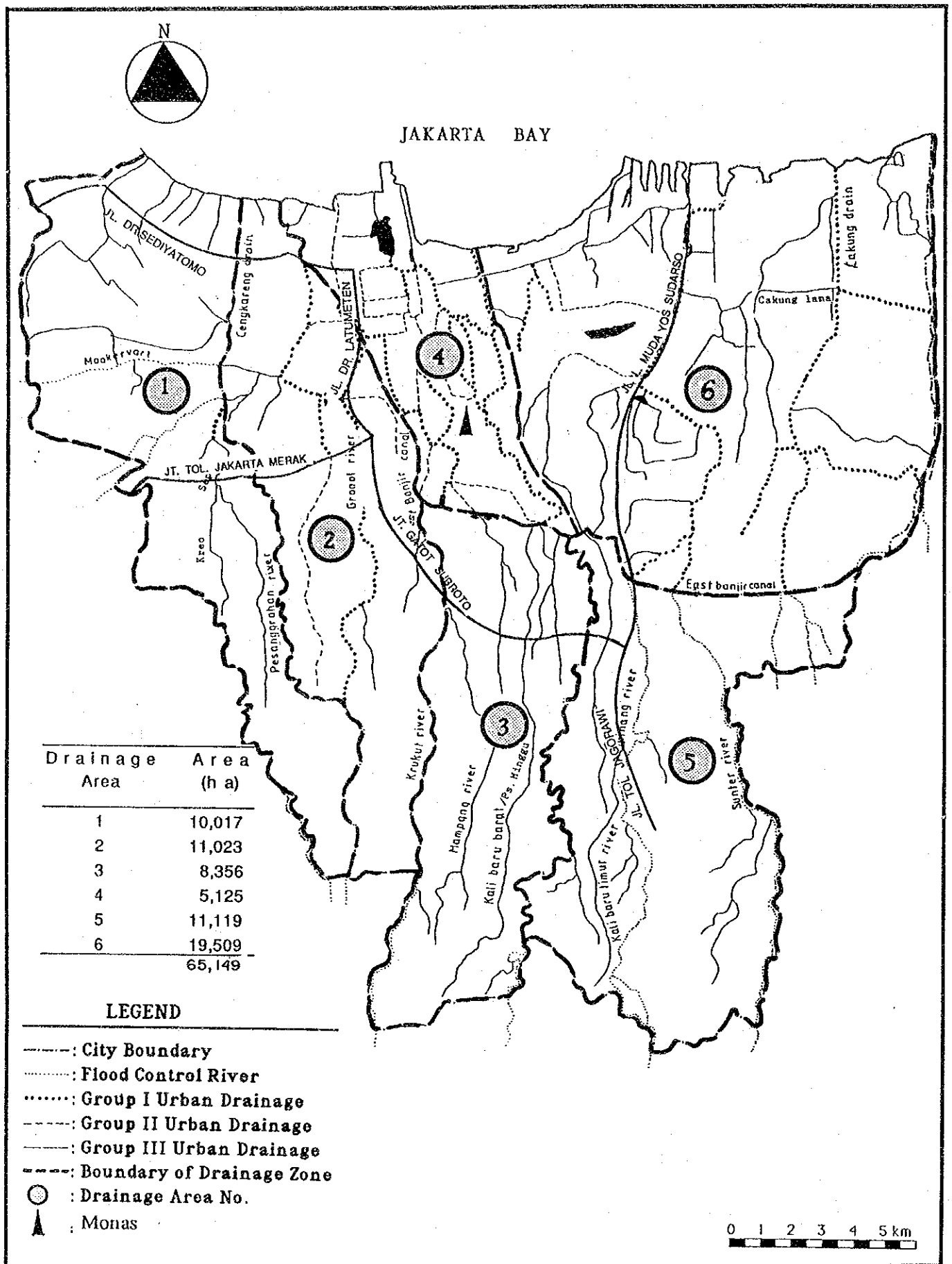

Drainage Area	Area (h a)
1	10,017
2	11,023
3	8,356
4	5,125
5	11,119
6	19,509
	65,149

FIG. G.8 DIVIDED DRAINAGE ZONE IN PROJECT AREA

THE STUDY ON URBAN DRAINAGE AND WASTE WATER DISPOSAL PROJECT IN THE CITY OF JAKARTA

JICA A.D 1991

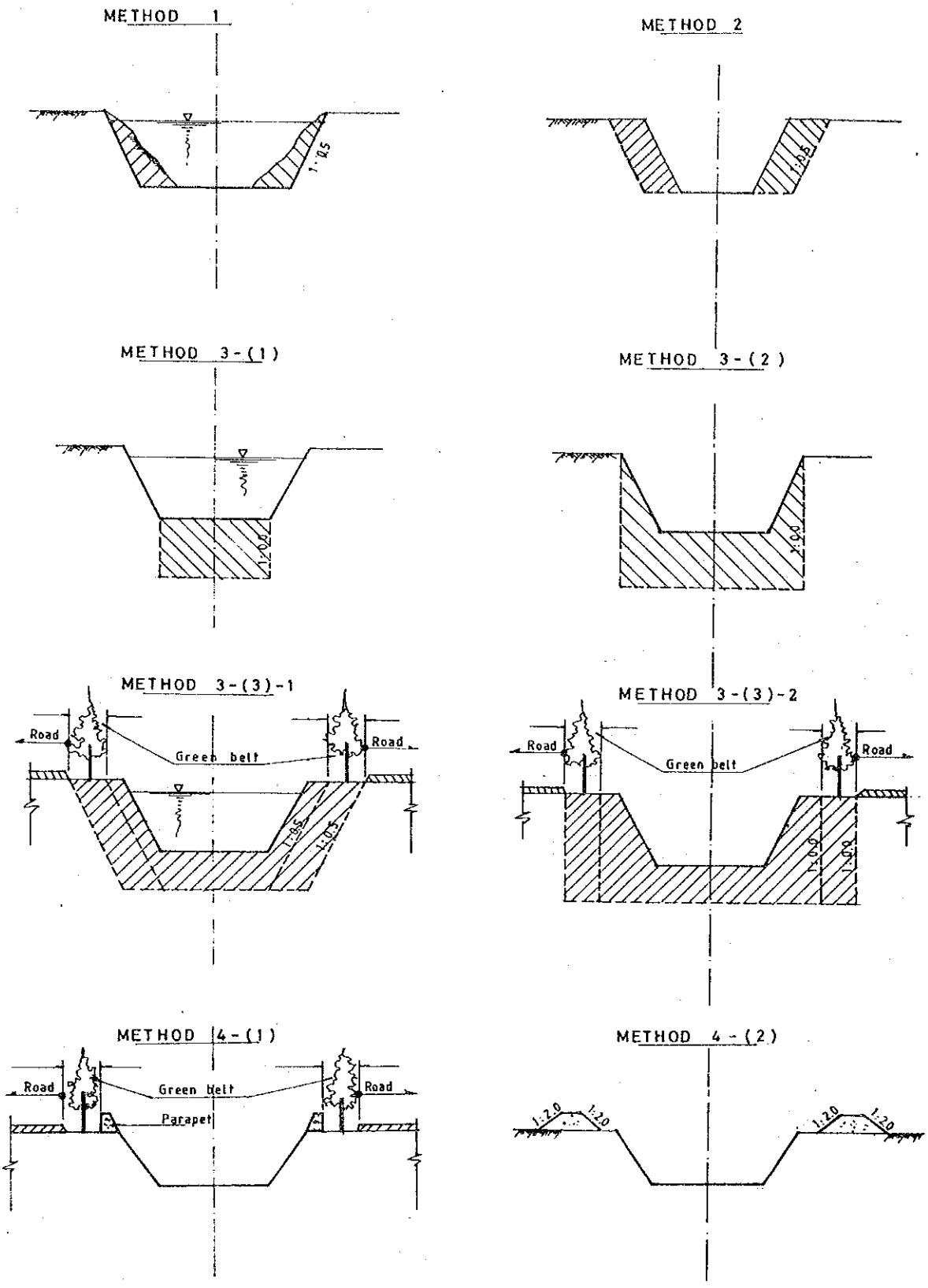

FIG. G.9 PROPOSED IMPROVEMENT METHOD OF EXISTING CHANNELS

THE STUDY ON URBAN DRAINAGE AND WASTE WATER DISPOSAL PROJECT IN THE CITY OF JAKARTA

(a). Embankment

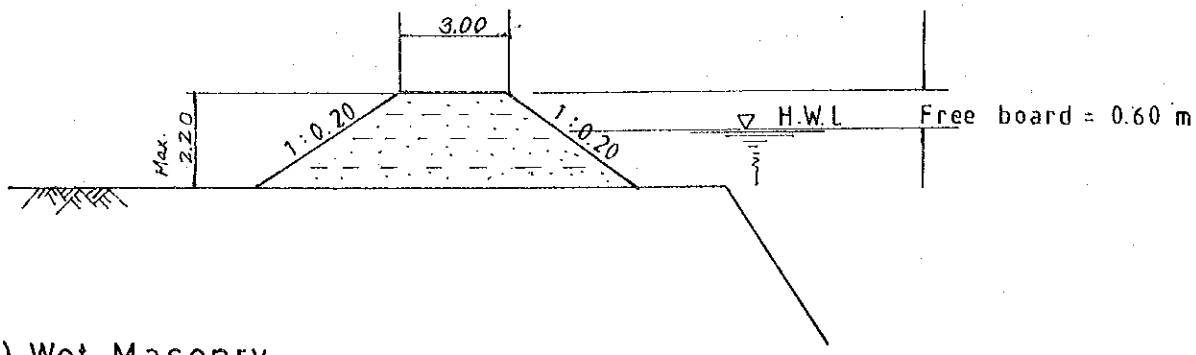

(b). Wet Masonry

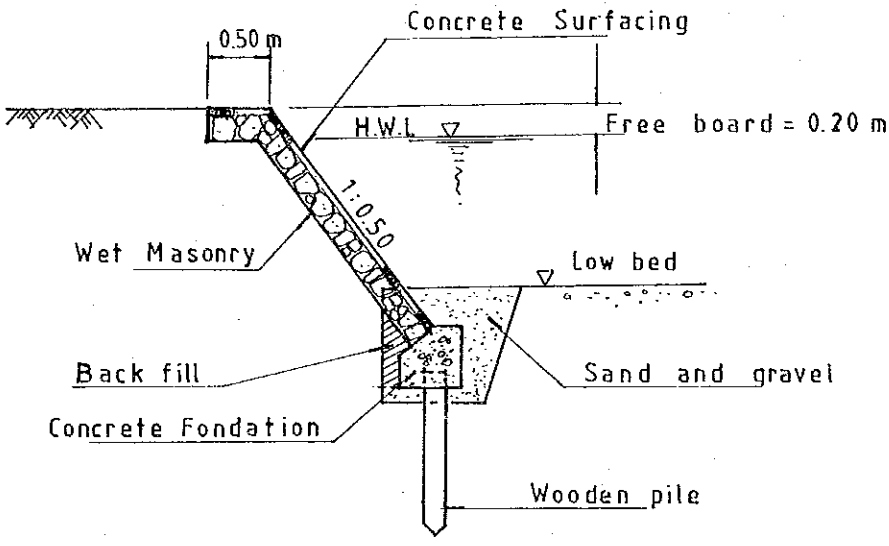

(c). Concrete Pile Wall

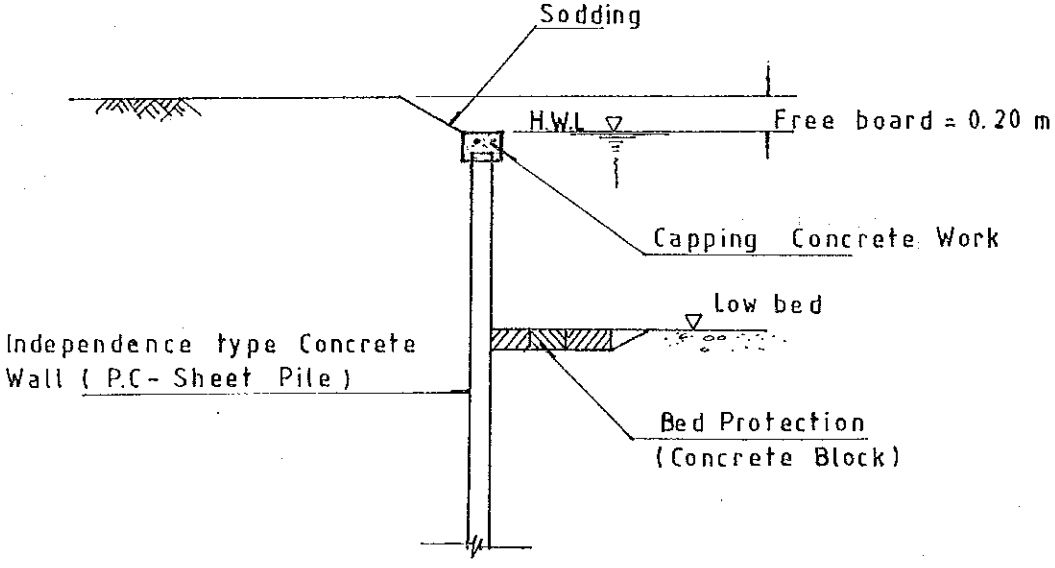

FIG. G.10 PROPOSED REVETMENT METHOD

THE STUDY ON URBAN DRAINAGE AND WASTE WATER DISPOSAL PROJECT IN THE CITY OF JAKARTA

(a) Embankment

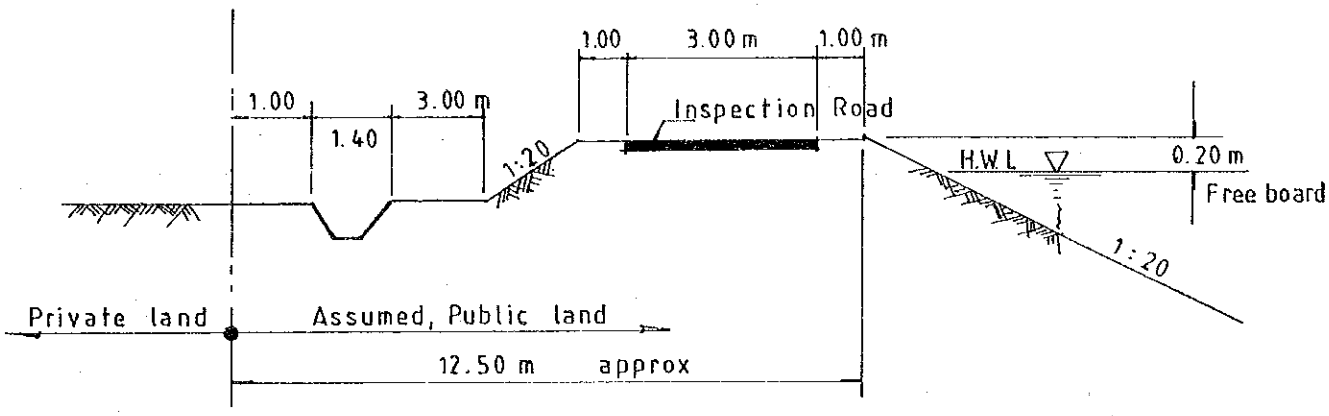

(b) Excavated Channel

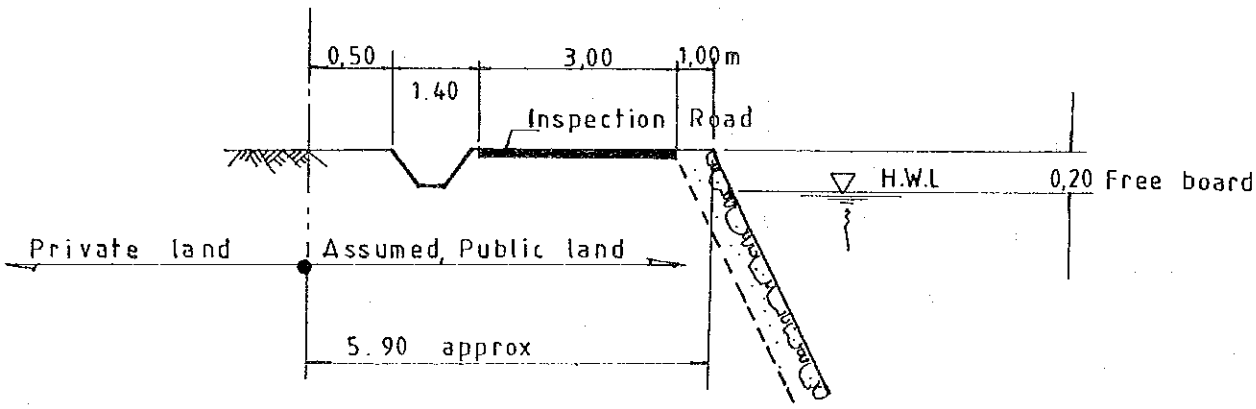

FIG. G.11	PROPOSED TYPICAL SECTION OF INSPECTION ROAD

THE STUDY ON URBAN DRAINAGE AND WASTE WATER DISPOSAL PROJECT IN THE CITY OF JAKARTA

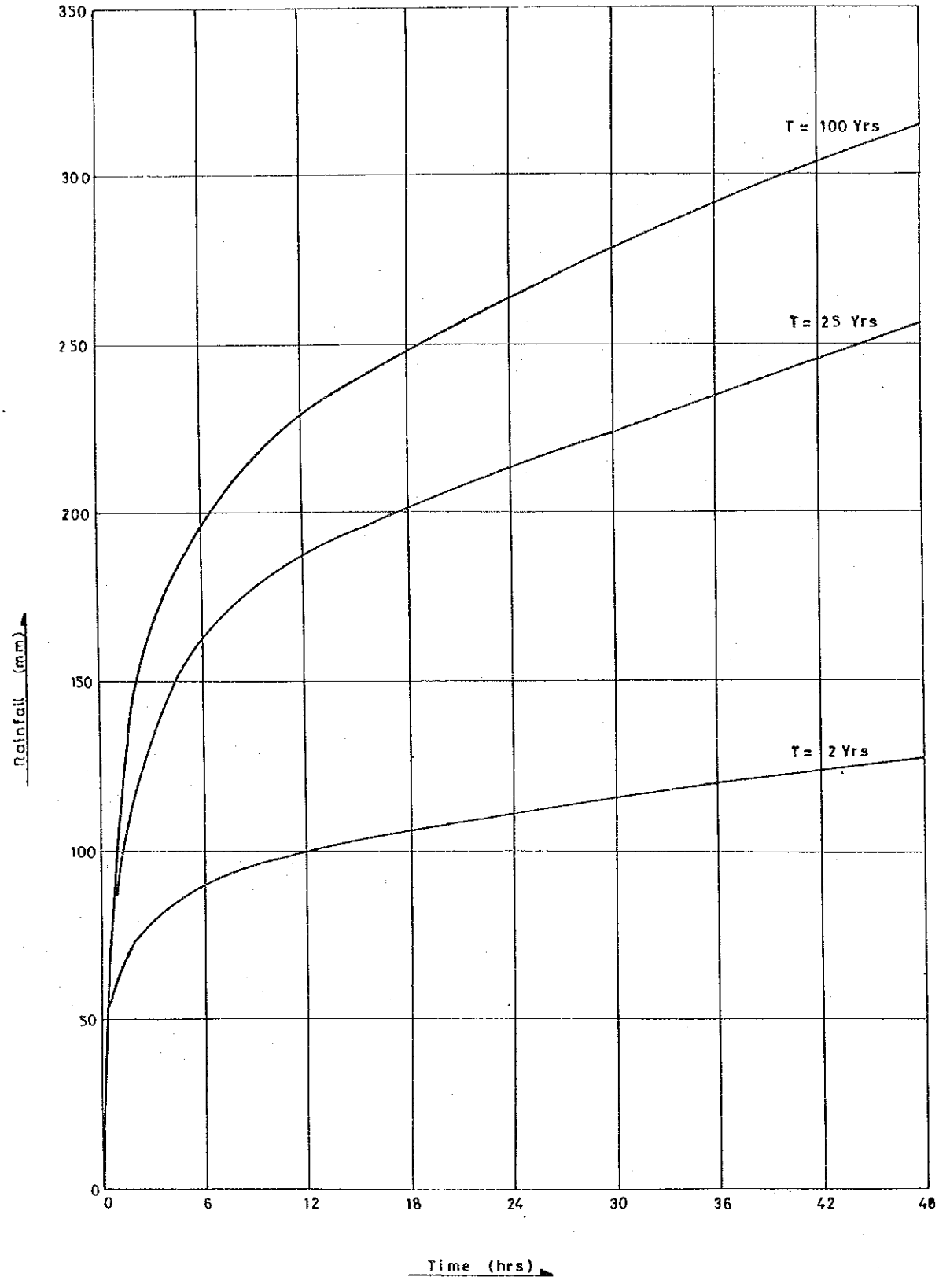

FIG. G.12 POINT RAINFALL MASSCURVE

THE STUDY ON URBAN DRAINAGE AND WASTE WATER DISPOSAL PROJECT IN THE CITY OF JAKARTA

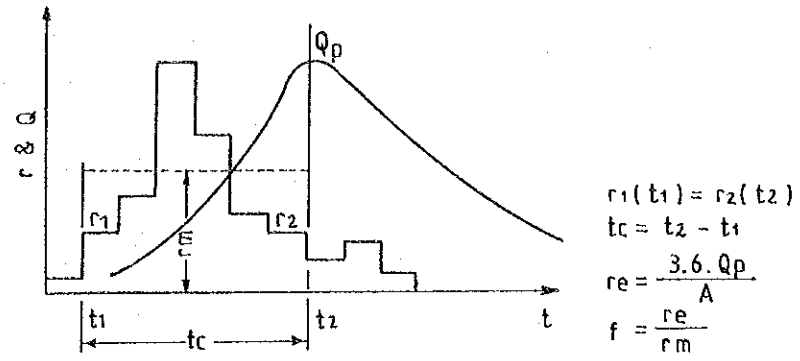

$r_1(t_1) = r_2(t_2)$

$tc = t_2 - t_1$

$re = \frac{3.6 \cdot Qp}{A}$

$f = \frac{re}{rm}$

Relationship between tc and f

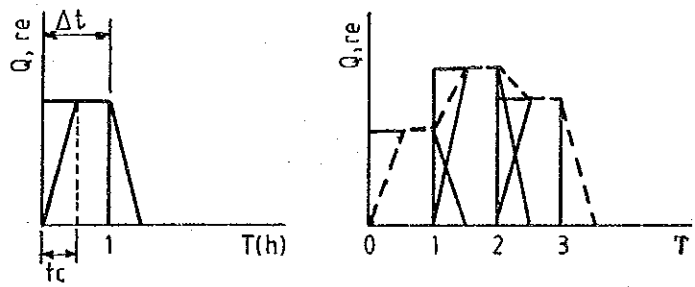

in case of ($tc < \Delta t$)

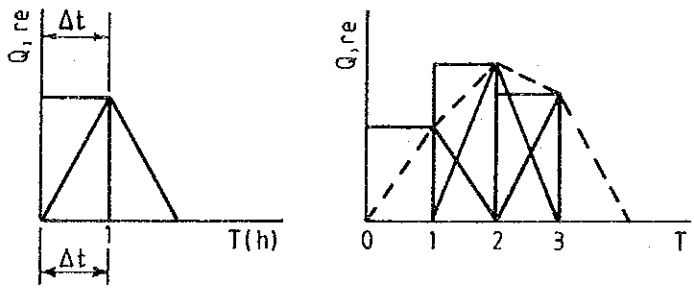

in case of ($tc = \Delta t$)

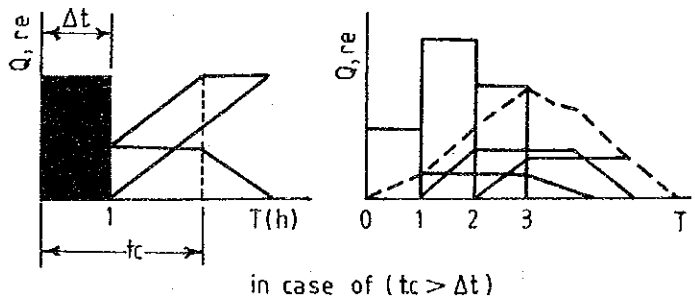

in case of ($tc > \Delta t$)

Legend

tc : concentration time (hr)
Δt : unit time (hr)
r : rainfall (mm)
Qp ; Peak Discharge (m^3/sec)

FIG. G.13	CALCULATION METHOD OF UNIT HYDROGRAPH

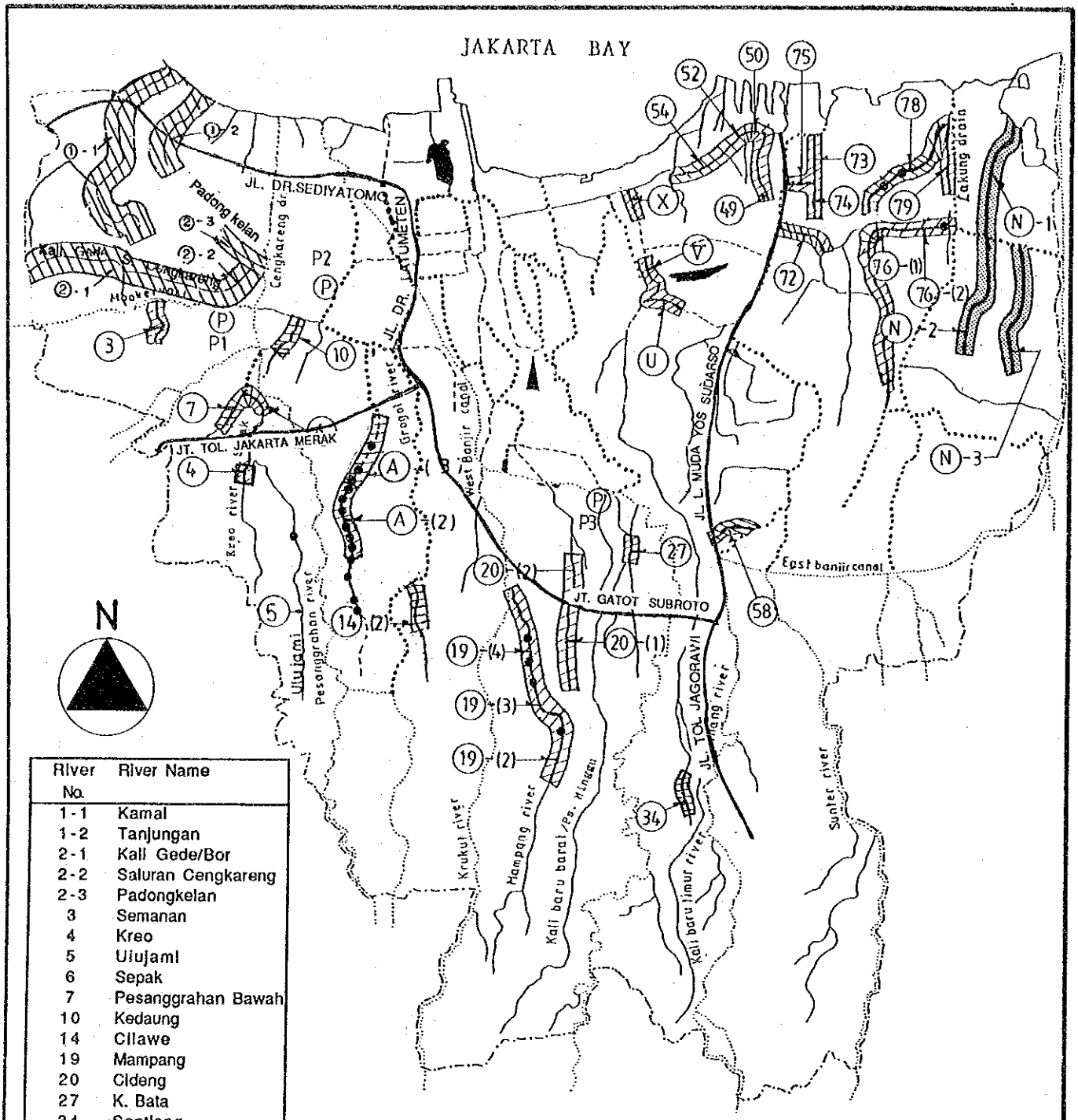

River No.	River Name
1-1	Kamal
1-2	Tanjungan
2-1	Kali Gede/Bor
2-2	Saluran Cengkareng
2-3	Padongkelan
3	Semanan
4	Kreo
5	Uiujami
6	Sepak
7	Pesanggrahan Bawah
10	Kedaung
14	Cilawe
19	Mampang
20	Cideng
27	K. Bata
34	Sentlong
49	Kebon Bawang
50,52,54	Lagoa Tinggiri
58	Cipinang
72	Tugu Batu
73,74	Rawa Badak
75	Pelumpang
76	Cakung Lama
78	Cakung
79	Jati Bening
A	Secretaris
U	K. Item
V, X	Sentlong
N-1	Lower Marunda
N-2,N-3	Upper Marunda

FIG. G.14 LOCATION OF PROPOSED DEVELOPMENT PLAN

THE STUDY ON URBAN DRAINAGE AND WASTE WATER DISPOSAL PROJECT IN THE CITY OF JAKARTA

JICA A.D 1991

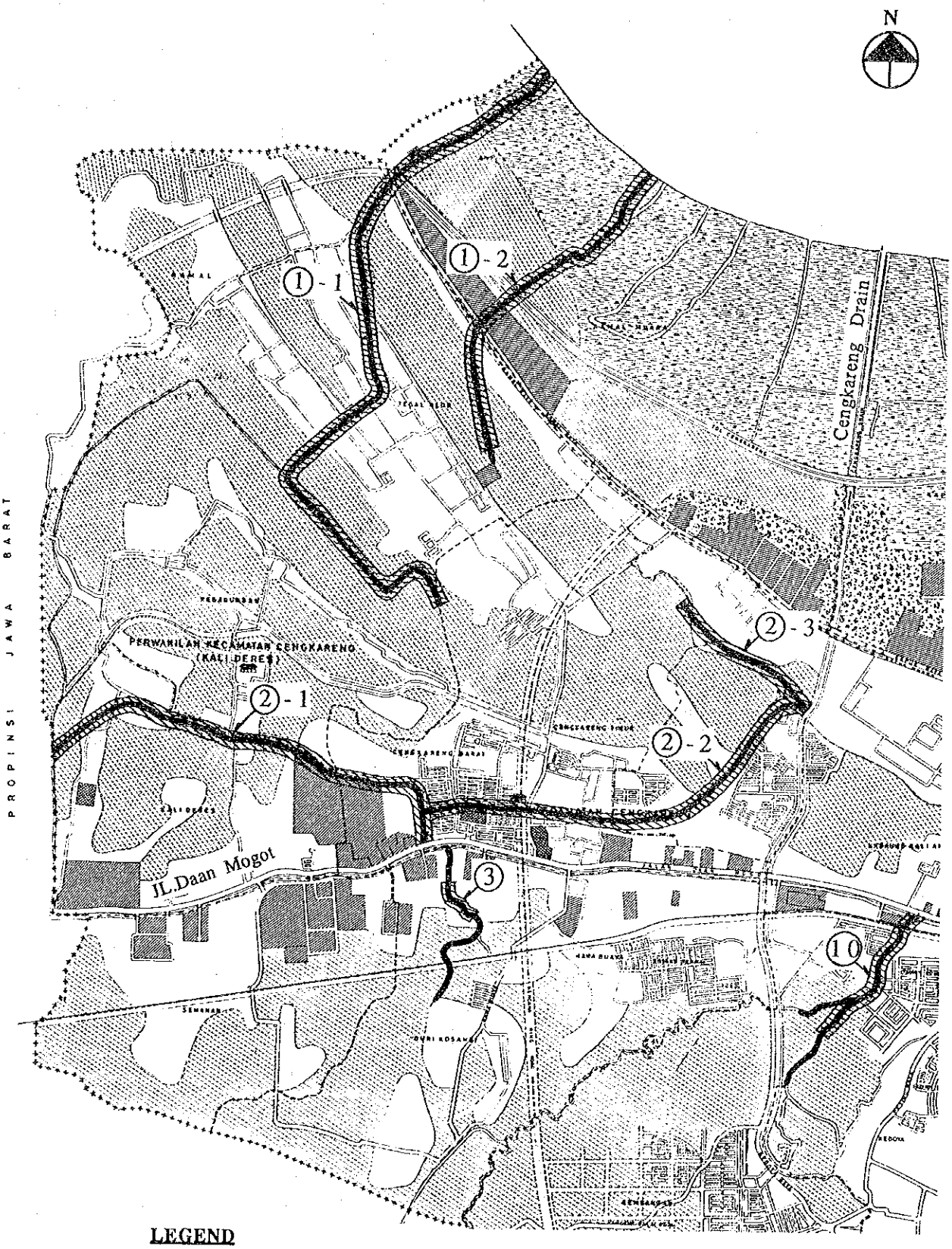

FIG. G.15 (1) LOCATION MAP OF DRAINAGE CHANNEL DEVELOPMENT PLAN

THE STUDY ON URBAN DRAINAGE AND WASTE WATER DISPOSAL PROJECT IN THE CITY OF JAKARTA

JICA A.D 1991

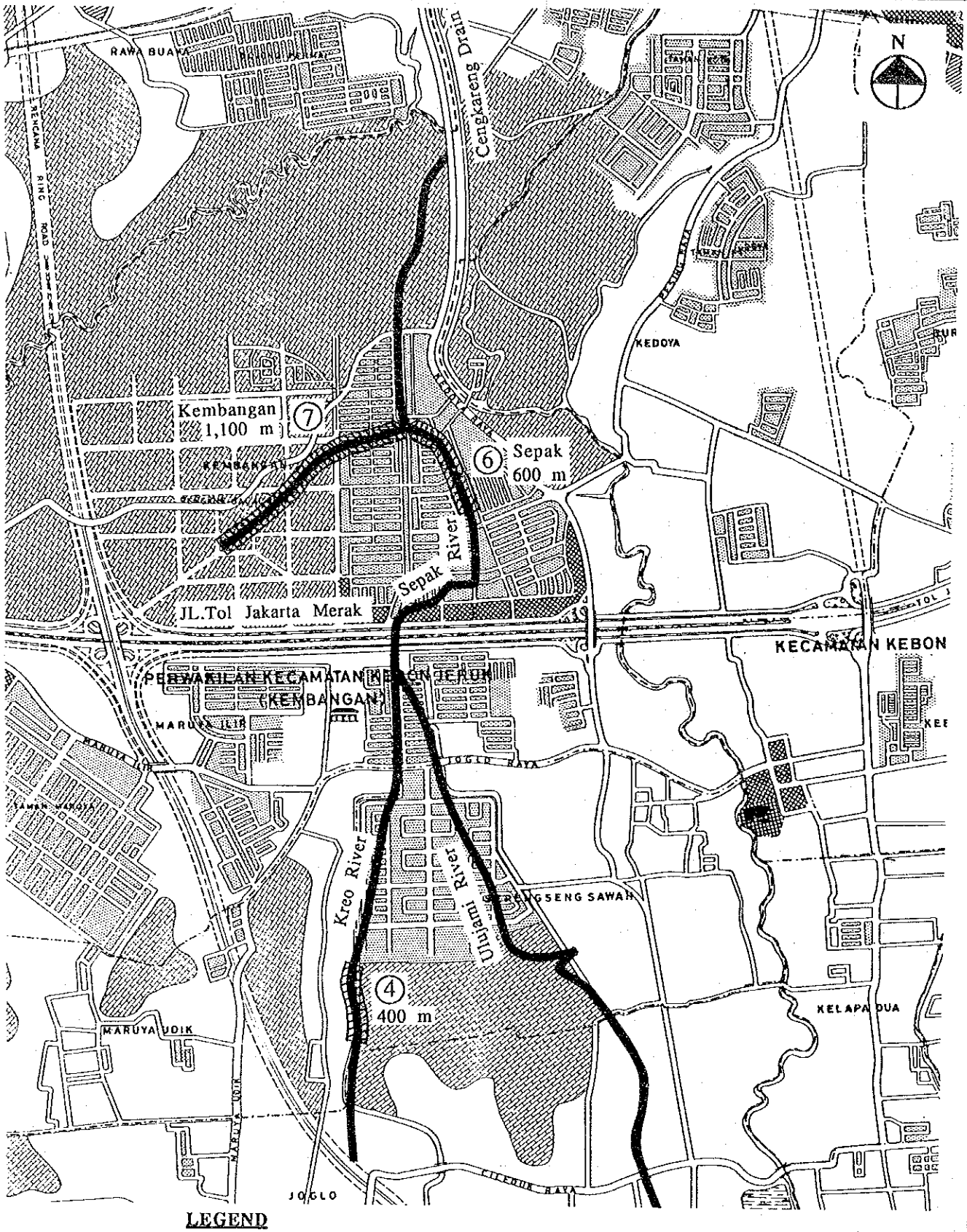

FIG. G.15 (2) LOCATION MAP OF DRAINAGE CHANNEL DEVELOPMENT PLAN

THE STUDY ON URBAN DRAINAGE AND WASTE WATER DISPOSAL PROJECT IN THE CITY OF JAKARTA

JICA A.D 1991

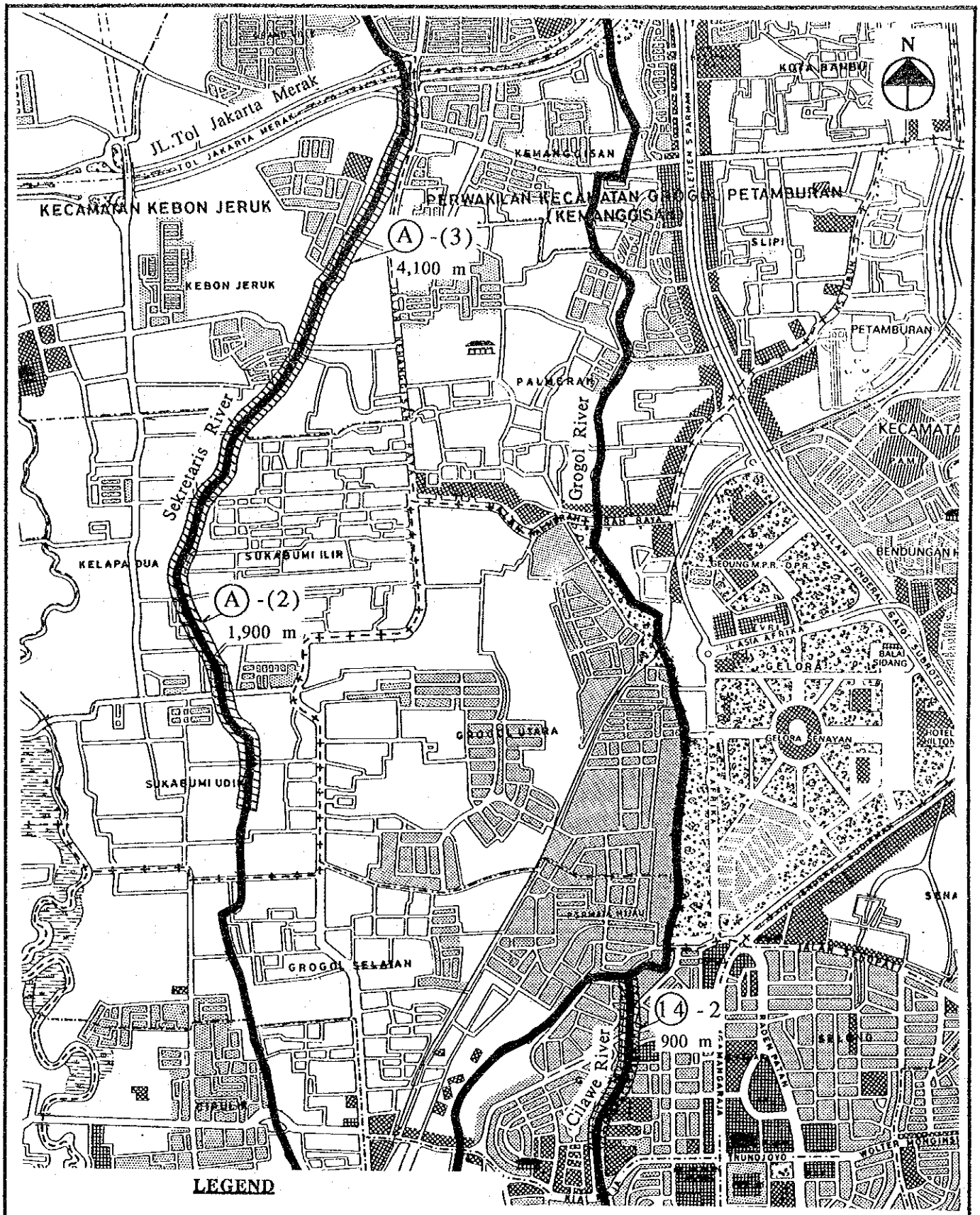

FIG. G.15 (3) LOCATION MAP OF DRAINAGE CHANNEL DEVELOPMENT PLAN

THE STUDY ON URBAN DRAINAGE AND WASTE WATER DISPOSAL PROJECT IN THE CITY OF JAKARTA

JICA A.D 1991

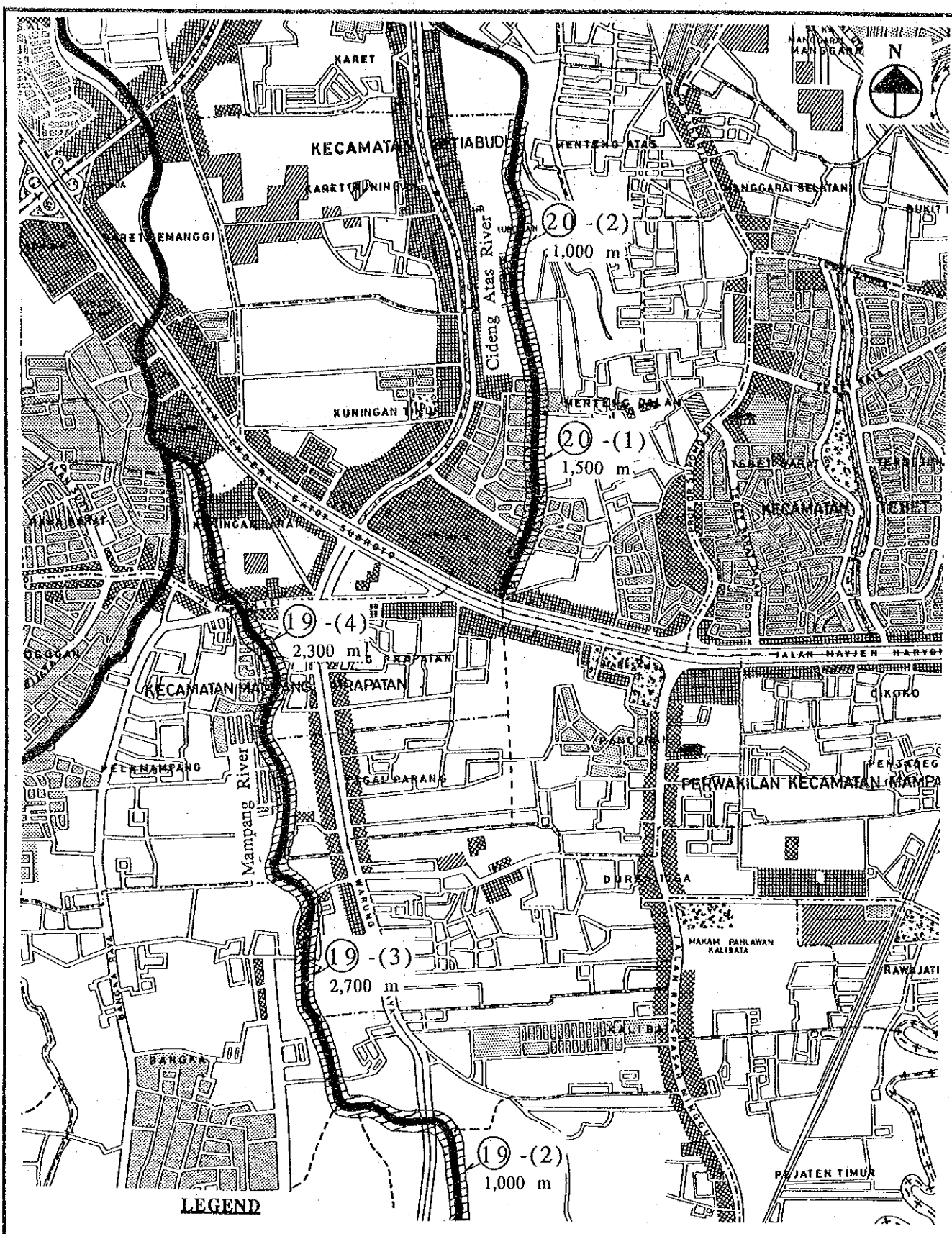

FIG. G.15 (4) LOCATION MAP OF DRAINAGE CHANNEL DEVELOPMENT PLAN

THE STUDY ON URBAN DRAINAGE AND WASTE WATER DISPOSAL PROJECT IN THE CITY OF JAKARTA

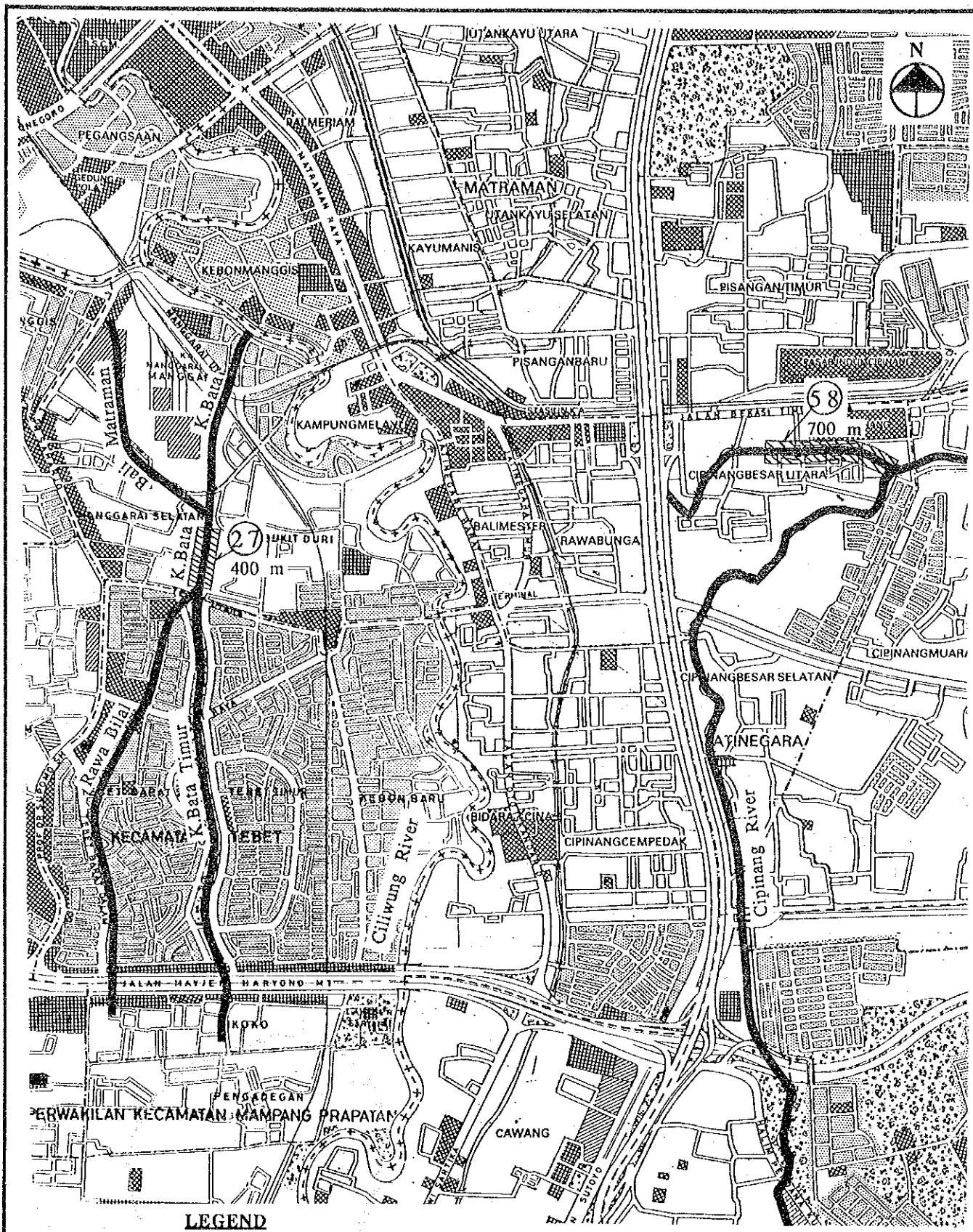

FIG. G.15 (5) LOCATION MAP OF DRAINAGE CHANNEL DEVELOPMENT PLAN

THE STUDY ON URBAN DRAINAGE AND WASTE WATER DISPOSAL PROJECT IN THE CITY OF JAKARTA

JICA A.D 1991

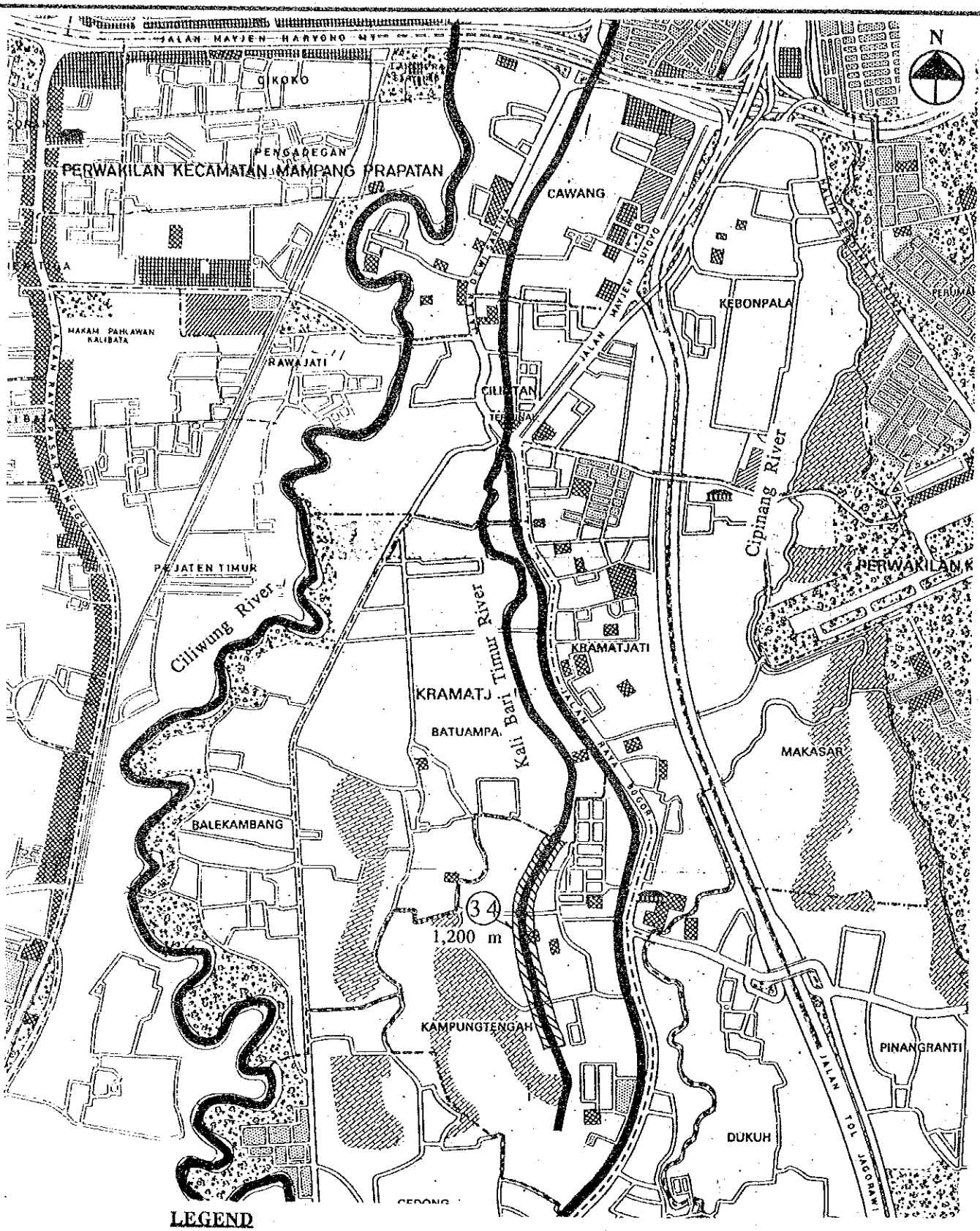

FIG. G.15 (6) LOCATION MAP OF DRAINAGE CHANNEL DEVELOPMENT PLAN

THE STUDY ON URBAN DRAINAGE AND WASTE WATER DISPOSAL PROJECT IN THE CITY OF JAKARTA

JICA A.D 1991

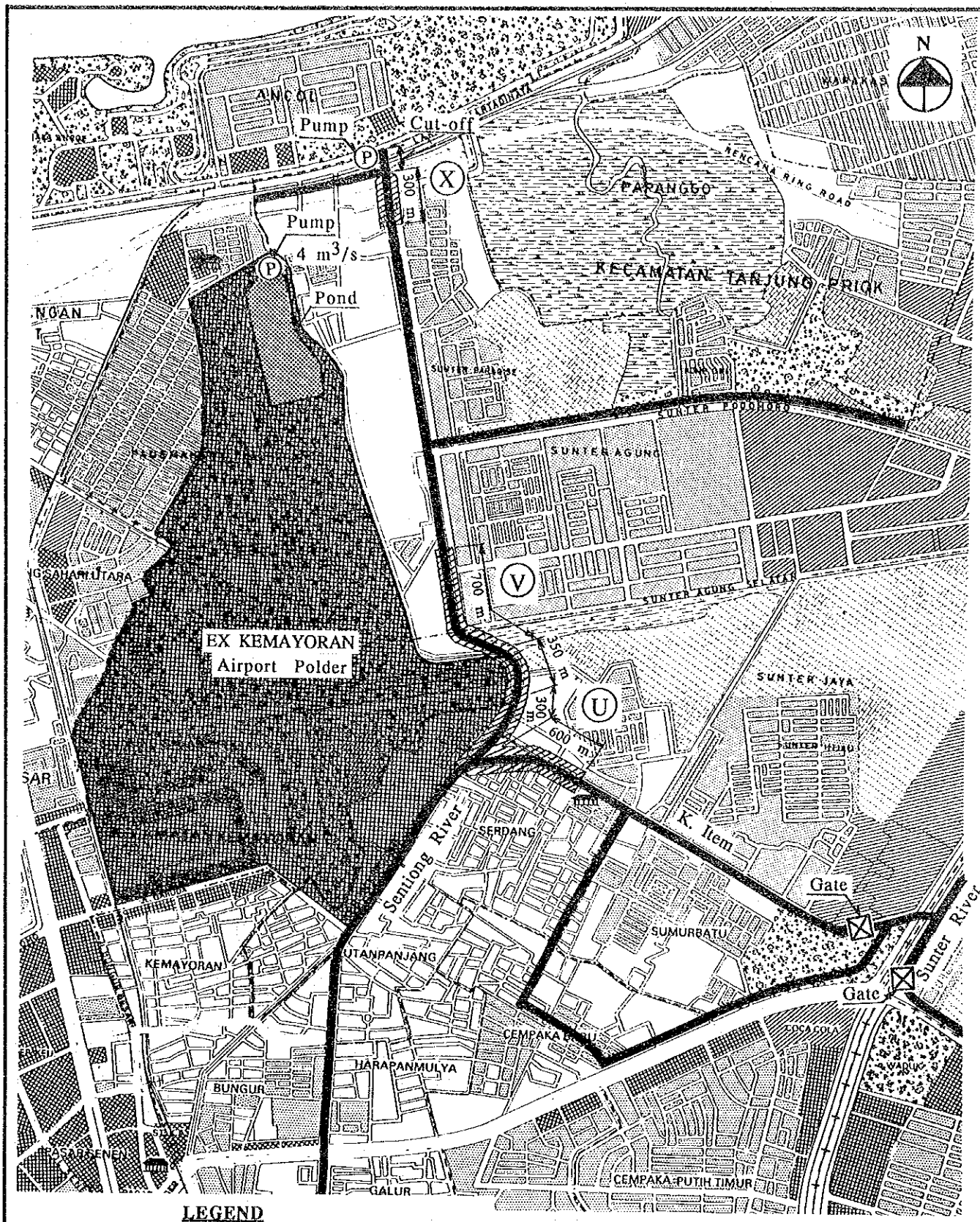

FIG. G.15 (7) LOCATION MAP OF DRAINAGE CHANNEL DEVELOPMENT PLAN

THE STUDY ON URBAN DRAINAGE AND WASTE WATER DISPOSAL PROJECT IN THE CITY OF JAKARTA

JICA A.D 1991

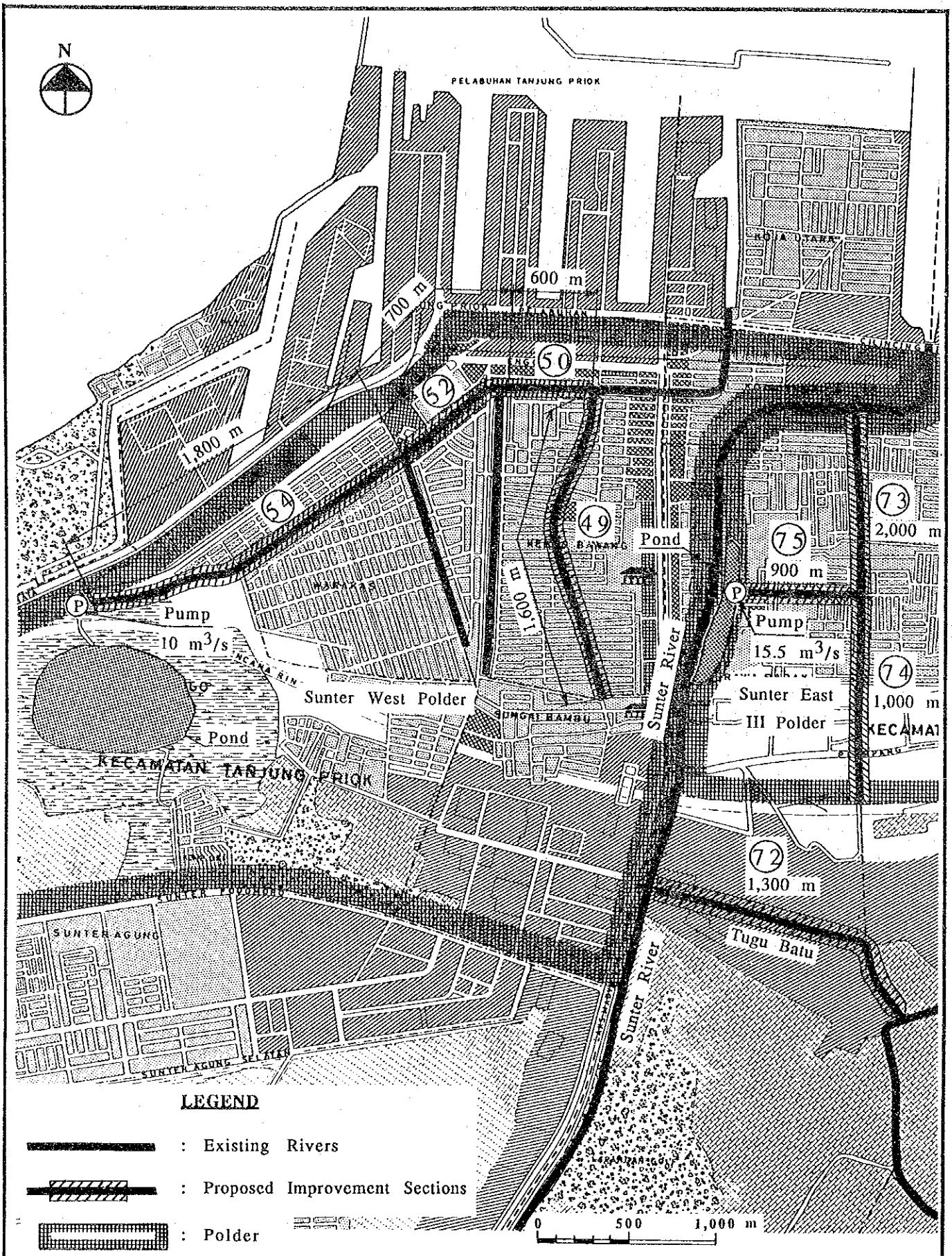

FIG. G.15 (8) LOCATION MAP OF DRAINAGE CHANNEL DEVELOPMENT PLAN

THE STUDY ON URBAN DRAINAGE AND WASTE WATER DISPOSAL PROJECT IN THE CITY OF JAKARTA

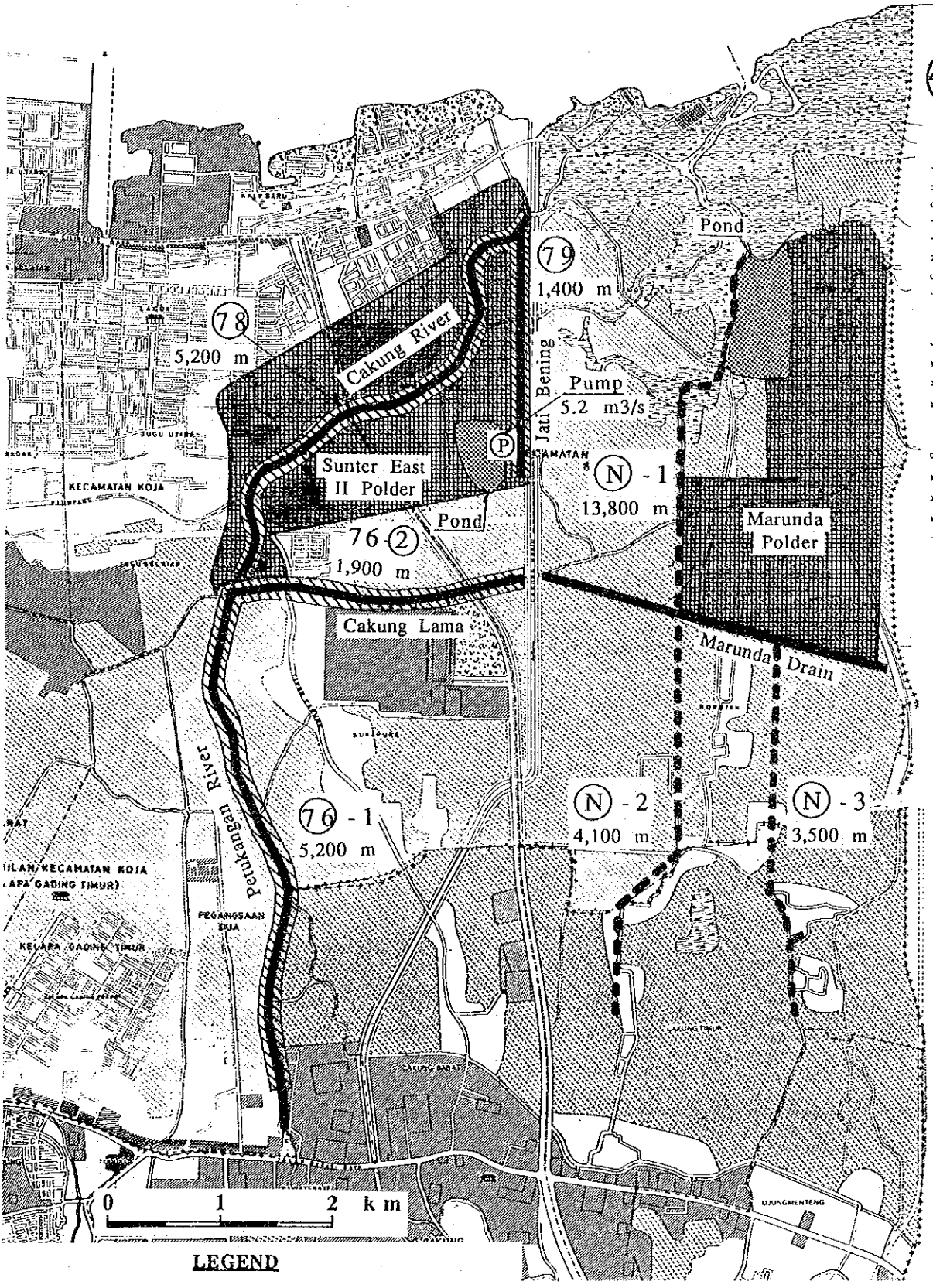

FIG. G.15 (9) LOCATION MAP OF DRAINAGE CHANNEL DEVELOPMENT PLAN

THE STUDY ON URBAN DRAINAGE AND WASTE WATER DISPOSAL PROJECT IN THE CITY OF JAKARTA

JICA A.D 1991

No.1 - (1)

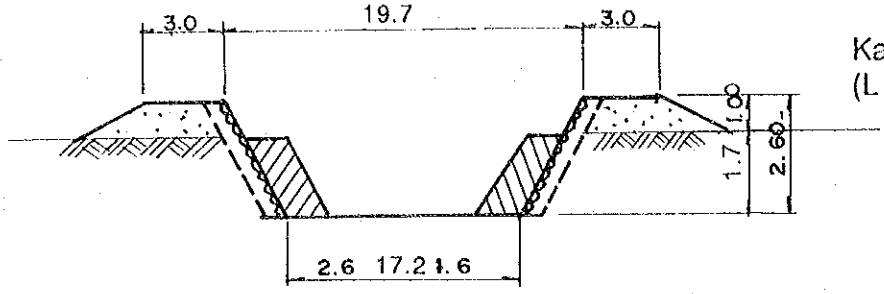

Kamal river
(L = 8,000.0m)

No.1 - (2)

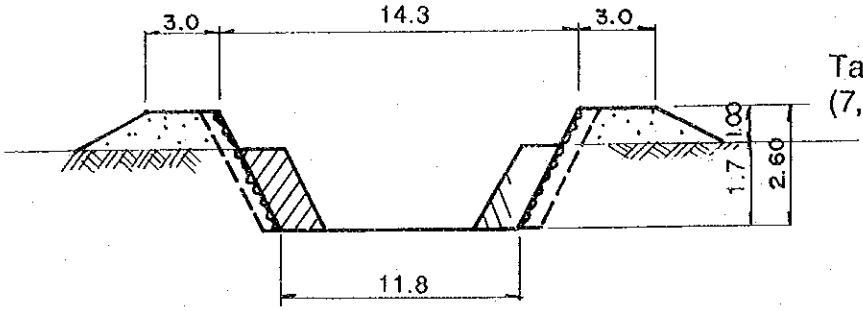

Tanjumgang river
(7,000.0m)

No.2 - (1)

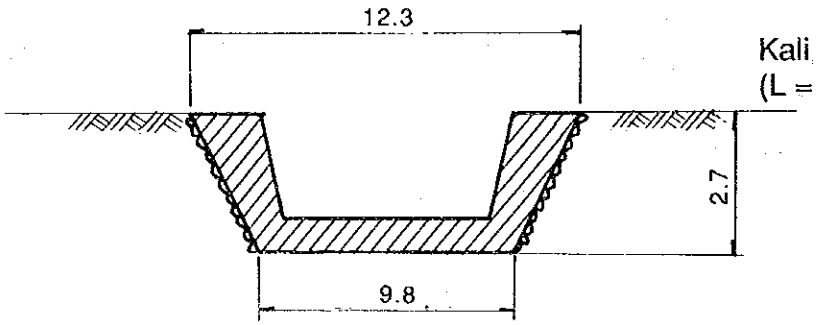

Kali Gede / Kali Bor
(L = 5,000.0m)

No.2 - (2)

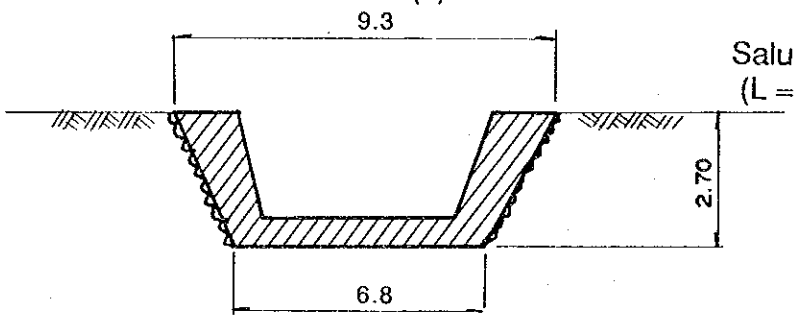

Salurang Cengkareng
(L = 4,500.0m)

No.2 - (3)

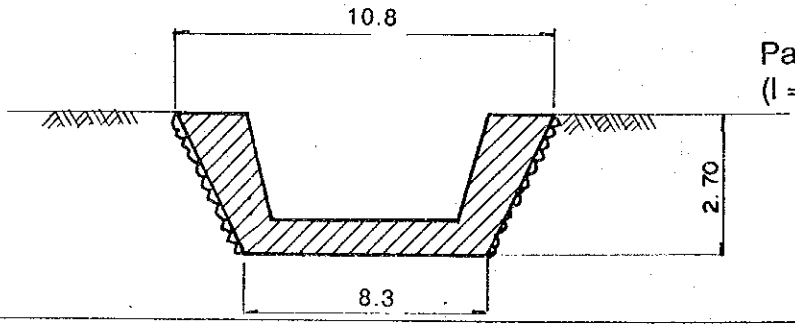

Padongkelan
(l = 3,000.0m)

FIG.G.16(1)	CROSS SECTION OF PROPOSED CHANNEL IMPROVEMENT

THE STUDY ON URBAN DRAINAGE AND WASTE WATER DISPOSAL PROJECT IN THE CITY OF JAKARTA

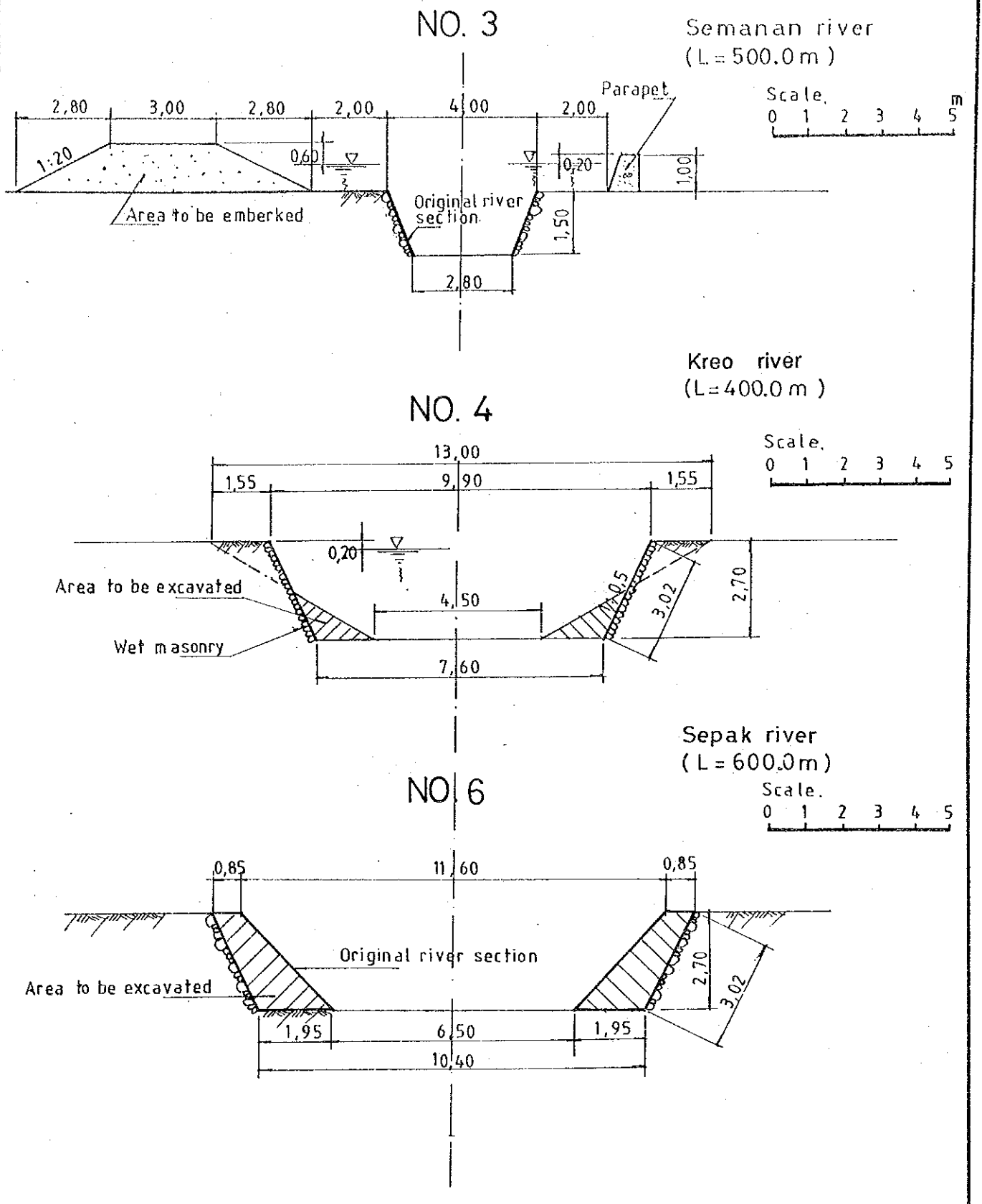

FIG.G.16(2) | CROSS SECTION OF PROPOSED CHANNEL IMPROVEMENT

THE STUDY ON URBAN DRAINAGE AND WASTE WATER DISPOSAL PROJECT IN THE CITY OF JAKARTA

JICA A.D 1991

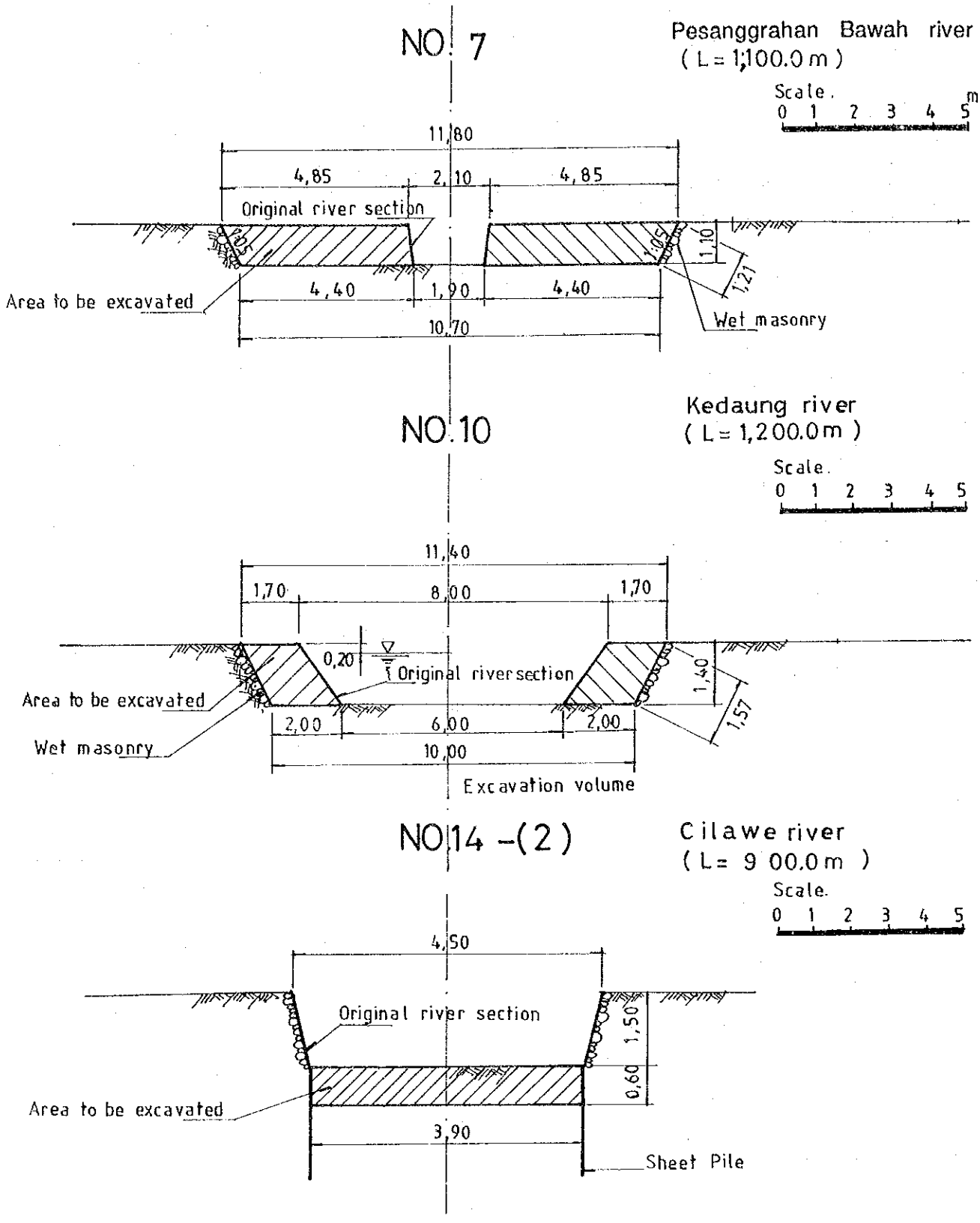

FIG.G.16(3) CROSS SECTION OF PROPOSED CHANNEL IMPROVEMENT

THE STUDY ON URBAN DRAINAGE AND WASTE WATER DISPOSAL PROJECT IN THE CITY OF JAKARTA

JICA A.D 1991

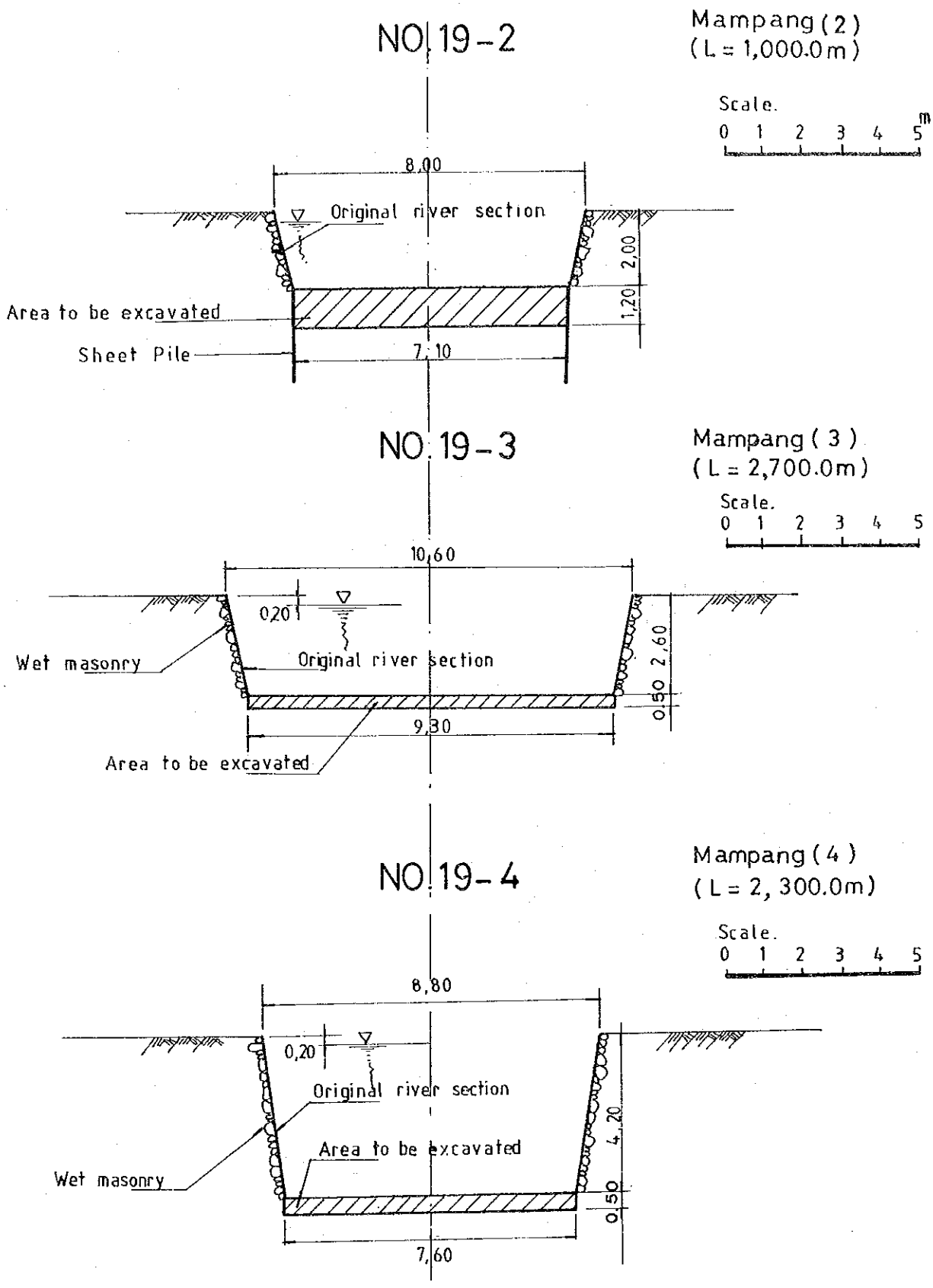

FIG.G.16(4)	CROSS SECTION OF PROPOSED CHANNEL IMPROVEMENT

THE STUDY ON URBAN DRAINAGE AND WASTE WATER DISPOSAL PROJECT IN THE CITY OF JAKARTA

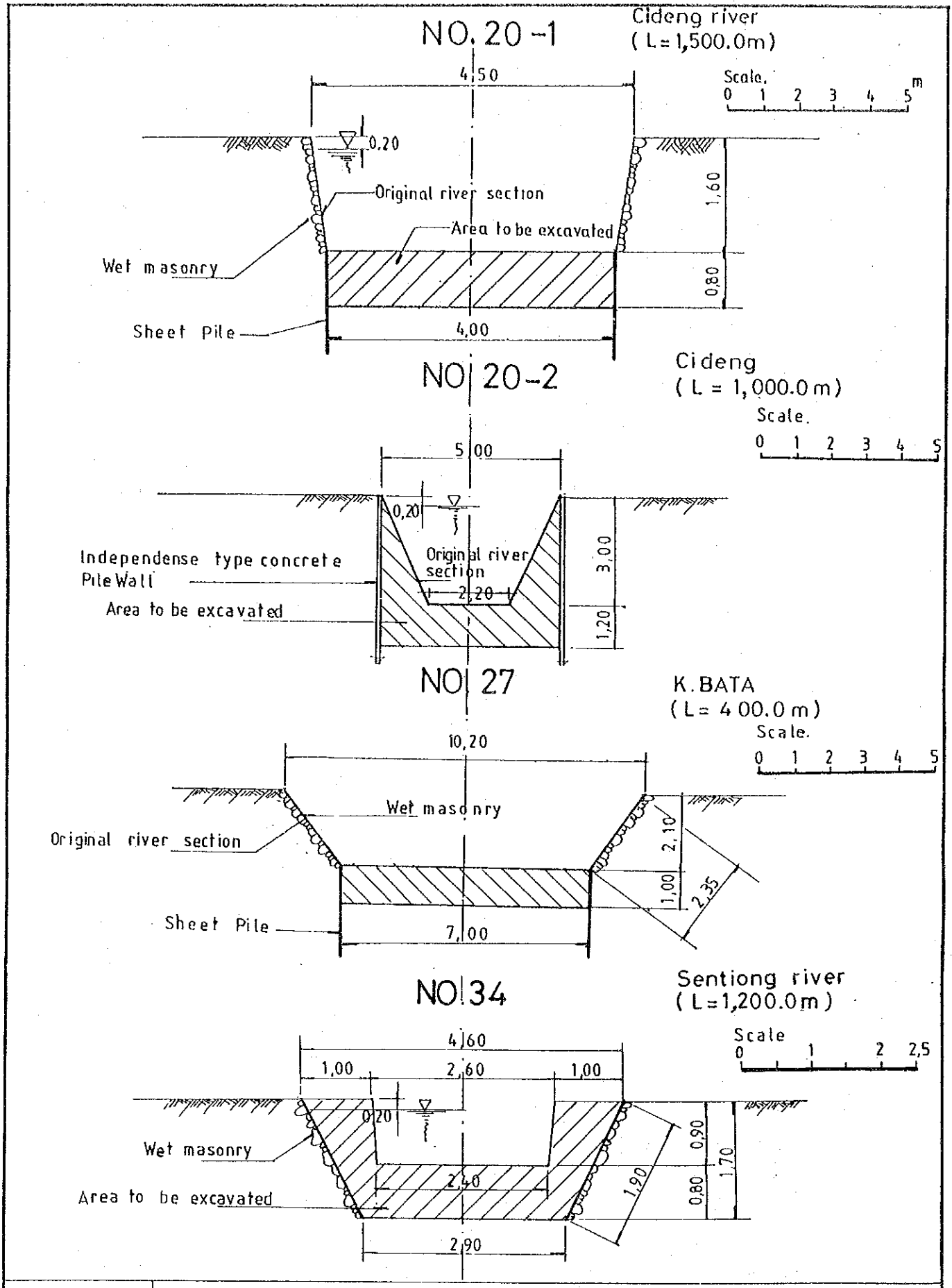

FIG.G.16(5) CROSS SECTION OF PROPOSED CHANNEL IMPROVEMENT

THE STUDY ON URBAN DRAINAGE AND WASTE WATER DISPOSAL PROJECT IN THE CITY OF JAKARTA

JICA A.D 1991

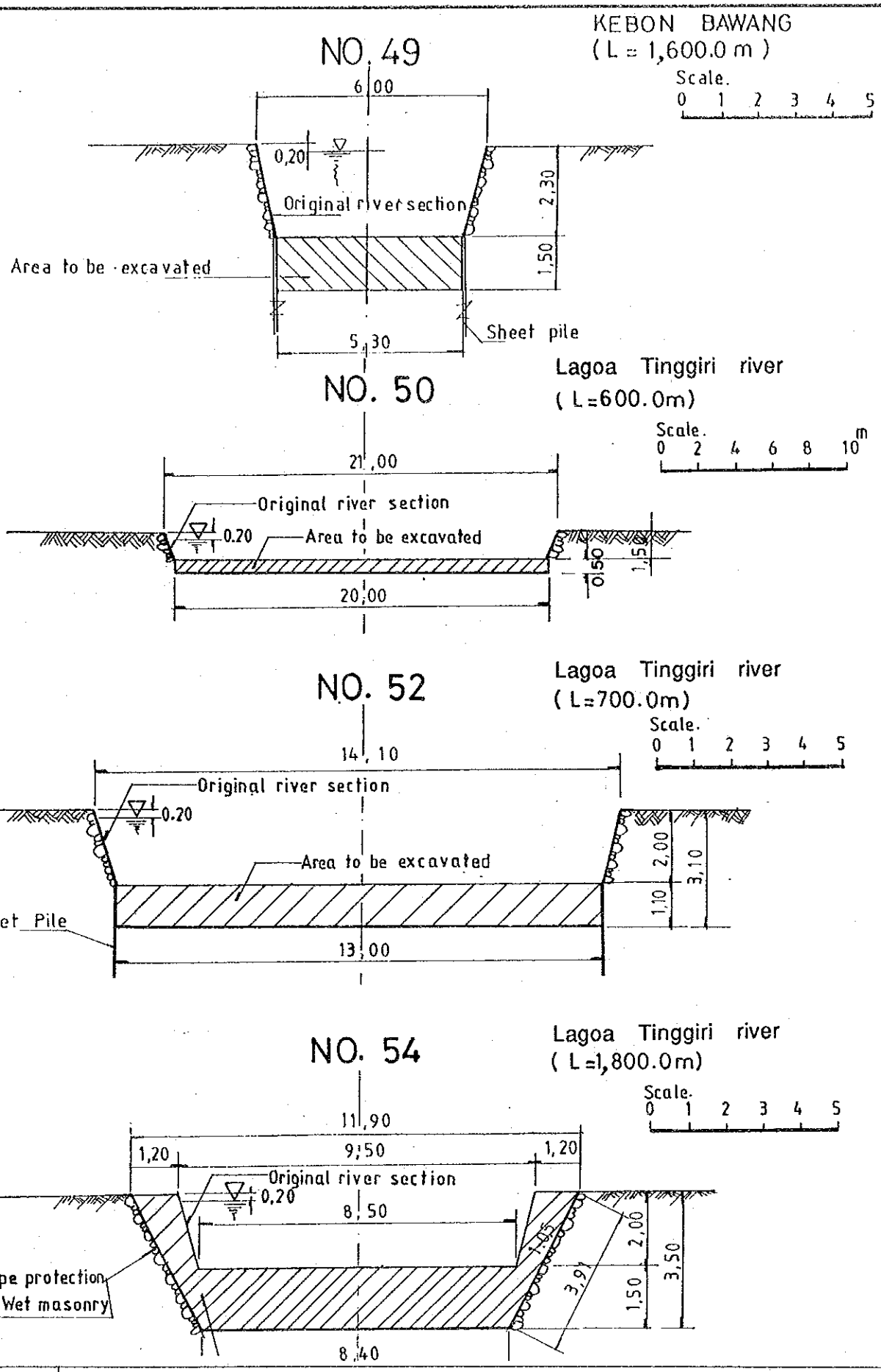

FIG.G.16(6) CROSS SECTION OF PROPOSED CHANNEL IMPROVEMENT

THE STUDY ON URBAN DRAINAGE AND WASTE WATER DISPOSAL PROJECT IN THE CITY OF JAKARTA

JICA A.D 1991

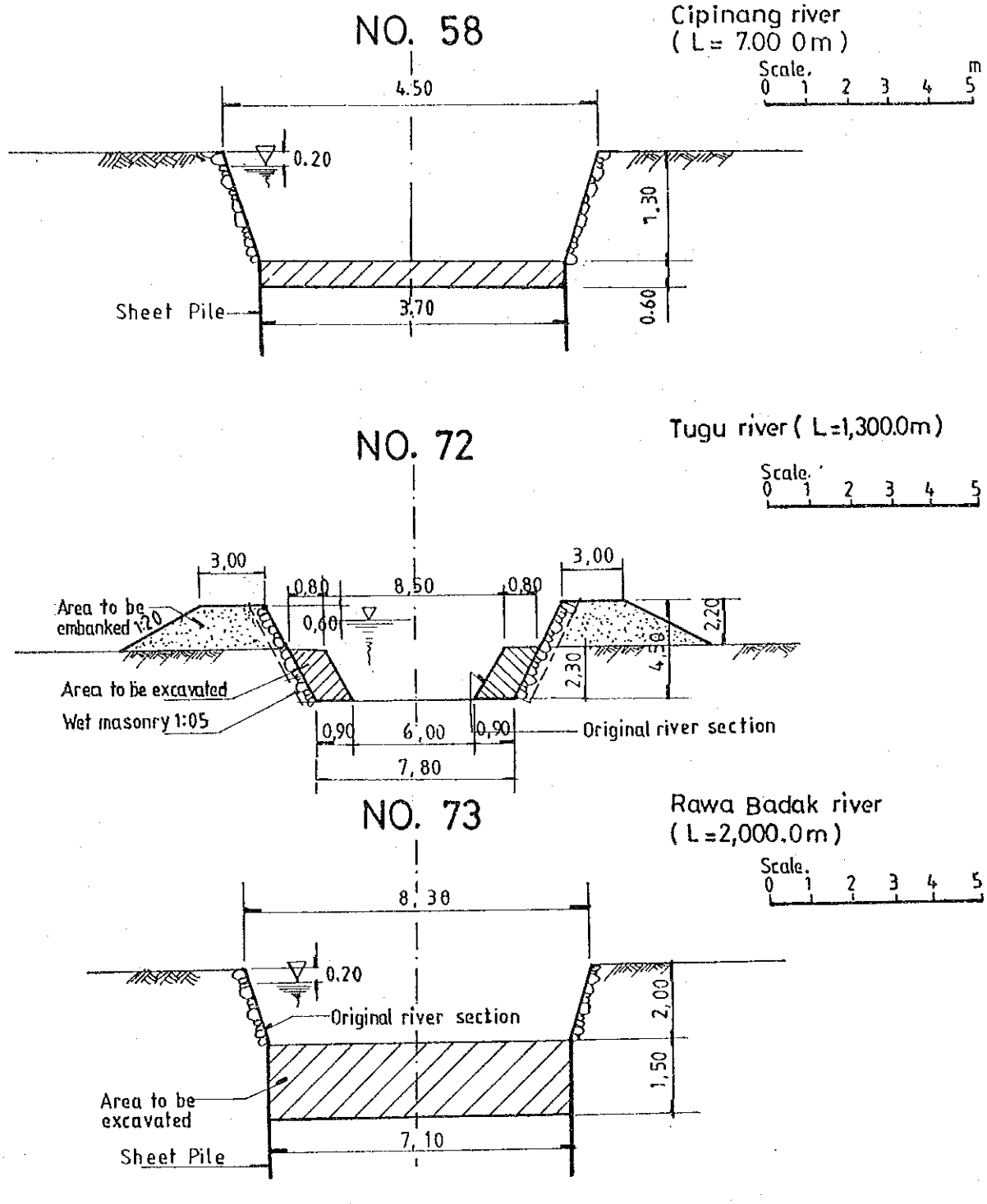

FIG.G.16(7)	CROSS SECTION OF PROPOSED CHANNEL IMPROVEMENT

THE STUDY ON URBAN DRAINAGE AND WASTE WATER DISPOSAL PROJECT IN THE CITY OF JAKARTA

NO. 74

Rawa Badak river
(L = 1,000.0 m)

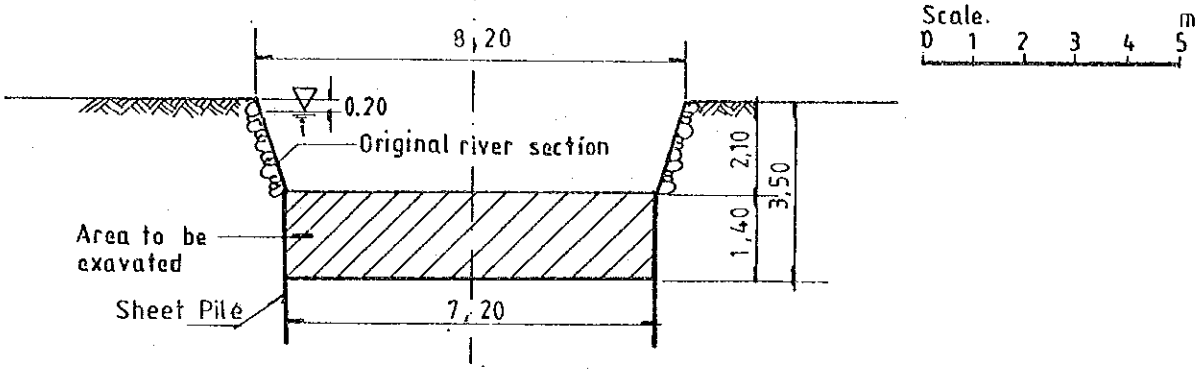

NO. 75

Pelumpang river
(L = 900.0m)
Non Scale.

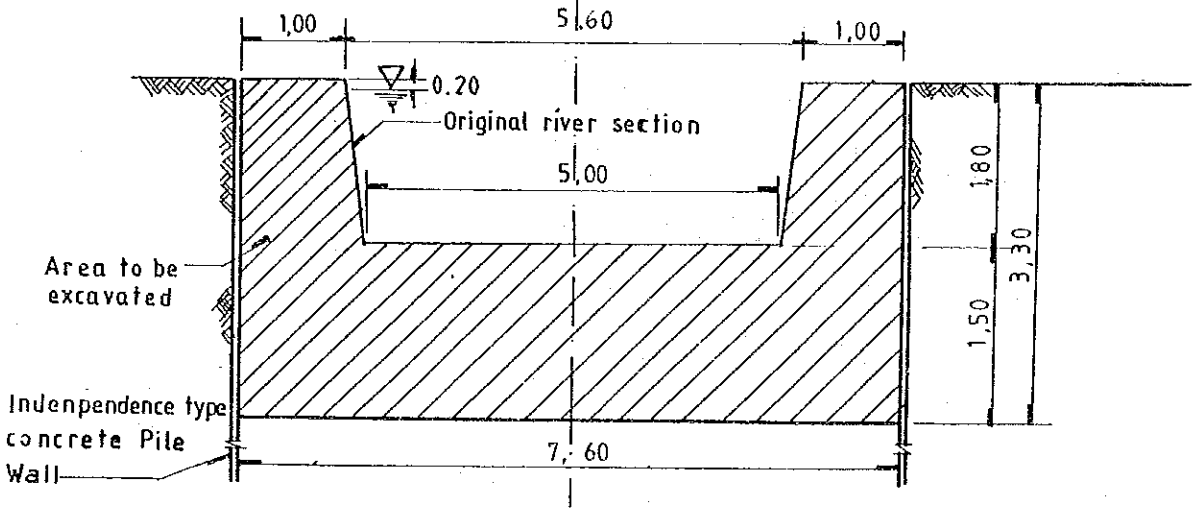

NO. 76 – 1

Cakung Lama river (1)
(L = 5,200.0 m)
Non Scale.

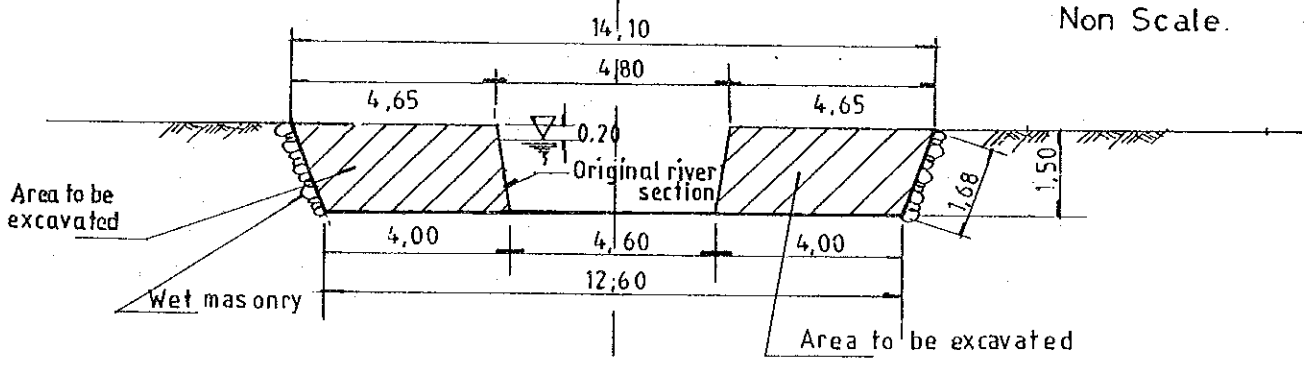

FIG.G.16(8) CROSS SECTION OF PROPOSED CHANNEL IMPROVEMENT

THE STUDY ON URBAN DRAINAGE AND WASTE WATER DISPOSAL PROJECT IN THE CITY OF JAKARTA

JICA A.D 1991

NO.76-2

Cakung Lama river (2)
(L = 1,900.0 m)

Non Scale

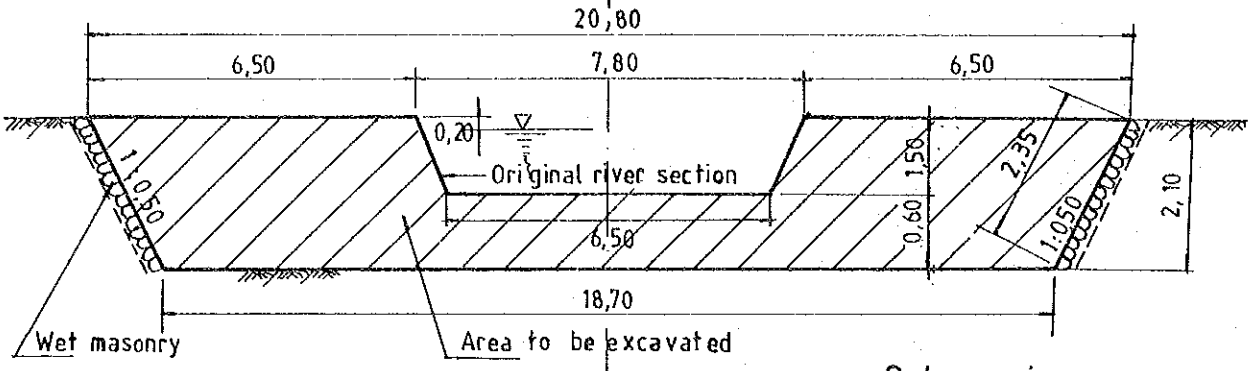

NO.78

Cakung river
(L= 5,200.0 m)

Scale
0 1 2 3 4 5 m

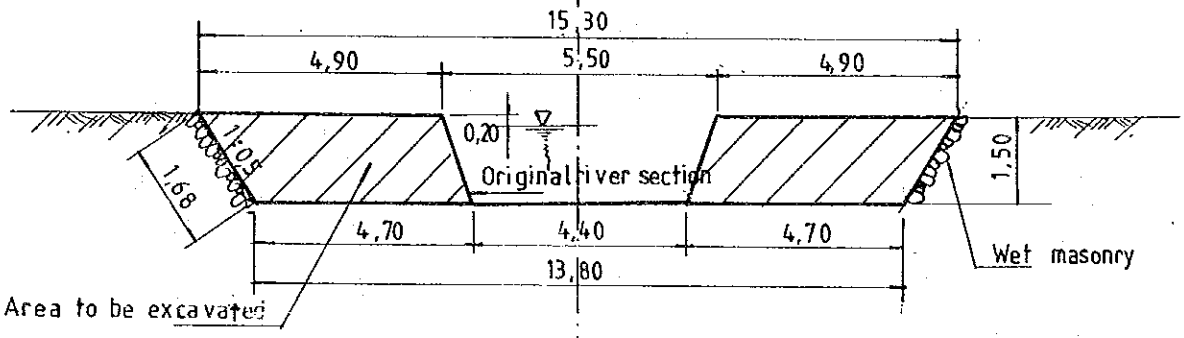

NO.79

Jati Bening river
(L= 1,400.0 m)

Scale.
0 1 2 3 4 5

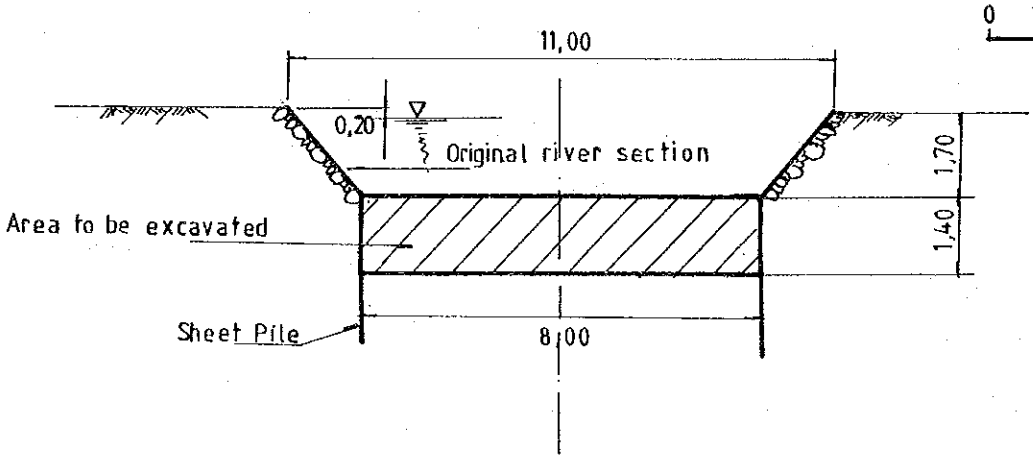

FIG.G.16(9) CROSS SECTION OF PROPOSED CHANNEL IMPROVEMENT

THE STUDY ON URBAN DRAINAGE AND WASTE WATER DISPOSAL PROJECT IN THE CITY OF JAKARTA

JICA A.D 1991

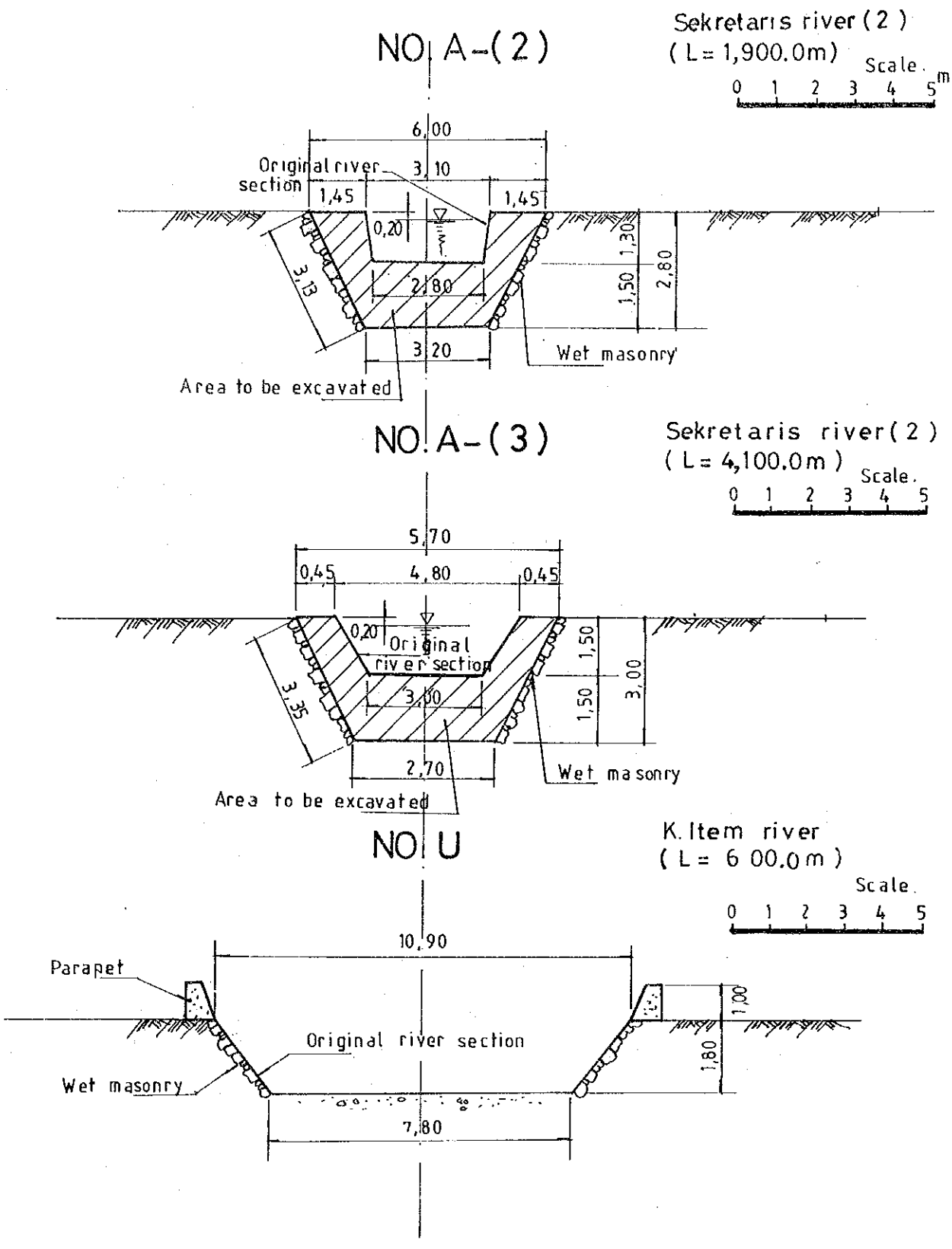

FIG.G.16(10) CROSS SECTION OF PROPOSED CHANNEL IMPROVEMENT

THE STUDY ON URBAN DRAINAGE AND WASTE WATER DISPOSAL PROJECT IN THE CITY OF JAKARTA

NO. V-(1)

Sentiong river
(L = 1,000.0 m)

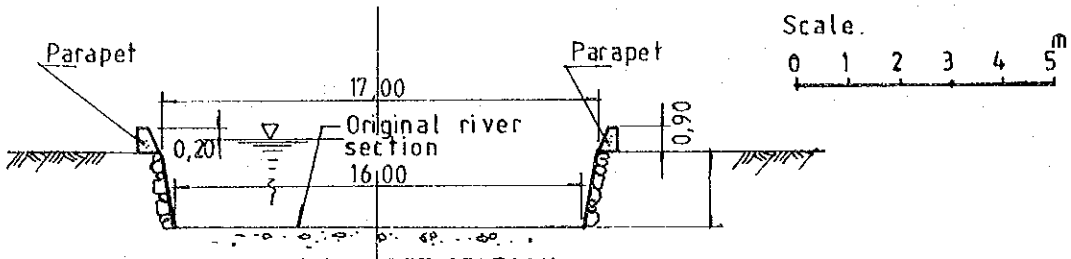

In case of PARAPET SECTION

NO. V-(2)

Sentiong river
(L = 350.0 m)

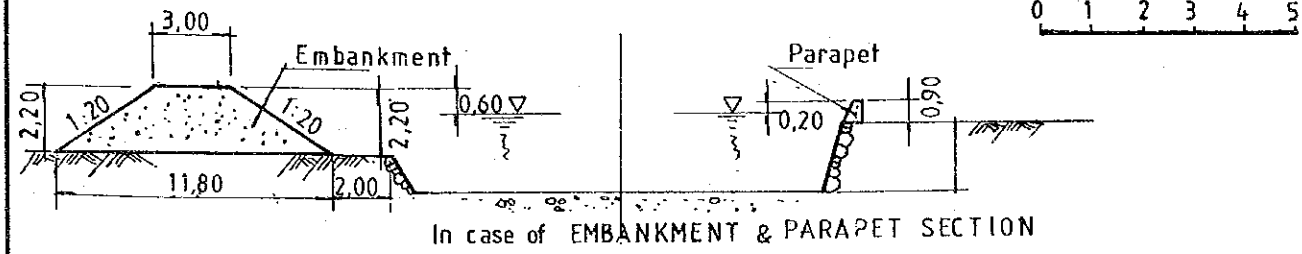

In case of EMBANKMENT & PARAPET SECTION

NO. X

Sentiong river
(L = 300.0 m)

Non Scale

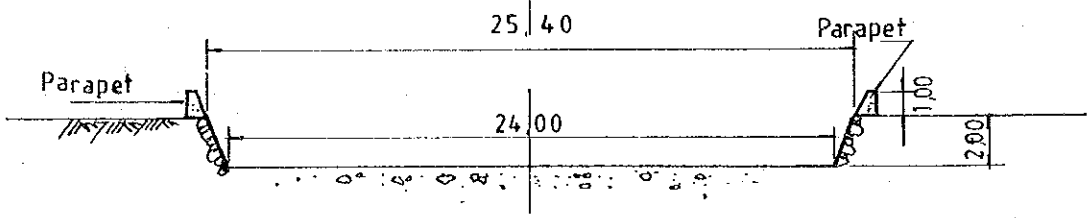

FIG.G.16(11)	CROSS SECTION OF PROPOSED CHANNEL IMPROVEMENT

THE STUDY ON URBAN DRAINAGE AND WASTE WATER DISPOSAL PROJECT IN THE CITY OF JAKARTA

JICA A.D 1991

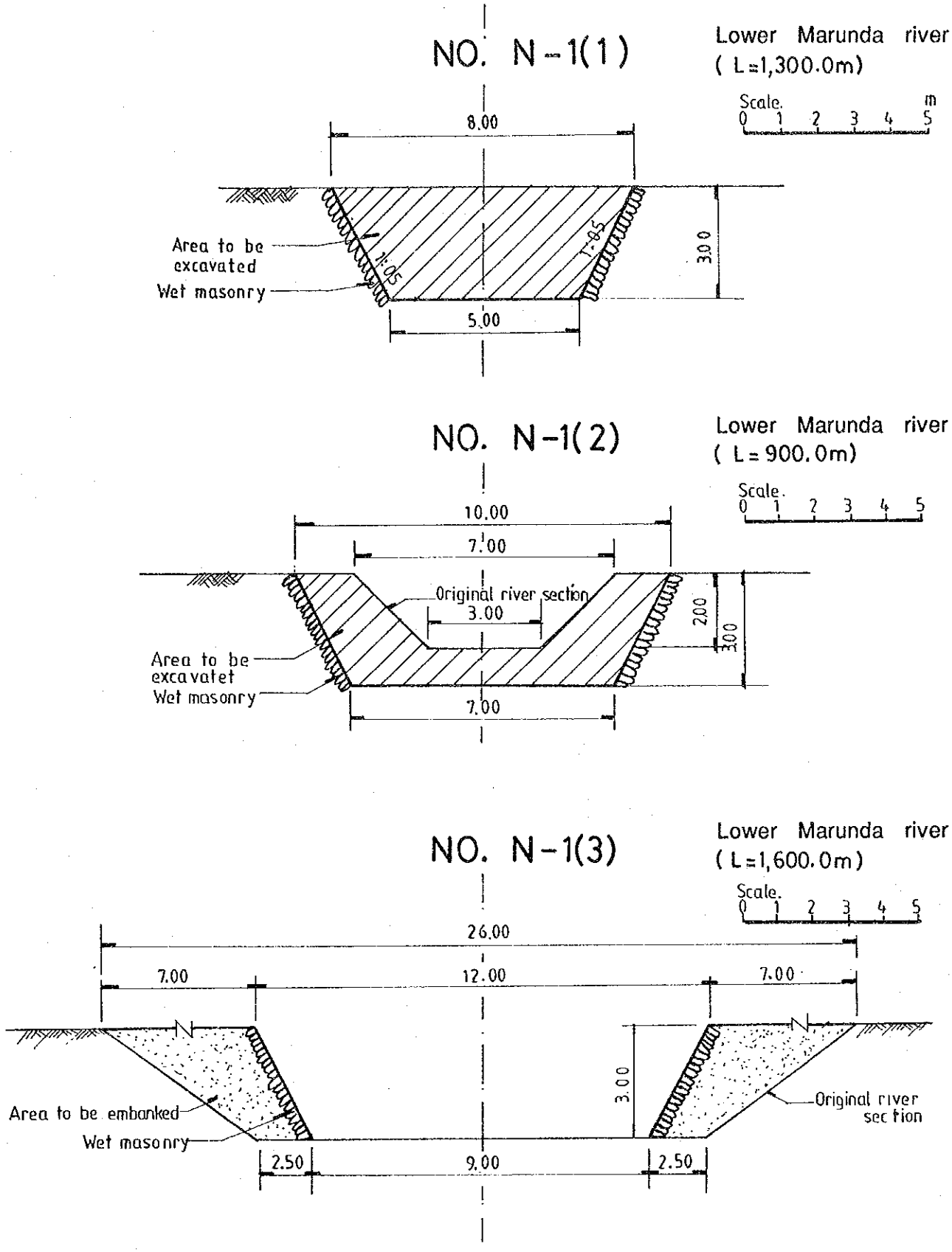

FIG.G.16(12) CROSS SECTION OF PROPOSED CHANNEL IMPROVEMENT

THE STUDY ON URBAN DRAINAGE AND WASTE WATER DISPOSAL PROJECT IN THE CITY OF JAKARTA

NO. N-2(1)

Upper Marunda river
(L = 1,400.0 m)

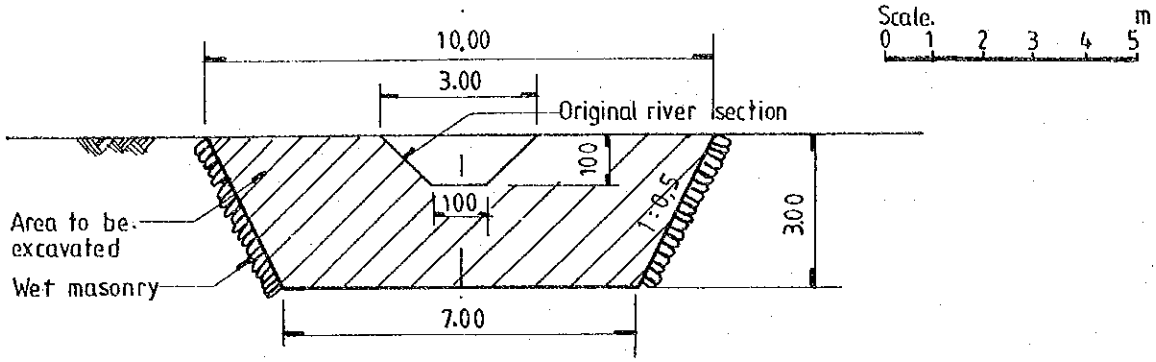

NO. N-2(2)

Upper Marunda river
(L = 900.0 m)

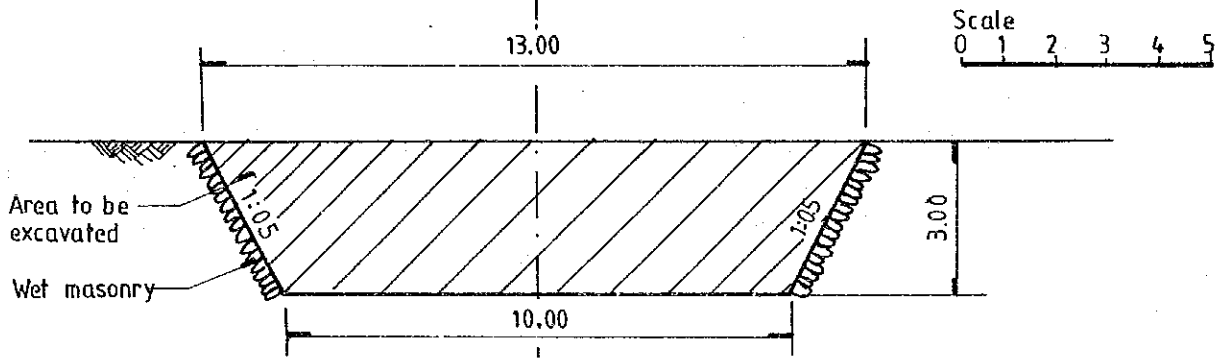

NO. N-2(3)

Upper Marunda river
(L = 1,800.0 m)

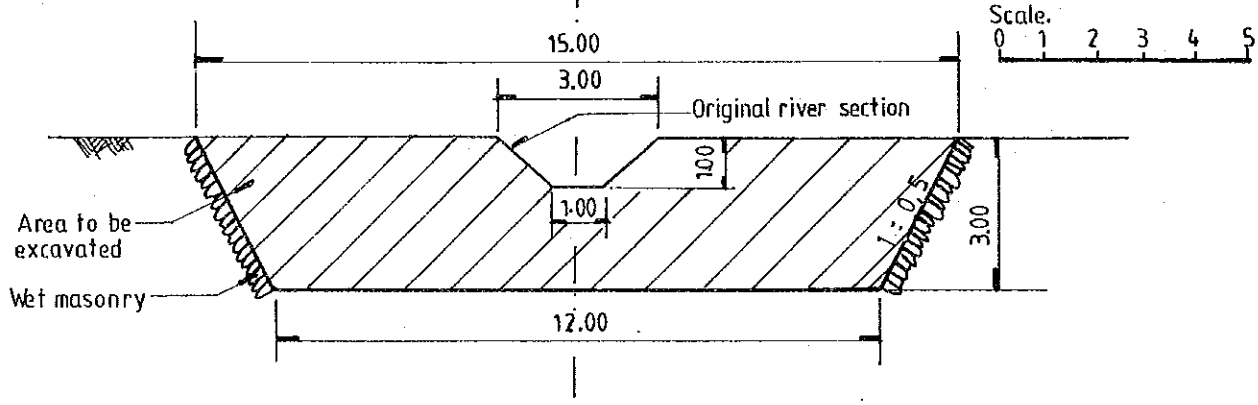

FIG.G.16(13) CROSS SECTION OF PROPOSED CHANNEL IMPROVEMENT

THE STUDY ON URBAN DRAINAGE AND WASTE WATER DISPOSAL PROJECT IN THE CITY OF JAKARTA

JICA A.D 1991

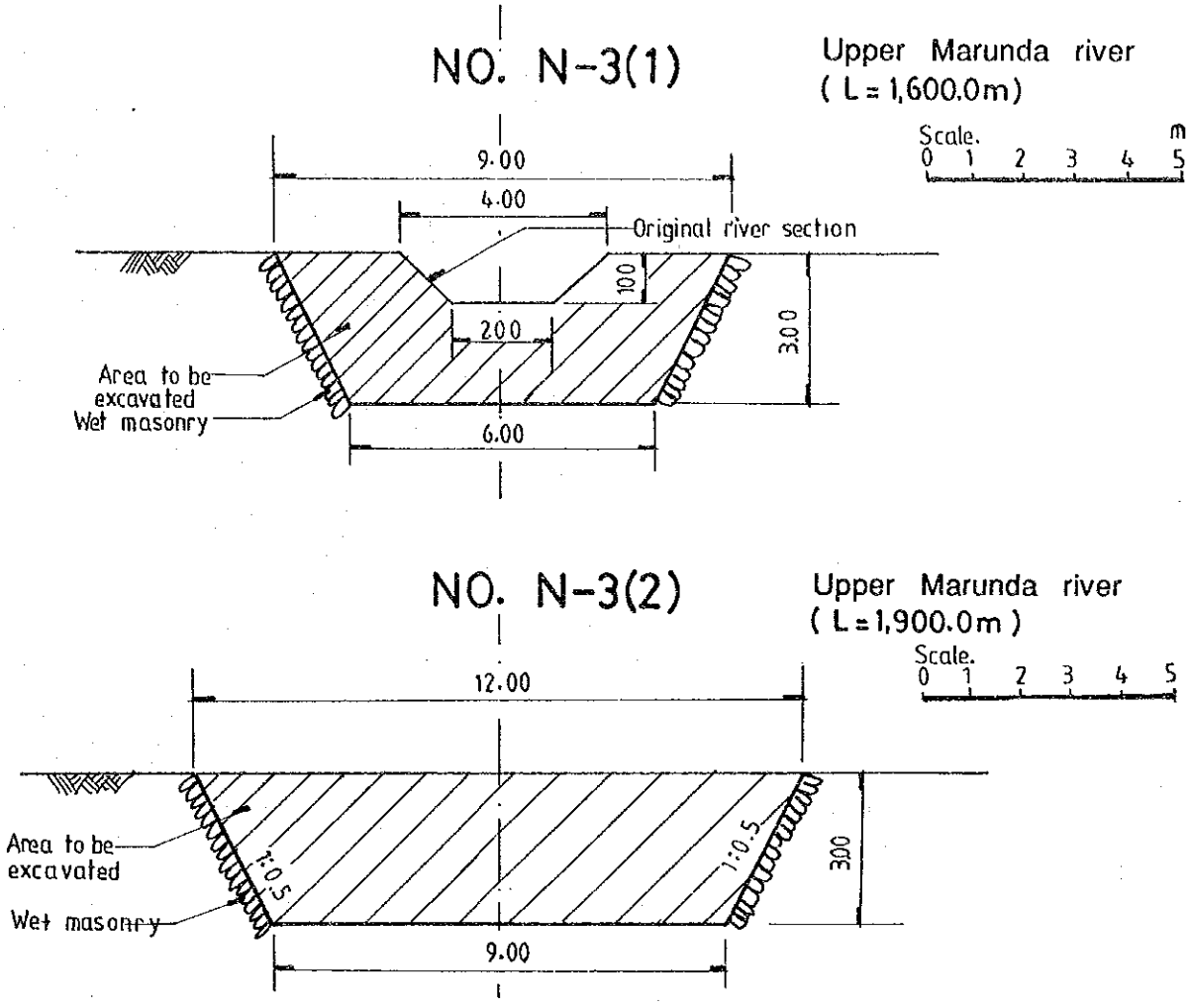

FIG.G.16(14) CROSS SECTION OF PROPOSED CHANNEL IMPROVEMENT

THE STUDY ON URBAN DRAINAGE AND WASTE WATER DISPOSAL PROJECT IN THE CITY OF JAKARTA

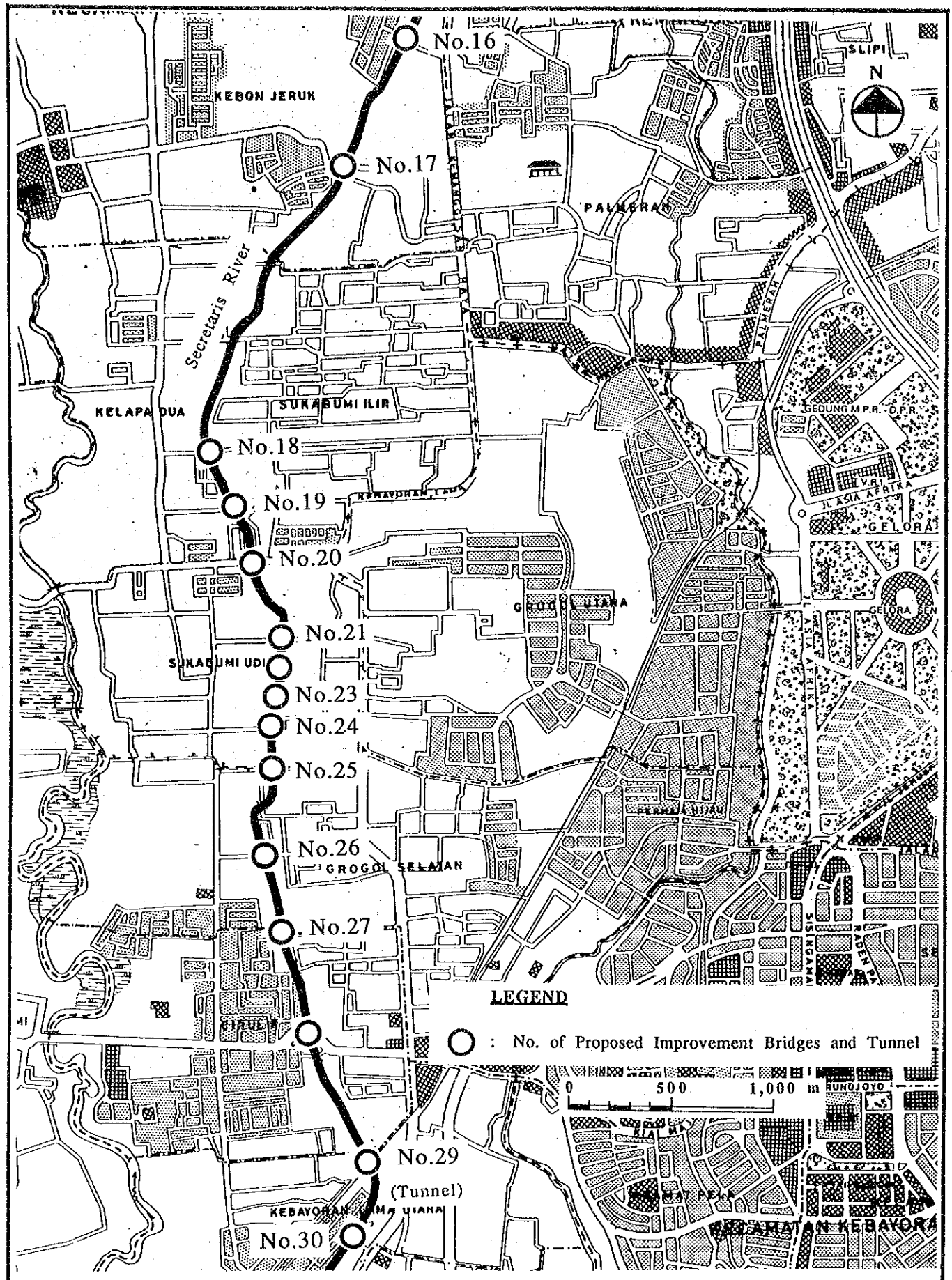

FIG.G.17 (1) LOCATION MAP OF BRIDGE DEVELOPMENT PLAN

THE STUDY ON URBAN DRAINAGE AND WASTE WATER DISPOSAL PROJECT IN THE CITY OF JAKARTA

JICA A.D 1991

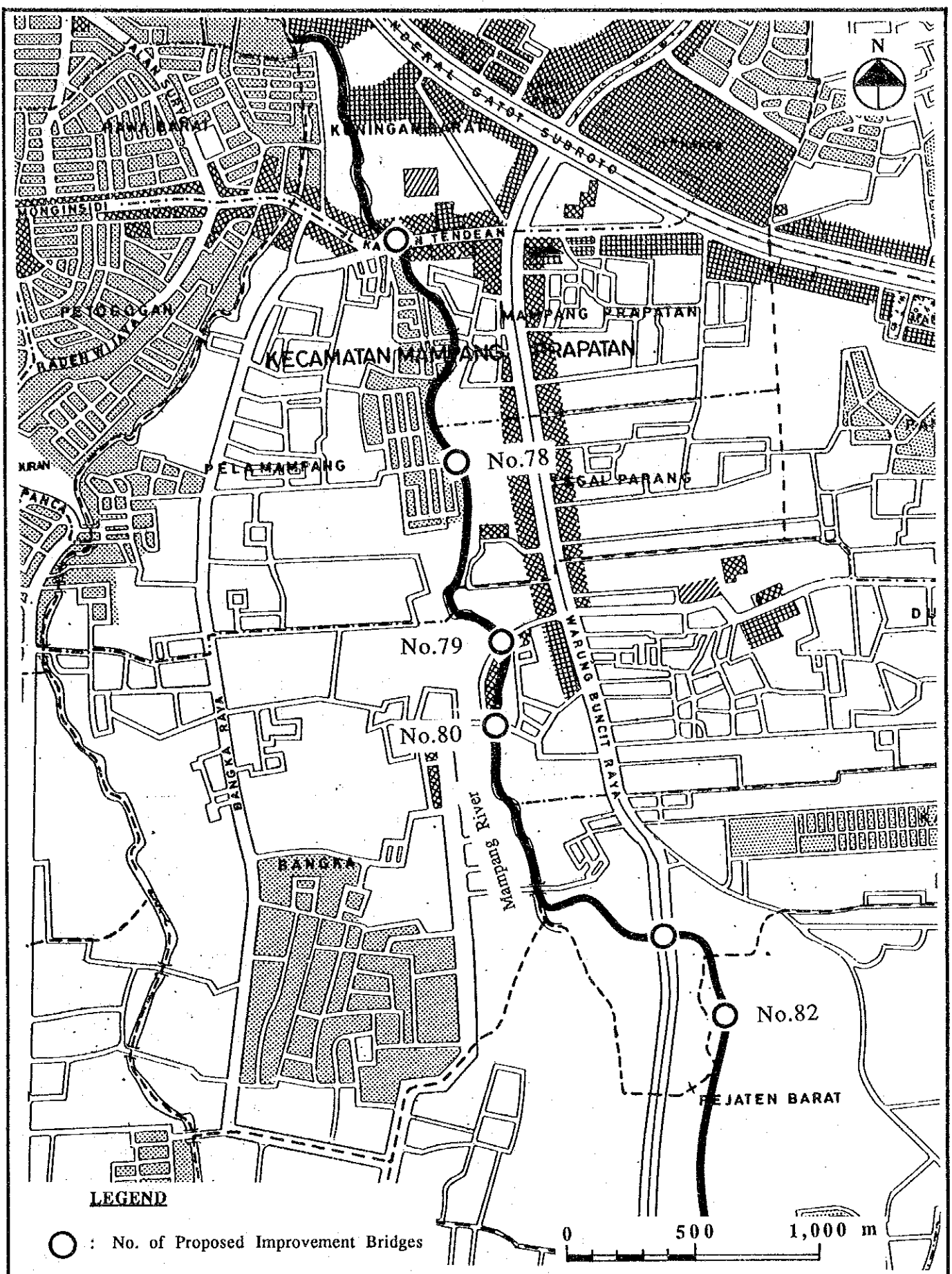

FIG. G.17 (2) LOCATION MAP OF BRIDGE DEVELOPMENT PLAN

THE STUDY ON URBAN DRAINAGE AND WASTE WATER DISPOSAL PROJECT IN THE CITY OF JAKARTA

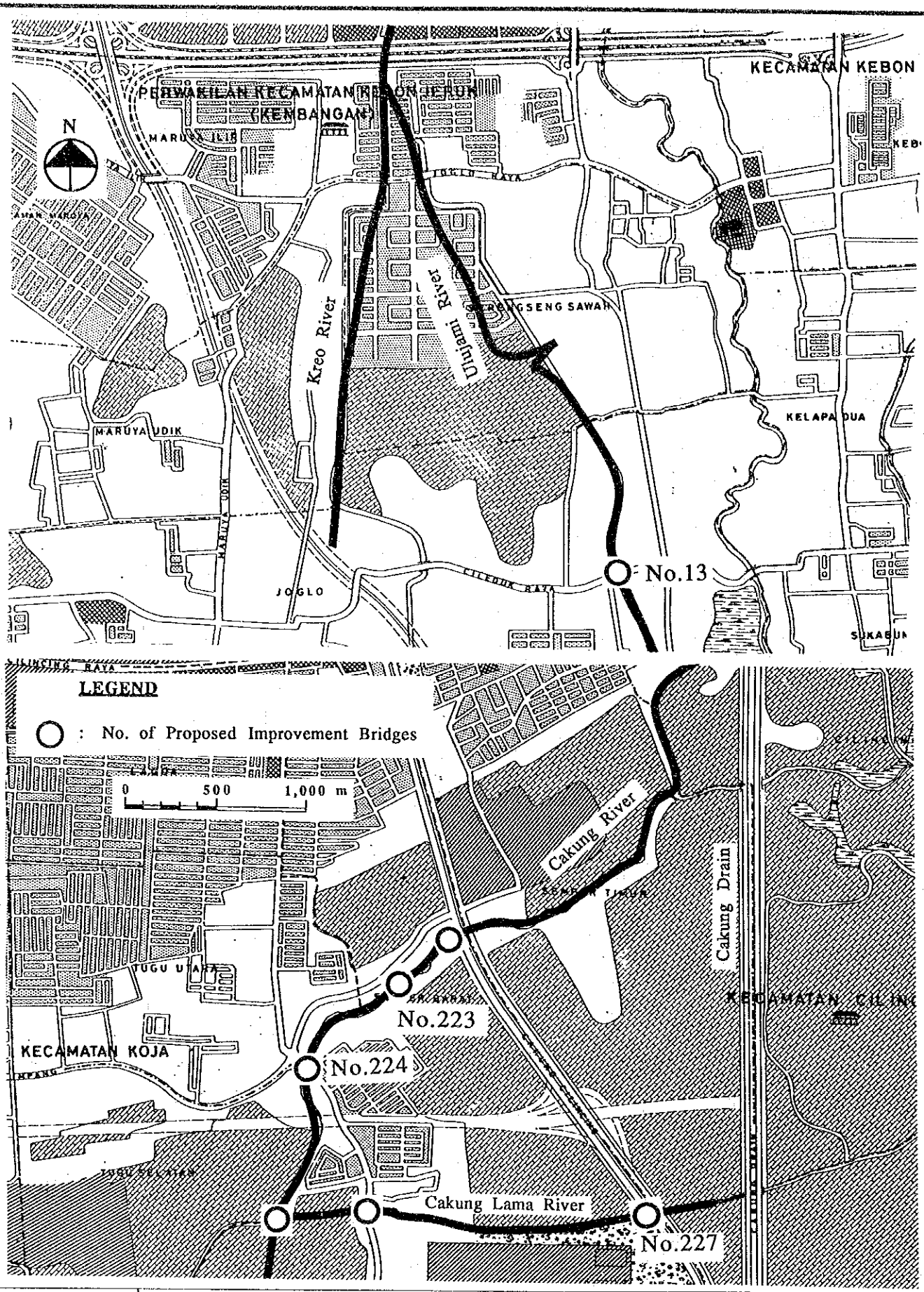

FIG. G.17 (3) LOCATION MAP OF BRIDGE DEVELOPMENT PLAN

THE STUDY ON URBAN DRAINAGE AND WASTE WATER DISPOSAL PROJECT IN THE CITY OF JAKARTA

Bridge NO.13 (Ulujami river)

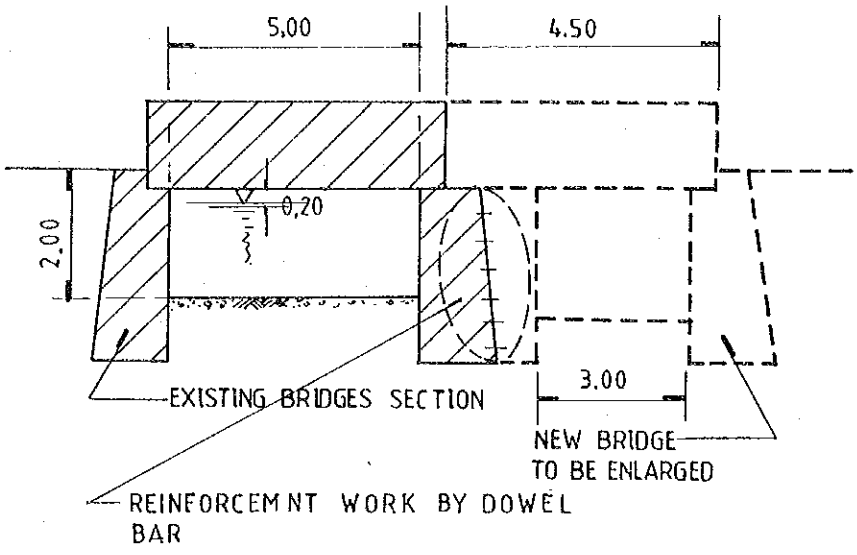

NEW BRIDGES DIMENTION
TO BE ENLARGED

Bridges Length (L) = 4.50 m

Bridges Width (W) = 7.00 m

Bridges surface Area (A) = 31.50 m^2

Scale. 0 1 2 3 4 5 6 7 m

Bridge NO.19 (Secretaris river)

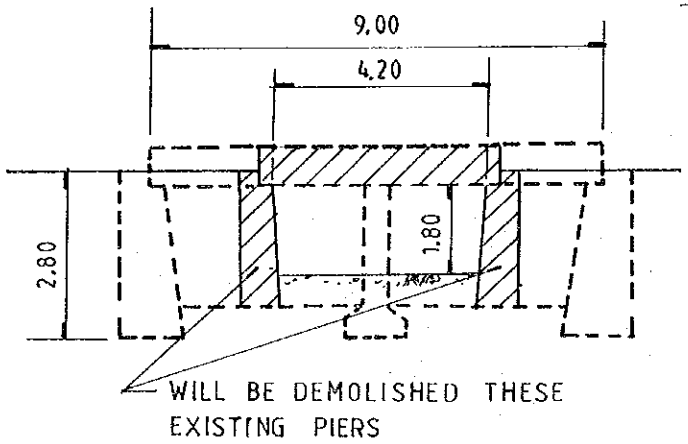

NEW BRIDGE

L = 9.00 m

W = 4.00 m

A = 36.00 m^2

Bridge NO.20 (Secretaris river)

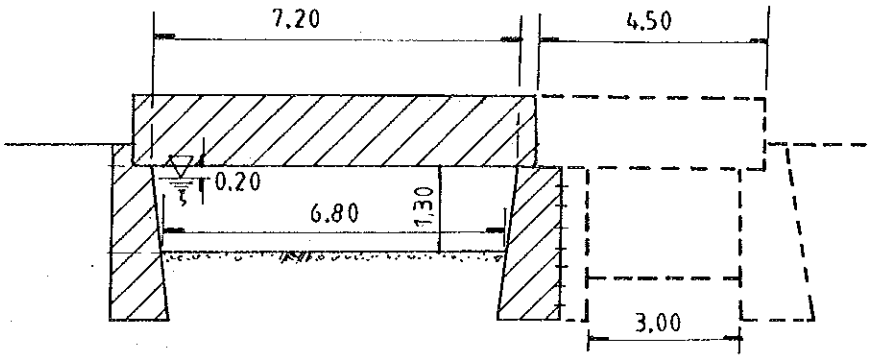

NEW BRIDGE

L = 4.50 m

W = 5.00 m

A = 22.50 m^2

FIG. G.18(1) PROPOSED CROSS SECTION OF BRIDGE IMPROVEMENT

Bridge NO.21 (Secretaris river)

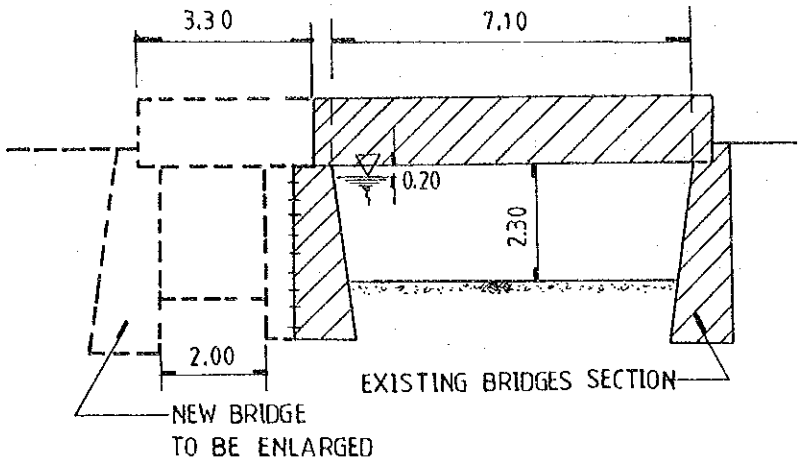

NEW BRIDGES DIMENTION
TO BE ENLARGED

Bridges Length (L) = 3.30 m

Bridges Width (W) = 5.00 m

Bridges surface Area (A) = 16.50 m^2

Scale.
0 1 2 3 4 5 6 7 m

Bridge NO.23 (Secretaris river)

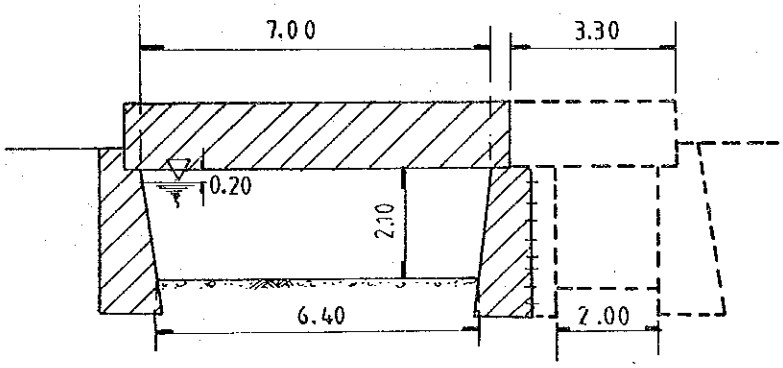

NEW BRIDGE

L = 3.30 m

W = 5.00 m

A = 16.50 m^2

Bridge NO.24 (Secretaris river)

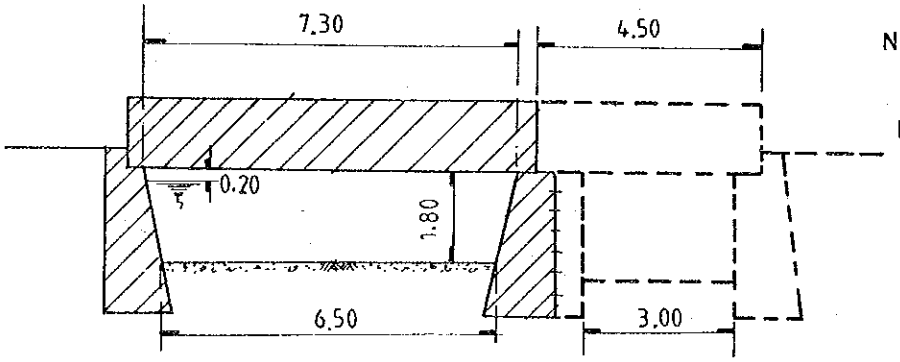

NEW BRIDGE

L = 4.50 m

W = 5.00 m

A = 22.50 m^2

FIG. G.18(2) PROPOSED CROSS SECTION OF BRIDGE IMPROVEMENT

THE STUDY ON URBAN DRAINAGE AND WASTE WATER DISPOSAL PROJECT IN THE CITY OF JAKARTA

JICA A.D 1991

Bridge NO. 25 (Secretaris river)

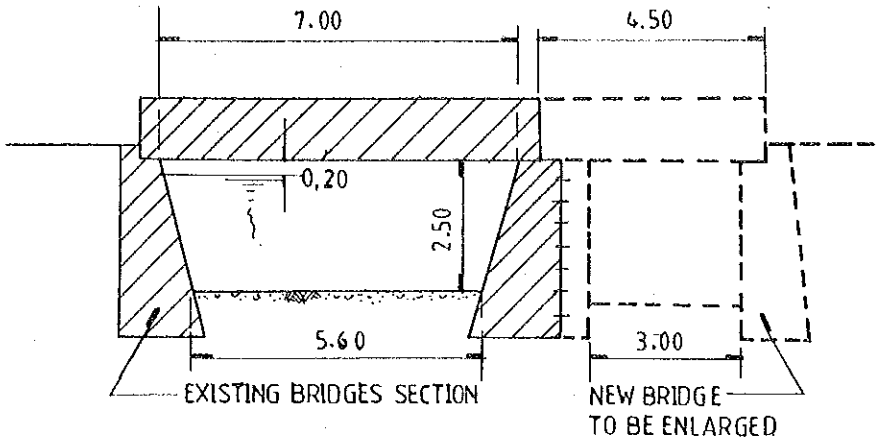

NEW BRIDGES DIMENTION
TO BE ENLARGED

Bridges Length (L) = 4.50m

Bridges Width (W) = 5.00m

Bridges surface Area (A) = 22.50m^2

Scale.
0 1 2 3 4 5 6 7m

Bridge NO. 26 (Secretaris river)

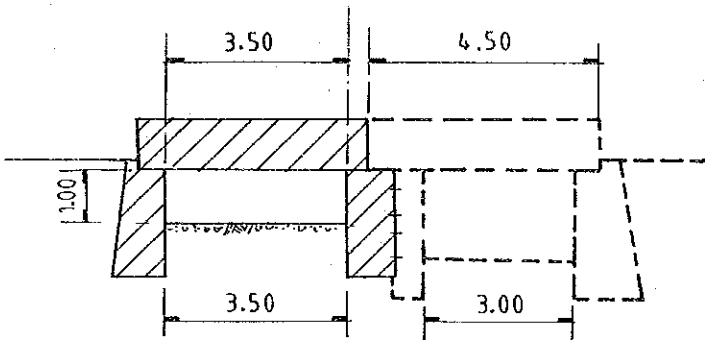

NEW BRIDGE

L = 4.50m

W = 3.00m

A = 13.50m^2

Bridge NO. 27 (Secretaris river)

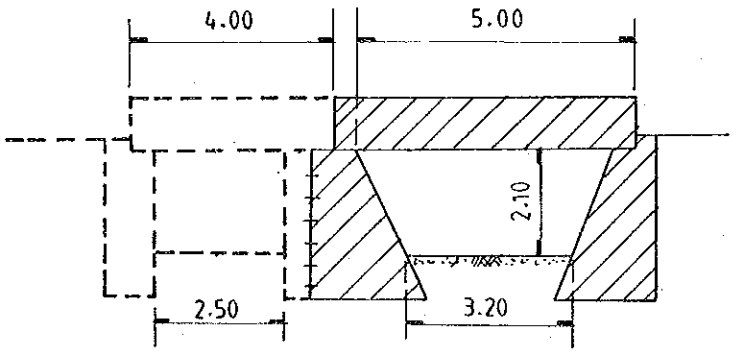

NEW BRIDGE

L = 4.00m

W = 5.00m

A = 20.00m^2

FIG. G.18(3)	PROPOSED CROSS SECTION OF BRIDGE IMPROVEMENT

THE STUDY ON URBAN DRAINAGE AND WASTE WATER DISPOSAL PROJECT IN THE CITY OF JAKARTA

Bridge(Tunnel)NO. 29
(Secretaris river)

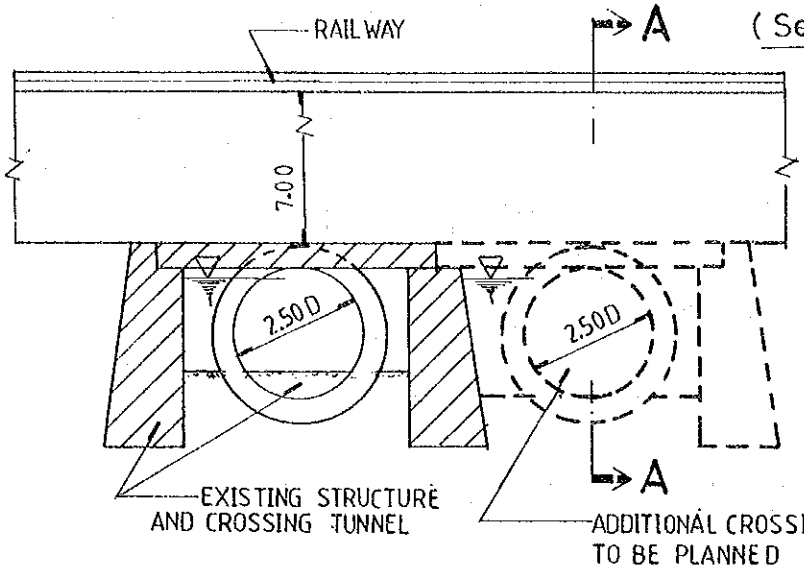

INSIDE AIR VOLUME OF TUNNEL (∇)

$$\nabla = \frac{\pi \cdot 2.50^2}{4} \times 33.00 = 162.00\ m^3$$

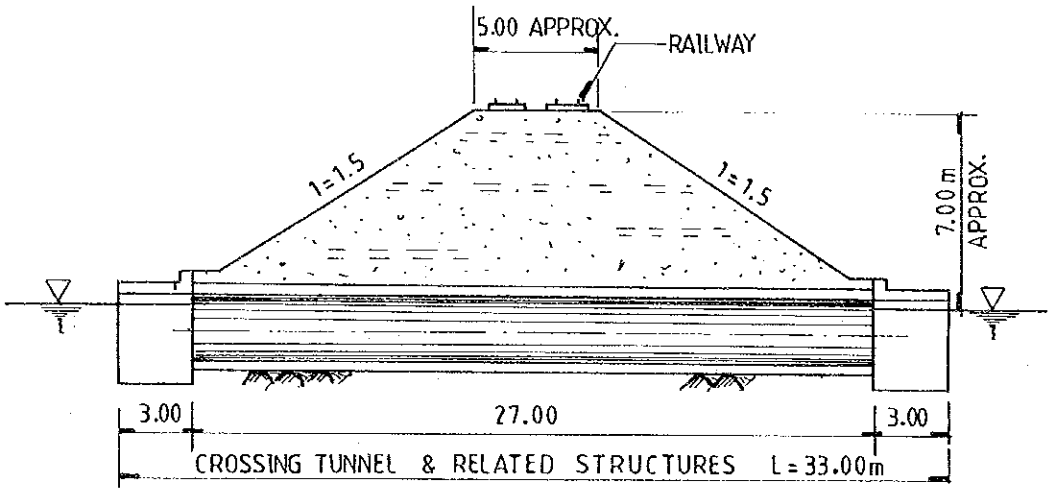

Section: A - A

Bridge NO. 30 (Secretaris river)

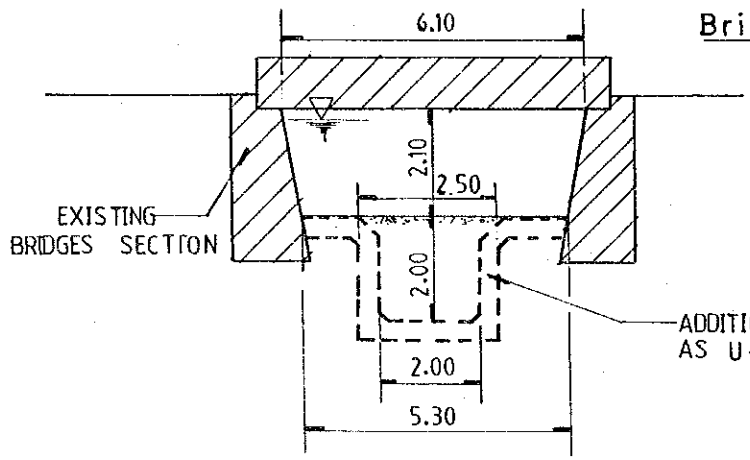

SURFACE AREA OF WATERWAY REGARD AS BRIDGE

$A = 2,50 \times 60,00 = 150,00\ m^2$

FIG. G.18(4) PROPOSED CROSS SECTION OF BRIDGE IMPROVEMENT

Bridge NO. 78 (Mampang river (1)

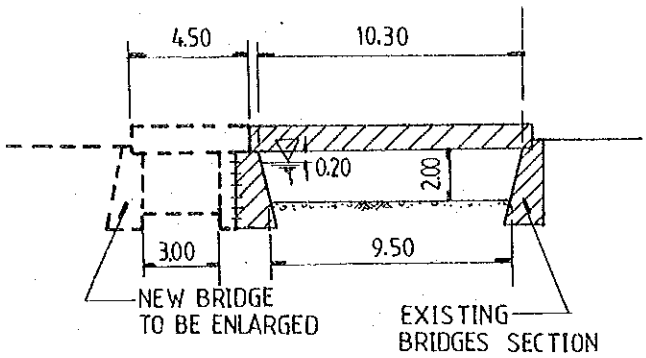

NEW BRIDGES DIMENTION TO BE ENLARGED

Bridges Length (L) = 4.50m

Bridges Width (W) = 5.00m

Bridges surface Area (A) = 22.50m^2

Scale. 0 1 2 3 4 5 6 7m

Bridge NO. 79 (Mampang river (2)

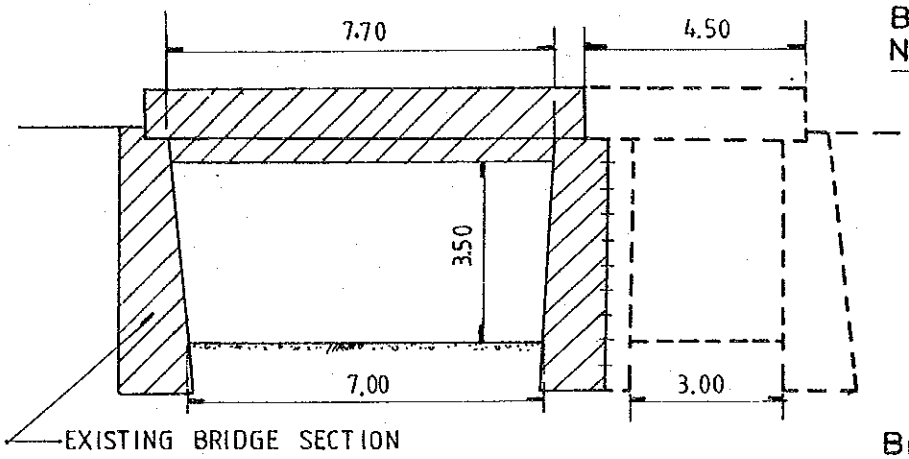

NEW BRIDGE

L = 4.50 m

W = 5.00 m

A = 22.50 m^2

Bridge NO. 80 (Mampang river (3)

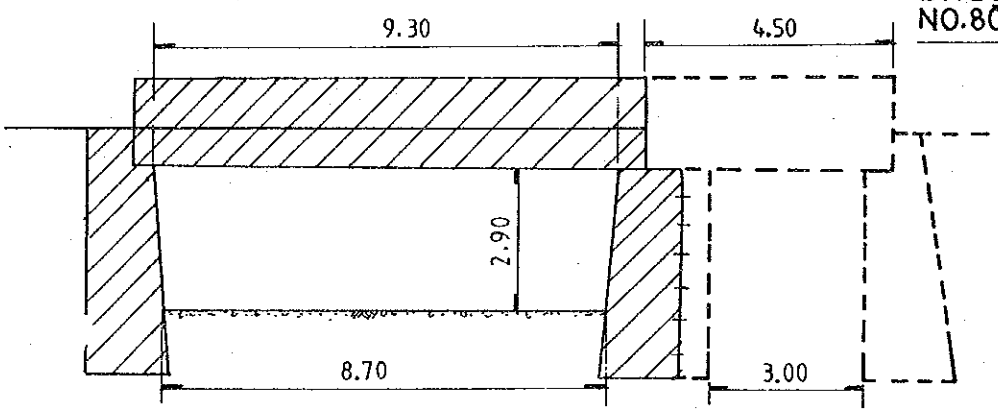

NEW BRIDGE

L = 4.50 m

W = 5.00 m

A = 22.50 m^2

Bridge NO. 82 (Mampang river (4)

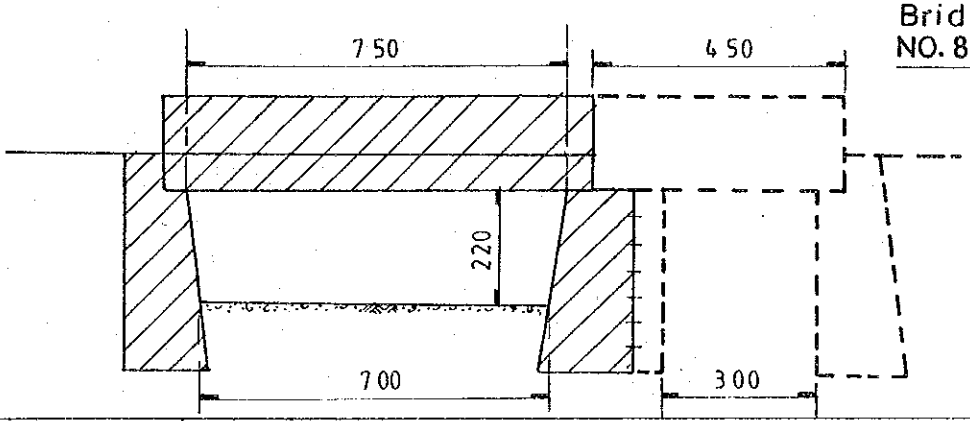

NEW BRIDGE

L = 4.50 m

W = 5.00 m

A = 22.50 m^2

FIG. G.18(5) PROPOSED CROSS SECTION OF BRIDGE IMPROVEMENT

THE STUDY ON URBAN DRAINAGE AND WASTE WATER DISPOSAL PROJECT IN THE CITY OF JAKARTA

JICA A.D 1991

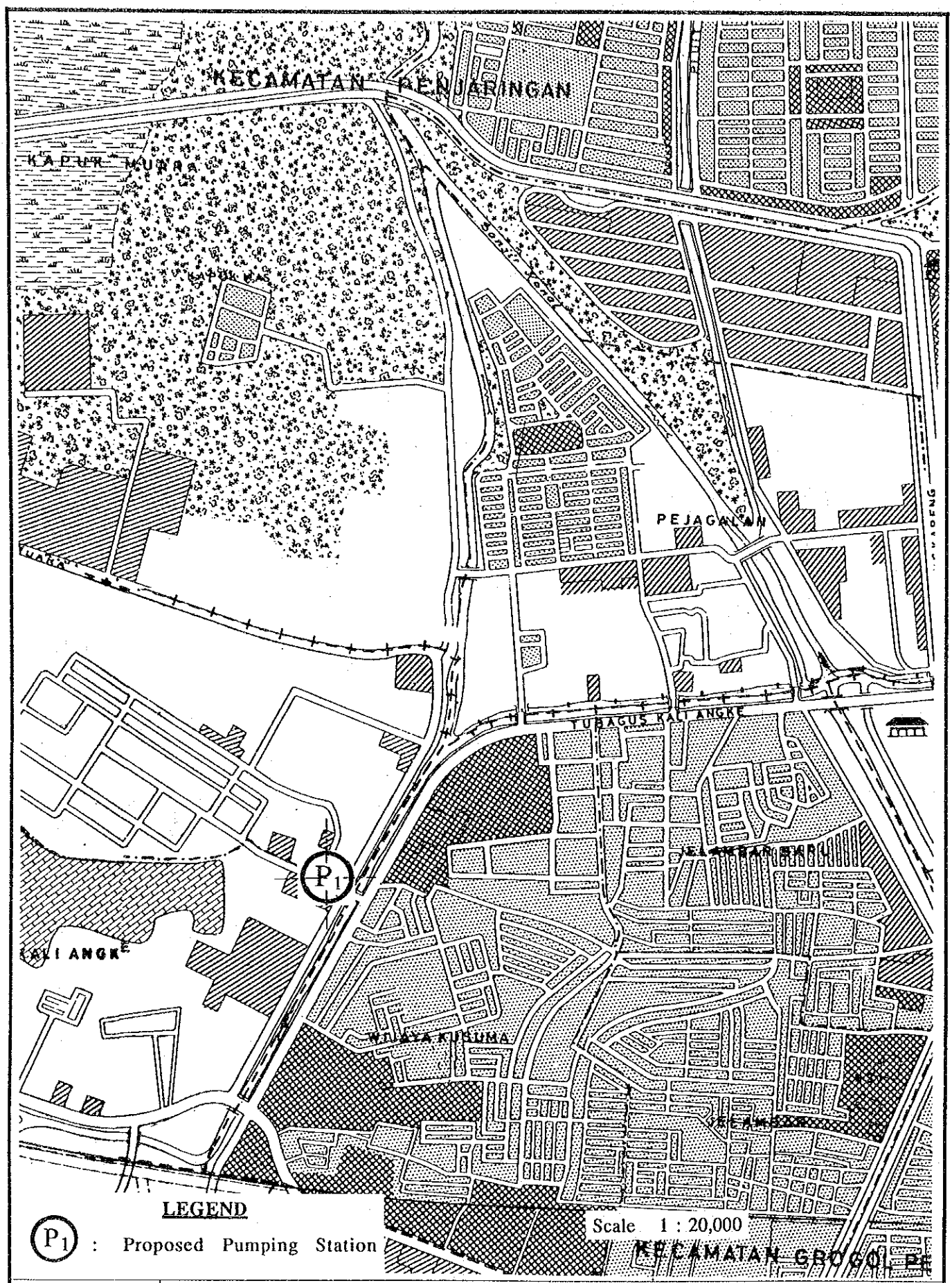

FIG. G.19 (1) LOCATION MAP OF PUMP STATION DEVELOPMENT PLAN

THE STUDY ON URBAN DRAINAGE AND WASTE WATER DISPOSAL PROJECT IN THE CITY OF JAKARTA

JICA A.D 1991