10.4 Electrical Equipment

The specifications and equipment layout for the Stage II Project are to be designed on the basis of the Stage I Project in consideration of efficient use of common facilities and ease of operation and maintenance.

10.4.1 Outline of Electromechanical Equipment

(1) Pump-Turbine

Type : Reversible vertical-type Francis pump-turbine
Number: 2 units

(a) Turbine Mode

	(Max.)	(Normal)	(Min.)
Effective head (m)	287.2	282.0	278.4
Discharge (m^3/s)	60.7	62.0	61.6
Output (MW)	154	154	150
Rotating speed (rpm)	360	360	360
Specific speed (m-kW)	119.4	122.3	122.6

(Note) Discharge is approximate

(b) Pump Mode

	(Max.)	(Min.)
Net pump head (m)	291.4	283.8
Pump discharge (m^3/s)	47.4	49.9
Input (MW)	152	155
Rotating speed (rpm)	360	360
Specific speed (m-m^3/s)	35.1	36.8

(Note) Pump discharge is approximate

(2) Generator-Motor

Type	3-ph, AC, synchronous Generator-motor
Number	2 units
Generator output (MVA)	167
Motor output (MW)	155
Voltage (kV)	13.8
Frequency (Hz)	60
Rotating speed (rpm)	360
Number of poles	20
Power factor	Generator 0.90 (lagging)
	Motor 0.95 (leading)
Short-circuit ratio	1.0

(3) Main Transformer

Type	Outdoor, 3-ph, forced oil, air-cooled
Number	2 units
Capacity (MVA)	167
Voltage (kV)	230/13.8
With on-load tap changer	

10.4.2 Pump-up Starting System

The pony motor starting system is to be adopted as main with a back to back starting system as back-up for the Stage II Project simularly to Stage I.

The specifications of the pony motor starting system are given below.

Type	3-ph, induction motor
Number	2 units
Motor output (MW)	11
Voltage (kV)	4.16
Frequency (Hz)	60
Rotating speed (rpm)	400
Number of poles	18

10.4.3 Control and Protective Relay Device

Conventional types (stationary analog) will be adopted for the Turbine Governor (GOV) and Automatic Voltage Regulator (AVR) and protective relaying devices. On the other hand, with regard to automatic operation and control devices, Programmable Logic Controller (PLC) will be adopted.
The operating mode is to be the following, similarly to Stage I.

(a) Generating operation
(b) Condenser operation
(c) Pumping operation (pony motor starting and back to back starting)
(d) Spinning reserve operation at pumping mode (ditto)
(e) Generating-pumping (pumping-generating) changeover operation

10.4.4 Transportation

Transportation of large articles, similarly to the Stage I Project, is to be carried out by barge utilizing the Pasig River which flows from Laguna de Bay, the lower reservoir, to the port of Manila.
A cargo landing dock and the previously-mentioned crane are available for unloading of generating facilities such as pump-turbine, generator-motor, transformer etc. for the Stage II Project. Transportation from the dock to the service building would be by trailer truck.

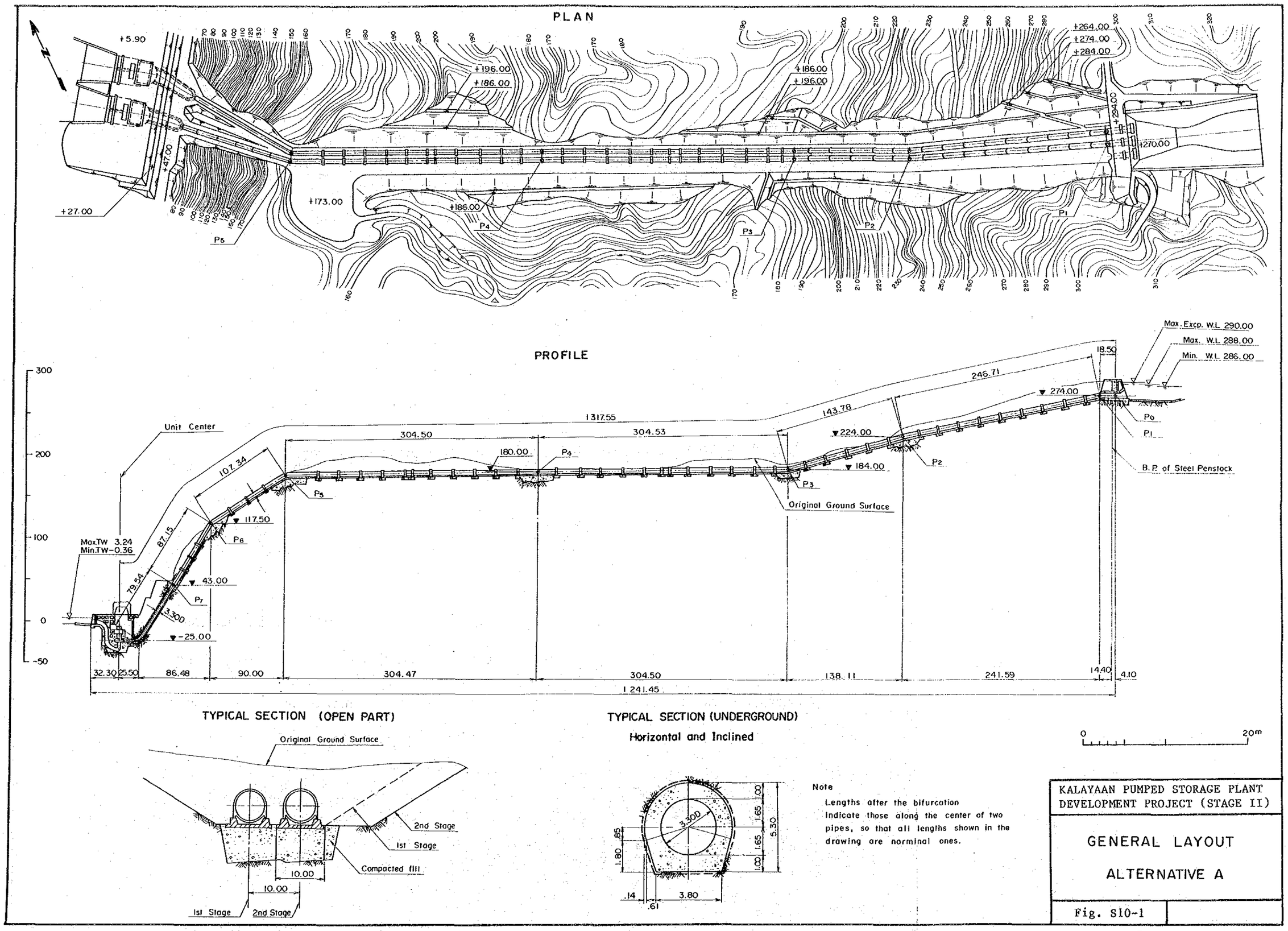
PLAN
+5.90
+27.00
+47.00
+173.00
+196.00
+186.00
+264.00
+274.00
+284.00
+294.00
+270.00
P1
P2
P3
P4
P5
PROFILE
Max. Excp. W.L. 290.00
Max. W.L. 288.00
Min. W.L. 286.00
Unit Center
MaxTW 3.24
MinTW-0.36
107.34
87.15
79.54
3.300
1317.55
304.50
304.53
143.78
246.71
18.50
180.00
117.50
43.00
-25.00
224.00
184.00
274.00
P0
P1
P2
P3
P4
P5
P6
P7
B.P. of Steel Penstock
Original Ground Surface
32.30
25.50
86.48
90.00
304.47
304.50
138.11
241.59
14.40
4.10
1 241.45
TYPICAL SECTION (OPEN PART)
Original Ground Surface
2nd Stage
1st Stage
Compacted fill
10.00
10.00
1st Stage
2nd Stage
TYPICAL SECTION (UNDERGROUND)
Horizontal and Inclined
3.300
.85
1.80
1.00
1.65
1.65
1.00
5.30
.14
.61
3.80
Note
Lengths after the bifurcation indicate those along the center of two pipes, so that all lengths shown in the drawing are norminal ones.
0
20m
KALAYAAN PUMPED STORAGE PLANT
DEVELOPMENT PROJECT (STAGE II)
GENERAL LAYOUT
ALTERNATIVE A
Fig. S10-1

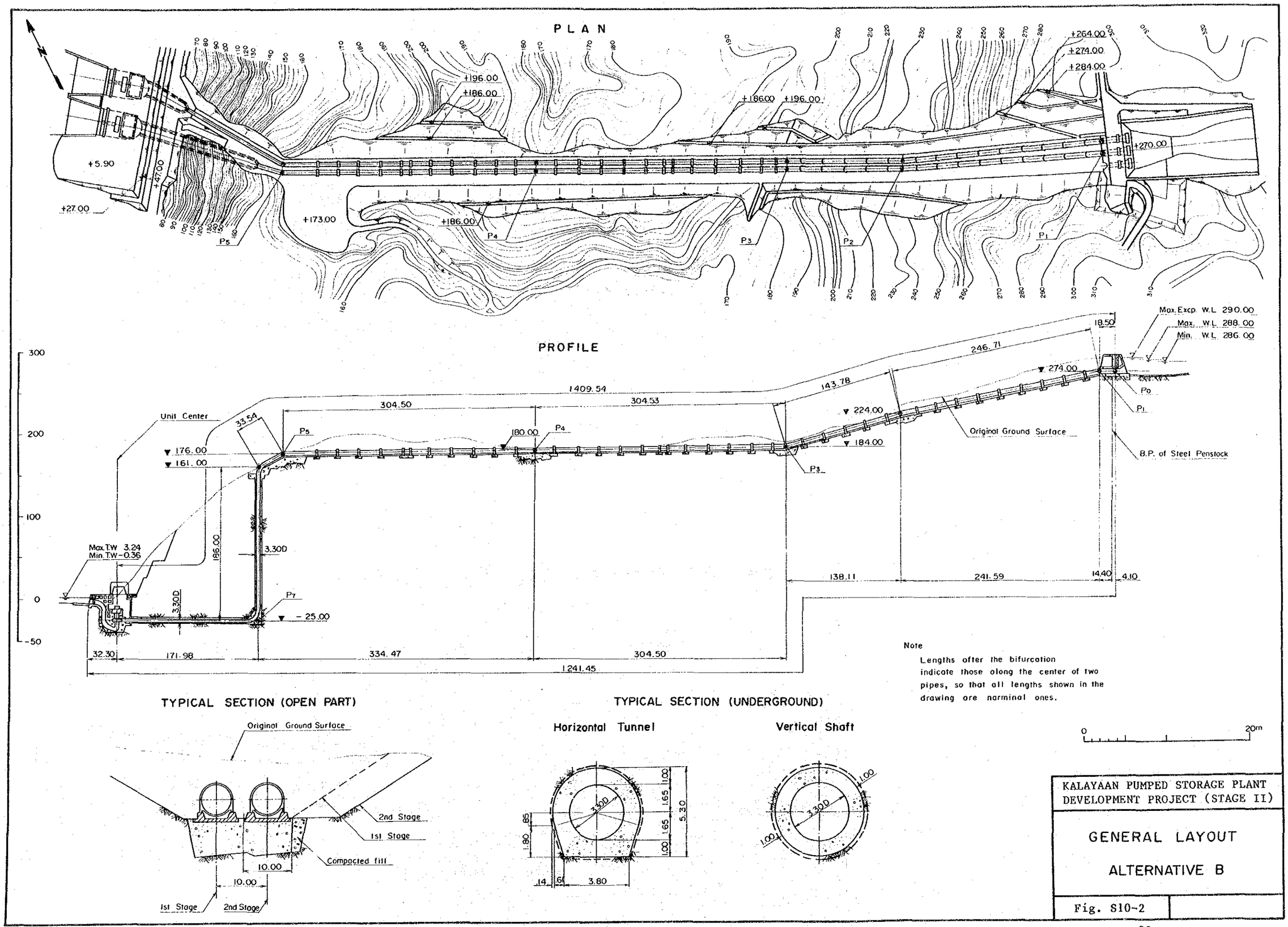
PLAN
+264.00
+274.00
+284.00
+196.00
+186.00
+186.00 +196.00
+270.00
+5.90
+47.00
+27.00
+173.00
+186.00
P5
P4
P3
P2
P1
PROFILE
Max.Excp. W.L 290.00
Max. W.L 288.00
Min. W.L 286.00
18.50
246.71
143.78
1409.54
304.50
304.53
274.00
224.00
184.00
180.00
176.00
161.00
Unit Center
33.54
Original Ground Surface
B.P. of Steel Penstock
Max.TW 3.24
Min.TW -0.36
186.00
3.30D
- 25.00
138.11
241.59
14.40
4.10
32.30
171.98
334.47
304.50
1241.45
Note
Lengths after the bifurcation indicate those along the center of two pipes, so that all lengths shown in the drawing are narminal ones.
TYPICAL SECTION (OPEN PART)
Original Ground Surface
2nd Stage
1st Stage
Compacted fill
10.00
10.00
1st Stage
2nd Stage
TYPICAL SECTION (UNDERGROUND)
Horizontal Tunnel
Vertical Shaft
3.30D
1.00
1.65
5.30
1.80
.85
.14
.6
3.80
0
20m
KALAYAAN PUMPED STORAGE PLANT
DEVELOPMENT PROJECT (STAGE II)
GENERAL LAYOUT
ALTERNATIVE B
Fig. S10-2

PLAN

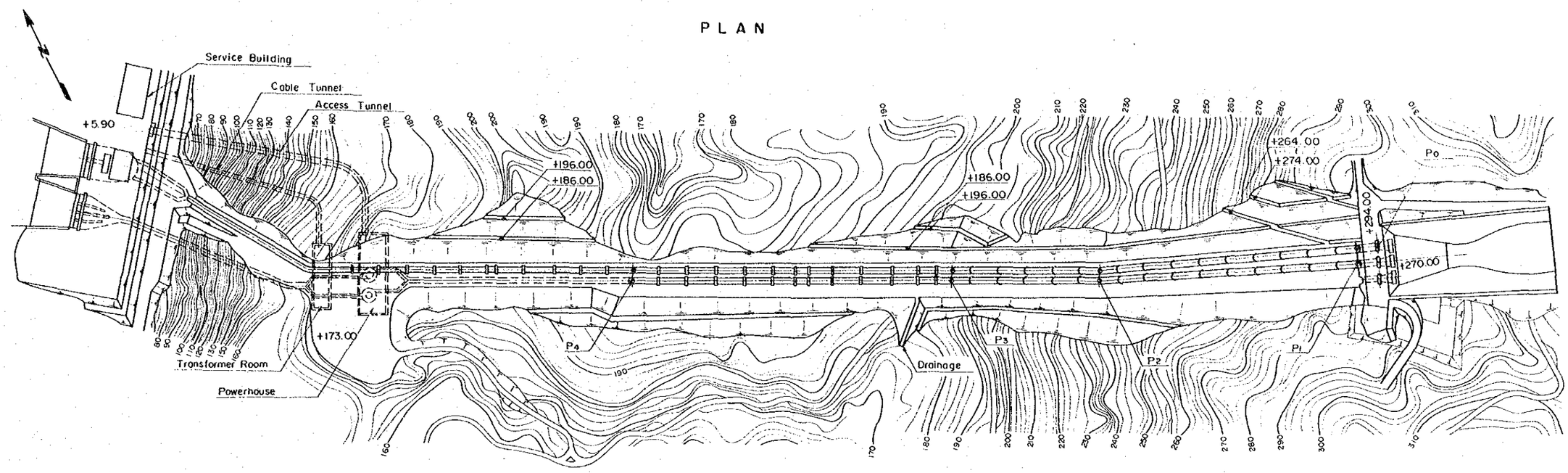

PROFILE

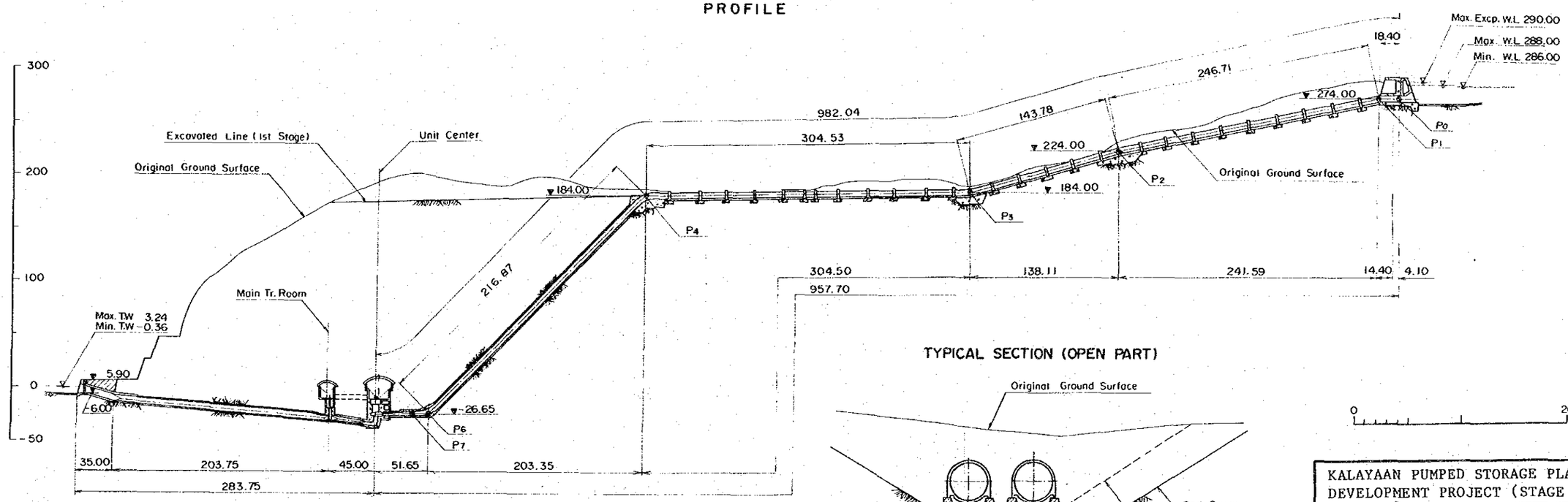

Note

Lengths after the bifurcation indicate those along the center of two pipes, so that all lengths shown in the drawing are narminal ones.

TYPICAL SECTION (OPEN PART)

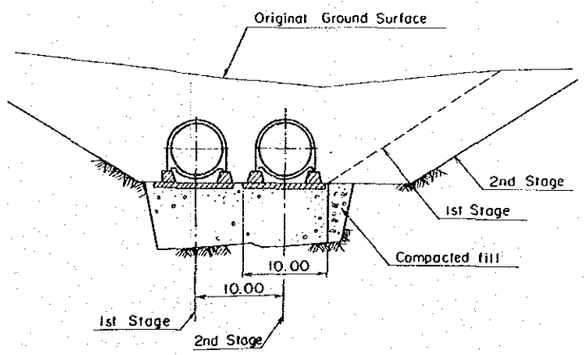

0 20m

KALAYAAN PUMPED STORAGE PLANT DEVELOPMENT PROJECT (STAGE II)

GENERAL LAYOUT

ALTERNATIVE C

Fig. S10-3

Chapter 11 Construction Schedule and Cost

11.1 Construction Plan and Schedule

11.1.1 Feature of Civil Works

The feature of the Stage II Project is that it is to be carried out extremely close by existing power generation facilities.
Accordingly, what must be paid utmost attention in construction is to execute work in a manner that no trouble at all will be caused operation and facilities of the existing power plant.
Particularly, it is necessary for attention to be given to operation and handling of heavy equipment in excavation work, and strict care must be exercised regarding vibration and flying of rock fragments caused by blasting. In this respect, facilities for protection against flying rock during blasting operations are to be provided, while concerning vibration, work must be performed keeping to a low vibration rate said to have practically no influence on existing structures.

11.1.2 Basic Conditions

Structures to be constructed in the Stage II are penstock of about 1,300 m in length, tailrace, powerhouse, switchyard and intake gates excluding intake structure constructed in Stage I.
Items which would have influences on the construction program and work schedule of the Stage II Project are the following:

(1) National Highway Detour Road

National Highway Route 321 passes by the bottom end of the steeply-sloped surface stretch of the penstock. The design excavated gradient of this slope is very steep at approximately 58 deg and the length difference of the slope is as much as 90 m. The volume of rock excavation at this part will be 35,000 m^3, the period of construction including concrete work and penstock installation approximately 20 months, and according to safety measures during construction works, traffic regulation or road blocks of the national highway will

become necessary to achieve both traffic safety and construction.

In order to avoid this cutting off of traffic and to secure the overall work schedule for the penstock, it will be necessary for a detour road and safety countermeasure to be provided for the National Highway.

The four cases below are conceivable for the detour road and safety countermeasure. The estimated cost for each measure is given in parentheses.

Case A: Detour from National Highway Route 321, pass over the intake access road and get out to the north side of Kalayaan Village by a road of 5 km (US$1,600 thousand).

Case B: Detour by a 1-lane tunnel of 5.5 m diameter approximately 265 m at the mountain side of the penstock area (US$750 thousand).

Case C: Provide a temporary bridge of approximately 90 m at the tailrace downstream of the powerhouse, pass the lake side of the substation, and with a new detour road of 2,500 m reach the national highway (US$1,200 thousand).

Case D: Traffic regulation on restricted-time basis (US$700 thousand).

The problematic points, respectively, of the above four cases may be considered to be the following:

Case A: Both construction period and construction cost are problems.

Case B: Since a tunnel would be excavated under the existing penstock, it will be necessary for the construction to be performed carefully giving thorough attention to prevailing conditions.

Case C: The route will cross over the tailrace and construction will conflict with tailrace work.

Case D: The time available for construction will be reduced to pose an influence on the overall construction period for the penstock and it will not be completely safe.

In view of the above, it is thought that Case B will be the most reasonable when taking into overall account degree of difficulty, construction period, construction cost of the detour road, and control of the job site. Accordingly, Case B is to be adopted for the detour road and safety measure concerning the National Highway.

(3) Construction Materials

(a) Cement

Cement plants near the Project site are the ones at the two towns of Norzagaroy approximately 35 km north of Manila and Binarconan on a peninsula at the west side of the northern part of Laguna de Bay. The distances from the cement plants at these towns to the Project site in case of taking the national highway at the north side of Laguna de Bay are approximately 110 and 55 km, respectively. The demand for cement in Luzon has been large in recent years, and there is a tendency for supply not being able to keep up; it will be necessary for supply of cement for construction in the Project to be made from a plural number of cement plants.

(b) Aggregates

As aggregates for concrete, the sand-gravel deposited in the vicinity of where two tributaries merge at a midstream-to-downstream part of the Balanac River, itself a left-bank tributary of the Pagsanjan River, can be utilized.

At this place, terraces are formed by sand-gravel brought down from the upstream area of the Balanac River. The thicknesses of these terraces are 3 to 5 m upward from the present river bed, the total area covered estimated to be more than 30 ha.

As another source of aggregate, there is the deposit of mainly agglomerate disintegrated and deposited at the river bed from the Lumban District at the downstream part

of the Pagsanjan River down to the mouth of the river at Laguna de Bay.

This deposited material is slightly coarse-particled for a fine aggregate for concrete, but it can be used blended with sand obtained elsewhere.

(c) Reinforcement Steel

A plant manufacturing steel bars for reinforcement is located at Novcliches 15 km northeast of Manila.

Steel bars manufactured at this plant will mainly be used for work in the Stage II Project.

The distance from Novcliches to the Project site is approximately 85 km taking the route passing the north side of Laguna de Bay.

11.1.3 Construction Plan and Schedule

Regarding the construction work of the Stage II Project, as a result of studies made considering the scale of work, layout of structures, and otherwise, the degree of progress in execution of work to be done by special methods for excavation of rock, it is thought that a construction period of 3 years and 3 months for the No. 3 unit, and 3 years and 9 months for the No. 4 unit will be required.

Assuming that the year of commissioning of the Stage II Project will be 1997, it will be necessary for preparations to be made to start work according to the following schedule:

1990 - 1 - 1990 - 11	Feasibility Study (11 months)
1990 - 11 - 1991 - 3	Provision and Award of Final Design (5 months)
1991 - 4 - 1992 - 9	Final Design (18 months)
1992 - 10 - 1993 - 3	Financing Formalities (6 months)
1993 - 4 - 1993 - 9	Bidding and Award of Contract for Construction (6 months)
1993 - 10	Start of Construction
1997 - 1 & 7	Commissioning (No. 3 unit: 39 months, No. 4 unit: 45 months)

The quantities of the principal civil works in the Stage II are as given in Table S11-1.

The construction schedule for the Stage II Project is shown in Fig. S11-1.

Table S11-1 Principal Civil Works

Item	Description	Civil Works	
Power Intake		Concrete	540 m^3
Penstock	D = 6.0 - 3.3 m L = 1,300 m	Ex. in open Shaft ex. Concrete	266,300 m^3 4,100 m^3 18,500 m^3
Powerhouse	D = 52.1 - 33.8 m H = 45.4 m	Ex. in open Ex. in shaft Concrete Drilling & Grouting	166,000 m^3 46,200 m^3 28,600 m^3 17,000 m
Tailrace		Ex. in open Dredging Concrete Reinf. conc. Diaphragm	41,300 m^3 220,000 m^3 2,000 m^3 2,000 m^2
Switchyard		Ex. in open Concrete	300 m^3 500 m^3

11.2 Estimated Construction Cost

11.2.1 Fundamental Matters

The construction cost of the Stage II Project was estimated based on the design and construction methods, materials and products in accordance with the technology level that can be expected at the present time and considering the geological conditions of the Project sites, regional conditions, project scale, etc.

The cost estimate was based on prices as of January 1990, and for the purpose of calculations in this Report, an exchange rate of US$1.00 = P22.50 was used.

The estimated items for the Stage II Project are as listed below. As for the costs of rehabilitation work on Caliraya Dam, in addition to making a review of the amount of increase resulting from inflation from 1986 to January 1990, interest during construction was taken into account and the total construction cost calculated.

(1) Estimation Items

(a) Civil Works

- Camp Facilities: offices and lodging facilities
- Temporary Facilities: access roads, national highway detour road, electric distribution lines for construction works
- Waterway structures: intake, penstock, tailrace
- Powerhouse and switchyard: civil and building works

(b) Hydraulic Equipment: gates, penstocks, etc.

(c) Electromechanical Equipment: pump-turbine, generator-motor, control device, switchyard equipment, etc.

(d) Dredger: dredger, pumps and soil delivery pipes

(e) Engineering and Administrative Cost: planning, coordination, administration and management, etc.

(f) Interest during Construction: interest during the construction period

(2) Estimating Criteria

(a) Civil Works

For unit price of civil works and hydraulic equipment, comparison studies were made of recent unit construction costs of NAPOCOR, unit construction prices at project sites under construction or for which feasibility studies have been completed in the Philippines, and unit construction prices at similar sites in Japan, and these were broken down according to construction procedures and estimations were made taking into consideration labor costs, construction materials and machinery costs, etc. in the Philippines.

(b) Hydraulic Equipment

Penstocks, intake gates, tailrace gates, etc., would be imported.

(c) Electrical Equipment

Electrical equipment such as pump-turbines, generator-motors, transformers, etc., are all to be imported. Outdoor steel structures are also to be imported.

(d) Dredger

Of the dredger and soil delivery pipes required for maintenance of the lower channel of the tailrace, pumps would be imported from abroad and are to be included under foreign currency requirements.
The barge and the delivery pipes are to be domestically produced and thus be covered with local currency.

(e) Engineering and Administrative Cost

Construction management cost is generally around 10 to 15 percent of (a) - (d) costs, but since dam construction, which generally occupies a large portion of project cost is not included in the Stage II Project, 6 percent of (a) - (d) costs was considered to be appropriate in this case.

(f) Compensation Cost

The land for the Project is owned either by NAPOCOR or by the state. According to the results of field investigations there are no water utilization rights or fishery rights in the area which need to be compensated. Consequently, as a result of discussions with NAPOCOR, compensation costs will not be included.

(g) Interest during Construction

As a result of discussions with NAPOCOR, interest during construction is to be calculated at 6.33 percent per annum for foreign currency and 20 percent per annum for local currency.

(h) Import Duties and Various Taxes

Import duties on construction machinery, gates, steel pipes, turbines, generators, etc., which must be imported will not be included in view of the fact that the Stage II is a national project. However, amounts corresponding to import duties on the above will be calculated for reference purposes.

(i) Contingencies

As a result of discussions with NAPOCOR, 10 percent of foreign currency requirements and 15 percent of local currency requirements in the civil works construction cost are to be included for contingencies.

With regard to gates, penstock, and electrical equipment, only 5 percent of foreign currency requirements is to be included.

11.2.2 Estimated Construction Costs

Local and foreign currency requirements and construction costs per year of the approximate construction cost for the Stage II Project and the rehabilitation cost for Caliraya Dam are given in Tables S11-2, S11-3, S11-4, and S11-5, respectively.

Table S11-2 Investment Cost

(10^3 US$)

Item	Amount		
	F. C.	L. C.	Total
1. Stage II Project	107,351.9	63,621.3	170,973.2
2. Rehabilitation Works for Caliraya Dam	4,820	5,598	10,418
Total	112,171.9	69,219.3	181,391.2

Table S11-3 Estimated Construction Cost

Unit: 10^3 US$

Item	Foreign Currency	Local Currency	Total
Preparation Works			
Camp Facilities	100	900	1,000
Access Road	0	300	300
Temporary Detour Road	380	370	750
Sub-total	480	1,570	2,050
Civil Works			
Upper Canal	62.4	7.6	70
Power Intake	20.4	77.9	98.3
Penstock	1,929	5,070	6,999
Powerhouse	5,487.3	10,054.9	15,542.2
Switchyard	21.2	77.8	99.0
Tailrace and Lower Canal	1,741.9	1,885.1	3,627.0
Sub-total	9,262.2	17,173.3	26,435.5
Hydraulic Equipment	16,701	13,749	30,450
Electromechanical Equipment	60,400	5,800	66,200
Dredger Boat	50	700	750
Project Controlling			
Engineering Fee	4,000	150	4,150
Administration Cost	0	3,400	3,400
Sub-total	4,000	3,550	7,550
Physical Contingency			
Preparation Works	48	235.5	283.5
Civil Works	926.2	2,576	3,502.2
Hydraulic Equipment	835	0	835
Electromechanicasl Equipment	3,020	0	3,020
Dredger Boat	2.5	0	2.5
Project Controlling	400	532	932
Sub-total	5,231.7	3,343.5	8,575.2
Total (Project Cost)	96,124.9	45,885.8	142,010.7
Interest during Construction (Interest FC: 6.33%, LC: 20%)	11,227.0	17,735.5	28,902.5
Grand Total (Investment Cost)	107,351.9	63,621.3	170,973.2

Table S11-4 Fund Requirement in Each Year (1/2)

(Unit : 10^3LSS)

F : Foreign Currency
L : Local Currency
T : Total

Item \ Year		1991	1992	1993	1994	1995	1996	1997	Total	Remarks
Preparation Works	F	0	0	167.9	295.5	7.6	0	9	480	
	L	0	0	675.7	805.9	7.4	0	81	1,570	
	T	0	0	843.6	1,101.4	15.0	0	90	2,050	
Civil Works	F	0	0	7.6	15.7	15.7	15.7	7.7	62.4	
Uppar Canal	L	0	0	0.9	1.9	1.9	1.9	1	7.6	
	T	0	0	8.5	17.6	17.6	17.6	8.7	70	
Power Intake	F	0	0	2.08	18.32	0	0	0	20.4	
	L	0	0	8.37	69.53	0	0	0	77.9	
	T	0	0	10.45	87.85	0	0	0	98.3	
Penstock	F	0	0	271.05	992.86	455.15	209.94	0	1,929	
	L	0	0	743.97	2,245.74	1,193.03	887.26	0	5,070	
	T	0	0	1,015.02	3,238.6	1,648.18	1,097.20	0	6,999	
Powerhouse	F	0	0	716.17	3,595.91	910.49	257.31	7.42	5,487.3	
	L	0	0	1,327.66	3,496.26	4,347.49	840.66	42.83	10,054.9	
	T	0	0	2,043.83	7,092.17	5,257.98	1,097.97	50.25	15,542.2	
Switchyard	F	0	0	2.13	0	0	19.07	0	21.2	
	L	0	0	8.38	0	0	69.42	0	77.8	
	T	0	0	10.51	0	0	88.49	0	99	
Tailrace and Lower Canal	F	0	0	174.19	0	860.56	707.15	0	1,741.9	
	L	0	0	188.51	0	929.27	767.32	0	1,885.1	
	T	0	0	362.7	0	1,789.83	1,474.47	0	3,627	
Sub-Total	F	0	0	1,173.22	4,622.79	2,241.9	1,209.17	15.12	9,262.2	
	L	0	0	2,277.79	5,813.43	6,471.69	2,566.56	43.83	17,173.3	
	T	0	0	3,451.01	10,436.22	8,713.59	3,775.73	58.95	26,435.5	

Table S11-4 Fund Requirement in Each Year (2/2)

(Unit : 10^3US$)

F : Foreign Currency
L : Local Currency
T : Total

Item \ Year		1991	1992	1993	1994	1995	1996	1997	Total	Remarks
Hydraulic Equipment	F	0	0	2.907	2.211.8	3.823.5	6.393.7	1.365	16.701	
	L	0	0	0	2.049.6	3.969	6.260.4	1.470	13.749	
	T	0	0	2.907	4.261.4	7.792.5	12.654.1	2.835	30.450	
Electromechanical	F	0	0	4.480	5.600	19.600	21.960	8.760	60.400	
Equipment	L	0	0	0	0	0	3.300	2.500	5.800	
	T	0	0	4.480	5.600	19.600	25.260	11.260	66.200	
Dredger* Boat	F	0	0	0	0	10	40	0	50	
	L	0	0	0	0	140	560	0	700	
	T	0	0	0	0	150	600	0	750	
Total(Direct Cost)	F	0	0	8.728.12	12.730.09	25.683	29.602.87	10.149.12	86.893.2	
	L	0	0	2.953.49	8.668.93	10.588.09	12.686.96	4.094.83	38.992.3	
	T	0	0	11.681.61	21.399.02	36.271.09	42.289.83	14.243.95	125.885.5	
Project Management	F	572	468	486.3	666	761.1	761.1	285.5	4.000	
	L	0	0	250.6	942.7	942.7	942.7	471.3	3.550	
	T	572	468	736.9	1.608.7	1.703.8	1.703.8	756.8	7.550	
Physical Contingency	F	0	104	165.9	576.9	300.3	1.034.5	3.050.1	5.231.7	
	L	0	0	379.1	1.248.8	1.112.1	526.3	77.2	3.343.5	
	T	0	104	545	1.825.7	1.412.4	1.560.8	3.127.3	8.575.2	
Total(Project Cost)	F	572	572	9.380.32	13.972.99	26.744.4	31.398.47	13.484.72	96.124.9	
	L	0	0	3.583.19	10.860.43	12.642.89	14.155.96	4.643.33	45.885.8	
	T	572	572	12.963.51	24.833.42	39.387.29	45.554.43	18.128.05	142.010.7	
Interest during	F	18.1	54.3	369.3	1.108.4	2.397.1	4.237.4	3.042.4	11.227	
Costruction	L	0	0	358.3	1.802.7	4.153	6.832.9	4.588.6	17.735.5	
	T	18.1	54.3	727.6	2.911.1	6.550.1	11.070.3	7.631	28.962.5	
Grand Total	F	590.1	626.3	9.749.62	15.081.39	29.141.5	35.635.87	16.527.12	107.351.9	
(Investment Cost)	L	0	0	3.941.49	12.663.13	16.795.89	20.988.86	9.231.93	63.621.3	
	T	590.1	626.3	13.691.11	27.744.52	15.937.39	56.624.73	25.759.05	170.973.2	

Table S11-5 Fund Requirement for Rehabilitation Works of Caliraya Dam

Unit : US$

Item \ Year	-1st year			1st year			2nd year			Total			Remarks
	F. C	L. C	Total	F. C	L. C	Total	F. C	L. C	Total	F. C	L. C	Total	
1. Direct Cost													
Rehabilitation Works for Existing Spillway for Common Use	0	0	0	20.000	159.200	179.200	0	0	0	20.000	159.200	179.200	
Changing of gate	0	0	0	0	0	0	80.000	9.500	89.500	80.000	9.500	89.500	
Build Additional Spillway	0	0	0	875.600	847.800	1.723.400	1.662.400	1.681.100	3.343.500	2.538.000	2.528.900	5.066.900	
Rehabilitation Works for Land-slide Place at East Side	0	0	0	0	91.600	91.600	0	0	0	0	9.160	91.600	
Rehabilitation Works for Down-stream Surface of Dam	0	0	0	313.200	363.700	676.900	0	0	0	702.000	815.100	1.517.100	
Rehabilitation Works for Up-stream Surface of Dam	0	0	0	0	0	0	56.000	305.000	361.000	56.000	305.000	361.000	
Total	0	0	0	1.208.800	1.462.300	2.671.000	2.187.200	2.447.000	4.634.200	3.396.000	3.909.300	7.305.300	
2. Site Investigation Works	0	85.500	85.500	0	0	0	0	0	0	0	85.500	85.500	
3. Compensation Cost	0	0	0	0	190.000	190.000	0	0	0	0	190.000	190.000	Quarry site Area 10ha
4. Engineering Fee	118.000	0	118.000	354.000	0	354.000	354.000	0	354.000	826.000	0	826.000	
5. Administration Cost	0	22.400	22.400	0	67.200	67.200	0	67.200	67.200	0	156.800	156.800	
6. Physical Contingency	0	0	0	2.000	25.000	27.000	337.600	365.900	703.500	339.600	390.900	730.500	
7. Interest during Construction	3.700	10.900	14.600	57.000	196.100	253.100	197.700	658.500	856.200	258.400	865.500	1.123.900	F.C : 6.33%, L.C : 20%
8. Grand Total (Investment Cost)	121.700	118.800	240.500	1.621.800	1.940.600	3.562.400	3.076.500	3.538.600	6.615.100	4.820.000	5.598.000	10.418.000	

Item	Quantity
Camp Facilities	
Access Road	L. = 1.300 m
Temporary Detour Road	L. = 265 m
Upper Canal	Measurment of Land Slide L.S
Power Intake	Remove plug L.S
	Concrete 540 m³
Penstock	Excavation 266.300 m³
	Tun. Excavation 4.100 m³
	Concrete 15.900 m³
	Tun. Concrete 2.600 m³
Powerhouse	Excavation 166.000 m³
	Shaft Excavation 46.200 m³
	Concrete 28.600 m³
	Drilling & Grouting 17.000 m³
Tailrace	Excavation 41.300 m³
	Concrete 2.000 m³
	Reinf. Diaphragm Conc. 2.000 m³
Lower Canal	Dreding 220.000 m³
Switchyard	Excavation 300 m³
	Concrete 500 m³
Hydraulic Equipment	Intake Gate 2 Units
	Penstock L. = 1.300 m
Electromechanical Equipment	No.3 Unit
	No.4 Unit
Dreger Bost	900PS pump 1 Unit
Remarks	

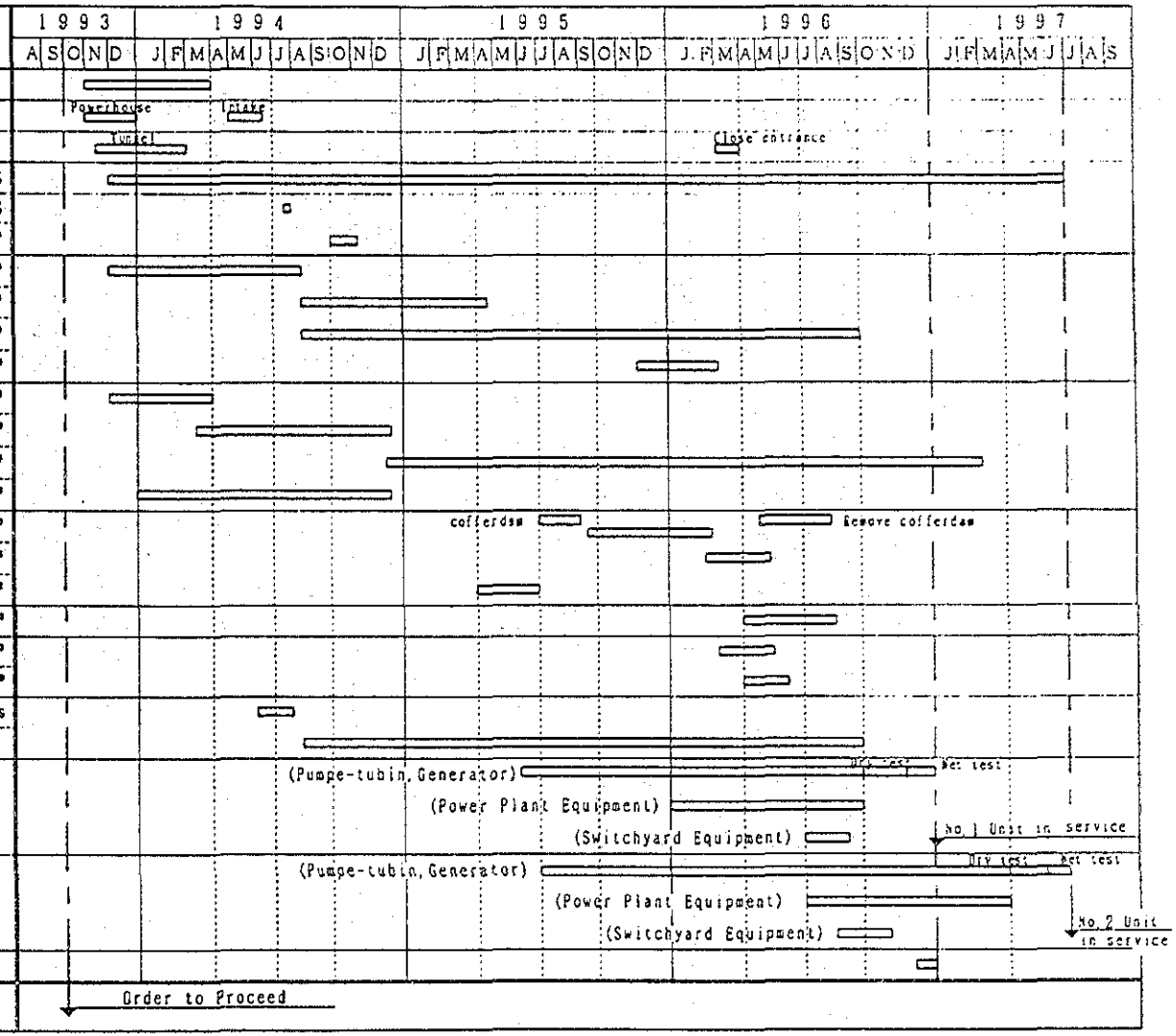

Fig. S11-1 Construction Schedule

Chapter 12 Environmental Assessment

12.1 Present Conditions

The physical environment of the Kalayaan Project includes Laguna de Bay and Caliraya lake, the intermediate mountains and all infrastructures existing in the proximity and between the two lakes, with a total population around 1,000,000 people.

The basic environmental problem of this area is the increasing pollution of Laguna de Bay, caused by human, industrial and agricultural activities in all of the catchment area. In this framework, the main environmental impact of the Kalayaan Project (the existing Stage I and the proposed Stage II) is the "transfer of pollution" from Laguna de Bay to Caliraya Reservoir.

In this respect, the specific environmental impact of Stage II will be marginal, if compared with the effects already produced by the existing plant: in effect, the operation of the Stage II Project will only modify the volumes of water interchanged daily between the two lakes, while the total weekly fluctuations of the water level in Caliraya will remain unchanged.

In order to assess proper mitigation measures, it is therefore necessary to consider the overall environmental impact, consequent to the operation of Stage I plus Stage II.

A significant reduction of the pollution of Laguna de Bay will be the best way to solve also the environmental problem induced by the operation of the Kalayaan Project. However, it would require comprehensive control of all pollution sources in the entire catchment.

If a solution of the main environmental problem caused by the operation of Kalayaan is to be attempted under the present conditions of Laguna de Bay, the first target will be reducing the area of influence of the Project to a manageable degree, where effective mitigation measures may be produced.

12.2 Mitigation Measures for environmental Impact

The only possibility to achieve such a manageable degree appears to be to bound a portion of Laguna de Bay, which will then be acting as the lower reservoir of the Kalayaan Project, and operate based on it. In this area water quality reclamation measures could be adopted, thus resulting in an interchange of clean waters with Caliraya lake. This goal, which is certainly outside the scope of the present Study, is being pursued with medium- and long-term programs, not related to the Kalayaan Project, being considered by the Laguna Lake Development Authority (LLDA).

To achieve this target, two major measures are conceivable.

- Partitioning off of a portion of Laguna lake, by means of a dike constructed in a proper configuration, thus forming a downstream reservoir for the plant's operation;

- Launching a lake restoration program in the lower reservoir, target of which will be the improvement of water quality and limnological lake conditions.

To dike axis could be located between the Pila and Santa Cruz river outlets on the southeast side, and the Naglabas and Lubo areas on the northwest side. The corresponding extension of the lower reservoir will be about 100 km^2 (1/9 of the whole Laguna de Bay extension), with weekly water level variations not exceeding 20 cm.

The total dike's length will be around 5.5 km. The dike's main body will be interrupted by a mobile barrage of about 250 m length, made with floating or sinking steel elements, to permit the passage of large barges and discharge of floods.

One or two navigation channels, allowing the passage of fishermen's boats, will by-pass the dike, interconnecting the main lagoon's body with the lower reservoir.

To achieve the target of restoring the inside waters, implementation of the eco-technology known as "Wetlands" is suggested.

This technology consists of the purification of polluted waters by some species of plants, through their roots apparatus and developing

specific bacterial activity. The efficiencies of these systems, when correctly planned and operated, will reach 60 - 70% in terms of nutrients (nitrogen and phosphorous) retention, and up to 90% in terms of turbidity abatement.

It needs shallow waters, with slight salinity and a slight tidal regime, and the lower reservoir (the whole Laguna), should be a particularly suitable environment.

While it is clear that such a program is not intended to solve the overall pollution problem of the entire Laguna de Bay, its success may represent an important contribution and a pilot experience for the medium- and long-term programs of the Laguna Lake Development Authority.

On the other hand, the proposed splitting of Laguna de Bay will raise environmental problems of its own, which must be fully studied and solved before the program is actually implemented.

In this respect, the main aspects of additional studies required are:

- Hydrodynamic behavior and possible modifications of the water quality of the entire Laguna de Bay once the separation dike is built.

- Socioeconomic problems raised by the proposed splitting of the lake.

- Review and possible strengthening of the existing Authority in charge of Laguna de Bay.

- Design of the dike itself and of its appurtenant structures.

In addition, the specialized technology to be applied for the water purification program must be studied and optimized through extensive field experiments.

Continuous monitoring of both Laguna de Bay and Caliraya lake will be needed, and the use of an overall Lake Evaluation Index (LEI) is suggested.

Other than the water quality problem discussed, other environmental impacts of the overall Project (Stage I plus Stage II) are minor.

Some minor mitigation measure is suggested in any event, as tree planting along the Caliraya lake shores, to limit soil erosion consequent to the continuous water level variations, or along the penstock alignment, also to prevent soil erosion and to improve aesthetics and safety.

The implementation of the suggested program will require a period of five years, including three years devoted to studies and field investigations and experiments.

A preliminary estimate of the cost of the proposed program, to be reassessed at a more advanced stage, gives a total amount in the order of US$ 6.0 Millions (30% foreign and 70% local currency). This cost represents about 4% of the investment required for Stage II.

Chapter 13. Economic Evaluation

13.1 Methods of Economic Evaluation

The economic evaluation for the Stage II Project has been made according to;

1) Benefit/Cost Method
2) Equalizing Discount Rate Method.

The total costs of the Stage II Project and its alternative project were calculated respectively for their specified time periods from the beginning of work to the last year of the depreciation period of operation. Then conversion was made from the said total costs into their cumulative present values. The Benefit/Cost Method was used for finding whether a ratio of benefit/cost of the Stage II Project exceeds 1.0 or not.

The other method is to obtain an "Equalizing Discount Rate" which equalizes the present values of cumulative costs to be incurred during the specified time period of operation of the pumped storage power project and that of its alternative project counted from the commencement of work of the Stage II Project. This method was also used to know if the discount rate obtained in the above manner exceeds a social discount rate of 15% which reflects an "opportunity cost of capital" prevailingly applied to economic evaluation of projects in the power sector in the Philippines.

13.2 Salient Features for Benefit/Cost Calculations

The assumptions taken up for necessary calculations are as follows:

Table S13-1 Salient Features for B/C Calculations

Description	Stage II Project	Gas Turbine Plant Project
Output	300 MW (150 MW x 2)	376 MW (Note 1)
Annual Operation Hours	1,500 hrs.	1,500 hrs.
Annual Energy Generation	450 GWh	441 GWh (Note 2)
Station Service Rate		
- Power (kW)	0.5%	0.6%
- Energy Loss (kWh)	0.6%	0.7%
Transmission Loss Rate		
- Pumped Storage	2%	0%
- Generation	2%	0%
Forced Outage Rate	0%	8%
Scheduled Outage Rate (for Repair)	3.8%	3.8%
Max. Overall Efficiency	70%	0%
Decrease in Output due to Ambient Temperature	0%	13.2% (Design ambient temperature 37°C)
Service Life	50 years	15 years
Total Construction Cost (US$M)	141.50	137.24
Outflow of Construction Cost (US$M)		
1991	0.57	
1992	0.57	
1993	12.91	
1994	24.75	
1995	39.12	54.90
1996	45.46	61.76
1997	18.13	20.58

(Note 1) kW Adjustment Factor

$$\frac{\text{Pumped Storage Plant}}{\text{Gas Turbine Plant}} = \underbrace{\frac{(1 - 0.005)}{(1 - 0.006)}}_{\text{Station Service Loss Factor}} \times \underbrace{\frac{(1 - 0)}{(1 - 0.08)}}_{\text{Forced Outage Rate}} \times \underbrace{\frac{(1 - 0.038)}{(1 - 0.038)}}_{\text{Scheduled Outage Rate}} \times \underbrace{\frac{(1 - 0)}{(1 - 0.132)}}_{\text{Output Decrease Rate}}$$

$$= 1.254$$

Output of Alternative Gas Turbine Plant : 300 MW x 1.254 = 376 MW

(Note 2) kWh Adjustment Factor

$$\frac{\text{Pumped Storage Plant}}{\text{Gas Turbine Plant}} = \underbrace{\frac{(1 - 0.006)}{(1 - 0.007)}}_{\text{Station Service Loss Factor}} \times \underbrace{\frac{(1 - 0.02)}{(1 - 0)}}_{\text{Transmission Loss Factor}}$$

$$= 0.981$$

Energy Generation of Alternative Gas Turbine Plant:

450.0 GWh x 0.981 = 441 GWh

13.3 Benefit/Cost Ratio (Discount Rate: 15%)

The discount rate applicable for economic evaluation of projects in the power sector of the Philippines is 15%. If necessary calculations are made at this discount rate, a Benefit/Cost ratio is obtained as follows:

Table S13-2 Computation of Benefit and Cost

(In US$M)

Item	Stage 2 Project	Gas Turbine Project
(1) Daily Operation Hours	6.0 hrs.	6.0 hrs.
(2) Annual Generation Hours	1,500 hrs.	1,500 hrs.
(3) Annual Energy Generation	450.0 GWh	441.0 GWh
(4) Construction Cost	141.50	137.24
(5) Annual Operation & Maintenance Cost	1.70	1.60
(6) Annual Fuel Cost	13.17	17.30
(7) Annual Cost (= (5) + (6))	14.87	18.91
(8) Present Value of Cumulative Annual Cost (= (7) x 2.357)	35.05	44.56
(9) Present Value of Construction Cost	74.77	66.50
(10) Adjusted Present Value of Construction Cost for Stage II Project (= (9) x 0.878)	65.65	-
(11) Total Cost	(8) + (10) 100.70	(8) + (9) 111.06

As seen from Table 13-2, Benefit (B)/Cost (C) and Benefit (B) - Cost (C) are as follows:

B/C = 111.06/100.70 = 1.10

B-C = 111.06 - 100.70 = 10.36 (US$M)

The B/C ratio exceeds 1.0 at a social discount rate of 15% reflecting the opportunity cost of capital which is applied in the Philippines.

As a reference case, the Mission calculated the economic value by multiplying the foreign currency expenditures of the Stage II Project and the alternative gas turbine project with the shadow foreign exchange rate of 1.2, which is admitted by the Philippine officials

in charge of planning. Then the Mission calculated the Benefit/Cost ratio with the social discount rate of 15%. The benefit/cost ratio thereby obtained was 1.13, exceeding the value of 1.10 which was based on the market price.

13.4 Equalizing Discount Rate (EIRR)

The equalizing discount rate was obtained by calculations of the total costs of the Stage II Project and its alternative gas turbine project. The equalizing discount rate is found to be 21.15%. This rate exceeds 15% which is established as a social discount rate to reflect the opportunity cost of capital for project evaluation in the power sector in the Philippines. Accordingly, this indicates the economic viability of the Stage II Project.

Chapter 14. Financial Analysis

14.1 Loan Conditions

The loan conditions concerning foreign and local currencies used in the financial analysis are applied to 4 cases consisting of the principal case and 3 reference cases, and repayment schedules are prepared for each case.

- Principal Case (International Financing Agency A)

Loan in Foreign Currency

Interest Rate	:	6.33% per annum
Commitment Charge	:	0.75% per annum
Loan Term	:	20 years (from loan agreement date)
Grace Period	:	7 years
Repayment Period	:	13 years

- Reference Case 1 (Bilateral Official Financing Agency)

Loan in Foreign Currency

Interest Rate	:	2.70% per annum
Service Fee	:	0.1% of total loan amount
Loan Term	:	30 years (from loan agreement date)
Grace Period	:	10 years
Repayment Period	:	20 years

- Reference Case 2 (International Financing Agency B)

Loan in Foreign Currency

Interest Rate	:	7.75% per annum
Commitment Charge	:	0.75% per annum
Loan Term	:	20 years (from loan agreement date)
Grace Period	:	7 years
Repayment Period	:	13 years

• Reference Case 3 (Export-Import Bank)

Loan in Foreign Currency

Interest Rate	:	7.3% per annum
Commitment Charge	:	0.5% per annum
Loan Term	:	14 years (from loan agreement date)
Grace Period	:	7 years
Repayment Period	:	7 years

In working out funding programs in the local currency portion, an interest rate of 20% per annum was applied commonly to local funds in the four (4) cases. The loans in the local currency portion are to be repaid in 10 years from the start of operation of the power plant. Other than the above, the exchange rate is to be US$1.00 = P22.50.

14.2 Cumulative Balance for 50 Years

The repayment schedule, profit and loss, and cash flow for each of the four (4) cases were prepared. The results are shown below.

	Cumulative Balance for 50 years
Principal Case	+ US$74.045 Millions
Reference Case 1	+ US$94.184 Millions
Reference Case 2	+ US$59.481 Millions
Reference Case 3	+ US$94.042 Millions

14.3 Rate of Return of Stage II Project

The ratios between fixed assets in operation and operating income (Profit) are as shown in the following table.

(%)

Item \ Period	10 Yrs Average	20 Yrs Average	30 Yrs Average	40 Yrs Average	50 Yrs Average	Order
Principal Case	2.363	2.658	3.038	3.545	4.253	3
Reference Case 1	2.604	2.962	3.385	3.950	4.740	1
Reference Case 2	2.298	2.585	2.954	3.447	4.136	4
Reference Case 3	2.423	2.726	3.116	3.635	4.362	2

14.4 Unit Price of Electricity to Obtain an FIRR of 15%

In the Study the income and cost of each year is assumed to be constant for 50 years from the commencement of operation of the Stage II. The figures of the construction cost, OM cost and fuel cost were converted into the cumulative present values thereof at the beginning of the year of 1991 when work for the Stage II Project is expected to commence. As a result, the cumulative present value of "Cost" amounted to US$114.70 Millions. The unit price of electricity per kWh in case of 450 GWh available at the generation end amounted to P2.13584.

JICA