調査報告書
及び
相手側コメント

FIELD SURVEY REPORT
ON
RURAL ELECTRIFICATION PROJECT
IN WESTERN SAMOA

It is intended to confirm the following results of the site survey and study made by the Basic Design Study Team of JICA on the Rural Electrification Project.

1. Scope of Project

During site survey of the proposed Project areas with EPC Engineers, it has been found that the following distribution lines in Upolu and Savaii islands will be undertaken by the Japanese Grant Aid, the length of the lines are provisional length which will be finalized referring to the 1/20,000 maps during basic design study:

a. Upolu Island	22 kV Lines	HV/LV Lines	LV Lines	Priority
Tanugamanono - Siumu	16 km	9 km	3 km	1
Lotofaga - Amaile	7 km	15 km	21 km	2
Saluafata - Sauniatu	3 km	4 km	7 km	5
Siusega - Tanumalala	13 km	6 km	9 km	3
Aleisa Road - Saleimoa	4 km	3 km	3 km	6
Nuu - Faleula	0 km	3 km	2 km	4
Lepale - Fasitoouta	4 km	3 km	3 km	7
Satuimalufilufi - Satapuala	5 km	8 km	7 km	8
Total Upolu Island	52 km	51 km	55 km	

b. Savaii Island	22 kV Lines	HV/LV Lines	LV Lines	Priority
Puapua - Samalaeulu	10 km	7 km	1 km	11
Sasina - Matavai	16 km	10 km	1 km	12
Tafutafoe	5 km	2 km	1 km	9
Tafuaufa - Tafuatai	3 km	12 km	4 km	10
Total Savaii	34 km	31 km	7 km	

c. Total Length of Lines	22 kV Lines	HV/LV Lines	LV Lines
	86 km	82 km	62 km
22 kV Lines'	[illegible] km		
LV lines	[illegible] km		

The Project may be undertaken into two phases, the selection of the lines in the each phase will be made referring to the priority mentioned above, the lines have prior numbers will be included in the first phase, the remaining lines will be in the second phase.

2. The following materials, equipment and erection tools for the Project will be provided under the Japanese Grant Aid.

   Distribution line poles, crossarms and fittings
   Conductors, joints, preformed grips and fittings
   Insulators, clamps and fittings
   Distribution transformers and accessories
   Switches lightning arresters and accessories
   Construction equipment (Drilling machine)
   Pickup trucks
   Construction tools
   Miscellaneous materials and equipment

   It is noted that the Watt-Hour Meters and the step up transformer to be installed at Puapua will be studied during the basic design.

3. The Terms of Reference of the Consultant are as mentioned below;

   Home Works

   - Detailed design of the distribution system
   - Preparation of the bid document for procurement of the Plant
   - Administrative works for bidding, evaluation and contract
   - Checking of drawings for approval and comment on it
   - Pre-shipment inspection and issuing inspection certificates

   Field Works

   - Pre-shipment inspection and issuing inspection certificates, when required
   - Preparation of construction drawings such as route maps, pole and insulator configuration
   - Preparation of implementation schedule
   - Supervising construction works
   - Assist to EPC for the commissioning test of the completed lines

- Providing monthly progress reports
- Provision of foremen for additional working gangs, if required

4. The Government of Western Samoa will provide the followings:
   - To assist provision of site accommodation for the consultant at Apia and Lanomanu in Upolu, Salelologa and Vaisala
   - To secure right of way and clearing of the line routes
   - To provide a personnel of Public Relation to solved trouble with local peoples
   - To provide stock yards for the imported materials for the Project and to secure those materials in stores
   - To unload all materials arrived at Western Samoa and clear it from the custom security
   - To transport the materials from the port of Apia to construction sites via depots including transport to Savaii island
   - To construct all distribution lines
   - To provide all erection forces for the construction works
   - To nominate a person in charge to control construction gangs for implementation of the Project
   - To provide all local fund including custom duties and taxes for the imported materials if required and the banking charges for the banking arrangement required under the Japanese Grant Aid
   - Others not covered by Japanese Grant Aid

5 Technical Confirmation

a. 66 kV design of poles

Taking into account of the future reinforcement of the power system in Upolu island, the poles from Tanugamanono to Lotofaga via Siumu are requested to have sufficient height to add a 66 kV line at the top of the poles. Therefore, the lines from Siumu to Lotofaga and Lotofaga to Afulilo power station, which are scheduled to be undertaken by EPC and EEC respectively, are also designed to have such sufficient pole height.

b Design concept

The design of the distribution lines shall basically be made in accordance with [CORD OF PRACTICE FOR OVERHEAD LINE CONSTRUCTION] established by Electricity Supply Association of Australia: No. C(b) 1, 1974 superseding 1962.

The main design criterion are as mentioned below;

Maximum ambient temperature			34 deg. C (M/Record)
Average (Every day) temperature of conductor			
Minimum temperature of conductor:			15deg. C (M/Record)
Maximum Conductor Temperature for Max. sag			
Every day stress:		18 % at 15deg. in still air	(Cord C(b) 1)
Recorded Max.Wind velocity:		82 Knot (41 m/sec)	(M/Record)
Wind loads	On conductors	500 Pa	(Cord C(b) 1)
	On Poles	750 Pa	(Cord C(b) 1)
Safety factor	Conductors	18 % at 15deg. in still air	(Cord C(b) 1)
		50 % at 15deg. C with wind	(Cord C(b).1)
	Poles	Wooden poles:	
		Concrete poles:	
		Steel poles:	
		Steel structures	
Ground clearance	a. Over road:	6.7 m	(Cord C(b).1)
	b. Over other road:	6.7 m	(Cord C(b).1)
	c. Over field not negotiable by vehicles:	5.5m	(Cord C(b) 1)
	Clearance for rural area may be 0.6 m less than above c.		
Spacing	Between phase conductor: (Cord C(b).1)		
	$S = 0.0076$ m/kV + $0.37 \times (S)^{1/2}$ where S=dip in m		
	Between phase and neutral		
	Other structures and building: (Cord C(b).1)		
	Vertical over floor	5.5 m	
	Vertical over roof	4.6 m	
	In any direction from walls	3.0 m	
	In any direction from structure	3.0 m	

Equipment basic insulation level (S[illegible] for [illegible]fulilo Project)

22 kV [illegible]

c. Distribution Line Materials

Conductors	High voltage		AAC	FLY
			AAC	WASP
	Line from Tanugamanono to Siumu		AAC WASP	
	Other lines		AAC FLY	
	Low voltage	Phase conductor	PVC Covered AAC FLY	
		Neutral wire	AAC Bare	FLY
	Applied Standard		BS-215	
Insulators	High voltage 22 kV	Pin type insulator		
		Strain. Ball socket type suspension discs		
	Low voltage	400V Pin		
	Color of Insulators and Bushing			
	Applied Standard			

Poles: Poles will be specified in acordance with AS 2209 and NSW Overhead Line Construction and Maintenance Regulations 1962 as follows:

Length	Stress Group	Treatment	Top Load
9 m (LV)	A (F=100 MPa)	Full length	6 kN
		Preservative Treated	8 kN
12.5 m (22kV)	A (F=100 MPa)	Full length	6 kN
		Preservative	8 kN
		Treated	12 kN
14 m (66/22kV)	A (F=100 MPa)	Full length	8 kN
		Preservative Treated	12 kN

Applied Standard AS-061, 0117-1970, 2209-1979

d. Distribution transformers are installed on the basis of the following conditions

i Each village shown on the attached map is provided at least one distribution transformer

ii Single phase transformers 15 kVA and 25 kVA are basically provided in rural area

iii Three phase transformers will be installed at the village where demand is expected to be more than 50 kVA.

iv The demand in each village is estimated on the basis of population and demand per capita (about 30 to 40 W per Capita) obtained from the past record for keeping the same life level as the habitants in electrified area. The list of transformers estimated in accordance with the above conditions is attached for reference.

e The section switches will basically be provided at the following points

i Branch points of the 22 kV lines

ii Every 2 km but it's interval will be decided taking into account location of villages on line routes.

f. Selection of Poles

The wooden poles will basically be used for the Project, however, concrete poles and steel poles are also studied for the economical comparison. If concrete or steel poles is economical, these will be selected for the supports of the Project.

g. Step up transformer 6.6/22 kV at Savaii Island

The voltage of the existing line from Salelologa power station in Savaii island toward Puapua is 6.6 kV, the voltage of the line from Puapua to North coast to be constructed under the Project will be designed with 22 kV. Therefore, a step up transformer from 6.6 kV to 22 kV will be required to be installed at Puapua.

EPC has a plan to,up grade the existing 6.6 kV line into 22 kV which has been discussed in the Committee of Rural Electrification Programme and mentioned on the Report issued on May, 1988 The step up transformer will be required till the existing 6.6 kV line is up graded, the capacity of the transformer, therefore, is estimated for covering the demand of villages at North coast up to Aopo, but less than the capacity of the existing step up transformer installed at the Salelologa power station.

h. Feeder from Tanugamanono power station

The existing outgoing feeders at the Tanugamanono power station are four (4) 6.6 kV feeders and three (3) 22 kV feeders, one 6.6 kV feeder named Alaoa feeder out of four will be up graded to 22 kV feeder when the line from Tanugamanono to Siumu is completed

EPC intends to provide a new outdoor switchyard out side the power station at his own cost taking into account of the expansion of 22 kV feeders and 66 kV feeders for the 66 kV transmission system in future The out door switchyard shall have to be completed by the commencement of the 22 kV line for Siumu under the Project.

No equipment and materials for the 22 kV feeder for the outdoor switchyard at the power station, therefore, is required to be provided under the Japanese Grant Aid Project.

i. Provisional Pole Arrangement

The provisional pole arrangement for the 22/LV distribution lines to be constructed under the Project are attached herewith for reference.

6. Capability of EPC erection gangs

a. Work progress undertaken by EPC erection gang

The erection gangs (two gangs) of EPC have completed the line from Leulumoega to Siumu about 35 km in length for five months with two gangs, the work progress is, therefore, calculated to be 3.5 km/month/gang.

The stringing work for low voltage single phase line is being carried out at the South coast, the progress is calculated to be 3.5 km/day (stringing work is being carried out in night time, since no traffic on the road).

b. EPC organization for the Project

All construction works of the distribution lines under Japanese Grant Aid will be undertaken by EPC's own construction gangs. A person in charge to control the construction gangs is required to be nominated by EPC for the proper implementation of the Project.

7. Tentative Implementation Schedule

Referring to the Item 17 Reference in page 14 in [Japan's Grant Aid Program] the Tentative Implementation Schedule for the Project is estimated to be as shown on the attached Schedule provided that all construction gangs under EPC are placed for the Project.

TENTATIVE IMPLEMENTATION SCHEDULE ON RURAL ELECTRIFICATION IN PROJECT IN WESTERN SAMOA

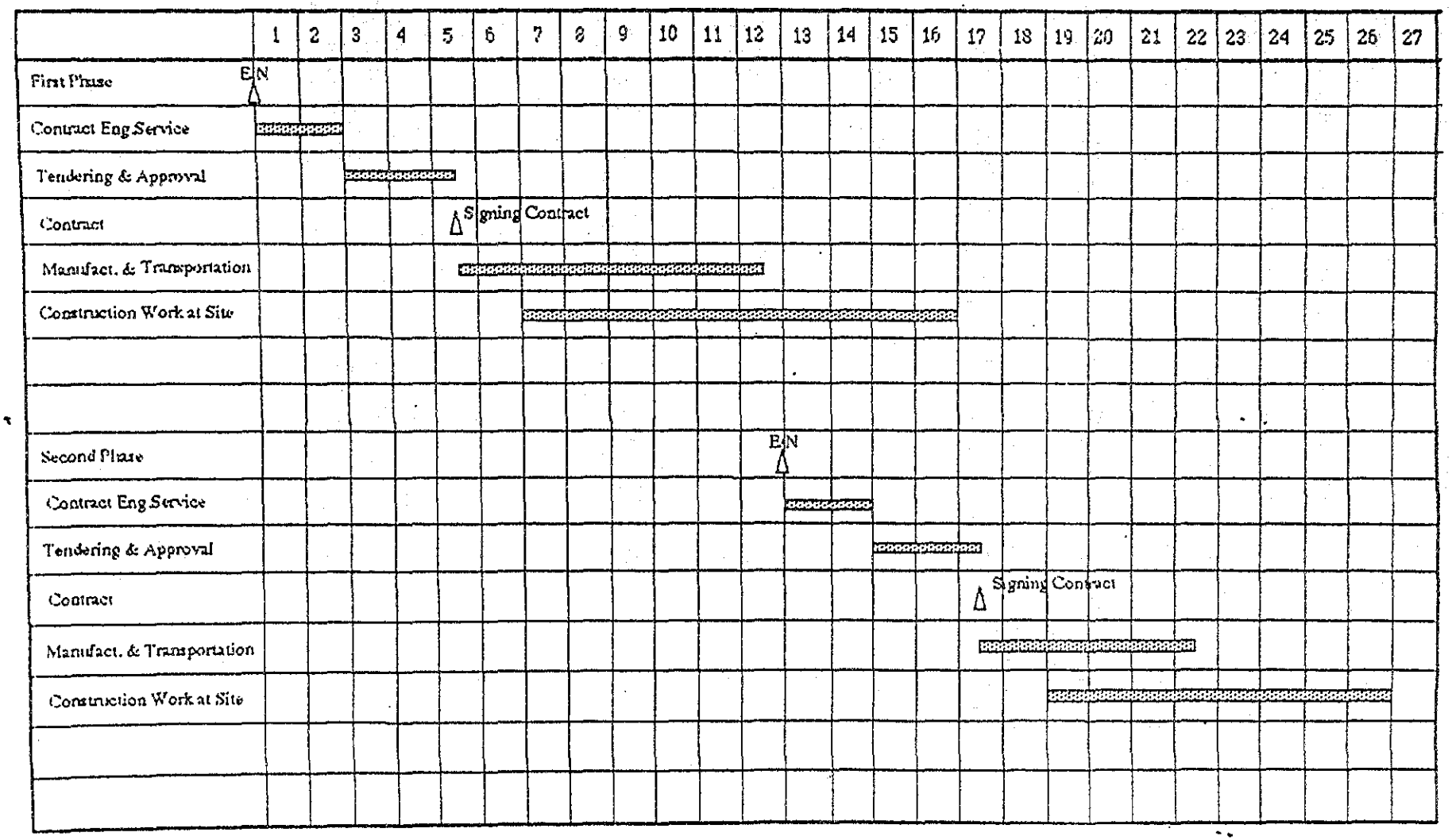

Population and Transformer Capacity for Villages to be Electrified

Districts	Villages	Population in 1986	Population in 1990	Demand (kW) 30W/Cap	40W/Cap	50W/Cap	Tr Capa (kVA)	15 kVA	25 kVA	50 kVA	100 kVA
UPOLUISLAND											
VAIMAUGA WEST	**Moataa**	1,363	1,447	43	58	72		0	0	0	0
	Vaivase-Tai	1,344	1,426	43	57	71		0	0	0	0
	Vaivase-Uta	542	575	17	23	29		0	0	0	0
	Magiagi-Tai	1,419	1,506	45	60	75		0	0	0	0
	Magiagi-Uta	56	59	2	2	3		0	0	0	0
	Toomatagi	286	304	9	12	15		0	0	0	0
	Tanoalei'a	719	763	23	31	38		0	0	0	0
	Faatoialemanu	965	1,024	31	41	51		0	0	0	0
	Vaiala-Tai	481	511	15	20	26		0	0	0	0
	Vaiala-Uta	236	250	8	10	13		0	0	0	0
	Vinifou	131	139	4	6	7		0	0	0	0
	Vaipuna	391	415	12	17	21		0	0	0	0
	Levili	203	215	6	9	11		0	0	0	0
	Matautu-Uta	511	542	16	22	27		0	0	0	0
	Matautu-Tai	872	926	28	37	46		0	0	0	0
	Leone	581	617	18	25	31		0	0	0	0
	Vaisigano	432	459	14	18	23		0	0	0	0
	Niue	233	247	7	10	12		0	0	0	0
	Maluafou	120	127	4	5	6		0	0	0	0
	Malifa	258	274	8	11	14		0	0	0	0
	Lelata	196	208	6	8	10		0	0	0	0
	Leifiifi	239	254	8	10	13		0	0	0	0
	Motootua	1,131	1,200	36	48	60		0	0	0	0
	Leufisas	255	271	8	11	14		0	0	0	0
	Tanugamanono	654	694	21	28	35		0	0	0	0
	Papauta	504	535	16	21	27		0	0	0	0
	Vailima	790	838	25	34	42		0	0	0	0
	Avele	371	394	12	16	20		0	0	0	0

Districts	Villages	Population in 1986	Population in 1990	Demand (kW) 30W/Cap	40W/Cap	50W/Cap	Tr. Capa (kVA)	15 kVA	25 kVA	50 kVA	100 kVA
	Letava	264	280	8	11	14	15	1	0	0	0
	Vaoala	503	534	16	21	27	50	0	0	1	0
	Tiapapata	112	119	4	5	6	15	1	0	0	0
	Afiamalu East	74	79	2	3	4	15	1	0	0	0
	Afiamalu West	40	42	1	2	2	15	1	0	0	0
	Apia	358	380	11	15	19		0	0	0	0
	Tauese	236	250	8	10	13		0	0	0	0
	Tufuiopa	370	393	12	16	20		0	0	0	0
	Lalovaea	815	865	26	35	43		0	0	0	0
	Palisi	671	712	21	28	36	50	0	0	1	0
	Matafele	53	56	2	2	3	15	1	0	0	0
	Mulivai	66	70	2	3	4	15	1	0	0	0
	Tuloto	541	574	17	23	29		0	0	0	0
	Togafuafua	389	413	12	17	21		0	0	0	0
	Taufusi	716	760	23	30	38		0	0	0	0
	Alamagoto	611	648	19	26	32		0	0	0	0
	Vaimea	426	452	14	18	23		0	0	0	0
	Fugalei	868	921	28	37	46		0	0	0	0
	Saleufi	516	548	16	22	27		0	0	0	0
	Savalalo	396	420	13	17	21	25	0	1	0	0
	Gogi	314	333	10	13	17	25	0	1	0	0
	Mulinuu	194	206	6	8	10	15	1	0	0	0
	Aai-o-Fiti	282	299	9	12	15	15	1	0	0	0
	Sub-Total	24,098	25,577					8	2	2	0

Districts	Villages	Population in 1986	Population in 1990	Demand (kW) 30W/Cap	40W/Cap	50W/Cap	Tr. Capa (kVA)	15 kVA	25 kVA	50 kVA	100 kVA
SIUMU	Maninoa	320	340	10	14	17	25	0	1	0	0
	Siumu	561	595	18	24	30	50	0	0	1	0
	Siumu-Uta	590	626	19	25	31	50	0	0	1	0
	Saaga	407	432	13	17	22	25	0	1	0	0
	Sub-Total	1,878	1,993					0	2		
FALEALILI	Togitogiga	45	48	1	2	2	15	1	0	0	0
	Iliili	77	82	2	3	4	15	1	0	0	0
	Saleilua	549	583	17	23	29	50	0	0	1	0
	Poutasi	462	490	15	20	25	25	0	1	0	0
	Vaovai	638	677	20	27	34	50	0	0	1	0
	Hatautu	296	314	9	13	16	25	0	1	0	0
	Tafatafa	275	292	9	12	15	15	1	0	0	0
	Malaemalu	239	254	8	10	13	15	1	0	0	0
	Satalo	302	321	10	13	16	25	0	1	0	0
	Piu	74	79	2	3	4	15	1	0	0	0
	Sapunaoa	387	411	12	16	21	25	0	1	0	0
	Salwsatele	368	391	12	16	20	25	0	1	0	0
	Siuniu	116	123	4	5	6	15	1	0	0	0
	Salani	631	670	20	27	33	50	0	0	1	0
	Utulaelae	171	181	5	7	9	15	1	0	0	0
	Sapee	131	139	4	6	7	15	1	0	0	0
	Sub-Total	4,761	5,053					8	5	3	0
LOTOFAGA	Matatufu	475	504	15	20	25	25	0	1	0	0
	Lotofaga	916	972	29	39	49	50	0	0	1	0
	Vavau	387	411	12	16	21	25	0	1	0	0
	Sub-Total	1,778	1,887					0	2	1	0

Districts	Villages	Population in 1986	Population in 1990	Demand (kW) 30W/Cap	40W/Cap	50W/Cap	Tr. Capa (kVA)	25 kVA	35 kVA	50 kVA	100 kVA
LEPA	Aufaga	511	542	16	22	27	50	0	0	1	0
	Vaigalu	124	132	4	5	7	15	1	0	0	0
	Lepa	318	338	10	14	17	25	0	1	0	0
	Siupapa	198	210	6	8	11	15	1	0	0	0
	Saleapaga	304	323	10	13	16	25	0	1	0	0
	Sub-Total	1,455	1,544					2	2	1	0
ALEIPATA	Satitea	481	511	15	20	26	50	0	0	1	0
	Malaela	123	131	4	5	7	15	1	0	0	0
	Lepue	258	274	8	11	14	15	1	0	0	0
	Mutiatele	252	267	8	11	13	15	1	0	0	0
	Saleaaumua	572	607	18	24	30	50	0	0	1	0
	Utufaalalafa	90	96	3	4	5	15	1	0	0	0
	Samusu	517	549	16	22	27	50	0	0	1	0
	Amaile	260	276	8	11	14	15	1	0	0	0
	Tiavea	584	620	19	25	31	50	0	0	1	0
	Lalomanu	748	794	24	32	40	50	0	0	1	0
	Vailoa	376	399	12	16	20	25	0	1	0	0
	Ulutogia	201	213	6	9	11	15	1	0	0	0
	Sub-Total	4,462						6	1	5	0
ANOAMAA EAST	**Saletele**	198	210	6	8	11		0	0	0	0
	Sauano	221	235	7	9	12	15	1	0	0	0
	Falevao	423	449	13	18	22	25	0	1	0	0
	Lalemauga	327	347	10	14	17		0	0	0	0
	Manunu	177	188	6	8	9	15	1	0	0	0
	Sauniatu	133	141	4	6	7	15	1	0	0	0
	Lufilufi	896	951	29	38	48		0	0	0	0
	Falefa	1,356	1,439	43	58	72		0	0	0	0
	Sub-Total	3,731	3,960					3	1	0	0

Districts	Villages	Population in 1986	Population in 1990	Demand (kW) 30W/Cap	40W/Cap	50W/Cap	Tr. Capa (kVA)	15 kVA	25 kVA	50 kVA	100 kVA
FALEATA EAST	**Sinamoga**	1,119	1,188	36	48	59		0	0	0	0
	Moamoa	1,007	1,069	32	43	53		0	0	0	0
	Vaimoso	1,290	1,369	41	55	68		0	0	0	0
	Pesaga	254	270	8	11	13		0	0	0	0
	Lotopa	1,802	1,913	57	77	96		0	0	0	0
	Alafua	884	938	28	38	47		0	0	0	0
	Tuaefu	54	57	2	2	3	15	1	0	0	0
	Tuanaimato East	325	345	10	14	17	25	0	1	0	0
	Seesee	234	248	7	10	12	25	0	1	0	0
	Lepea	670	711	21	28	36	50	0	0	1	0
	Vaitoloa	459	487	15	19	24		0	0	0	0
	Sub-Total	8,098	8,595					1	2	1	0
FALEATA WEST	Tulaele	292	310	9	12	15	15	1	0	0	0
	Talimatau	781	829	25	33	41		0	0	0	0
	Vailoa	1,153	1,224	37	49	61		0	0	0	0
	Vaiusu	1,371	1,455	44	58	73		0	0	0	0
	Vigaga	724	768	23	31	38		0	0	0	0
	Elisefou	217	230	7	9	12		0	0	0	0
	Vaitele	391	415	12	17	21		0	0	0	0
	Saina	198	210	6	8	11		0	0	0	0
	Toamua	582	618	19	25	31		0	0	0	0
	Safune	221	235	7	9	12		0	0	0	0
	Puipaa	623	661	20	26	33		0	0	0	0
	Falelauniu	53	56	2	2	3	15	1	0	0	0
	Leaupuni	169	179	5	7	9	15	1	0	0	0
	Tapatapae	117	124	4	5	6	15	1	0	0	0
	Tanumapua	374	397	12	16	20	25	0	1	0	0
	Tafaigata	278	295	9	12	15	15	1	0	0	0
	Siusega	729	774	23	31	39		0	0	0	0
	Tuanaimato West	248	263	8	11	13	15	1	0	0	0
	Sub-Total	8,521	9,044					6	1	0	0

Districts	Villages	Population in 1986	Population in 1990	Demand (kW) 30W/Cap	40W/Cap	50W/Cap	Tr. Capa (kVA)	15 kVA	25 kVA	50 kVA	100 kVA
SAGAGA USOGA	**Malie**	1,572	1,668	50	67	83		0	0	0	0
	Afega	1,708	1,813	54	73	91		0	0	0	0
	Tuanai	1,102	1,170	35	47	58		0	0	0	0
	Sub-Total	4,382	4,651					0	0	0	0
GAGAEMAUGA I	**Leauvaa**	2,244	2,382	71	95	119		0	0	0	0
SAGAGA FALEFA	**Faleula**	1,631	1,731	52	69	87		0	0	0	0
	Alamutu	224	238	7	10	12		0	0	0	0
	Levi	885	939	28	38	47		0	0	0	0
	Lotosoa	572	607	18	24	30		0	0	0	0
	Salepeua'e	624	662	20	26	33		0	0	0	0
	Nonoa	434	461	14	18	23		0	0	0	0
	Malua	297	315	9	13	16		0	0	0	0
	Utualii	478	507	15	20	25		0	0	0	0
	Tufulele	703	746	22	30	37		0	0	0	0
	Aleisa East	344	365	11	15	18	25	0	1	0	0
	Aleisa West	610	647	19	26	32	50	0	0	1	0
	Aele	326	346	10	14	17	25	0	1	0	0
	Nuu	257	273	8	11	14	15	1	0	0	0
	Sub-Total	7,385	7,838					1	2	1	0
ALOFI I	**Falcasiu**	2,894	3,072	92	123	154		0	0	0	0
	Fasitoo-Uta	1,837	1,950	58	78	97		0	0	0	0
	Lepale	43	46	1	2	2	15	1	0	0	0
	Sub-Total	4,774	5,067					1	0	0	0
ALOFI II	Nofoalii	1,716	1,821	55	73	91	50	0	0	2	0
	Leulumoega	1,200	1,274	38	51	64	50	0	0	2	0
	Sub-Total	3,095	93					0	0	4	0

Districts	Villages	Population in 1986	Population in 1990	Demand (kW) 30W/Cap	40W/Cap	50W/Cap	Tr. Capa (kVA)	15 kVA	25 kVA	50 kVA	100 kVA
ALOFI III	**Fasitootai**	1,254	1,331	40	53	67		0	0	0	0
	Vailuutai	738	783	23	31	39		0	0	0	0
	Falcatiu	474	503	15	20	25		0	0	0	0
	Faleele	26	28	1	1	1	15	1	0	0	0
	Satapuala	1,296	1,376	41	55	69		0	0	0	0
	Afia	163	173	5	7	9	15	1	0	0	0
	Vaipapa	126	134	4	5	7	15	1	0	0	0
	Satuimaluifilu	543	576	17	23	29		0	0	0	0
	Afolau	65	69	2	3	3	15	1	0	0	0
	Sina	150	159	5	6	8	15	1	0	0	0
	Sub-Total	4,835	5,132					5	0	0	0

Districts	Villages	Population in 1986	Population in 1990	Demand (kW) 30W/Cap	40W/Cap	50W/Cap	Tr. Capa (kVA)	15 kVA	25 kVA	50 kVA	100 kVA
TOTAL TRANSFORMERS IN UPOLU ISLAND								41	20	18	0

Population and Transformer Capacity for Villages to be Electrified in Savaii Island

Districts	Villages	Population in 1986	Population in 1990	Demand (kW) 30W/Cap	40W/Cap	50W/Cap	Tr. Capa (kVA)	15 kVA	25 kVA	50 kVA	100 kVA
SAVAII ISLAND											
FAASDALELEAGA IV	**Lane**	695	738	22	30	37		0	0	0	0
	Asaga	243	258	8	10	13		0	0	0	0
	Puapua	519	551	17	22	28		0	0	0	0
	Sub-Total	1,457	1,546					0	0	0	0
GAGAEMAUGA I	Patamea	605	642	19	26	32	50	0	0	1	0
	Samalaeulu	828	879	26	35	44	50	0	0	1	0
	Mauga	157	167	5	7	8	15	1	0	0	0
	Sub-Total	1,590	1,688					1	0	2	
GAGAIFOMAUGA III	Fagaee	248	263	8	11	13	15	1	0	0	0
	Sasina	614	652	20	26	33	50	0	0	1	0
	Letui	273	290	9	12	14	15	1	0	0	0
	Aopo	389	413	12	17	21	25	0	1	0	0
	Sub-Total	1,524	1,618					2	1	1	0
VAISIGANO EAST	**Utulea**	41	44	1	2	2		0	0	0	0
	Matavai	1,571	1,667	50	67	83		0	0	0	0
	Auala	679	721	22	29	36		0	0	0	0
	Vaisala	652	692	21	28	35		0	0	0	0
	Sub-Total	2,943	3,124					0	0	0	0
FALEALUPO	Falealupo-Uta	718	762	23	30	38	50	0	0	1	0
	Vaetupua	386	410	12	16	20	25	0	1	0	0
	Avata	170	180	5	7	9	15	1	0	0	0
	Sub-Total	1,274	1,352					1	1	1	0

Districts	Villages	Population in 1986	Population in 1990	Demand (kW) 30W/Cap	40W/Cap	50W/Cap	Tr. Capa (kVA)	15 kVA	25 kVA	50 kVA	100 kVA
ALATAUA WEST	Tufutafoe	354	376	11	15	19	25	0	1	0	0
	Neiafu-Tai	506	537	16	21	27	50	0	0	1	0
	Neiafu-Uta	603	640	19	26	32	50	0	0	1	0
	Falelima	555	589	18	24	29	50	0	0	1	0
	Sub-Total	2,018						0	1	3	0
PALAULI FALEFA	**Gataivai**	1,006	1,068	32	43	53		0	0	0	0
	Gautavai	285	302	9	12	15		0	0	0	0
	Vaiala	291	309	9	12	15		0	0	0	
	Sili	870	923	28	37	46		0	0	0	0
	Puleia	281	298	9	12	15		0	0	0	0
	Papa	235	249	7	10	12		0	0	0	0
	Tafua-Tai	357	379	11	15	19	25	0	1	0	0
	Tafua-Uta	185	196	6	8	10		0	0	0	0
	Sub-Total	3,510	3,725					0	1	0	0

Districts	Villages	Population in 1986	Population in 1990	Demand (kW) 30W/Cap	40W/Cap	50W/Cap	Tr. Capa (kVA)	15 kVA	25 kVA	50 kVA	100 kVA
TOTAL TRANSFORMERS IN ~~UPOLU~~ SAVAII ISLAND								4	4	5	0
TOTAL TRANSFORMERS IN UPOLU ISLAND								41	20	18	0
GROUND TOTAL								45	24	23	0

2,425 kVA

i. STRAIGHT LINE POLES

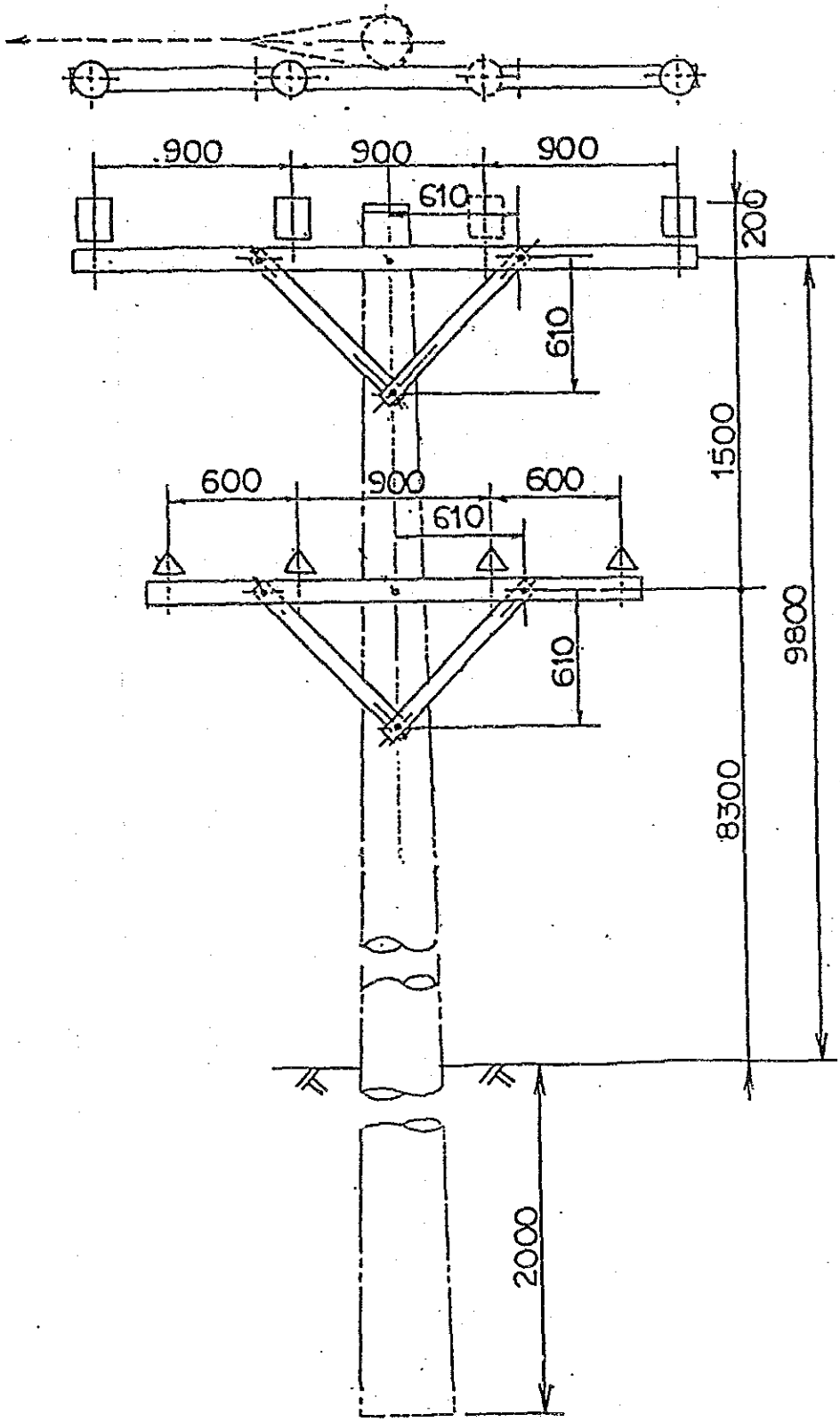

2. LIGHT ANGLE POLE (DOUBLE PIN)

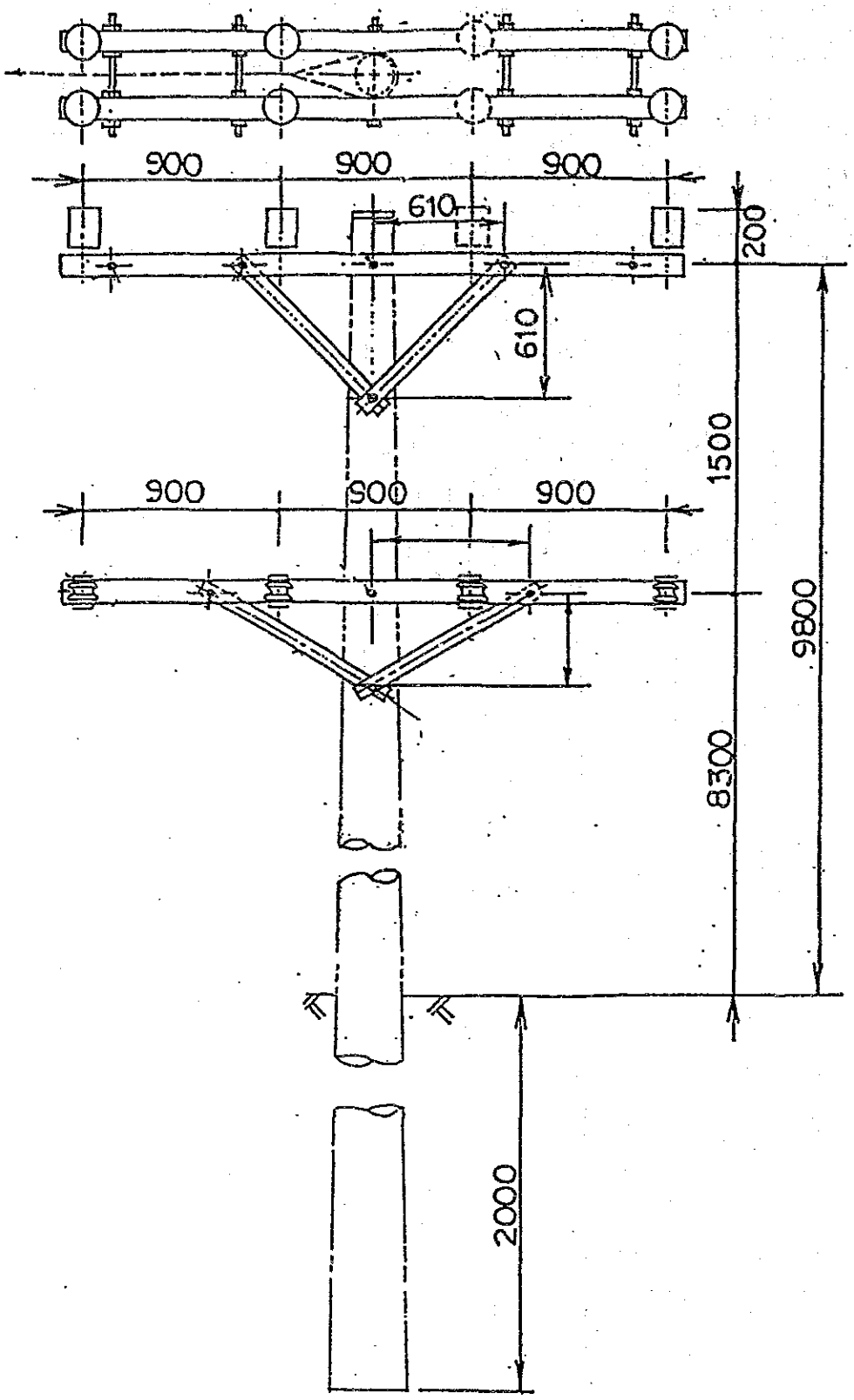

3. ANGLE LINE POLE (SINGLE ARM)

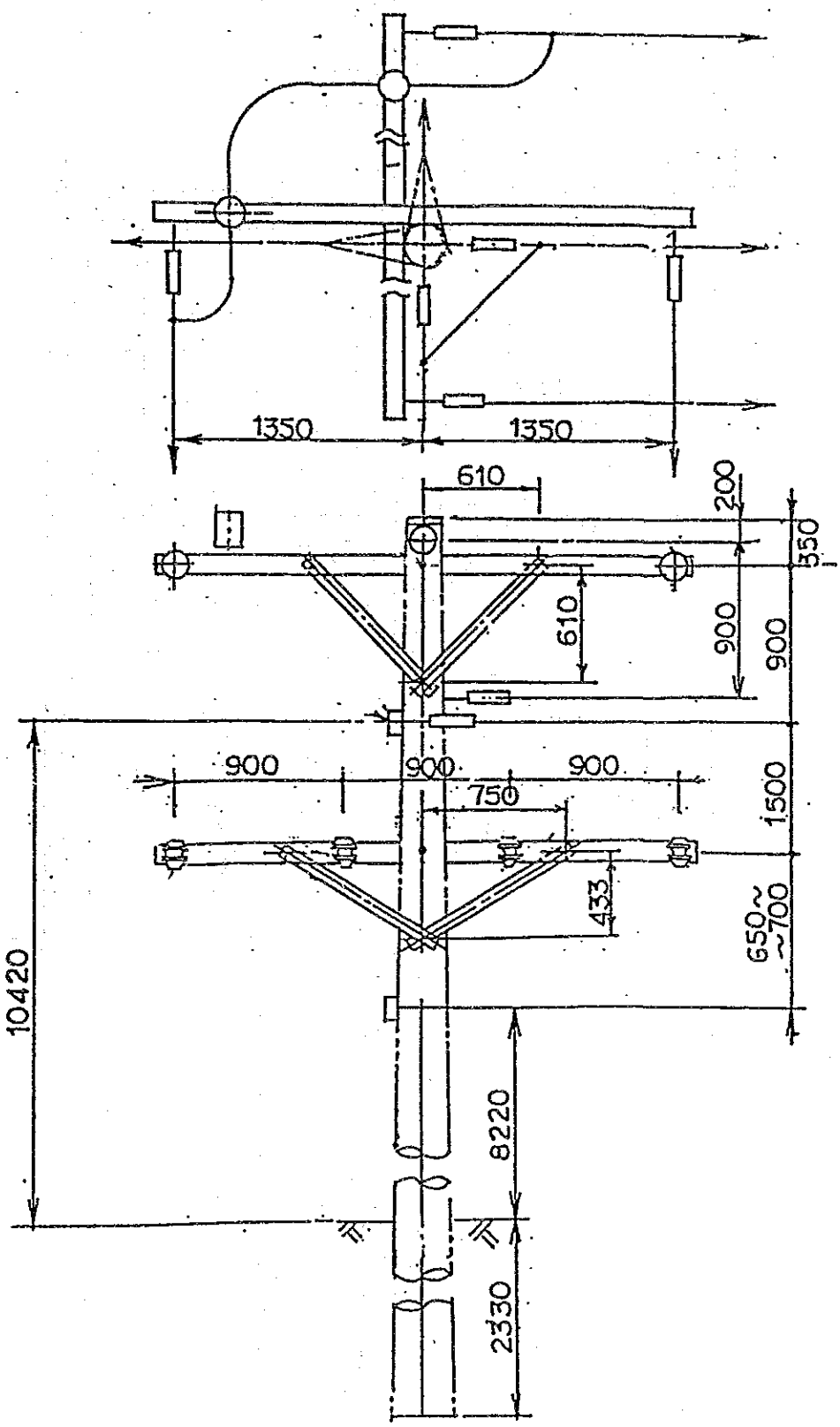

4. ANGLE LINE POLE (DOUBLE ARM

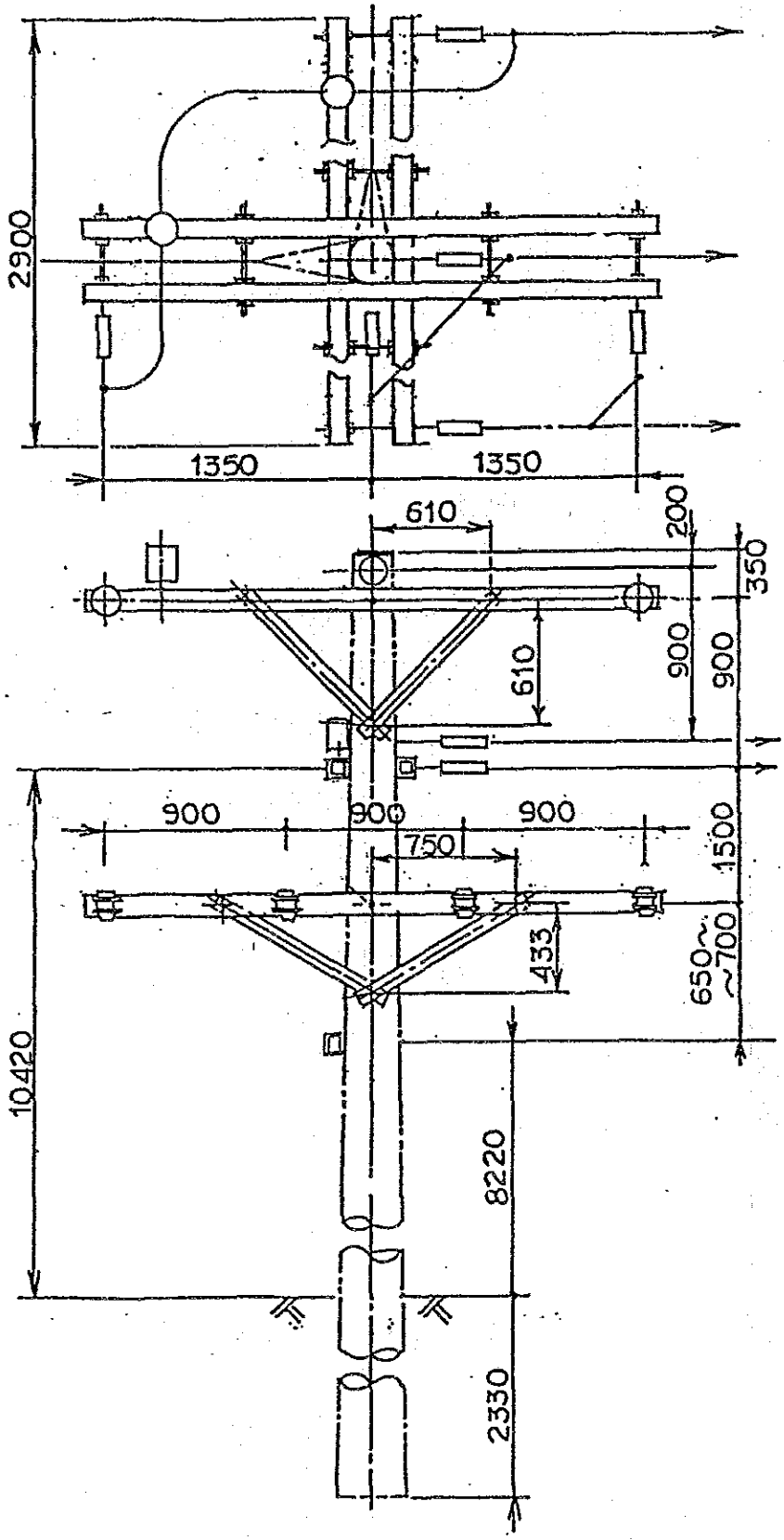

5. ANGLE LINE POLES STRAIN (SINGLE ARM)

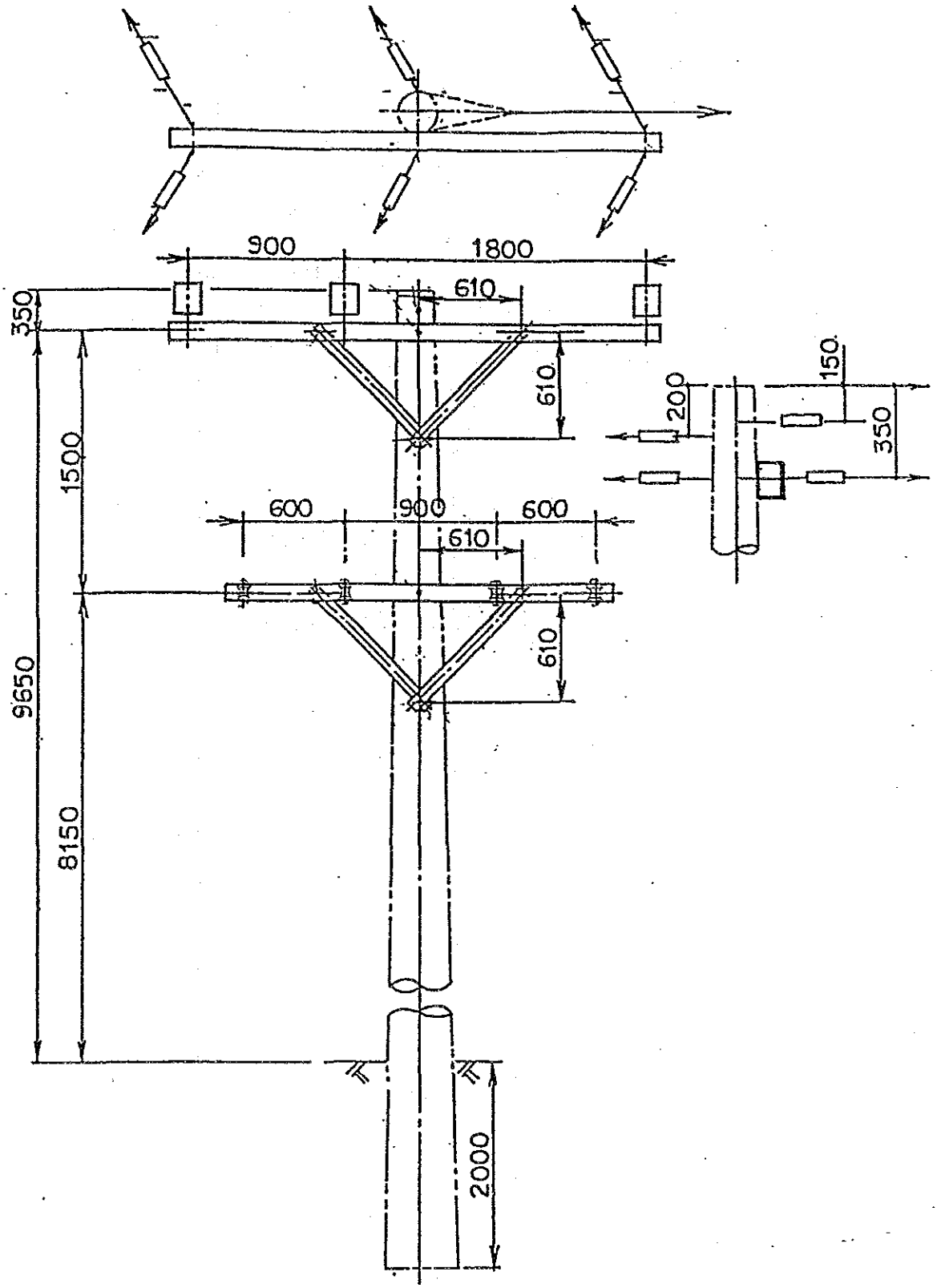

6. TERMINAL POLE (SINGLE ARM)

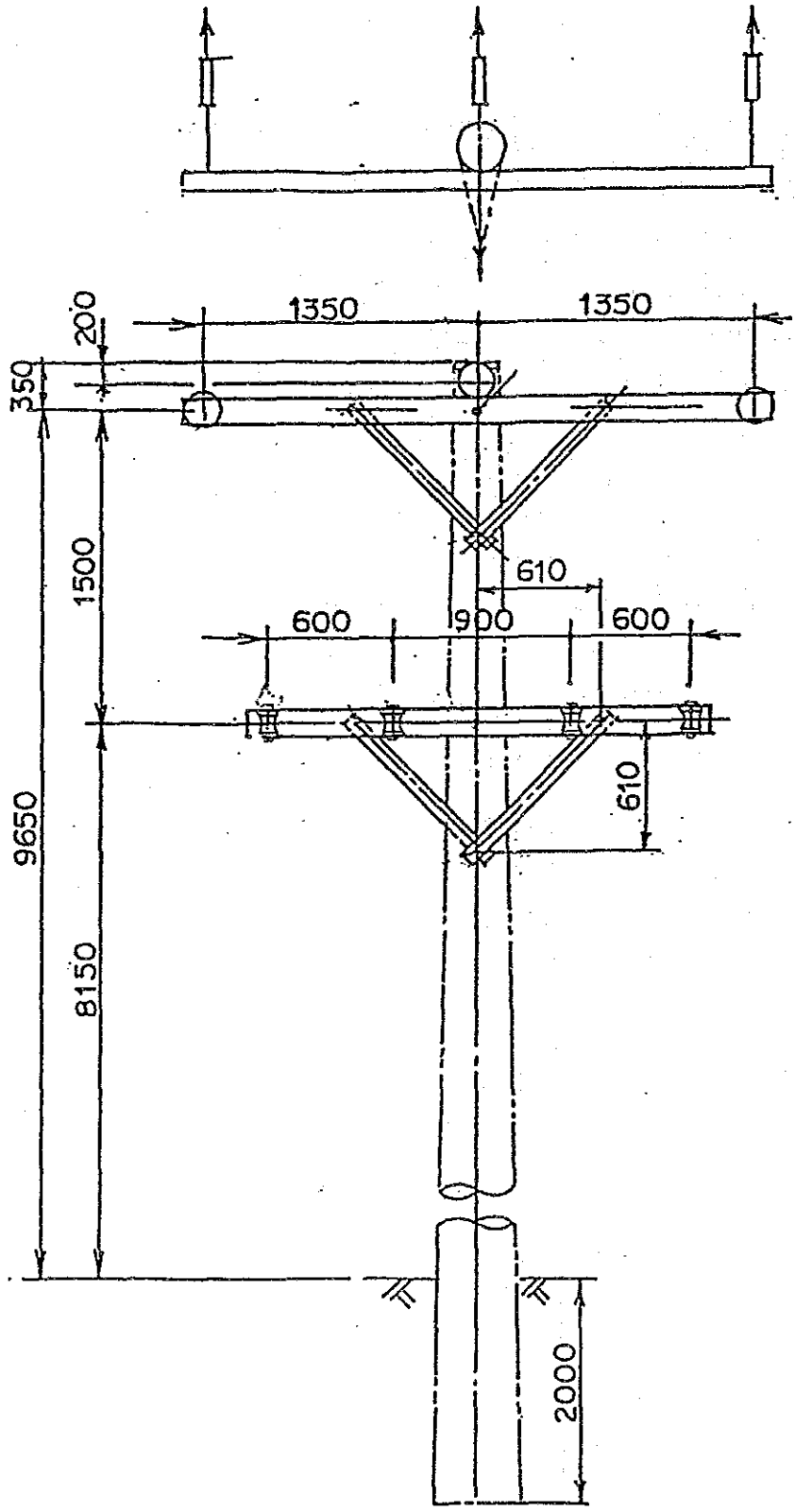

7. TERMINAL POLE (DOUBLE ARM)

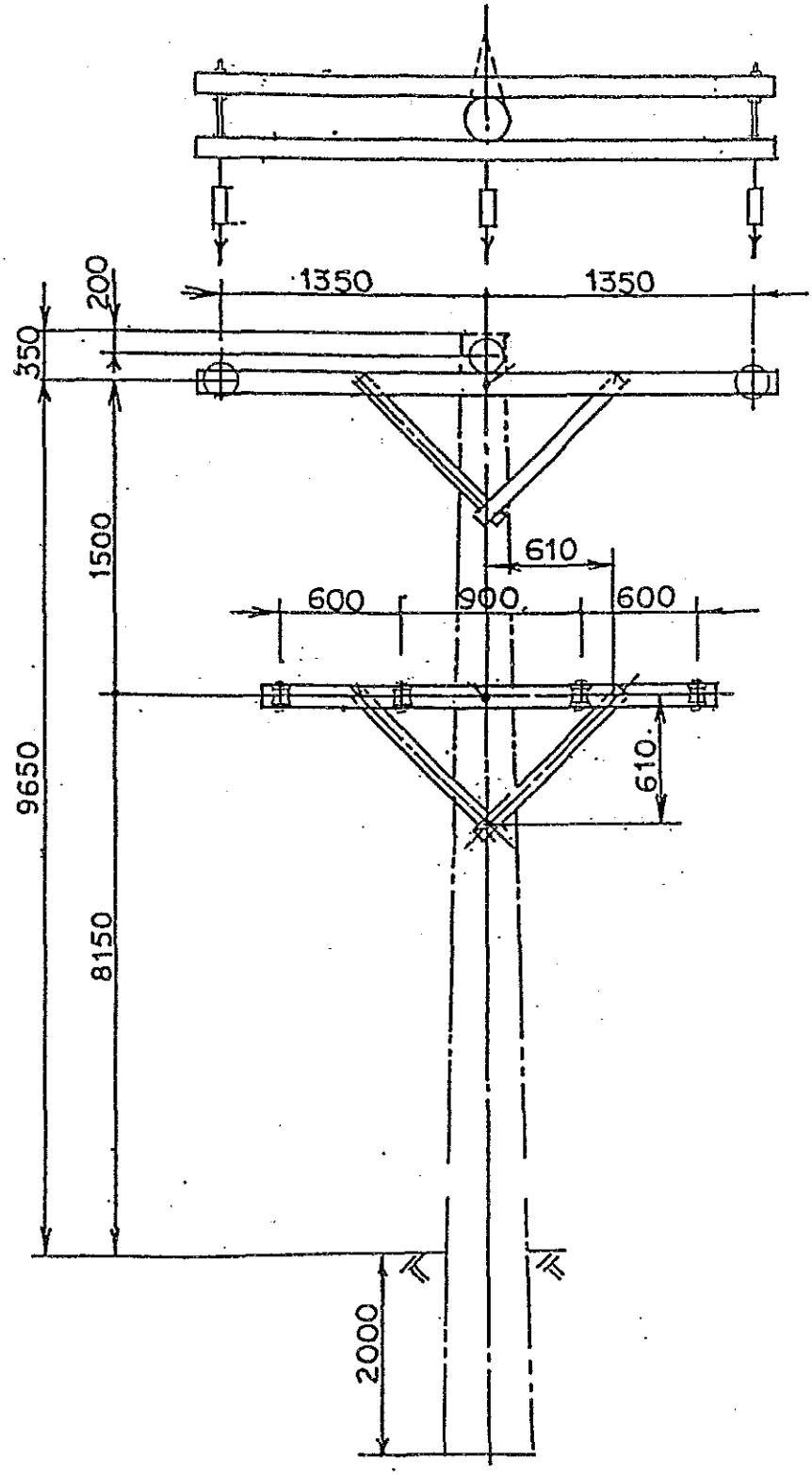

8. TRANSFORMER POLE

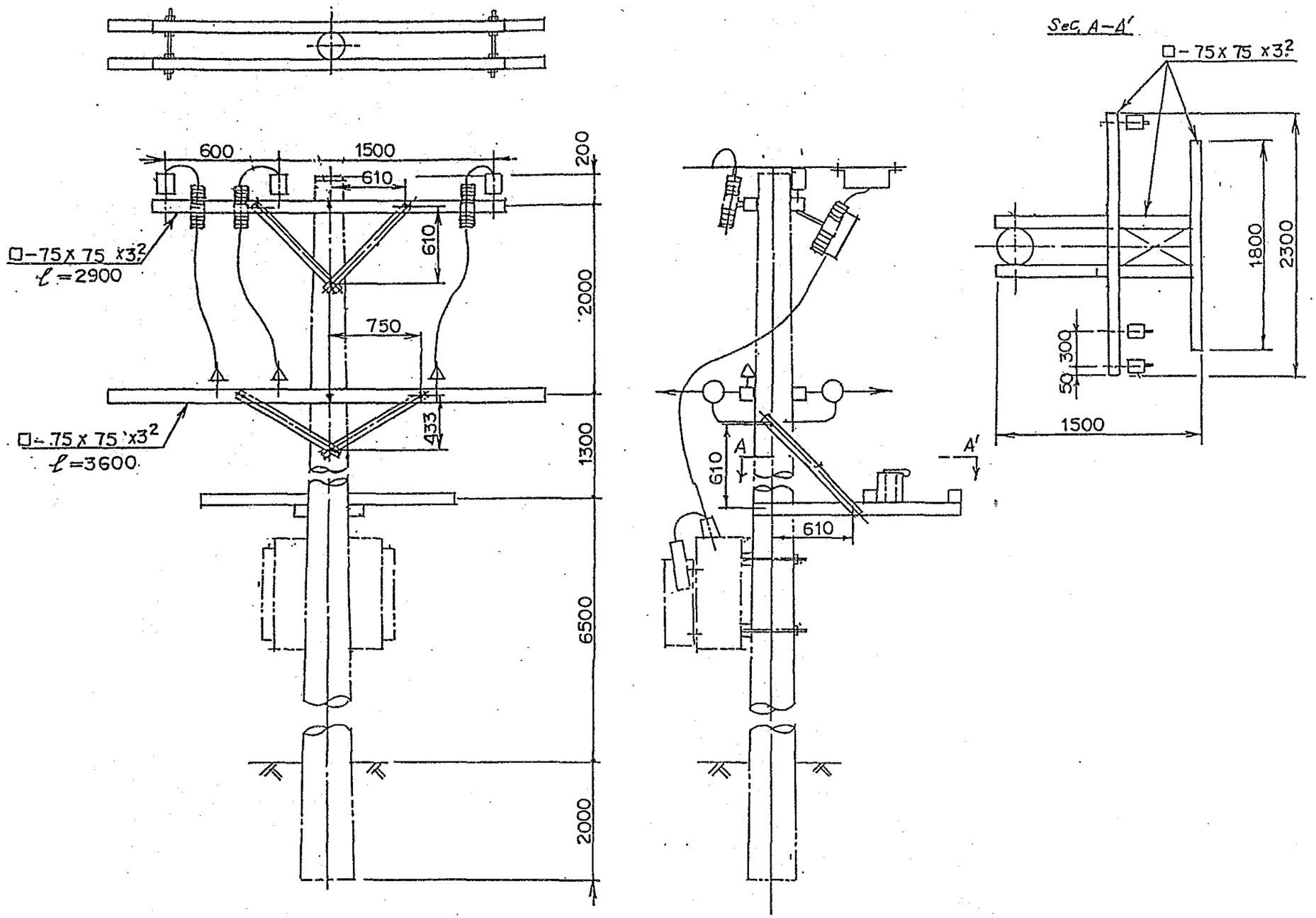

9. STAY ASSEMBLY

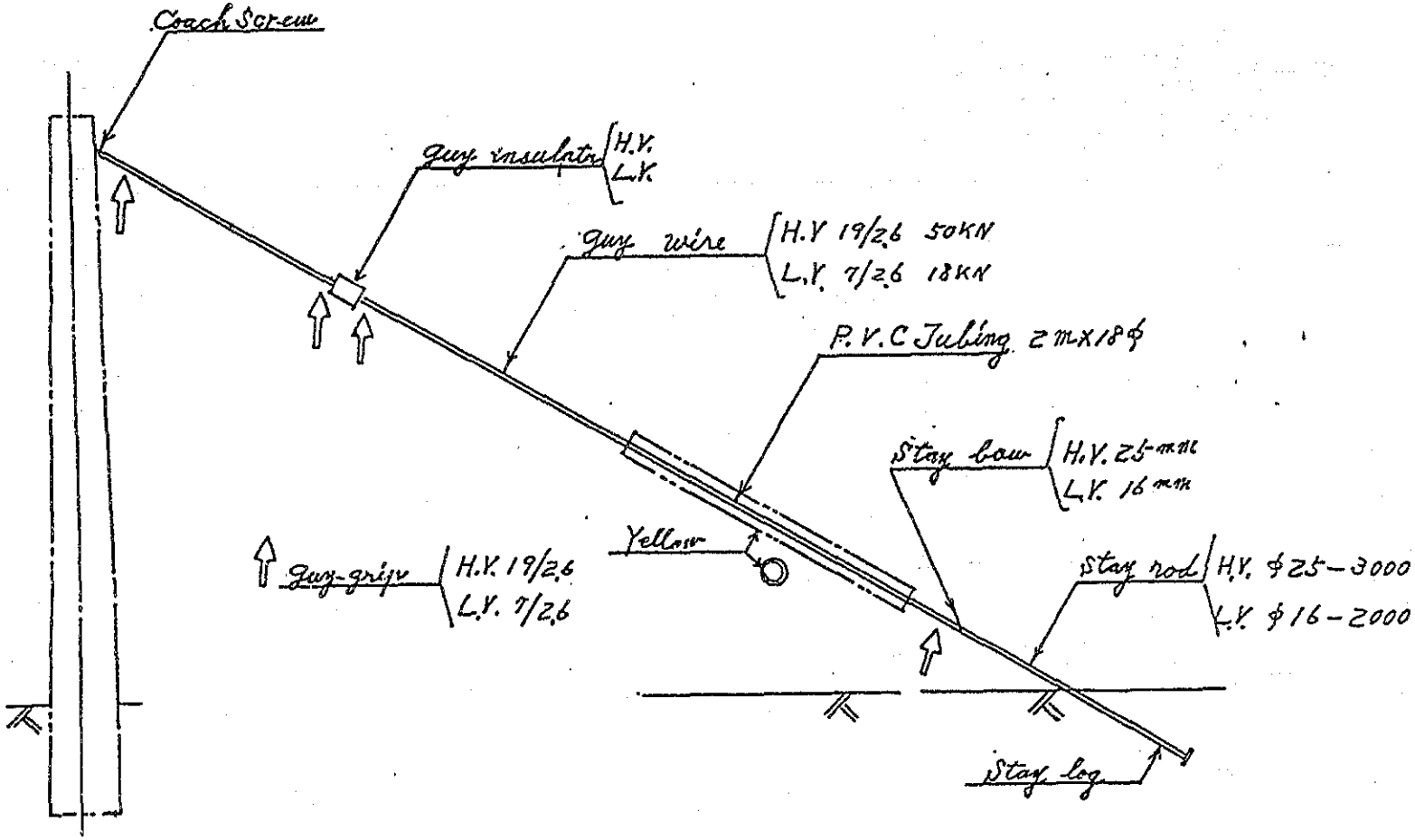

10. FLYING STAY ASSEMBLY

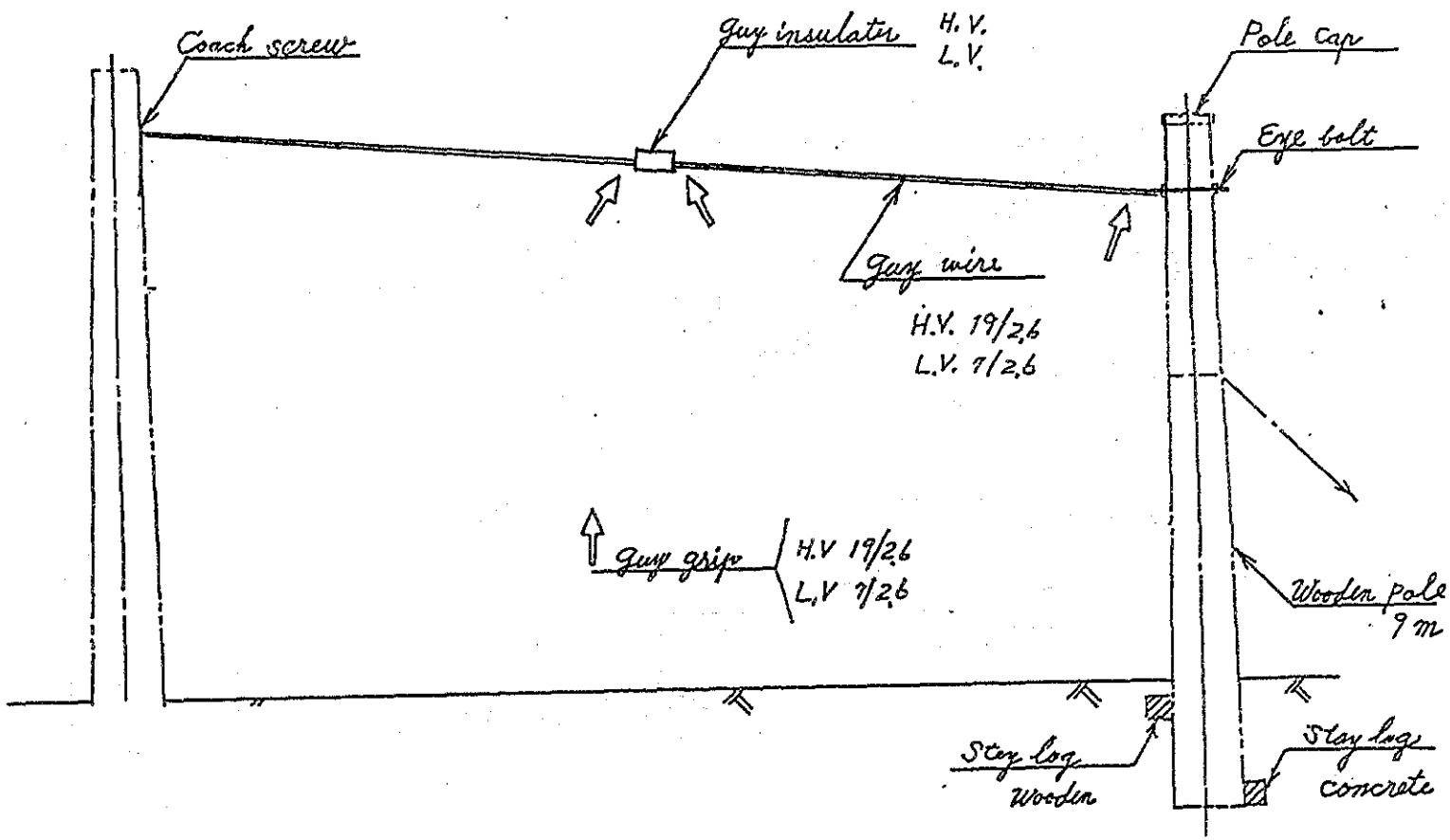

ELECTRIC POWER CORPORATION

COMMENTS ON "FIELD SURVEY REPORT ON
RURAL ELECTRIFICATION PROJECT IN WESTERN SAMOA"

1. Item 1(b) - Page 1:

It was anticipated that the reticulation of the Island of Savaii would be carried simultaneously with that of Upolu Island. The priorities allocated indicate that Savaii will be last to be reticulated.

It was expected there would be separate priorities - 1 to 4 allocated to Savaii replacing priorities 9 to 11 in the report.

2. Item 2 - Page 2:

Under the item "Construction Equipment (Drilling Machine)", it makes no mention of a crane truck for erection of poles. Is it intended that a crane will be sent out to perform the erection? It will be needed.

3. Item 2 - Page 2:

No mention is made of stay wire, stay wire bows, and anchoring equipment.

4. Item 4 - Page 3:

"To construct all distribution lines" should read: To "erect" all distribution lines.

5. Item 4 - Page 3:

To provide all erection forces for the construction works is too sweeping in the light of "Field Works" in Item 3. Suggest rewording to:

> "To provide the erection gang of labourers and linemen (with the exception of additional foremen under Item 3 above).

6. Item 5(b) - Page 4:

Average everyday temperature of conductor. Allow 30°C.

7. Item 5(b) - Page 4:

Maximum Temperature of Conductor (for maximum sag). Allow for 50°C.

.../2

8. Safety Factors: Item 5b - Page 4:

Wooden Poles:	4 (or preferably purchase poles with a strength rating (eg, 4, 6 or 8 kN) set by the Standard Specification AS 2209)
Concrete Poles) Steel Poles)	2 based on actual test results to establish crippling load
Steel Structures:	2 (if based on actual crippling load tests)
	4 (if based on design calculations only) and the design includes long members with compressive loads. These safety factors based on yield point

9. Item 5(b) - Page 4:

Ground Clearances - Please use the following clearances:

(a) 66 kV and 22 kV (EHV) 6.7m at any place

(b) 400/230 Volts Distribution lines 5.5m across or along roads, and any other place used by vehicles

(c) 400/230V Service Lines (last span to house):

- 5.5m across any part of a road
- 3.5m across any private property where vehicles will be used
- 2.7m at point of connection

10. Item 5(b) - Page 4:

The formula for spacing is confusing:

$S = 0.0076m/kV + 0.37(S)^{\frac{1}{2}}$ where
S = dip in m

Suggest the formula be rewritten.

Spacing $S = 0.0076m/kV + 0.37(d)^{\frac{1}{2}}$ where
S = Spacing in metres
d = dip or sag in metres

11. Item 5(c) - Page 5:

Colour preferred for insulators and bushings is Munsell grey, sometimes also known as "Sky glaze".

12. Item 5(d) - Page 6:

Suggest reword:

"Three phase transformers will be installed at villages where demand exceeds the largest size single phase transformer (25 kVA).

13. Item 5(h) - Page 7:

It is not necessary to have the 22kV outdoor switch yard completed before the commencement of the 22kV line from Tanugamanono to Siumu. It will be possible to connect the Siumu line to one of the 22kV lines at the gate of Tanugamanono - (preferably the West Coast Feeder) by a short 22kV cable link.

Otherwise it is accepted that the Japanese Aid does not include the outdoor switching yard.

14. Item 6(b) - Page 7:

It is suggested this be reworded more in line with the spirit of Items 3 and 4 as follows:

EPC Organization for the Project:

EPC will arrange a competent engineer to implement the project and a public relations officer to negotiate land use for the proper implementation of the project before commencement of construction in Samoa.

EPC will, provide the erection work force so that the work can be implemented promptly, in accordance with the following tentative implementation schedule and in accordance with clauses 3 and 4 of this report".

It is considered that the original wording is too broad, and is, as a result, in conflict with the wording of the other clauses relating to staffing the project.

In all other respects the report is considered adequate.

Regarding the skeleton diagram for Poles etc.

Please refer 66kV line - Pages 1 and 2:

It is considered 2.000m bolt hole spacing for the 66kV arm to 22kV arm is excessive.

In view of a gain in height of about 400mm due to the difference in height of the 66kV post (about 600mm height) to that of a 22kV pin insulator (about 250mm) there is no reason why the spacing should not be 1.5m.

This will also make the 66kV wires within reach for a man standing on the 22kV arm.

The distances between arms above the LV arm is so great as to need "step bolts" for a worker to climb within reach of the wires - suggest these be shown at about 300 to 350mm spacing.

Eric J Hussey
GENERAL MANAGER

8 November 1989

8 November 1989

COMMENTS ON FIELD SURVEY REPORT ON RURAL ELECTRIFICATION PROJECT IN WESTERN SAMOA

1. SCOPE OF PROJECT

(a) Upolu Island

This looks all right in that priority is given to the Tanugamanono - Siumu major link which by the time of the construction in 1990 will be very much needed to reinforce the voltage as the 22kV distribution around Leulumoega through Lefaga to Safata and Falealili, from the Control Station in Apia will have covered about 50 miles (80km).

The priority rating 1 to 5 for areas covered is all right too. I have swapped Aleisa Road - Saleimoa to rating 8 with Satuimalufilufi - Satapuala to 10 and Lepale - Fasitoo-uta to 9.

(b) Savaii Island

This part of the Project may be done simultaneously with Upolu at an independent priority rating from that of Upolu with the preferred ratings as followed:

Tufutafoe	- Falealupotai	- 6
Tafuauta	- Tafuatai	- 7
Puapua	- Samalaeulu	- 11
Sasina	- Matavai	- 12

2. Equipment and materials stated under this clause should include light trucks, heavy trucks of 6 tons type, compressure complete hammer dynamites (if required in place of a Koken-Down-the-hole drill type).

The vehicle and equipment essentials are given on a separate sheet attached. Crossarms if wooden and line construction hardware should also where required be standard to ones (or equivalent) used currently by EPC.

It is worth noting also that the 6.6kV/22kV step up transformer to be installed at Puapua will be temporary until conversion of the existing Salelologa - Puapua 6.6kV to 22kV at a later stage.

3. Home Works and Field Works are all right except that shipment of materials takes about three (3) months from placement of order to be supplied if procured from New Zealand or Australia.

4. Please note that materials are duty free into Apia. At present status the engineers in Charge is Toluono assisted by A. Tiotio.

5. (a) The pole design is the same as in our Construction manual submitted to you.

   (b) Design Concept adopted is as in our construction manual submitted, based on the Australian Code of Practice for Overhead Line Construction by the Electricity Supply Association of Australia No. C (b) 1, 1974. All other design factors are all right except we use following safety factors for poles:

Wooden Poles	x 4
Concrete Poles	x 2
Steel Poles	x 2

   Ground Clearance for LV (415/240 volts) is 5.5m.

   (c) LINE MATERIALS

   AAC FLY is hard drawn 7/3.4mm stranded conductors.

   AAC WASP is also hard drawn 7/4.39mm stranded conductors.

   Colour of Insulators and Bushings: Light Grey

   (d) Distribution transformers sizes in the rural sector are determined mainly by the size of villages in population.

   (f) Wood poles preferred for standardisation and local construction gangs experience with handling.

   (g) A sawmill on this link have asked for a 100kVA substation with probable extension to 200kVA in two years.

(h) This clause is agreeable as it is.

(i) Provisional Pole Arrangement is ok except for the 14m poles where we have allowed 1.8m spacing between 66kV and 22kV although 1.5m space may be entertained for ease of maintenance.

6. Transformer erecting is still in progress between Lefaga and Siumu but had it not been for vehicle and machine break downs (old ones as no new ones assigned to this project) the whole section Leulumoega to Siumu would have finished by now.

T.F. Toluono

T.F. Toluono
DEPUTY GENERAL MANAGER-ENGINEERING

LINE TOOLS AND MACHINERY FOR THE RURAL ELECTRIFICATION PROJECT UNDER JAPANESE AID

Cable Hoist or Puller (3-4 Tons)	36
Compression Tools 12 Tons	10
Wire Grip 1659-40 Klien for 7/3.4 PVC	36
Wire Grip 1628-58 Klien for 19/2.6 steel guy	12
Cable Cutter for Hull	12
Ring Anger Bits 22mm	24
Ring Anger Bits 20mm	24
Ring Anger Bits 18 mm	24
Digging Crawbars 2m	24
Digging spades with 2m galv. handles	30
Digging shovels with 2m galv. handles	30

Heavy Trucks 6 Ton Flat Deck or Dyna	3
Hiab Cranes 7 Ton with Pole Trailers	3
Air Compressor (complete with hammers) (Rig Crawler type)	2
Toyota Landcruiser S.W.B.	1

西サモア概況

1．国名　THE STATE OF WESTERN SAMOA (SAMOA I SISFO)

2．位置　南緯13－14度　西経171－173度
日付変更線のすぐ東側、日本との時差20時間

3．面積　2、934 sq.km
（ｳﾎﾞﾙ島：1、122sq.km, ｻﾊﾞｲ島：1、714 sq。km、その他：98 sq.km)

4．人口　約160、000
（ｳﾎﾞﾙ島：117,800人, ｻﾊﾞｲ島：41,200人、その他：1、000人)

5．首都　アピア、人口　約35、000人

6．歴史

1722年	オランダ人探検家の来訪
1830年	キリスト教宣教師ジョン・ウイリアムスの上陸
1900年	ドイツ領となる
第一次大戦以降	国連委任統治領としてニュージランド領となる
第二時大戦以降	ニュージランド統治領となる
1962年	南太平洋の最初の独立を達成

7．言語　サモア語及び英語、教育程度は非常に高い

8．地勢　全て火山島、現在は休火山だが、最後の噴火は、1911年である。

9．気候　典型的な熱帯海洋性気候、平均気温26－27度、
年間降雨量2、800－3、000mm, 乾季：4月－10月　雨期：11月－3月

10．政治形態　立憲君主制、首相は国会で選出、首相は国会議員の中から8名の大臣を指名し内閣を組織する。

11．通貨　通貨単位はタラ（Tala＝WS$）現在の交換レートは1タラ約60円

12．財政　歳入の大部分が、先進国や国際機関よりの借款、贈与に支えられている。1988年度の国家予算は、WS$7、000、000（約42億円相当）
国民一人当たりGNPは、US$660（1987年度）と推定される。

13．産業　西サモアは農業国で、主な産物は、コプラ、ココア、バナナ、タロイモ、果物は、パパイア、マンゴー、アボガドなどが豊富である。林業は、製材所が二箇所有り国内需要のほとんどを自給している。
西サモア周辺の海域は、カツオ、マグロの好漁場だが西サモアではまだ本格的な漁業は、行なわれていない。
観光産業には、特質すべき物があり、政府も観光客誘致に力を入れている。西サモアを訪れる人の数は、年間約３万人で、アメリカン・サモア、ニュージーランド、オーストラリア、アメリカ、西ドイツ、の順だが日本人は、まだ300人足らずで商用が多く観光目的は少ない。

14. 貿易

年間輸出総額	WS$25,000,000（約15億円）
年間輸入総額	WS$92,000,000（約55億円）
輸出品目	コプラ、ココア、タロイモ等農産物
輸入品目	機械、金属、食品、繊維、車輌、石油、ガソリン等
相手国	ニュージーランド、オーストラリア、日本、アメリカ

15. 賃金

労働賃金は安く、国家公務員の平均収入は、約36,000円/月

国会議員の歳費は、

総理大臣	約1,920,000円/年
大臣	約1,500,000円/年
一般議員	約 660,000円/年

西サモア発電設備

出典：EPC

摘　　要	定格出力 (kW)	低減出力 (kW)	設置場所	完成時期	注
ウポル島					
ディーゼル発電設備					
タヌガマノノNO.4	1,672	1,200	タヌガマノノ	1966	
タヌガマノノNO.5	1,672	1,200	タヌガマノノ	1966	
タヌガマノノNO.6	1,456	1,000	タヌガマノノ	1973	
タヌガマノノNO.7	1,800	1,200	タヌガマノノ	1979	
タヌガマノノNO.8	1,800	1,200	タヌガマノノ	1979	
タヌガマノノNO.9	2,250	2,000	タヌガマノノ	1984	
タヌガマノノNO.10	1,000	800	タヌガマノノ	1986	
タヌガマノノNO.11	1,000	500	タヌガマノノ	1986	
ディーゼル発電合計	12,650	9,100			
水力発電設備					
フルアソルNO.2	370	370	フルアソル	1985	
アラソア	1,000	1,000	アラソア	1982	
ファレオラフィ	1,600	1,500	アラソア	1982	
サマソニNO.1	900	725	ロトサマソニ	1982	
サマソニNO.2	900	725	ロトサマソニ	1982	
ラロマウガNO.1	1,750	1,750	ラロマウガ	1985	
ラロマウガNO.2	1,750	1,750	ラロマウガ	1985	
水力発電合計	8,270	7,820			
ウポル島発電設備合計	20,920	16,920			
サバイ島					
サレロロガ発電設備					
サレロロガNO.1	100	80	サレロロガ	1978	
サレロロガNO.2	100	80	サレロロガ	1978	現在故障、撤去
サレロロガNO.3	100	80	サレロロガ	1978	
サレロロガNO.4	380	380	サレロロガ	1985	
サレロロガNO.5	60	50	サレロロガ	1982	
サレロロガNO.6	60	50	サレロロガ	1982	
サレロロガNO.7	273	200	サレロロガ	1986	
サレロロガ発電設備合	1,073	920			
アサウ発電設備					
アサウNo.1	300	250	アサウ	1894	オーバーホール中、終了後
アサウNo.2	412	412	アサウ	1986	サレロロガに移設の予定
アサウ発電設備合計	712	662			
アサウ周波数変換機					
周波数変換機No.1	600	600	アサウ	1984	運転中止
周波数変換機No.2	600	600	アサウ	1984	運転中止
周波数変換機合計	1,200	1,200			
サバイ発電設備合計	2,985	2,782			

注
1. ディーゼル発電機の低減出力は、発電機の老化と冷却設備不備によるものである。
2. サマソニ水力発電所は、ペンストックの損失が大きく最大出力が出せない。
3. 0.85発電機出力は、力率を0.85としたものである。
4. アサウの周波数変換機は、サモア森林開発工場の破棄木材を燃料とした。60Hzの電力を50Hzに変換するものである。

西サモア配電設備

出典：EPC

変圧器

摘　　要	1981 (kVA)	1982 (kVA)	1983 (kVA)	1984 (kVA)	1985 (kVA)	1986 (kVA)	1987 (kVA)
ウポル配電系統							
単相 6.6 kV	727	552	325	300	300	297.5	345
三相 6.6kV	6,680	6,750	6,975	6,430	5,330	5,650	5,350
単相 22 kV	1,050	1,300	1,590	1,630	1,680	1,735	1,850
三相 22 kV	5,540	9,170	10,400	12,200	13,250	12,500	14,250
ウポル系統合計	13,997	17,772	19,290	20,560	20,560	20,183	21,795
サレロロガ配電系統							
単相 6.6 kV	333	325	325	325	325	365	365
三相 6.6 kV	150	200	250	250	250	250	250
単相 22 kV	-	-	-	-	50	50	105
三相 22 kV	-	-	-	-	150	150	150
二相 22 kV	-	-	-	-	-	120	120
サレロロガ系統合計	483	525	575	575	775	935	990
アサウ配電系統							
単相 6.6 kV	-	125	125	-	-	-	-
三相 6.6 kV	-	-	-	20	20	-	-
単相 22 kV	-	-	-	150	175	0	95
三相 22 kV	-	-	-	50	150	100	150
二相 22 kV	-	-	-	-	-	325	325
アサウ系統合計	0	125	125	220	345	425	570
サバイ系統合計	483	650	700	795	1,120	1,360	1,560

配電線

ウポル架空配電系統							
22 KV	97	115	151	158	174	177	182
6.6 KV	69	99	74	73	73	73	73
低圧線	217	320	335	350	370	396	419
ウポル地中配電系統							
22 KV	1	3	3	3	3.08	3.33	3.33
6.6 KV	1.45	1.45	1.45	1.50	1.50	1.50	1.50
ウポル合計	385.30	538.45	564.45	585.50	621.58	650.83	678.83
サレロロガ配電系統							
22 KV	-	-	-	-	13	21	21
6.6 KV	23	23	23	23	23	23	23
低圧線	30	45	45	53	63	72	72
アサウ配電系統							
22 KV	NA	NA	NA	28	40	44	72
2.2 KV	NA	10	15	-	-	-	-
低圧線	NA	12	27	27	32	40	78.37

ウポル配電系統負荷率

出典:EPC

タヌガマノノ・西海岸フィーダー (一般、一部産業負荷 Feb. 20, 1989 月曜)													
時間	0:00	2:00	4:00	6:00	8:00	10:00	12:00	14:00	16:00	18:00	20:00	22:00	
負荷	75	730	780	1,050	1,200	1,220	1,230	1,220	1,100	1,460	1,760	1,300	
電力量	150	1,460	1,560	2,100	2,400	2,440	2,460	2,440	2,200	2,920	3,520	2,600	26,250
ピーク負荷	1,900												
ピーク電力量													45,600
負荷率													0.58

タヌガマノノ・バイテレフィーダー (商業負荷 Mar. 3, 1989)													
時間	0:00	2:00	4:00	6:00	8:00	10:00	12:00	14:00	16:00	18:00	20:00	22:00	
負荷	890	800	840	1,150	2,050	2,040	240	2,150	1,750	1,350	1,300	1,000	
電力量	1,780	1,600	1,680	2,300	4,100	4,080	480	4,300	3,500	2,700	2,600	2,000	31,120
ピーク負荷	2,150												
ピーク電力量													51,600
負荷率													0.60

タヌガマノノ・病院フィーダー (商業負荷 Feb. 28, 1989 Mon)													
時間	0:00	2:00	4:00	6:00	8:00	10:00	12:00	14:00	16:00	18:00	20:00	22:00	
負荷	550	540	540	630	930	1,000	950	990	850	850	800	650	
電力量	1,100	1,080	1,080	1,260	1,860	2,000	1,900	1,980	1,700	1,700	1,600	1,300	18,560
ピーク負荷	1,100												
ピーク電力量													26,400
負荷率													0.70

タヌガマノノ・アラオアフィーダー (一般需要 Mar. 2, 1989)													
時間	0:00	2:00	4:00	6:00	8:00	10:00	12:00	14:00	16:00	18:00	20:00	22:00	
負荷	90	87	87	102	100	90	98	98	100	120	155	120	
電力量	180	174	174	204	200	180	196	196	200	240	310	240	2,494
ピーク負荷	164												
ピーク電力量													3,936
負荷率													0.63

タヌガマノノ・ロトパフィーダー (一般需要Mar. 8, 1989)													
時間	0:00	2:00	4:00	6:00	8:00	10:00	12:00	14:00	16:00	18:00	20:00	22:00	
負荷	90	65	63	105	98	97	100	110	140	180	130	90	
電力量	180	130	126	210	196	194	200	220	280	360	260	180	2,536
ピーク負荷	206												
ピーク電力量													4,944
負荷率													0.51

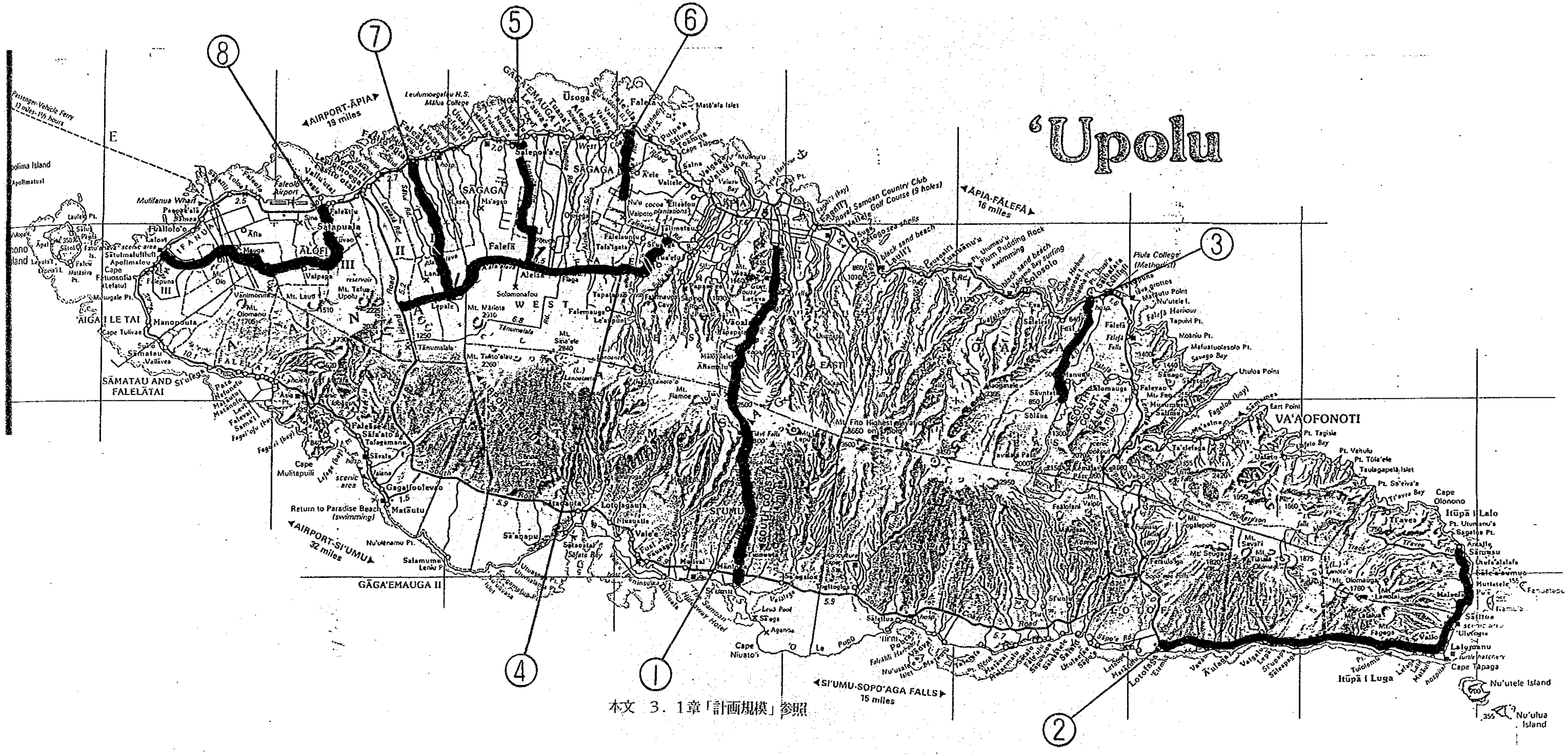

本文 3．1章「計画規模」参照

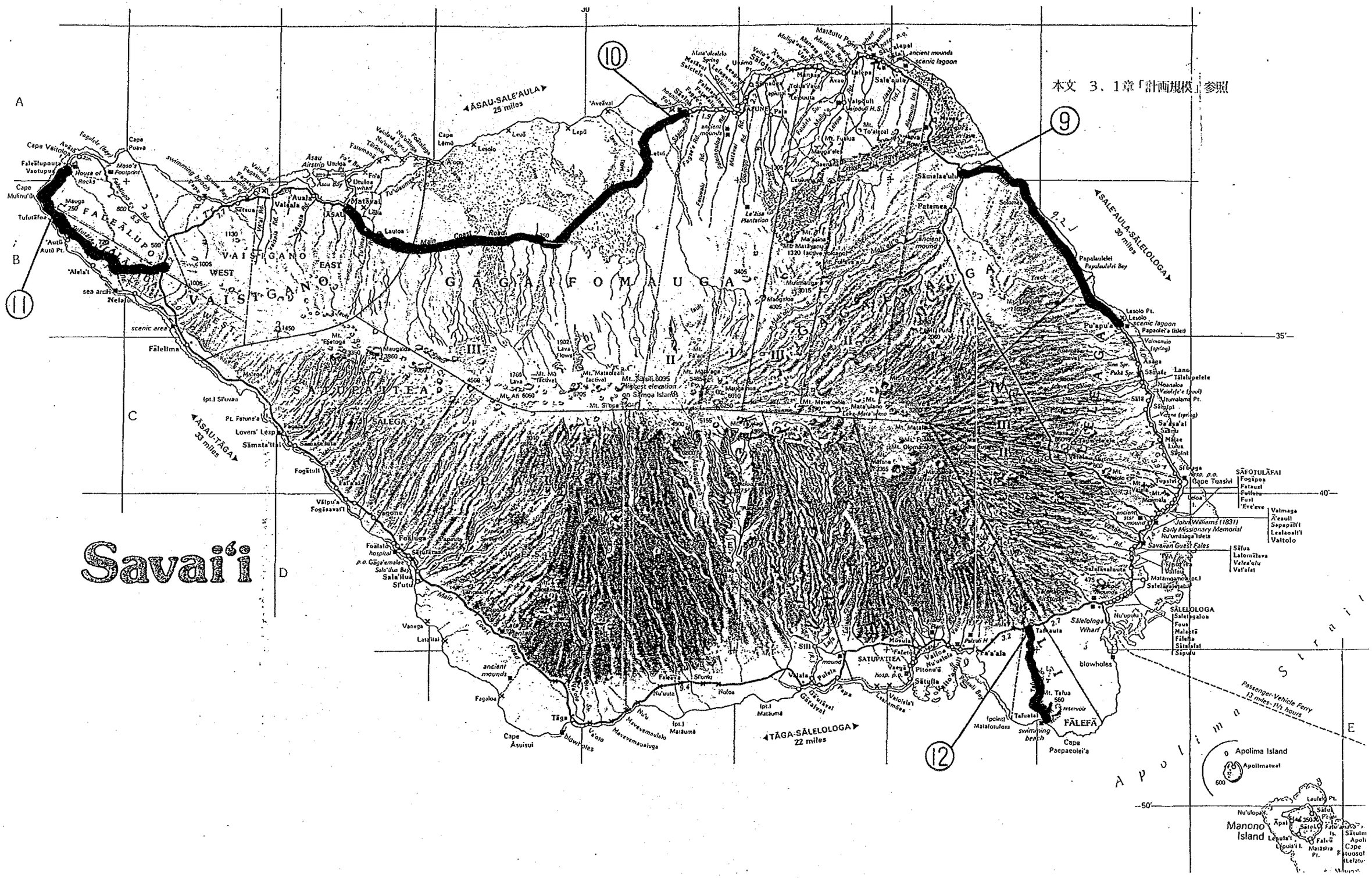
本文 3．1章「計画規模」参照
Savai'i
⑨
⑩
⑪
⑫
ĀSAU-SALE'AULA
25 miles
SALE'AULA-SĀLELOLOGA
30 miles
ĀSAU-TĀGA
33 miles
TĀGA-SĀLELOLOGA
22 miles
Passenger-Vehicle Ferry
13 miles-1½ hours
Apolima Strait
Apolima Island
Manono Island
FĀLEFĀ
SĀLELOLOGA
SĀFOTULĀFAI
SATUPA'ITEA
GAGAIFOMAUGA
VAISIGANO
FAUĀLUPO
SALEGA
Savai'i Island

最高気温

出典：EPC

年度	1月	2月	3月	4月	5月	6月	7月	8月	9月	10月	11月	12月
1941	31.9	31.8	31.3	31.7	31.1	31.6	29.8	30.8	31.0	30.8	32.4	32.4
1942	32.8	32.7	31.6	30.9	31.8	31.1	29.9	30.1	30.9	30.2	30.4	30.5
1943	30.8	30.9	31.2	31.2	30.3	30.2	30.1	30.1	30.2	30.9	32.1	31.0
1944	32.3	30.5	31.0	31.7	30.8	30.3	30.7	30.2	30.3	30.1	30.5	31.2
1945	31.2	31.0	31.0	32.0	30.7	30.9	29.9	30.1	30.0	31.0	31.2	31.2
1946	31.7	31.4	32.1	32.2	32.1	31.2	31.0	30.7	31.5	31.8	31.9	31.9
1947	31.9	32.7	32.8	32.6	32.4	31.6	31.6	31.5	31.4	31.4	31.4	31.1
1948	33.8	31.6	32.2	31.8	32.0	31.8	30.8	30.8	30.7	31.9	31.7	31.1
1949	31.6	31.9	32.2	31.8	31.6	30.9	31.6	30.4	31.3	30.8	31.8	31.0
1950	31.9	31.1	31.6	31.8	31.6	30.3	29.9	30.3	31.1	31.4	31.4	31.3
1951	31.0	31.9	31.3	32.3	31.6	31.1	30.8	31.2	30.9	30.7	31.6	32.2
1952	33.3	32.3	32.3	31.4	31.7	31.3	30.6	30.6	31.0	31.3	31.5	32.4
1953	31.8	32.1	32.8	32.2	32.7	31.2	30.4	30.6	31.6	31.7	32.3	32.2
1954	31.6	32.4	30.7	31.2	31.6	30.9	31.1	31.2	30.6	31.1	31.2	31.1
1955	31.3	31.2	31.0	31.6	31.1	30.6	30.3	29.8	29.9	30.2	31.1	30.4
1956	31.1	30.1	31.0	31.8	31.1	30.8	29.9	30.3	30.6	31.0	31.4	31.7
1957	31.1	31.7	31.8	31.4	31.7	31.2	30.2	31.6	30.8	31.1	31.7	31.1
1958	32.2	32.1	32.8	32.3	32.0	30.7	31.6	31.3	30.7	31.3	31.7	32.2
1959	32.0	32.7	31.8	31.9	32.0	31.8	31.3	30.6	31.4	31.1	31.6	31.6
1960	31.7	31.8	31.7	30.4	32.2	30.9	30.2	30.7	30.8	31.3	31.6	31.3
1961	31.6	31.6	31.8	31.7	31.2	30.4	30.3	30.3	30.5	30.4	30.7	31.2
1962	31.1	31.7	31.9	31.7	31.0	31.1	30.6	30.0	30.5	30.0	31.1	31.4
1963	31.1	31.7	31.2	31.4	31.9	31.6	30.6	31.1	31.1	31.6	31.4	31.7
1964	32.2	32.8	32.2	31.9	30.9	30.7	30.1	30.2	30.5	30.7	30.6	30.3
1965	32.1	30.9	32.3	31.2	31.2	30.5	30.7	30.6	30.8	30.7	31.7	31.9
1966	31.9	31.7	32.8	31.6	31.3	31.0	30.4	30.6	30.4	31.2	31.7	31.5
1967	31.1	31.1	31.6	30.6	30.7	31.0	30.7	29.6	30.6	30.6	30.8	31.2
1968	32.8	31.6	31.9	31.0	30.6	30.7	29.6	30.1	30.0	31.1	31.5	31.7
1969	32.3	32.3	31.7	31.3	30.8	31.6	30.6	30.6	30.6	31.7	31.9	31.7
1970	32.4	32.2	31.6	31.7	32.2	30.8	30.7	30.7	31.2	30.6	30.8	30.6
1971	31.4	31.7	30.5	30.7	30.6	30.7	30.3	29.8	29.9	30.3	32.0	31.5
1972	30.8	31.3	31.5	31.3	31.6	31.1	30.4	30.2	30.2	31.3	31.2	31.2
1973	31.4	31.6	32.0	31.6	31.9	31.2	30.6	30.0	30.8	30.3	30.4	30.5
1974	32.0	31.0	30.6	31.0	30.5	30.1	30.5	30.1	30.4	30.6	30.7	30.7
1975	33.4	30.8	31.3	30.8	30.9	30.1	30.5	30.1	30.4	30.6	30.7	30.7
1976	30.2	31.0	31.7	31.2	30.8	30.9	30.1	31.2	30.4	31.5	31.6	31.4
1977	31.3	31.8	31.9	32.2	31.9	31.3	30.6	30.2	30.6	31.4	31.6	32.4
1978	30.9	33.4	32.1	31.8	31.9	31.0	31.2	31.5	31.4	31.6	31.5	32.0
1979	32.0	32.0	31.8	32.0	32.3	31.9	31.2	32.1	31.4	32.0	31.4	32.2
1980	32.0	32.1	32.0	33.2	31.1	31.6	30.9	30.8	31.0	31.2	32.6	32.8
1981	32.2	32.8	32.1	-	-	-	31.3	31.0	31.3	31.2	32.0	32.0
1982	31.6	31.4	32.8	32.6	32.6	32.2	31.4	30.9	31.8	32.8	31.5	32.4
1983	32.5	33.6	33.0	32.8	32.4	32.1	31.3	30.4	31.2	32.0	32.2	32.4
1984	31.6	32.0	32.3	32.1	32.1	31.9	30.6	30.6	31.0	32.4	32.0	31.5
1985	33.0	31.5	32.9	32.5	32.0	31.5	30.7	31.2	-	-	-	-
最高気温	33.8	33.6	33.0	33.2	32.7	32.2	31.6	32.1	31.8	32.8	32.6	32.8

最高気温　　33.8 度　　(記録：1948年　1月)

最低温度

出典：EPC

年度	1月	2月	3月	4月	5月	6月	7月	8月	9月	10月	11月	12月
1941	21.6	23.1	22.0	22.9	22.0	21.5	20.1	21.6	21.7	19.8	22.2	21.6
1942	22.8	23.9	23.8	21.6	21.8	21.7	20.1	22.0	20.2	21.6	21.2	21.8
1943	22.7	23.0	22.6	23.9	22.7	20.9	20.9	20.0	21.3	21.9	22.5	22.9
1944	22.5	22.7	23.0	22.0	22.0	22.8	20.1	21.0	22.6	20.1	22.2	21.8
1945	21.5	22.9	22.5	22.9	21.8	21.8	22.8	20.0	21.8	22.8	21.8	23.0
1946	22.9	22.8	22.8	22.2	22.6	21.7	19.7	20.8	20.9	20.8	22.9	20.7
1947	22.4	22.9	21.9	22.7	20.8	21.8	21.3	19.5	21.0	20.1	22.6	22.1
1948	21.7	22.9	22.3	22.4	22.7	20.8	19.7	19.7	20.6	21.9	21.3	21.7
1949	21.6	22.7	22.0	22.2	21.7	20.0	18.8	20.6	22.0	20.7	21.9	22.7
1950	22.2	21.9	21.9	21.8	21.7	20.9	20.5	20.8	19.7	20.9	21.3	21.4
1951	22.9	21.9	22.8	23.8	21.1	21.6	17.9	19.4	19.7	19.8	21.1	20.8
1952	22.7	22.6	22.2	20.7	20.6	20.8	20.9	20.0	19.7	20.6	21.7	22.7
1953	22.0	22.6	23.8	22.3	21.1	20.7	19.9	19.8	18.7	21.7	21.9	20.6
1954	21.7	22.3	21.6	21.1	21.1	21.8	19.0	21.6	21.1	21.7	21.6	22.0
1955	21.7	21.7	21.1	21.3	21.5	21.7	21.6	20.3	20.1	21.6	21.0	21.6
1956	20.6	21.6	21.7	21.9	21.0	19.5	19.9	20.6	19.8	20.5	20.8	21.4
1957	21.7	21.8	21.6	22.6	20.5	19.6	19.7	18.7	20.0	20.0	20.7	20.8
1958	21.7	21.8	22.7	23.4	21.6	20.9	17.7	18.9	19.6	20.3	21.9	21.5
1959	21.9	22.9	22.6	22.9	21.9	20.6	19.6	21.0	19.9	22.2	21.9	22.9
1960	21.9	22.6	22.8	23.6	22.1	20.9	19.9	20.7	19.6	20.6	21.5	22.8
1961	22.2	22.1	21.7	21.9	22.7	20.3	19.7	20.8	21.7	20.7	22.7	21.7
1962	22.2	23.6	22.8	22.2	22.0	19.6	20.6	20.6	21.7	20.6	21.7	21.7
1963	21.9	22.8	22.2	21.6	21.7	19.9	20.6	21.9	20.8	21.8	21.2	21.7
1964	21.1	22.8	22.7	22.1	20.4	20.3	19.6	19.4	20.9	21.3	20.6	21.7
1965	21.7	19.4	21.6	22.3	21.8	19.7	18.6	20.0	21.6	21.9	20.1	21.0
1966	22.9	21.6	22.2	21.1	22.3	21.6	20.8	18.6	19.9	21.7	21.7	19.9
1967	20.6	21.2	21.9	21.7	21.1	20.5	20.0	18.3	21.1	20.6	20.8	20.8
1968	21.9	22.3	22.7	19.5	21.0	20.7	21.6	19.4	19.4	21.7	20.8	21.7
1969	22.3	22.8	22.5	22.8	21.0	20.9	20.0	20.8	19.8	22.1	22.8	21.7
1970	21.7	21.1	22.7	22.1	21.5	22.8	19.6	20.4	18.1	21.2	21.6	21.5
1971	21.1	22.0	22.4	22.0	21.6	20.4	19.7	19.6	19.2	21.6	20.8	22.2
1972	21.9	21.9	21.6	22.4	20.8	21.6	20.2	20.3	21.9	20.5	21.6	23.0
1973	21.0	22.6	23.6	22.8	22.1	20.8	20.5	20.4	20.2	20.9	21.4	22.1
1974	22.1	21.1	21.6	21.3	19.6	19.6	19.1	21.4	20.0	20.4	19.3	21.6
1975	21.4	21.6	22.5	22.4	21.1	20.3	20.4	20.3	20.6	21.0	21.4	22.0
1976	20.4	21.5	22.0	22.5	21.6	20.9	20.2	19.8	18.7	21.4	21.8	20.7
1977	20.2	22.4	21.2	21.1	19.5	18.9	19.3	18.9	19.1	21.6	21.7	21.3
1978	22.6	21.4	21.5	22.2	21.6	20.7	19.2	20.7	19.2	21.5	19.2	22.0
1979	21.9	21.9	22.4	21.4	21.2	22.1	24.0	18.1	20.5	21.2	21.5	20.9
1980	21.5	23.2	22.7	21.5	20.5	19.1	21.2	21.9	21.9	21.9	18.5	19.0
1981	19.6	18.1	19.5	-	-	-	17.5	14.7	17.5	20.5	20.1	20.5
1982	23.0	21.4	22.4	23.0	22.0	20.9	20.2	20.4	20.4	20.1	21.4	21.0
1983	21.7	23.5	22.6	20.8	21.7	20.2	20.1	18.5	21.0	22.0	21.1	22.6
1984	20.9	22.5	23.1	22.7	20.8	20.3	19.0	20.4	20.5	20.3	21.8	22.4
1985	21.9	22.9	22.3	21.9	22.1	21.5	20.5	21.3	-	-	-	-
最低温度	19.6	18.1	19.5	19.5	19.5	18.9	17.5	14.7	17.5	19.8	18.5	19.0

最低温度:　　14.7 度　　(記録：1981年8月)

風速（突風）

出典：EPC

年度	1月	2月	3月	4月	5月	6月	7月	8月	9月	10月	11月	12月
1941	25	39	55	35	33	30	34	30	35	38	50	33
1942	30	38	36	39	28	43	44	41	41	38	29	33
1943	32	26	41	31	28	20	35	36	38	36	28	33
1944	42	33	35	32	32	29	36	38	42	37	28	29
1945	34	36	40	38	29	37	31	32	41	41	33	30
1946	33	38	26	26	29	38	31	39	32	33	30	46
1947	36	26	36	42	36	36	42	39	45	38	27	36
1948	42	42	42	36	35	41	41	36	37	39	32	49
1949	25	39	41	29	44	38	37	41	39	37	37	37
1950	44	41	38	35	32	43	28	34	35	34	31	44
1951	30	41	32	29	30	36	33	29	38	42	36	29
1952	38	37	36	34	34	43	35	31	43	47	27	39
1953	29	35	29	36	38	33	45	29	29	37	42	25
1954	36	42	39	36	43	34	44	37	41	44	35	34
1955	32	46	33	32	39	35	35	45	51	41	35	42
1956	39	38	33	35	30	39	39	33	37	34	29	34
1957	34	65	31	33	28	42	35	34	30	34	34	47
1958	44	31	44	29	48	33	32	36	32	37	33	27
1959	37	42	37	32	33	33	37	32	38	41	34	39
1960	52	34	39	34	36	38	39	35	34	32	33	38
1961	34	43	53	32	35	45	34	29	41	43	31	28
1962	41	37	38	29	43	35	29	47	42	35	31	46
1963	31	34	42	39	31	39	29	34	31	31	33	33
1964	37	34	40	44	33	39	33	37	37	39	33	28
1965	33	33	31	35	36	44	41	33	36	36	28	30
1966	82	35	33	36	34	43	32	33	41	30	33	35
1967	52	37	35	38	35	36	41	52	36	38	36	42
1968	40	78	34	42	28	37	39	28	32	40	31	31
1969	43	43	39	35	39	28	34	32	33	32	34	36
1970	51	47	41	33	32	38	39	36	35	34	28	30
1971	32	28	38	41	34	44	31	33	39	38	35	41
1972	40	32	30	36	29	36	32	38	38	37	36	51
1973	47	37	30	36	36	38	33	36	34	39	38	33
1974	41	37	45	34	42	41	37	28	39	34	35	44
1975	52	36	38	38	34	38	43	37	38	33	38	40
1976	36	42	39	-	-	-	-	-	28	34	30	40
1977	42	32	34	41	33	37	37	31	40	-	-	43
1978	41	30	35	23	35	31	34	30	37	35	38	43
1979	42	35	32	40	30	39	36	32	35	40	34	37
1980	33	44	42	32	27	41	32	36	36	35	26	32
1981	37	46	45	-	-	-	-	32	33	45	35	30
1982	-	49	-	25	38	33	31	-	29	28	38	22
1983	23	-	28	32	32	43	36	34	36	30	26	35
1984	29	36	33	31	33	38	34	38	31	33	28	38
1985	32	29	35	35	43	33	36	32	-	-	-	-
最大風速	82	78	55	44	48	45	45	52	51	47	50	51
m/sec	42	40	28	23	25	23	23	27	26	24	26	26

最高風速（突風）：98ノット(約42m/秒)
1ノット=1853M/時=0.:0.5147 m/sec

年間雷発生日数

出典：EPC

	1月	2月	3月	4月	5月	6月	7月	8月	9月	10月	11月	12月	計
1941	5	5	5	3	2	1	0	1	1	3	2	6	34
1942	7	9	20	10	4	2	1	3	5	4	6	9	80
1943	4	7	6	5	9	0	1	0	2	3	17	13	67
1944	6	5	6	5	4	2	0	1	1	1	0	3	34
1945	5	0	2	2	3	4	1	8	1	4	7	3	40
1946	7	2	13	7	6	1	0	0	0	7	19	14	76
1947	13	10	14	12	8	9	5	2	8	6	8	11	106
1948	7	6	10	9	9	2	1	1	1	6	5	11	68
1949	10	11	3	9	14	3	4	3	5	14	6	9	91
1950	8	13	2	10	14	5	4	2	1	11	15	12	97
1951	6	12	3	15	11	8	0	0	0	8	9	11	83
1952	1	15	9	6	5	3	0	3	2	8	4	12	68
1953	7	7	8	16	7	2	2	0	0	6	5	4	64
1954	8	8	3	11	9	9	2	4	3	17	14	7	95
1955	10	9	4	3	3	2	0	5	3	14	19	19	91
1956	9	5	9	7	1	5	0	0	0	4	3	8	51
1957	5	2	7	9	5	3	3	0	0	0	4	3	41
1958	2	4	13	9	3	0	1	1	3	2	3	4	45
1959	2	2	8	8	8	1	2	3	3	6	6	6	55
1960	1	3	2	6	5	1	0	0	3	3	7	11	42
1961	11	12	5	5	2	6	0	1	1	7	8	7	65
1962	8	3	9	13	11	6	2	8	0	8	6	7	81
1963	10	13	11	12	5	2	3	0	1	6	4	4	71
1964	6	6	9	15	8	13	1	2	5	5	4	6	80
1965	4	4	5	10	10	5	2	0	0	5	3	7	55
1966	8	4	10	9	12	6	3	5	4	5	13	13	92
1967	8	11	9	7	3	4	5	2	1	5	11	5	71
1968	6	8	9	8	10	1	2	1	0	8	4	10	67
1969	6	8	16	6	5	1	4	2	3	11	10	13	85
1970	14	4	7	2	5	4	1	3	3	6	13	3	65
1971	9	7	4	7	7	2	0	0	2	3	12	8	61
1972	5	10	11	11	1	1	1	0	0	6	3	3	52
1973	5	3	5	10	5	3	2	7	6	8	6	5	65
1974	5	3	9	5	10	3	0	0	3	7	7	7	59
1975	4	11	14	6	13	2	6	2	0	5	2	4	69
1976	1	6	7	7	5	2	0	0	0	3	10	8	49
1977	11	7	6	6	4	2	2	0	0	0	4	5	47
1978	12	8	2	3	1	3	3	1	1	2	1	5	42
1979	3	10	4	6	3	0	0	0	4	1	2	3	36
1980	6	5	5	3	3	5	0	0	0	5	0	0	32
1981	11	0	0	-	-	-	1	2	2	0	11	9	36
1982	2	4	3	6	2	0	0	0	1	3	0	2	23
1983	1	0	3	1	0	0	0	0	0	5	3	5	18
1984	4	1	2	3	3	5	0	0	1	0	2	8	29
1985	3	1	3	10	3	1	2	2	-	-	-	-	25

年間最大雷発生日数：106　(1947年)
平均雷発生日数：60

添付資料4－1 理由書

REASONS FOR EPC CONSTRUCTING IN AREAS PREVIOUSLY ALLOCATED TO JAPANESE AID

1. **General Reasons**

   (a) EPC construction gangs are working faster than expected this means they had to carry on into adjacent areas. They are erecting lines at four times the normal pace.

   (b) There is political pressure from the public and politicians.

2. **Savaii**

   (a) The L.D.S. Church has collected US$30,000 from U.S.A. to contribute to the cost of the line for an early start to the work from Fusi to Vaiola.

   (b) Rural Electrification Committee decided on 11 October to undertake the work from Fusi to Vaiola.

3. **Upolu**

   (a) The neighbouring districts having seen the start of our work at Leulumoega directly approached EPC, and also approached their Members of Parliament for power extension. This of course was readily re-enforced by MP's who in turn applied extreme pressure on EPC directly and more effectively through their colleagues in the Rural Electrification Committee and EPC Board.

   (b) EPC was firmly backed by Government financially as evidenced by allocation of a further two (2) million Tala in this year's Supplementary budget. This is in addition to 1.5 million Tala allocated in 1988 for the Rural Electrification budget for 1989.

4. **Direction**

   The Rural Electrification Committee decided:

   (a) At its meeting on 12 September 1989 to extend work further along the south coast of Upolu towards Salani (Sopoaga).

   (b) At its meeting on 11 October - to extend lines from Fusi to Vaiola.

E J Hussey
GENERAL MANAGER
18 October 1989.

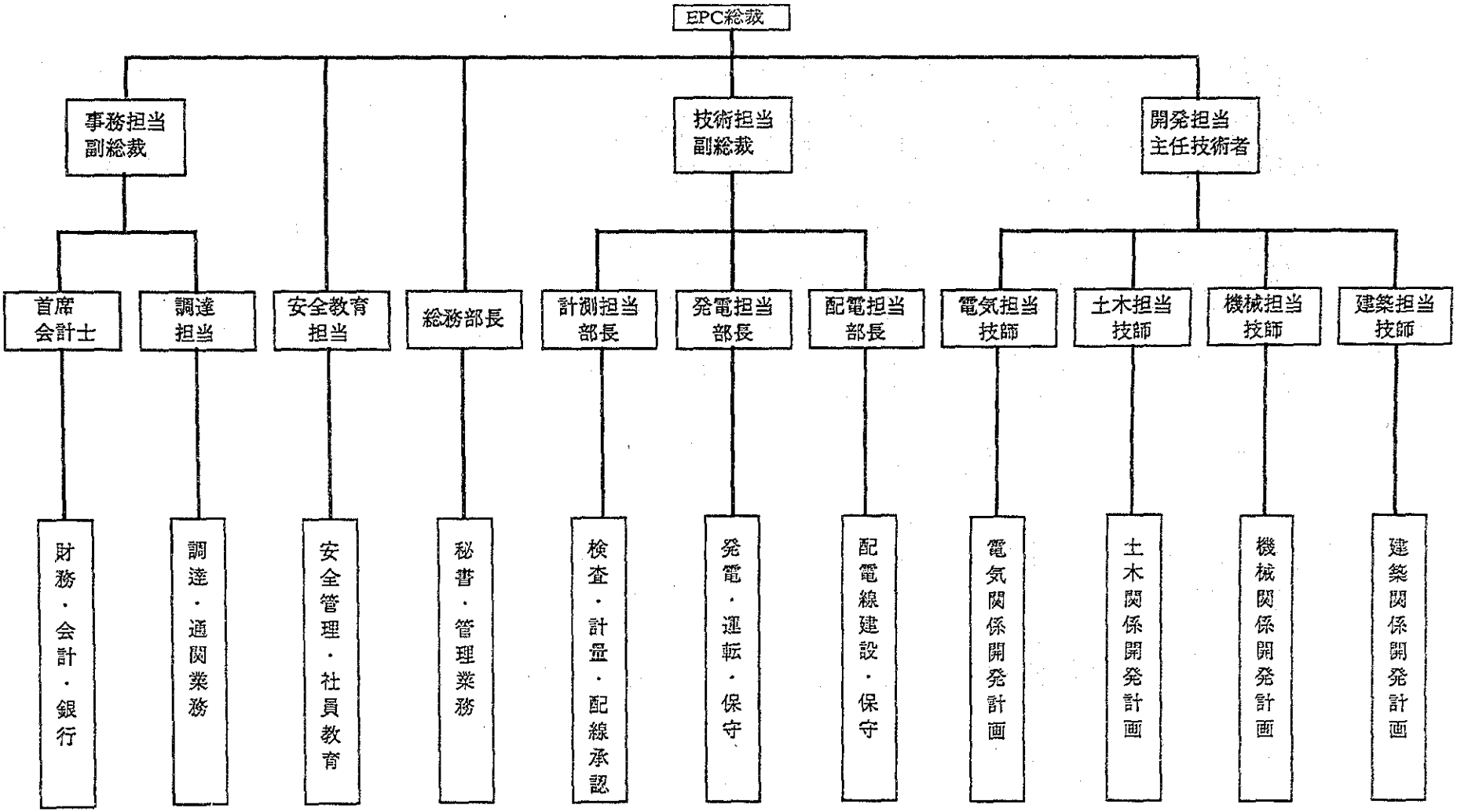
EPC総裁
事務担当
副総裁
技術担当
副総裁
開発担当
主任技術者
首席
会計士
調達
担当
安全教育
担当
総務部長
計測担当
部長
発電担当
部長
配電担当
部長
電気担当
技師
土木担当
技師
機械担当
技師
建築担当
技師
財務・会計・銀行
調達・通関業務
安全管理・社員教育
秘書・管理業務
検査・計量・配線承認
発電・運転・保守
配電線建設・保守
電気関係開発計画
土木関係開発計画
機械関係開発計画
建築関係開発計画

EPC組織図

発電電力量

出典:EPC

ウポル電力系統

年度	単位	1981	1982	1983	1984	1985	1986	1987
発電電力量	(GWH)	29.790	30.279	31.104	32.952	34.764	35.950	38.254
消費電力量	(GWH)	24.455	24.478	25.426	27.595	27.712	30.037	32.078
その他	(GWH)	0.336	0.269	0.243	0.253	0.620	0.721	0.642
損失電力量	(GWH)	4.999	5.532	5.435	5.104	5.432	5.191	5.534
損失率	%	16.8	18.3	17.5	15.5	15.6	14.4	14.5

サバイ電力系統

サレロロガ系統

年度	単位	1981	1982	1983	1984	1985	1986	1987
発電電力量	(GWH)	0.801	0.898	0.883	0.853	1.017	1.308	1.460
消費電力量	(GWH)	0.748	0.717	0.679	0.660	0.818	1.108	1.144
その他	(GWH)	0.009	0.010	0.010	0.018	0.014	0.019	0.044
損失電力量	(GWH)	0.043	0.171	0.194	0.175	0.185	0.181	0.271
損失率	%	5.5	19.1	22.0	20.5	18.2	13.8	18.6

アサウ系統

年度	単位	1981	1982	1983	1984	1985	1986	1987
発電電力量	(GWH)	0	0	0	0	0	0.557	0.512
消費電力量	(GWH)	0	0	0	0	0	0.342	0.411
その他	(GWH)	0	0	0	0	0	0.000	0.000
損失電力量	(GWH)	0	0	0	0	0	0.214	0.101
損失率	%	0	0	0	0	0	38.4	19.7

サモア全系統合計

年度	単位	1981	1982	1983	1984	1985	1986	1987
発電電力量	(GWH)	30.591	31.177	31.987	33.805	35.781	37.815	40.226
消費電力量	(GWH)	25.203	25.195	26.105	28.255	28.53	31.487	33.633
その他	(GWH)	0.345	0.279	0.253	0.271	0.634	0.74	0.686
損失電力量	(GWH)	5.042	5.703	5.629	5.279	5.617	5.586	5.906
損失率	%	16.48	18.29	17.60	15.62	15.70	14.77	14.70

販売電力量

出典:EPC

ウボル電力系統

年度	単位	1981	1982	1983	1984	1985	1986	1987	1988
一般需要	(GWH)	9,259	6,514	7,051	7,340	7,404	8,291	8,912	9,986
産業需要	(GWH)	1,626	2,921	3,376	3,887	3,727	3,650	3,798	4,037
商業需要	(GWH)	5,399	11,782	10,098	12,278	12,289	12,688	13,455	15,015
ホテル需要	(GWH)	1,723	1,554	1,395	1,675	1,684	1,701	1,707	1,788
宗教需要	(GWH)	-	574	1,006	1,545	2,032	2,188	2,298	2,416
学校需要	(GWH)	-	948	1,279	1,313	1,298	1,290	1,398	1,627
街路燈	(GWH)	176	185	222	228	263	250	281	261
合計		18,183	24,478	24,427	28,266	28,697	30,058	31,849	35,130
比率			34.6	-0.2	15.7	1.5	4.7	6.0	10.3

サバイ電力系統

サレロロガ系統

年度	単位	1981	1982	1983	1984	1985	1986	1987	1988
一般需要	(GWH)	284	292	253	288	367	489	595	743
産業需要	(GWH)	0	0	0	0	0	0	0	0
商業需要	(GWH)	214	382	367	349	389	484	512	513
ホテル需要	(GWH)	10	8	12	12	10	7	11	9
宗教需要	(GWH)	0	12	22	23	27	38	42	64
学校需要	(GWH)	0	8	10	8	11	17	24	25
街路燈	(GWH)	13	14	15	15	15	15	12	14
合計		521	716	679	695	819	1,050	1,196	1,368
比率			37.4	-5.2	2.4	17.8	28.2	13.9	14.4

アサウ系統

年度	単位	1981	1982	1983	1984	1985	1986	1987	1988
一般需要	(GWH)	0	31	41	41	91	121	168	289
産業需要	(GWH)	0	0	1	0	0	0	0	0
商業需要	(GWH)	0	16	90	88	135	154	160	194
ホテル需要	(GWH)	0	1	0	13	31	25	51	45
宗教需要	(GWH)	0	3	2	3	9	7	11	20
学校需要	(GWH)	0	0	0	0	0	0	1	0
街路燈	(GWH)	0	0	0	0	0	0	0	0
合計		0	51	134	145	266	307	391	548
比率				163.5	7.9	83.4	15.4	27.3	40.3

需要家数

出典;EPC

ウポル電力系統

年度	単位	1,981	1982	1983	1984	1985	1986	1987	1988
一般需要家	(Nos)	6,319	6,243	6,508	6,869	7,061	7,506	7,708	7,870
産業需要家	(Nos)	88	79	82	67	64	68	58	56
需要家	(Nos)	719	718	761	673	655	707	674	632
ホテル需要家	(Nos)	4	4	5	11	11	12	11	10
政府需要公共需要		202	0	0	0	0	0	0	0
宗教需要家	(Nos)	0	207	230	227	233	233	233	232
学校需要家	(Nos)	0	109	116	93	88	93	96	98
合計	(Nos)	7,332	7,360	7,702	7,940	8,112	8,619	8,780	8,898

サバイ電力系統

サレロロガ系統

年度	単位	1,981	1982	1983	1984	1985	1986	1987	1988
一般需要家	(Nos)	702	684	661	688	978	1,154	1,282	1,419
産業需要家	(Nos)	0	0	0	0	0	0	0	0
需要家	(Nos)	25	41	40	45	52	57	62	67
ホテル需要家	(Nos)	1	1	1	2	2	2	2	2
政府需要公共需要		17	0	0	0	0	0	0	0
宗教需要家	(Nos)	0	25	28	31	41	53	64	66
学校需要家	(Nos)	0	2	2	4	5	8	10	10
合計	(Nos)	745	753	732	770	1,078	1,274	1,420	1,564

アサウ系統

年度	単位	1,981	1982	1983	1984	1985	1986	1987	1988
一般需要家	(Nos)	0	55	93	135	224	286	494	738
産業需要家	(Nos)	0	0	1	0	0	0	0	0
需要家	(Nos)	0	2	16	17	24	36	28	31
ホテル需要家	(Nos)	0	1	1	2	2	2	2	2
政府需要公共需要		0	0	0	0	0	0	0	0
宗教需要家	(Nos)	0	1	5	7	11	13	21	31
学校需要家	(Nos)	0	0	0	0	0	1	1	3
合計	(Nos)	0	59	116	161	261	338	546	805

サモア全系統

年度	単位	1,981	1982	1983	1984	1985	1986	1987	1988
一般需要家	(Nos)	7,021	6,982	7,262	7,692	8,263	8,946	9,484	10,027
産業需要家	(Nos)	88	79	83	67	64	68	58	56
需要家	(Nos)	744	761	817	735	731	800	764	730
ホテル需要家	(Nos)	5	6	7	15	15	16	15	14
政府需要公共需要		219	0	0	0	0	0	0	0
宗教需要家	(Nos)	0	233	263	265	285	299	318	329
学校需要家	(Nos)	0	111	118	97	93	102	107	111
合計	(Nos)	8,077	8,172	8,550	8,871	9,451	10,231	10,746	11,267

1987年まではEPCのDATAより
1988年以降は想定値

「西サモア・ウポル島電力需要想定」

	1981	1982	1983	1984	1985	1986	1987	1988	1989	1990	1991	1992	1993	1994	1995	1996	1997	1998	1999	2000	2001
一般需要																					
人口	[1986年度国勢調査を基準とする]					112,478	113,603	114,739	115,886	117,045	118,216	119,398	120,592	121,798	123,016	124,246	125,488	126,743	128,010	129,291	130,583
電化率 (%)						75	75	75	78	83	88.8	91.2	92	92	93	93	94	94	95	95	95
電化地域人口						84,359	85,202	86,054	90,391	97,147	104,975	108,891	110,944	112,054	114,404	115,548	117,959	119,138	121,610	122,826	124,054
需要家数	6,319	6,243	6,508	6,869	7,061	7,506	7,708	7,870	8,217	8,832	9,543	9,899	10,086	10,187	10,400	10,504	10,724	10,831	11,055	11,166	11,278
需要家当たり家族数						11	11	11	11	11	11	11	11	11	11	11	11	11	11	11	11
需要電力量 (MWh)	9,259	6,514	7,051	7,340	7,404	8,291	8,912	9,986	10,948	12,355	14,018	15,268	16,333	17,322	18,569	19,693	21,109	22,386	23,992	25,444	26,983
需要家当たり消費電力(kWh)	1,465	1,043	1,083	1,069	1,049	1,105	1,156	1,269	1,332	1,399	1,469	1,542	1,619	1,700	1,785	1,875	1,968	2,067	2,170	2,279	2,393
需要家年間当たり増加率	-	0.712	1.038	0.986	0.981	1.053	1.047	1.097	1.050	1.050	1.050	1.050	1.050	1.050	1.050	1.050	1.050	1.050	1.050	1.050	1.050
年間需要増加率		0.704	1.082	1.041	1.009	1.120	1.075	1.121	1.096	1.128	1.135	1.089	1.070	1.061	1.072	1.061	1.072	1.060	1.072	1.060	1.061
産業需要																					
需要電力量 (MWh)	1,626	2,921	3,376	3,887	3,727	3,650	3,798	4,037	4,077	4,592	4,898	5,224	5,572	5,943	6,338	6,760	7,210	7,690	8,202	8,747	9,330
需要家数	88	79	82	67	64	68	58	56	57	57	58	58	59	59	60	61	61	62	62	63	64
需要家の年間当たり増加率	-	0.898	1.038	0.817	0.955	1.063	0.853	0.966	1.010	1.010	1.010	1.010	1.010	1.010	1.010	1.010	1.010	1.010	1.010	1.010	1.010
需要家当たり消費電力(kWh)	18,477	36,975	41,171	58,015	58,234	53,676	65,483	72,089	76,126	80,389	84,891	89,645	94,665	99,966	105,565	111,476	117,719	124,311	131,273	138,624	146,387
需要家当たり年間需要増加率	-	2.001	1.113	1.409	1.004	0.922	1.220	1.101	1.056	1.056	1.056	1.056	1.056	1.056	1.056	1.056	1.056	1.056	1.056	1.056	1.056
商業需要																					
需要電力量 (MWh)	5,399	11,782	10,098	12,278	12,289	12,688	13,455	15,015	15,712	16,441	17,204	18,002	18,838	19,712	20,627	21,584	22,586	23,634	24,731	25,878	27,079
需要家数	713	718	761	673	655	707	707	707	715	724	733	742	750	759	769	778	787	797	806	816	826
需要家の年間当たり増加率	-	1.007	1.060	0.884	0.973	1.079	1.000	1.000	1.012	1.012	1.012	1.012	1.012	1.012	1.012	1.012	1.012	1.012	1.012	1.012	1.012
需要家当たり消費電力(kWh)	7,572	16,409	13,269	18,244	18,762	17,946	19,031	21,238	21,960	22,706	23,478	24,277	25,102	25,955	26,838	27,750	28,694	29,670	30,678	31,721	32,800
需要家当たり年間需要増加率	-	2.167	0.809	1.375	1.028	0.957	1.060	1.116	1.034	1.034	1.034	1.034	1.034	1.034	1.034	1.034	1.034	1.034	1.034	1.034	1.034
ホテル需要																					
需要電力量 (MWh)	1,723	1,554	1,395	1,675	1,684	1,701	1,707	1,788	1,842	1,973	2,072	2,177	2,286	2,402	2,523	2,650	2,783	2,924	3,071	3,226	3,388
需要家数	4	4	5	11	11	12	11	10	10	10	10	10	11	11	11	11	11	11	11	11	11
需要家当たり消費電力(kWh)	430,750	388,500	279,000	152,273	153,091	141,750	155,182	178,800	185,952	193,390	201,126	209,171	217,538	226,239	235,289	244,700	254,488	264,668	275,254	286,265	297,715
需要家当たり年間需要増加率	-	0.902	0.718	0.546	1.005	0.926	1.095	1.152	1.040	1.040	1.040	1.040	1.040	1.040	1.040	1.040	1.040	1.040	1.040	1.040	1.040
宗教需要																					
需要電力量 (MWh)		574	1006	1545	2032	2188	2,298	2,416	2,704	3,027	3,388	3,792	4,244	4,750	5,317	5,951	6,661	7,455	8,344	9,340	10,453
需要家数	-	207	230	227	233	233	235	238	241	243	246	249	252	255	258	261	265	268	271	274	278
需要家の年間当たり増加率	-	-	1.111	0.987	1.026	1.000	1.010	1.010	1.012	1.012	1.012	1.012	1.012	1.012	1.012	1.012	1.012	1.012	1.012	1.012	1.012
需要家当たり消費電力(kWh)	-	2,773	4,374	6,806	8,721	9,391	9,765	10,165	11,242	12,434	13,752	15,210	16,822	18,605	20,577	22,758	25,171	27,839	30,790	34,053	37,663
需要家当たり年間需要増加率	-	-	1.577	1.556	1.281	1.077	1.040	1.041	1.106	1.106	1.106	1.106	1.106	1.106	1.106	1.106	1.106	1.106	1.106	1.106	1.106
学校需要																					
需要電力量 (MWh)		948	1,279	1,313	1,298	1,290	1,398	1,627	1,691	1,813	1,914	2,021	2,133	2,252	2,378	2,510	2,650	2,797	2,953	3,117	3,291
需要家数	-	109	116	93	88	98	99	100	102	104	106	108	110	112	114	116	118	121	123	125	128
需要家の年間当たり増加率	-	-	1.064	0.802	0.946	1.114	1.010	1.010	1.019	1.019	1.019	1.019	1.019	1.019	1.019	1.019	1.019	1.019	1.019	1.019	1.019
需要家当たり消費電力(kWh)	-	8,697	11,026	14,118	14,750	13,163	14,124	16,275	16,861	17,468	18,097	18,748	19,423	20,122	20,847	21,597	22,375	23,180	24,015	24,879	25,775
需要家当たり年間需要増加率	-	-	1.268	1.280	1.045	0.892	1.073	1.152	1.036	1.036	1.036	1.036	1.036	1.036	1.036	1.036	1.036	1.036	1.036	1.036	1.036
道路照明需要																					
需要電力量 (MWh)	176	185	222	228	263	250	281	261	270	279	289	298	308	319	330	341	353	365	377	390	403
年間需要増加率	-	1.051	1.200	1.027	1.154	0.951	1.124	0.929	1.034	1.034	1.034	1.034	1.034	1.034	1.034	1.034	1.034	1.034	1.034	1.034	1.034
総消費電力量(MWh)	18,183	24,478	24,427	28,266	28,697	30,058	31,849	35,130	37,244	40,480	43,782	46,782	49,715	52,699	56,081	59,488	63,350	67,250	71,670	76,142	80,928
系統損失(MWh)	4,999	5,532	5,435	5,104	5,432	5,191	5,534	5,499	5,922	6,396	6,874	7,298	7,706	8,116	8,580	9,042	9,566	10,087	10,679	11,269	11,896
損失率(%)	27.49	22.60	22.25	18.06	18.93	17.27	17.38	15.65	15.90	15.80	15.70	15.60	15.50	15.40	15.30	15.20	15.10	15.00	14.90	14.80	14.70
系統総電力量(MWh)	23,182	30,010	29,862	33,370	34,129	35,249	37,383	40,629	43,166	46,876	50,656	54,079	57,421	60,815	64,661	68,530	72,916	77,337	82,349	87,411	92,825
負荷率	0.55	0.55	0.56	0.56	0.56	0.57	0.57	0.57	0.57	0.58	0.58	0.58	0.58	0.58	0.59	0.59	0.59	0.59	0.59	0.60	0.60
ピーク電力(kW)	4,812	6,229	6,087	6,802	6,957	7,059	7,487	8,137	8,645	9,226	9,970	10,644	11,302	11,969	12,511	13,259	14,108	14,963	15,933	16,631	17,661
年間電力増加率	-	1.295	0.995	1.117	1.023	1.033	1.061	1.087	1.062	1.086	1.081	1.068	1.062	1.059	1.063	1.060	1.064	1.061	1.065	1.061	1.062

注：1 1981年から1988年までは消費電力量、1988年以降は想定需要である。
2 1988年以降の電力需要は、1983年から1988年までの需要増加率で増加するものとして想定した。
3 一般需要は、人口増加と電化率より需要想定を行った。

「西サモア・サバイ島電力需要想定」

1987年まではEPCのDATAより
1988年以降は想定値

	1981	1982	1983	1984	1985	1986	1987	1988	1989	1990	1991	1992	1993	1994	1995	1996	1997	1998	1999	2000	2001
一般需要																					
入口	[1986年度国勢調査を基準とする]					44,930	45,379	45,833	46,291	46,754	47,222	47,694	48,171	48,653	49,139	49,631	50,127	50,628	51,135	51,646	52,162
電化率 (%)						70	70	70	70	70	78.9	89.3	90	90	91	91	92	92	92	92	92
電化地域人口						31,451	31,766	32,083	32,404	32,728	37,258	42,591	43,354	43,787	44,717	45,164	46,117	46,578	47,044	47,514	47,989
需要家数	702	739	754	823	1,202	1,440	1,776	2,157	1,800	1,818	2,070	2,366	2,409	2,433	2,484	2,509	2,562	2,588	2,614	2,640	2,666
需要家当たり家族数						22	18	18	18	18	18	18	18	18	18	18	18	18	18	18	18
需要電力量 (MWh)	284	323	294	329	458	610	763	832	729	773	924	1,109	1,186	1,257	1,348	1,430	1,533	1,626	1,724	1,829	1,939
需要家当たり消費電力(kWh)	405	437	390	400	381	424	430	386	405	425	447	469	492	517	543	570	598	628	660	693	727
需要家年間当たり増加率	-	1.080	0.892	1.025	0.953	1.112	1.014	0.898	1.050	1.050	1.050	1.050	1.050	1.050	1.050	1.050	1.050	1.050	1.050	1.050	1.050
年間需要増加率		1.137	0.910	1.119	1.392	1.332	1.251	1.090	0.876	1.061	1.195	1.200	1.069	1.061	1.072	1.061	1.072	1.061	1.061	1.061	1.060
産業需要																					
需要電力量 (MWh)	0	0	0	0	0	0	0	0	0	0	26	32	40	50	61	76	94	116	143	177	219
需要家数	0	0	0	0	0	0	0	0	0	0	2	2	3	3	4	5	6	7	9	10	12
需要家の年間当たり増加率	-	-	-	-	-	-	-	-	-	-	-	1.200	1.200	1.200	1.200	1.200	1.200	1.200	1.200	1.200	1.200
需要家当たり消費電力(kWh)	-	-	-	-	-	-	-	-	-	-	13,140	13,534	13,940	14,358	14,789	15,233	15,650	16,161	16,645	17,145	17,659
需要家当たり年間需要増加率	-	-	-	-	-	-	-	-	-	-	-	1.030	1.030	1.030	1.030	1.030	1.030	1.030	1.030	1.030	1.030
商業需要																					
需要電力量 (MWh)	214	398	457	437	524	638	672	707	735	765	796	828	861	896	932	970	1,009	1,050	1,092	1,136	1,182
需要家数	25	43	56	62	76	93	90	98	99	100	101	102	103	104	105	106	107	108	109	110	112
需要家の年間当たり増加率	-	1.720	1.302	1.107	1.226	1.224	0.968	1.089	1.010	1.010	1.010	1.010	1.010	1.010	1.010	1.010	1.010	1.010	1.010	1.010	1.010
需要家当たり消費電力(kWh)	-	9,256	8,161	7,048	6,895	6,860	7,467	7,214	7,431	7,654	7,883	8,120	8,363	8,614	8,873	9,139	9,413	9,695	9,986	10,286	10,594
需要家当たり年間需要増加率	-	-	0.882	0.864	0.978	0.995	1.088	0.966	1.030	1.030	1.030	1.030	1.030	1.030	1.030	1.030	1.030	1.030	1.030	1.030	1.030
ホテル需要																					
需要電力量 (MWh)	-	9	13	25	41	32	62	54	55	145	166	172	179	186	211	220	229	238	247	279	290
需要家数	-	2	2	4	4	4	4	4	10	10	11	11	11	11	12	12	12	12	12	13	13
需要家当たり消費電力(kWh)	-	4,536	6,271	6,218	10,284	8,048	15,451	13,385	13,921	14,477	15,057	15,659	16,285	16,937	17,614	18,319	19,051	19,813	20,606	21,430	22,287
需要家当たり年間需要増加率	-	-	1.382	0.992	1.654	0.783	1.920	0.866	1.040	1.040	1.040	1.040	1.040	1.040	1.040	1.040	1.040	1.040	1.040	1.040	1.040
宗教需要																					
需要電力量 (MWh)		16	24	111	36	36	52	84	93	103	115	128	142	158	175	195	216	240	267	296	329
需要家数	-	26	33	38	52	66	85	97	98	99	100	101	102	103	104	105	106	107	108	109	110
需要家の年間当たり増加率	-	-	1.269	1.152	1.368	1.269	1.288	1.141	1.010	1.010	1.010	1.010	1.010	1.010	1.010	1.010	1.010	1.010	1.010	1.010	1.010
需要家当たり消費電力(kWh)	-	604	731	2,910	686	539	614	864	951	1,046	1,150	1,265	1,392	1,531	1,684	1,853	2,038	2,242	2,466	2,712	2,984
需要家当たり年間需要増加率	-	-	1.212	3.979	0.236	0.786	1.138	1.408	1.100	1.100	1.100	1.100	1.100	1.100	1.100	1.100	1.100	1.100	1.100	1.100	1.100
学校需要																					
需要電力量 (MWh)		8	10	8	11	17	24	25	26	27	29	30	31	32	33	35	36	38	39	41	42
需要家数	-	109	116	93	88	98	99	100	101	102	103	104	105	106	107	108	109	110	112	113	114
需要家の年間当たり増加率	-	-	1.064	0.802	0.946	1.114	1.010	1.010	1.020	1.020	1.020	1.020	1.020	1.020	1.020	1.020	1.020	1.020	1.020	1.020	1.020
需要家当たり消費電力(kWh)	-	77	84	84	122	168	244	254	261	269	277	285	294	303	312	321	331	341	351	362	372
需要家当たり年間需要増加率	-	-	1.088	0.999	1.453	1.384	1.450	1.038	1.030	1.030	1.030	1.030	1.030	1.030	1.030	1.030	1.030	1.030	1.030	1.030	1.030
道路照明需要																					
需要電力量 (MWh)	-	14	15	15	15	15	12	14	12	12	13	13	14	14	15	15	16	16	17	17	18
年間需要増加率	-	-	1.051	0.967	0.993	1.025	0.796	1.195	1.035	1.035	1.035	1.035	1.035	1.035	1.035	1.035	1.035	1.035	1.035	1.035	1.035
総消費電力量(MWh)	-	769	813	924	1,084	1,347	1,585	1,716	1,650	1,826	2,068	2,313	2,453	2,593	2,777	2,940	3,132	3,323	3,529	3,774	4,019
系統損失(MWh)	-	171	194	175	185	395	372	400	380	365	414	439	454	467	486	500	532	548	582	604	643
損失率(%)	-	22.25	23.87	18.94	17.06	29.32	23.47	23.31	23.00	20.00	20.00	19.00	18.50	18.00	17.50	17.00	17.00	16.50	16.50	16.00	16.00
系統総電力量(MWh)	-	940	1,007	1,099	1,269	1,742	1,957	2,116	2,030	2,192	2,482	2,752	2,907	3,060	3,262	3,440	3,665	3,871	4,112	4,378	4,662
負荷率	-	0.35	0.35	0.35	0.35	0.35	0.35	0.35	0.35	0.37	0.38	0.39	0.40	0.41	0.42	0.43	0.44	0.45	0.45	0.46	0.46
ピーク電力(kW)	-	306	328	358	414	568	638	690	662	676	746	806	830	852	887	913	951	982	1,043	1,087	1,157
年間電力増加率	-	-	1.071	1.092	1.155	1.373	1.123	1.081	0.959	1.080	1.133	1.109	1.056	1.053	1.066	1.054	1.065	1.056	1.062	1.065	1.065

注：1　1981年から1988年までは消費電力量、1988年以降は想定需要である。
　　2　1988年以降の電力需要は、1986年から1988年までの需要増加率で増加するものとして想定した。
　　3　一般需要は、人口増加と電化率より需要想定を行った。

ウポル島電力需要想定

出典：EPC

配電線	村名/大需要家	1986年 人口	1995年 人口	需要家数	1995年 電力需要	1995年 ピーク電力	Tr容量 (kVA)	15 kVA	25 kVA	50 kVA
					1,785 (kWh/需要家)	0.35 (LF)				
線路No.1	Tanugamanono	654	715	65	116,069	38	50	0	0	1
Tanugamanono-Siumu	Papauta	504	551	50	89,448	29	50	0	0	1
	Pr. School		[29751]	1	29,751	10	15	1	0	0
	Vailima	790	864	79	140,205	46	50	0	0	1
	Avele	371	406	37	65,843	21	25	0	1	0
	Church			1	36,422	8	15	1	0	0
	Letava	264	289	26	46,853	15	25	0	1	0
	Vaoala	503	550	50	89,270	29	50	0	0	1
	Tiapapata	112	122	11	19,877	6	15	1	0	0
	Afiamalu East	74	81	7	13,133	4	15	1	0	0
	Trans/Station							0	0	1
	Afiamalu West	40	44	4	7,099	2	15	1	0	0
	Branch line									
	FM Trans/Station							0	0	1
	Telcom Relay Station							0	0	1
	Satelite Earth Station							0	0	1
	Maninoa	320	350	32	56,792	19	25	0	1	0
	Siumu	561	614	56	99,564	32	50	0	0	1
	Shops		[24395]	8	195,160	16	25	0	4	0
	Schools		[29751]	2	59,502	10	15	2	0	0
	Churches		[36422]	6	218,532	12	15	6	0	0
	Siumu-Uta	590	645	59	104,710	34	50	0	0	1
	Saaga	407	445	40	72,232	24	25	0	1	0
	Sub-Total	5,190	5,676	534	1,460,464	356	530	13	8	10

配電線	村名/大需要家	1986年 人口	1995年 人口	需要家数	1995年 電力需要	1995年 ピーク電力	Tr容量 (kVA)	15 kVA	25 kVA	50 kVA
					1,785 (kWh/需要家)	0.35 (LF)				
No.2 Line	Matatufu	475	520	47	84,301	27	50	0	0	1
Lotofaga - Amaile	Lotofaga	916	1,002	91	162,567	53	25	0	2	0
	Vavau	387	423	38	68,683	22	25	0	1	0
	Aufaga	511	559	51	90,690	30	50	0	0	1
	Vaigalu	124	136	12	22,007	7	15	1	0	0
	Lepa	318	348	32	56,437	18	25	0	1	0
	Siupapa	198	217	20	35,140	11	15	1	0	0
	Saleapaga	304	332	30	53,952	18	25	0	1	0
	Satitea	481	526	48	85,366	28	50	0	0	1
	Malaela	123	135	12	21,829	7	15	1	0	0
	Lepue	258	282	26	45,789	15	15	1	0	0
	Mutiatele	252	276	25	44,724	15	15	1	0	0
	Saleaaumua	572	626	57	101,516	33	50	0	0	1
	Utufaalalafa	90	98	9	15,973	5	15	1	0	0
	Samusu	517	565	51	91,755	30	50	0	0	1
	Amaile	260	284	26	46,144	15	25	0	1	0
	Tiavea	584	639	58	103,646	34	50	0	0	1
	Lalomanu	748	818	74	132,752	43	50	0	0	1
	Vailoa	376	411	37	66,731	22	25	0	1	0
	Ulutogia	201	220	20	35,673	12	15	1	0	0
	Shops		[24395]	35	853,825	14	15	20	0	0
	Schools		[29751]	10	297,510	10	15	10	0	0
	Church		[36422]	14	509,908	12	15	14	0	0
	Sub-Total	7,695	8,416	824	3,026,915	481	650	51	7	7

配電線	村名/大需要家	1986年 人口	1995年 人口	需要家数	1995年 電力需要	1995年 ピーク電力	Tr容量 (kVA)	15 kVA	25 kVA	50 kVA
					1,785 (kWh/需要家)	0.35 (LF)				
No.3 Line	Sauano	221	242	22	39,222	13	15	1	0	0
Saluafata - Sauniatu	Falevao	423	463	42	75,072	24	25	0	1	0
	Manunu	177	194	18	31,413	10	15	1	0	0
	Sauniatu	133	145	13	23,604	8	15	1	0	0
	Shops		[24395]	2	48,790	16	25	0	1	0
	Schools		[29751]	2	59,502	19	25	0	1	0
	Church		[36422]	2	72,844	24	25	0	1	0
	Sub-Total	954	1,043	101	350,447	114	145	3	4	0

配電線	村名/大需要家	1986年 人口	1995年 人口	需要家数	1995年 電力需要	1995年 ピーク電力	Tr容量 (kVA)	15 kVA	25 kVA	50 kVA
					1,785 (kWh/需要家)	0.35 (LF)				
No.4 Line	Siusega	729	797	72	129,379	42	50	0	0	1
Siusega - Tanumalala	Tapatapao	117	128	12	20,765	7	15	1	0	0
	Leaupuni	169	185	17	29,993	10	15	1	0	0
	Aleisa East	344	376	34	61,052	20	25	0	1	0
	Aleisa West	610	667	61	108,260	35	50	0	0	1
	Shops		[24395]	4	97,580	16	25	0	2	0
	Schools		[29751]	1	29,751	10	15	1	0	0
	Church		[36422]	3	109,266	12	15	3	0	0
	Sub-Total	1,969	2,153	204	586,046	151	210	6	3	2

配電線	村名/大需要家	1986年 人口	1995年 人口	需要家数	1995年 電力需要	1995年 ピーク電力	Tr容量 (kVA)	15 kVA	25 kVA	50 kVA
					1,785 (kWh/需要家)	0.35 (LF)				
No.5 Line	Salepeua'e	208	227	21	36,915	12	15	1	0	0
Aleisa - Saleimoa	Nonoa	143	156	14	25,379	8	15	1	0	0
	Sub-Total	351	384	35	62,294	20	30	2	0	0

配電線	村名/大需要家	1986年 人口	1995年 人口	需要家数	1995年 電力需要	1995年 ピーク電力	Tr容量 (kVA)	15 kVA	25 kVA	50 kVA
					1,785 (kWh/需要家)	0.35 (LF)				
No.6 Line	Aele	326	357	32	57,857	19	25	0	1	0
Nuu - Faleula	Nuu	257	281	26	45,611	15	15	1	0	0
	Church		[36422]	1	36,422	12	15	1	0	0
	Sub-Total	583	638	59	139,890	46	55	2	1	0

配電線	村名/大需要家	1986年 人口	1995年 人口	需要家数	1995年 電力需要	1995年 ピーク電力	Tr容量 (kVA)	15 kVA	25 kVA	50 kVA
					1,785 (kWh/需要家)	0.35 (LF)				
No.7 Line	Lepale	43	47	4	7,631	2	15	1	0	0
Lepal - Fasitoouta	Church		[36422]	2	72,844	24	25	0	1	0
	Sub-Total	43	47	6	80,475	26	40	1	1	0

配電線	村名/大需要家	1986年 人口	1995年 人口	需要家数	1995年 電力需要	1995年 ピーク電力	Tr容量 (kVA)	15 kVA	25 kVA	50 kVA
					1,785 (kWh/需要家)	0.35 (LF)				
No.8 Line	Afia	163	178	16	28,928	9	15	1	0	0
Satuimalufilufi - Satapuala	Vaipapa	126	138	13	22,362	7	15	1	0	0
	Faleele	26	28	3	4,614	2	15	1	0	0
	Afolau	65	71	6	11,536	4	15	1	0	0
	Sina	150	164	15	26,621	9	15	1	0	0
	Church		[36422]	1	36,422	12	15	1	0	0
	Sub-Total	530	580	54	130,484	43	90	6	0	0

サバイ島電力需要想定

出典：EPC

配電線	村名/大需要家	1986年 人口	1995年 人口	需要家数	1995年 電力需要	1995年 ピーク電力	Tr容量 (kVA)	15 kVA	25 kVA	50 kVA
					1,785 (kWh/需要家)	0.35 (LF)				
Line No.9	Lane	695	760	42	75,378	25	25	0	1	0
Puapia - Samalaeulu	Asaga	243	266	15	26,355	9	15	1	0	0
	Puapua	519	568	32	56,289	18	25	0	1	0
	Patamea	605	662	37	65,617	21	25	0	1	0
	Samalaeulu	828	906	50	89,802	29	50	0	0	1
	Mauga	157	172	10	17,028	6	15	1	0	0
	Shops		[24395]	2	48,790	16	25	0	1	0
	Schools		[29751]	2	59,502	19	25	0	1	0
	Churches		[36422]	3	109,266	36	50	0	0	1
	Sub-Total	3,047	3,332	192	548,027	179	255	2	5	2

配電線	村名/大需要家	1986年 人口	1995年 人口	需要家数	1995年 電力需要	1995年 ピーク電力	Tr容量 (kVA)	15 kVA	25 kVA	50 kVA
					1,785 (kWh/需要家)	0.35 (LF)				
Line No.10	Fagaee	248	271	15	26,897	9	15	1	0	0
Sasina - Matavai	Sasina	614	672	37	66,593	22	25	0	1	0
	Letui	273	299	17	29,609	10	15	1	0	0
	Aopo	389	425	24	42,190	14	15	1	0	0
	Shops		[24395]	6	146,370	24	25	0	2	0
	Schools		[29751]	4	119,004	10	15	4	0	0
	Churches		[36422]	4	145,688	12	15	4	0	0
	Sub-Total	1,524	1,667	107	576,351	99	125	11	3	0

配電線	村名/大需要家	1986年 人口	1995年 人口	需要家数	1995年 電力需要	1995年 ピーク電力	Tr容量 (kVA)	15 kVA	25 kVA	50 kVA
					1,785 (kWh/需要家)	0.35 (LF)				
Line No.11	Falcalupo-Uta	718	785	44	77,872	25	50	0	0	1
Tafutafoe	Vaetupua	386	422	23	41,864	14	15	1	0	0
	Avata	170	186	10	18,438	6	15	1	0	0
	Tufutafoe	354	387	22	38,394	13	15	1	0	0
	Neiafu-Tai	506	553	31	54,879	18	25	0	1	0
	Neiafu-Uta	603	659	37	65,400	21	25	0	1	0
	Falelima	555	607	34	60,194	20	25	0	1	0
	Shops		[24395]	2	48,790	8	15	1	0	0
	Schools		[29751]	3	89,253	10	15	3	0	0
	Churches		[36422]	4	145,688	12	15	4	0	0
	Sub-Total	3,292	3,600	209	640,772	146	215	11	3	1

配電線	村名/大需要家	1986年 人口	1995年 人口	需要家数	1995年 電力需要	1995年 ピーク電力	Tr容量 (kVA)	15 kVA	25 kVA	50 kVA
					1,785 (kWh/需要家)	0.35 (LF)				
Line No.12	Tafua-Tai	357	390	22	38,719	13	15	1	0	0
Tafuatai - Tafuauta	Tafua-Uta	185	202	11	20,065	7	15	1	0	0
	Shops		[24395]	1	24,395	8	15	1	0	0
	Schools		[29751]	1	29,751	10	15	1	0	0
	Churches		[36422]	1	36,422	12	15	1	0	0
	Sub-Total	542	593	36	149,352	49	75	5	0	0

1. STRAIGHT LINE POLES

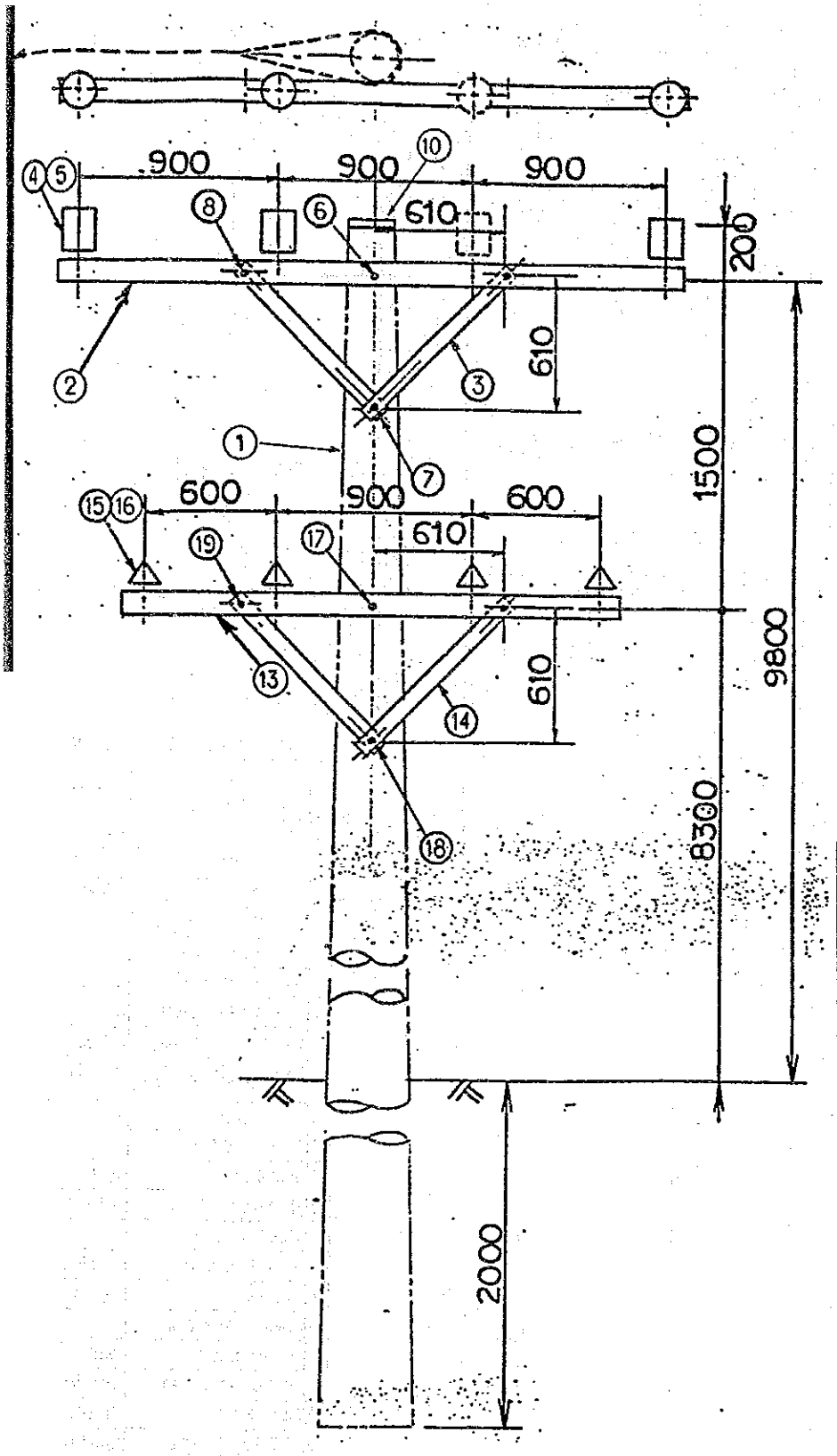

1. STRAIGHT LINE POLES

	DESCRIPTION	SPEC.	Q'TY
	[FOR 22KV LINE]		
1	POLES	12M	1
2	STEEL CROSSARM	75x75x3.2x2900	1
3	ARM BRACE	863x40x6	2
4	22KV PIN INSULATORS		3
5	22KV INSULATOR PIN		3
6	BOLT FOR ARM/POLE WITH 1-CURVED WASHER	M16x340	1
7	BOLT FOR BRACE/POLE WITH 1-CURVED WASHER	M16x280	1
8	BOLT FOR ARM/BRACE	M16x120	2
9	COACH SCREW	12x100	2
10	ALUMI POLE CAP		1
11	STEP BOLT	16x260	2
12	PREFORMED TOP TIE		3
	[FOR L.V.LINE]		
13	STEEL CROSSARM	75x75x3.2x2300	1
14	ARM BRACE	863x40x6	2
15	L/V PIN INSULATOR		4
16	L/V INSULATOR PIN		4
17	BOLT FOR ARM/POLE WITH 1-CURVED WASHER	M16x360	1
18	BOLT FOR BRACE/POLE WITH 1-CURVED WASHER	M16x300	1
19	BOLT FOR ARM/BRACE	M16x120	2
20	AL. BIND WIRE	3.2mm INSULATED	12M
* 21	POLES	9M	1

2. LIGHT ANGLE POLE (DOUBLE PIN)

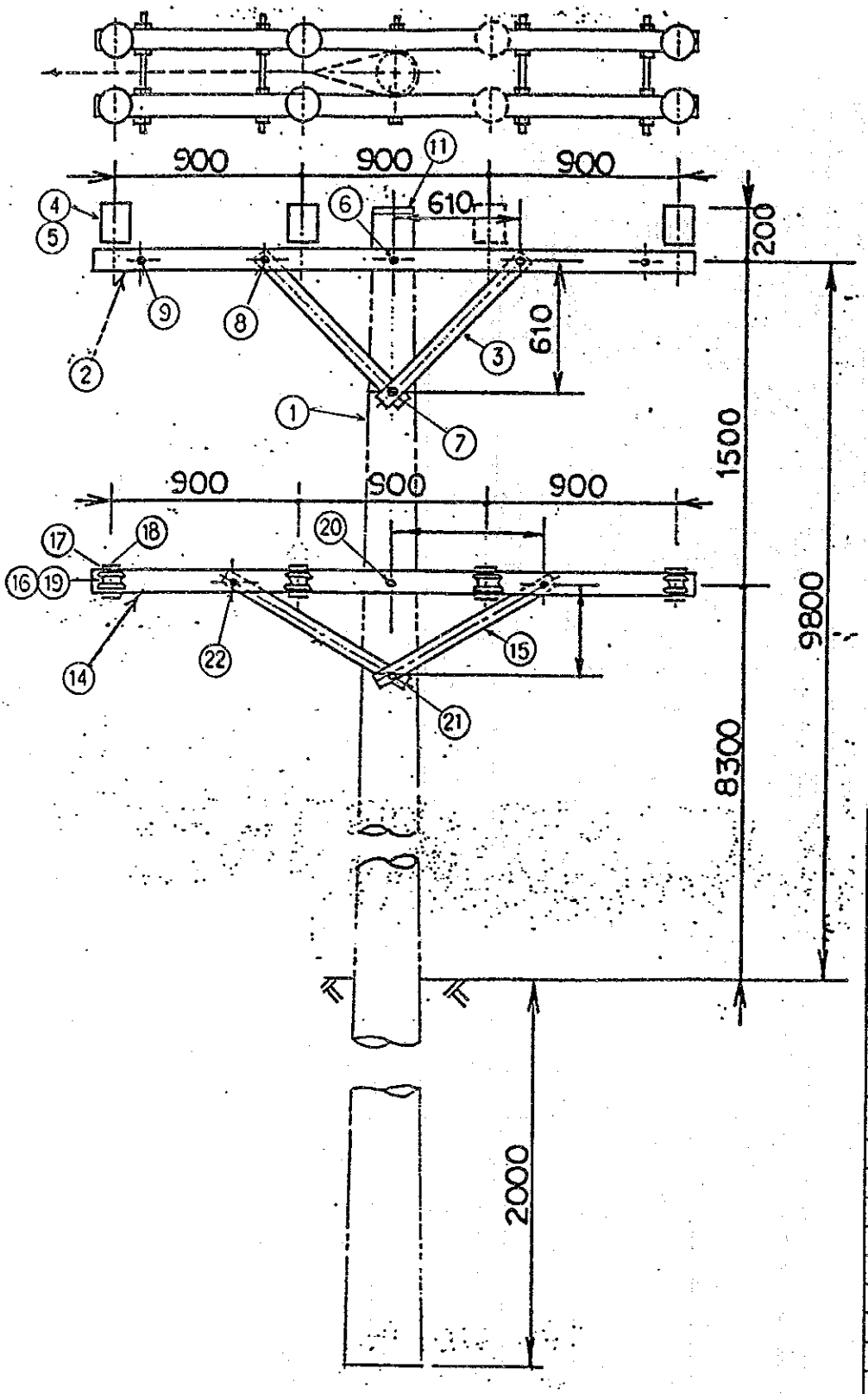

2. LIGHT ANGLE POLE (DOUBLE PIN)

	DESCRIPTION	SPEC.
	[FOR 22KV LINE]	
1	POLES	12M
2	STEEL CROSSARM	75x75x3.2x2900
3	ARM BRACE	863x40x6
4	22KV PIN INSULATORS	
5	22KV INSULATOR PIN	
6	BOLT FOR ARM/POLE	M16x420
7	BOLT FOR BRACE/POLE	M16x300
8	BOLT FOR ARM/BRACE	M16x120
9	DOUBLE ARMING BOLT WITH 4-NUT,4-SQ.WASHER	M16x440
10	COACH SCREW	12x100
11	ALUMI POLE CAP	
12	STEP BOLT	16x260
13	PREFORMED TOP TIE	FOR DOUBLE PIN
	[FOR L.V.LINE]	
14	STEEL CROSSARM	75x75x3.2x2900
15	ARM BRACE	863x40x6
16	SHACKLE INSULATOR	
17	SHACKLE STRAP	PAIR
18	SHACKLE STRAP BOLT	M16x150
19	SHACKLE BOLT	M16x120
20	BOLT FOR ARM/POLE WITH 1-CURVED WASHER	M16x360
21	BOLT FOR BRACE/POLE WITH 1-CURVED WASHER	M16x300
22	BOLT FOR ARM/BRACE	M16x120
23	AL. BIND WIRE	3.2mm INSULATED
* 24	POLES	9M

3. ANGLE LINE POLE (SINGLE ARM)

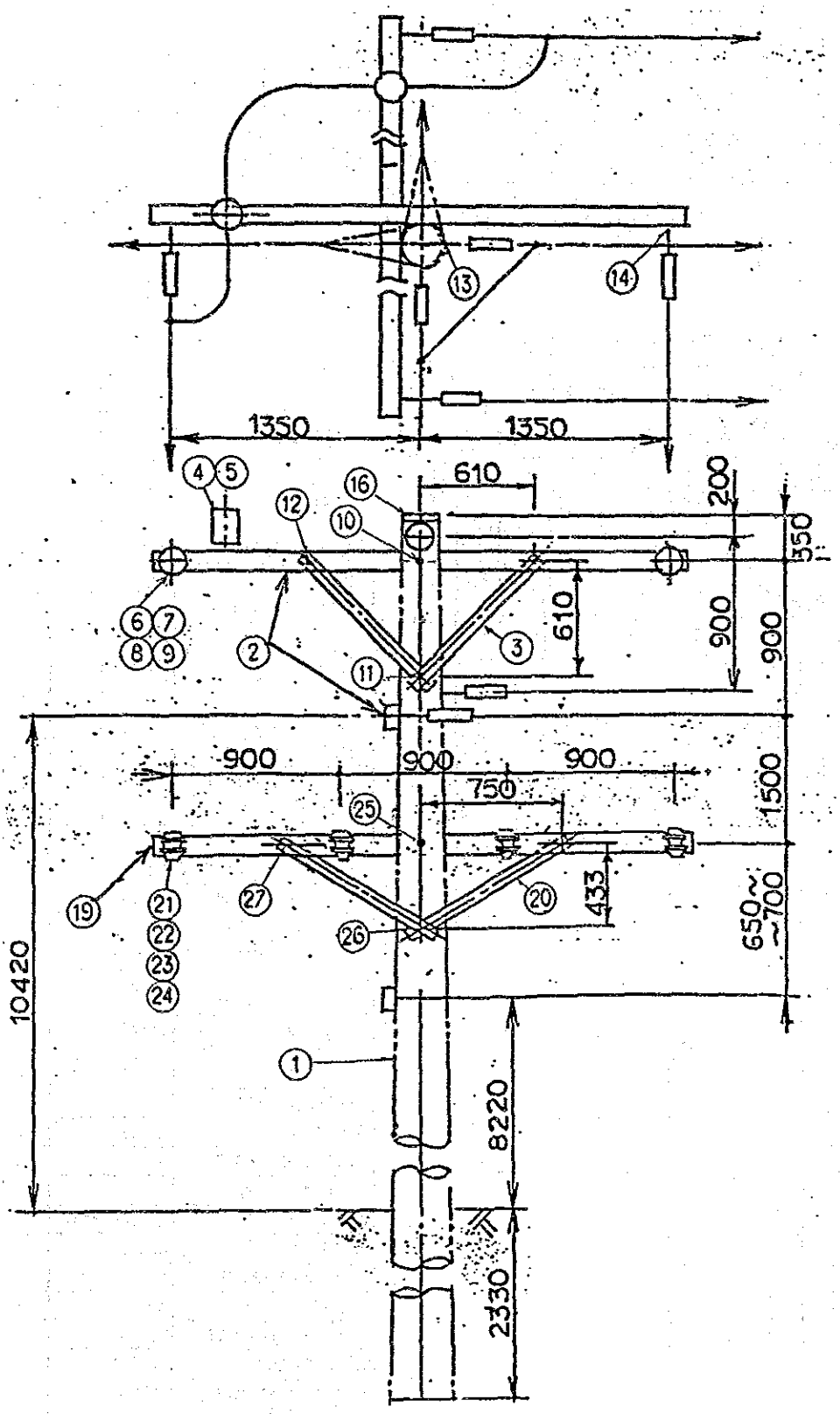

3. ANGLE LINE POLE (SINGLE ARM)

	DESCRIPTION	SPEC.	Q'TY
	[FOR 22KV LINE]		
1	POLES	14M	1
2	STEEL CROSSARM	75x75x3.2x2900	2
3	ARM BRACE	863x40x6	4
4	22KV PIN INSULATORS		2
5	22KV INSULATOR PIN		2
6	22KV DISC INSULATOR		12
7	BALL HOOK		6
8	SOCKET THIMBLE		6
9	PREFORMED DEADEND GRIP		6
10	BOLT FOR ARM/POLE WITH 1-CURVED WASHER	M16x340	2
11	BOLT FOR BRACE/POLE WITH 1-CURVED WASHER	M16x280	2
12	BOLT FOR ARM/BRACE	M16x120	4
13	EYE BOLT WITH 1-CURVED WASHER	M20x300	2
14	EYE BOLT WITH 1-SQUARE WASHER	M20x120	4
15	COACH SCREW	12x100	2
16	ALUMI POLE CAP		1
17	STEP BOLT	16x260	2
18	PREFORMED TOP TIE		2
	[FOR L.V.LINE]		
19	STEEL CROSSARM	75x75x3.2x2900	2
20	ARM BRACE	863x40x6	4
21	SHACKLE INSULATOR		8
22	SHACKLE STRAP	PAIR	8
23	SHACKLE STRAP BOLT	M16x150	8
24	SHACKLE BOLT	M16x120	8
25	BOLT FOR ARM/POLE WITH 1-CURVED WASHER	M16x360	2
26	BOLT FOR BRACE/POLE WITH 1-CURVED WASHER	M16x300	2
27	BOLT FOR ARM/BRACE	M16x120	4
28	AL. BIND WIRE	3.2mm INSULATED	24M
* 29	POLES	9M	1

4. ANGLE LINE POLE (DOUBLE ARM)

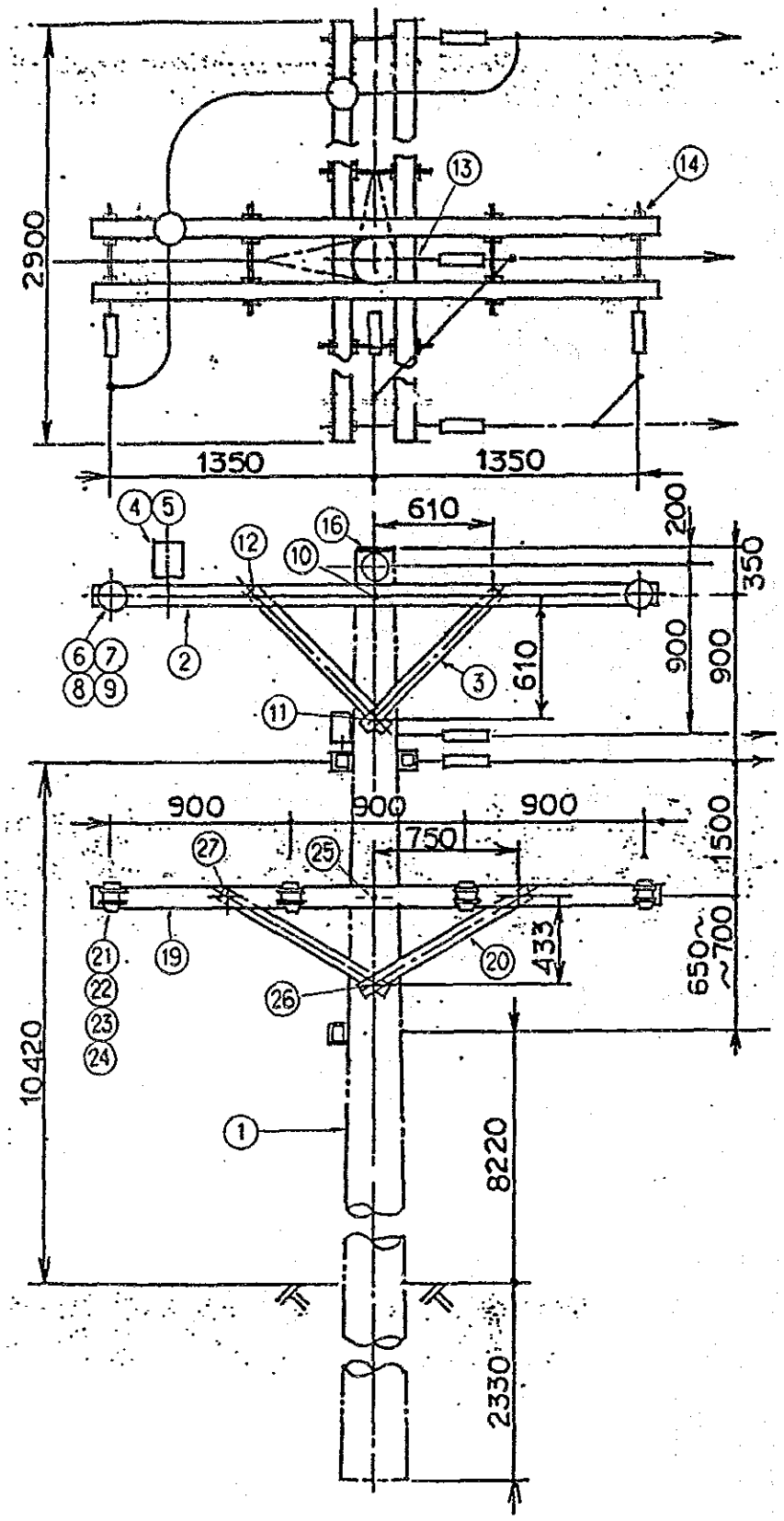

4. ANGLE LINE POLE (DOUBLE ARM)

	DESCRIPTION	SPEC.	Q'TY
	[FOR 22KV LINE]		
1	POLES	14M	1
2	STEEL CROSSARM	75x75x3.2x2900	4
3	ARM BRACE	863x40x6	8
4	22KV PIN INSULATORS		2
5	22KV INSULATOR PIN		2
6	22KV DISC INSULATOR		12
7	BALL HOOK		6
8	SOCKET THIMBLE		6
9	PREFORMED DEADEND GRIP		6
10	BOLT FOR ARM/POLE	M16x420	2
11	BOLT FOR BRACE/POLE	M16x300	2
12	BOLT FOR ARM/BRACE	M16x120	8
13	EYE BOLT WITH 1-CURVED WASHER	M20x300	2
14	DOUBLE ARMING EYE BOLT WITH 4-NUT, 4-SQ.WASHER	M20x440	4
15	COACH SCREW	12x100	4
16	ALUMI POLE CAP		1
17	STEP BOLT	16x260	4
18	PREFORMED TOP TIE		2
	[FOR L.V.LINE]		
19	STEEL CROSSARM	75x75x3.2x2900	2
20	ARM BRACE	863x40x6	4
21	SHACKLE INSULATOR		8
22	SHACKLE STRAP	PAIR	8
23	SHACKLE STRAP BOLT	M16x150	8
24	SHACKLE BOLT	M16x120	8
25	BOLT FOR ARM/POLE WITH 1-CURVED WASHER	M16x360	2
26	BOLT FOR BRACE/POLE WITH 1-CURVED WASHER	M16x300	2
27	BOLT FOR ARM/BRACE	M16x120	4
28	AL. BIND WIRE	3.2mm INSULATED	24M
* 29	POLES	9M	1

5. ANGLE LINE POLES STRAIN (SINGLE ARM)

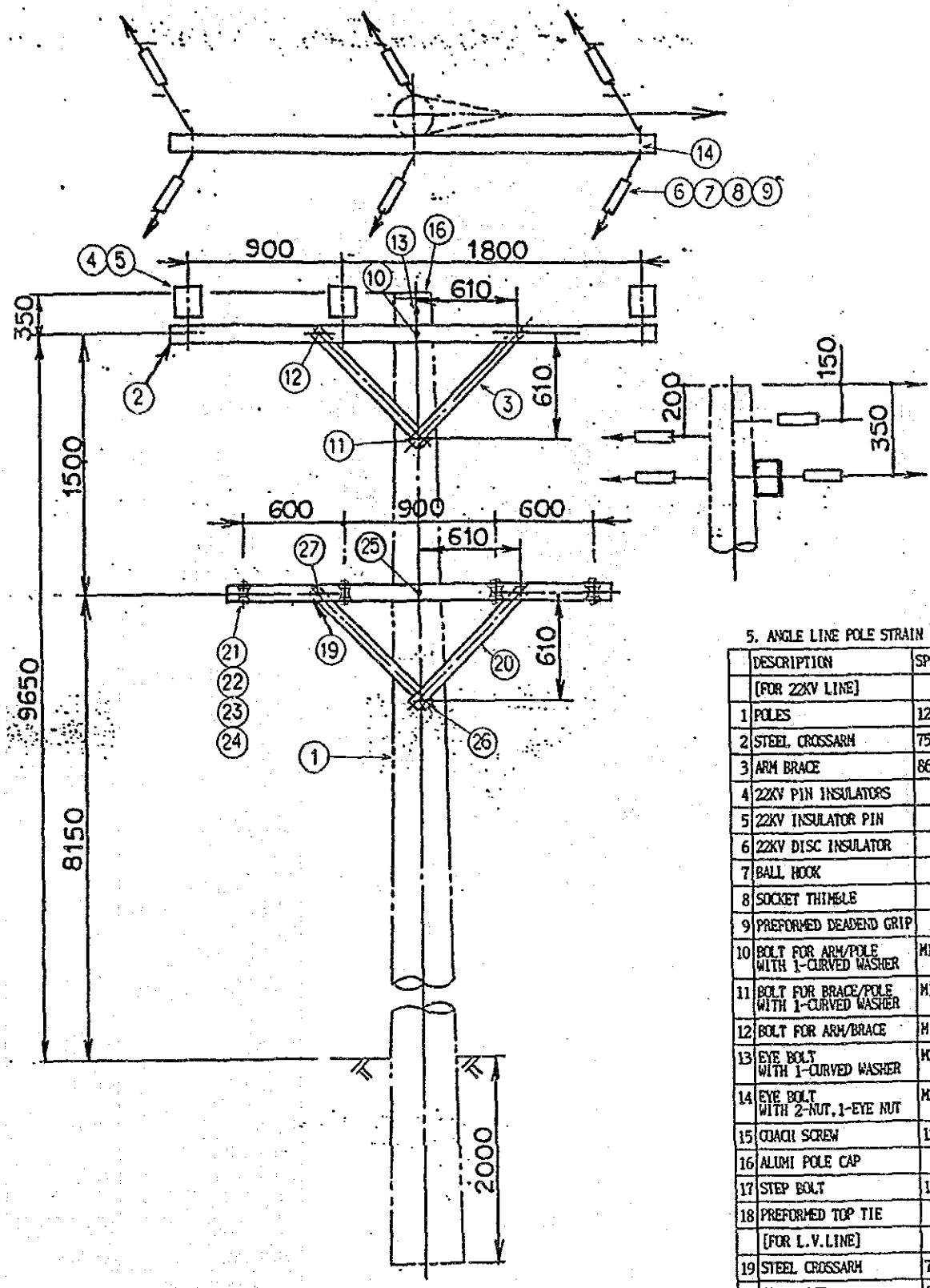

5. ANGLE LINE POLE STRAIN (SINGLE ARM)

	DESCRIPTION	SPEC.	Q'TY
	[FOR 22KV LINE]		
1	POLES	12M	1
2	STEEL CROSSARM	75x75x3.2x2900	1
3	ARM BRACE	863x40x6	2
4	22KV PIN INSULATORS		3
5	22KV INSULATOR PIN		3
6	22KV DISC INSULATOR		12
7	BALL HOOK		6
8	SOCKET THIMBLE		6
9	PREFORMED DEADEND GRIP		6
10	BOLT FOR ARM/POLE WITH 1-CURVED WASHER	M16x340	1
11	BOLT FOR BRACE/POLE WITH 1-CURVED WASHER	M16x280	1
12	BOLT FOR ARM/BRACE	M16x120	2
13	EYE BOLT WITH 1-CURVED WASHER	M20x300	2
14	EYE BOLT WITH 2-NUT,1-EYE NUT	M20x140	2
15	COACH SCREW	12x100	2
16	ALUMI POLE CAP		1
17	STEP BOLT	16x260	2
18	PREFORMED TOP TIE		3
	[FOR L.V.LINE]		
19	STEEL CROSSARM	75x75x3.2x2300	1
20	ARM BRACE	863x40x6	2
21	SHACKLE INSULATOR		8
22	SHACKLE STRAP	PAIR	8
23	SHACKLE STRAP BOLT	M16x150	4
24	SHACKLE BOLT	M16x120	8
25	BOLT FOR ARM/POLE WITH 1-CURVED WASHER	M16x360	1
26	BOLT FOR BRACE/POLE WITH 1-CURVED WASHER	M16x300	1
27	BOLT FOR ARM/BRACE	M16x120	2
28	AL. BIND WIRE	3.2mm INSULATED	24M
* 29	POLES	9M	1

6. TERMINAL POLE (SINGLE ARM)

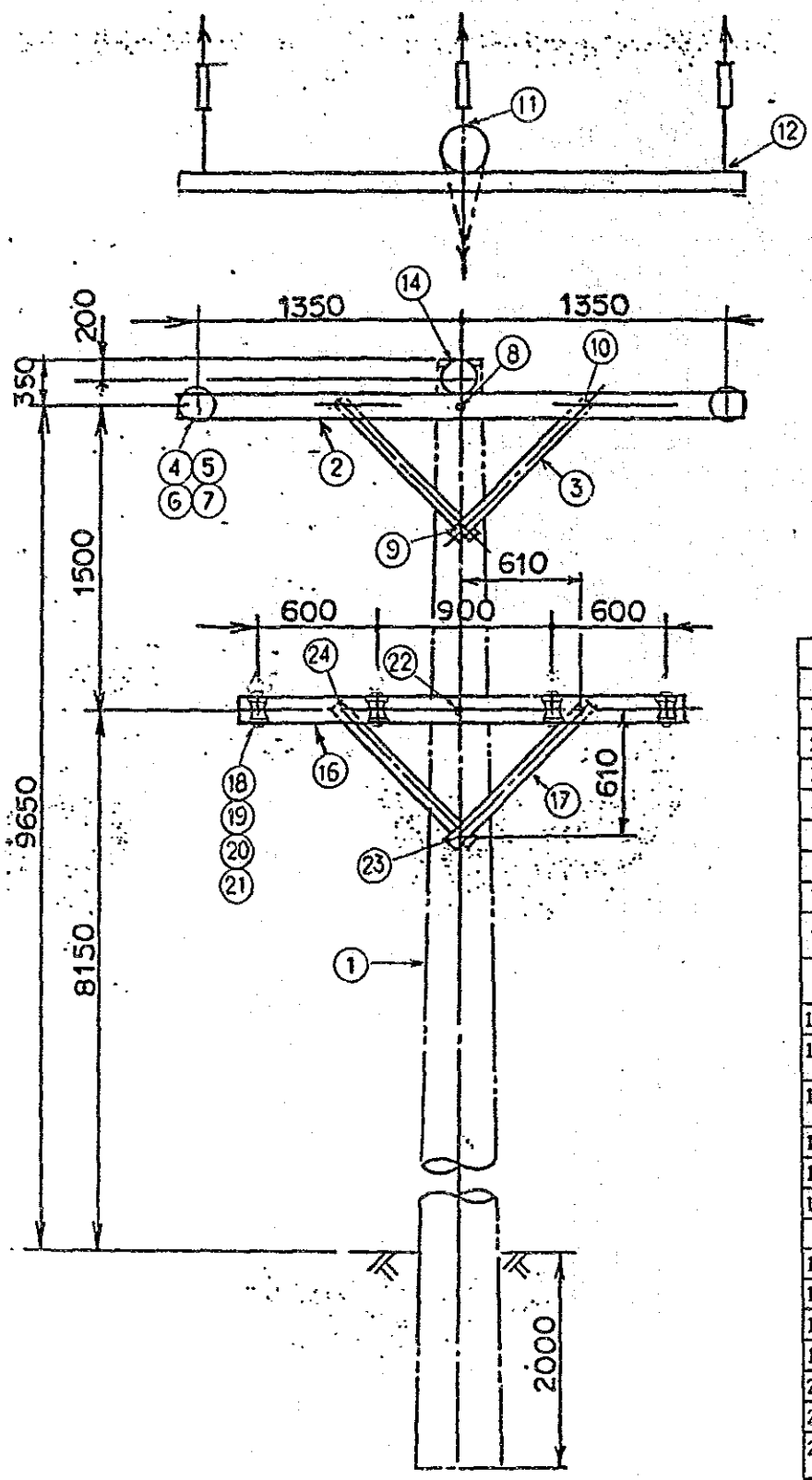

6. TERMINAL POLE (SINGLE ARM)

	DESCRIPTION	SPEC.	Q'TY
	[FOR 22KV LINE]		
1	POLES	12M	1
2	STEEL CROSSARM	75x75x3.2x2900	1
3	ARM BRACE	863x40x6	2
4	22KV DISC INSULATOR		6
5	BALL HOOK		3
6	SOCKET THIMBLE		3
7	PREFORMED DEADEND GRIP		3
8	BOLT FOR ARM/POLE WITH 1-CURVED WASHER	M16x340	1
9	BOLT FOR BRACE/POLE WITH 1-CURVED WASHER	M16x280	1
10	BOLT FOR ARM/BRACE	M16x120	2
11	EYE BOLT WITH 1-CURVED WASHER	M20x300	1
12	EYE BOLT WITH 2-NUT, 1-SQ. WASHER	M20x140	2
13	COACH SCREW	12x100	2
14	ALUMI POLE CAP		1
15	STEP BOLT	16x260	2
	[FOR L.V. LINE]		
16	STEEL CROSSARM	75x75x3.2x2300	1
17	ARM BRACE	863x40x6	2
18	SHACKLE INSULATOR		4
19	SHACKLE STRAP	PAIR	4
20	SHACKLE STRAP BOLT	M16x150	4
21	SHACKLE BOLT	M16x120	4
22	BOLT FOR ARM/POLE WITH 1-CURVED WASHER	M16x360	1
23	BOLT FOR BRACE/POLE WITH 1-CURVED WASHER	M16x300	1
24	BOLT FOR ARM/BRACE	M16x120	2
25	AL. BIND WIRE	3.2mm INSULATED	12M
* 26	POLES	9M	1

7. TERMINAL POLE (DOUBLE ARM)

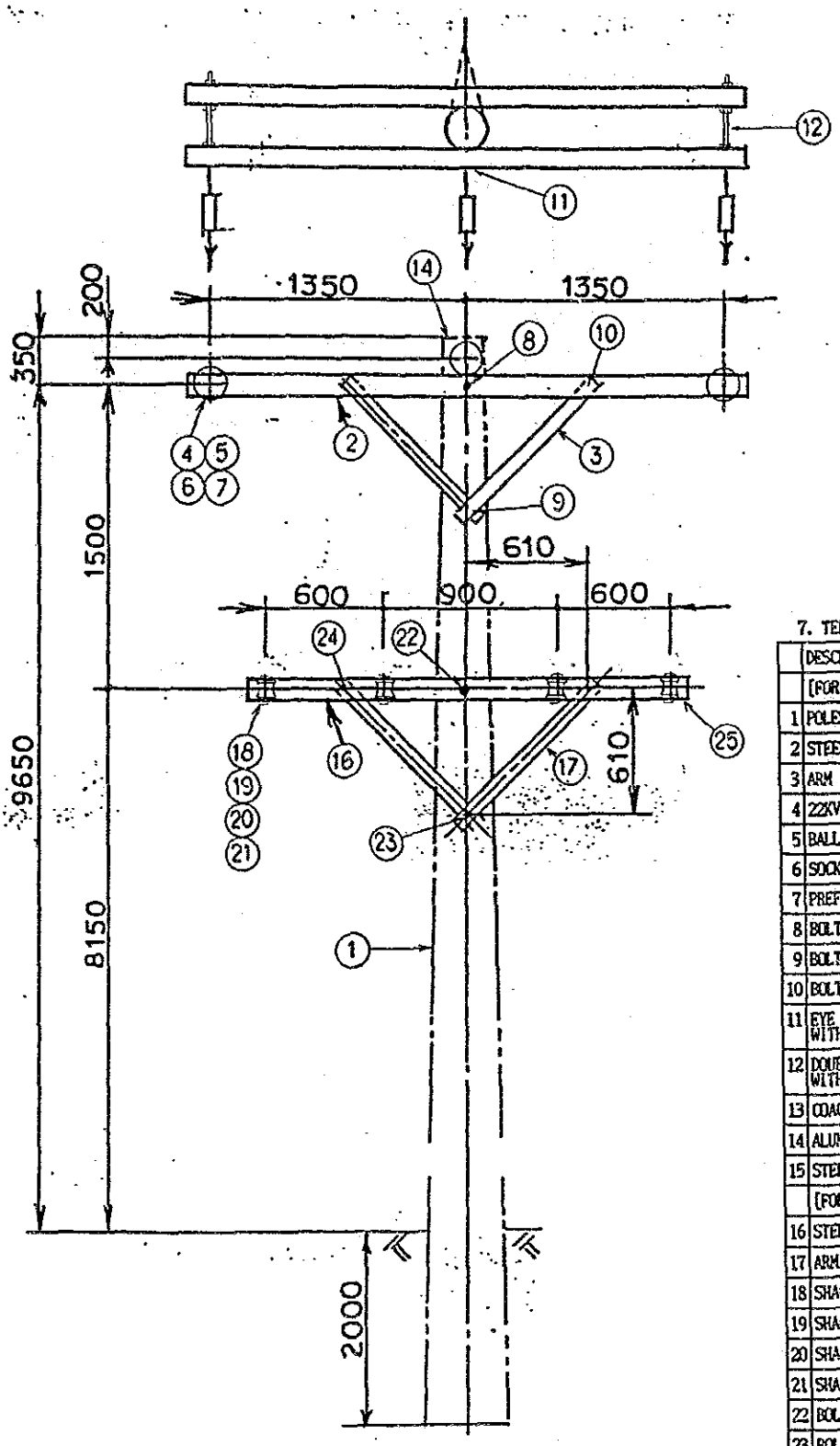

7. TERMINAL POLE (DOUBLE ARM)

	DESCRIPTION	SPEC.	Q'TY
	[FOR 22KV LINE]		
1	POLES	12M	1
2	STEEL CROSSARM	75x75x3.2x2900	2
3	ARM BRACE	863x40x6	4
4	22KV DISC INSULATOR		6
5	BALL HOOK		3
6	SOCKET THIMBLE		3
7	PREFORMED DEADEND GRIP		3
8	BOLT FOR ARM/POLE	M16x420	1
9	BOLT FOR BRACE/POLE	M16x300	1
10	BOLT FOR ARM/BRACE	M16x120	4
11	EYE BOLT WITH 1-CURVED WASHER	M20x300	1
12	DOUBLE ARMING EYE BOLT WITH 4-NUT,4-SQ.WASHER	M20x440	2
13	COACH SCREW	12x100	2
14	ALUMI POLE CAP		1
15	STEP BOLT	16x260	2
	[FOR L.V.LINE]		
16	STEEL CROSSARM	75x75x3.2x2300	2
17	ARM BRACE	863x40x6	4
18	SHACKLE INSULATOR		4
19	SHACKLE STRAP	PAIR	4
20	SHACKLE STRAP BOLT	M16x150	4
21	SHACKLE BOLT	M16x120	4
22	BOLT FOR ARM/POLE	M16x440	1
23	BOLT FOR BRACE/POLE	M16x320	1
24	BOLT FOR ARM/BRACE	M16x120	4
25	DOUBLE ARMING BOLT WITH 4-NUT,4-SQ.WASHER	M16x460	2
26	AL. BIND WIRE	3.2mm INSULATED	12M
* 27	POLES	9M	1

8. TRANSFORMER POLE

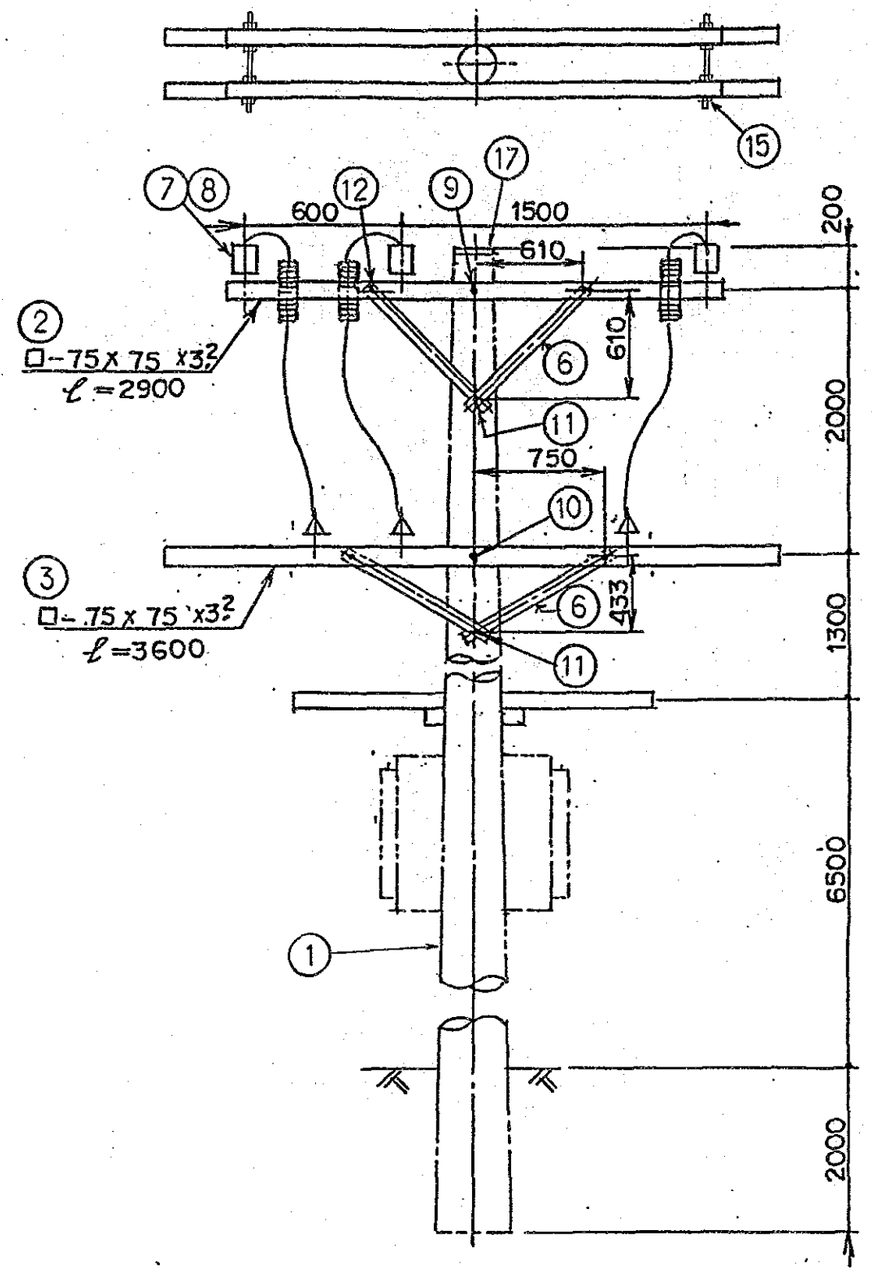

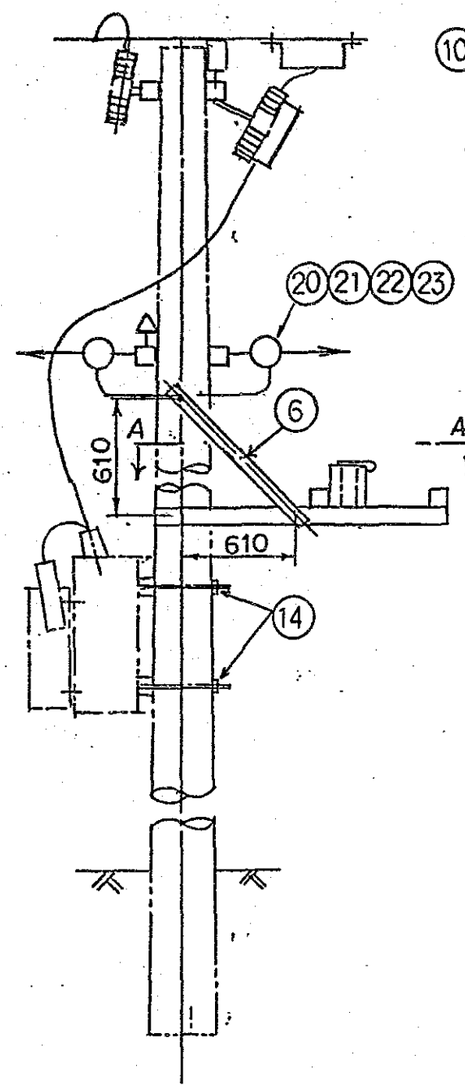

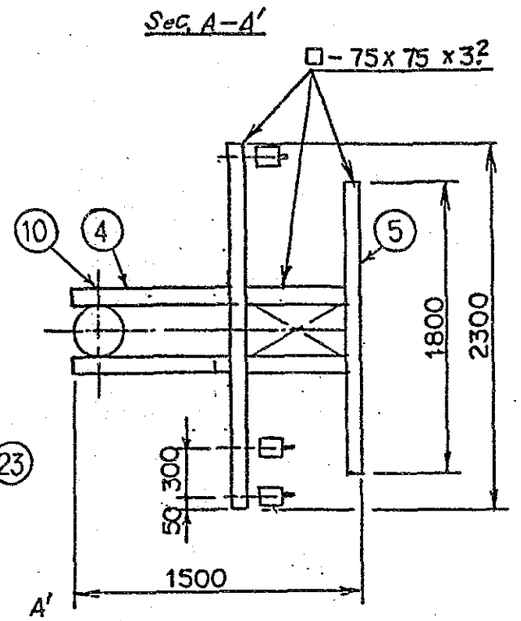

8. TRANSFORMER POLE

	DESCRIPTION	SPEC.	Q'TY
	[FOR 22KV LINE]		
1	POLES	12M	1
2	STEEL CROSSARM	75x75x3.2x2900	2
3	STEEL CROSSARM	75x75x3.2x3600	2
4	STEEL CROSSARM	75x75x3.2x1500	2
5	STEEL CROSSARM	75x75x3.2x1800	2
6	ARM BRACE	863x40x6	10
7	22KV PIN INSULATOR		6
8	22KV INSULATOR PIN		6
9	BOLT FOR ARM/POLE	M16x420	1
10	BOLT FOR ARM/POLE	M16x440	2
11	BOLT FOR BRACE/POLE	M16x320	3
12	BOLT FOR ARM/BRACE	M16x120	10
13	BOLT FOR ARM/ARM	M16x200	4
14	TRANSFORMER BRACKET WITH 2-THROUGH BOLT, 2-CURVED WASHER		1
15	DOUBLE ARMING BOLT WITH 4-NUT,4-SQ.WASHER	M16x440	4
16	COACH SCREW	12x100	2
17	ALUMI POLE CAP		1
18	STEP BOLT	16x260	2
19	PREFORMED TOP TIE		3
	[FOR L.V.LINE]		
20	SHACKLE INSULATOR		8
21	SHACKLE STRAP	PAIR	8
22	SHACKLE STRAP BOLT	M16x150	8
23	SHACKLE BOLT	M16x120	8
24	AL. BIND WIRE	3.2mm INSULATED	24M
25	EARTHING WIRE COVER		2

9. STAY ASSEMBLY

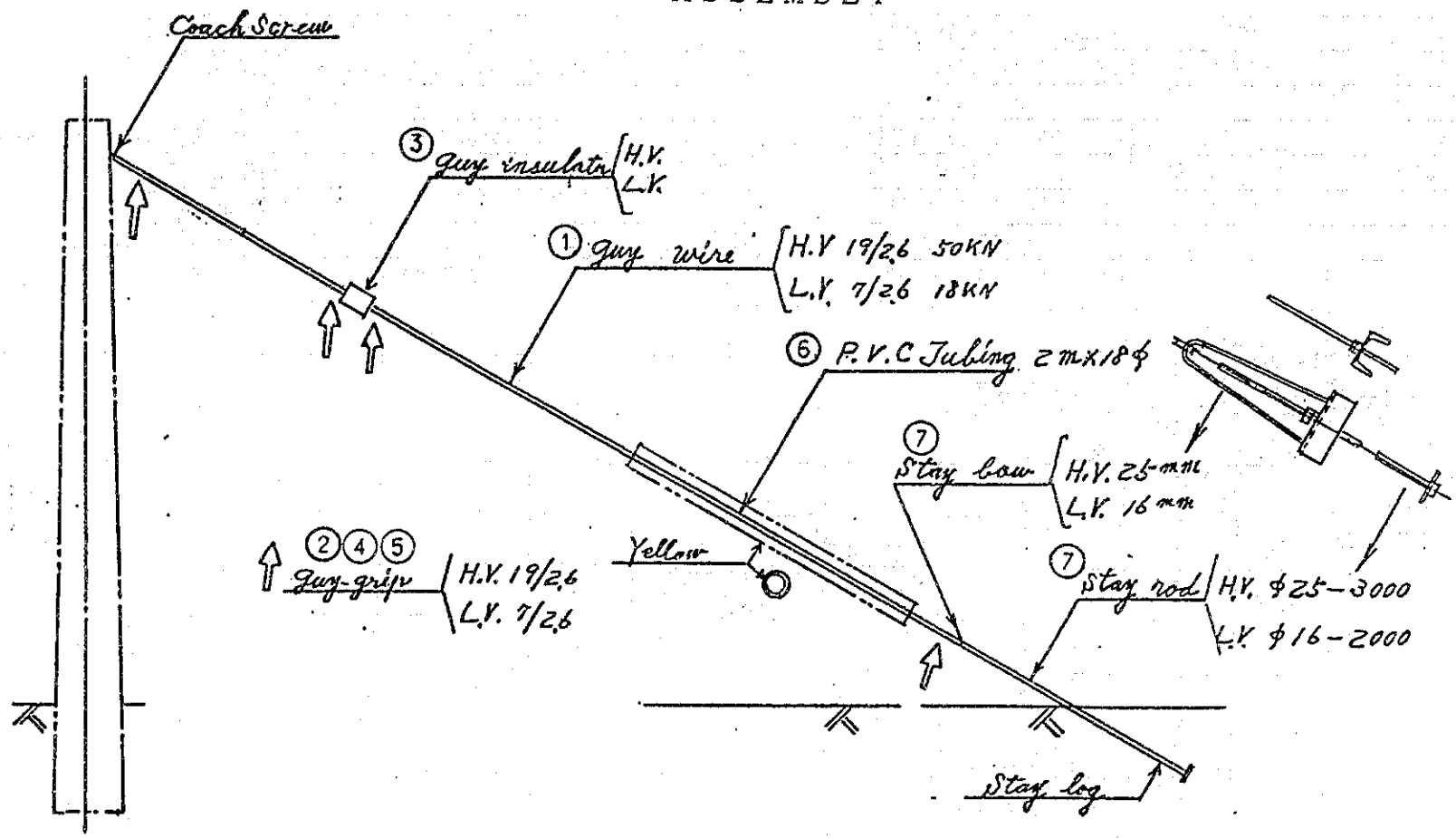

9-1. STAY ASSEMBLY(22KV)

	DESCRIPTION	SPEC.	Q'TY
	[FOR 22KV LINE]		
1	GUY WIRE	19/2.6	20M
2	GUY GRIP FOR WOOD POLE	FOR 19/2.6	1
3	GUY INSULATOR		1
4	GUY GRIP FOR INSULATOR	FOR 19/2.6	2
5	GUY GRIP FOR THIMBLE	FOR 19/2.6	1
6	PVC TUBE(YELLOW)	18x2500mm	1
7	STAY ROD,BOW TYPE	25x3000mm	1

9-2.STAY ASSEMBLY(L.V)

	DESCRIPTION	SPEC.	Q'TY
	[FOR L.V LINE]		
1	GUY WIRE	7/2.6	20M
2	GUY GRIP FOR WOOD POLE	FOR 7/2.6	1
3	GUY INSULATOR		1
4	GUY GRIP FOR INSULATOR	FOR 7/2.6	2
5	GUY GRIP FOR THIMBLE	FOR 7/2.6	1
6	PVC TUBE(YELLOW)	18x2500mm	1
7	STAY ROD,BOW TYPE	16x2200mm	1

10. FLYING STAY ASSEMBLY

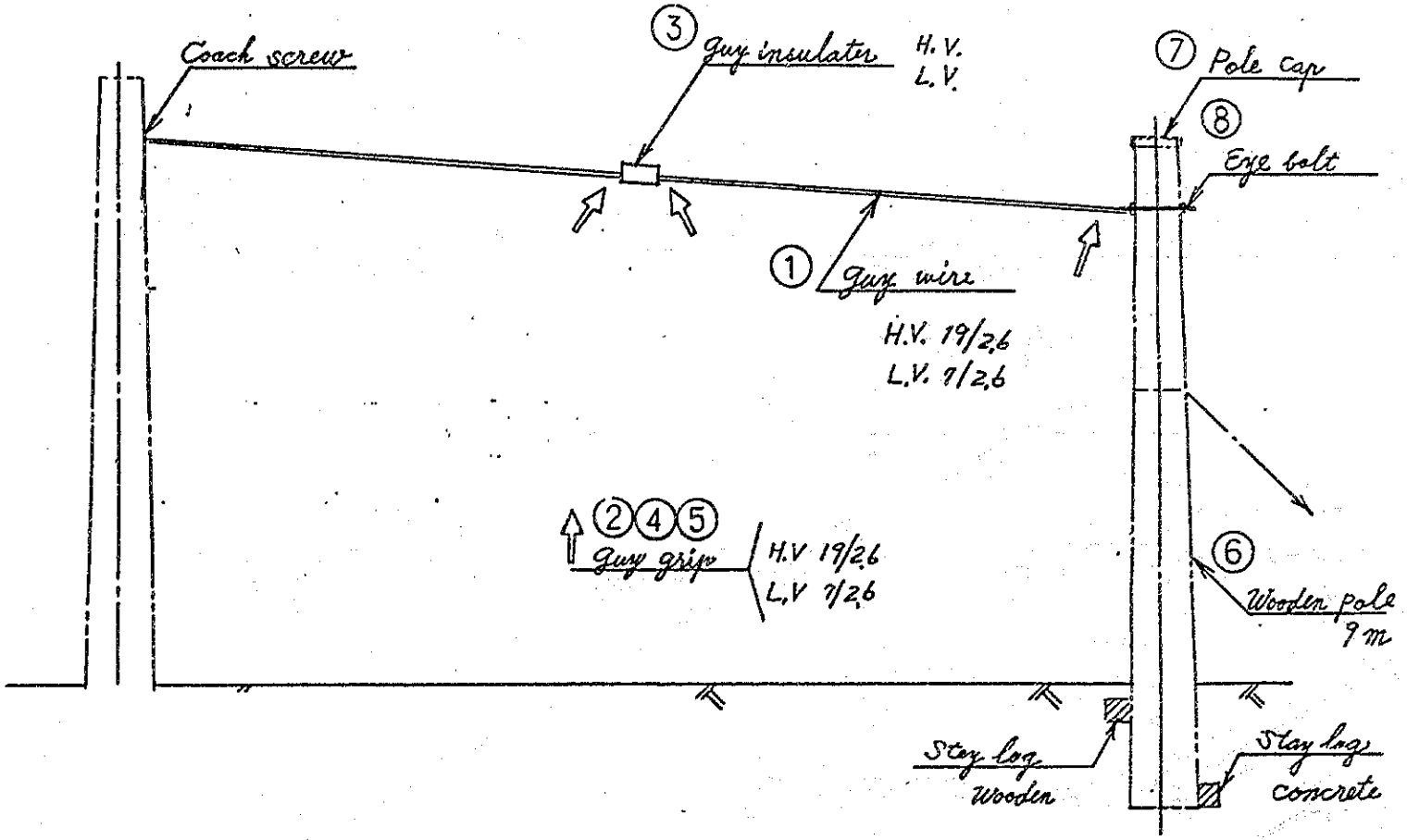

10-1. FLYING STAY ASSEMBLY(22KV)

	DESCRIPTION	SPEC.	Q'TY
	[FOR 22KV LINE]		
1	GUY WIRE	19/2.6	20M
2	GUY GRIP FOR WOOD POLE	FOR 19/2.6	1
3	GUY INSULATOR		1
4	GUY GRIP FOR INSULATOR	FOR 19/2.6	2
5	GUY GRIP FOR THIMBLE	FOR 19/2.6	1
6	POLES	9M	1
7	ALUMI POLE CAP		1

10-2. FLYING STAY ASSEMBLY(L.V)

	DESCRIPTION	SPEC.	Q'TY
	[FOR L.V LINE]		
1	GUY WIRE	7/2.6	20M
2	GUY GRIP FOR WOOD POLE	FOR 7/2.6	1
3	GUY INSULATOR		1
4	GUY GRIP FOR INSULATOR	FOR 7/2.6	2
5	GUY GRIP FOR THIMBLE	FOR 7/2.6	1
6	POLES	9M	1
7	ALUMI POLE CAP		1

西サモア地方電化計画建設工程表

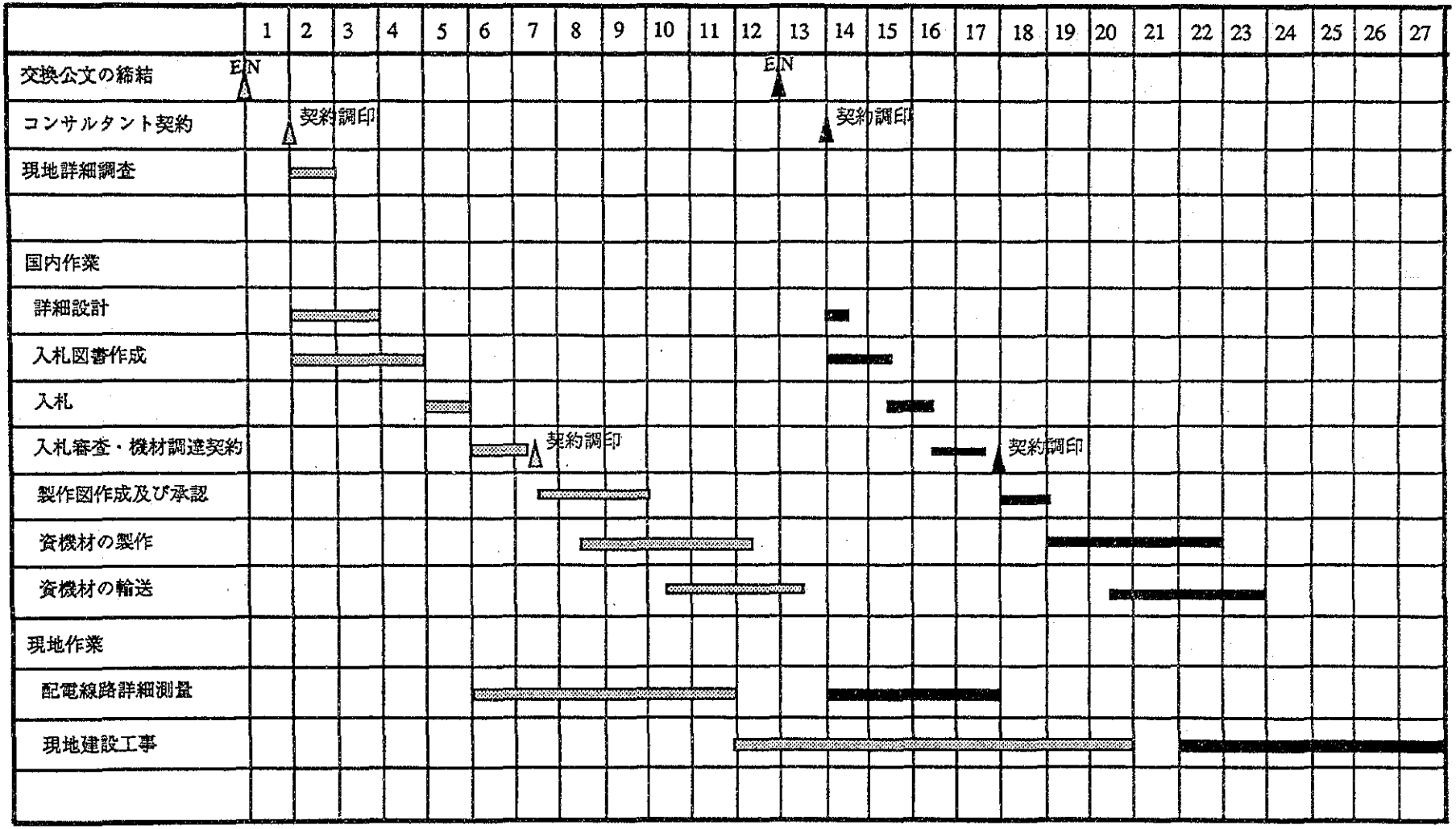

(注) 第一期　第二期

EPC現有建設機械及び工具類

	摘　　要	数　量	購入時期
1.	ピックアップ	4	1978 &1984
2.	トラック（ホイスト付）	4	1978 & 1982
3.	トラック（フラットデッキ）	4	1978 & 1983
4.	トレーラー	2	1978 & 1982
5.	コンプレッサー	3	1978 & 1983
6.	配電工事用ハシゴ	1式	
7.	ポータブル削岩機	1	
8.	テンショナー	2	

平成２年２月８日

株式会社 東 京 銀 行 殿

日 本 工 営 株 式 会 社
第二事業本部
事業本部長
昭

外国通貨交換レート確認

平成１年度６月より１１月までの日本国、オーストラリア、ニュージーランド及び西サモアの各国別並に各月別対米国ドル通貨交換レート表を別添のとうり作成いたしましたので、調査の上、ご確認くださるようお願い申し上げます。

以 上

確 認 書

日本工営株式会社 殿

平成１年度６月より１１月までの日本国、オーストラリア、ニュージラン及び西サモアの各国別並びに各月別対米国ドル交換レートは、別表と相違ないことを確認します。

以 上

平成２年２月 14 日

THE BANK OF TOKYO, LTD.
CORPORATE BANKING DIV. NO.1

MEYA Assistant Manager

外国通貨交換レート表（１９８９年）

国　名	オーストラリア		日　本		ニュージーランド		西サモア
通貨単位及び略号	オーストラリアドル $A		円 ¥		ニュージーランドドル $NZ		ターラ WS$
	S	B	S	B	S	B	
	($A1につきUS$)				($NZ1につきUS$)		
6月	0.7481	0.7521	145.30	143.30	0.5645	0.5570	2.3277
7月	0.7446	0.7486	140.00	138.00	0.5747	0.5876	2.3015
8月	0.7611	0.7651	145.30	143.30	0.5847	0.5973	2.3288
9月	0.7701	0.7741	141.20	139.20	0.5839	0.5962	2.3015
１０月	0.7826#	----	143.35	141.35	0.5885#	----	2.3073
１１月	0.7821#	----	143.95	141.95	0.5882#	----	2.2986
平　均	*0.7648*	----	*143.183*	*141.183*	*0.5808*	----	*2.3109*

(備考)

１．交換レートは特記なきかぎり対米ドル相場（１米ドルにつき各通貨単位）。

２．出典は東京銀行月報より（毎月末日のレート）。

３．＃印は１２月の時点で東京銀行より入手の当該月末日のニューヨーク市場の終値。