SUPPLEMENTARY NOTE NO.1

PASIA SCHEME

MERIT OF POWER SUPPLY

TO LAWAS / BRUNEI

SUPPLEMENTARY NOTE No.1

PASIA SCHEME

MERIT OF POWER SUPPLY TO LAWAS/BRUNEI

This paper examines additional merits which may be accorded to the Pasia scheme, in case it supplies power to Lawas and Brunei (both east and west parts of Brunei) in addition to the Limbang area.

1. Development Scale of Pasia Scheme

Four (4) development alternatives at Pasia were examined for this purpose. They are,

Case	Installed Cap. (MW)	Energy (GWh)	Description
Case-1	12.4	106.9	Run-of-river (ROR) type at a scale recommended in the original plan, Q = 5.3 m 3/s
Case-2	25.9	189.0	ROR at a scale assessed to produce lowest cost energy (see Fig. 14.1 of this volume), Q = 11.1m 3/s
Case-3	18.7	153.8	ROR with a regulating pondage, Qmax = 7.2 m 3/s (Firm discharge x 2)
Case-4	29.0	211.6	ROR with a regulating pondage, Qmax = 11.1 m 3/s (same discharge as for Case-2).

Detailed features are given in Table-1.

2. Transmission Line System

Power will be supplied to the following demand centres:

Major Load Centre	Demand Level (MW) 1990	1995	2000	2010
(a) Lawas	1.2	1.8	2.5	4.5
(b) East Brunei		(To be informed)		
(c) Limbang	3.2	5.0	7.0	12.4
(d) West Brunei		(To be informed)		

In the above case, the transmission line route would be as shown in Fig-1. In order to ensure reliable power supply to Brunei, a double-circuit line would be constructed. The line voltage and length will be,

Section	Line Length (km)	Voltage/ circuit
Pasia - Trusan	69	66 kV DC
Trusan - Brunei (east) border	3	66 kV DC
Brunei (east) territory	26	66 kV DC
Border - Limbang	7	66 kV DC
Limbang - Brunei (west) border	15	66 kV DC
(66 kV total)	120 km	
Trusan - Lawas	17	33 kV SC
Total	17 km	

3. Evaluation Method and Criteria

The method of evaluation is virtually same as adopted in Section 14.3 of this volume.

(1) Investment horizon :

- 25 years from year 1986 to 2010

(2) Evaluation horizon :

- 50 years after commissioning of hydro

(3) Commissioning of Pasia :

- In 1994 at a full development scale

(4) Energy sale :

- Supply primarily to Lawas and Limbang.
- All remaining energy to be fed by Brunei system (assumming the system is sufficiently large)

(5) Benefit accounted :

- Saving in diesel installation cost in Lawas and Limbang
- Saving in diesel energy cost in Lawas, Limbang and Brunei

(6) Diesel costs :

- As estimated in Section 14.3 of this volume.

Cash flow schedules prepared on financial cost basis are shown in Tables 2 to 5 for each alternative development case. The evaluation of IRR will be based on economic costs.

4. Evaluated Indices

The results of evaluation are shown below:

Evaluated Indices

Description	Case-1	Case-2	Case-3	Case-4
Type of development	ROR	ROR	ROR with pondage	ROR with pondage
Power				
Installed capacity (MW)	12.4	25.9	18.7	29.0
Dependable output (MW)	8.5	8.5	18.7	29.0
Annual energy (GWh)	106.9	189.0	153.8	211.6
Evaluation indices :				
kWh cost* (M¢/kWh)	10.3	8.0	9.0	8.0
Net present value** (M$ million)	27.8	58.9	51.2	72.9
B/C**	1.35	1.61	1.59	1.77
EIRR	18.5	21.4	20.5	21.9

Notes : * On the basis that all energy is consumed
** At the discount rate of 10% p.a.

As indicated above, high evaluation indices are accorded in all alternative cases. Although relative merits of both Case-2 and Case-4 in terms of EIRR are almost comparable, a recommended plan would be Case-4 in view that it has a larger dependable output capacity and accordingly is more flexible for meeting the demands in Brunei.

It is noted, however, that the above gives optimistic indices in view of an assumption that all the surplus energy would be saleable to Brunei.

5. Further Surveys

It would be interesting to acquire the following information for examining the merit of Pasia scheme on a more realistic basis:

(a) Power demand level in Brunei

(b) Electricity price and actual power generation cost in Brunei (the latter is important in case that subsidy is incorporated in the former)

(c) Type of energy saleable to Brunei

(d) Delivery point of supply from Sarawak (herein assumed that it would be the border of Sarawak and west part of Brunei)

(e) A preliminary idea on rule of operation and maintenance of transmission lines crossing east part of Brunei.

TABLE-1 SALIENT FEATURES OF PASIA DEVELOPMENT
(4 ALTERNATIVE PLANS)

Demand scenario: Limbang + Lawas + Brunei

Description	Case-1	Case-2	Case-3	Case-4
Type of development	ROR	ROR	ROR with pondage	ROR with pondage
Firm discharge (m^3/s)	3.6	3.6	3.6	3.6
Plant discharge (m^3/s)	5.3	11.1	7.2	11.1
Effective head (m)	279.9	279.9	312.5	313.4
Full supply level (m)	677.0	677.0	701.0	701.0
Min. operating level (m)	-	-	694.5	694.5
Average operating level (m)	677.0	677.0	698.8	698.8
Tailwater level	366	366	366	366
Dam/weir height (m)	7	7	32	32
Headrace, length (m)	3,800	3,800	3,800	3,800
, diameter (m)	1.8	2.3	2.0	2.3
Penstock, length (m)	950	950	950	950
, diameter (m)	1.1	1.7	1.4	1.7
Installed capacity (MW)	12.4	25.9	18.7	29.0
Dependable output (MW)	8.5	8.5	18.7	29.0
Annual energy (GWh)				
- primary	72.0	72.0	80.5	80.7
- secondary	34.7	117.0	73.3	130.9
Total	106.9	189.0	153.8	211.6
Transmission line				
- length (km)	120	120	120	120
- Voltage (kV) x circuits	66 x 2	66 x 2	66 x 2	66 x 2
Construction cost (M$ million)	87.5	120.0	110.2	133.9

TABLE 2 (1) EVALUATION OF PROJECT - CASH FLOW SCHEME (1/4)

System : Limbang & Lawas & Brunei

Project: Pasia 12.4 MW (ROR without pondage)

Case : (1/2)

Description	Unit	1986	87	88	89	1990	91	92	93	94	95	96	97	98	99
1. Demand, peak power (MW)	MW	3.1	3.4	3.7	4.0	4.4	4.9	5.4	5.8	6.3	6.8	7.2	7.8	8.3	8.8
2. Demand, energy (GWh)	GWh	15.9	17.3	18.8	20.5	22.5	24.7	27.1	29.4	31.6	34.0	36.3	38.9	41.5	44.4
3. Annual load factor	%	59.0	58.0	58.0	59.0	58.0	58.0	57.0	58.0	57.0	57.0	58.0	57.0	57.0	58.0
4. Reserve retirement	MW	1.5	1.5	1.5	1.5	1.5	1.5	1.5	1.5	1.5	1.5	1.5	1.6	1.7	1.8
5. Required total capacity	MW	4.6	4.9	5.2	5.5	5.9	6.4	6.9	7.3	7.8	8.3	8.7	9.4	10.0	10.6
6. Diesel retirement	MW							-1.063		-1.060	-0.144	-0.2	-0.712	-0.056	-0.075
7. Power addition, hydro	MW									8.5					
,diesel	MW			+1.0		+1.0		+1.0							
8. System capacity		5.4	5.4	6.4	6.4	7.4	7.4	7.3	7.3	14.7	14.6	14.4	13.7	13.6	13.6
(H.S.O units)															
(L.O units)										(6.2)	(6.1)	(5.9)	(5.2)	(5.1)	(5.1)
9. Installation cost, hydro	M$ x mil.						17.50	43.75	26.25						
,diesel	"	0.8	2.4		0.8	3.2	2.4								
10. Power generation, hydro	GWh									31.6	34.0	36.3	30.9	41.5	44.4
,diesel	GWh	15.9	17.3	18.8	20.5	22.5	24.7	27.1	29.4	0	0	0	0	0	0
,diesel in Brunei	GWh									75.3	72.9	70.6	68.0	65.4	62.5
11. Hydro OM cost	M$ x mil.									0.66	0.66	0.66	0.66	0.66	0.66
12. Diesel OM cost,fixed	M$ x mil.	0.52	0.52	0.61	0.61	0.71	0.71	0.70	0.70	0.60	0.59	0.57	0.50	0.49	0.49
variable	M$ x mil.	0.08	0.09	0.10	0.11	0.12	0.13	0.14	0.15	0	0	0	0	0	0
fuel (HSD)	M$ x mil.														
fuel (LO)		1.98	2.16	2.35	2.56	2.81	3.08	3.38	3.67	0	0	0	0	0	0
13. Total cost (hydro + diesel)	M$ x mil.	3.38	5.17	3.06	4.08	6.84	23.82	47.97	30.77	1.26	1.25	1.23	1.16	1.15	1.15
(all diesel)	M$ x mil.														

Present Worth (M$ x million): Discount rate (%) All diesel (B) Rate of Return %

Hydro + diesel (A) Net present value (A-B)

TABLE 2 (2) EVALUATION OF PROJECT - CASH FLOW SCHEME (2/4)

System : Limbang & Lawas & Brunei Project : Case: (2/2)

Description	Unit	2000	01	02	03	04	2005	06	07	08	09	2010	2011-33	2033
1. Demand, peak power (MW)	MW	9.5	10.1	10.6	11.3	12.0	12.7	13.5	14.5	15.1	15.9	16.9	43.7	113.1
2. Demand, energy (GWh)	GWh	47.5	50.3	53.2	56.4	59.8	63.2	67.0	70.9	75.1	79.5	84.2	216.5	556.9
3. Annual load factor	%	57.0	57.0	57.0	57.0	57.0	57.0	57.0	56.0	56.0	56.0	56.0	56.0	56.0
4. Reserve retirement	MW	1.9	2.0	2.1	2.3	2.4	2.5	2.7	2.9	3.0	3.2	3.4	8.7	
5. Required total capacity	MW	11.4	12.1	12.7	13.5	14.4	15.2	16.2	17.4	18.1	19.1	20.3	52.4	
6. Diesel retirement	MW	-1.0	-1.05			-1.0		-1.0		-1.0				
7. Power addition, hydro	MW													
,diesel	MW		2.0			3.0		3.0		3.0		1.0		
8. System capacity	MW	12.6	13.5	13.5	13.5	15.5	15.5	17.5	17.5	19.5	19.5	20.5	52.4	
(H.S.O units)														
(L.O units)		(4.1)	(5.0)	(5.0)	(5.0)	(7.0)	(7.0)	(9.0)	(9.0)	(11.0)	(11.0)	(12.0)	(43.9)	
9. Installation cost, hydro	M$ x mil.													
,diesel	"	4.80		2.40	7.20	2.40	7.20	2.40	7.20	0.80	2.40			
10. Power generation, hydro	GWh	47.4	50.2	52.8	56.0	59.3	61.6	66.0	68.9	71.5	74.5	77.1	103.0	
,diesel	GWh	0.1	0.1	0.4	0.4	0.5	0.8	1.0	2.0	3.6	5.0	7.1	113.5	
,hydro-sale to Brunei	GWh	59.5	56.7	54.1	50.9	47.6	45.3	40.9	38.0	35.4	32.4	29.8	3.9	
11. Hydro OM cost	M$ x mil.	0.66	0.66	0.66	0.66	0.66	0.66	0.66	0.66	0.66	0.66	0.66	0.66	
12. Diesel OM cost, fixed	M$ x mil.	0.39	0.48	0.48	0.48	0.67	0.67	0.86	0.86	1.06	1.06	1.15	4.21	
variable	M$ x mil.	0.0	0.0	0.0	0.0	0.0	0.0	0.01	0.01	0.02	0.03	0.37	0.59	
fuel (HSO)	M$ x mil.													
fuel (LO)	M$ x mil.	0.01	0.01	0.05	0.05	0.06	0.10	0.12	0.25	0.45	0.62	0.89	14.16	
13. Total cost (hydro + diesel)	M$ x mil.	5.86	1.15	3.59	8.39	3.79	8.63	4.05	8.98	2.99	4.77	3.07	19.62	
(all diesel)	M$ x mil.													

Present Worth (M$ x million): Discount rate (%) All diesel (B) Rate of Return %

Hydro + diesel (A) Net present value (A-B)

TABLE 2 (3) EVALUATION OF PROJECT - CASH FLOW SCHEME (3/4)

System : Limbang & Lawas & Brunei Project: All Diesel Program for Pasia 12.4 MW Case : (1/2)

Description	Unit	1986	87	88	89	1990	91	92	93	94	95	96	97	98	99
1. Demand, peak power (MW)	MW	3.1	3.4	3.7	4.0	4.4	4.9	5.4	5.8	6.3	6.8	7.2	7.8	8.3	8.8
2. Demand, energy (GWh)	GWh	15.90	17.30	18.80	20.50	22.50	24.70	27.10	29.40	31.60	34.0	36.30	38.90	41.50	44.40
3. Annual load factor	%	59.0	58.0	58.0	59.0	58.0	58.0	57.0	58.0	57.0	57.0	58.0	57.0	57.0	58.0
4. Reserve retirement	MW	1.50	1.50	1.50	1.50	1.50	1.50	1.50	1.50	1.50	1.50	1.50	1.60	1.70	1.80
5. Required total capacity	MW	4.60	4.90	5.20	5.50	5.90	6.40	6.90	7.30	7.80	8.30	8.70	9.40	10.0	10.6
6. Diesel retirement	MW							-1.06		-1.060	-0.144	-0.2	-0.712	-0.056	-0.075
7. Power addition, hydro	MW														
,diesel	MW			+1.0		+1.0		+1.0		3.0			2.0		3.0
8. System capacity		5.40	5.40	6.4	6.4	7.4	7.4	7.3	7.3	9.2	9.1	8.9	10.2	10.1	13.1
(H.S.D units)															
(L.O units)															
9. Installation cost, hydro	M$ x mil.														
,diesel	"	0.80	2.40		0.80	3.20	2.40	2.40	7.20		1.60	4.80	2.40	7.20	1.60
10. Power generation, hydro	GWh														
,diesel	GWh	15.90	17.30	18.80	20.50	22.50	24.70	27.10	29.40	31.60	34.0	36.3	38.9	41.5	44.4
,diesel in Brunei	GWh									75.30	72.90	70.60	68.0	65.4	62.5
11. Hydro OM cost	M$ x mil.														
12. Diesel OM cost, fixed	M$ x mil.	0.52	0.52	0.61	0.61	0.71	0.71	0.70	0.70	0.88	0.87	0.85	0.98	0.97	1.26
variable	M$ x mil.	0.08	0.09	0.10	0.11	0.12	0.13	0.14	0.15	0.56	0.56	0.56	0.56	0.56	0.56
fuel (HSD)	M$ x mil.														
fuel (LO)		1.98	2.16	2.35	2.56	2.81	3.08	3.38	3.67	13.34	13.34	13.34	13.34	13.34	13.34
13. Total cost (hydro + diesel)	M$ x mil														
(all diesel)	M$ x mil.	3.38	5.17	3.06	4.08	6.84	6.32	6.62	11.72	14.78	16.37	19.55	17.28	12.07	16.76

Present Worth (M$ x million): Discount rate (%) All diesel (B) Rate of Return %
Hydro + diesel (A) Net present value (A-B)

TABLE 2 (4) EVALUATION OF PROJECT - CASH FLOW SCHEME (4/4)

System : Limbang & Lawas & Brunei Project : All Diesel Program for Pasia 12.4 MW Case: (2/2)

Description	Unit	2000	01	02	03	04	2005	06	07	08	09	2010	2011-33	2033
1. Demand, peak power (MW)	MW	9.5	10.1	10.6	11.3	12.0	12.7	13.5	14.5	15.1	15.9	16.9	43.7	113.1
2. Demand, energy (GWh)	GWh	47.5	50.3	53.2	56.4	59.8	63.2	67.0	70.9	75.1	79.5	84.2	216.5	556.9
3. Annual load factor	%	57.0	57.0	57.0	57.0	57.0	57.0	57.0	56.0	56.0	56.0	56.0	56.0	56.0
4. Reserve retirement	MW	1.9	2.0	2.1	2.3	2.4	2.5	2.7	2.9	3.0	3.2	3.4	8.7	
5. Required total capacity	MW	11.4	12.1	12.7	13.5	14.4	15.2	16.2	17.4	18.1	19.1	20.3	52.4	
		-1.0												
6. Diesel retirement	MW	-1.0	-1.05			-1.0		-1.0						
7. Power addition, hydro	MW													
,diesel	MW		2.0		3.0			4.0		3.0		4.0		
8. System capacity	MW	12.1	13.0	13.0	16.0	15.0	15.0	18.0	18.0	20.0	20.0	21.0	52.4	
(H.S.D units)														
(L.O units)														
9. Installation cost, hydro	M$ x mil.													
,diesel	"	4.80	2.40	7.20		3.20	9.60	2.40	7.20	3.20	9.60			
10. Power generation, hydro	GWh													
,diesel	GWh	47.5	50.3	53.2	56.4	59.8	63.2	67.0	70.9	75.1	79.5	84.2	216.5	
,diesel in Brunei	GWh	59.5	56.7	54.1	50.9	47.6	45.3	40.9	38.0	35.4	32.4	29.8	3.9	
11. Hydro OM cost	M$ x mil.													
12. Diesel OM cost, fixed	M$ x mil.	1.16	1.25	1.25	1.54	1.44	1.44	1.73	1.73	1.92	1.92	2.02	5.03	
variable	M$ x mil.	0.56	0.56	0.56	0.56	0.56	0.56	0.56	0.57	0.57	0.58	0.59	1.15	
fuel (HSD)	M$ x mil.													
fuel (LO)	M$ x mil.	13.35	13.35	13.39	13.39	13.40	13.54	13.47	13.59	13.79	13.97	14.22	27.51	
13. Total cost (hydro + diesel)	M$ x mil.													
(all diesel)	M$ x mil.	19.87	17.56	22.40	15.49	18.60	25.14	18.16	23.09	19.48	26.07	16.83	33.69	

Present Worth (M$ x million): Discount rate (%) All diesel (B) Rate of Return %
Hydro + diesel (A) Net present value (A-B)

TABLE 3 (1) EVALUATION OF PROJECT - CASH FLOW SCHEME (1/4)

System : Limbang & Lawas & Brunei Project: Pasia 25.9 MW (ROR without pondage) Case : (1/2)

Description	Unit	1986	87	88	89	1990	91	92	93	94	95	96	97	98	99
1. Demand, peak power (MW)	MW	3.1	3.4	3.7	4.0	4.4	4.9	5.4	5.8	6.3	6.8	7.2	7.8	8.3	8.8
2. Demand, energy (GWh)	GWh	15.9	17.3	18.8	20.5	22.5	24.7	27.1	29.4	31.6	34.0	36.3	38.9	41.5	44.4
3. Annual load factor	%	59.0	58.0	58.0	59.0	58.0	58.0	57.0	58.0	57.0	57.0	58.0	57.0	57.0	58.0
4. Reserve retirement	MW	1.5	1.5	1.5	1.5	1.5	1.5	1.5	1.5	1.5	1.5	1.5	1.6	1.7	1.8
5. Required total capacity	MW	4.6	4.9	5.2	5.5	5.9	6.4	6.9	7.3	7.8	8.3	8.7	9.4	10.0	10.6
6. Diesel retirement	MW							-1.063		-1.06	-0.144	-0.2	-0.712	-0.056	-0.075
7. Power addition, hydro	MW									8.5					
,diesel	MW			+1.0		+1.0		+1.0							
8. System capacity		5.4	5.4	6.4	6.4	7.4	7.4	7.3	7.3	14.7	14.6	14.4	13.7	13.6	13.6
(H.S.D units)															
(L.O units)										(6.2)	(6.1)	(5.9)	(5.2)	(5.1)	(5.1)
9. Installation cost, hydro	M$ x mil.						24.00	60.00	36.00						
,diesel	"	0.8	2.4		0.8	3.2	2.4								1.60
10. Power generation, hydro	GWh									31.6	34.0	36.3	38.9	41.4	44.3
,diesel	GWh	15.9	17.3	18.8	20.5	22.5	24.7	27.1	29.4	0	0	0	0	0.1	0.1
,hydro-sale to Brunei	GWh									157.4	155.0	152.7	150.1	147.6	144.7
11. Hydro OM cost	M$ x mil.									0.87	0.87	0.87	0.87	0.87	0.87
12. Diesel OM cost, fixed	M$ x mil.	0.52	0.52	0.61	0.61	0.71	0.71	0.70	0.70	0.60	0.59	0.57	0.50	0.49	0.49
variable	M$ x mil.	0.08	0.09	1.10	0.11	0.12	0.13	0.14	0.15	0	0	0	0	0	0
fuel (HSD)	M$ x mil.														
fuel (LO)		1.98	2.16	2.35	2.56	2.81	3.08	3.38	3.67	0	0	0	0	0.01	0.01
13. Total cost (hydro + diesel)	M$ x mil.	3.38	5.17	3.06	4.08	6.84	30.32	64.22	40.52	1.47	1.46	1.44	1.37	1.37	2.97
(all diesel)	M$ x mil.														

Present Worth (M$ x million): Discount rate (%) Hydro + diesel (A) All diesel (B) Net present value (A-B) Rate of Return %

TABLE 3 (2) EVALUATION OF PROJECT - CASH FLOW SCHEME (2/4)

System : Limbang & Lawas & Brunei

Project : Pasia 25.9 MW RGR without pondage

Case : (2/2)

Description	Unit	2000	01	02	03	04	2005	06	07	08	09	2010	2011-33	2033
1. Demand, peak power (MW)	MW	9.5	10.1	10.6	11.3	12.0	12.7	13.5	14.5	15.1	15.9	16.9	43.7	113.1
2. Demand, energy (GWh)	GWh	47.5	50.3	53.2	56.4	59.8	63.2	67.0	70.9	75.1	79.5	84.2	216.5	556.9
3. Annual load factor	%	57.0	57.0	57.0	57.0	57.0	57.0	57.0	56.0	56.0	56.0	56.0	56.0	56.0
4. Reserve retirement	MW	1.9	2.0	2.1	2.3	2.4	2.5	2.7	2.9	3.0	3.2	3.4	8.7	
5. Required total capacity	MW	11.4	12.1	12.7	13.5	14.4	15.2	16.2	17.4	18.1	19.1	20.3	52.4	
6. Diesel retirement	MW	-1.0	-1.05			-1.0		-1.0		-1.0				
7. Power addition, hydro	MW													
,diesel	MW		2.0			3.0		3.0		3.0		1.0		
8. System capacity	MW	12.6	13.5	13.5	13.5	15.5	15.5	17.5	17.5	19.5	19.5	20.5	52.4	
(H.S.D units)														
(L.O units)		(4.1)	(5.0)	(5.0)	(5.0)	(7.0)	(7.0)	(9.0)	(9.0)	(11.0)	(11.0)	(12.0)	(43.9)	
9. Installation cost, hydro	M$ x mil.													
,diesel	"	4.80		2.40	7.20	2.40	7.20	2.40	7.20	0.80	2.40			
10. Power generation, hydro	GWh	47.3	50.0	52.8	55.9	59.1	62.3	65.9	69.5	73.3	77.3	81.4	155.4	
,diesel	GWh	0.2	0.3	0.4	0.5	0.7	0.9	1.1	1.4	1.8	2.2	2.8	61.1	
,hydro-sale to Brunei	Gwh	141.7	139.0	136.2	133.1	129.9	126.7	123.1	119.5	115.7	111.7	107.6	33.6	
11. Hydro OM cost	M$ x mil.	0.87	0.87	0.87	0.87	0.87	0.87	0.87	0.87	0.87	0.87	0.87	0.87	
12. Diesel OM cost,fixed	M$ x mil.	0.39	0.48	0.48	0.48	0.67	0.67	0.86	0.86	1.06	1.06	1.15	4.21	
variable	M$ x mil.	0.0	0.0	0.0	0.0	0.0	0.0	0.01	0.01	0.01	0.01	0.01	0.32	
fuel (HSD)	M$ x mil.													
fuel (LO)	M$ x mil.	0.03	0.04	0.05	0.06	0.09	0.11	0.14	0.17	0.22	0.27	0.35	7.63	
13 Total cost (hydro + diesel)	M$ x mil.	6.09	1.39	3.80	8.61	4.03	8.85	4.28	9.11	2.96	4.61	2.38	13.03	
(all diesel)	M$ x mil.													

Present Worth (M$ x million): Discount rate (%) All diesel (B) Rate of Return %

Hydro + diesel (A) Net present value (A-B)

TABLE 3 (3) EVALUATION OF PROJECT -CASH FLOW SCHEME (3/4)

System : Limbang & Lawas & Brunei Project: All Diesel Program for Pasia 25.9 MW Case : (1/2)

Description	Unit	1986	87	88	89	1990	91	92	93	94	95	96	97	98	99
1. Demand, peak power (MW)	MW	3.1	3.4	3.7	4.0	4.4	4.9	5.4	5.8	6.3	6.8	7.2	7.8	8.3	8.8
2. Demand, energy (GWh)	GWh	15.9	17.3	18.8	20.5	22.5	24.7	27.1	29.4	31.6	34.0	36.3	38.9	41.5	44.4
3. Annual load factor	%	59.0	58.0	58.0	59.0	58.0	58.0	57.0	58.0	57.0	57.0	58.0	57.0	57.0	58.0
4. Reserve retirement	MW	1.5	1.5	1.5	1.5	1.5	1.5	1.5	1.5	1.5	1.5	1.5	1.6	1.7	1.8
5. Required total capacity	MW	4.6	4.9	5.2	5.5	5.9	6.4	6.9	7.3	7.8	8.3	8.7	9.4	10.0	10.6
6. Diesel retirement	MW							-1.063		-1.06	-0.144	-0.2	-0.712	-0.856	-0.075
7. Power addition, hydro	MW														
,diesel	MW			+1.0		+1.0		+1.0		3.0			2.0		3.0
8. System capacity		5.4	5.4	6.4	6.4	7.4	7.4	7.3	7.3	9.2	9.1	8.9	10.2	10.1	13.1
(H.S.D units)															
(L.O units)															
9. Installation cost, hydro	M$ x mil.														
,diesel	"	0.8	2.4		0.8	3.2	2.4	2.40	7.20		1.60	4.80	2.40	7.20	1.60
10. Power generation, hydro	GWh														
,diesel	GWh	15.9	17.3	18.8	20.5	22.5	24.7	27.1	29.4	31.6	34.0	36.3	38.9	41.5	44.4
,diesel in Brunei	GWh									157.4	155.0	152.7	150.1	147.6	144.7
11. Hydro OM cost	M$ x mil.														
12. Diesel OM cost, fixed	M$ x mil.	0.52	0.52	0.61	0.61	0.71	0.71	0.70	0.70	0.88	0.87	0.85	0.98	0.97	1.26
variable	M$ x mil.	0.08	0.09	1.10	0.11	0.12	0.13	0.14	0.15	0.98	0.98	0.98	0.98	0.98	0.98
fuel (HSD)	M$ x mil.														
fuel (LO)		1.98	2.16	2.35	2.56	2.81	3.08	3.38	3.67	23.59	23.59	23.59	23.59	23.60	23.60
13. Total cost (hydro + diesel)	M$ x mil.														
(all diesel)	M$ x mil.	3.38	5.17	3.06	4.08	6.84	6.32	6.62	11.72	23.58	27.04	30.29	27.95	32.75	27.44

Present Worth (M$ x million): Discount rate (%) All diesel (B) Rate of Return %
Hydro + diesel (A) Net present value (A-B)

TABLE 3 (4) EVALUATION OF PROJECT - CASH FLOW SCHEME (4/4)

System : Limbang & Lawas & Brunei

Project : All Diesel Program for Pasia 25.9 MW

Case: (2/2)

Description	Unit	2000	01	02	03	04	2005	06	07	08	09	2010	2011-33	2033
1. Demand, peak power (MW)	MW	9.5	10.1	10.6	11.3	12.0	12.7	13.5	14.5	15.1	15.9	16.9	43.7	113.1
2. Demand, energy (GWh)	GWh	47.5	50.3	53.2	56.4	59.8	63.2	67.0	70.9	75.1	79.5	84.2	216.5	556.9
3. Annual load factor	%	57.0	57.0	57.0	57.0	57.0	57.0	57.0	56.0	56.0	56.0	56.0	56.0	56.0
4. Reserve capacity	MW	1.9	2.0	2.1	2.3	2.4	2.5	2.7	2.9	3.0	3.2	3.4	8.7	
5. Required total capacity	MW	11.4	12.1	12.7	13.5	14.4	15.2	16.2	17.4	18.1	19.1	20.3	52.4	
		-1.0												
6. Diesel retirement	MW	-1.0	-1.05			-1.0		-1.0		-1.0		-3.0		
7. Power addition, hydro	MW													
,diesel	MW		2.0		3.0			4.0		3.0		4.0		
8. System capacity	MW	12.1	13.0	13.0	16.0	15.0	15.0	18.0	18.0	20.0	20.0	21.0	52.4	
(H.S.D units)														
(L.O units)														
9. Installation cost, hydro	M$ x mil.													
,diesel	"	4.80	2.40	7.20		3.20	9.60	2.40	7.20	3.20	9.60			
10. Power generation, hydro	GWh													
,diesel	GWh	47.5	50.3	53.2	56.4	59.8	63.2	67.0	70.9	75.1	79.5	84.2	216.5	
,hydro-sale to Brunei	Gwh	141.7	139.0	136.2	133.1	129.9	126.7	123.1	119.5	115.7	111.7	107.6	33.6	
11. Hydro OM cost	M$ x mil.													
12. Diesel OM cost, fixed	M$ x mil.	1.16	1.25	1.25	1.54	1.44	1.44	1.73	1.73	1.92	1.92	2.02	5.03	
variable	M$ x mil.	0.98	0.98	0.98	0.98	0.99	0.99	0.99	0.99	0.99	0.99	1.00	1.30	
fuel (HSD)	M$ x mil.													
fuel (LO)	M$ x mil.	23.61	23.62	23.64	23.65	23.67	23.70	23.72	23.76	23.81	23.86	23.94	31.21	
13. Total cost (hydro + diesel)	M$ x mil.													
(all diesel)	M$ x mil.	30.55	28.25	33.07	26.17	29.30	35.73	28.84	33.68	29.92	36.37	26.96	37.54	

Present Worth (M$ x million): Discount rate (%) All diesel (B) Rate of Return %

Hydro + diesel (A) Net present value (A-B)

TABLE 4 (1) EVALUATION OF PROJECT - CASH FLOW SCHEME (1/4)

System : Limbang & Lawas & Brunei Project: Pasia 18.7 MW W/Reg. Pondage Case : (1/2)

Description	Unit	1986	87	88	89	1990	91	92	93	94	95	96	97	98	99
1. Demand, peak power (MW)	MW	3.1	3.4	3.7	4.0	4.4	4.9	5.4	5.8	6.3	6.8	7.2	7.8	8.3	8.8
2. Demand, energy (GWh)	GWh	15.9	17.3	18.8	20.5	22.5	24.7	27.1	29.4	31.6	34.0	36.3	38.9	41.5	44.4
3. Annual load factor	%	59.0	58.0	58.0	59.0	58.0	58.0	57.0	58.0	57.0	57.0	58.0	57.0	57.0	58.0
4. Reserve capacity	MW	1.5	1.5	1.5	1.5	1.5	1.5	1.5	1.5	1.5	1.5	1.5	1.6	1.7	1.8
5. Required total capacity	MW	4.6	4.9	5.2	5.5	5.9	6.4	6.9	7.3	7.8	8.3	8.7	9.4	10.0	10.6
6. Diesel retirement	MW							-1.063		-1.06	-0.144	-0.2	-0.712	-0.056	-0.075
7. Power addition, hydro	MW									18.7					
,diesel	MW			+1.0		+1.0		+1.0							
8. System capacity		5.4	5.4	6.4	6.4	7.4	7.4	7.3	7.3	24.9	24.8	24.6	23.9	23.8	23.8
(H.S.D units)															
(L.O units)										(6.2)	(6.1)	(5.9)	(5.2)	(5.1)	(5.1)
9. Installation cost, hydro	M$ x mil.						22.04	55.10	33.06						
,diesel	"	0.8	2.4		0.8	3.2	2.4								
10. Power generation, hydro	GWh									31.6	34.0	36.3	38.9	41.5	44.4
,diesel	GWh	15.9	17.3	18.8	20.5	22.5	24.7	27.1	29.4						
,hydro-sale to Brunei	GWh									122.2	119.8	117.5	114.9	112.3	109.4
11. Hydro OM cost	M$ x mil.									0.81	0.81	0.81	0.84	0.81	0.81
12. Diesel OM cost,fixed	M$ x mil.	0.52	0.52	0.61	0.61	0.71	0.71	0.70	0.70	0.60	0.59	0.57	0.50	0.49	0.49
variable	M$ x mil.	0.08	0.09	0.10	0.11	0.12	0.13	0.14	0.15	0	0	0	0	0	0
fuel (HSD)	M$ x mil.														
fuel (LO)		1.98	2.16	2.35	2.56	2.81	3.08	3.38	3.67	0	0	0	0	0	0
13. Total cost (hydro + diesel)	M$ x mil.	3.38	5.17	3.06	4.08	6.84	28.36	59.32	37.58	1.41	1.4	1.88	1.31	1.3	1.3
(all diesel)	M$ x mil.														

Present Worth (M$ x million): Discount rate (%) Hydro + diesel (A) All diesel (B) Net present value (A-B) Rate of Return %

TABLE 4 (2) EVALUATION OF PROJECT - CASH FLOW SCHEME (2/4)

System : Limbang & Lawas & Brunei Project : Pasia 18.7 MW with regulating pondage Case: (2/2)

Description	Unit	2000	01	02	03	04	2005	06	07	08	09	2010	2011-33	2033
1. Demand, peak power (MW)	MW	9.5	10.1	10.6	11.3	12.0	12.7	13.5	14.5	15.1	15.9	16.9	43.7	113.1
2. Demand, energy (GWh)	GWh	47.5	50.3	53.2	56.4	59.8	63.2	67.0	70.9	75.1	79.5	84.2	216.5	556.9
3. Annual load factor	%	57.0	57.0	57.0	57.0	57.0	57.0	57.0	56.0	56.0	56.0	56.0	56.0	56.0
4. Reserve capacity	MW	1.9	2.0	2.1	2.3	2.4	2.5	2.7	2.9	3.0	3.2	3.4	8.7	
5. Required total capacity	MW	11.4	12.1	12.7	13.5	14.4	15.2	16.2	17.4	18.1	19.1	20.3	52.4	
		-1.0												
6. Diesel retirement	MW	-1.0	-1.05			-1.0		-1.0		-1.0				
7. Power addition, hydro	MW													
,diesel	MW										2.0			
8. System capacity	MW	22.8	21.7	21.7	21.7	20.7	20.7	19.7	19.7	18.7	20.7	20.7	52.4	
(H.S.D units)														
(L.O units)		(4.1)	(3.0)	(3.0)	(3.0)	(2.0)	(2.0)	(1.0)	(1.0)	(0)	(0)	(0)	(33.7)	
9. Installation cost, hydro	M$ x mil.													
,diesel	"								1.60	4.80				
10. Power generation, hydro	GWh	47.4	50.1	52.9	56.0	59.3	62.6	66.2	69.9	73.9	78.0	82.2	141.2	
,diesel	GWh	0.1	0.2	0.3	0.4	0.5	0.6	0.8	1.0	1.2	1.5	2.0	75.3	
,hydro-sale to Brunei	Gwh	106.4	103.7	100.9	97.8	94.5	91.2	87.6	83.9	79.9	75.8	71.6	12.6	
11. Hydro OM cost	M$ x mil.	0.81	0.81	0.84	0.81	0.81	0.81	0.81	0.81	0.81	0.81	0.81	0.81	
12. Diesel OM cost, fixed	M$ x mil.	0.39	0.29	0.29	0.29	0.19	0.19	0.10	0.10	0	0	0	3.24	
variable	M$ x mil.	0	0	0	0	0	0	0	0.01	0.01	0.01	0.01	0.39	
fuel (HSD)	M$ x mil.													
fuel (LO)	M$ x mil.	0.01	0.03	0.04	0.05	0.06	0.07	0.10	0.12	0.15	0.19	0.25	9.40	
13. Total cost (hydro + diesel)	M$ x mil.	1.21	1.13	1.14	1.15	1.06	1.07	1.01	2.64	5.77	1.01	1.16	13.84	
(all diesel)	M$ x mil.													

Present Worth (M$ x million): Discount rate (%) All diesel (B) Rate of Return %
Hydro + diesel (A) Net present value (A-B)

TABLE 4 (3) EVALUATION OF PROJECT - CASH FLOW SCHEME (3/4)

System : Limbang & Lawas & Brunei Project: All Diesel for Pasia 18.7 MW Case : (1/2)

Description	Unit	1986	87	88	89	1990	91	92	93	94	95	96	97	98	99
1. Demand, peak power (MW)	MW	3.1	3.4	3.7	4.0	4.4	4.9	5.4	5.8	6.3	6.8	7.2	7.8	8.3	8.8
2. Demand, energy (GWh)	GWh	15.9	17.3	18.8	20.5	22.5	24.7	27.1	29.4	31.6	34.0	36.3	38.9	41.5	44.4
3. Annual load factor	%	59.0	58.0	58.0	59.0	58.0	58.0	57.0	58.0	57.0	57.0	58.0	57.0	57.0	58.0
4. Reserve capacity	MW	1.5	1.5	1.5	1.5	1.5	1.5	1.5	1.5	1.5	1.5	1.5	1.6	1.7	1.8
5. Required total capacity	MW	4.6	4.9	5.2	5.5	5.9	6.4	6.9	7.3	7.8	8.3	8.7	9.4	10.0	10.6
6. Diesel retirement	MW							-1.063		-1.06	-0.144	-0.2	-0.712	-0.056	-0.075
7. Power addition, hydro	MW														
,diesel	MW			+1.0		+1.0		+1.0		3.0			2.0		3.0
8. System capacity		5.4	5.4	6.4	6.4	7.4	7.4	7.3	7.3	9.2	9.1	8.9	10.2	10.1	13.1
(H.S.D units)															
(L.O units)															
9. Installation cost, hydro	M$ x mil.														
,diesel	"	0.8	2.4		0.8	3.2	2.4	2.40	7.20		1.60	4.80	2.40	7.20	1.60
10. Power generation, hydro	GWh														
,diesel	GWh	15.9	17.3	18.8	20.5	22.5	24.7	27.1	29.4	31.6	34.0	36.3	38.9	41.5	44.4
,hydro-sale in Brunei	GWh									122.2	119.8	117.5	114.9	112.3	109.4
11. Hydro OM cost	M$ x mil.														
12. Diesel OM cost, fixed	M$ x mil.	0.52	0.52	0.61	0.61	0.71	0.71	0.70	0.70	0.88	0.87	0.85	0.98	0.97	1.26
variable	M$ x mil.	0.08	0.09	0.10	0.11	0.12	0.13	0.14	0.15	0.80	0.80	0.80	0.80	0.80	0.80
fuel (HSD)	M$ x mil.														
fuel (LO)		1.98	2.16	2.35	2.56	2.81	3.08	3.38	3.67	19.19	19.19	19.19	19.19	19.19	19.19
13. Total cost (hydro + diesel)	M$ x mil.														
(all diesel)	M$ x mil.	3.38	5.17	3.06	4.08	6.84	6.32	6.62	11.72	20.87	22.46	25.64	23.37	28.26	22.25

Present Worth (M$ x million): Discount rate (%) Hydro + diesel (A) All diesel (B) Net present value (A-B) Rate of Return %

TABLE 4 (4) EVALUATION OF PROJECT - CASH FLOW SCHEME (4/4)

System : Limbang & Lawas & Brunei | Project : All Diesel for Pasia 18.7 MW | Case : (2/2)

Description	Unit	2000	01	02	03	04	2005	06	07	08	09	2010	2011-33	2033
1. Demand, peak power (MW)	MW	9.50	10.10	10.60	11.30	12.0	12.7	13.50	14.50	15.10	15.90	16.90	43.70	113.10
2. Demand, energy (GWh)	GWh	47.50	50.30	53.20	56.40	59.80	63.20	67.0	70.9	75.1	79.5	84.2	216.5	556.9
3. Annual load factor	%	57.0	57.0	57.0	57.0	57.0	57.0	57.0	56.0	56.0	56.0	56.0	56.0	56.0
4. Reserve capacity	MW	1.9	2.0	2.1	2.3	2.4	2.5	2.7	2.9	3.0	3.2	3.4	8.7	
5. Required total capacity	MW	11.4	12.1	12.7	13.5	14.4	15.2	16.2	17.4	18.1	19.1	20.3	52.4	
		-1.0												
6. Diesel retirement	MW	-1.0	-1.05			-1.0		-1.0		-1.0		-3.0		
7. Power addition, hydro	MW													
,diesel	MW		2.0		3.0			4.0		3.0		4.0		
8. System capacity	MW	12.1	13.0	13.0	16.0	15.0	15.0	18.0	18.0	20.0	20.0	21.0	52.4	
(H.S.D units)														
(L.O units)														
9. Installation cost, hydro	M$ x mil.													
,diesel	"	4.80	2.40	7.20		3.20	9.60	2.40	7.20	3.20	9.60			
10. Power generation, hydro	GWh													
,diesel	GWh	47.5	50.3	53.2	56.4	59.8	63.2	67.0	70.9	75.1	79.5	84.2	216.5	
,diesel in Brunei	Gwh	106.4	103.3	100.9	97.8	94.5	91.2	87.6	83.9	79.9	75.8	71.6	12.6	
11. Hydro OM cost	M$ x mil.													
12. Diesel OM cost, fixed	M$ x mil.	1.16	1.25	1.25	1.54	1.44	1.44	1.73	1.73	1.92	1.92	2.02	5.03	
variable	M$ x mil.	0.80	0.80	0.80	0.80	0.80	0.80	0.80	0.80	0.81	0.81	0.81	1.19	
fuel (HSD)	M$ x mil.													
fuel (LO)	M$ x mil.	19.20	19.17	19.23	19.24	19.26	19.27	19.29	19.32	19.34	19.38	19.44	28.59	
13. Total cost (hydro + diesel)	M$ x mil.													
(all diesel)	M$ x mil.	25.96	23.62	28.48	21.58	24.70	31.11	24.22	29.05	25.27	31.71	22.27	34.81	

Present Worth (M$ x million): Discount rate (%) | All diesel (B) | Rate of Return %

Hydro + diesel (A) | Net present value (A-B)

TABLE 5 (1) EVALUATION OF PROJECT - CASH FLOW SCHEME (1/4)

System : Limbang & Lawas & Brunei Project: Pasia 29.0 MW W/Reg. Pondage Case : (1/2)

Description	Unit	1986	87	88	89	1990	91	92	93	94	95	96	97	98	99
1. Demand, peak power (MW)	MW	3.1	3.4	3.7	4.0	4.4	4.9	5.4	5.8	6.3	6.8	7.2	7.8	8.3	8.8
2. Demand, energy (GWh)	GWh	15.9	17.3	18.8	20.5	22.5	24.7	27.1	29.4	31.6	34.0	36.3	38.9	41.5	44.4
3. Annual load factor	%	59.0	58.0	58.0	59.0	58.0	58.0	57.0	58.0	57.0	57.0	58.0	57.0	57.0	58.0
4. Reserve capacity	MW	1.5	1.5	1.5	1.5	1.5	1.5	1.5	1.5	1.5	1.5	1.5	1.6	1.7	1.8
5. Required total capacity	MW	4.6	4.9	5.2	5.5	5.9	6.4	6.9	7.3	7.8	8.3	8.7	9.4	10.0	10.6
6. Diesel retirement	MW							-1.063		-1.06	-0.144	-0.2	-0.712	-0.056	-0.075
7. Power addition, hydro	MW									29.0					
,diesel	MW			+1.0		+1.0		+1.0							
8. System capacity		5.4	5.4	6.4	6.4	7.4	7.4	7.3	7.3	35.2	35.1	34.9	34.2	34.1	34.1
(H.S.D units)															
(L.O units)										(6.2)	(6.1)	(5.9)	(5.2)	(5.1)	(5.1)
9. Installation cost, hydro	M$ x mil.						26.78	66.95	40.17						
,diesel	"	0.8	2.4		0.8	3.2	2.4								
10. Power generation, hydro	GWh									31.6	34.0	36.3	38.9	41.5	44.4
,diesel	GWh	15.9	17.3	18.8	20.5	22.5	24.7	27.1	29.4	0	0	0	0	0	0
,hydro-sale to Brunei	GWh									180.0	177.6	175.3	172.7	170.1	167.2
11. Hydro OM cost	M$ x mil.									0.94	0.94	0.94	0.94	0.94	0.94
12. Diesel OM cost, fixed	M$ x mil.	0.52	0.52	0.61	0.61	0.71	0.71	0.70	0.70	0.60	0.59	0.57	0.50	0.49	0.49
variable	M$ x mil.	0.08	0.09	0.10	0.11	0.12	0.13	0.14	0.15	0	0	0	0	0	0
fuel (HSD)	M$ x mil.														
fuel (LO)		1.98	2.16	2.35	2.56	2.81	3.08	3.38	3.67	0	0	0	0	0	0
13. Total cost (hydro + diesel)	M$ x mil.	3.38	5.17	3.06	4.08	6.84	33.10	71.17	44.69	1.54	1.53	1.51	1.44	1.43	1.43
(all diesel)	M$ x mil.														

Present Worth (M$ x million): Discount rate (%) Hydro + diesel (A) All diesel (B) Net present value (A-B) Rate of Return %

TABLE 5 (2) EVALUATION OF PROJECT - CASH FLOW SCHEME (2/4)

System : Limbang & Lawas & Brunei

Project : Pasia 29.0 MW W/Reg. Pondage

Case : (2/2)

Description	Unit	2000	01	02	03	04	2005	06	07	08	09	2010	2011-33	2033
1. Demand, peak power (MW)	MW	9.5	10.1	10.6	11.3	12.0	12.7	13.5	14.5	15.1	15.9	16.9	43.7	113.1
2. Demand, energy (GWh)	GWh	47.5	50.3	53.2	56.4	59.8	63.2	67.0	70.9	75.1	79.5	84.2	216.5	556.9
3. Annual load factor	%	57.0	57.0	57.0	57.0	57.0	57.0	57.0	56.0	56.0	56.0	56.0	56.0	56.0
4. Reserve capacity	MW	1.9	2.0	2.1	2.3	2.4	2.5	2.7	2.9	3.0	3.2	3.4	8.7	
5. Required total capacity	MW	11.4	12.1	12.7	13.5	14.4	15.2	16.2	17.4	18.1	19.1	20.3	52.4	
		-1.0												
6. Diesel retirement	MW	-1.0	-1.05			-1.0		-1.0		-1.0				
7. Power addition, hydro	MW													
,diesel	MW													
8. System capacity	MW	33.1	32.0	32.0	32.0	31.0	31.0	30.0	30.0	29.0	29.0	29.0	52.4	
(H.S.D units)														
(L.O units)		(4.1)	(3.0)	(3.0)	(3.0)	(2.0)	(2.0)	(1.0)	(1.0)	(0)	(0)	(0)	(23.4)	
9. Installation cost, hydro	M$ x mil.													
,diesel	"													
10. Power generation, hydro	GWh	47.4	50.1	53.0	56.1	59.3	62.6	66.2	70.0	73.9	78.0	82.2	166.0	
,diesel	GWh	0.1	0.2	0.2	0.3	0.5	0.6	0.8	0.9	1.2	1.5	2.0	50.5	
,hydro-sale to Brunei	Gwh	161.2	161.5	158.6	155.5	152.3	149.0	145.4	141.6	137.7	133.6	129.4	45.6	
11. Hydro OM cost	M$ x mil.	0.94	0.94	0.94	0.94	0.94	0.94	0.94	0.94	0.94	0.94	0.94	0.94	
12. Diesel OM cost, fixed	M$ x mil.	0.39	0.29	0.29	0.29	0.19	0.19	0.10	0.10	0	0	0	2.25	
variable	M$ x mil.	0	0	0	0	0	0	0	0	0.01	0.01	0.01	0.26	
fuel (HSD)	M$ x mil.													
fuel (LO)	M$ x mil.	0.01	0.03	0.03	0.04	0.06	0.07	0.10	0.11	0.15	0.19	0.25	6.30	
13. Total cost (hydro + diesel)	M$ x mil.	1.34	1.26	1.26	1.29	1.19	1.20	1.14	1.15	1.10	1.14	1.20	9.75	
(all diesel)	M$ x mil.													

Present Worth (M$ x million): Discount rate (%) All diesel (B) Rate of Return %

Hydro + diesel (A) Net present value (A-B)

TABLE 5 (3) EVALUATION OF PROJECT - CASH FLOW SCHEME (3//4)

System : Limbang & Lawas & Brunei Project: All Diesel Program for Pasia 29.0 MW Case : (1/2)

Description	Unit	1986	87	88	89	1990	91	92	93	94	95	96	97	98	99
1. Demand, peak power (MW)	MW	3.1	3.4	3.7	4.0	4.4	4.9	5.4	5.8	6.3	6.8	7.2	7.8	8.3	8.8
2. Demand, energy (GWh)	GWh	15.9	17.3	18.8	20.5	22.5	24.7	27.1	29.4	31.6	34.0	36.3	38.9	41.5	44.4
3. Annual load factor	%	59.0	58.0	58.0	59.0	58.0	58.0	57.0	58.0	57.0	57.0	58.0	57.0	57.0	58.0
4. Reserve capacity	MW	1.5	1.5	1.5	1.5	1.5	1.5	1.5	1.5	1.5	1.5	1.5	1.6	1.7	1.8
5. Required total capacity	MW	4.6	4.9	5.2	5.5	5.9	6.4	6.9	7.3	7.8	8.3	8.7	9.4	10.0	10.6
6. Diesel retirement	MW							-1.063		-1.06	-0.144	-0.2	-0.712	-0.056	-0.075
7. Power addition, hydro	MW														
,diesel	MW			+1.0		+1.0		+1.0		3.0			2.0		3.0
8. System capacity		5.4	5.4	6.4	6.4	7.4	7.4	7.3	7.3	9.2	9.1	8.9	10.2	10.1	13.1
(H.S.D units)															
(L.O units)															
9. Installation cost, hydro	M$ x mil.														
,diesel	"	0.8	2.4		0.8	3.2	2.4	2.40	7.20		1.60	4.80	2.40	7.20	1.60
10. Power generation, hydro	GWh														
,diesel	GWh	15.9	17.3	18.8	20.5	22.5	24.7	27.1	29.4	31.6	34.0	36.3	38.9	41.5	44.4
,saving of diesel in Brunei	GWh									180.0	177.6	175.3	172.7	170.1	167.2
11. Hydro OM cost	M$ x mil.														
12. Diesel OM cost,fixed	M$ x mil.	0.52	0.52	0.61	0.61	0.71	0.71	0.70	0.70	0.88	0.87	0.85	0.98	0.97	1.26
variable	M$ x mil.	0.08	0.09	0.10	0.11	0.12	0.13	0.14	0.15	1.10	1.10	1.10	1.10	1.10	1.10
fuel (HSD)	M$ x mil.														
fuel (LO)		1.98	2.16	2.35	2.56	2.81	3.08	3.38	3.67	26.41	26.41	26.41	26.41	26.41	26.41
13. Total cost (hydro + diesel)	M$ x mil.														
(all diesel)	M$ x mil.	3.38	5.17	3.06	4.08	3.38	6.32	6.02	11.72	28.39	29.92	23.16	30.89	35.68	30.37

Present Worth (M$ x million): Discount rate (%) All diesel (B) Rate of Return %
Hydro + diesel (A) Net present value (A-B)

TABLE 5 (4) EVALUATION OF PROJECT - CASH FLOW SCHEME (4/4)

System : Limbang & Lawas & Brunei | Project : All Diesel Program for Pasia 29 MW | Case : (2/2)

Description	Unit	2000	01	02	03	04	2005	06	07	08	09	2010	2011-33	2033
1. Demand, peak power (MW)	MW	9.5	10.1	10.6	11.3	12.0	12.7	13.5	14.5	15.1	15.9	16.9	43.7	113.1
2. Demand, energy (GWh)	GWh	47.5	50.3	53.2	56.4	59.8	63.2	67.0	70.9	75.1	79.5	84.2	216.5	556.9
3. Annual load factor	%	57.0	57.0	57.0	57.0	57.0	57.0	57.0	56.0	56.0	56.0	56.0	56.0	56.0
4. Reserve capacity	MW	1.9	2.0	2.1	2.3	2.4	2.5	2.7	2.9	3.0	3.2	3.4	8.7	
5. Required total capacity	MW	11.4	12.1	12.7	13.5	14.4	15.2	16.2	17.4	18.1	19.1	20.3	52.4	
		-1.0												
6. Diesel retirement	MW	-1.0	-1.05			-1.0		-1.0		-1.0		-3.0		
7. Power addition, hydro	MW													
,diesel	MW		2.0		3.0			4.0		3.0		4.0		
8. System capacity	MW	12.1	13.0	13.0	16.0	15.0	15.0	18.0	18.0	20.0	20.0	21.0	52.4	
(H.S.D units)														
(L.O units)														
9. Installation cost, hydro	M$ x mil.													
,diesel	"	4.80	2.40	7.20		3.20	9.60	2.40	7.20	3.20	9.60			
10. Power generation, hydro	GWh													
,diesel	GWh	47.5	50.3	53.2	56.4	59.8	63.2	67.0	70.9	75.1	79.5	84.2	216.5	
,saving of diesel in Brunei	Gwh	164.2	161.5	158.6	155.5	152.3	149.0	145.4	141.6	137.7	133.6	129.4	45.6	
11. Hydro OM cost	M$ x mil.													
12. Diesel OM cost, fixed	M$ x mil.	1.16	1.25	1.25	1.54	1.44	1.44	1.73	1.73	1.92	1.92	2.02	5.03	
variable	M$ x mil.	1.10	1.10	1.10	1.10	1.10	1.10	1.10	1.11	1.11	1.11	1.11	1.36	
fuel (HSD)	M$ x mil.													
fuel (LO)	M$ x mil.	26.42	26.43	26.43	26.54	26.47	26.48	26.51	26.52	26.56	26.59	26.66	32.71	
13. Total cost (hydro + diesel)	M$ x mil.													
(all diesel)	M$ x mil.	33.48	31.18	35.98	29.09	32.21	38.62	31.74	36.56	32.79	39.22	29.79	39.10	

Present Worth (M$ x million): Discount rate (%) | Hydro + diesel (A) | All diesel (B) | Net present value (A-B) | Rate of Return %

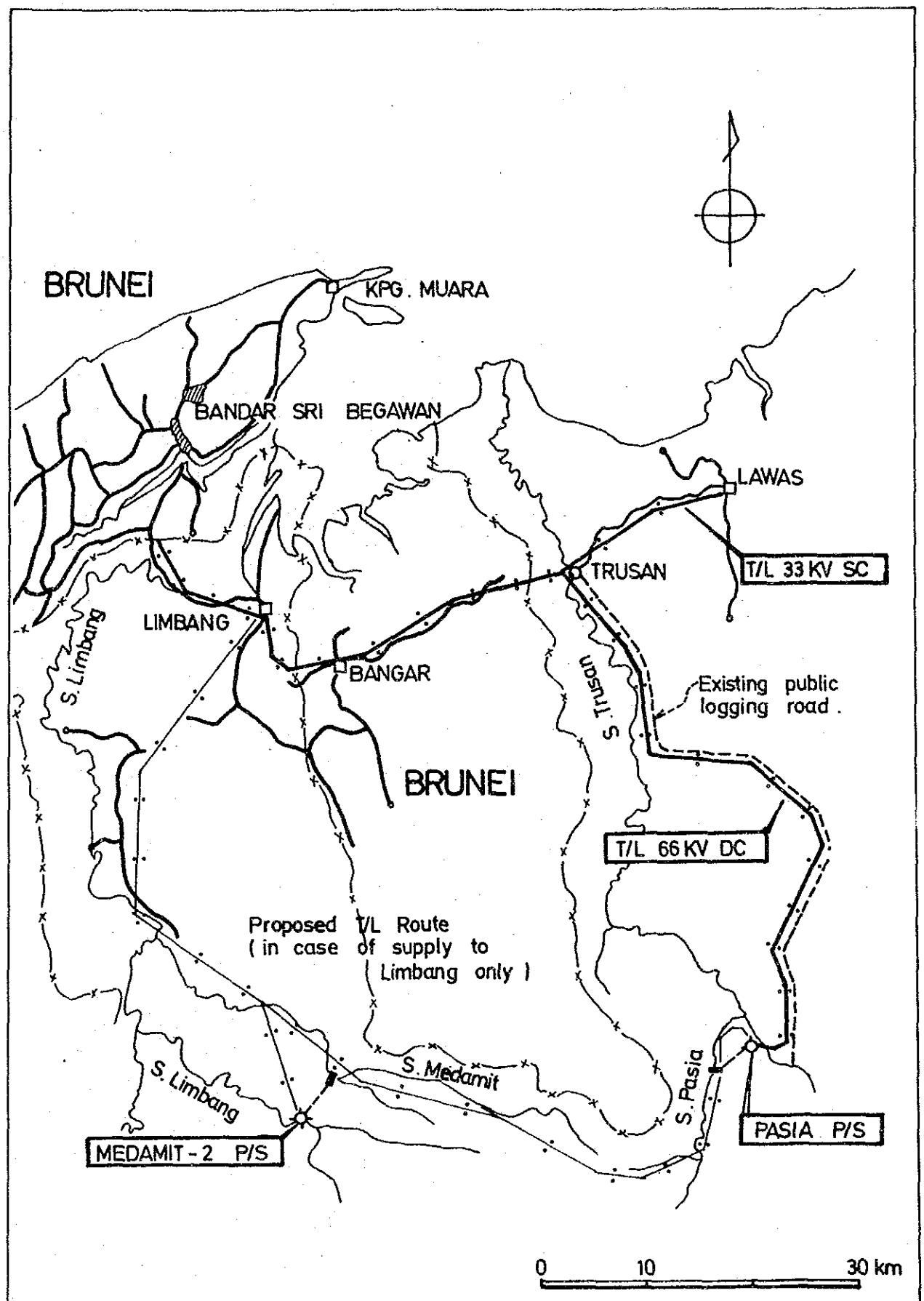

Fig. 1. PRELIMINARY PLAN OF TRANSMISSION LINE ROUTE

GOVERNMENT OF MALAYSIA
FEASIBILITY STUDY
SMALL SCALE HYDROELECTRIC POWER PROJECT IN SARAWAK
JAPAN INTERNATIONAL COOPERATION AGENCY

SUPPLEMENTARY NOTE NO.2

MUKOH SCHEME
EVALUATION OF SCHEME IN CASE OF EXTRA DEMANDS FROM TIMBER INDUSTRIES

SUPPLEMENTARY NOTE NO. 2

MUKOH SCHEME

EVALUATION OF SCHEME IN CASE OF EXTRA POWER DEMANDS FROM TIMBER INDUSTRIES

There is a great possibility that future power demand increases in the Kapit area in view of potentiality for development of timber industries. This Note is to examine how the merit of Mukoh scheme would be improved in case such incremental demands from timber industries (saw mills) arise.

1. Development Scale at the Mukoh Site

Two (2) development alternatives examined in Sections 14.3 and 14.4 of this volume (main text) are also taken into consideration in this study:

Case	Installed capa. (MW)	Energy (GWh)	Description
Case-1	1.94	16.7	Run-of-river development with a minimum scale, as proposed in the original plan, Q = 7.4 m 3/s (firm discharge)
Case-2	4.45	36.6	Run-of-river development with a regulating pondage, Q = 14.8 m 3/s (2 times x firm discharge)

The detailed features are given in Table 1.

2. Demand Increase Scenario

It is not known at the moment in what extent timber companies would pay interest to future improved power supply condition in the Kapit area which would be attainable by incorporation of the Mukoh scheme.

This study assumes the following three scenarios of increment demands:

(a) Demand from the timber industries will be 0.5 MW in 1994 when Mukoh is commissioned and thereafter increase by 0.1 MW per year up to 1 MW in total demand.

(b) Demand will be 1.0 MW initially in 1994 and increase at a rate of 0.2 MW per year to 2 MW in total demand.

(c) Demand in the Kapit area is as large as 6.6 MW in 1994, which would feed all primary energy from Mukoh (16.7 GWh). This case represents that most part of hydro benefit arises from the beginning.

A load factor is assumed to be 0.5.

3. Evaluation Method and Criteria

The evaluation method is identical to that adopted in the main text as follows:

(1) Investment horizon:

- 25 years from 1986 to 2010

(2) Evaluation horizon

- 50 years after commissioning of hydro

(3) Commissioning of Mukoh

- First unit in 1994 and second unit in the year when the system capacity becomes critical

(4) Energy sale

- As the system requires

(5) Benefits accounted

- Saving of diesel installation cost by both SESCO and timber companies
- Saving of diesel energy costs including fuels by both SESCO and timber companies

(6) Diesel costs

- As estimated in Section 14.3 of the main text.

Tables 3 to 11 show the cash flow schedules of two

development alternatives combined with three demand scenarios on the financial cost basis.

The evaluation of IRR will be based on economic costs.

4. Evaluated Indices

The results of evaluation are detailed in Table 2 and summarized below:

Evaluated Index (EIRR in %)

Demand Scenario	Development Scale Case-1 (1.9 MW)	Case-2 (4.5 MW)
(a) Additional demand 0.5 MW in 1994 + 0.1 MW x 5 years	12.5	10.6
(b) Additional demand 1.0 MW in 1994 + 0.2 MW x 5 years	13.2	12.0
(c) System demand sufficiently large at 6.6 MW in 1994	15.7	15.8

As seen above, the attractiveness of Mukoh will be significantly improved if the scheme supplies its unused energy to the timber industries.

It is noted that Case-1 (run-of-river development as a base power plant) remains to be more beneficial than Case-2 in cases of demand scenarios (a) and (b). However, Case-2 turns to be attractive in demand scenario (c).

5. Further Surveys

Following will be subjects of further survey during the feasibility study.

(a) Inquiry to timber companies as to their interest for using power generated from Mukoh

(b) Schedule of road connection to the Kapit area, since availability of road transportation would be one of the factors of inviting timber processing industries in the area

(c) Confirmation of the preliminary study made in this Note.

Table-1 SALIENT FEATURES OF MUKOH DEVELOPMENT
(TWO ALTERNATIVE PLANS)

Demand Scenario: Kapit + Timber Industries

Description		Case-1	Case-2
Type of development		ROR	ROR with a pondage
Firm discharge	(m^3/s)	7.4	7.4
Plant discharge	(m^3/s)	7.4	14.8
Effective head	(m)	31.5	36.1
Full supply level	(m)	80.0	87.2
Min. operating level	(m)	-	80.7
Average operating level	(m)	80.0	85.0
Tailwater level	(m)	45.0	45.0
Dam/weir height		5	15.2
Headrace, length	(m)	1,660	1,660
diameter	(m)	2.0	2.7
Penstock, length	(m)	40	40
diameter	(m)	1.5	2.2
Installed capacity	(MW)	1.94	4.45
Dependable output	(MW)	1.94	4.45
Annual energy	(GWh)		
- Primary		16.7	19.1
- Secondary		0	17.5
Total		16.7	36.6
Transmission line			
- Length	(km)	25	25
- Voltage (kV) x circuit		33 x 1	33 x 1
Construction cost	(M$ mill)	21.3	37.1

Table 2 EVALUATION INDICES

Description		Case-1	Case-2
Power :			
Installed capacity	(MW)	1.94	4.45
Dependable output	(MW)	1.94	4.45
Annual energy	(GWh)	16.7	36.6
Evaluation Indices :			
kWh cost*	(M¢/kWh)	16.1	12.8
(a) Demand scenario : 0.5 MW + 0.1 MW x 5 years			
- Net present value**	(M$ mill)	+3.15	+1.38
- B/C**		1.12	1.04
- EIRR	(%)	12.5	10.6
(b) Demand scenario : 1 MW + 0.2 MW x 5 years			
- Net present value**	(M$ mill)	+3.96	+4.69
- B/C**		1.11	1.13
- EIRR	(%)	13.2	12.0
(c) Demand scenario : 6.6 MW in 1994			
- Net present value**	(M$ mill)	6.35	+11.99
- B/C**		1.07	1.15
- EIRR	(%)	15.7	15.8

Note : * On the basis that all energy is consumed
** At the discount rate of 10% per annum

TABLE 3 (1) EVALUATION OF PROJECT - CASH FLOW SCHEME (1/2)

System : Kapit Project : Mukoh 1.9 MW Case : (1/2)

Case (a) (Extra demand from saw mills 0.5 MW + 0.1 MW x 5)

Description	Unit	1986	87	88	89	1990	91	92	93	94	95	96	97	98	99
1. Demand, peak power (MW)	MW	1.27	1.34	1.40	1.47	1.55	1.63	1.71	1.80	2.39	2.58	2.78	2.98	3.19	3.40
2. Demand, energy (GWh)	GWh	5.6	5.9	6.1	6.4	6.8	7.1	7.5	7.9	10.5	11.3	12.2	13.1	14.0	14.9
3. Annual load factor	%	50.0	50.0	50.0	50.0	50.0	50.0	50.0	50.0	50.0	50.0	50.0	50.0	50.0	50.0
4. Reserve capacity	MW	0.6	0.6	0.6	0.6	0.6	0.6	0.6	0.6	1.0	1.0	1.0	1.0	1.0	1.0
5. Required total capacity	MW	1.87	1.94	2.0	2.07	2.15	2.23	2.31	2.40	3.39	3.58	3.78	3.98	4.19	4.40
6. Diesel retirement	MW		-0.075	-0.288							-0.2	-0.2	-0.2	-0.2	
7. Power addition, hydro	MW									0.97	0.97				
,diesel	MW		+0.3		+0.4									1.0	
8. System capacity		2.36	2.59	2.3	2.7	2.7	2.7	2.7	2.7	3.7	4.4	4.2	4.0	4.8	4.8
(H.S.D units)		(2.36)	(2.3)	(2.0)	(2.0)	(2.0)	(2.0)	(2.0)	(2.0)	(2.0)	(1.8)	(1.6)	(1.4)	(1.2)	(1.2)
(L.O units)		(0)	(0.3)	(0.3)	(0.7)	(0.7)	(0.7)	(0.7)	(0.7)	(0.7)	(0.7)	(0.7)	(0.7)	(1.7)	(1.7)
9. Installation cost, hydro	M$ x mil.						3.78	9.45	6.27	1.80					
,diesel	"	0.96	0.32	0.96								0.80	2.40		1.60
10. Power generation, hydro	GWh									7.9	10.7	11.4	11.9	12.5	12.9
,diesel	GWh	5.6	5.9	6.1	6.4	6.8	7.1	7.5	7.9	2.6	0.6	0.8	1.2	1.5	2.0
11. Hydro OM cost	M$ x mil.									0.15	0.17	0.17	0.17	0.17	0.17
12. Diesel OM cost, fixed	M$ x mil.	0.23	0.25	0.22	0.26	0.26	0.26	0.26	0.26	0.26	0.24	0.22	0.20	0.28	0.28
variable	M$ x mil.	0.03	0.03	0.03	0.03	0.04	0.04	0.04	0.04	0.01	0	0	0.01	0.01	0.01
fuel (HSD)	M$ x mil.	1.11	1.04	1.07	1.94	1.13	1.04	1.10	1.17	0.38	0.09	0.01	0.06	0.12	0.16
fuel (LO)		0	0.09	0.09	0.22	0.23	0.24	0.26	0.27	0.09	0.02	0.03	0.05	0.12	0.16
13. Total cost (hydro + diesel)	M$ x mil.	2.33	1.73	2.39	1.45	1.66	5.36	11.11	8.01	2.69	0.52	1.23	2.89	0.7	2.38
(all diesel)	M$ x mil.														

Present Worth (M$ x million): Discount rate (%) All diesel (B) Rate of Return %
Hydro + diesel (A) Net present value (A-B)

TABLE 3 (2) EVALUATION OF PROJECT - CASH FLOW SCHEME (2/2)

System : Kapit Project : Mukoh 1.9 MW Case : (2/2)

Case (a) (Extra Demand from saw mills 0.5 MW + 0.1 MW x 5)

Description	Unit	2000	01	02	03	04	2005	06	07	08	09	2010	2011-33	2033
1. Demand, peak power (MW)	MW	3.52	3.65	3.78	3.92	4.06	4.21	4.38	4.55	4.73	4.91	5.11	9.39	13.66
2. Demand, energy (GWh)	GWh	15.4	16.0	16.6	17.2	17.8	18.4	19.2	19.9	20.7	21.5	22.4	41.1	59.8
3. Annual load factor	%	50.0	50.0	50.0	50.0	50.0	50.0	50.0	50.0	50.0	50.0	50.0	50.0	50.0
4. Reserve capacity	MW	1.0	1.0	1.0	1.0	1.0	1.0	1.0	1.0	1.0	1.0	1.0	1.9	2.7
5. Required total capacity	MW	4.52	4.65	4.78	4.92	5.06	5.21	5.38	5.55	5.73	5.91	6.11	11.29	16.36
6. Diesel retirement	MW		-1.2		-0.3		-0.4							
7. Power addition, hydro														
,diesel	MW		2.0				1.0				1.0			
8. System capacity	MW	4.8	5.6	5.6	5.3	5.3	5.9	5.9	5.9	5.9	6.9	6.9	11.3	
(H.S.D Units)	MW	(1,2)	(0)	(0)	(0)	(0)	(0)	(0)	(0)	(0)	(0)	(0)	(0)	
(L.O units)	MW	(1.7)	(3.7)	(3.7)	(3.4)	(3.4)	(4.0)	(4.0)	(4.0)	(4.0)	(5.0)	(5.0)	(9.4)	
9. Installation cost, hydro	M$ x mil.													
,diesel	"	4.8			0.8	2.4			0.8	2.4				
10. Power generation, hydro	GWh	13.2	13.6	13.8	14.1	14.4	14.7	15.0	15.3	15.6	15.8	16.1	16.7	
,diesel	GWh	2.2	2.4	2.8	3.1	3.4	3.7	4.2	4.6	5.1	5.7	6.3	24.4	
11. Hydro OM cost	M$ x mil.	0.17	0.17	0.17	0.17	0.17	0.17	0.17	0.17	0.17	0.17	0.17	0.17	
12. Diesel OM cost, fixed	M$ x mil.	0.28	0.36	0.36	0.33	0.33	0.38	0.38	0.38	0.38	0.48	0.48	0.90	
variable	M$ x mil.	0.01	0.01	0.01	0.02	0.02	0.02	0.02	0.02	0.03	0.03	0.03	0.13	
fuel (HSD)	M$ x mil.	0.18	0	0	0	0	0	0	0	0	0	0	0	
fuel (LO)	M$ x mil.	0.17	0.32	0.37	0.41	0.45	0.49	0.56	0.61	0.67	0.75	0.83	3.23	
13. Total cost (hydro + diesel)	M$ x mil.	5.61	0.86	0.91	1.73	3.37	1.06	1.13	1.98	3.65	1.43	1.51	4.43	
(all diesel)	M$ x mil.													

Present Worth (M$ x million): Discount rate (%) All diesel (B) Rate of Return %

Hydro + diesel (A) Net present value (A-B)

TABLE 4 (1) EVALUATION OF PROJECT - CASH FLOW SCHEME (1/2)

System : Kapit Project : Mukoh 4.5 MW Case : (1/2)

Case (a) (Extra demand from saw mills 0.5 MW + 0.1 MW x 5)

Description	Unit	1986	87	88	89	1990	91	92	93	94	95	96	97	98	99
1. Demand, peak power (MW)	MW	1.27	1.34	1.40	1.47	1.55	1.63	1.71	1.80	2.39	2.58	2.78	2.98	3.19	3.40
2. Demand, energy (GWh)	GWh	5.6	5.9	6.1	6.4	6.8	7.1	7.5	7.9	10.5	11.3	12.2	13.1	14.0	14.9
3. Annual load factor	%	50.0	50.0	50.0	50.0	50.0	50.0	50.0	50.0	50.0	50.0	50.0	50.0	50.0	50.0
4. Reserve capacity	MW	0.6	0.6	0.6	0.6	0.6	0.6	0.6	0.6	1.0	1.0	1.0	1.0	1.0	1.0
5. Required total capacity	MW	1.87	1.94	2.0	2.07	2.15	2.23	2.31	2.40	3.39	3.58	3.78	3.98	4.19	4.40
6. Diesel retirement	MW		-0.075	-0.288							-0.2	-0.2	-0.2	-0.2	
7. Power addition, hydro	MW									2.23				2.23	
,diesel	MW		+0.3		+0.4										
8. System capacity		2.36	2.59	2.3	2.7	2.7	2.7	2.7	2.7	4.9	4.7	4.5	4.3	6.4	6.4
(H.S.D units)		2.36	2.3	2.0	2.0	2.0	2.0	2.0	2.0	(2.0)	(1.8)	(1.6)	(1.4)	(1.2)	(1.2)
(L.O units)			0.3	0.3	0.7	0.7	0.7	0.7	0.7	(0.7)	(0.7)	(0.7)	(0.7)	(0.7)	(0.7)
9. Installation cost, hydro	M$ x mil.						7.43	17.67	8.14			0.90	3.00		
,diesel	"	0.96	0.32	0.96											
10. Power generation, hydro	GWh									10.3	11.0	11.7	12.4	13.7	14.7
,diesel	GWh	5.6	5.9	6.1	6.4	6.8	7.1	7.5	7.9	0.2	0.3	0.5	0.7	0.1	0.2
11. Hydro OM cost	M$ x mil.									0.26	0.26	0.26	0.26	0.29	0.29
12. Diesel OM cost, fixed	M$ x mil.	0.23	0.25	0.22	0.26	0.26	0.26	0.26	0.26	0.26	0.24	0.22	0.20	0.18	0.18
variable	M$ x mil.	0.03	0.03	0.03	0.03	0.04	0.04	0.04	0.04	0	0	0	0	0	0
fuel (HSD)	M$ x mil.	1.11	1.04	1.07	1.94	1.13	1.04	1.10	1.17	0.03	0.04	0.07	0.09	0.01	0.03
fuel (LO)		0	0.09	0.09	0.22	0.23	0.24	0.26	0.27	0.01	0.01	0.02	0.03	0	0.01
13. Total cost (hydro + diesel)	M$ x mil.	2.33	1.73	2.39	1.45	1.66	9.01	19.33	9.88	0.56	0.55	0.57	0.58	0.48	0.51
(all diesel)	M$ x mil.														

Present Worth (M$ x million): Discount rate (%) All diesel (B) Rate of Return %
Hydro + diesel (A) Net present value (A-B)

TABLE 4 (2) EVALUATION OF PROJECT - CASH FLOW SCHEME (2/2)

System : Kapit Project : Mukoh 4.5 MW Case : (2/2)

Case (a) (Extra Demand from saw mills 0.5 MW + 0.1 MW x 5)

Description	Unit	2000	01	02	03	04	2005	06	07	08	09	2010	2011-33	2033
1. Demand, peak power (MW)	MW	3.52	3.65	3.78	3.92	4.06	4.21	4.38	4.55	4.73	4.91	5.11	9.39	13.66
2. Demand, energy (GWh)	GWh	15.4	16.0	16.6	17.2	17.8	18.4	19.2	19.9	20.7	21.5	22.8	41.1	59.8
3. Annual load factor	%	50.0	50.0	50.0	50.0	50.0	50.0	50.0	50.0	50.0	50.0	50.0	50.0	50.0
4. Reserve capacity	MW	1.0	1.0	1.0	1.0	1.0	1.0	1.0	1.0	1.0	1.0	1.0	1.9	2.7
5. Required total capacity	MW	4.52	4.65	4.78	4.92	5.06	5.21	5.38	5.55	5.73	5.91	6.11	11.29	16.36
6. Diesel retirement	MW		-1.2		-0.3		-0.4							
7. Power addition, hydro	MW													
,diesel	MW					1.0			1.0					
8. System capacity	MW	6.4	5.2	5.2	4.9	5.9	5.5	5.5	6.5	6.5	6.5	6.5	11.3	
(H.S.D units)		(1.2)	(0)	(0)	(0)	(0)	(0)	(0)	(0)	(0)	(0)	(0)	(0)	
(L.O units)		(0.7)	(0.7)	(0.7)	(0.4)	(1.4)	(1.0)	(1.0)	(2.0)	(2.0)	(2.0)	(2.0)	(6.8)	
9. Installation cost, hydro	M$ x mil.													
,diesel	"			0.80	2.40		0.80	2.40						
10. Power generation, hydro	GWh	15.2	15.8	16.3	16.8	17.4	18.0	18.7	19.4	20.0	20.7	21.3	31.3	
,diesel	GWh	0.2	0.2	0.3	0.4	0.4	0.4	0.5	0.5	0.7	0.8	0.9	9.8	
11. Hydro OM cost	M$ x mil.	0.29	0.29	0.29	0.29	0.29	0.29	0.29	0.29	0.29	0.29	0.29	0.29	
12. Diesel OM cost, fixed	M$ x mil.	0.18	0.07	0.07	0.04	0.13	0.10	0.10	0.19	0.19	0.19	0.29	0.65	
variable	M$ x mil.	0	0	0	0	0	0	0	0	0	0	0	0.05	
fuel (HSD)	M$ x mil.	0.03	0	0	0	0	0	0	0	0	0	0	0	
fuel (LO)	M$ x mil.	0.01	0.03	0.04	0.05	0.05	0.05	0.07	0.07	0.09	0.11	0.12	1.30	
13. Total cost (hydro + diesel)	M$ x mil.	0.51	0.39	1.2	2.78	0.47	1.24	2.86	0.55	0.57	0.59	0.70	2.29	
(all diesel)	M$ x mil.													

Present Worth (M$ x million): Discount rate (%) All diesel (B) Rate of Return %
Hydro + diesel (A) Net present value (A-B)

TABLE 5 (1) EVALUATION OF PROJECT - CASH FLOW SCHEME (1/2)

System : Kapit Project : All Diesel Program Case : (1/2)

Case (a) (Extra demand from saw mills 0.5 MW + 0.1 MW x 5)

Description	Unit	1986	87	88	89	1990	91	92	93	94	95	96	97	98	99
1. Demand, peak power (MW)	MW	1.27	1.34	1.40	1.47	1.55	1.63	1.71	1.80	2.39	2.58	2.78	2.98	3.19	3.40
2. Demand, energy (GWh)	GWh	5.6	5.9	6.1	6.4	6.8	7.1	7.5	7.9	10.5	11.3	12.2	13.1	14.0	14.9
3. Annual load factor	%	50.0	50.0	50.0	50.0	50.0	50.0	50.0	50.0	50.0	50.0	50.0	50.0	50.0	50.0
4. Reserve capacity	MW	0.6	0.6	0.6	0.6	0.6	0.6	0.6	0.6	1.0	1.0	1.0	1.0	1.0	1.0
5. Required total capacity	MW	1.87	1.94	2.0	2.07	2.15	2.23	2.31	2.40	3.39	3.58	3.78	3.98	4.19	4.40
6. Diesel retirement	MW		-0.075	-0.288							-0.2	-0.2	-0.2	-0.2	
7. Power addition, hydro	MW														
,diesel	MW		+0.3		+0.4					1.0		1.0		1.0	
8. System capacity		2.36	2.59	2.3	2.7	2.7	2.7	2.7	2.7	3.7	3.5	4.3	4.1	4.9	4.9
(H.S.D units)		(2.36)	(2.3)	(2.0)	(2.0)	(2.0)	(2.0)	(2.0)	(2.0)	(2.0)	(1.8)	(1.6)	(1.4)	(1.2)	(1.2)
(L.O units)		(0)	(0.3)	(0.3)	(0.7)	(0.7)	(0.7)	(0.7)	(0.7)	(1.7)	(1.7)	(2.7)	(2.7)	(3.7)	(3.7)
9. Installation cost, hydro	M$ x mil.														
,diesel	"	0.96	0.32	0.96				0.80	2.40	0.80	2.40	0.80	2.40		1.60
10. Power generation, hydro	GWh														
,diesel	GWh	5.6	5.9	6.1	6.4	6.8	7.1	7.5	7.9	10.5	11.3	12.2	13.1	14.0	14.9
11. Hydro OM cost	M$ x mil.														
12. Diesel OM cost, fixed	M$ x mil.	0.23	0.25	0.22	0.26	0.26	0.26	0.26	0.26	0.36	0.34	0.41	0.39	0.47	0.47
variable	M$ x mil.	0.03	0.03	0.03	0.03	0.04	0.04	0.04	0.04	0.05	0.06	0.06	0.07	0.07	0.08
fuel (HSD)	M$ x mil.	1.11	1.04	1.07	1.94	1.13	1.04	1.10	1.17	0.13	1.14	0.90	0.88	0.67	0.71
fuel (LO)		0	0.09	0.09	0.22	0.23	0.24	0.26	0.27	0.64	0.73	1.02	1.14	1.41	1.50
13. Total cost (hydro + diesel)	M$ x mil.														
(all diesel)	M$ x mil.	2.33	1.73	2.37	1.45	1.66	1.58	2.46	4.14	2.98	4.67	3.19	4.88	2.62	4.36

Present Worth (M$ x million): Discount rate (%) All diesel (B) Rate of Return %

Hydro + diesel (A) Net present value (A-B)

TABLE 5 (2) EVALUATION OF PROJECT - CASH FLOW SCHEME (2/2)

System : Kapit Project : All Diesel Program Case : (2/2)

Case (a) (Extra Demand from saw mills 0.5 MW + 0.1 MW x 5)

Description	Unit	2000	01	02	03	04	2005	06	07	08	09	2010	2011-33	2033
1. Demand, peak power (MW)	MW	3.52	3.65	3.78	3.92	4.06	4.21	4.38	4.55	4.73	4.91	5.11	9.39	13.66
2. Demand, energy (GWh)	GWh	15.4	16.0	16.6	17.2	17.8	18.4	19.2	19.9	20.7	21.5	22.4	41.1	59.8
3. Annual load factor	%	50.0	50.0	50.0	50.0	50.0	50.0	50.0	50.0	50.0	50.0	50.0	50.0	50.0
4. Reserve capacity	MW	1.0	1.0	1.0	1.0	1.0	1.0	1.0	1.0	1.0	1.0	1.0	1.9	2.7
5. Required total capacity	MW	4.52	4.65	4.78	4.92	5.06	5.21	5.38	5.55	5.73	5.91	6.11	11.29	16.36
6. Diesel retirement	MW		-1.2		-0.3		-0.4					-1.0		
7. Power addition, hydro	MW													
,diesel	MW		2.0				1.0					2.0		
8. System capacity	MW	4.9	5.7	5.7	5.4	5.4	6.0	6.0	6.0	6.0	6.0	7.0	11.3	
(H.S.D units)		(1.2)	(0)	(0)	(0)	(0)	(0)	(0)	(0)	(0)	(0)	(0)	(0)	
(L.O units)		(3.7)	(5.7)	(5.7)	(5.4)	(5.4)	(6.0)	(6.0)	(6.0)	(6.0)	(6.0)	(7.0)	(11.3)	
9. Installation cost, hydro	M$ x mil.													
,diesel	"	4.80			0.80	2.40				1.60	4.80			
10. Power generation, hydro	GWh													
,diesel	GWh	15.4	16.0	16.6	17.2	17.8	18.4	19.2	19.9	20.7	21.5	22.4	41.8	
11. Hydro OM cost	M$ x mil.													
12. Diesel OM cost, fixed	M$ x mil.	0.47	0.55	0.55	0.52	0.52	0.58	0.58	0.58	0.58	0.58	0.67	1.08	
variable	M$ x mil.	0.08	0.08	0.09	0.09	0.09	0.10	0.10	0.10	0.11	0.11	0.12	0.22	
fuel (HSD)	M$ x mil.	0.73	0	0	0	0	0	0	0	0	0	0	0	
fuel (LO)	M$ x mil.	1.55	2.12	2.20	2.28	2.35	2.43	2.54	2.63	2.74	2.84	2.96	5.53	
13. Total cost (hydro + diesel)	M$ x mil.													
(all diesel)	M$ x mil.	7.63	2.75	2.84	3.69	5.36	3.11	3.22	3.31	5.03	8.33	3.75	6.83	

Present Worth (M$ x million): Discount rate (%) All diesel (B) Rate of Return %

Hydro + diesel (A) Net present value (A-B)

TABLE 6 (1) EVALUATION OF PROJECT - CASH FLOW SCHEME (1/2)

System : Kapit Project : Mukoh 1.9 MW Case : (1/2)

Case (b) (Extra demand from saw mills 1 MW + 0.2 MW x 5)

Description	Unit	1986	87	88	89	1990	91	92	93	94	95	96	97	98	99
1. Demand, peak power (MW)	MW	1.27	1.34	1.40	1.47	1.55	1.63	1.71	1.80	2.89	3.18	3.48	3.78	4.09	4.40
2. Demand, energy (GWh)	GWh	5.6	5.9	6.1	6.4	6.8	7.1	7.5	7.9	12.7	13.9	15.2	16.6	17.9	19.3
3. Annual load factor	%	50.0	50.0	50.0	50.0	50.0	50.0	50.0	50.0	50.0	50.0	50.0	50.0	50.0	50.0
4. Reserve capacity	MW	0.6	0.6	0.6	0.6	0.6	0.6	0.6	0.6	1.0	1.0	1.0	1.0	1.0	1.0
5. Required total capacity	MW	1.87	1.94	2.00	2.07	2.15	2.23	2.31	2.40	3.89	4.18	4.48	4.78	5.09	5.40
6. Diesel retirement	MW		-0.075	-0.288							-0.2	-0.2	-0.2	-0.2	
7. Power addition, hydro	MW									1.94					
,diesel	MW		+0.3		+0.4							1.0		1.0	
8. System capacity		2.36	2.59	2.3	2.7	2.7	2.7	2.7	2.7	4.6	4.4	5.2	5.0	5.8	5.8
(H.S.D units)		(2.36)	(2.3)	(2.0)	(2.0)	(2.0)	(2.0)	(2.0)	(2.0)	(2.0)	(1.8)	(1.6)	(1.4)	(1.2)	(1.2)
(L.O units)		(0)	(0.3)	(0.3)	(0.7)	(0.7)	(0.7)	(0.7)	(0.7)	(0.7)	(0.7)	(1.7)	(1.7)	(2.7)	(2.7)
9. Installation cost, hydro	M$ x mil.						3.78	10.05	7.47						
,diesel	"	0.96	0.32	0.96						0.80	2.40	0.80	2.40		1.60
10. Power generation, hydro	GWh									11.0	12.4	13.1	13.8	14.5	15.0
,diesel	GWh	5.6	5.9	6.1	6.4	6.8	7.1	7.5	7.9	1.1	1.5	2.1	2.8	3.4	4.3
11. Hydro OM cost	M$ x mil.									0.17	0.17	0.17	0.17	0.17	0.17
12. Diesel OM cost, fixed	M$ x mil.	0.23	0.25	0.22	0.26	0.26	0.26	0.26	0.26	0.26	0.24	0.31	0.29	0.37	0.37
variable	M$ x mil.	0.03	0.03	0.03	0.03	0.04	0.04	0.04	0.04	0.01	0.01	0.01	0.01	0.02	0.02
fuel (HSD)	M$ x mil.	1.11	1.04	1.07	0.94	1.13	1.04	1.10	1.17	0.16	0.21	0.20	0.25	0.21	0.26
fuel (LO)		0	0.09	0.09	0.22	0.23	0.24	0.26	0.27	0.04	0.06	0.14	0.20	0.31	0.39
13. Total cost (hydro + diesel)	M$ x mil.	2.33	1.73	2.37	1.45	1.76	5.46	11.81	8.31	1.44	3.09	1.63	3.32	1.08	2.81
(all diesel)	M$ x mil.														

Present Worth (M$ x million): Discount rate (%) All diesel (B) Rate of Return %

Hydro + diesel (A) Net present value (A-B)

TABLE 6 (2) EVALUATION OF PROJECT - CASH FLOW SCHEME (2/2)

System : Kapit Project : Mukoh 1.9 MW Case : (2/2)

Case (b) (Extra Demand from saw mills 1 MW + 0.2 MW x 5)

Description	Unit	2000	01	02	03	04	2005	06	07	08	09	2010	2011-33	2033
1. Demand, peak power (MW)	MW	4.52	4.65	4.78	4.92	5.06	5.21	5.38	5.55	5.73	5.91	6.11	10.39	14.66
2. Demand, energy (GWh)	GWh	19.8	20.4	20.9	21.5	22.2	22.8	23.6	24.3	25.1	25.9	26.8	45.5	64.2
3. Annual load factor	%	50.0	50.0	50.0	50.0	50.0	50.0	50.0	50.0	50.0	50.0	50.0	50.0	50.0
4. Reserve capacity	MW	1.0	1.0	1.0	1.0	1.0	1.0	1.1	1.1	1.1	1.2	1.2	2.1	2.9
5. Required total capacity	MW	5.52	5.65	5.98	5.92	6.06	6.21	6.38	6.55	6.73	6.91	7.11	12.49	17.56
6. Diesel retirement	MW		-1.2		-0.3		-0.4							
7. Power addition, hydro	MW													
,diesel	MW		2.0				1.0					1.0		
8. System capacity	MW	5.8	6.6	6.6	6.3	6.3	6.9	6.9	6.9	6.9	6.9	7.9	12.5	
(H.S.D units)		(1.2)	(0)	(0)	(0)	(0)	(0)	(0)	(0)	(0)	(0)	(0)	(0)	
(L.O units)		(2.7)	(4.7)	(4.7)	(4.4)	(4.4)	(5.0)	(5.0)	(5.0)	(5.0)	(5.0)	(6.0)	(10.6)	
9. Installation cost, hydro	M$ x mil.													
,diesel	"	4.80			0.80	2.40				0.80	2.40			
10. Power generation, hydro	GWh	15.1	15.3	15.5	15.7	15.8	16.0	16.2	16.4	16.6	16.7	16.7	16.7	
,diesel	GWh	4.7	5.1	5.4	5.8	6.4	6.8	7.4	7.9	8.5	9.2	10.1	28.8	
11. Hydro OM cost	M$ x mil.	0.17	0.17	0.17	0.17	0.17	0.17	0.17	0.17	0.17	0.17	0.17	0.17	
12. Diesel OM cost, fixed	M$ x mil.	0.37	0.45	0.45	0.42	0.42	0.48	0.48	0.48	0.48	0.48	0.57	1.01	
variable	M$ x mil.	0.02	0.03	0.03	0.03	0.03	0.04	0.04	0.04	0.04	0.05	0.05	0.15	
fuel (HSD)	M$ x mil.	0.29	0	0	0	0	0	0	0	0	0	0	0	
fuel (LO)	M$ x mil.	0.43	0.67	0.71	0.77	0.85	0.90	0.98	1.05	1.12	1.22	1.34	3.81	
13. Total cost (hydro + diesel)	M$ x mil.	6.08	1.32	1.36	2.19	3.87	1.59	1.67	1.74	2.61	4.32	2.13	5.14	
(all diesel)	M$ x mil.													

Present Worth (M$ x million): Discount rate (%) All diesel (B) Rate of Return %

Hydro + diesel (A) Net present value (A-B)

TABLE 7 (1) EVALUATION OF PROJECT - CASH FLOW SCHEME (1/2)

System : Kapit Project : Mukoh 4.5 MW Case : (1/2)

Case (a) (Extra demand from saw mills 1 MW + 0.2 MW x 5)

Description	Unit	1986	87	88	89	1990	91	92	93	94	95	96	97	98	99
1. Demand, peak power (MW)	MW	1.27	1.34	1.40	1.47	1.55	1.63	1.71	1.80	2.89	3.18	3.48	3.78	4.09	4.40
2. Demand, energy (GWh)	GWh	5.6	5.9	6.1	6.4	6.8	7.1	7.5	7.9	12.7	13.9	15.2	16.6	17.9	19.3
3. Annual load factor	%	50.0	50.0	50.0	50.0	50.0	50.0	50.0	50.0	50.0	50.0	50.0	50.0	50.0	50.0
4. Reserve capacity	MW	0.6	0.6	0.6	0.6	0.6	0.6	0.6	0.6	1.0	1.0	1.0	1.0	1.0	1.0
5. Required total capacity	MW	1.87	1.94	2.00	2.07	2.15	2.23	2.31	2.40	3.89	4.18	4.48	4.78	5.09	5.40
6. Diesel retirement	MW		-0.075	-0.288							-0.2	-0.2	-0.2	-0.2	
7. Power addition, hydro	MW									2.23			2.23		
,diesel	MW		+0.3		+0.4										
8. System capacity		2.36	2.59	2.3	2.7	2.7	2.7	2.7	2.7	4.9	4.7	4.5	6.6	6.4	6.4
(H.S.D units)		(2.36)	(2.3)	(2.0)	(2.0)	(2.0)	(2.0)	(2.0)	(2.0)	(2.0)	(1.8)	(1.6)	(1.4)	(1.2)	(1.2)
(L.O units)		(0)	(0.3)	(0.3)	(0.7)	(0.7)	(0.7)	(0.7)	(0.7)	(0.7)	(0.7)	(0.7)	(0.7)	(0.7)	(0.7)
9. Installation cost, hydro	M$ x mil.						7.43	17.67	8.14		0.90	3.0			
,diesel	"	0.96	0.32	0.96											0.80
10. Power generation, hydro	GWh									12.1	13.0	13.8	16.3	17.6	18.7
,diesel	GWh	5.6	5.9	6.1	6.4	6.8	7.1	7.5	7.9	0.6	0.9	1.4	0.3	0.3	0.6
11. Hydro OM cost	M$ x mil.									0.26	0.26	0.26	0.29	0.29	0.29
12. Diesel OM cost, fixed	M$ x mil.	0.23	0.25	0.22	0.26	0.26	0.26	0.26	0.26	0.26	0.24	0.22	0.20	0.18	0.18
variable	M$ x mil.	0.03	0.03	0.03	0.03	0.04	0.04	0.04	0.04	0	0	0.01	0	0	0
fuel (HSD)	M$ x mil.	1.11	1.04	1.07	0.94	1.13	1.04	1.10	0.17	0.09	0.13	0.19	0.04	0.04	0.08
fuel (LO)		0	0.09	0.09	0.22	0.23	0.24	0.26	0.27	0.02	0.09	0.06	0.01	0.01	0.03
13. Total cost (hydro + diesel)	M$ x mil.	2.33	1.73	2.37	1.45	1.66	9.01	19.33	8.88	0.63	1.62	3.74	0.54	0.52	1.38
(all diesel)	M$ x mil.														

Present Worth (M$ x million): Discount rate (%) All diesel (B) Rate of Return %

Hydro + diesel (A) Net present value (A-B)

TABLE 7 (2) EVALUATION OF PROJECT - CASH FLOW SCHEME (2/2)

System : Kapit Project : Mukoh 4.5 MW Case : (2/2)

Case (b) (Extra Demand from saw mills 1 MW + 0.2 MW x 5)

Description	Unit	2000	01	02	03	04	2005	06	07	08	09	2010	2011-33	2033
1. Demand, peak power (MW)	MW	4.52	4.65	4.78	4.92	5.06	5.21	5.38	5.55	5.73	5.91	6.11	10.39	14.66
2. Demand, energy (GWh)	GWh	19.8	20.4	20.9	21.5	22.2	22.8	23.6	24.3	25.1	25.9	26.8	45.5	64.2
3. Annual load factor	%	50.0	50.0	50.0	50.0	50.0	50.0	50.0	50.0	50.0	50.0	50.0	50.0	50.0
4. Reserve capacity	MW	1.0	1.0	1.0	1.0	1.0	1.0	1.1	1.1	1.1	1.2	1.2	2.1	2.9
5. Required total capacity	MW	5.52	5.65	5.78	5.92	6.06	6.21	6.38	6.55	6.73	6.91	7.11	12.49	17.56
6. Diesel retirement	MW		-1.2		-0.3		-0.4							
7. Power addition, hydro	MW													
,diesel	MW		1.0			1.0				1.0				
8. System capacity	MW	6.4	6.2	6.2	5.9	6.9	6.5	6.5	6.5	7.5	7.5	7.5	12.5	
(H.S.D units)		(1.2)	(0)	(0)	(0)	(0)	(0)	(0)	(0)	(0)	(0)	(0)	(0)	
(L.O units)		(0.7)	(1.7)	(1.7)	(1.4)	(2.4)	(2.0)	(2.0)	(2.0)	(3.0)	(3.0)	(3.0)	(8.0)	
9. Installation cost, hydro	M$ x mil.													
,diesel	"	2.40		0.80	2.40			0.80	2.40					
10. Power generation, hydro	GWh	19.3	19.7	20.2	20.7	21.1	21.6	22.2	22.7	23.2	23.8	24.2	32.8	
,diesel	GWh	0.5	0.7	0.7	0.8	1.1	1.2	1.4	1.6	1.9	2.1	2.6	12.7	
11. Hydro OM cost	M$ x mil.	0.29	0.29	0.29	0.29	0.29	0.29	0.29	0.29	0.29	0.29	0.29	0.29	
12. Diesel OM cost, fixed	M$ x mil.	0.18	0.16	0.16	0.13	0.23	0.19	0.19	0.19	0.29	0.29	0.29	0.77	
variable	M$ x mil.	0	0	0	0	0.01	0.01	0.01	0.01	0.01	0.01	0.01	0.07	
fuel (HSD)	M$ x mil.	0.06	0	0	0	0	0	0	0	0	0	0	0	
fuel (LO)	M$ x mil.	0.02	0.09	0.09	0.10	0.15	0.16	0.18	0.21	0.25	0.28	0.34	1.68	
13. Total cost (hydro + diesel)	M$ x mil.	2.95	0.54	1.34	2.92	0.68	0.65	1.47	3.10	0.84	0.87	0.93	2.81	
(all diesel)	M$ x mil.													

Present Worth (M$ x million): Discount rate (%) All diesel (B) Rate of Return %

Hydro + diesel (A) Net present value (A-B)

TABLE 8 (1) EVALUATION OF PROJECT - CASH FLOW SCHEME (1/2)

System : Kapit Project : All Diesel Program Case : (1/2)

Case (b) (Extra demand from saw mills 1 MW + 0.2 MW x 5)

Description	Unit	1986	87	88	89	1990	91	92	93	94	95	96	97	98	99
1. Demand, peak power (MW)	MW	1.27	1.34	1.40	1.47	1.55	1.63	1.71	1.80	2.89	3.18	3.48	3.78	4.09	4.40
2. Demand, energy (GWh)	GWh	5.6	5.9	6.1	6.4	6.8	7.1	7.5	7.9	12.7	13.9	15.2	16.6	17.9	19.3
3. Annual load factor	%	50.0	50.0	50.0	50.0	50.0	50.0	50.0	50.0	50.0	50.0	50.0	50.0	50.0	50.0
4. Reserve capacity	MW	0.6	0.6	0.6	0.6	0.6	0.6	0.6	0.6	1.0	1.0	1.0	1.0	1.0	1.0
5. Required total capacity	MW	1.87	1.94	2.00	2.07	2.15	2.23	2.31	2.40	3.89	4.18	4.48	4.78	5.09	5.40
6. Diesel retirement	MW		-0.075	-0.288							-0.2	-0.2	-0.2	-0.2	
7. Power addition, hydro	MW														
,diesel	MW		+0.3		+0.4					2.0		1.0		1.0	
8. System capacity		2.36	2.59	2.3	2.7	2.7	2.7	2.7	2.7	4.7	4.5	5.3	5.1	5.9	5.9
(H.S.D units)		(2.36)	(2.3)	(2.0)	(2.0)	(2.0)	(2.0)	(2.0)	(2.0)	(2.0)	(1.8)	(1.6)	(1.4)	(1.2)	(1.2)
(L.O units)		(0)	(0.3)	(0.3)	(0.7)	(0.7)	(0.7)	(0.7)	(0.7)	(2.7)	(2.7)	(3.7)	(3.7)	(4.7)	(4.7)
9. Installation cost, hydro	M$ x mil.														
,diesel	"	0.96	0.32	0.96				1.60	4.80	0.80	1.60	0.80	1.60		1.60
10. Power generation, hydro	GWh														
,diesel	GWh	5.6	5.9	6.1	6.4	6.8	7.1	7.5	7.9	12.7	13.9	15.2	16.6	17.9	19.3
11. Hydro OM cost	M$ x mil.														
12. Diesel OM cost, fixed	M$ x mil.	0.23	0.25	0.22	0.26	0.26	0.26	0.26	0.26	0.45	0.43	0.51	0.49	0.57	0.57
variable	M$ x mil.	0.03	0.03	0.03	0.03	0.04	0.04	0.04	0.04	0.07	0.07	0.08	0.09	0.09	0.10
fuel (HSD)	M$ x mil.	1.11	1.04	1.07	0.94	1.13	1.04	1.10	0.17	1.11	1.10	0.90	0.89	0.71	0.77
fuel (LO)		0	0.09	0.09	0.22	0.23	0.24	0.26	0.27	0.94	1.10	1.41	1.60	1.08	2.04
13. Total cost (hydro + diesel)	M$ x mil.														
(all diesel)	M$ x mil.	2.33	1.73	2.37	1.45	1.66	1.58	3.06	5.54	3.37	4.30	3.70	4.67	3.26	5.08

Present Worth (M$ x million): Discount rate (%) All diesel (B) Rate of Return %
Hydro + diesel (A) Net present value (A-B)

TABLE 8 (2) EVALUATION OF PROJECT - CASH FLOW SCHEME (2/2)

System : Kapit Project : All Diesel Program Case : (2/2)

Case (b) (Extra Demand from saw mills 1 MW + 0.2 MW x 5)

Description	Unit	2000	01	02	03	04	2005	06	07	08	09	2010	2011-33	2033
1. Demand, peak power (MW)	MW	4.52	4.65	4.78	4.92	5.06	5.21	5.38	5.55	5.73	5.91	6.11	10.39	14.66
2. Demand, energy (GWh)	GWh	19.8	20.4	20.9	21.5	22.2	22.8	23.6	24.3	25.1	25.9	26.8	45.5	64.2
3. Annual load factor	%	50.0	50.0	50.0	50.0	50.0	50.0	50.0	50.0	50.0	50.0	50.0	50.0	50.0
4. Reserve capacity	MW	1.0	1.0	1.0	1.0	1.0	1.0	1.1	1.1	1.1	1.2	1.2	2.1	2.9
5. Required total capacity	MW	5.52	5.65	5.78	5.92	6.06	6.21	6.38	6.55	6.73	6.91	7.11	12.49	17.56
6. Diesel retirement	MW		-1.2		-0.3		-0.4					-2.0		
7. Power addition, hydro	MW													
,diesel	MW		2.0				1.0					3.0		
8. System capacity	MW	5.9	6.7	6.7	6.4	6.4	7.0	7.0	7.0	7.0	7.0	8.1	12.5	
(H.S.D units)		(1.2)	(0)	(0)	(0)	(0)	(0)	(0)	(0)	(0)	(0)	(0)	(0)	
(L.O units)		(4.7)	(6.7)	(6.7)	(6.4)	(6.4)	(7.0)	(7.0)	(7.0)	(7.0)	(7.0)	(8.1)	(12.5)	
9. Installation cost, hydro	M$ x mil.													
,diesel	"	4.80			0.80	2.40				2.40	7.20			
10. Power generation, hydro	GWh													
,diesel	GWh	19.8	20.4	20.9	21.5	22.2	22.8	23.6	24.3	25.1	25.9	26.8	45.5	
11. Hydro OM cost	M$ x mil.													
12. Diesel OM cost,fixed	M$ x mil.	0.57	0.64	0.64	0.61	0.61	0.67	0.67	0.67	0.67	0.67	0.78	1.20	
variable	M$ x mil.	0.10	0.11	0.11	0.11	0.12	0.12	0.12	0.13	0.13	0.13	0.14	0.24	
fuel (HSD)	M$ x mil.	0.79	0	0	0	0	0	0	0	0	0	0	0	
fuel (LO)	M$ x mil.	2.10	2.70	2.76	2.84	2.94	3.02	3.12	3.21	3.32	3.43	3.55	6.02	
13. Total cost (hydro + diesel)	M$ x mil.													
(all diesel)	M$ x mil.	8.36	3.45	3.51	4.36	6.07	3.80	3.90	4.01	6.52	11.43	4.47	7.46	

Present Worth (M$ x million): Discount rate (%) All diesel (B) Rate of Return %

Hydro + diesel (A) Net present value (A-B)

TABLE 9 (1) EVALUATION OF PROJECT - CASH FLOW SCHEME (1/2)

System : Kapit Project : Mukoh 1.9 MW Case : (1/2)

Case (c) All hydro primary energy salable in 1994

Description	Unit	1986	87	88	89	1990	91	92	93	94	95	96	97	98	99
1. Demand, peak power (MW)	MW	1.27	1.34	1.40	1.47	1.55	1.63	1.71	1.80	6.6	6.9	7.3	7.6	8.0	8.4
2. Demand, energy (GWh)	GWh	5.6	5.9	6.1	6.4	6.8	7.1	7.5	7.9	28.9	30.2	32.0	33.3	35.0	36.8
3. Annual load factor	%	50.0	50.0	50.0	50.0	50.0	50.0	50.0	50.0	50.0	50.0	50.0	50.0	50.0	50.0
4. Reserve capacity	MW	0.6	0.6	0.6	0.6	0.6	0.6	0.6	0.6	1.3	1.4	1.5	1.5	1.6	1.7
5. Required total capacity	MW	1.87	1.94	2.0	2.07	2.15	2.23	2.31	2.40	7.9	8.3	8.8	9.1	9.6	10.1
6. Diesel retirement	MW		-0.075	-0.288							-0.2	-0.2	-0.2	-0.2	
7. Power addition, hydro	MW									1.94					
,diesel	MW		+0.3		+0.4					4.0		1.0		2.0	
8. System capacity		2.36	2.59	2.3	2.7	2.7	2.7	2.7	2.7	8.6	8.4	9.2	9.0	10.8	10.8
(H.S.D units)		(2.36)	(2.3)	(2.0)	(2.0)	(2.0)	(2.0)	(2.0)	(2.0)	(2.0)	(1.8)	(1.6)	(1.4)	(1.2)	(1.2)
(L.O units)		(0)	(0.3)	(0.3)	(0.7)	(0.7)	(0.7)	(0.7)	(0.7)	(4.7)	(4.7)	(5.7)	(5.7)	(7.7)	(7.7)
9. Installation cost, hydro	M$ x mil.						3.78	10.05	7.47						
,diesel	"	0.96	0.32	0.96				3.20	9.60	0.80	2.40	1.60	4.80		2.40
10. Power generation, hydro	GWh									16.7	16.7	16.7	16.7	16.7	16.7
,diesel	GWh	5.6	5.9	6.1	6.4	6.8	7.1	7.5	7.9	12.2	13.5	15.3	16.6	18.3	20.1
11. Hydro OM cost	M$ x mil.									0.17	0.17	0.17	0.17	0.17	0.17
12. Diesel OM cost, fixed	M$ x mil.	0.23	0.25	0.22	0.26	0.26	0.26	0.26	0.26	0.64	0.62	0.70	0.68	0.85	0.85
variable	M$ x mil.	0.03	0.03	0.03	0.03	0.04	0.04	0.04	0.04	0.06	0.07	0.08	0.08	1.00	0.10
fuel (HSD)	M$ x mil.	1.11	1.04	1.07	0.94	1.13	1.04	1.10	1.17	0.73	0.75	0.67	0.66	0.47	0.52
fuel (LO)		0	0.09	0.09	0.22	0.23	0.24	0.26	0.27	1.13	1.29	1.58	1.76	2.11	2.31
13. Total cost (hydro + diesel)	M$ x mil.	2.33	1.73	2.37	1.45	1.66	5.36	14.91	18.81	3.53	5.30	4.80	0.15	4.60	6.35
(all diesel)	M$ x mil.														

Present Worth (M$ x million): Discount rate (%) All diesel (B) Rate of Return %
Hydro + diesel (A) Net present value (A-B)

TABLE 9 (2) EVALUATION OF PROJECT - CASH FLOW SCHEME (2/2)

System : Kapit Project : Mukoh 1.9 MW Case : (2/2)

Case (c) All hydro primary energy salable in 1994

Description	Unit	2000	01	02	03	04	2005	06	07	08	09	2010	2011-33	2033
1. Demand, peak power (MW)	MW	8.8	9.3	9.8	10.2	10.8	11.3	11.9	12.4	13.1	13.7	14.4	32.2	44.2
2. Demand, energy (GWh)	GWh	30.5	40.7	42.9	44.6	47.3	49.5	52.1	54.3	57.4	60.0	63.1	141.0	193.6
3. Annual load factor	%	50.0	50.0	50.0	50.0	50.0	50.0	50.0	50.0	50.0	50.0	50.0	50.0	50.0
4. Reserve capacity	MW	1.8	1.9	2.0	2.0	2.2	2.3	2.4	2.5	2.6	2.7	2.9	6.4	
5. Required total capacity	MW	10.6	11.2	11.8	12.2	13.0	13.6	14.3	14.9	15.7	16.4	17.3	38.6	
6. Diesel retirement	MW		-1.2		-0.3		-0.4					-4.0		
7. Power addition, hydro	MW													
,diesel	MW		3.0			2.0		1.0		2.0		5.0		
8. System capacity	MW	10.8	12.6	12.6	12.3	14.3	13.9	14.9	14.9	16.9	16.9	17.9	38.6	
(H.S.D units)		(1.2)	(0)											
(L.O units)		(7.7)	(10.7)	(10.7)	(10.4)	(12.4)	(12.0)	(13.0)	(13.0)	(15.0)	(15.0)	(16.0)	(36.7)	
9. Installation cost, hydro	M$ x mil.													
,diesel	"	7.20		1.60	4.80	0.80	2.40	1.60	4.80	4.00	12.00			
10. Power generation, hydro	GWh	16.7	16.7	16.7	16.7	16.7	16.7	16.7	16.7	16.7	16.7	16.7	16.7	
,diesel	GWh	21.8	24.0	26.2	27.9	30.6	32.8	35.4	37.6	40.7	43.3	46.4	124.3	
11. Hydro OM cost	M$ x mil.	0.17	0.17	0.17	0.17	0.17	0.17	0.17	0.17	0.17	0.17	0.17	0.17	
12. Diesel OM cost, fixed	M$ x mil.	0.85	1.03	1.03	1.00	1.19	1.15	1.25	1.25	1.44	1.44	1.54	3.52	
variable	M$ x mil.	0.11	0.12	0.14	0.15	0.16	0.17	0.18	0.20	0.21	0.23	0.24	0.65	
fuel (HSD)	M$ x mil.	0.56	0	0	0	0	0	0	0	0	0	0	0	
fuel (LO)	M$ x mil.	2.51	3.17	3.47	3.69	4.05	4.34	4.68	4.97	5.38	5.73	6.14	16.44	
13. Total cost (hydro + diesel)	M$ x mil.	11.40	4.49	6.24	9.81	6.37	8.23	7.88	11.39	11.20	19.57	8.09	20.78	
(all diesel)	M$ x mil.													

Present Worth (M$ x million): Discount rate (%) All diesel (B) Rate of Return %

Hydro + diesel (A) Net present value (A-B)

TABLE 10 (1) EVALUATION OF PROJECT - CASH FLOW SCHEME (1/2)

System : Kapit Project : Mukoh 4.5 MW Case : (1/2)

Case (c) All hydro primary energy salable in 1994

Description	Unit	1986	87	88	89	1990	91	92	93	94	95	96	97	98	99
1. Demand, peak power (MW)	MW	1.27	1.34	1.40	1.47	1.55	1.63	1.71	1.80	6.6	6.9	7.3	7.6	8.0	8.4
2. Demand, energy (GWh)	GWh	5.6	5.9	6.1	6.4	6.8	7.1	7.5	7.9	28.9	30.2	32.0	33.3	35.0	36.8
3. Annual load factor	%	50.0	50.0	50.0	50.0	50.0	50.0	50.0	50.0	50.0	50.0	50.0	50.0	50.0	50.0
4. Reserve capacity	MW	0.6	0.6	0.6	0.6	0.6	0.6	0.6	0.6	1.3	1.4	1.5	1.5	1.6	1.7
5. Required total capacity	MW	1.87	1.94	2.0	2.07	2.15	2.23	2.31	2.40	7.9	8.3	8.8	9.1	9.6	10.1
6. Diesel retirement	MW		-0.075	-0.288							-0.2	-0.2	-0.2	-0.2	
7. Power addition, hydro	MW									4.45					
,diesel	MW		+0.3		+0.4					2.0			2.0		
8. System capacity		2.36	2.59	2.3	2.7	2.7	2.7	2.7	2.7	9.2	9.0	8.8	10.6	10.4	10.4
(H.S.D units)		(2.36)	(2.3)	(2.0)	(2.0)	(2.0)	(2.0)	(2.0)	(2.0)	(2.0)	(1.8)	(1.6)	(1.4)	(1.2)	(1.2)
(L.O units)		(0)	(0.3)	(0.3)	(0.7)	(0.7)	(0.7)	(0.7)	(0.7)	(2.7)	(2.7)	(2.7)	(4.7)	(4.7)	(4.7)
9. Installation cost, hydro	M$ x mil.						7.43	18.57	11.14						
,diesel	"	0.96	0.32	0.96				1.60	4.80		1.60	4.80		1.60	4.80
10. Power generation, hydro	GWh									25.6	26.3	27.2	27.9	28.7	29.5
,diesel	GWh	5.6	5.9	6.1	6.4	6.8	7.1	7.5	7.9	3.3	3.9	4.8	5.4	6.3	7.3
11. Hydro OM cost	M$ x mil.									0.29	0.29	0.29	0.29	0.29	0.29
12. Diesel OM cost, fixed	M$ x mil.	0.23	0.25	0.22	0.26	0.26	0.26	0.26	0.26	0.45	0.43	0.41	0.57	0.57	0.57
variable	M$ x mil.	0.03	0.03	0.03	0.03	0.04	0.04	0.04	0.04	0.02	0.02	0.02	0.03	0.03	0.04
fuel (HSD)	M$ x mil.	1.11	1.04	1.07	0.94	1.13	1.04	1.10	1.17	0.28	0.31	0.35	0.25	0.29	0.33
fuel (LO)		0	0.09	0.09	0.22	0.23	0.24	0.26	0.27	0.25	0.31	0.40	0.55	0.64	0.74
13. Total cost (hydro + diesel)	M$ x mil.	2.33	1.73	2.37	1.45	1.76	9.01	21.83	17.68	1.29	2.96	6.27	1.71	3.42	6.77
(all diesel)	M$ x mil.														

Present Worth (M$ x million): Discount rate (%) All diesel (B) Rate of Return %
Hydro + diesel (A) Net present value (A-B)

TABLE 10 (2) EVALUATION OF PROJECT - CASH FLOW SCHEME (2/2)

System : Kapit Project : Mukoh 4.5 MW Case : (2/2)

Case (c) All hydro primary energy salable in 1994

Description	Unit	2000	01	02	03	04	2005	06	07	08	09	2010	2011-33	2033
1. Demand, peak power (MW)	MW	8.8	9.3	9.8	10.2	10.8	11.3	11.9	12.4	13.1	13.7	14.4	32.2	44.2
2. Demand, energy (GWh)	GWh	38.5	40.7	42.9	44.6	47.3	49.5	52.1	54.3	57.4	60.0	63.1	141.0	193.6
3. Annual load factor	%	50.0	50.0	50.0	50.0	50.0	50.0	50.0	50.0	50.0	50.0	50.0	50.0	50.0
4. Reserve capacity	MW	1.8	1.9	2.0	2.0	2.2	2.3	2.4	2.5	2.6	2.7	2.9	6.4	
5. Required total capacity	MW	10.6	11.2	11.8	12.2	13.0	13.6	14.3	14.9	15.7	16.4	17.3	38.6	
6. Diesel retirement	MW		-1.2		-0.3		-0.4					-2.0		
7. Power addition, hydro	MW													
,diesel	MW	2.0		2.0		2.0			2.0			3.0		
8. System capacity	MW	12.4	11.2	13.2	12.9	14.9	14.5	14.5	16.5	16.5	16.5	17.5	38.6	
(H.S.D units)		(1.2)	(0)											
(L.O units)		(6.7)	(6.7)	(8.7)	(8.4)	(10.4)	(10.0)	(10.0)	(12.0)	(12.0)	(12.0)	(13.0)	(34.1)	
9. Installation cost, hydro	M$ x mil.													
,diesel	"	1.60	4.80	1.60	4.80		1.60	4.80		2.40	7.20			
10. Power generation, hydro	GWh	30.2	31.1	31.9	32.5	33.3	32.9	34.5	35.0	35.4	35.5	35.5	35.6	
,diesel	GWh	8.3	9.6	11.0	12.1	14.0	16.6	17.6	19.3	22.0	24.5	27.6	105.4	
11. Hydro OM cost	M$ x mil.	0.29	0.29	0.29	0.29	0.29	0.29	0.29	0.29	0.29	0.29	0.29	0.29	
12. Diesel OM cost,fixed	M$ x mil.	0.76	0.64	0.84	0.81	1.00	0.96	0.96	1.15	1.15	1.55	1.25	3.27	
variable	M$ x mil.	0.04	0.05	0.06	0.06	0.07	0.09	0.09	0.10	0.11	0.13	0.14	0.55	
fuel (HSD)	M$ x mil.	0.25	0	0	0	0	0	0	0	0	0	0	0	
fuel (LO)	M$ x mil.	0.93	1.27	1.46	1.60	1.85	2.20	2.33	2.55	2.91	3.24	3.65	13.94	
13. Total cost (hydro + diesel)	M$ x mil.	3.87	7.05	4.25	7.56	3.21	5.14	8.47	4.09	6.86	12.01	5.33	18.05	
(all diesel)	M$ x mil.													

Present Worth (M$ x million): Discount rate (%) All diesel (B) Rate of Return %
Hydro + diesel (A) Net present value (A-B)

TABLE 11 (1) EVALUATION OF PROJECT - CASH FLOW SCHEME (1/2)

System : Kapit Project : All Diesel Program Case : (1/2)

Case (c) All hydro primary energy salable in 1994

Description	Unit	1986	87	88	89	1990	91	92	93	94	95	96	97	98	99
1. Demand, peak power (MW)	MW	1.27	1.34	1.40	1.47	1.55	1.63	1.71	1.80	6.6	6.9	7.3	7.6	8.0	8.4
2. Demand, energy (GWh)	GWh	5.6	5.9	6.1	6.4	6.8	7.1	7.5	7.9	28.9	30.2	32.0	33.3	35.0	36.8
3. Annual load factor	%	50.0	50.0	50.0	50.0	50.0	50.0	50.0	50.0	50.0	50.0	50.0	50.0	50.0	50.0
4. Reserve capacity	MW	0.6	0.6	0.6	0.6	0.6	0.6	0.6	0.6	1.3	1.4	1.5	1.5	1.6	1.7
5. Required total capacity	MW	1.87	1.94	2.00	2.07	2.15	2.23	2.31	2.40	7.90	8.3	8.8	9.1	9.6	10.1
6. Diesel retirement	MW		-0.075	-0.288							-0.2	-0.2	-0.2	-0.2	
7. Power addition, hydro	MW														
,diesel	MW		+0.3		+0.4					6.0		1.0		2.0	
8. System capacity		2.36	2.59	2.3	2.7	2.7	2.7	2.7	2.7	8.7	8.5	9.3	9.1	10.9	10.9
(H.S.D units)		(2.36)	(2.3)	(2.0)	(2.0)	(2.0)	(2.0)	(2.0)	(2.0)	(2.0)	(1.8)	(1.6)	(1.4)	(1.2)	(1.2)
(L.O units)		(0)	(0.3)	(0.3)	(0.7)	(0.7)	(0.7)	(0.7)	(0.7)	(6.7)	(6.7)	(7.7)	(7.7)	(9.7)	(9.7)
9. Installation cost, hydro	M$ x mil.														
,diesel	"	0.96	0.32	0.96				4.80	14.40	0.80	2.40	1.60	4.80		2.40
10. Power generation, hydro	GWh														
,diesel	GWh	5.6	5.9	6.1	6.4	6.8	7.1	7.5	7.9	28.9	30.2	32.0	33.3	35.0	36.8
11. Hydro OM cost	M$ x mil.														
12. Diesel OM cost, fixed	M$ x mil.	0.23	0.25	0.22	0.26	0.26	0.26	0.26	0.26	0.84	0.82	0.89	0.87	1.05	1.05
variable	M$ x mil.	0.03	0.03	0.03	0.03	0.04	0.04	0.04	0.04	0.15	0.16	0.17	0.17	0.18	0.19
fuel (HSD)	M$ x mil.	1.11	1.04	1.07	0.94	1.13	1.04	1.10	1.17	1.32	1.26	1.08	0.99	0.76	0.80
fuel (LO)		0	0.09	0.09	0.22	0.23	0.24	0.26	0.27	2.94	3.16	3.51	3.74	4.12	4.33
13. Total cost (hydro + diesel)	M$ x mil.														
(all diesel)	M$ x mil.	2.33	1.73	2.37	1.45	1.76	9.01	6.46	16.14	6.05	7.80	7.25	10.57	6.11	8.77

Present Worth (M$ x million): Discount rate (%) All diesel (B) Rate of Return %
Hydro + diesel (A) Net present value (A-B)

TABLE 11 (2) EVALUATION OF PROJECT - CASH FLOW SCHEME (2/2)

System : Kapit Project : All Diesel Program Case : (2/2)

Case (c) All hydro primary energy salable in 1994

Description	Unit	2000	01	02	03	04	2005	06	07	08	09	2010	2011-33	2033
1. Demand, peak power (MW)	MW	8.8	9.3	9.8	10.2	10.8	11.3	11.9	12.4	13.1	13.7	14.4	32.2	44.2
2. Demand, energy (GWh)	GWh	38.5	40.7	42.9	44.6	47.3	49.5	52.1	54.3	57.4	60.0	63.1	141.0	193.6
3. Annual load factor	%	50.0	50.0	50.0	50.0	50.0	50.0	50.0	50.0	50.0	50.0	50.0	50.0	50.0
4. Reserve capacity	MW	1.8	1.9	2.0	2.0	2.2	2.3	2.4	2.5	2.6	2.7	2.9	6.4	
5. Required total capacity	MW	10.6	11.2	11.8	12.2	13.0	13.6	14.3	14.9	15.7	16.4	17.3	38.6	
6. Diesel retirement	MW		-1.2		-0.3		-0.4					-6.0		
7. Power addition, hydro	MW													
,diesel	MW		3.0			2.0		1.0		2.0		7.0		
8. System capacity	MW	10.9	12.7	12.7	12.4	14.4	14.0	15.0	15.0	17.0	17.0	18.0	38.6	
(H.S.D units)		(1.2)	(0)											
(L.O units)		(9.7)	(12.7)	(12.7)	(12.4)	(14.4)	(14.0)	(15.0)	(15.0)	(17.0)	(17.0)	(18.0)	(38.6)	
9. Installation cost, hydro	M$ x mil.													
,diesel	"	7.20		1.60	4.80	0.80	2.40	1.60	4.80	5.60	16.80			
10. Power generation, hydro	GWh													
,diesel	GWh	38.5	40.7	42.9	44.6	47.3	49.5	52.1	54.3	57.4	60.0	63.1	141.0	
11. Hydro OM cost	M$ x mil.													
12. Diesel OM cost, fixed	M$ x mil.	1.05	1.22	1.22	1.19	1.38	1.34	1.44	1.44	1.63	1.63	1.73	3.71	
variable	M$ x mil.	0.20	0.21	0.22	0.23	0.25	0.26	0.27	0.28	0.30	0.31	0.33	0.73	
fuel (HSD)	M$ x mil.	0.84	0	0	0	0	0	0	0	0	0	0	0	
fuel (LO)	M$ x mil.	4.53	5.38	5.68	5.90	6.26	6.55	6.89	7.18	7.59	7.94	8.35	18.65	
13. Total cost (hydro + diesel)	M$ x mil.													
(all diesel)	M$ x mil.	13.82	6.81	8.72	12.12	8.69	10.55	10.20	13.70	15.12	26.68	10.41	23.09	

Present Worth (M$ x million): Discount rate (%) All diesel (B) Rate of Return %

Hydro + diesel (A) Net present value (A-B)

SUPPLEMENTARY NOTE NO.3

MUKOH SCHEME
A BRIEF STUDY ON THE CUT-AND-COVER WATERWAY

SUPPLEMENTARY NOTE No. 3

MUKOH SCHEME

A BRIEF STUDY ON THE CUT-AND-COVER WATERWAY PLAN

This paper is to examine an alternative waterway layout plan of the Mukoh scheme, where a cut-and-cover conduit type waterway is planned instead of tunnel plan proposed in Part - I of this volume.

1. Scheme Layout

A preliminary layout plan is shown in Fig. 1. A 750 m long cut-and-cover conduit waterway is planned in the middle part of headrace where topography is relatively gentle. The total headrace waterway length is 1,520 m; 140 m shorter compared with the tunnel plan.

2. Waterway Alternatives

The headrace waterway must be 2 m or larger in the cross section to accommodate discharge of 7.4 m^3/s (Installed capacity 1.94 MW). For this size of section, two (2) alternatives are conceivable: One is a cast-in-place concrete culvert and the other is the HDPE pipe. The typical cross sections of two alternatives are shown in Fig. 2.

Construction cost per meter is roughly estimated as follows (See Table 1 for further detail):

(Unit : thousand M$)

	Concrete Culvert	HDPE Pipe
Waterway platform road	920	920
Waterway construction	2,650	2,940
Total cost per meter	3,570	3,860

Both types are almost equal in cost term. In view of technical uncertainties involved in large-sized HDPE pipe construction, less structural rigidity and possibly excessive deflection based on quality of backfilling work, this paper assumes the waterway to be of concrete culvert construction.

3. Comparison of Total Construction Cost

Comparing the "cut-and-cover conduit plan" (examined herein) and "tunnel plan" (proposed in Volume-I), following are noted:

(a) The cut-and-curve waterway route, after backfilled, can be used as a permanent access road. Instead, a temporary road connecting Weir and Powerhouse sites will be required during a period of culvert/pipe installation work (See Fig. 1).

(b) The layout of other structures is virtually the same between the two alternative plans.

Construction costs of two alternatives so estimated are shown in Table 2, giving that the tunnel plan proposed in Part - I of this volume is less costly.

4. Further Study during the Feasibility Study Period

The tunnel type headrace waterway is conceived for the Mukoh scheme at this preliminary study stage. However, this should be subject to a further detailed review during the feasibility study based on more detailed topographic information obtained therein.

The review would include;

- Topographic survey along the proposed cut-and-cover waterway
- Possibility of the cut-and-cover waterway for a full length of headrace
- Survey of HDPE pipe costs
- Comparison of costs of two alternatives based on finally proposed layout plans of waterway including sand trap basin.

Table 1 COST ESTIMATE OF WATERWAY

Description	Unit	Q'ty	Unit price (M$)	Amount (thousan M$)
1. Waterway Platform* (per metre)				
Excavation	m^2	90	8	720
Drain ditch	m^2	1	50	50
Slope protection, etc. 20%	LS			150
Cost per metre				920
2. Concrete culvent (per metre)				
Trench excavation	m^2	18	30	450
Backfill	m^2	7	6	42
Concrete	m^2	3.4	400	1,360
Reinforcement	ton	0.17	1,600	272
Miscellaneous 20%	LS			436
Cost per metre				2,650
3. HDPE Pipe (per metre)				
Trench excavation	m^2	24	30	720
Backfill	m^2	17	6	102
Concrete	m^2	0.1	400	40
Reinforcement	ton	0.005	1,600	8
HDPE pipe 3 metre dia.	m	1	1,800	1,800
Miscellaneous 10%				270
Cost per metre				2,940

Note: * Common to both concrete culvert and HDPE pipe plans. Later to be used as a permenent access road.

Table 2 COMPARISON OF CONSTRUCTION COST

Million M$

Work Items	Headrace Alternatives	
	Tunnel	Cut-and-cover conduit
1. Civil Works		
Intake weir	614	614
Intake	389	389
Sand-trap basin	643	643
Headrace		
- Tunnel	3,874(1,660m)	1,797(770m)
- Cut-and-cover conduit	-	2,678(750m)
Head tank	997	997
Penstock	241	241
Powerhouse	990	990
Preparatory works 15%	1,162	1,670
Sub-total	8,910	10,019
2. Generating Equipment	3,742	3,742
3. Transmission Line	1,800	1,800
4. Access Roads		
- Permanent access road	1,980 (6 km)	1,750 (5.3 km)
- Temporary road	-	120 (1.2 km)
- Existing road maintenance	400	400
Sub-total	2,380	2,270
Sub-total of 1 to 4	16,832	17,831
5. Engineering/administration	1,683	1,783
6. Contingency 15%	2,777	2,942
TOTAL	21,292	22,556

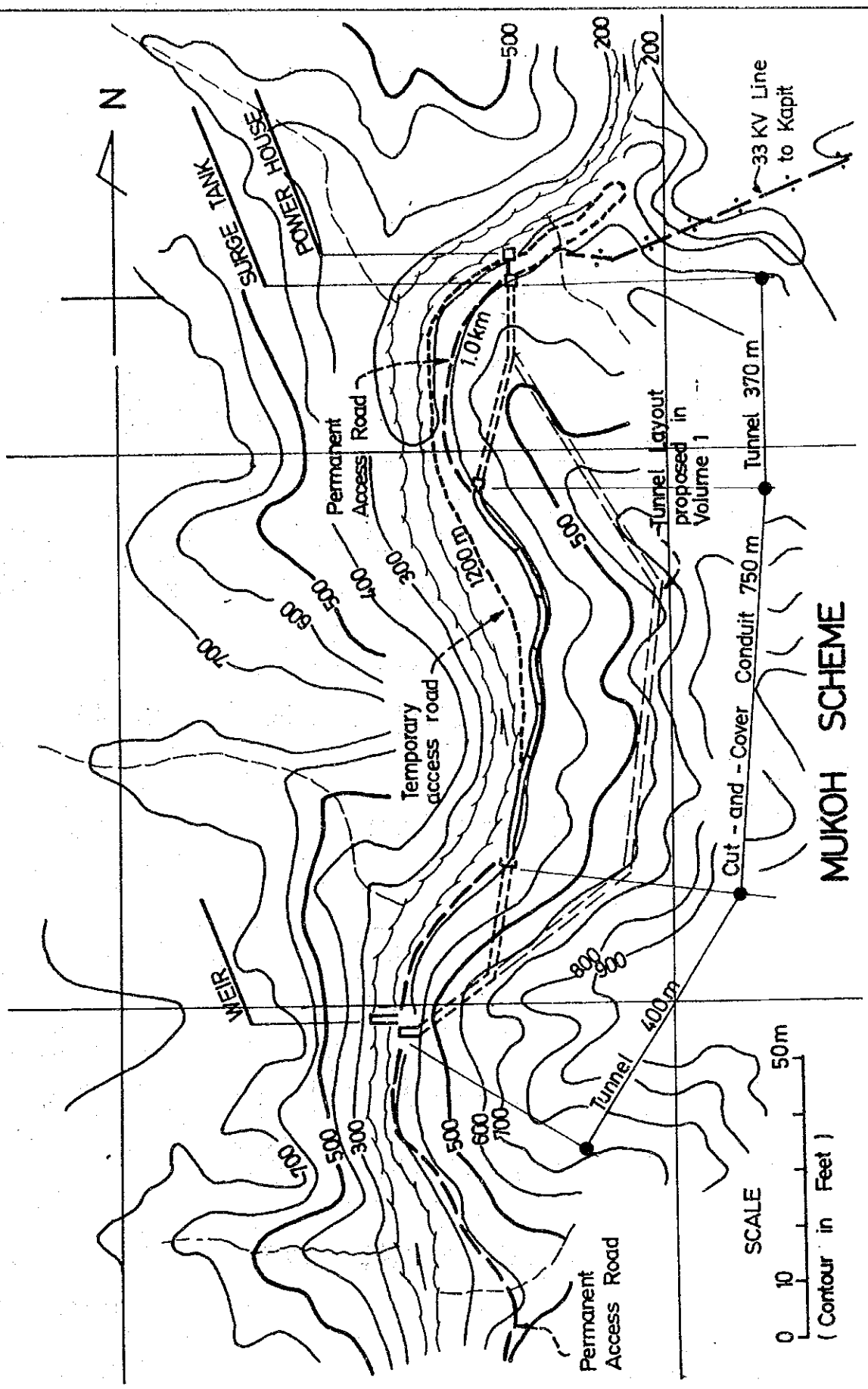

Fig. 1. PRELIMINARY LAYOUT OF CUT-AND-COVER WATERWAY PLAN

GOVERNMENT OF MALAYSIA
FEASIBILITY STUDY
SMALL SCALE HYDROELECTRIC POWER PROJECT IN SARAWAK
JAPAN INTERNATIONAL COOPERATION AGENCY

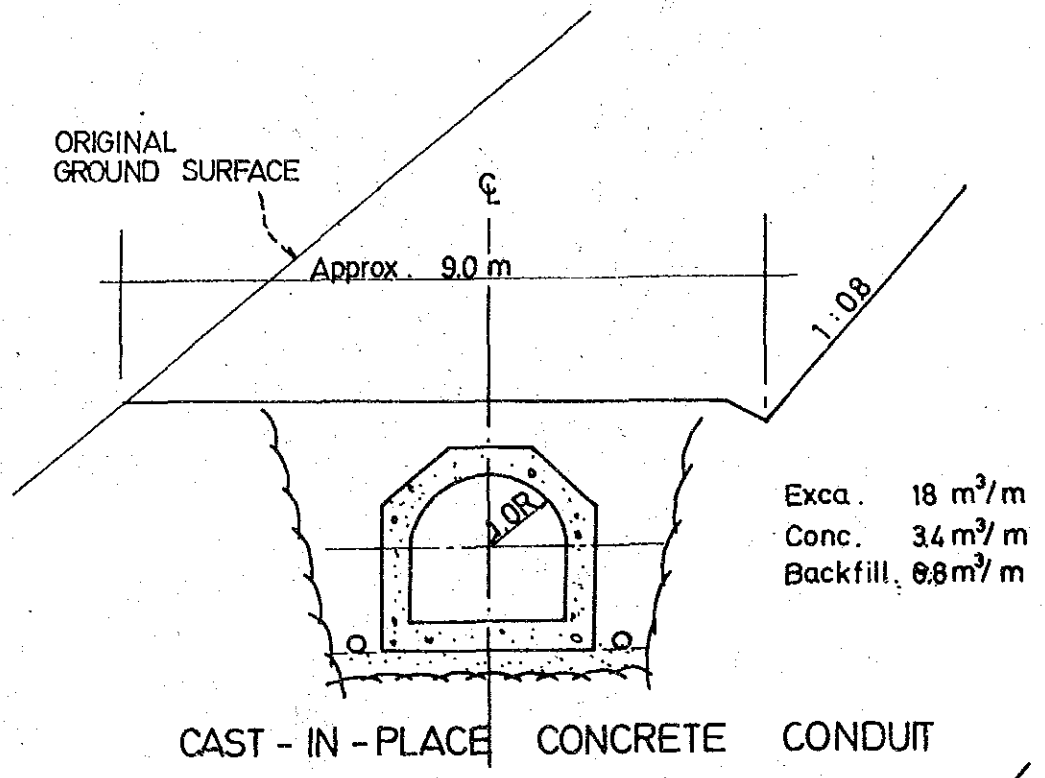

CAST - IN - PLACE CONCRETE CONDUIT

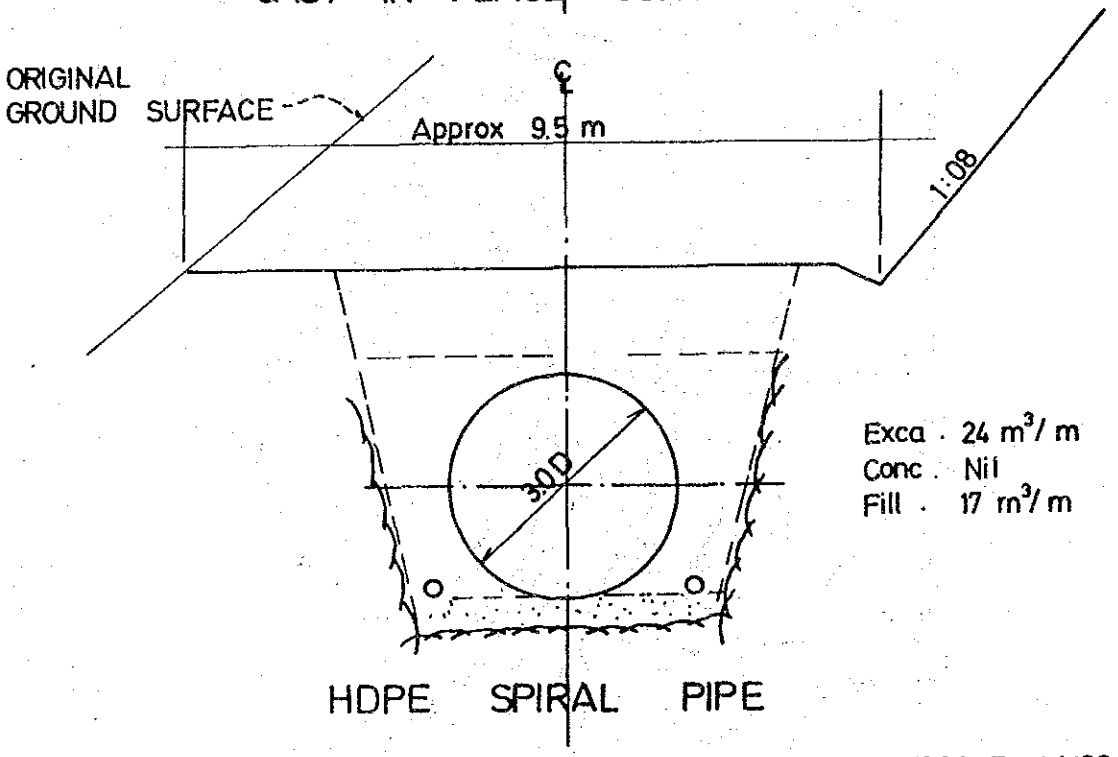

HDPE SPIRAL PIPE

SCALE 1/100

Fig. 2 CUT-AND-COVER CONDUIT WATERWAY
TYPICAL CROSS SECTIONS

GOVERNMENT OF MALAYSIA
FEASIBILITY STUDY
SMALL SCALE HYDROELECTRIC POWER PROJECT IN SARAWAK
JAPAN INTERNATIONAL COOPERATION AGENCY

SUPPLEMENTARY NOTE NO.4

MEDAMIT-2 SCHEME

MINIMUM DEVELOPMENT

SCALE AT MEDAMIT-2 SITE

SUPPLEMENTARY NOTE No. 4

MEDAMIT-2 SCHEME

MINIMUM DEVELOPMENT SCALE AT THE MEDAMIT-2 SITE

During discussion on November 15, 1986, a question was raised from SESCO how the attractiveness of Medamit-2 would be if it is developed at a minimum scale. This subject is examined in this paper.

1. Minimum Development Scale at the Medamit-2 Site

Principal works of the Medamit-2 scheme are the construction of headrace tunnel (4.4 km long). In this respect, the minimum development scale would be a plan with the minimum tunnel diameter, herein taken at 1.8 m.

The main features of the scheme are given in Table-1.

2. Evaluation of Scheme

The evaluation of scheme was made in the same manner as described in Section 14.3 of this volume.

A cash flow schedule (on financial cost basis) is presented in Table 2 attached hereto. A cash flow for "all diesel programme (as benefit stream)" is same as shown in Table 14.4 of this volume.

Evaluated indices are as follows:

- kWh cost*	Mø 12.9/kWh
- Net present value	M$ 4.98 million
- B/C	1.08
- EIRR	15.8

* On basis that all energy is consumed in the system.

The above indices are favourably compared with the figures assessed for the original plan (Run-of-river with pondage, 4.49 MW in installed capacity). Accordingly, this minimum development plan will be one of possible solution for initial development of the Medamit-2 scheme, presumably to be followed by its extension. This plan should be further examined in the subsequent feasibility study.

Table 1 Main Features of Minimum Development at the Medamit-2 Site

Type of developmemt	Run-of-river without a regulating pondage
Firm discharge	3.9 m^3/s
Plant discharge	5.2 m^3/s
Effective head	60.3 m
Full supply level	137.0 m
Tailwater level	70.0 m
Weir height	7 m
Headrace , length	4,400 m
, diameter	1.8 m
Penstock , length	130 m
, diameter	1.3 m
Installed capacity	2.6 MW
Dependable output	2.0 MW
Annual energy	
- Primary	16.9 GWh
- Secondary	5.6 GWh
Total	22.5 GWh
Transmission line	
- Length	60 km
- Voltage (kV) x circuit	33 kV x 1 circuit
Construction cost	M$ 23.1 million

TABLE 2 (1) EVALUATION OF PROJECT - CASH FLOW SCHEME (1/2)

System : Limbang Project : Medamit 2.6 MW Case : Min. Develop. Plan (1/2)

Description	Unit	1986	87	88	89	1990	91	92	93	94	95	96	97	98	99
1. Demand, peak power (MW)	MW	2.3	2.5	2.7	2.9	3.2	3.6	4.0	4.3	4.6	5.0	5.3	5.7	6.1	6.5
2. Demand, energy (GWh)	GWh	11.8	12.7	13.8	15.0	16.5	18.2	20.1	21.7	23.3	25.0	26.7	28.6	30.5	32.6
3. Annual load factor	%	59	58	58	59	59	58	57	58	58	57	57	57	57	57
4. Reserve capacity	MW	1.0	1.0	1.0	1.0	1.0	1.0	1.0	1.0	1.0	1.0	1.1	1.1	1.2	1.3
5. Required total capacity	MW	3.3	3.5	3.7	3.9	4.2	4.6	5.0	5.3	5.6	6.0	6.4	6.8	7.3	7.8
6. Diesel retirement	MW							-0.675		-1.06		-0.2	-0.6		
7. Power addition, hydro	MW									2.0					
,diesel	MW			0.6		1.0		1.0				2.0			1.0
8. System capacity		3.6	3.6	4.2	4.2	5.2	5.2	5.5	5.5	6.4	6.4	8.2	7.6	7.6	8.6
(H.S.D units)															
(L.O units)										(4.4)	(4.4)	(6.2)	(5.6)	(5.6)	(6.6)
9. Installation cost, hydro	M$ x mil.						4.62	11.55	6.93						
,diesel	"	0.48	1.44	0.80	2.40	0.80	2.40			1.60	4.80		0.80	2.40	1.60
10. Power generation, hydro	GWh									18.8	19.5		20.6	21.6	21.4
,diesel	GWh	11.8	12.7	13.8	15.0	16.5	18.2	20.1	21.7	4.5	5.5	5.9	8.0	8.9	11.2
11. Hydro OM cost	M$ x mil.									0.18	0.18	0.18	0.18	0.18	0.18
12. Diesel OM cost, fixed	M$ x mil.	0.35	0.35	0.40	0.40	0.50	0.50	0.53	0.53	0.42	0.42	0.60	0.54	0.54	0.63
variable	M$ x mil.	0.06	0.07	0.07	0.08	0.09	0.09	0.10	0.11	0.02	0.03	0.03	0.04	0.05	0.06
fuel (HSD)	M$ x mil.														
fuel (LO)		1.47	1.58	1.72	1.87	2.06	2.27	2.51	2.71	0.56	0.69	0.74	1.00	1.11	1.40
13. Total cost (hydro + diesel)	M$ x mil.	2.36	3.44	2.99	4.75	3.45	9.88	14.69	10.28	2.78	6.12	1.55	2.56	4.28	3.87
(all diesel)	M$ x mil.														

Present Worth (M$ x million): Discount rate (%) All diesel (B) Rate of Return %
Hydro + diesel (A) Net present value (A-B)

TABLE 2 (2) EVALUATION OF PROJECT - CASH FLOW SCHEME (1/2)

System : Limbang Project : Medamit-2 Case : Min. Develop. Plan (2/2)

Description	Unit	2000	01	02	03	04	2005	06	07	08	09	2010	2011-33	2033
1. Demand, peak power (MW)	MW	7.0	7.4	7.8	8.3	8.8	9.3	9.9	10.4	11.1	11.7	12.4	29.3	46.2
2. Demand, energy (GWh)	GWh	34.9	37.0	39.1	41.4	43.9	46.4	49.2	52.1	55.1	58.4	61.8	145.9	230.0
3. Annual load factor	%	57.0	57.0	57.0	57.0	57.0	57.0	57.0	57.0	57.0	57.0	57.0	57.0	57.0
4. Reserve capacity	MW	1.4	1.5	1.6	1.7	1.8	1.9	2.0	2.1	2.2	2.3	2.5	5.9	
5. Required total capacity	MW	8.4	8.9	9.4	10.0	10.6	11.2	11.9	12.5	13.3	14.0	14.9	35.2	
6. Diesel retirement	MW		-1.05			-0.6		-1.0		-1.0				
7. Power addition, hydro	MW													
,diesel	MW		2.0		2.0		2.0		3.0			1.0		
8. System capacity	MW	8.6	9.6	9.6	11.6	11.0	13.0	12.0	15.0	14.0	14.0	15.0	35.2	
(H.S.D units)														
(L.O units)		(6.6)	(7.6)	(7.6)	(9.6)	(9.0)	(11.0)	(10.0)	(13.0)	(12.0)	(12.0)	(13.0)	(33.2)	
9. Installation cost, hydro	M$ x mil.													
,diesel	"	4.80	1.60	4.80	1.60	4.80	2.40	7.20		0.80	2.40			
10. Power generation, hydro	GWh	21.9	22.0	22.1	22.2	22.2	22.2	22.2	22.2	22.2	22.2	22.2	22.2	
,diesel	GWh	13.0	15.0	17.0	19.2	21.7	24.2	27.0	29.9	32.9	36.2	39.6	123.7	
11. Hydro OM cost	M$ x mil.	0.18	0.18	0.18	0.18	0.18	0.18	0.18	0.18	0.18	0.18	0.18	0.18	
12. Diesel OM cost,fixed	M$ x mil.	0.63	0.73	0.73	0.92	0.86	1.06	0.96	1.25	1.15	1.15	1.25	3.19	
variable	M$ x mil.	0.07	0.08	0.09	0.10	0.11	0.13	0.14	0.16	0.17	0.19	0.21	0.64	
fuel (HSD)	M$ x mil.													
fuel (LO)	M$ x mil.	1.62	1.87	2.12	2.40	2.71	3.06	3.37	3.73	4.11	4.52	4.94	15.44	
13. Total cost (hydro + diesel)	M$ x mil.	7.30	4.46	7.92	5.20	8.66	6.79	11.85	5.32	6.41	8.44	6.58	19.45	
(all diesel)	M$ x mil.													

Present Worth (M$ x million) Discount rate (%) All diesel (B) Rate of Return %

Hydro + diesel (A) Net present value (A-B)