PLAN SCALE 1:2,000

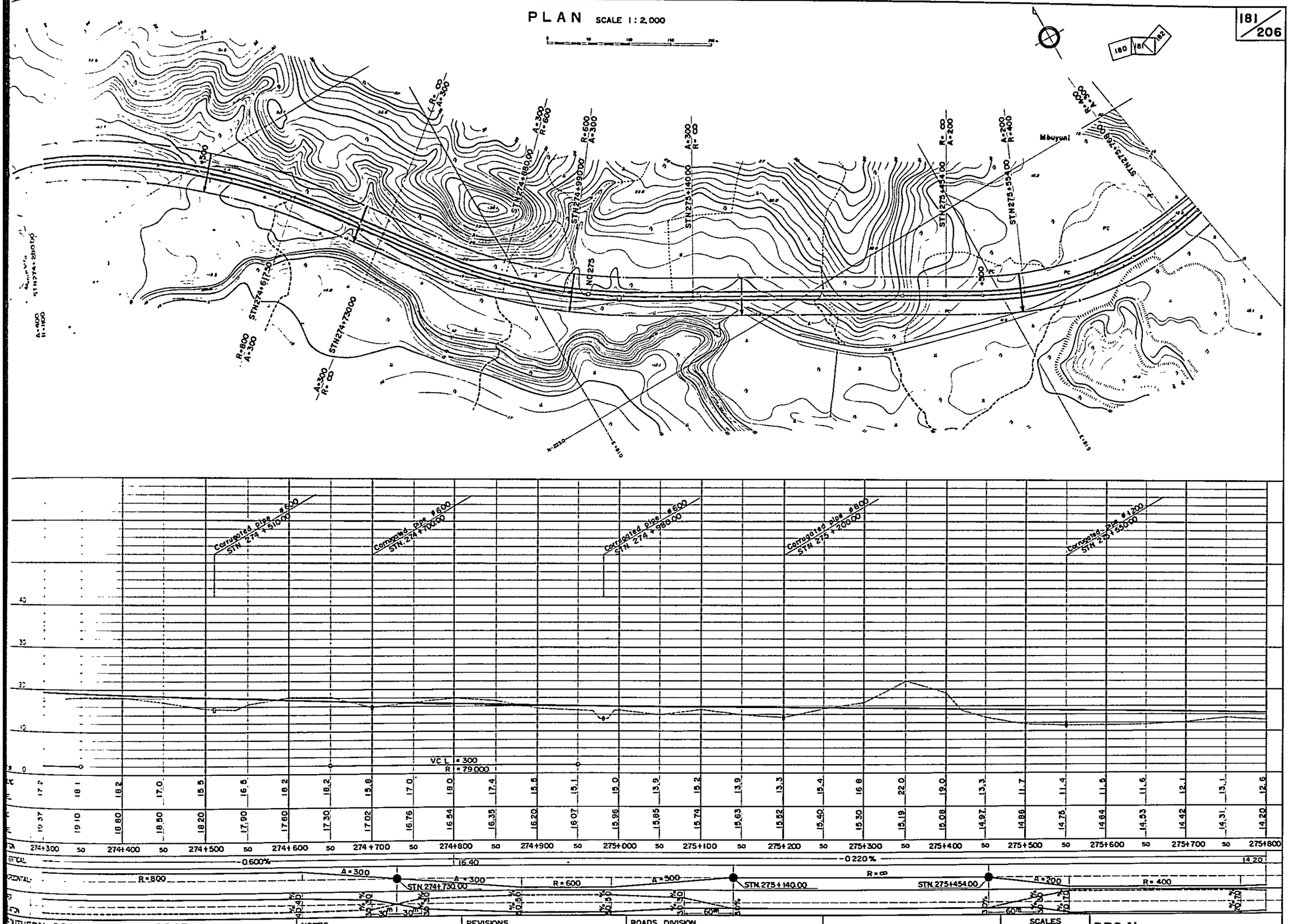

STA	274+300	50	274+400	50	274+500	50	274+600	50	274+700	50	274+800	50	274+900	50	275+000	50	275+100	50	275+200	50	275+300	50	275+400	50	275+500	50	275+600	50	275+700	50	275+800
EXISTING	17.2	18.1	18.2	17.0	15.5	16.5	18.2	18.2	15.8	17.0	18.0	17.4	15.5	15.1	15.0	13.9	15.2	13.9	13.3	15.4	16.8	22.0	19.0	13.3	11.7	11.4	11.5	11.6	12.1	13.1	12.6
FORMATION	19.37	19.10	18.80	18.50	18.20	17.90	17.60	17.30	17.02	16.76	16.54	16.35	16.20	16.07	15.96	15.85	15.74	15.63	15.52	15.40	15.30	15.19	15.08	14.97	14.86	14.75	14.64	14.53	14.42	14.31	14.20

SOUTHERN COASTAL LINK ROAD
SECTION 4 KIRANJERANGE —— LINDI
PLAN AND LONGITUDINAL SECTION STN Km 274+300 TO STN Km 275+800
MINISTRY OF WORKS

NOTES

REVISIONS

ROADS DIVISION
DIRECTOR OF ROADS .....
DATE .....
MW, DRG. No.

SCALES
HORIZONTAL 1:2000
VERTICAL 1:400

DRG. No.
DATE
SHEET 186 OF 269

PLAN SCALE 1:2,000

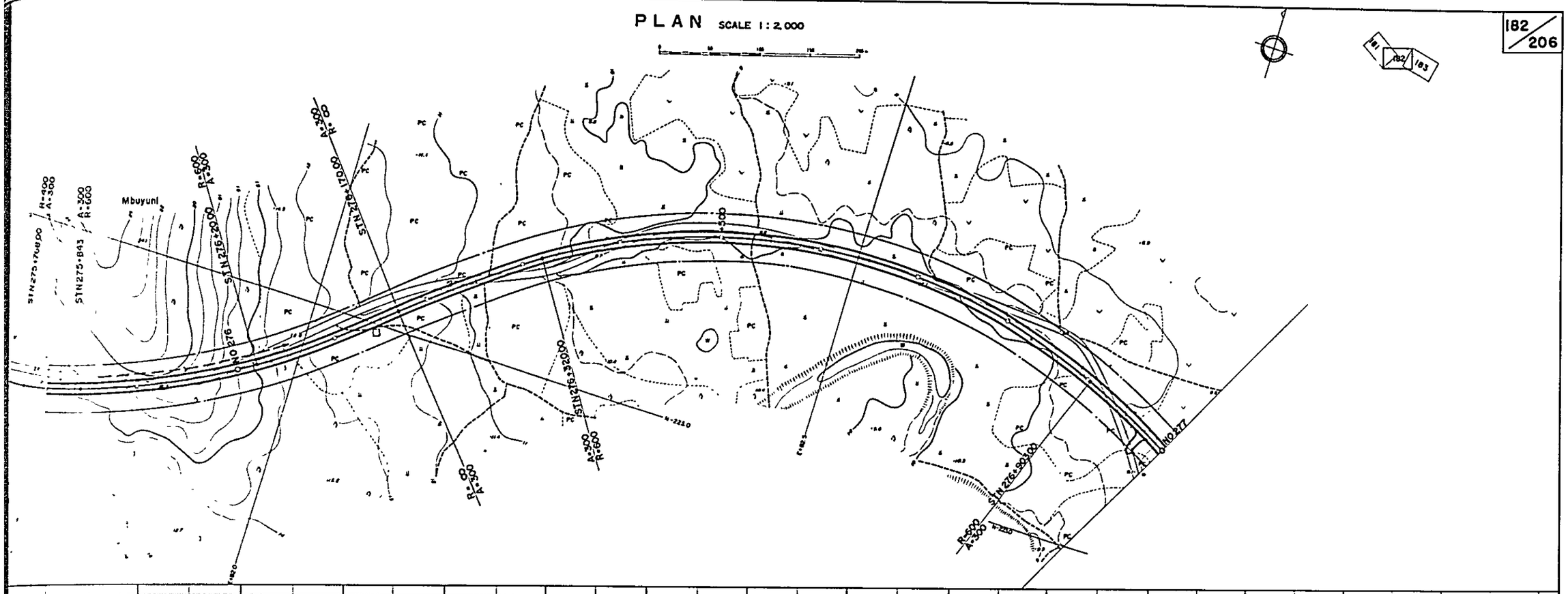

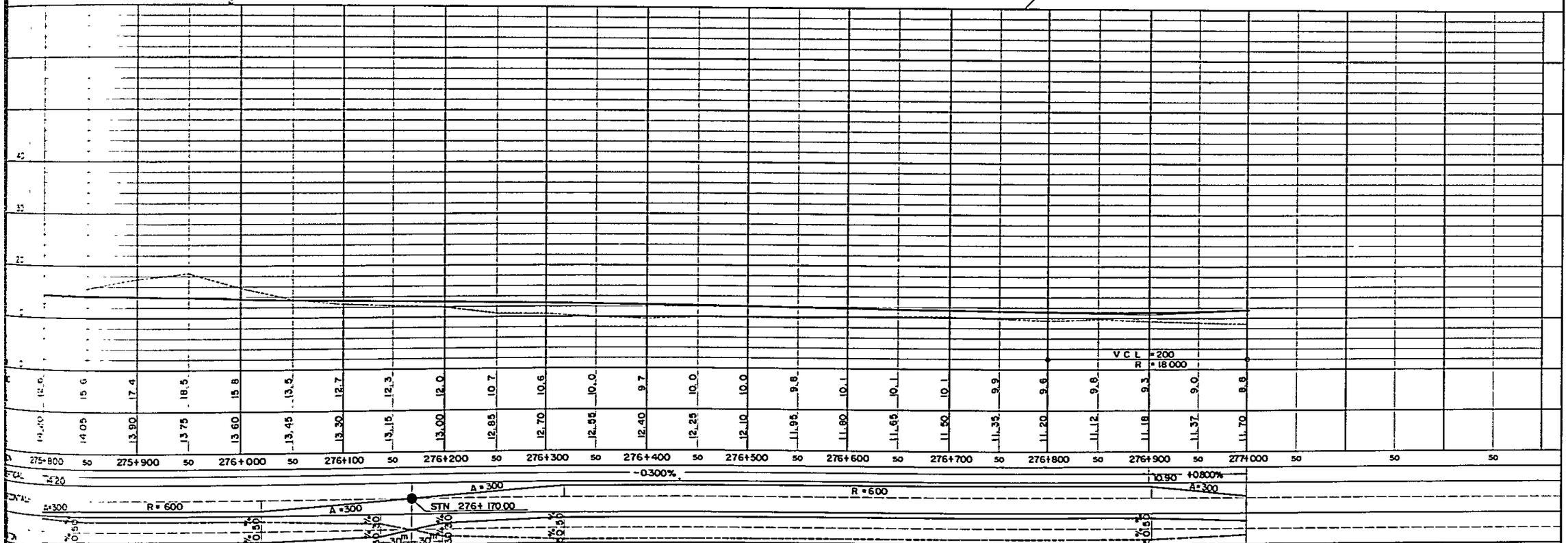

SOUTHERN COASTAL LINK ROAD
C.14 KIRANJERANGE — LINDI
LONGITUDINAL SECTION STN Km 275+800 TO STN Km 277+000
MINISTRY OF WORKS

NOTES

REVISIONS

ROADS DIVISION
DIRECTOR OF ROADS .....
DATE .....
MW, DRG. No.

SCALES
HORIZONTAL 1:2,000
VERTICAL 1:400

DRG. No.
DATE
SHEET 187 OF 269

PLAN SCALE 1:2,000

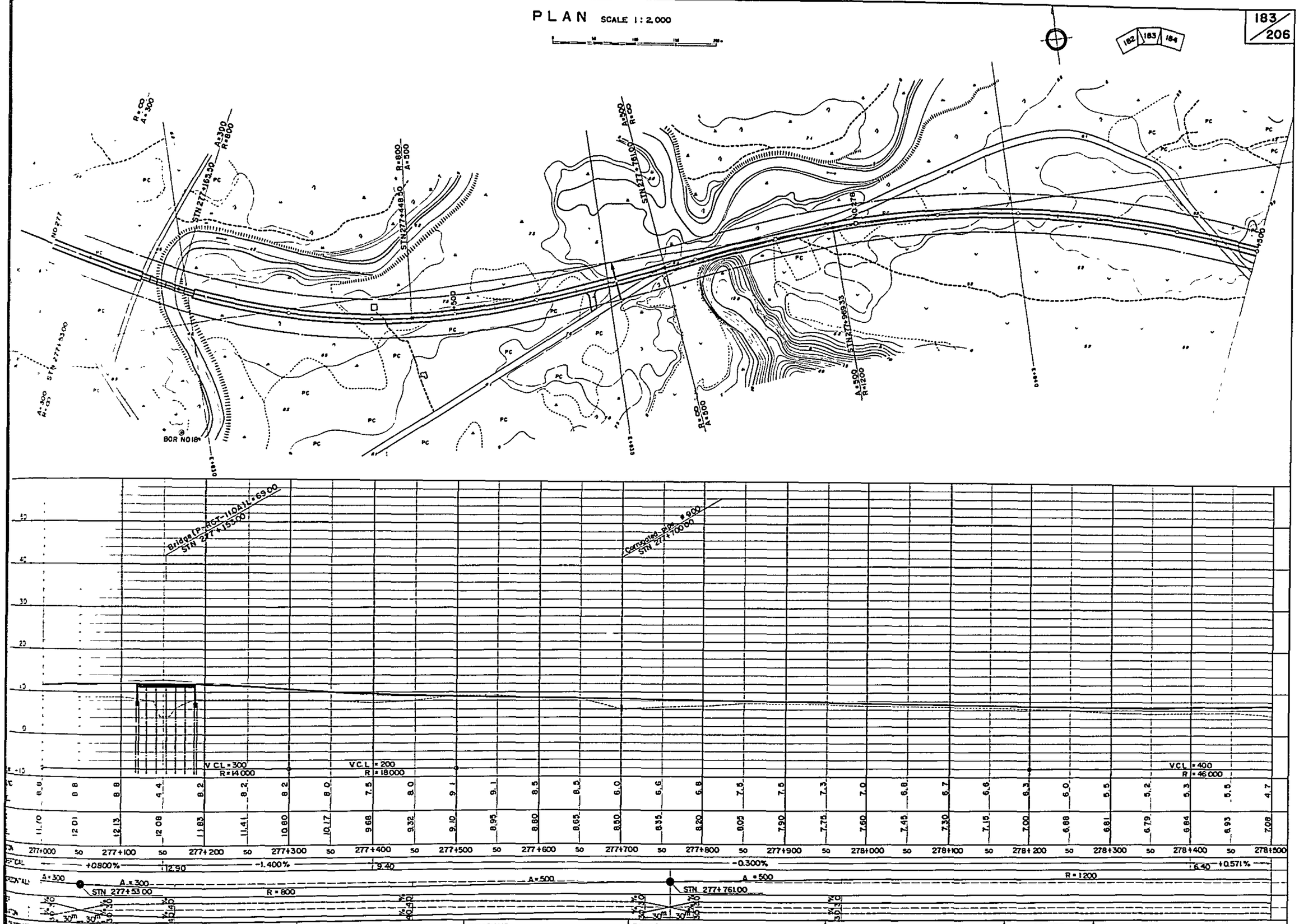

SOUTHERN COASTAL LINK ROAD
SECTION 4 KIRANJERANGE — LINDI
PROFILE LONGITUDINAL SECTION STN Km 277+000 TO STN Km 278+500
MINISTRY OF WORKS

NOTES

REVISIONS

ROADS DIVISION
DIRECTOR OF ROADS .....
DATE .....
MW, DRG. No.

SCALES
HORIZONTAL 1:2,000
VERTICAL 1:400

DRG. No.
DATE
SHEET 188 OF 269

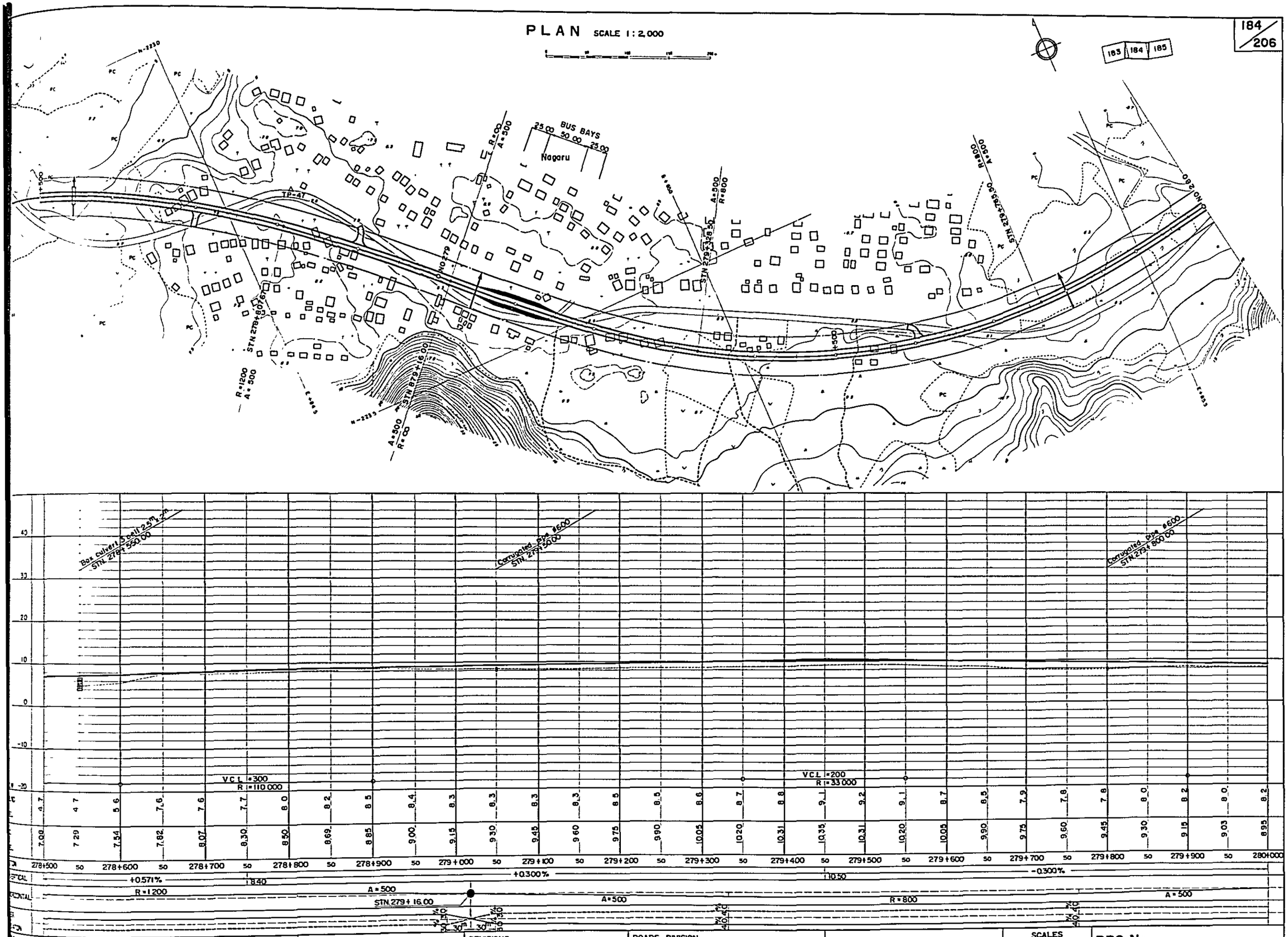

SOUTHERN COASTAL LINK ROAD C14 KIRANJERANGE — LINDI PROFILE LONGITUDINAL SECTION STN.Km 278+500 TO STN.Km. 280+000 MINISTRY OF WORKS	NOTES	REVISIONS	ROADS DIVISION DIRECTOR OF ROADS ..... DATE ..... MW, DRG. No.	SCALES HORIZONTAL 1 : 2,000 VERTICAL 1 : 400	DRG. No. DATE SHEET 189 OF 269

PLAN SCALE 1:2,000

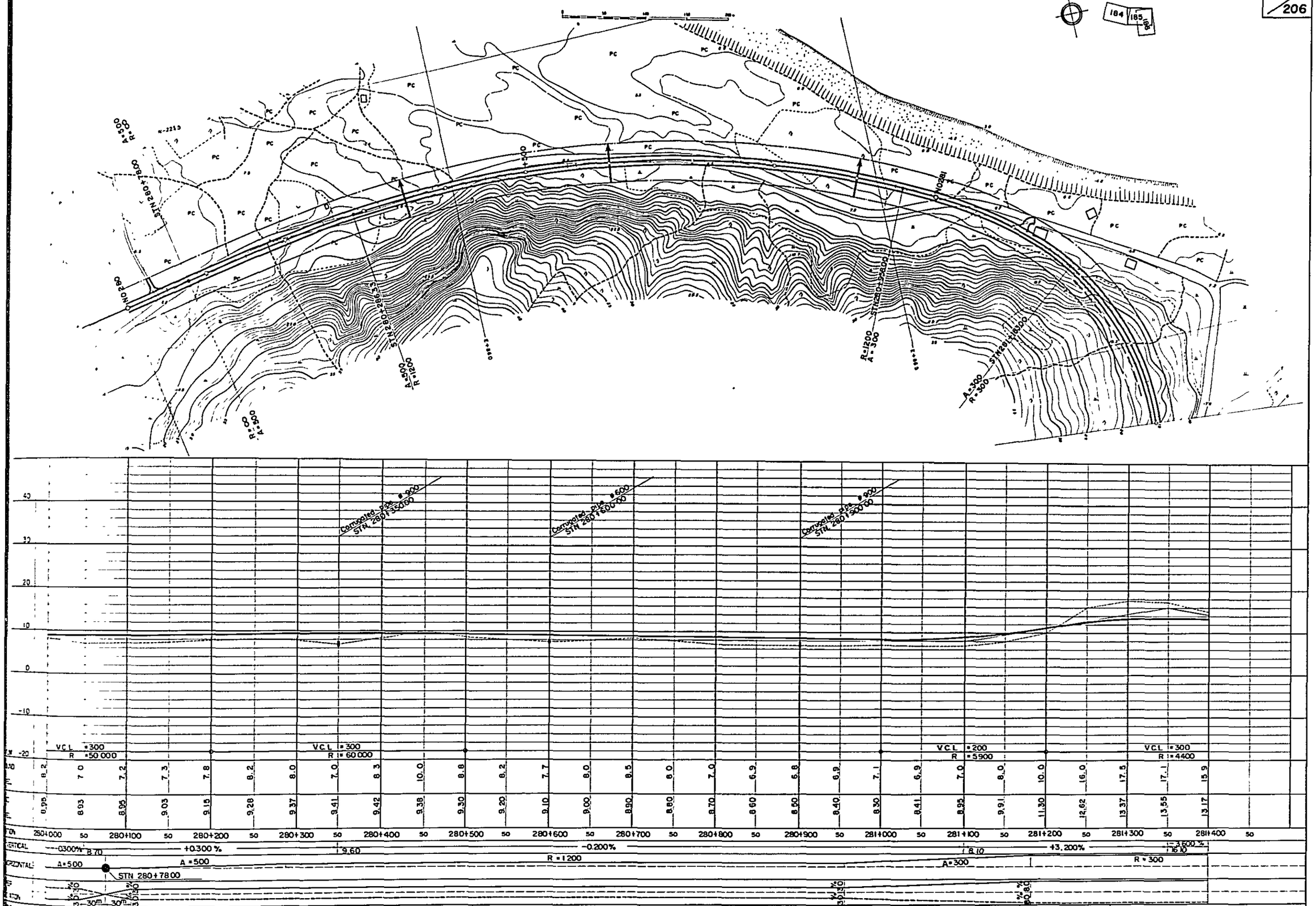

SOUTHERN COASTAL LINK ROAD
SECTION 4 - KIRANJERANGE — LINDI
PLAN AND LONGITUDINAL SECTION STN Km 280+000 TO STN Km. 281+400
MINISTRY OF WORKS

NOTES	REVISIONS	ROADS DIVISION DIRECTOR OF ROADS ..... DATE ..... MW, DRG. No.		SCALES HORIZONTAL 1:2,000 VERTICAL 1:400	DRG. No. DATE SHEET 190 OF 269

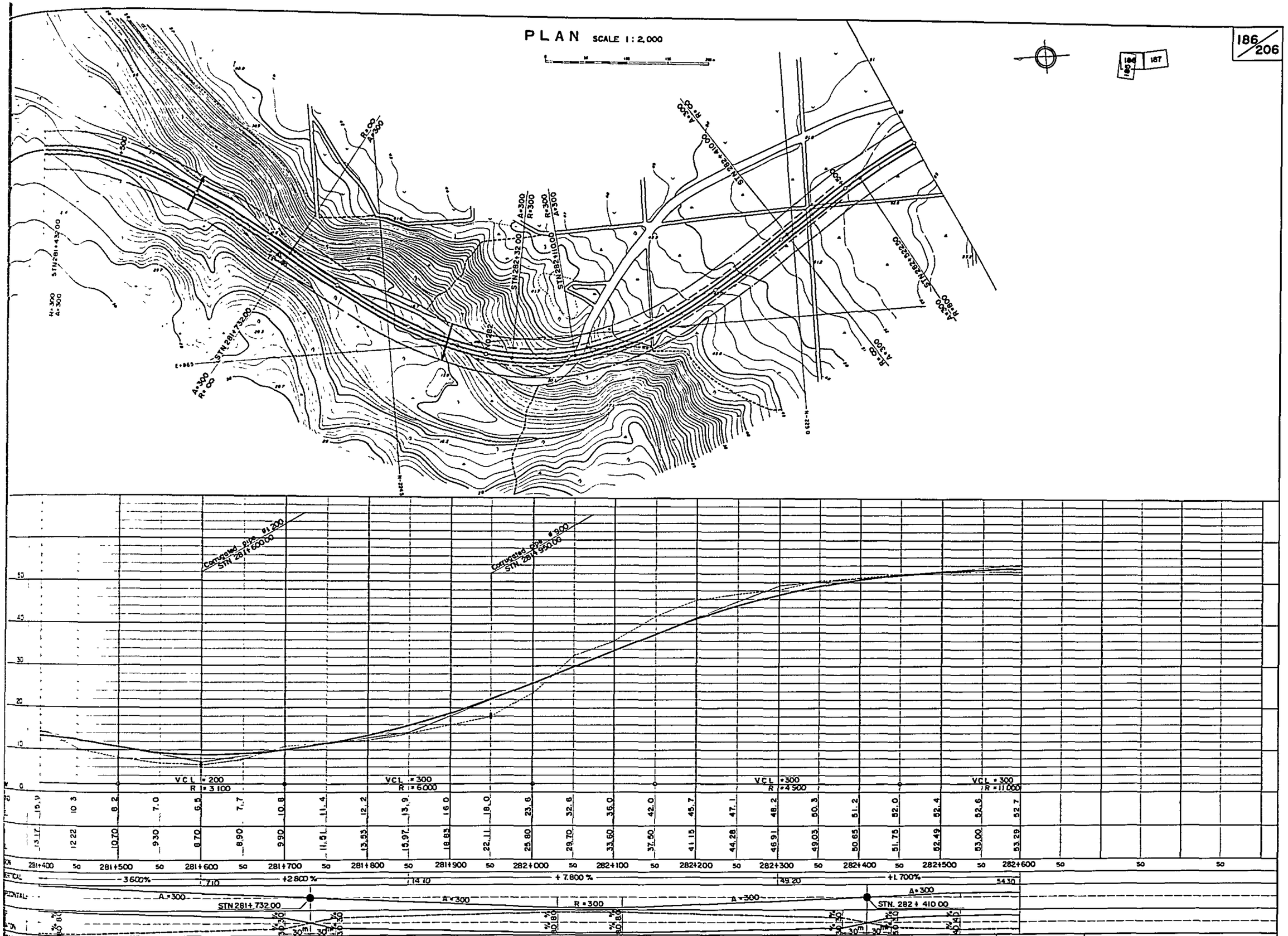
PLAN SCALE 1:2,000
STN 281+732.00
STN 282+32.00
STN 282+110.00
STN 282+410.00
STN 282+222.00
STN 281+43.00
Corrugated pipe ø1.200
STN 281+600.00
Corrugated pipe ø900
STN 281+950.00
VCL = 200
R = 3100
VCL = 300
R = 6000
VCL = 300
R = 4500
VCL = 300
R = 11000
281+400
281+500
281+600
281+700
281+800
281+900
282+000
282+100
282+200
282+300
282+400
282+500
282+600
-3.600%
+2.800%
+7.800%
+1.700%
A=300
R=300
STN 281+732.00
STN. 282+410.00
SOUTHERN COASTAL LINK ROAD
SECTION 4 KIRANJERANGE — LINDI
AND LONGITUDINAL SECTION STN Km 281+400 TO STN Km 282+600
MINISTRY OF WORKS
NOTES
REVISIONS
ROADS DIVISION
DIRECTOR OF ROADS
DATE
MW. DRG. No.
SCALES
HORIZONTAL 1:2.000
VERTICAL 1:400
DRG. No.
DATE
SHEET 191 OF 269

186 | 187 | 188

PLAN SCALE 1:2,000

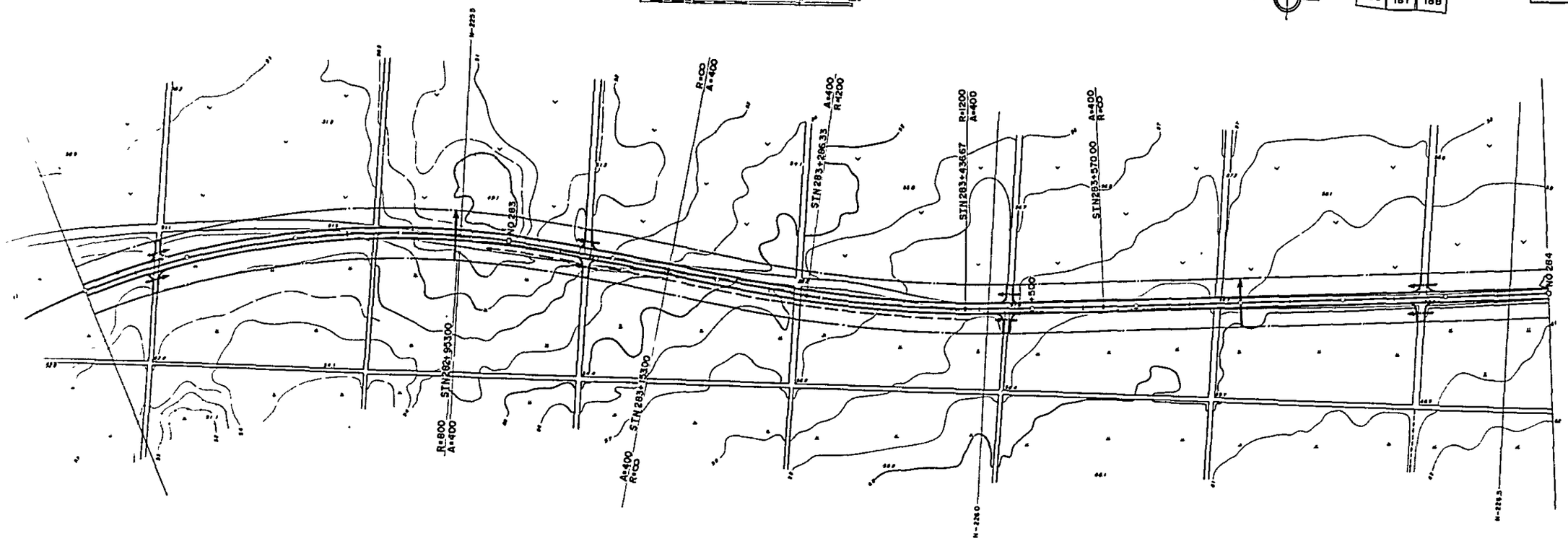

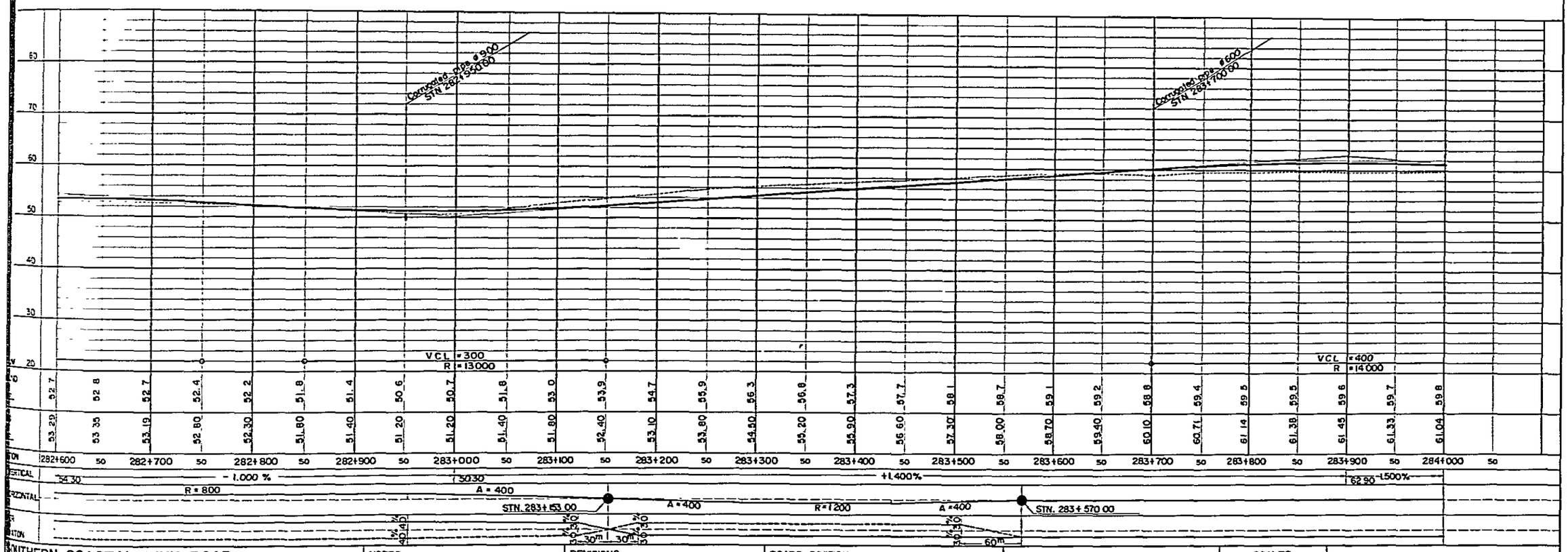

SOUTHERN COASTAL LINK ROAD SECTION 4 KIRANJERANGE —— LINDI AND LONGITUDINAL SECTION STN Km 282+600 TO STN Km 284+000 MINISTRY OF WORKS	NOTES	REVISIONS	ROADS DIVISION DIRECTOR OF ROADS ..... DATE ..... MW, DRG. No.
SCALES HORIZONTAL 1 : 2,000 VERTICAL 1 : 400	DRG. No. DATE SHEET 192 OF 269		

187 | 188 | 189

PLAN SCALE 1 : 2,000

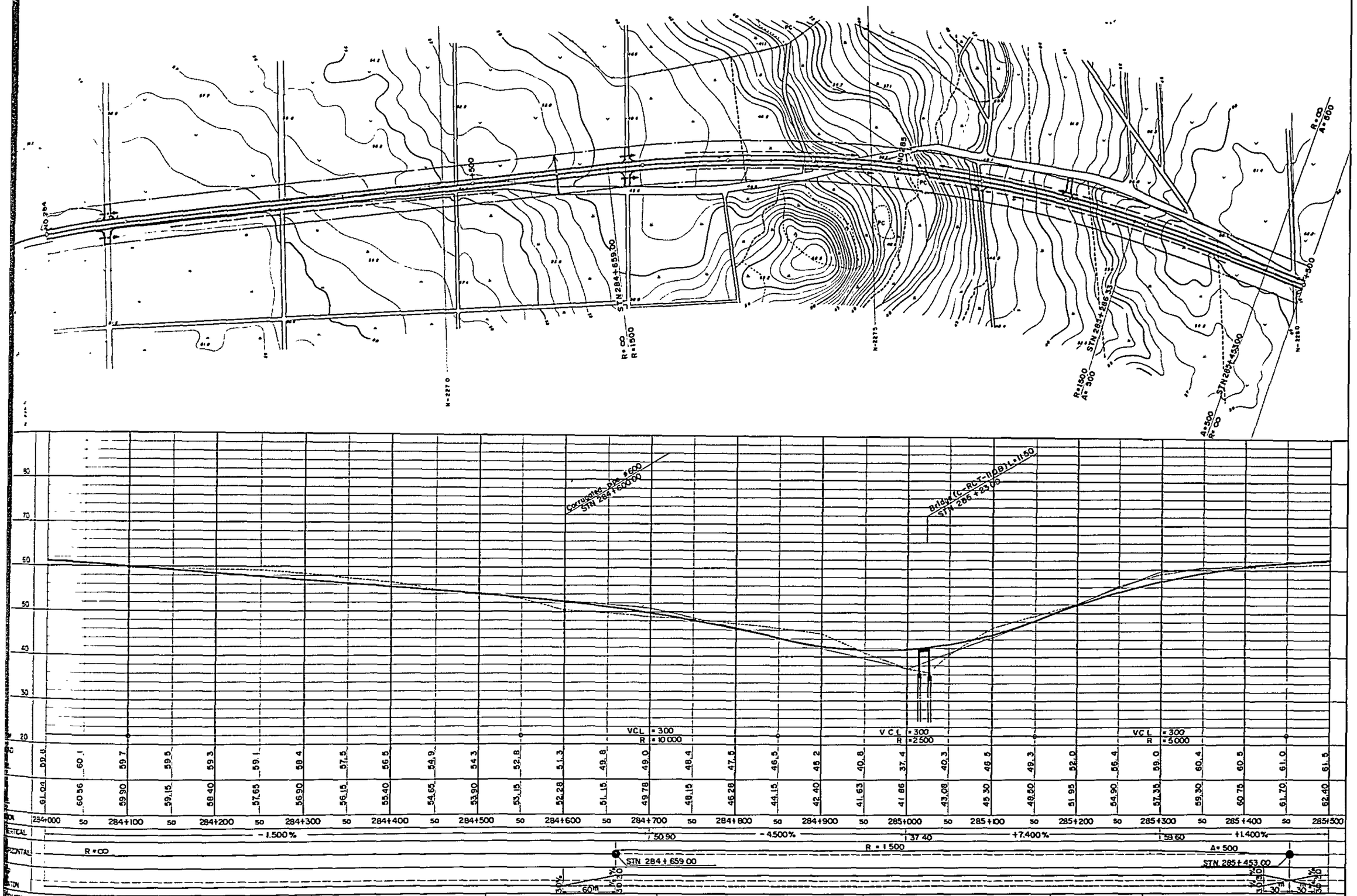

SOUTHERN COASTAL LINK ROAD SECTION 4 KIRANJERANGE —— LINDI NO LONGITUDINAL SECTION STN Km 284+000 TO STN Km 285+500 MINISTRY OF WORKS	NOTES	REVISIONS	ROADS DIVISION DIRECTOR OF ROADS ..... DATE ..... MW, DRG. No.	SCALES HORIZONTAL 1 : 2,000 VERTICAL 1 : 400	DRG. No. DATE SHEET 193 OF 269

188 | 189 | 190

PLAN SCALE 1 : 2,000

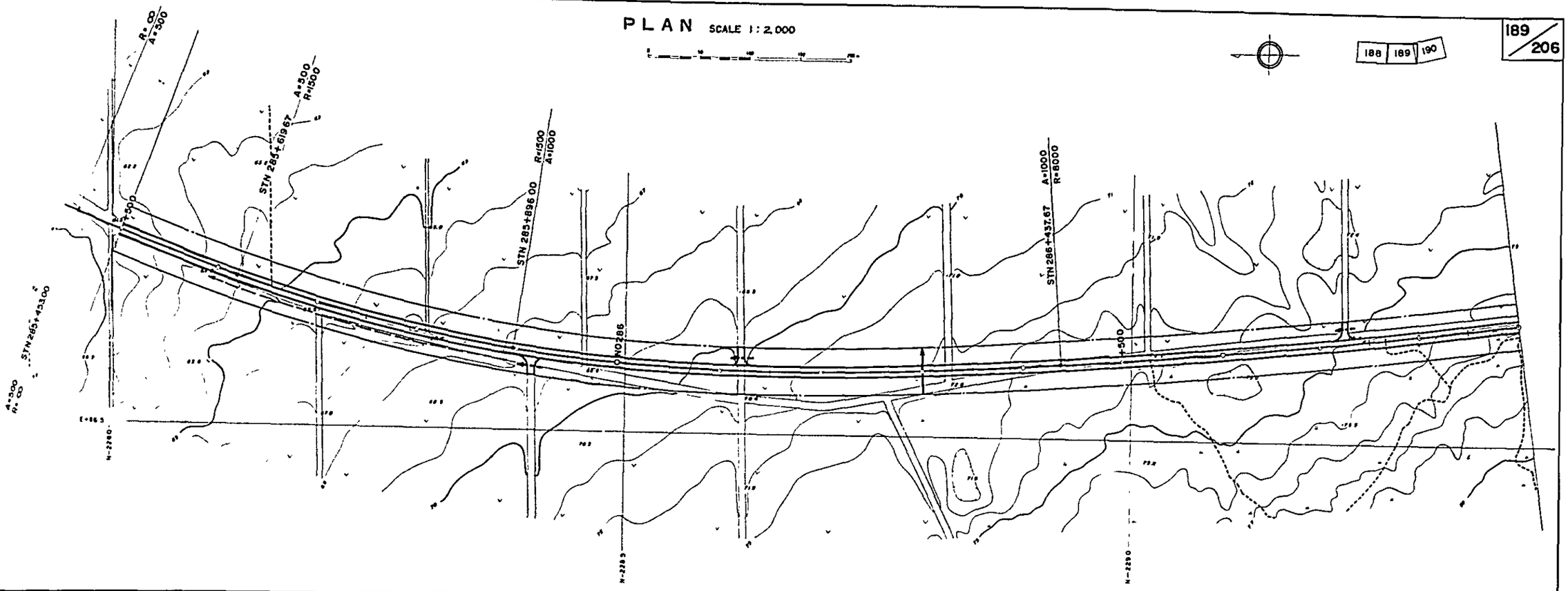

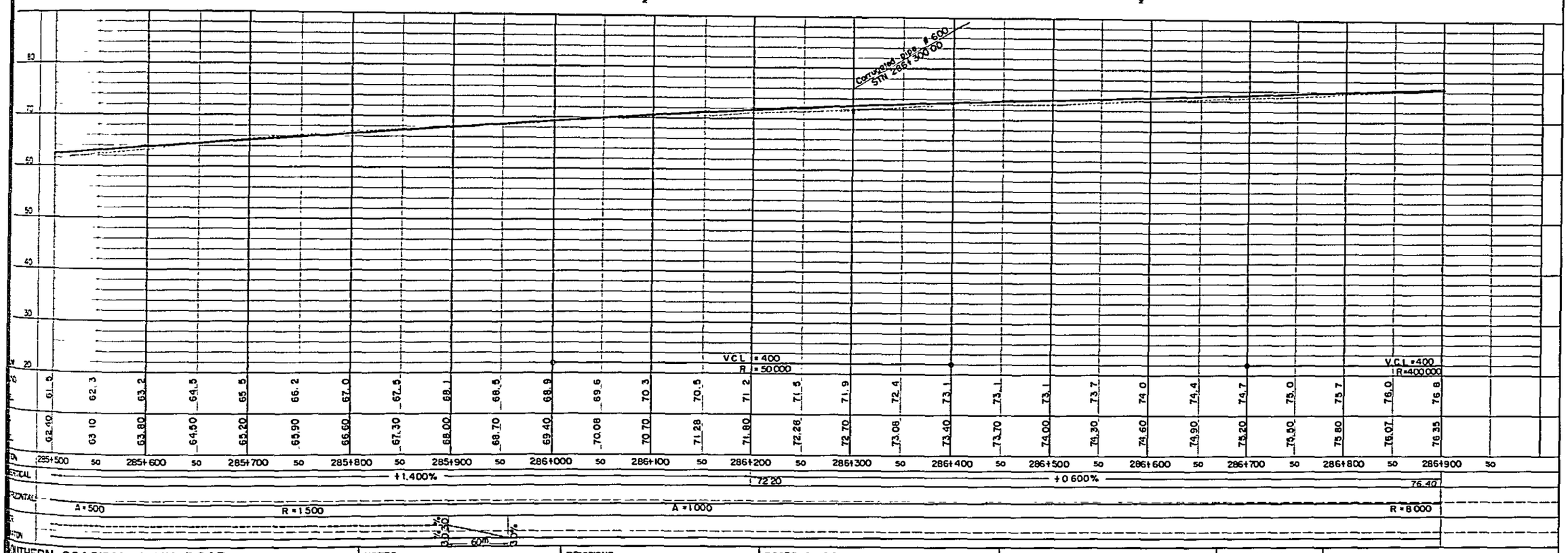

SOUTHERN COASTAL LINK ROAD SECTION 4 KIRANJERANGE —— LINDI PLAN AND LONGITUDINAL SECTION STN Km 285+500 TO STN Km 286+900 MINISTRY OF WORKS	NOTES	REVISIONS	ROADS DIVISION DIRECTOR OF ROADS ..... DATE ..... MW. DRG. No.	SCALES HORIZONTAL 1 : 2,000 VERTICAL 1 : 400	DRG. No. DATE SHEET 194 OF 269

PLAN SCALE 1:2,000

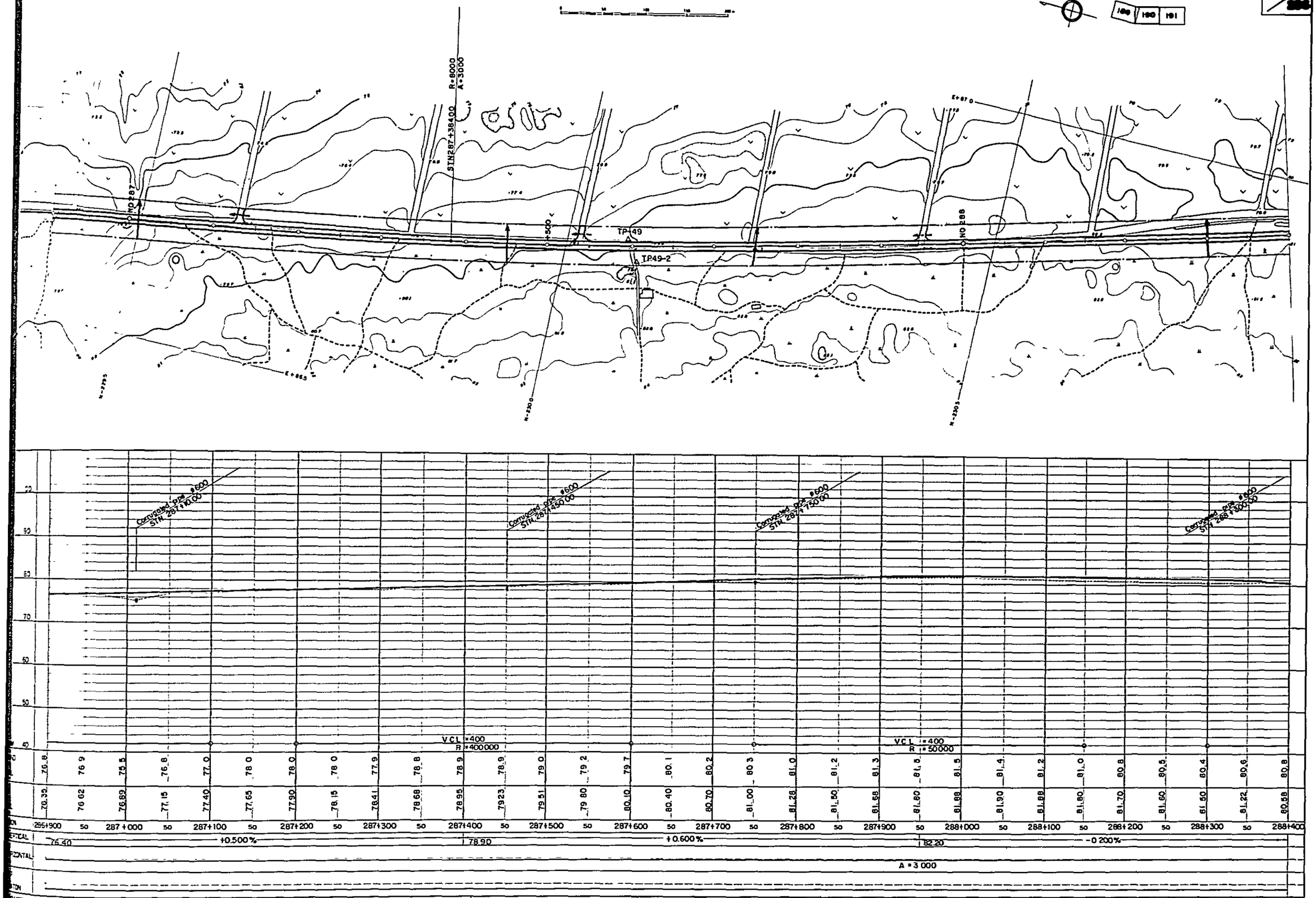

SOUTHERN COASTAL LINK ROAD SECTION 4 KIRANJERANGE — LINDI PLAN AND LONGITUDINAL SECTION STN Km 286+900 TO STN Km 288+400 MINISTRY OF WORKS	NOTES	REVISIONS	ROADS DIVISION DIRECTOR OF ROADS ..... DATE ..... MW, DRG. No.	SCALES HORIZONTAL 1:2,000 VERTICAL 1:400	DRG. No. DATE SHEET 195 OF 269

PLAN SCALE 1:2,000

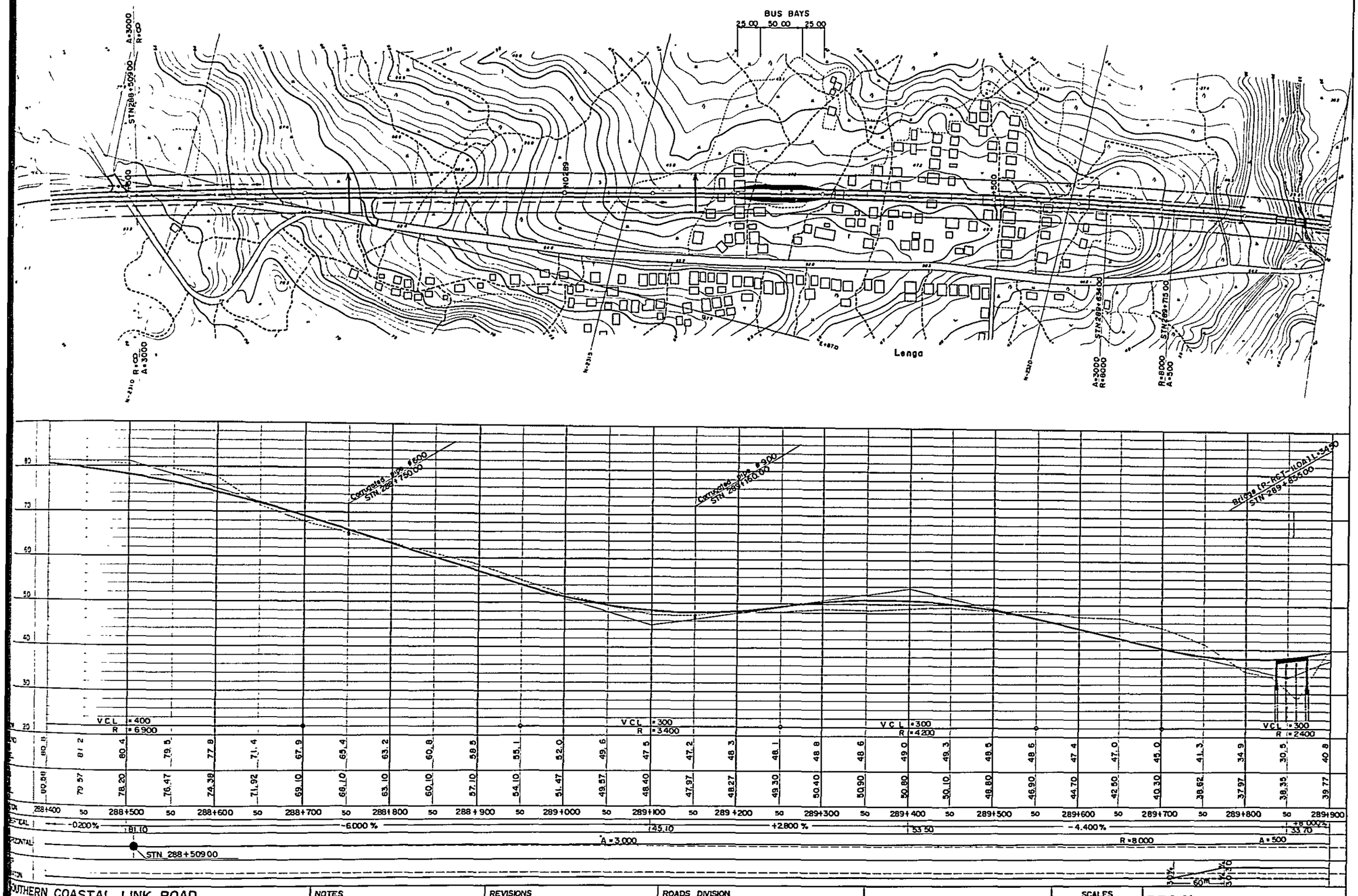

SOUTHERN COASTAL LINK ROAD SECTION 4 KIRANJERANGE —— LINDI PROFILE LONGITUDINAL SECTION STN Km 288+400 TO STN Km. 289+900 MINISTRY OF WORKS	NOTES	REVISIONS	ROADS DIVISION DIRECTOR OF ROADS ..... DATE ..... MW, DRG. No.	SCALES HORIZONTAL 1:2.000 VERTICAL 1:400	DRG. No. DATE SHEET 196 OF 269

PLAN SCALE 1:2,000

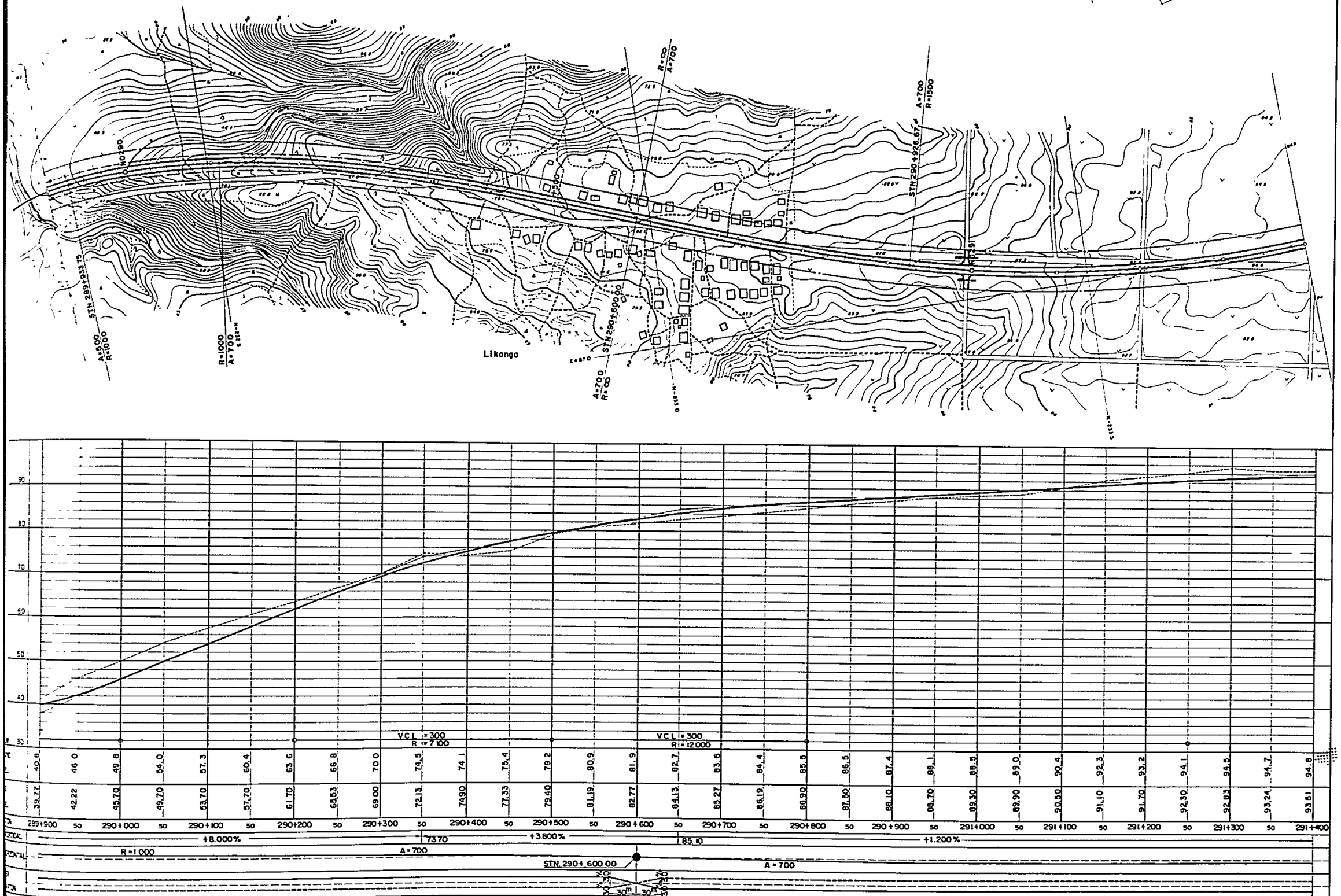

SOUTHERN COASTAL LINK ROAD
SECTION 4 · KIRANJERANGE —— LINDI
PROFILE LONGITUDINAL SECTION STN Km 289+.00 TO STN Km 291+400
MINISTRY OF WORKS

NOTES

REVISIONS

ROADS DIVISION
DIRECTOR OF ROADS .....
DATE .....
MW, DRG. No.

SCALES
HORIZONTAL 1:2,000
VERTICAL 1:400

DRG. No.
DATE
SHEET 197 OF 269

192 | 193 | 194

PLAN SCALE 1:2,000

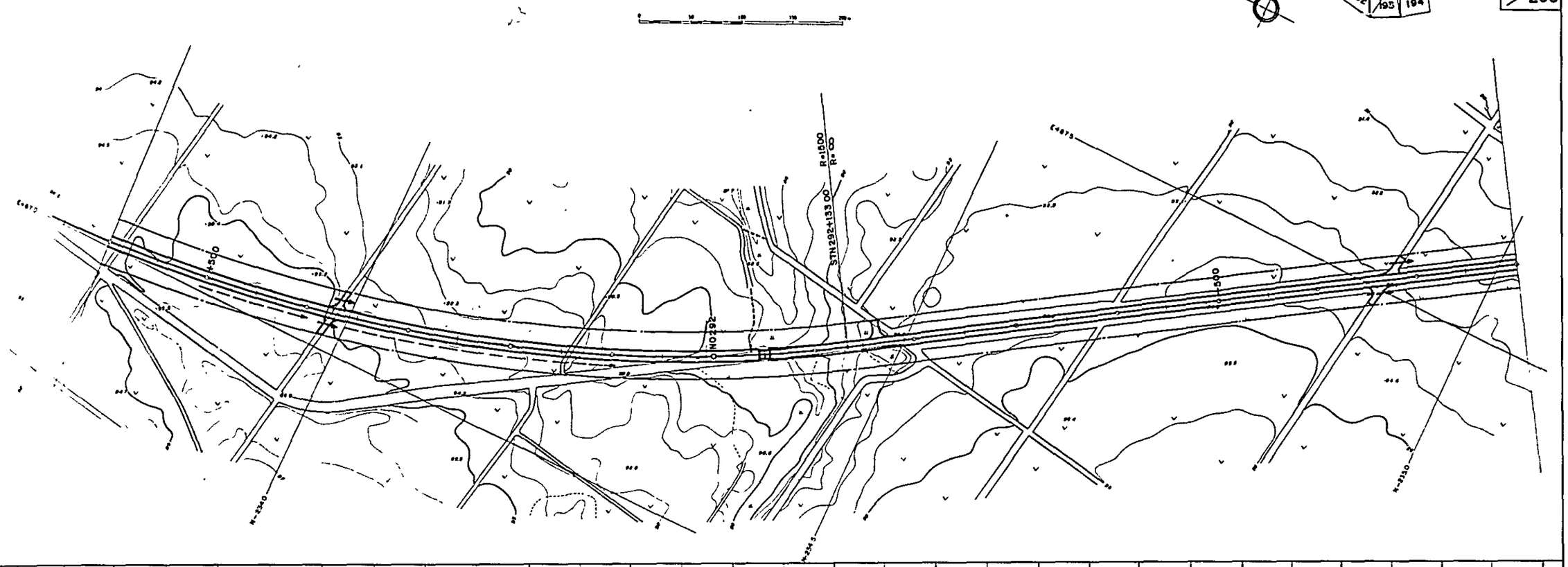

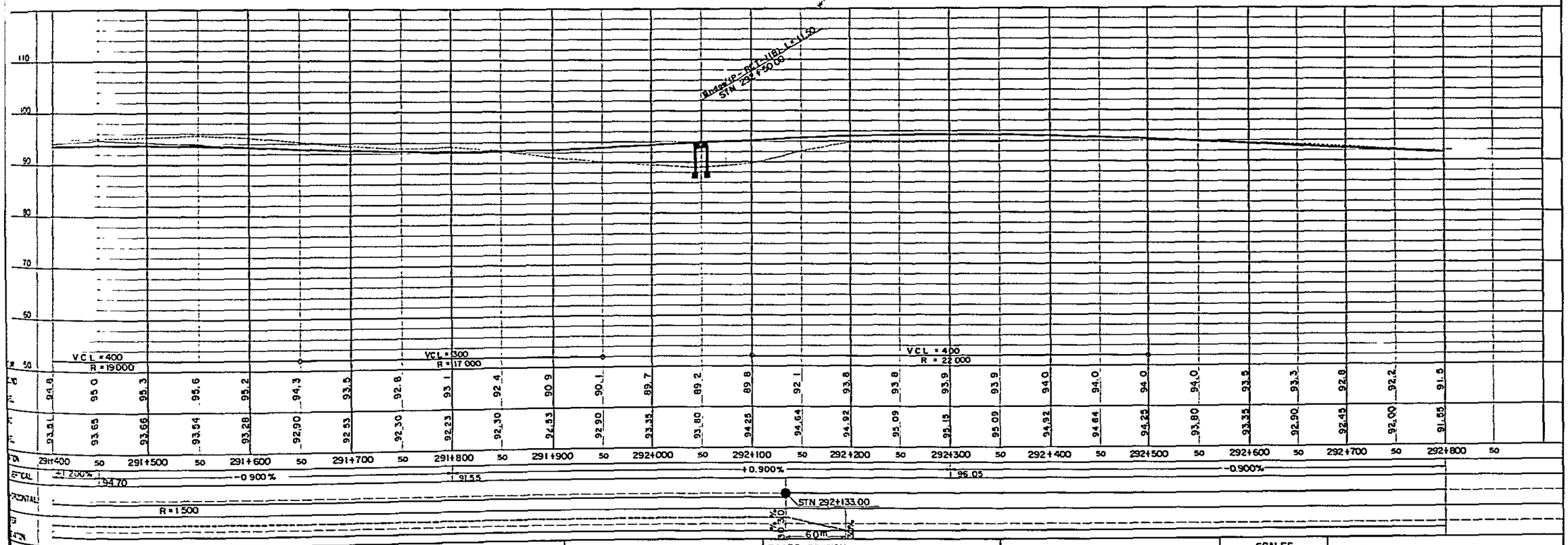

SOUTHERN COASTAL LINK ROAD SECTION 4 KIRANJERANGE —— LINDI PROFILE LONGITUDINAL SECTION STN.Km 291+400 TO STN.Km 292+800 MINISTRY OF WORKS	NOTES	REVISIONS	ROADS DIVISION DIRECTOR OF ROADS ..... DATE ..... MW. DRG. No.	SCALES HORIZONTAL 1:2,000 VERTICAL 1:400	DRG.No. DATE SHEET 198 OF 269

PLAN SCALE 1:2,000

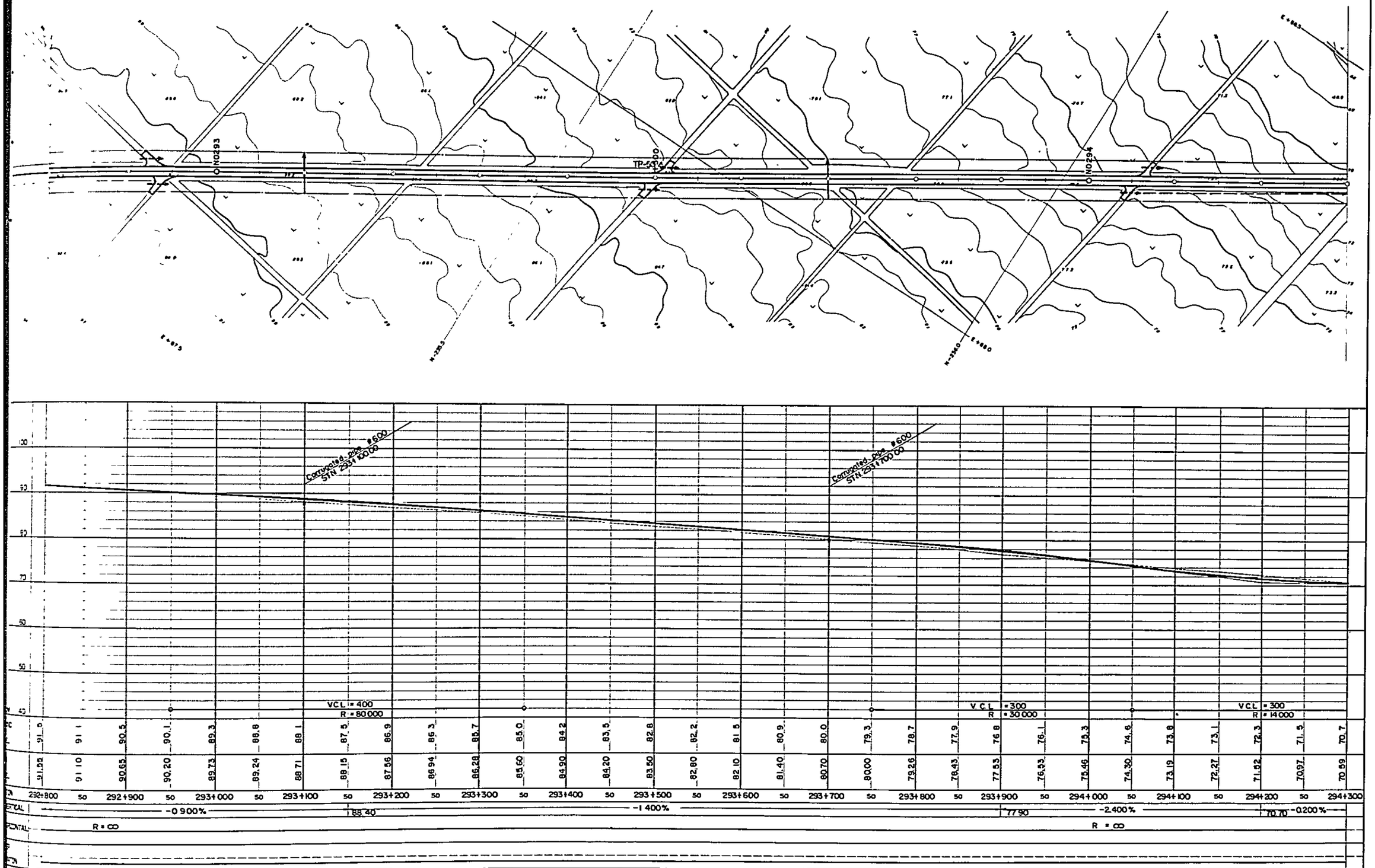

SOUTHERN COASTAL LINK ROAD SECTION 4 KIRANJERANGE —— LINDI PROFILE LONGITUDINAL SECTION STN Km 292+800 TO STN Km 294+300 MINISTRY OF WORKS	NOTES	REVISIONS	ROADS DIVISION DIRECTOR OF ROADS ..... DATE ..... MW, DRG. No.
SCALES HORIZONTAL 1:2,000 VERTICAL 1:400	DRG. No.		
	DATE		
	SHEET 199 OF 269		

PLAN SCALE 1:2,000

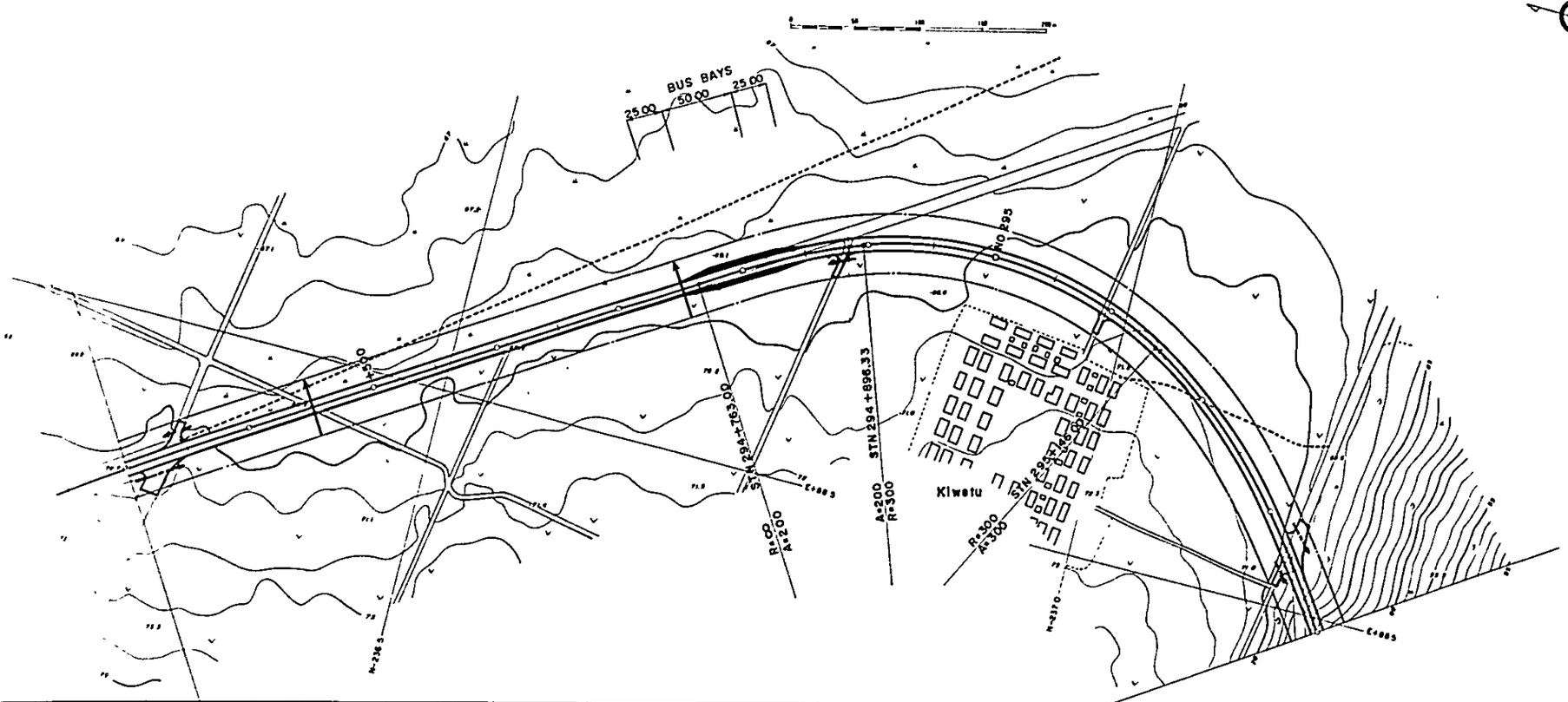

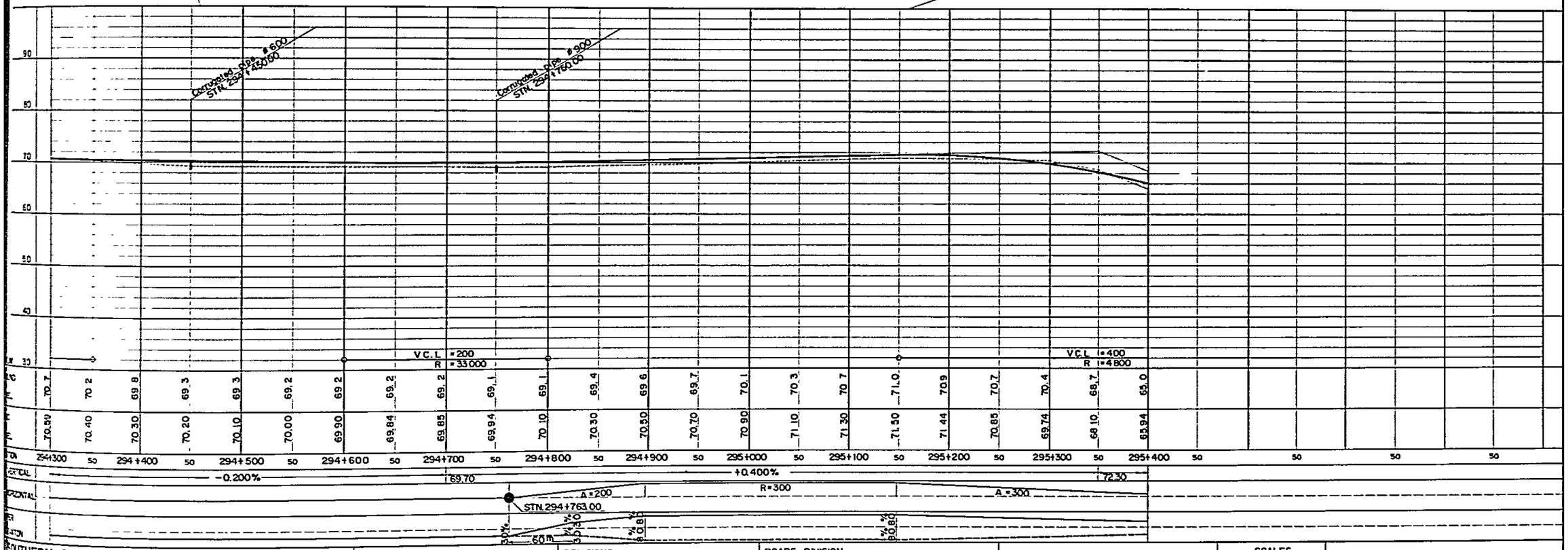

SOUTHERN COASTAL LINK ROAD
SECTION 4 KIRANJERANGE — LINDI
PLAN AND LONGITUDINAL SECTION STN Km 294+300 TO STN Km 295+400
MINISTRY OF WORKS

NOTES

REVISIONS

ROADS DIVISION
DIRECTOR OF ROADS .....
DATE .....
MW, DRG. No.

SCALES
HORIZONTAL 1:2,000
VERTICAL 1:400

DRG. No.
DATE
SHEET 200 OF 269

PLAN SCALE 1:2,000

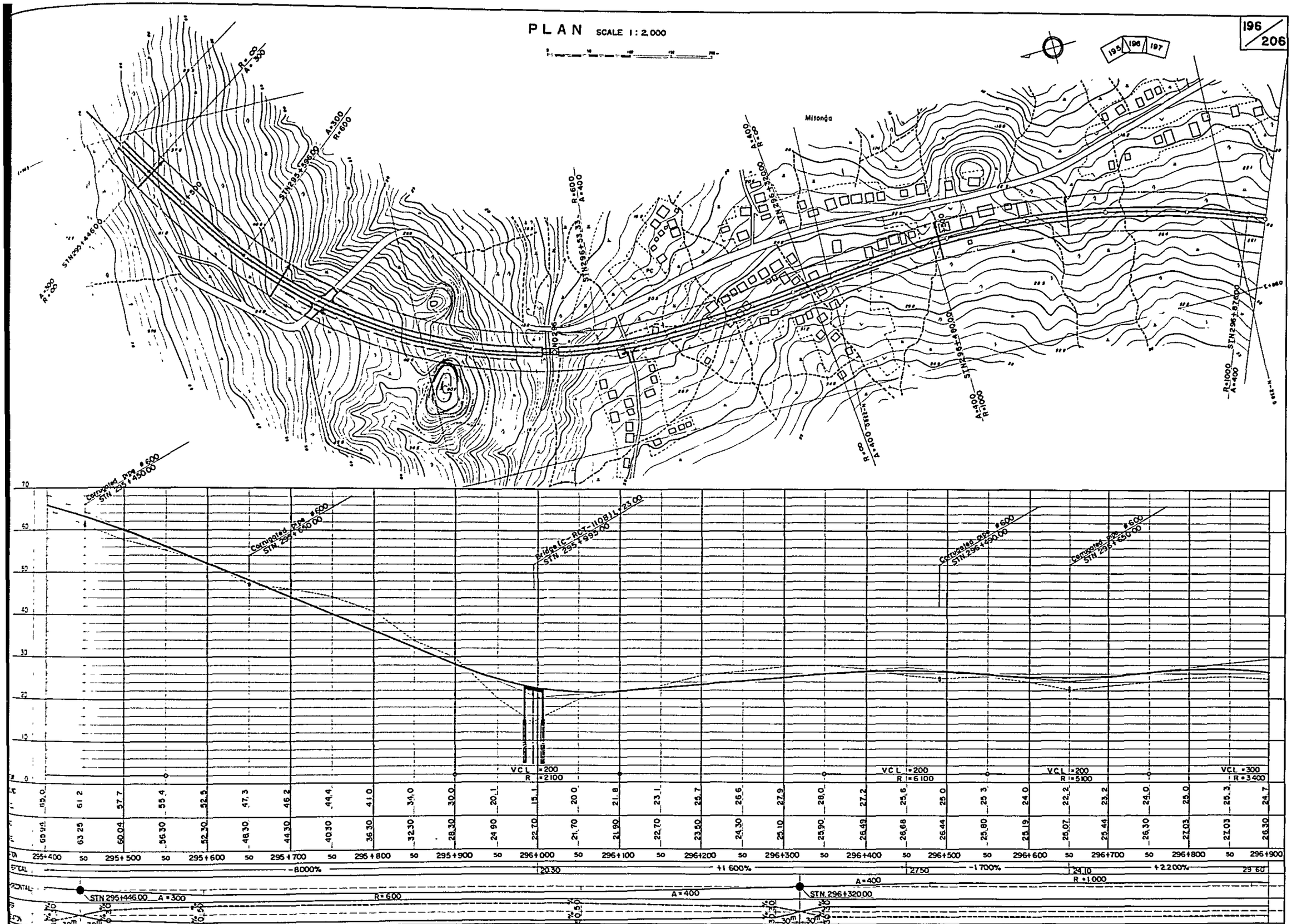

SOUTHERN COASTAL LINK ROAD

SECTION 4 KIRANJERANGE —— LINDI

PROFILE LONGITUDINAL SECTION STN Km 295+400 TO STN Km 296+900

MINISTRY OF WORKS

NOTES

REVISIONS

ROADS DIVISION

DIRECTOR OF ROADS .....

DATE .....

MW, DRG. No.

SCALES

HORIZONTAL 1:2.000

VERTICAL 1:400

DRG. No.

DATE

SHEET 201 OF 269

PLAN SCALE 1:2,000

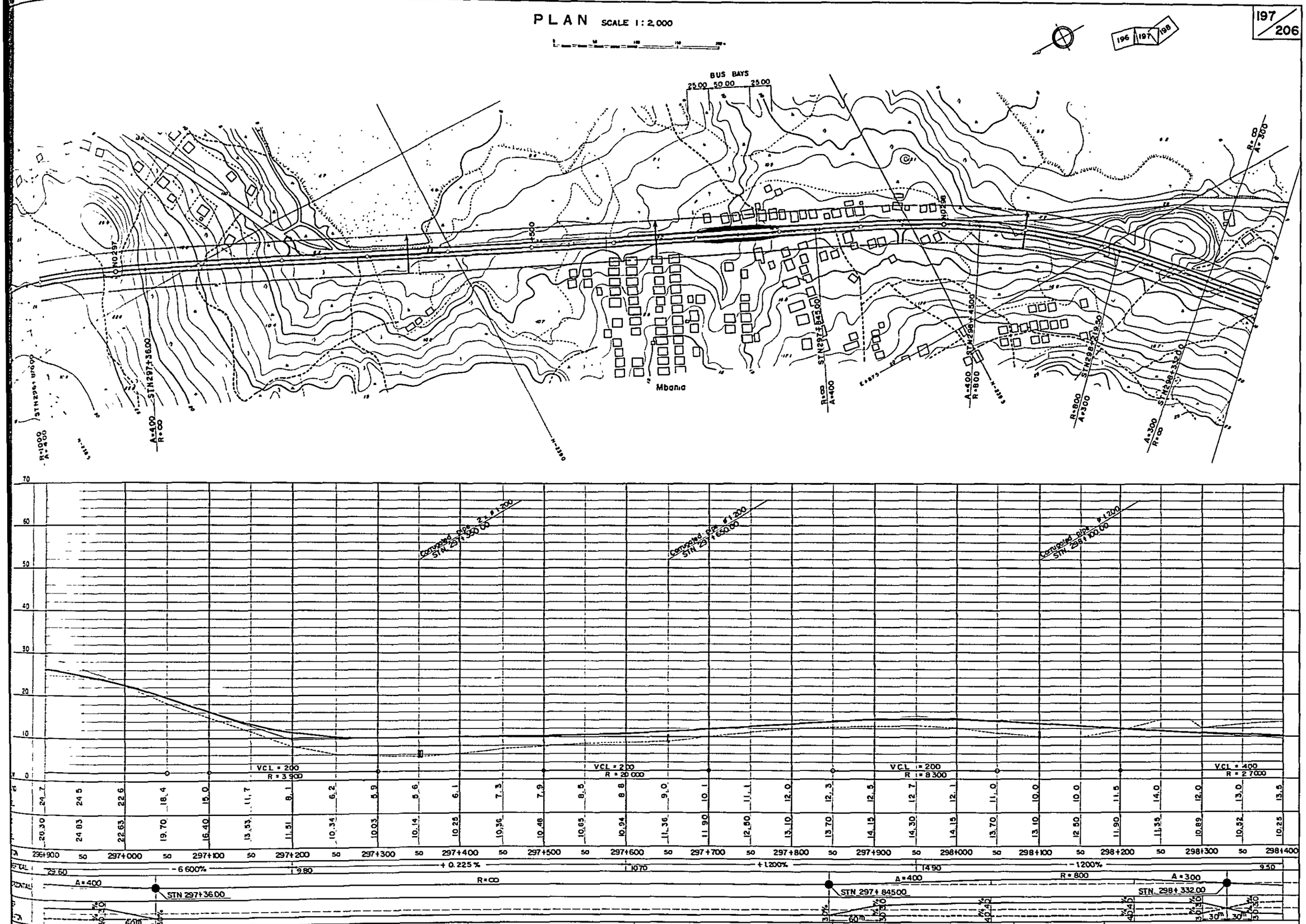

SOUTHERN COASTAL LINK ROAD
STN 4 KIRANJERANGE — LINDI
PF LONGITUDINAL SECTION STN Km 296+900 TO STN Km 298+400
MINISTRY OF WORKS

NOTES

REVISIONS

ROADS DIVISION
DIRECTOR OF ROADS .....
DATE .....
MW. DRG. No.

SCALES
HORIZONTAL 1:2.000
VERTICAL 1:400

DRG. No.
DATE
SHEET 202 OF 269

PLAN SCALE 1:2,000

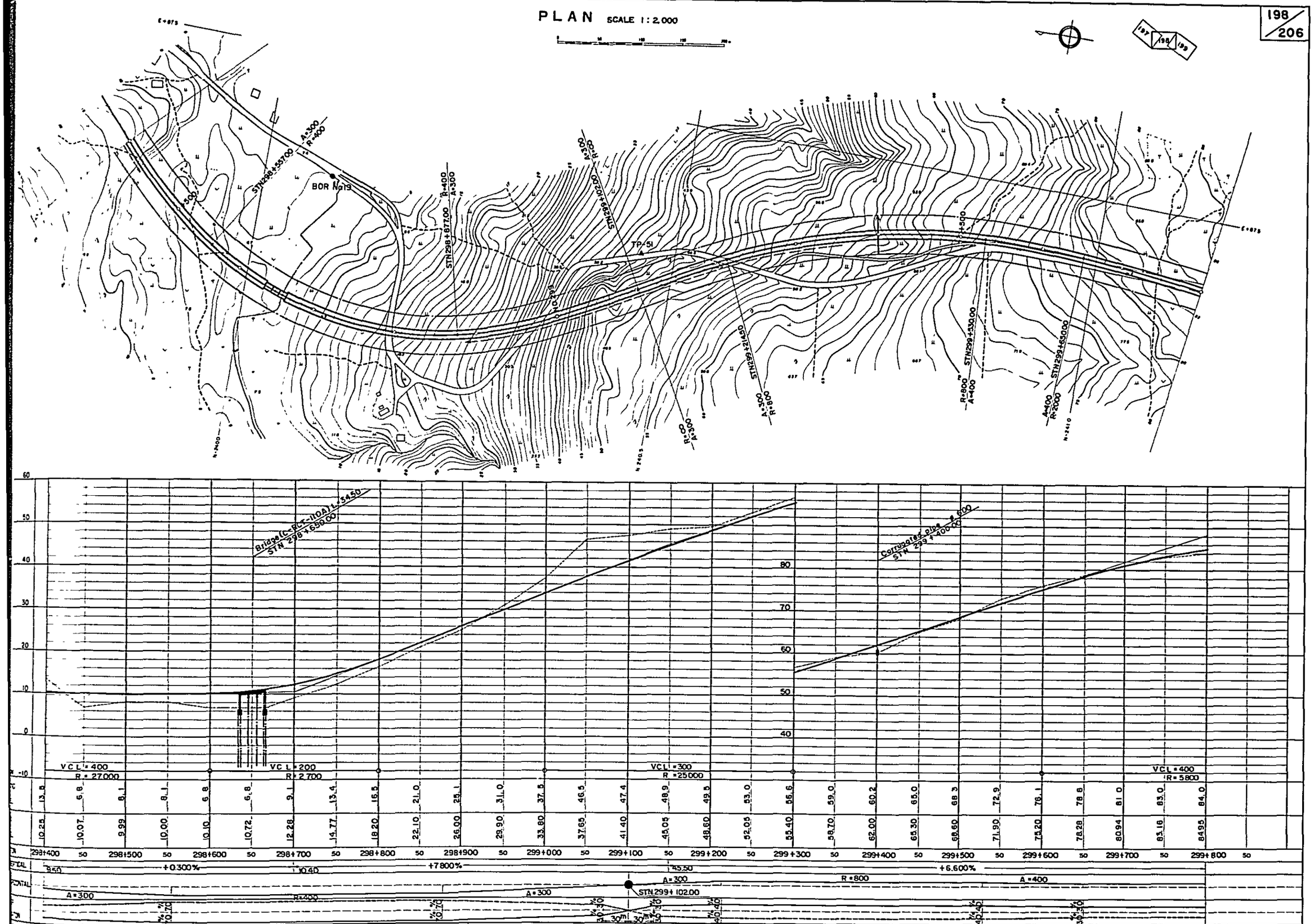

SOUTHERN COASTAL LINK ROAD
ON4 KIRANJERANGE —— LINDI
PROFILE LONGITUDINAL SECTION STN.Km 298+400 TO STN.Km. 299+800
MINISTRY OF WORKS

NOTES

REVISIONS

ROADS DIVISION
DIRECTOR OF ROADS .....
DATE .....
MW. DRG. No.

SCALES
HORIZONTAL 1:2,000
VERTICAL 1:400

DRG. No.
DATE
SHEET 203 OF 269

PLAN SCALE 1:2,000

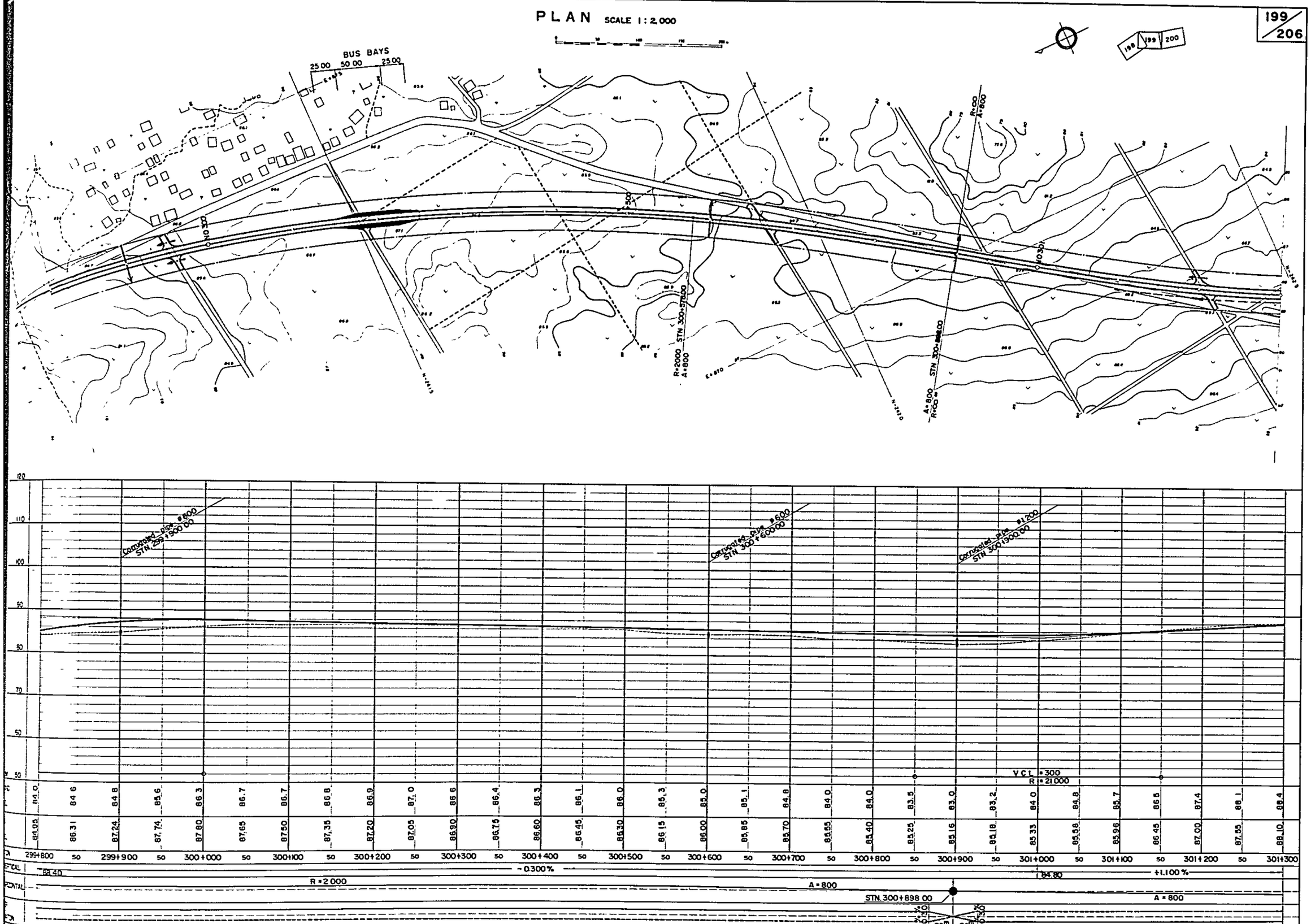

STN	299+800	50	299+900	50	300+000	50	300+100	50	300+200	50	300+300	50	300+400	50	300+500	50	300+600	50	300+700	50	300+800	50	300+900	50	301+000	50	301+100	50	301+200	50	301+300
	84.0		84.6		84.8		85.6		86.3		86.7		86.7		86.8		86.9		87.0		86.6		86.4		86.3		86.1		86.0		85.3
	84.02		86.31		87.24		87.74		87.80		87.65		87.50		87.35		87.20		87.05		86.90		86.75		86.60		86.45		86.30		86.15

STN	85.0	85.1	84.8	84.0	84.0	83.5	83.0	83.2	84.0	84.8	85.7	86.5	87.4	88.1	88.4
	86.00	85.85	85.70	85.55	85.40	85.25	85.16	85.18	85.33	85.58	85.96	86.45	87.00	87.55	88.10

SOUTHERN COASTAL LINK ROAD SECTION 4 KIRANJERANGE —— LINDI PROFILE LONGITUDINAL SECTION STN Km 299+800 TO STN Km. 301+300 MINISTRY OF WORKS	NOTES	REVISIONS	ROADS DIVISION DIRECTOR OF ROADS ..... DATE ..... MW, DRG. No.	SCALES HORIZONTAL 1:2,000 VERTICAL 1:400
DRG. No. DATE SHEET 204 OF 269				

PLAN SCALE 1:2,000

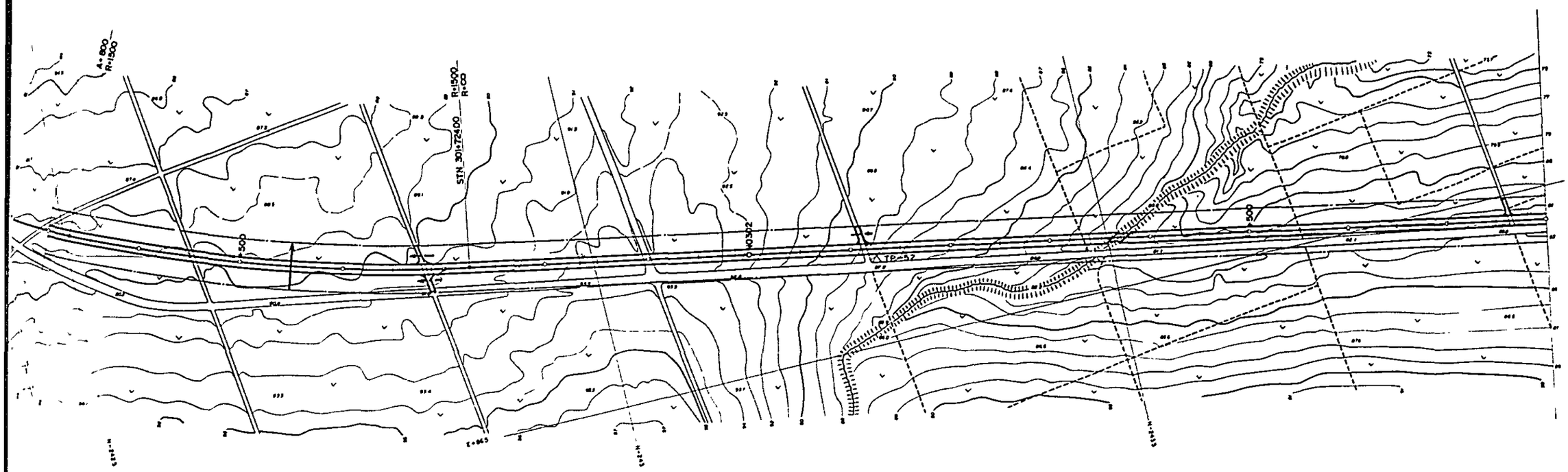

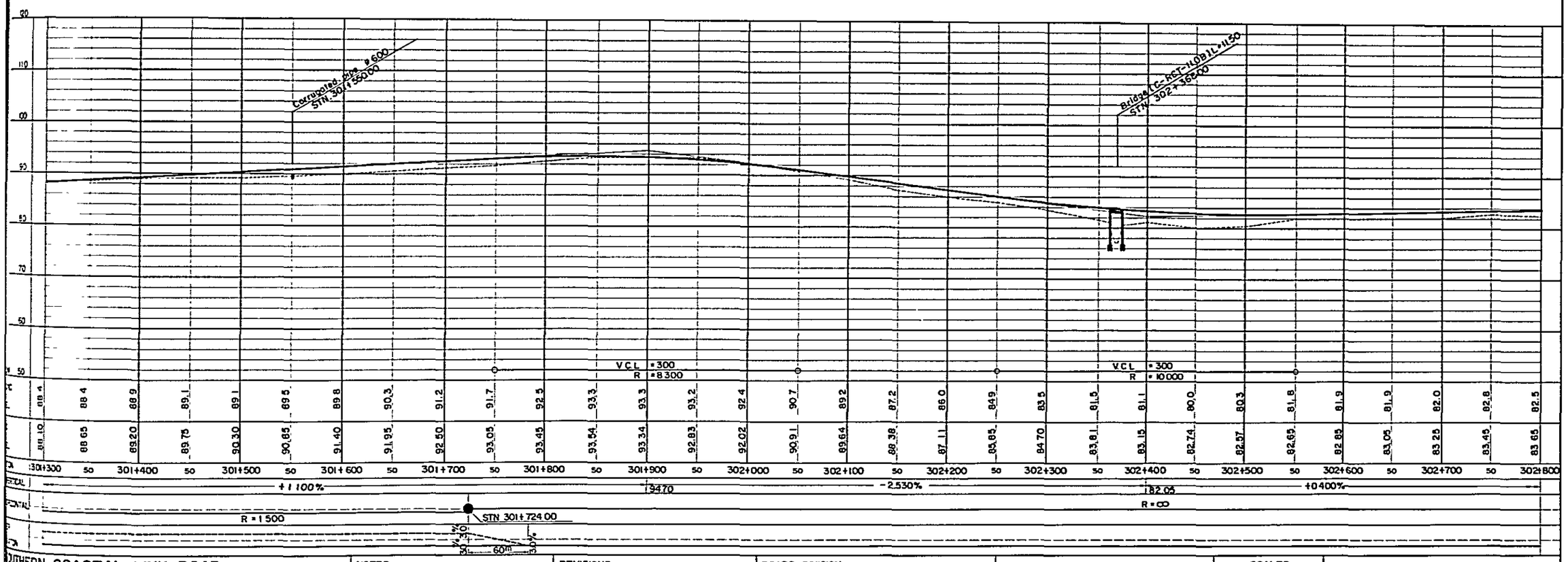

SOUTHERN COASTAL LINK ROAD SECTION 4 KIRANJERANGE — LINDI PLAN & LONGITUDINAL SECTION STN Km 301+300 TO STN Km 302+800 MINISTRY OF WORKS	NOTES	REVISIONS	ROADS DIVISION DIRECTOR OF ROADS ..... DATE ..... MW, DRG. No.	SCALES HORIZONTAL 1:2,000 VERTICAL 1:400	DRG. No. DATE SHEET 205 OF 269

PLAN SCALE 1 : 2,000

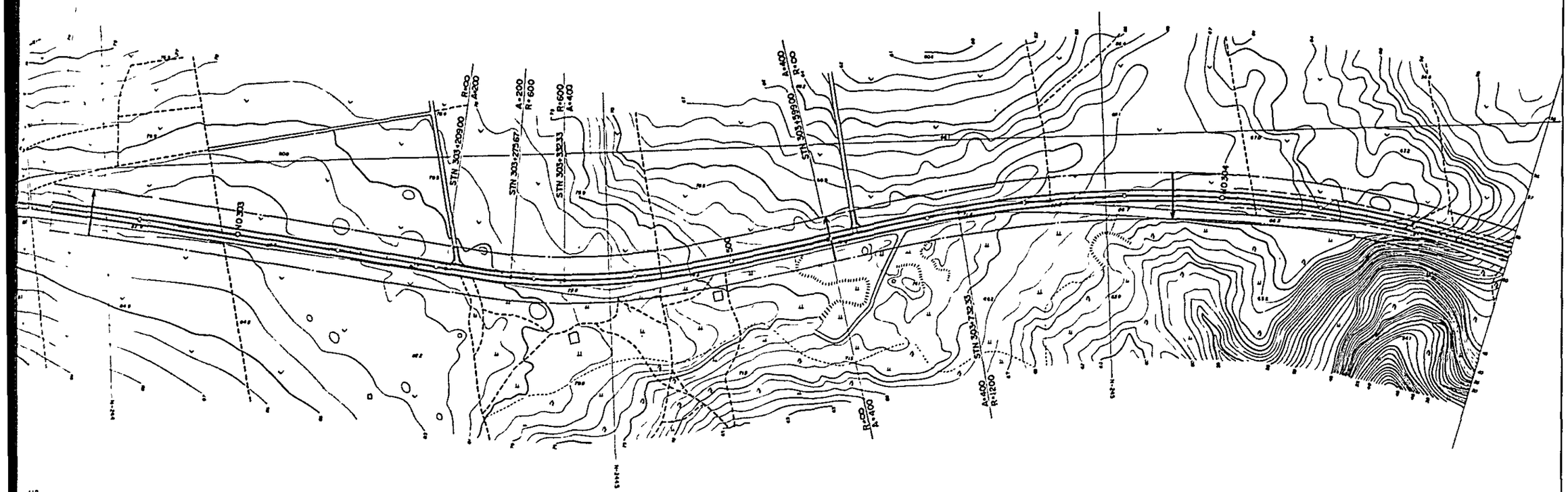

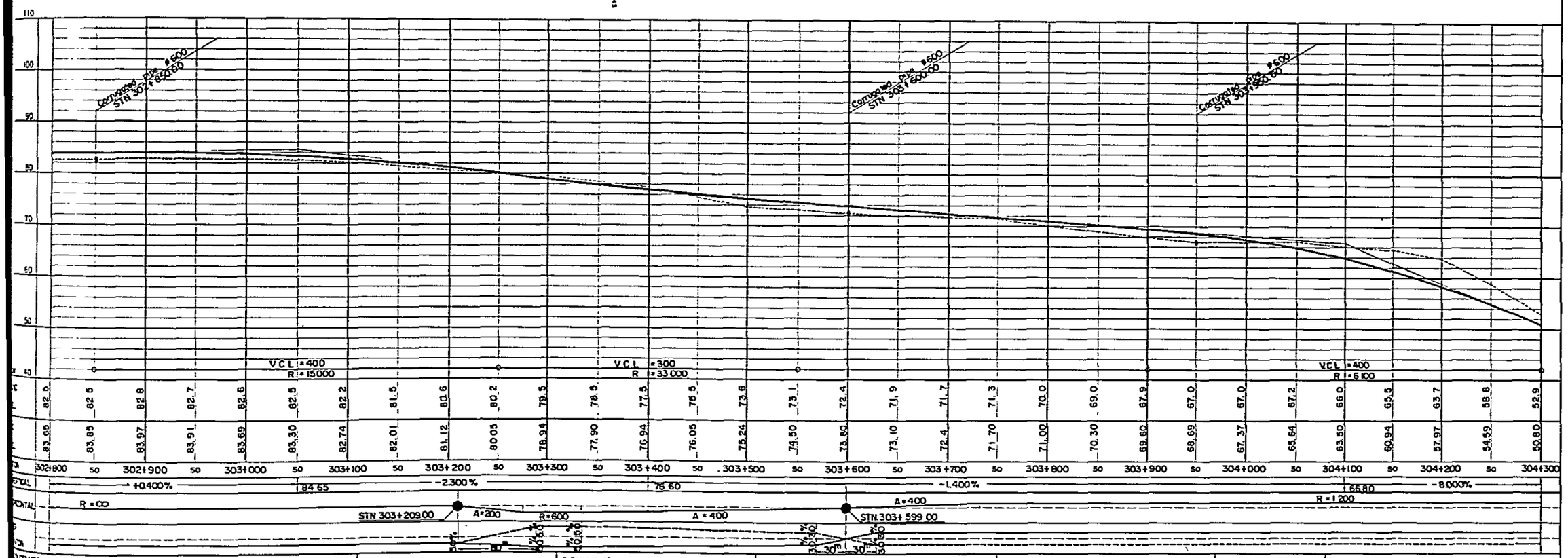

SOUTHERN COASTAL LINK ROAD CH4 KIRANJERANGE — LINDI LONGITUDINAL SECTION STN.Km 302+800 TO STN.Km 304+300 MINISTRY OF WORKS	NOTES	REVISIONS	ROADS DIVISION DIRECTOR OF ROADS ..... DATE ..... MW, DRG. No.	SCALES HORIZONTAL 1 : 2,000 VERTICAL 1 : 400	DRG.No. DATE SHEET 206 OF 269

PLAN SCALE 1:2,000

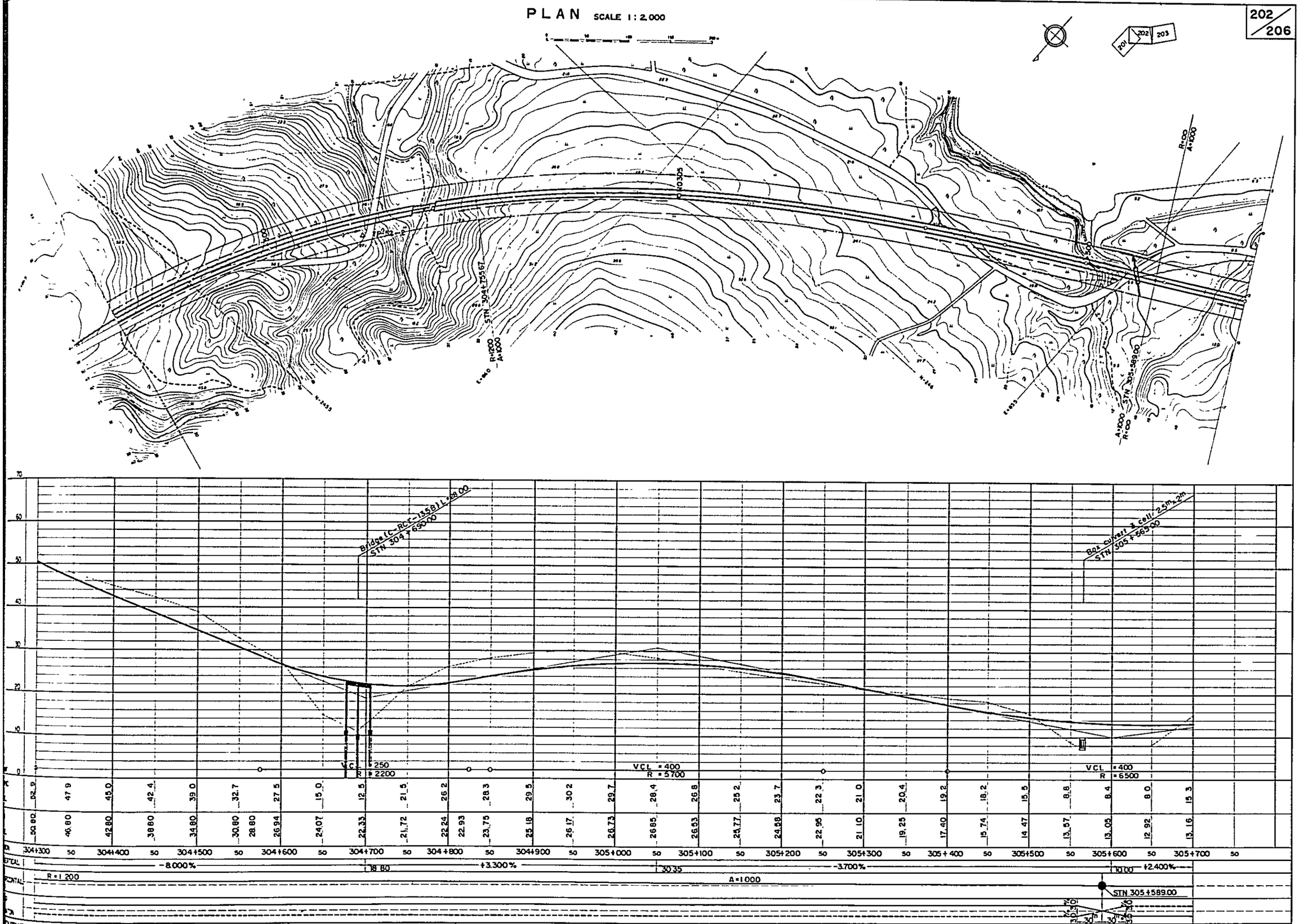

SOUTHERN COASTAL LINK ROAD CN4 KIRANJERANGE — LINDI LONGITUDINAL SECTION STN.Km 304+300 TO STN.Km. 305+700 MINISTRY OF WORKS	NOTES	REVISIONS	ROADS DIVISION DIRECTOR OF ROADS ..... DATE ..... MW. DRG. No.		SCALES HORIZONTAL 1:2.000 VERTICAL 1:400	DRG.No. DATE SHEET 207 OF 269

PLAN SCALE 1:2,000

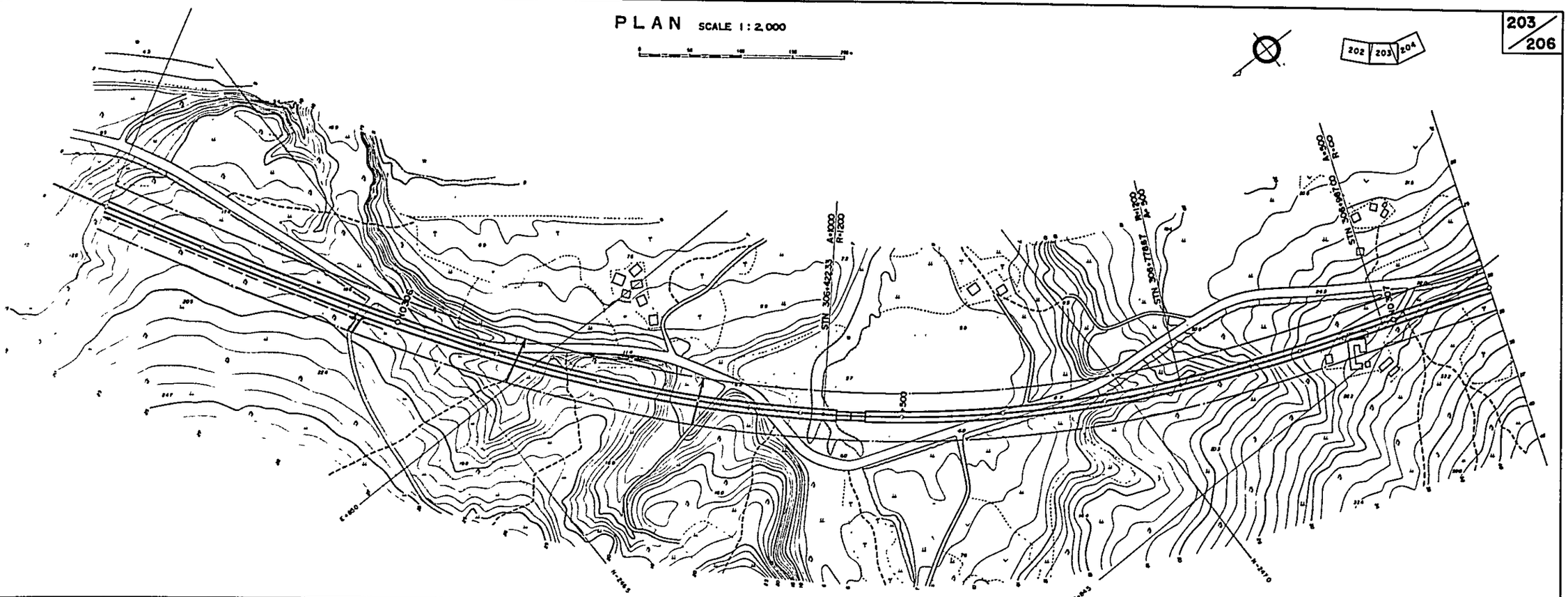

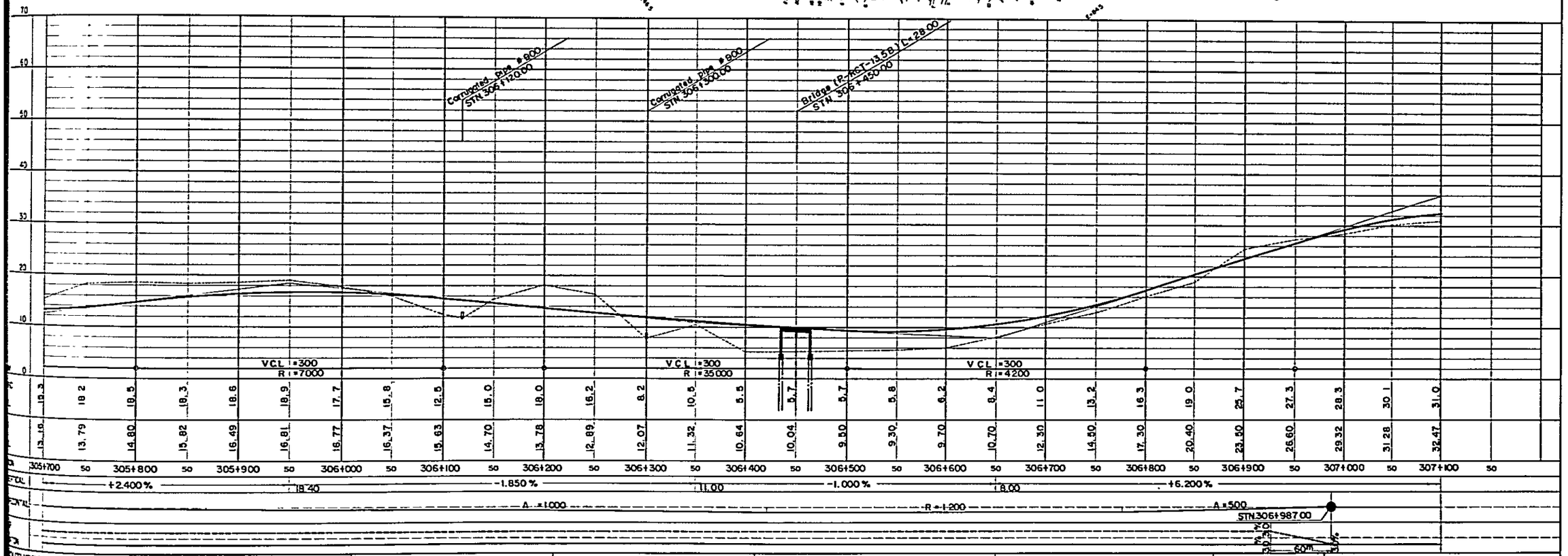

SOUTHERN COASTAL LINK ROAD ROUTE 014 KIRANJERANGE——LINDI PROFILE LONGITUDINAL SECTION STN.Km 305+700 TO STN.Km. 307+100 MINISTRY OF WORKS	NOTES	REVISIONS	ROADS DIVISION DIRECTOR OF ROADS ..... DATE ..... MW. DRG. No.	SCALES HORIZONTAL 1:2,000 VERTICAL 1:400	DRG. No. DATE SHEET 208 OF 269

PLAN SCALE 1 : 2,000

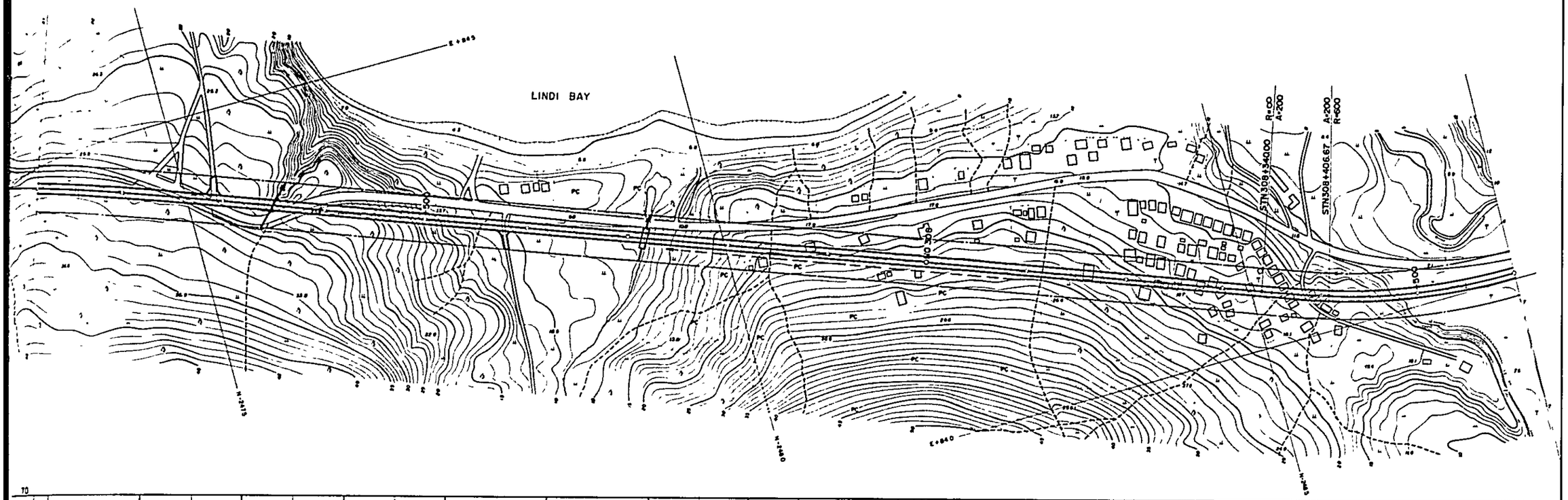

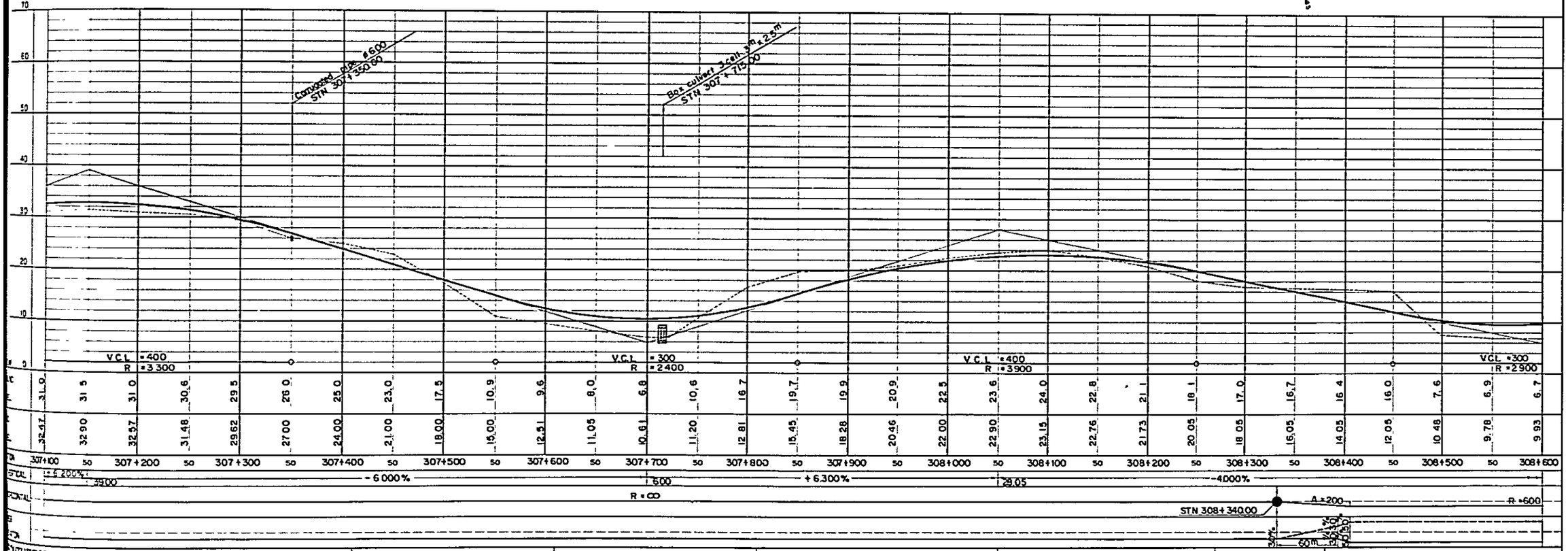

SOUTHERN COASTAL LINK ROAD SECTION 4 KIRANJERANGE — LINDI PLAN & LONGITUDINAL SECTION STN Km 307+100 TO STN Km 308+600 MINISTRY OF WORKS	NOTES	REVISIONS	ROADS DIVISION DIRECTOR OF ROADS . . . . . . DATE . . . . . . MW. DRG. No.	SCALES HORIZONTAL 1 : 2,000 VERTICAL 1 : 400

DRG. No.
DATE
SHEET 209 OF 269

PLAN SCALE 1:2,000

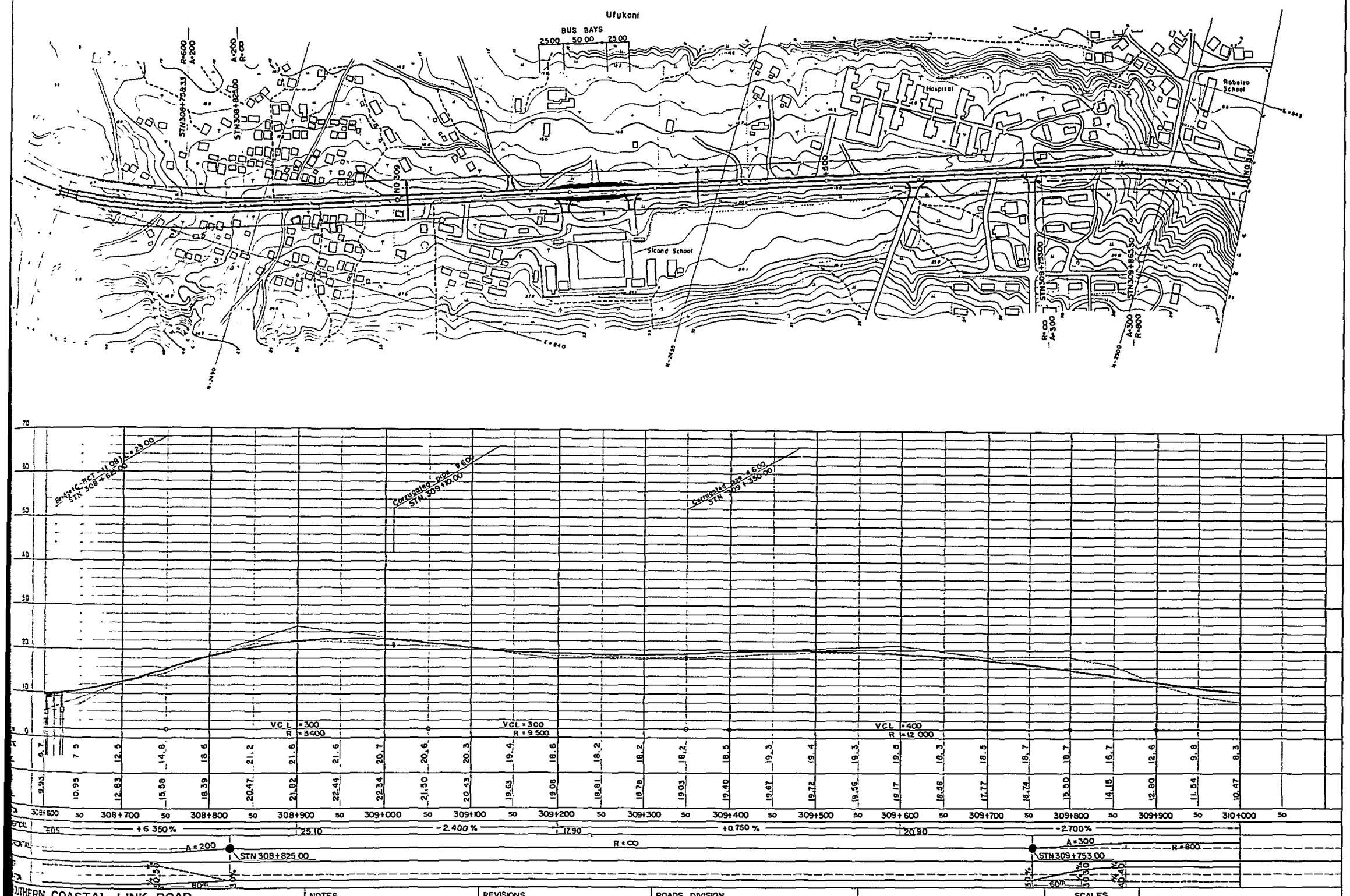

SOUTHERN COASTAL LINK ROAD STN KIRANJERANGE — LINDI PROFILE LONGITUDINAL SECTION STN Km 308+600 TO STN Km 310+000 MINISTRY OF WORKS	NOTES	REVISIONS	ROADS DIVISION DIRECTOR OF ROADS ..... DATE ..... MW. DRG. No.	SCALES HORIZONTAL 1:2,000 VERTICAL 1:400	DRG. No. DATE SHEET 210 OF 269

PLAN SCALE 1:2,000

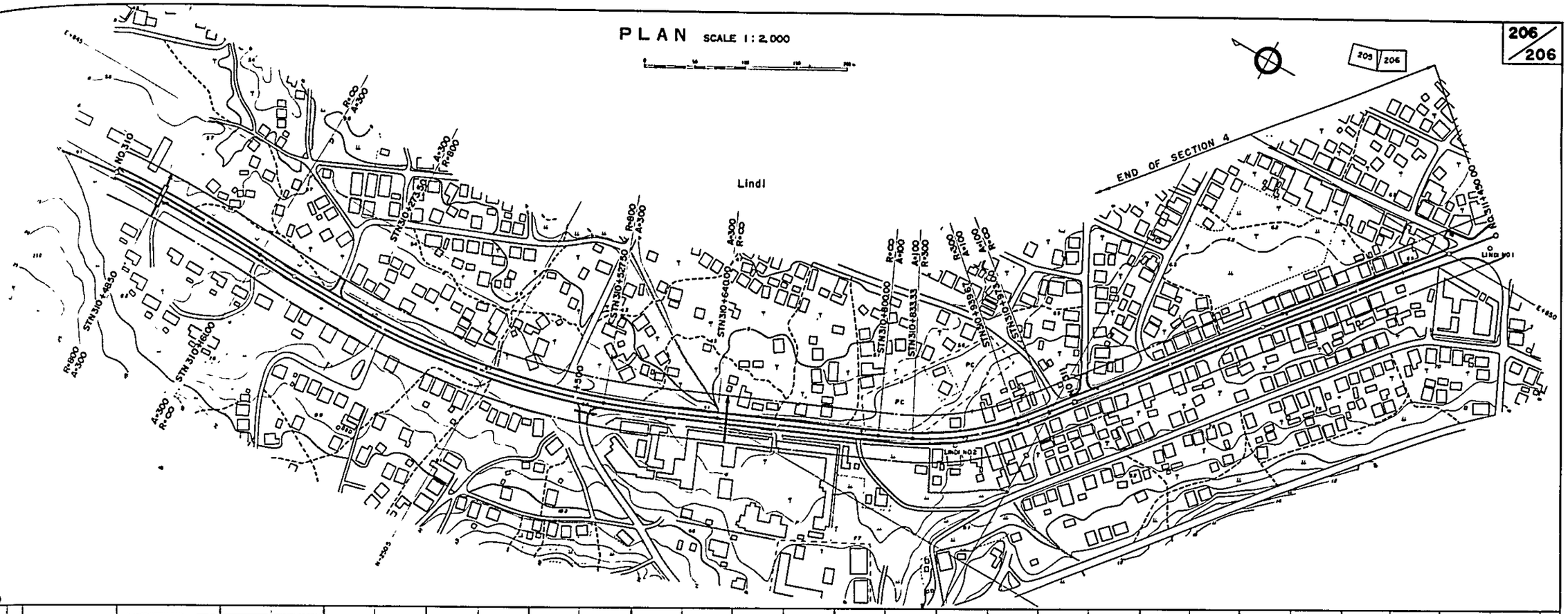

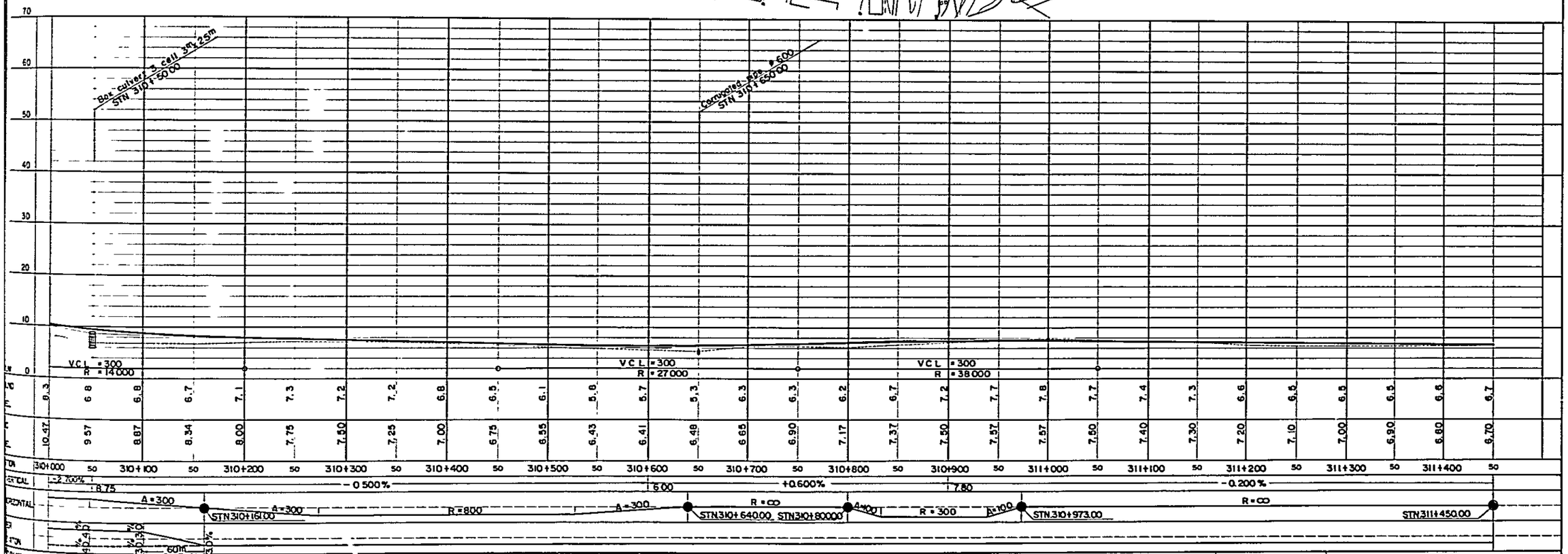

SOUTHERN COASTAL LINK ROAD SECTION 4 KIRANJERANGE —— LINDI PLAN AND LONGITUDINAL SECTION STN Km 310+000 TO STN Km 311+450 MINISTRY OF WORKS	NOTES	REVISIONS	ROADS DIVISION DIRECTOR OF ROADS ..... DATE ..... MW, DRG. No.	SCALES HORIZONTAL 1:2,000 VERTICAL 1:400
				DRG. No. DATE SHEET 211 OF 269

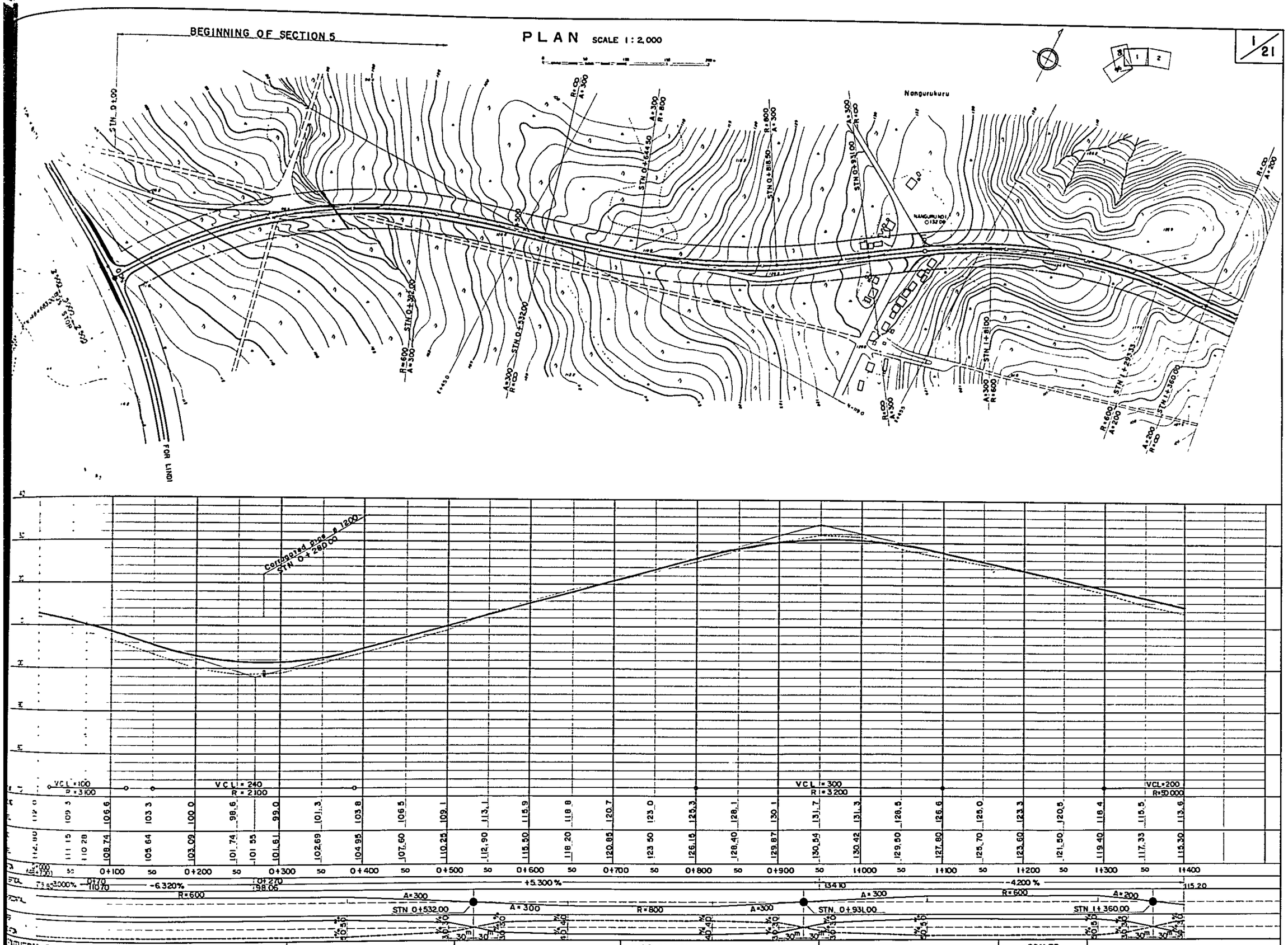

SOUTHERN COASTAL LINK ROAD

ROAD 5 NANGURUKURU —— KILWASOKO

PROFILE LONGITUDINAL SECTION STN Km 0+0 TO STN Km. 1+400

MINISTRY OF WORKS

NOTES

REVISIONS

ROADS DIVISION

DIRECTOR OF ROADS .....

DATE .....

MW. DRG. No.

SCALES

HORIZONTAL 1:2,000

VERTICAL 1:400

DRG. No.

DATE

SHEET 212 OF 269

PLAN SCALE 1:2,000

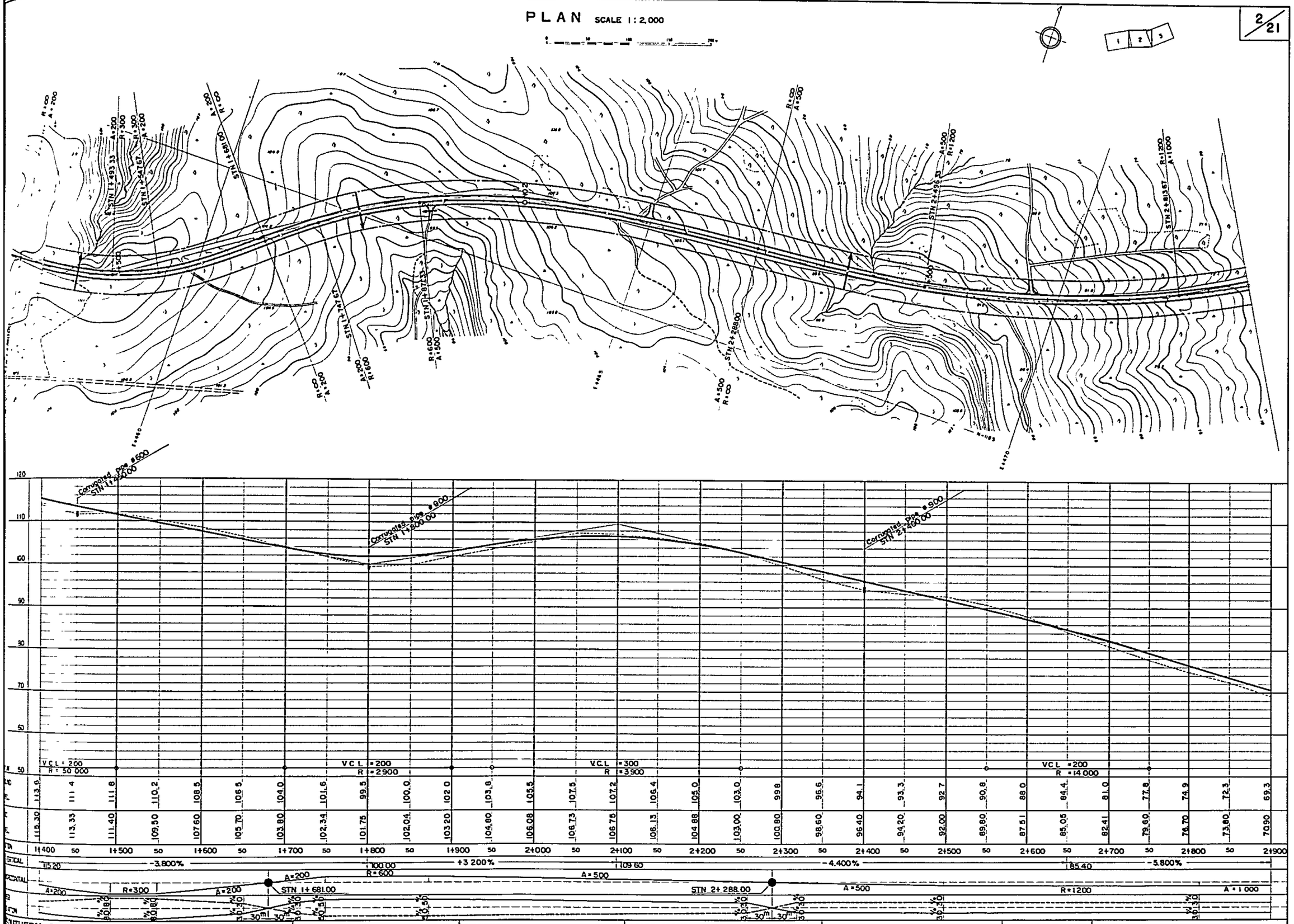

| | | |

PLAN SCALE 1:2,000

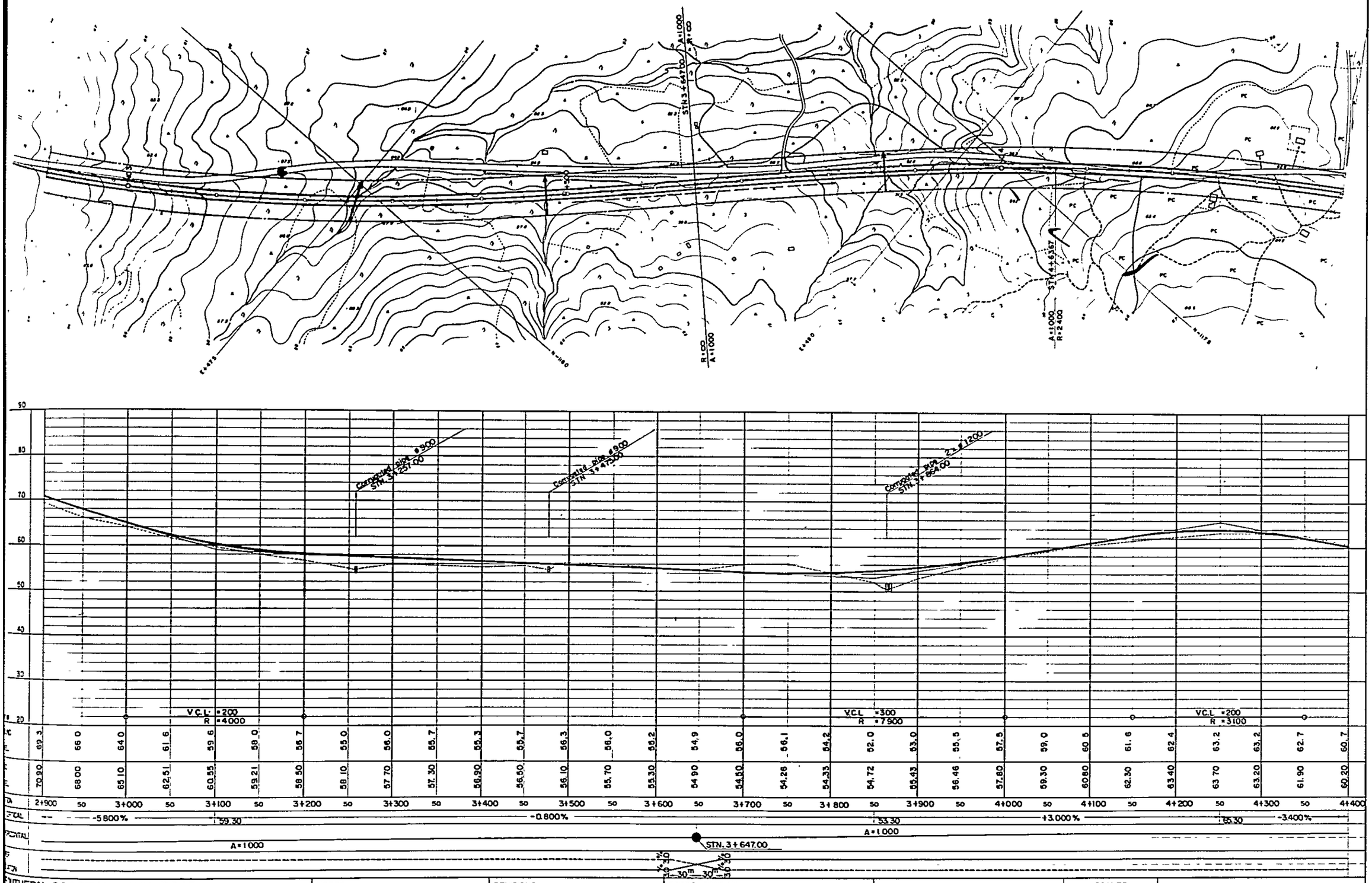

SOUTHERN COASTAL LINK ROAD SECTION 5 NANGURUKURU — KILWAMASOKO DRG. LONGITUDINAL SECTION STN Km 2+900 TO STN Km 4+400 MINISTRY OF WORKS	NOTES	REVISIONS	ROADS DIVISION DIRECTOR OF ROADS DATE MW. DRG. No.	SCALES HORIZONTAL 1:2,000 VERTICAL 1:400	DRG. No. DATE SHEET 214 OF 269

PLAN SCALE 1:2,000

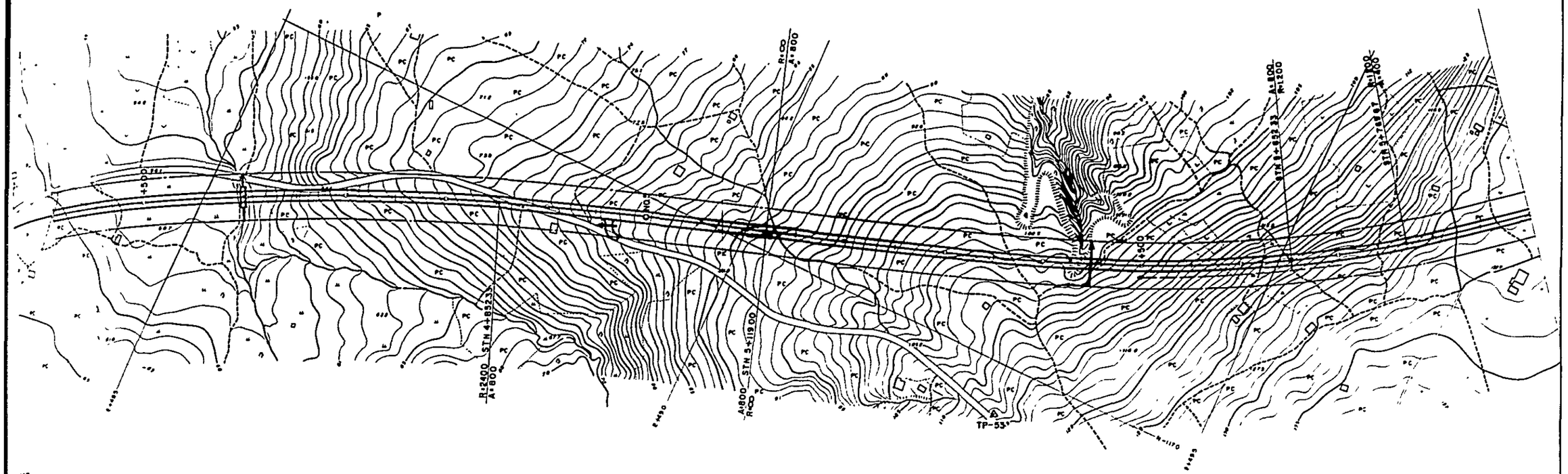

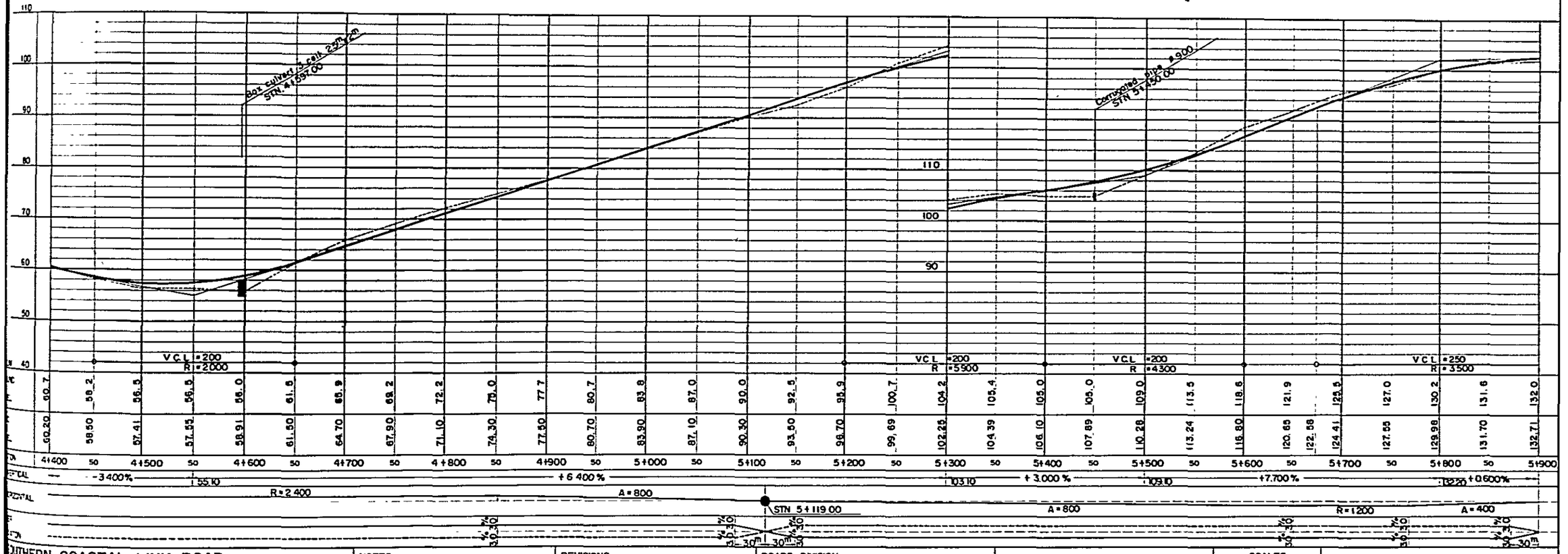

SOUTHERN COASTAL LINK ROAD SECTION 5 NANGURUKURU —— KILWAMASOKO PROFILE LONGITUDINAL SECTION STN Km 4 + 400 TO STN Km 5 + 900 MINISTRY OF WORKS	NOTES	REVISIONS	ROADS DIVISION DIRECTOR OF ROADS DATE MW, DRG. No.	SCALES HORIZONTAL 1 : 2.000 VERTICAL 1 : 400	DRG. No. DATE SHEET 215 OF 269

PLAN SCALE 1:2,000

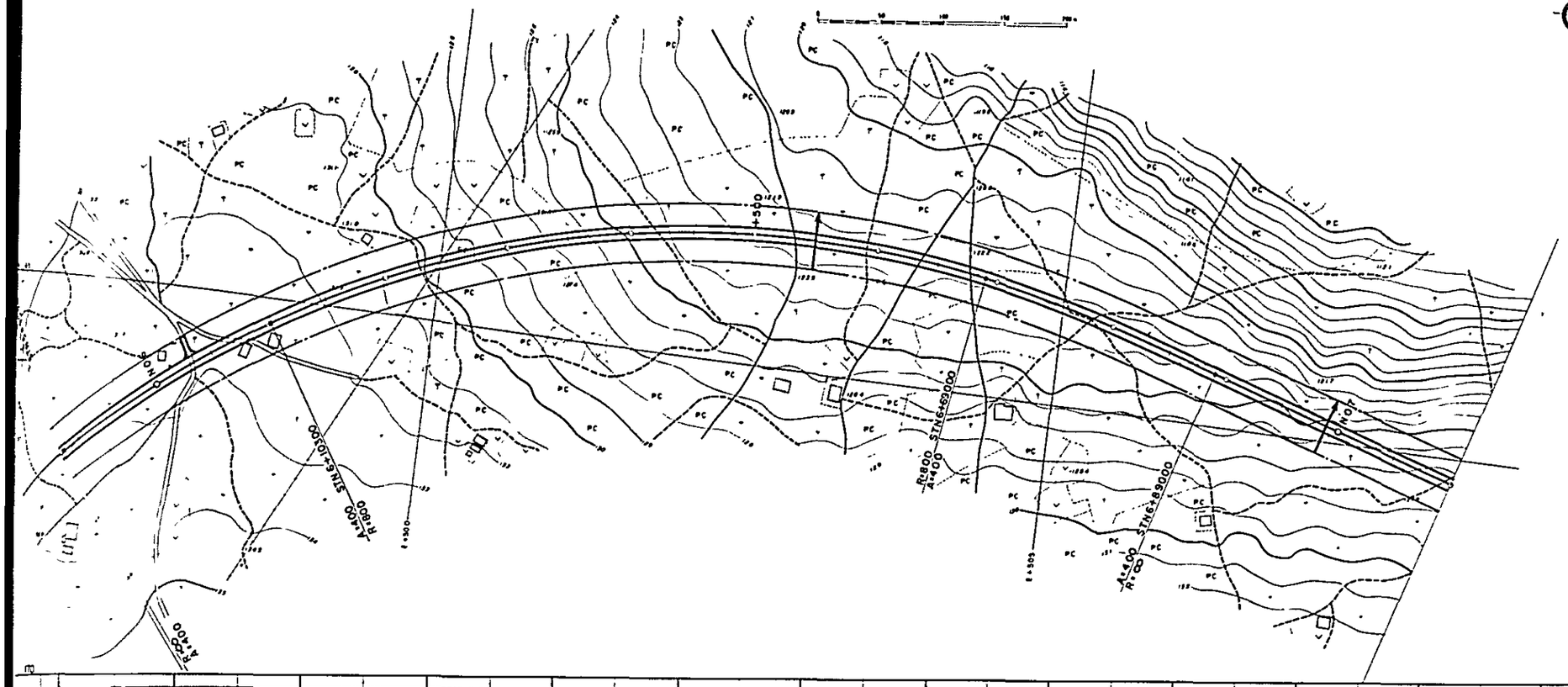

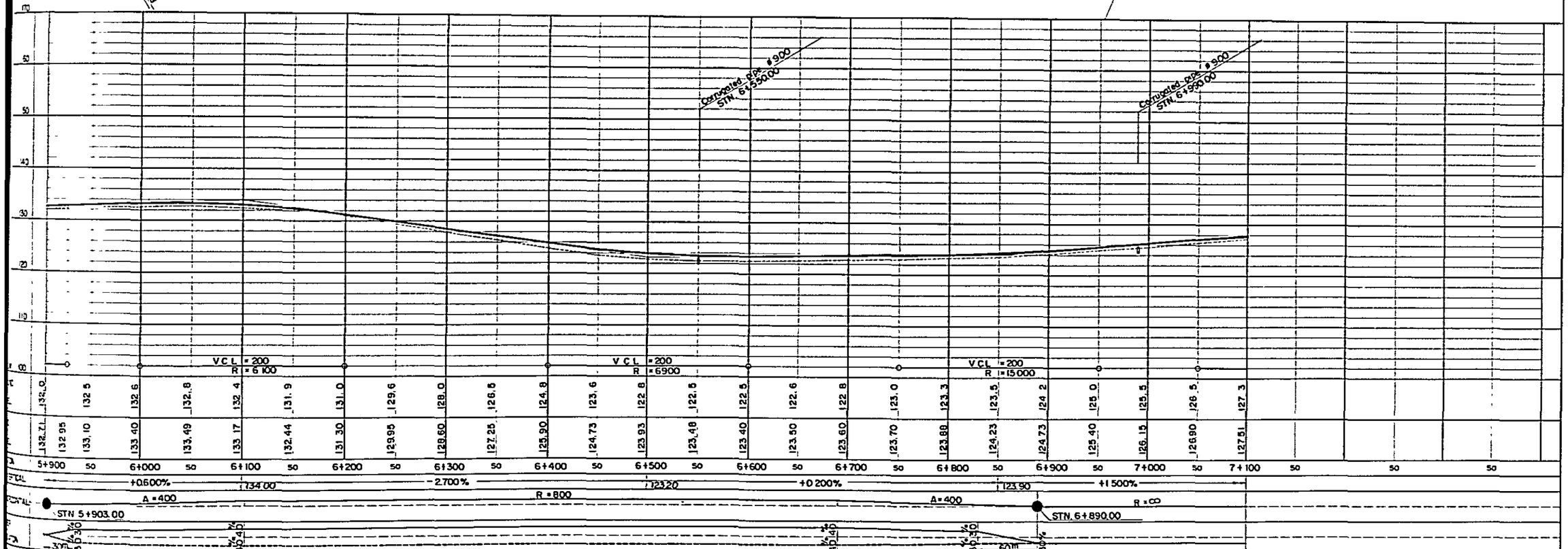

SOUTHERN COASTAL LINK ROAD SECTION 5 - NANGURUKURU — KILWAMASOKO PLAN AND LONGITUDINAL SECTION STN.Km 5+900 TO STN.Km. 7+100 MINISTRY OF WORKS	NOTES	REVISIONS	ROADS DIVISION DIRECTOR OF ROADS ..... DATE ..... MW, DRG. No.	SCALES HORIZONTAL 1:2,000 VERTICAL 1:400	DRG. No. DATE SHEET 216 OF 269

PLAN SCALE 1:2,000

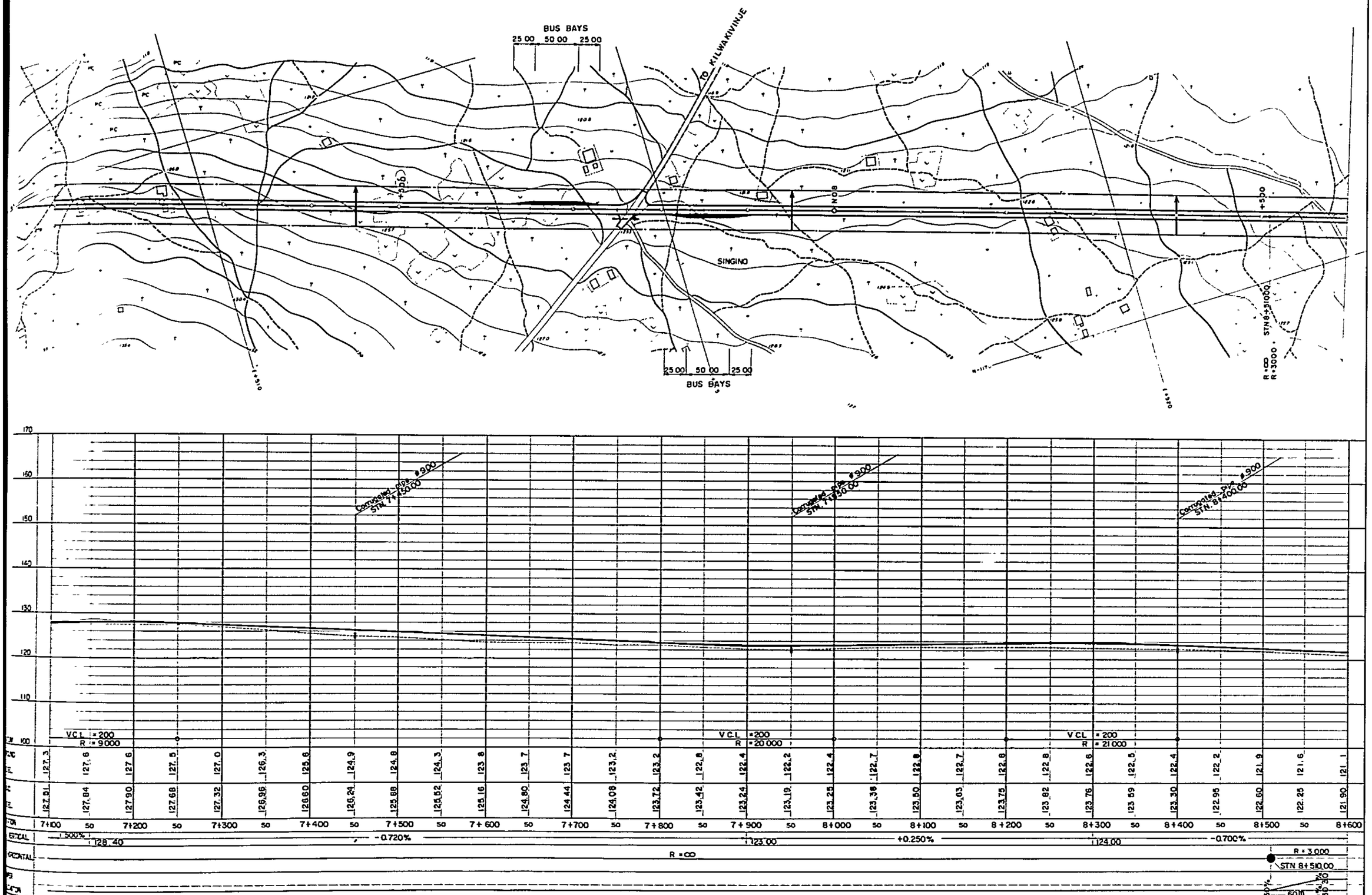

SOUTHERN COASTAL LINK ROAD SECTION 5 - NANGURUKURU —— KILWAMASOKO PLAN AND LONGITUDINAL SECTION STN.Km 7+100 TO STN.Km. 8+600 MINISTRY OF WORKS	NOTES	REVISIONS	ROADS DIVISION DIRECTOR OF ROADS ..... DATE ..... MW. DRG. No.	SCALES HORIZONTAL 1:2.000 VERTICAL 1:400	DRG.No. DATE SHEET 217 OF 269

PLAN SCALE 1:2,000

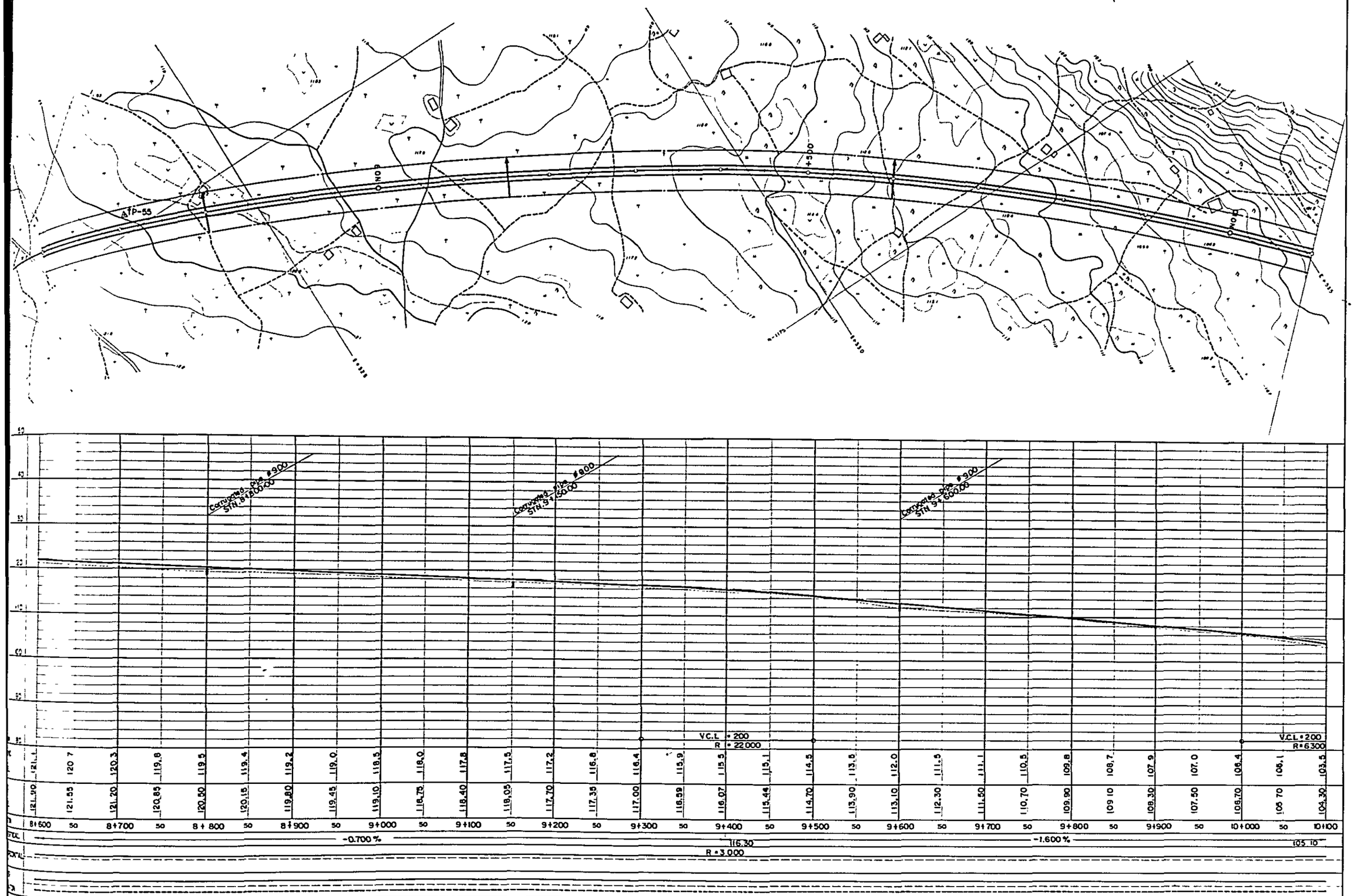

SOUTHERN COASTAL LINK ROAD SECTION 5-NANGURUKURU —— KILWAMASOKO LONGITUDINAL SECTION STN.Km 8+600 TO STN.Km 10+100 MINISTRY OF WORKS	NOTES	REVISIONS	ROADS DIVISION DIRECTOR OF ROADS ..... DATE ..... MW, DRG. No.		SCALES HORIZONTAL 1:2,000 VERTICAL 1:400	DRG. No. DATE SHEET 218 OF 269

PLAN SCALE 1:2,000

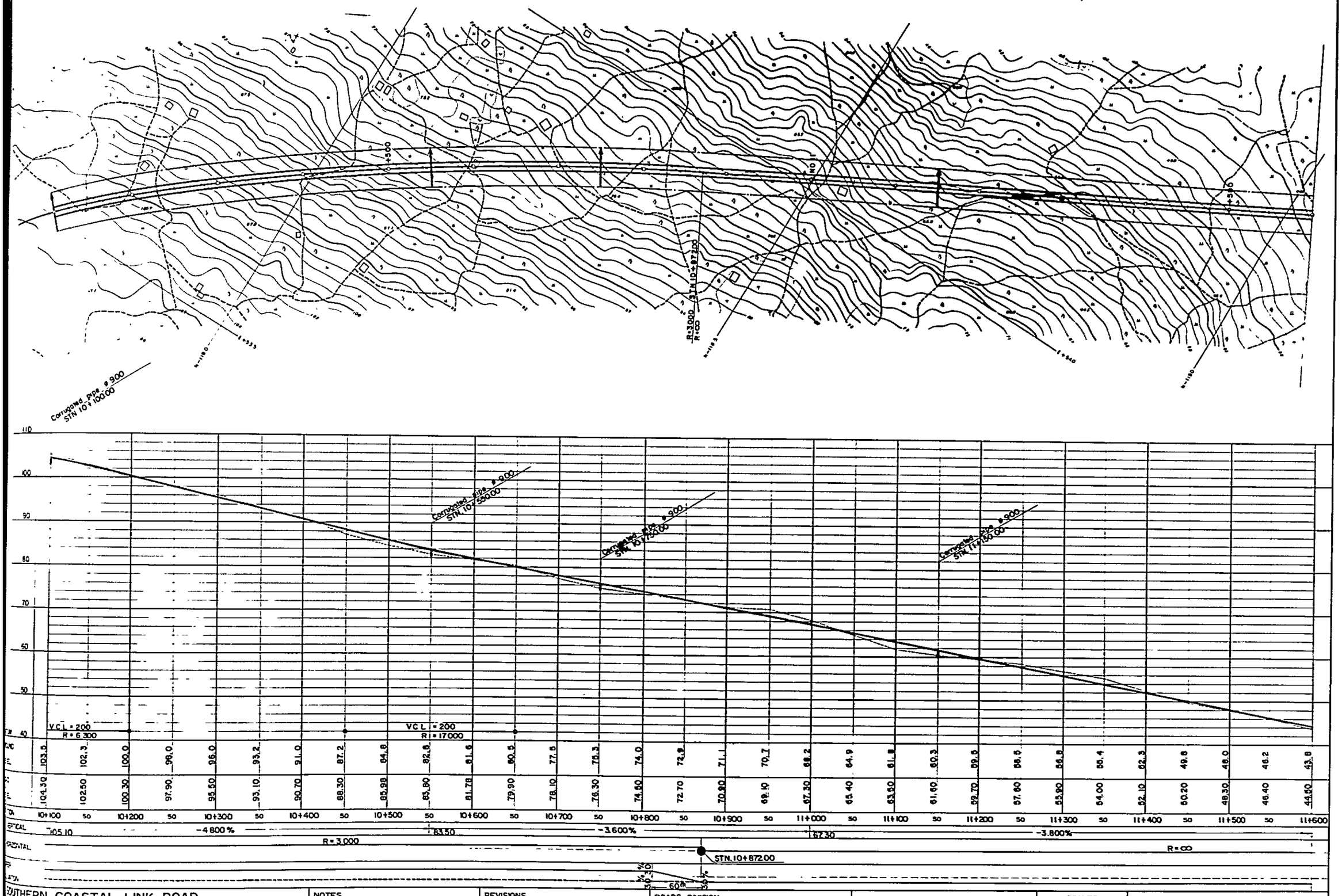

STN	10+100	50	10+200	50	10+300	50	10+400	50	10+500	50	10+600	50	10+700	50	10+800	50	10+900	50	11+000	50	11+100	50	11+200	50	11+300	50	11+400	50	11+500	50	11+600
	103.5		102.3		100.0		98.0		95.0		93.2		91.0		87.2		84.8		82.8		81.6		80.5		77.5		75.3		74.0		72.8
	104.30		102.50		100.30		97.90		95.50		93.10		90.70		88.30		85.98		83.80		81.78		79.90		78.10		76.30		74.50		72.70

STN	71.1		70.7		68.2		64.9		61.8		60.3		59.5		58.5		56.8		55.4		52.3		49.8		48.0		46.2		43.8
	70.90		69.10		67.30		65.40		63.50		61.60		59.70		57.80		55.90		54.00		52.10		50.20		48.30		46.40		44.50

SOUTHERN COASTAL LINK ROAD	NOTES
SECTION 5 NANGURUKURU —— KILWAMASOKO	
DRG LONGITUDINAL SECTION STN Km 10+100 TO STN Km 11+600	
MINISTRY OF WORKS	

REVISIONS	ROADS DIVISION	SCALES	DRG. No.
	DIRECTOR OF ROADS	HORIZONTAL 1:2,000	DATE
	DATE	VERTICAL 1:400	SHEET 219 OF 269
	MW. DRG. No.		

PLAN SCALE 1:2,000

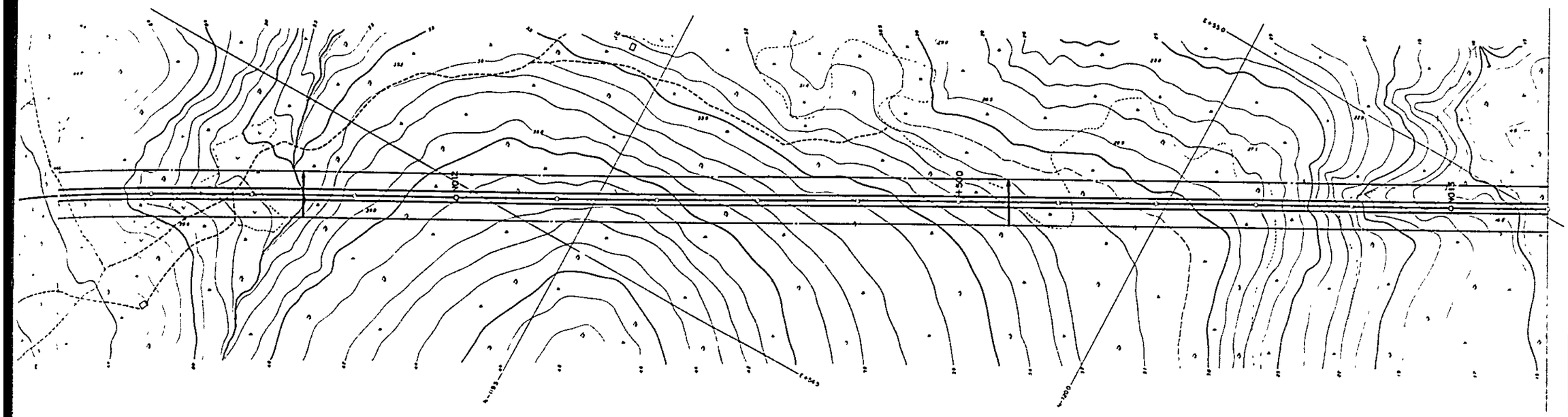

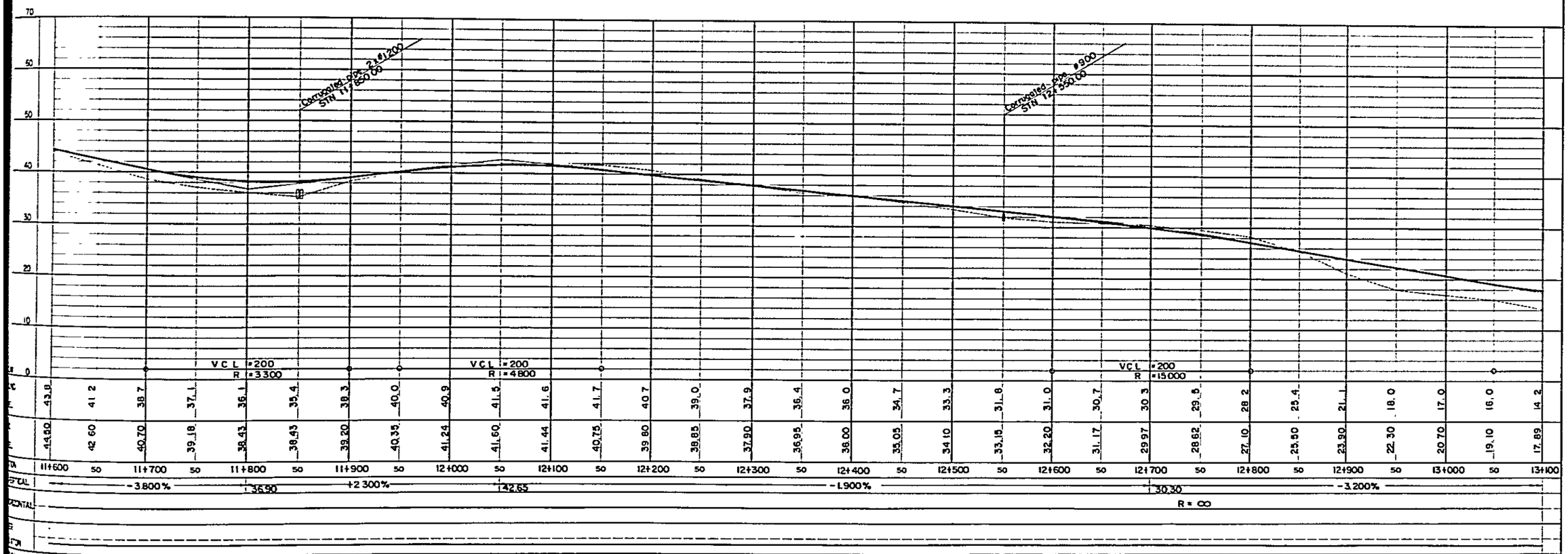

SOUTHERN COASTAL LINK ROAD SECTION 5 - NANGURUKURU —— KILWAMASOKO AND LONGITUDINAL SECTION STN.Km 11+600 TO STN.Km 13+100 MINISTRY OF WORKS	NOTES	REVISIONS	ROADS DIVISION DIRECTOR OF ROADS ..... DATE ..... MW, DRG. No.	SCALES HORIZONTAL 1:2,000 VERTICAL 1:400	DRG.No. DATE SHEET 220 OF 269

PLAN SCALE 1:2,000

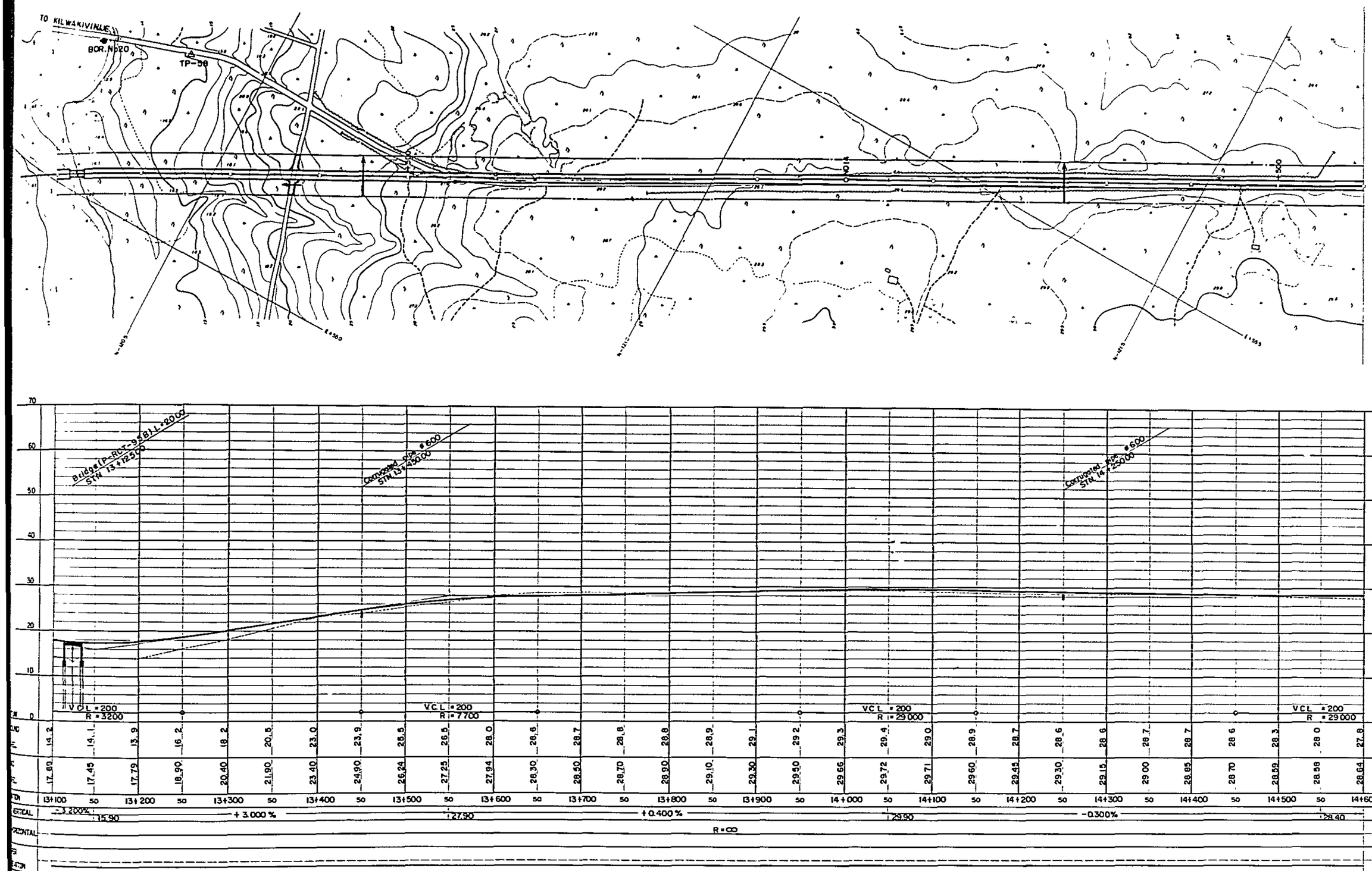

SOUTHERN COASTAL LINK ROAD SECTION 5 - NANGURUKURU —— KILWAMASOKO PLAN AND LONGITUDINAL SECTION STN.Km 13+100 TO STN.Km 14+600 MINISTRY OF WORKS	NOTES	REVISIONS	ROADS DIVISION DIRECTOR OF ROADS ..... DATE ..... MW, DRG. No.	SCALES HORIZONTAL 1:2,000 VERTICAL 1:400	DRG. No. DATE SHEET 221 OF 269

PLAN SCALE 1:2,000

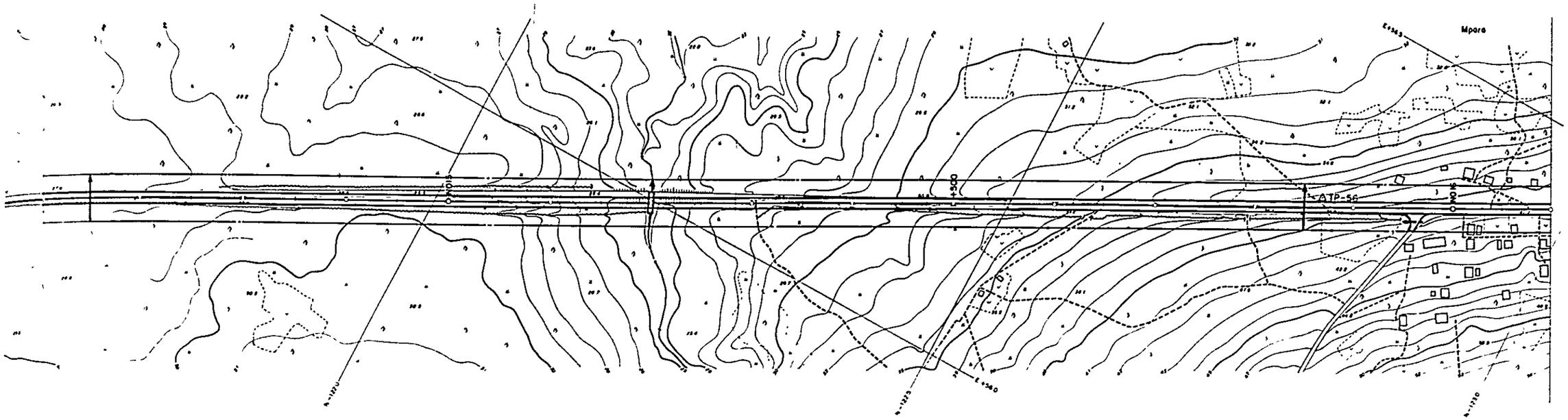

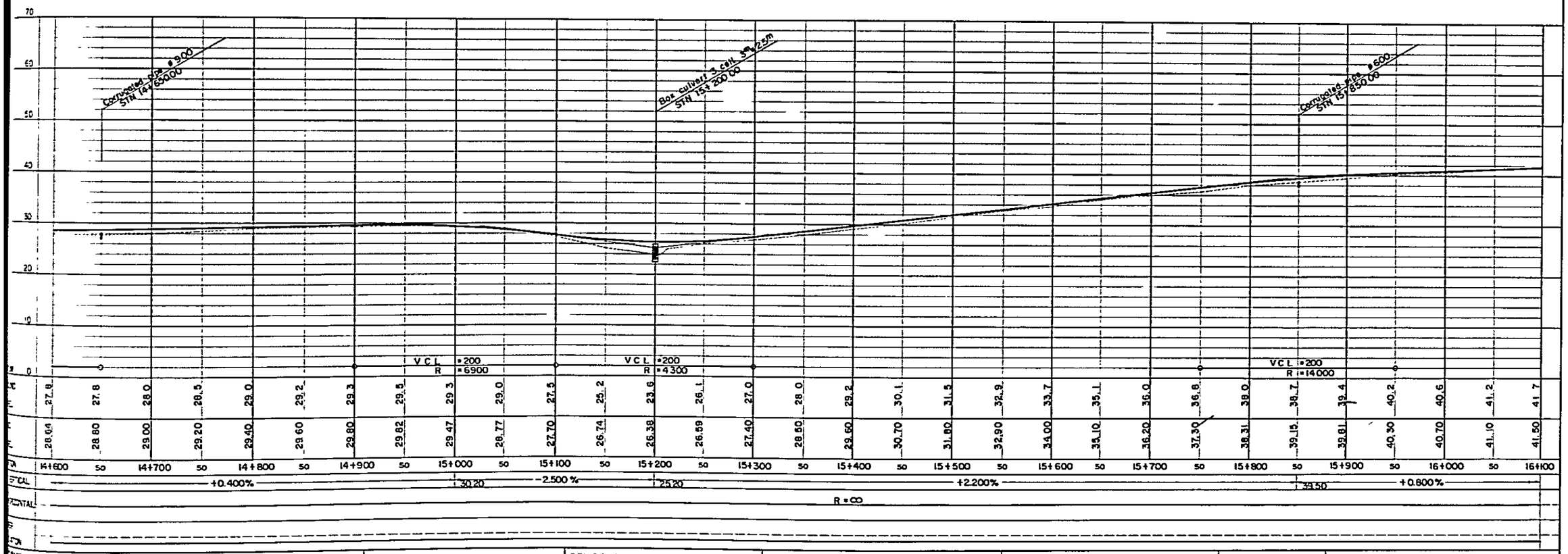

SOUTHERN COASTAL LINK ROAD SECTION 5 - NANGURUKURU —— KILWAMASOKO FOR LONGITUDINAL SECTION STN Km 14+600 TO STN Km. 16+100 MINISTRY OF WORKS	NOTES	REVISIONS	ROADS DIVISION DIRECTOR OF ROADS ..... DATE ..... MW, DRG. No.	SCALES HORIZONTAL 1 : 2,000 VERTICAL 1 : 400	DRG. No. DATE SHEET 222 OF 269

PLAN SCALE 1:2,000

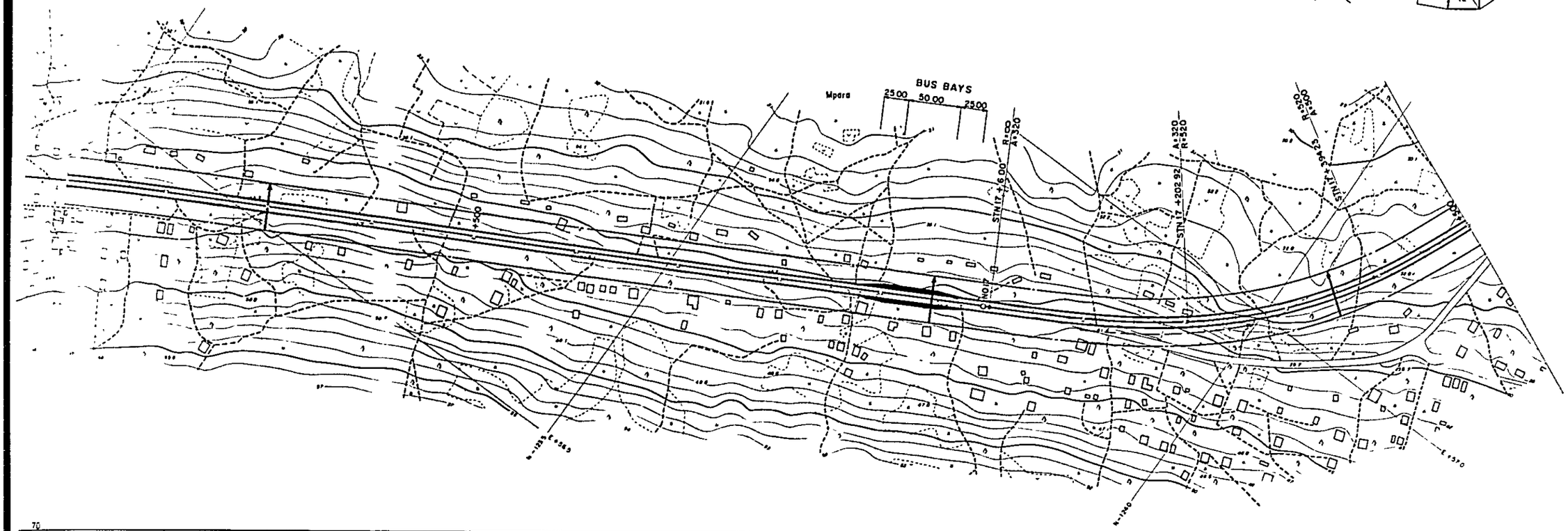

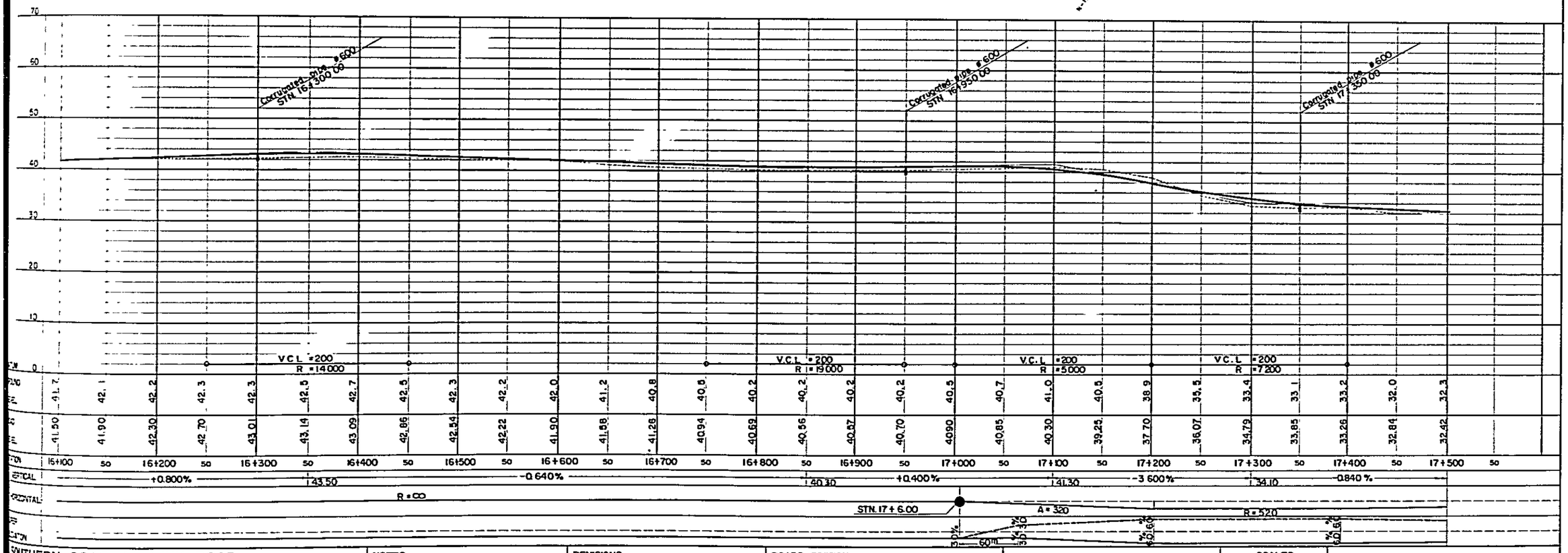

SOUTHERN COASTAL LINK ROAD SECTION 5 NANGURUKURU —— KILWAMASOKO PLAN AND LONGITUDINAL SECTION STN Km 16+100 TO STN Km 17+500 MINISTRY OF WORKS	NOTES	REVISIONS	ROADS DIVISION DIRECTOR OF ROADS ..... DATE ..... MW. DRG. No.	SCALES HORIZONTAL 1:2,000 VERTICAL 1:400	DRG. No. DATE SHEET 223 OF 269

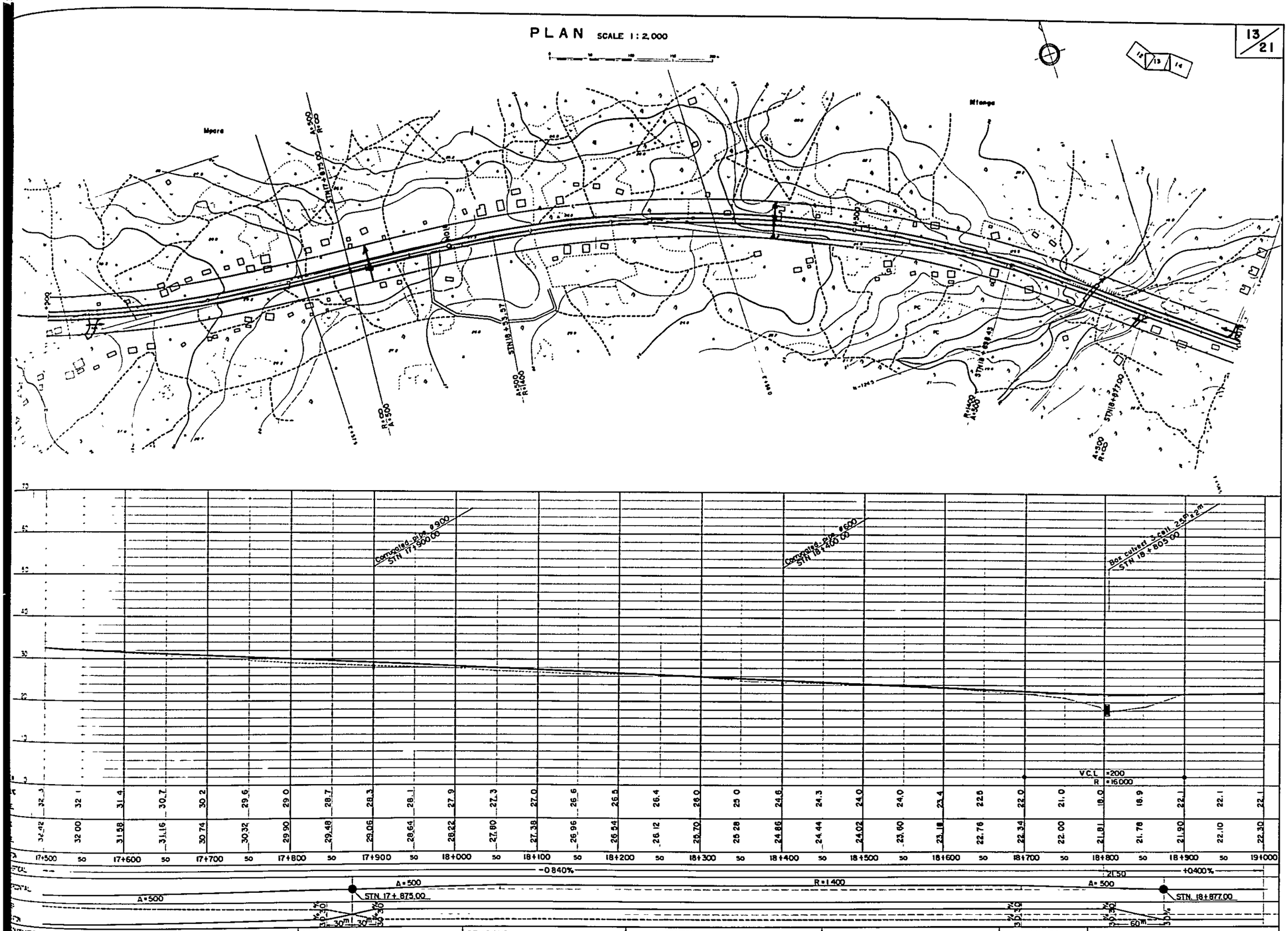

SOUTHERN COASTAL LINK ROAD SECTION 5 NANGURUKURU —— KILWAMASOKO PROFILE LONGITUDINAL SECTION STN Km 17+500 TO STN Km 19+000 MINISTRY OF WORKS	NOTES	REVISIONS	ROADS DIVISION DIRECTOR OF ROADS DATE MW. DRG. No.	SCALES HORIZONTAL 1:2,000 VERTICAL 1:400	DRG. No. DATE SHEET 224 OF 269

PLAN SCALE 1:2,000

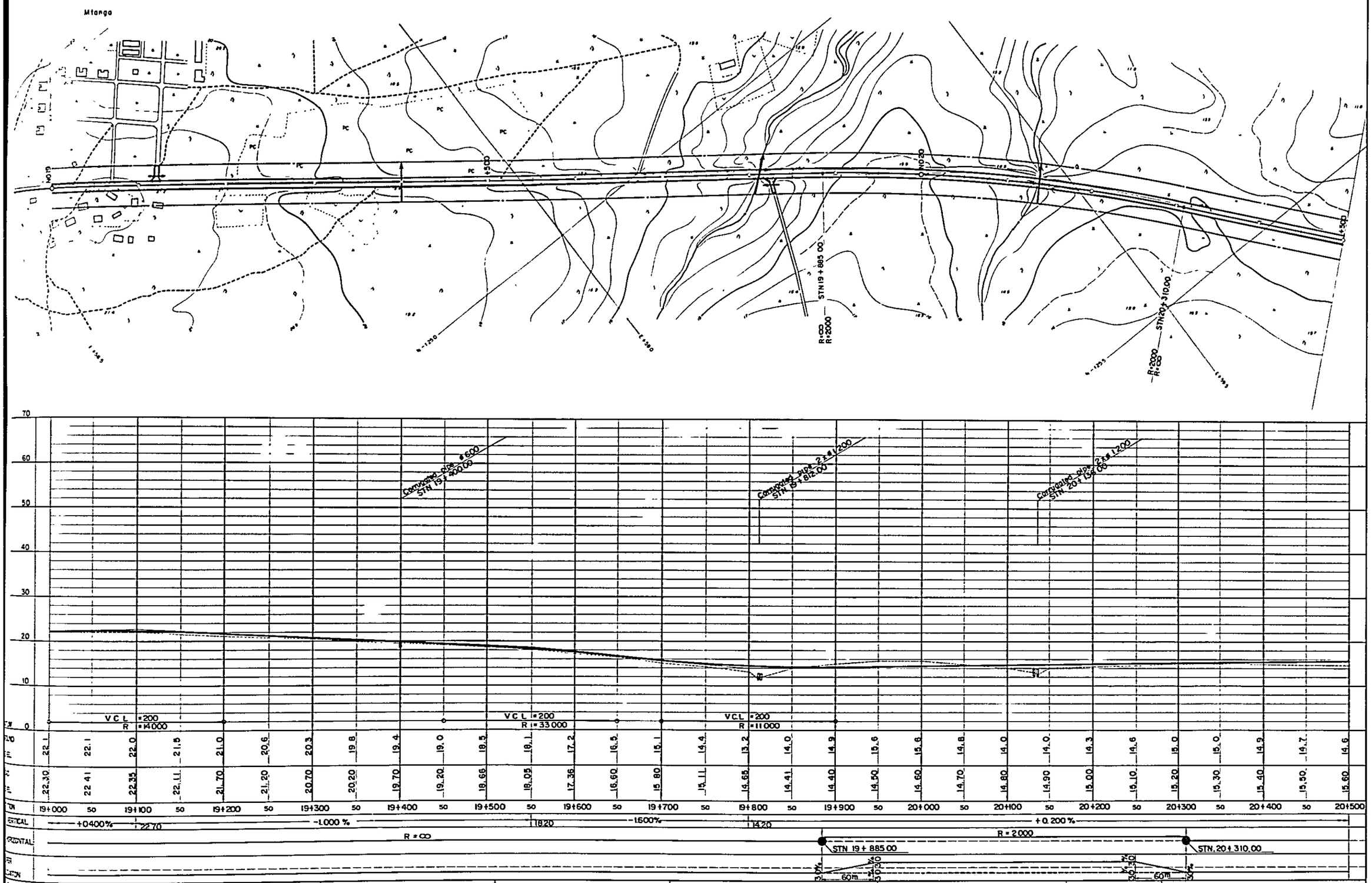

	22.1	22.1	22.0	21.5	21.0	20.6	20.3	19.8	19.4	19.0	18.5	18.1	17.2	16.5	15.1	14.4	13.2	14.0	14.9	15.6	15.6	14.8	14.0	14.0	14.3	14.6	15.0	15.0	14.9	14.7	14.6
	22.30	22.41	22.35	22.11	21.70	21.20	20.70	20.20	19.70	19.20	18.66	18.05	17.36	16.60	15.80	15.11	14.65	14.41	14.40	14.50	14.60	14.70	14.80	14.90	15.00	15.10	15.20	15.30	15.40	15.50	15.60
	19+000	50	19+100	50	19+200	50	19+300	50	19+400	50	19+500	50	19+600	50	19+700	50	19+800	50	19+900	50	20+000	50	20+100	50	20+200	50	20+300	50	20+400	50	20+500

SOUTHERN COASTAL LINK ROAD SECTION 5 NANGURUKURU —— KILWAMASOKO AND LONGITUDINAL SECTION STN Km 19+000 TO STN Km 20+500 MINISTRY OF WORKS	NOTES REVISIONS ROADS DIVISION DIRECTOR OF ROADS ..... DATE ..... MW, DRG. No. SCALES HORIZONTAL 1:2,000 VERTICAL 1:400 DRG. No. DATE SHEET 225 OF 269

PLAN SCALE 1:2,000

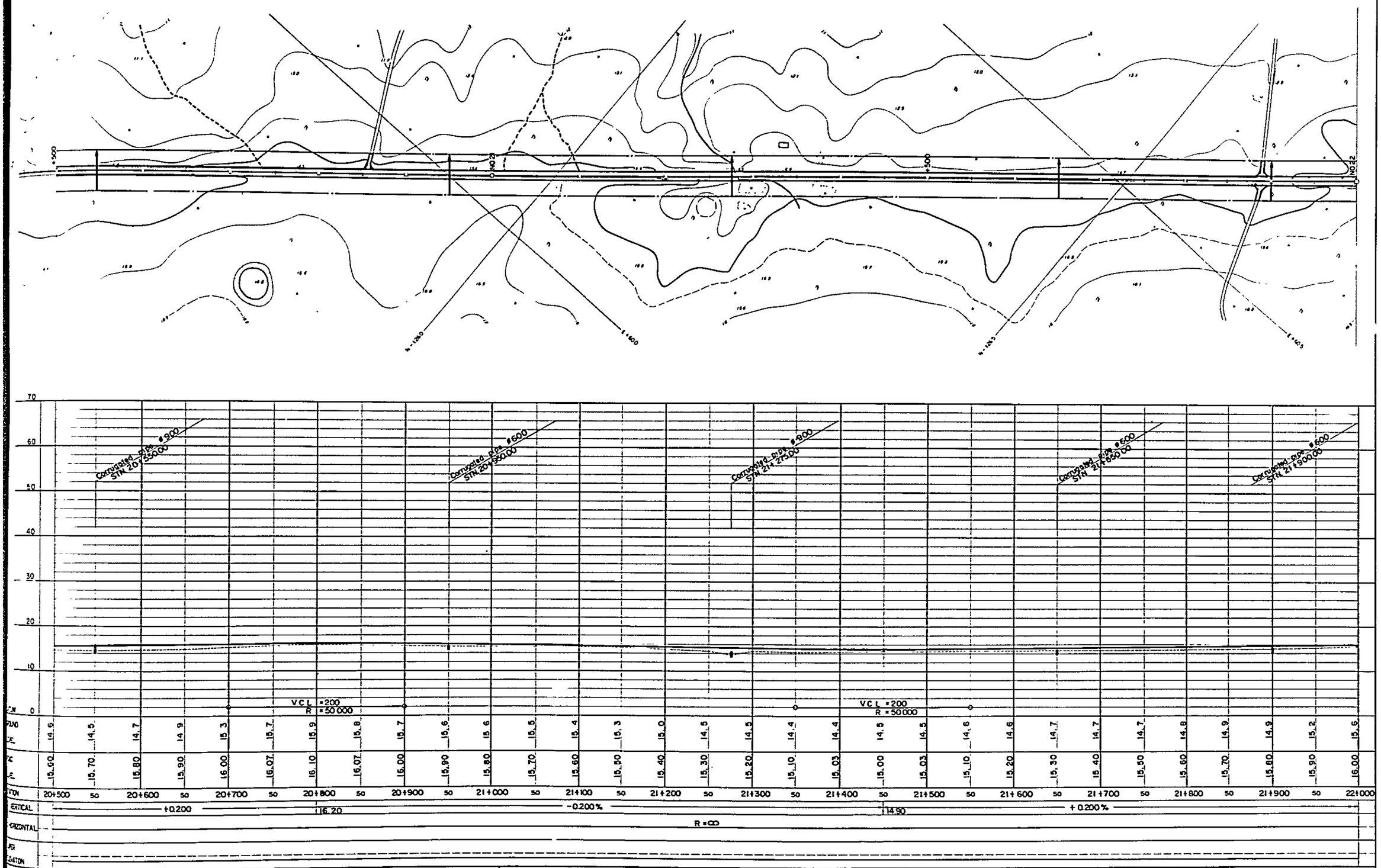

SOUTHERN COASTAL LINK ROAD SECTION 5 MANGURUKURU — KILWAMASOKO PLAN AND LONGITUDINAL SECTION STN.Km 20+500 TO STN.Km 22+000 MINISTRY OF WORKS	NOTES	REVISIONS	ROADS DIVISION DIRECTOR OF ROADS ..... DATE ..... MW, DRG. No.		SCALES HORIZONTAL 1:2,000 VERTICAL 1:400	DRG.No. DATE SHEET 226 OF 269

PLAN SCALE 1:2,000

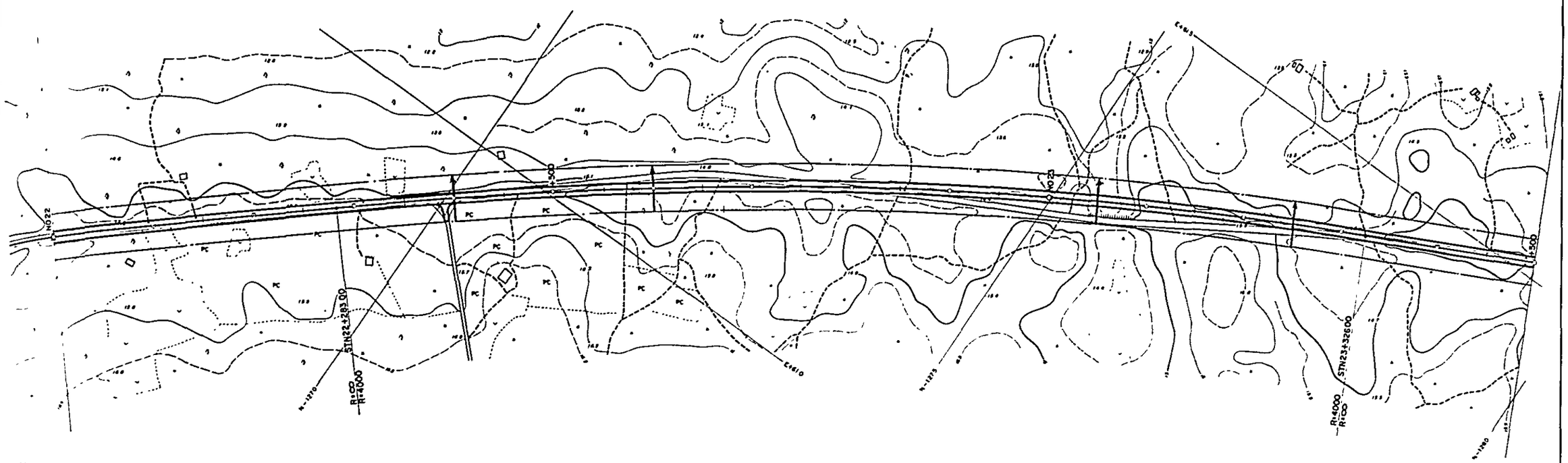

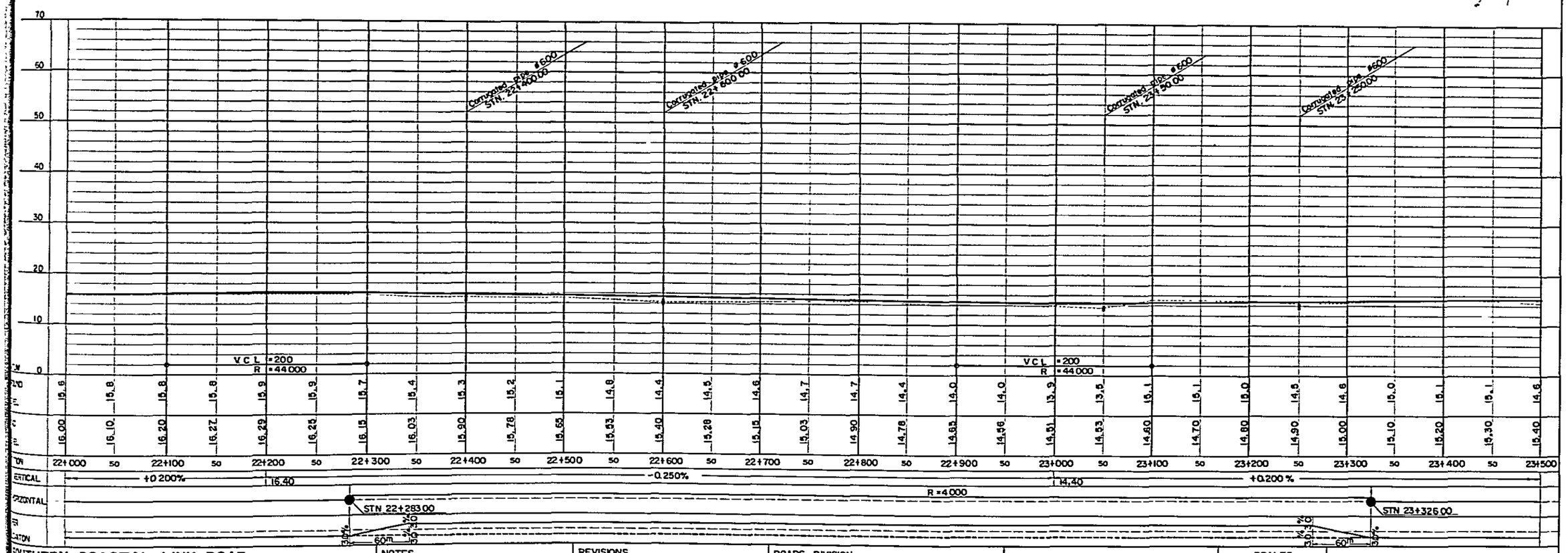

SOUTHERN COASTAL LINK ROAD SECTION 5 NANGURUKURU — KILWAMASOKO PLAN AND LONGITUDINAL SECTION STN.Km 22+000 TO STN.Km 23+500 MINISTRY OF WORKS	NOTES	REVISIONS	ROADS DIVISION DIRECTOR OF ROADS ..... DATE ..... MW, DRG. No.	SCALES HORIZONTAL 1:2,000 VERTICAL 1:400	DRG. No. DATE SHEET 227 OF 269

PLAN SCALE 1:2,000

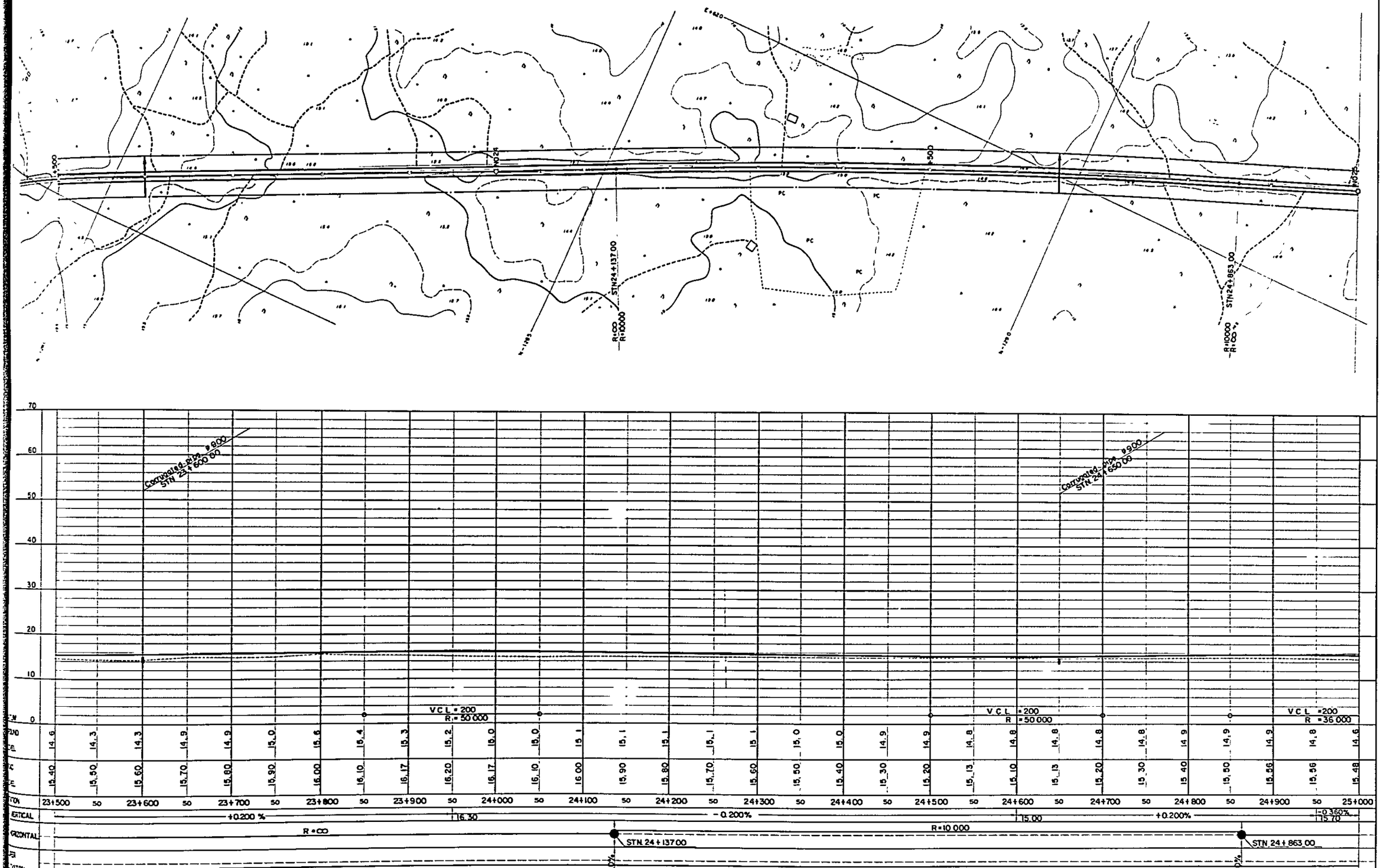

SOUTHERN COASTAL LINK ROAD SECTION 5- NANGURUKURU —— KILWAMASOKO PLAN AND LONGITUDINAL SECTION STN.Km 23+500 TO STN.Km. 25+000 MINISTRY OF WORKS	NOTES	REVISIONS	ROADS DIVISION DIRECTOR OF ROADS ..... DATE ..... MW. DRG. No.		SCALES HORIZONTAL 1:2.000 VERTICAL 1:400	DRG.No. DATE SHEET 228 OF 269

PLAN SCALE 1:2,000

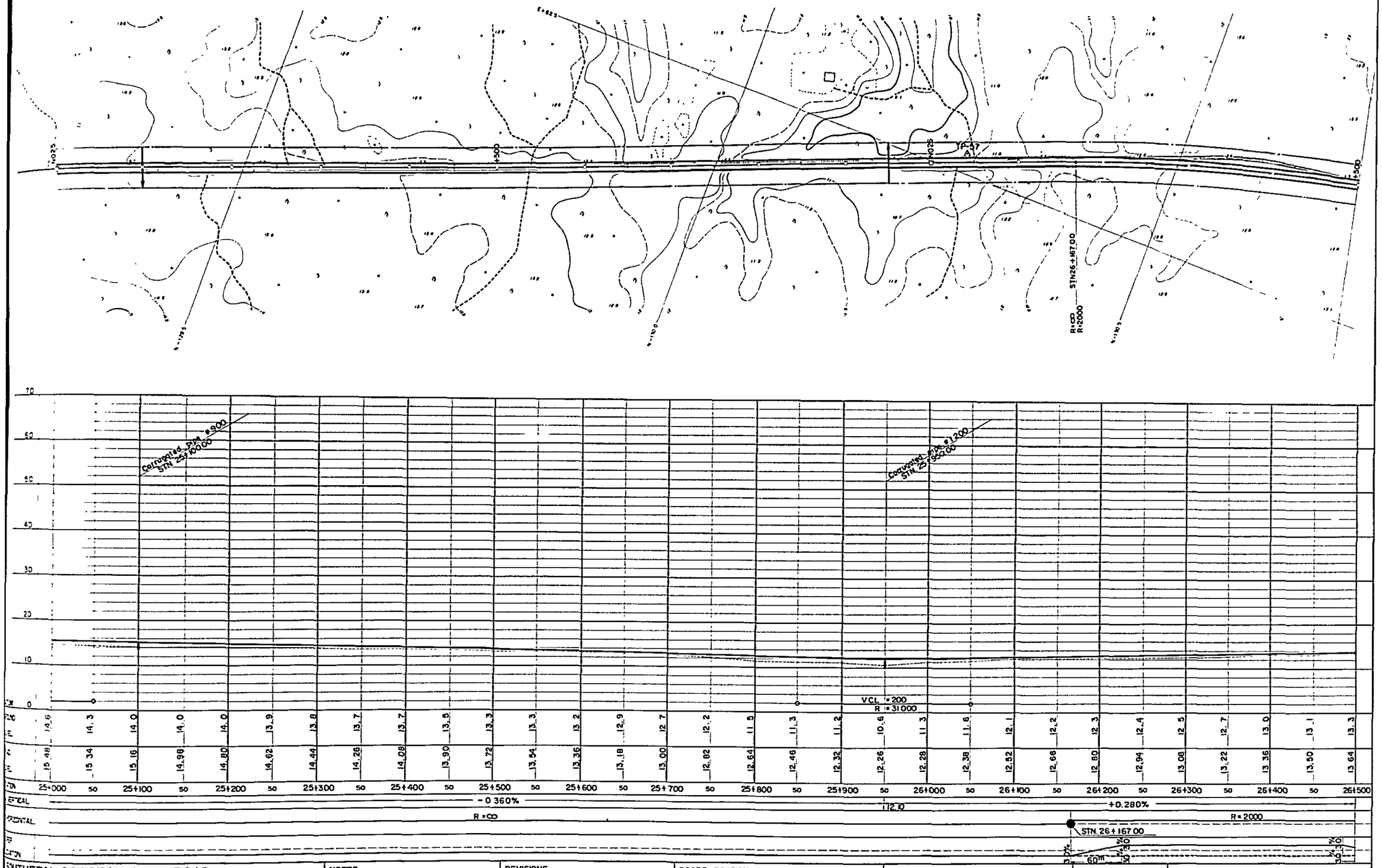

SOUTHERN COASTAL LINK ROAD SECTION 5 NANGURUKURU —— KILWAMASOKO PLAN AND LONGITUDINAL SECTION STN Km 25+000 TO STN Km. 26+500 MINISTRY OF WORKS	NOTES	REVISIONS	ROADS DIVISION DIRECTOR OF ROADS ..... DATE ..... MW, DRG. No.
SCALES HORIZONTAL 1:2,000 VERTICAL 1:400	DRG. No. DATE SHEET 229 OF 269		

PLAN SCALE 1:2,000

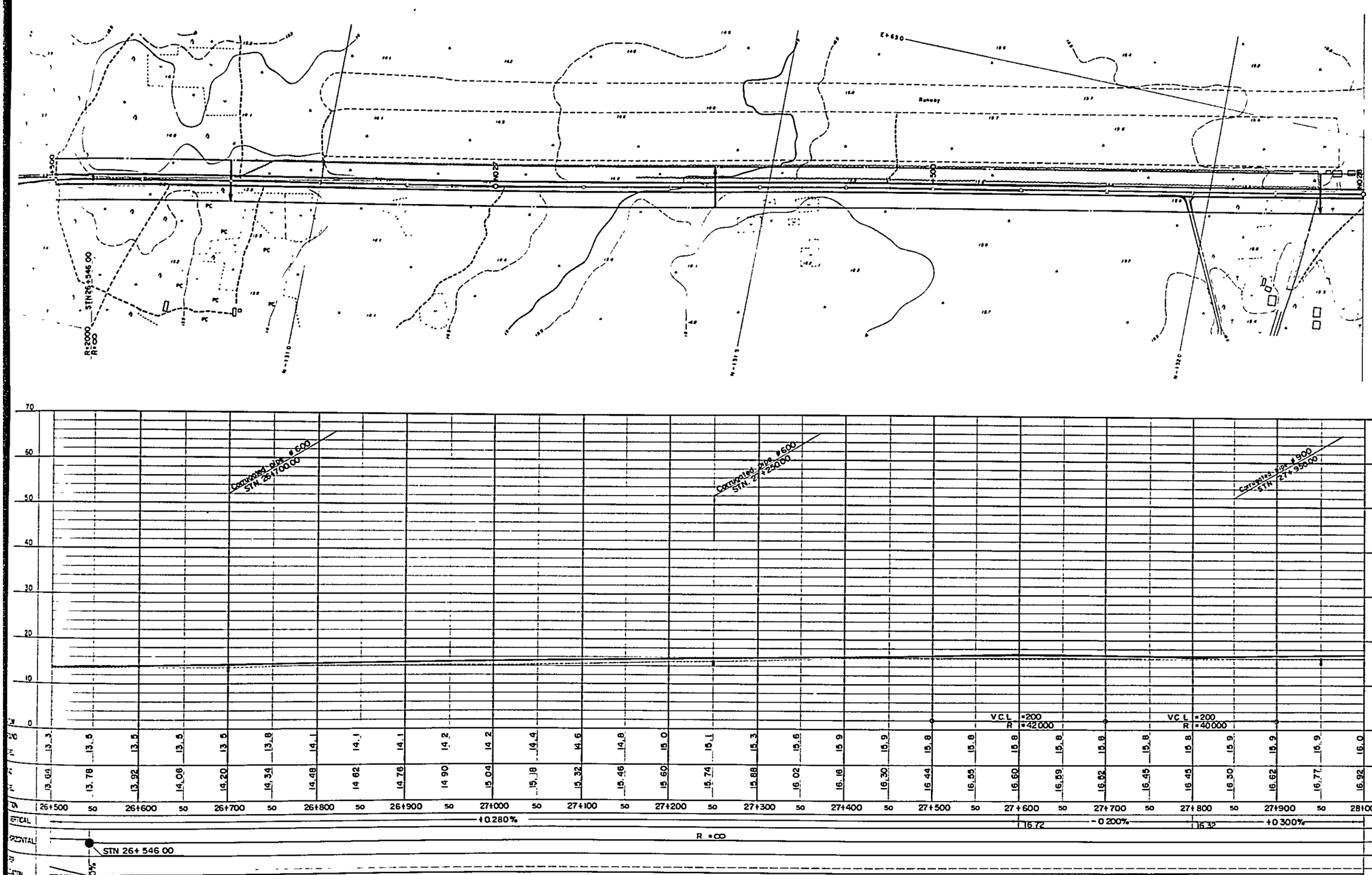

26+500	50	26+600	50	26+700	50	26+800	50	26+900	50	27+000	50	27+100	50	27+200	50	27+300	50	27+400	50	27+500	50	27+600	50	27+700	50	27+800	50	27+900	50	28+000
13.3		13.5		13.5		13.5		13.5		13.8		14.1		14.1		14.1		14.2		14.2		14.4		14.6		14.8		15.0		15.1	
13.04		13.78		13.92		14.06		14.20		14.34		14.48		14.62		14.76		14.90		15.04		15.18		15.32		15.46		15.60		15.74	
15.3		15.6		15.9		15.9		15.8		15.8		15.8		15.8		15.8		15.8		15.8		15.8		15.9		15.9		15.9		16.0	
15.88		16.02		16.16		16.30		16.44		16.55		16.60		16.59		16.52		16.45		16.45		16.50		16.62		16.77		16.92		

VERTICAL: +0.280% | 16.72 | -0.200% | 16.32 | +0.300%

HORIZONTAL: R =∞

STN 26+ 546 00

SOUTHERN COASTAL LINK ROAD
SECTION 5 NANGURUKURU —— KILWAMASOKO
PLAN AND LONGITUDINAL SECTION STN Km 26+500 TO STN Km. 28+000
MINISTRY OF WORKS

NOTES

REVISIONS

ROADS DIVISION
DIRECTOR OF ROADS .....
DATE .....
MW. DRG. No.

SCALES
HORIZONTAL 1 : 2,000
VERTICAL 1 : 400

DRG.No.
DATE
SHEET 230 OF 269

PLAN SCALE 1:2,000

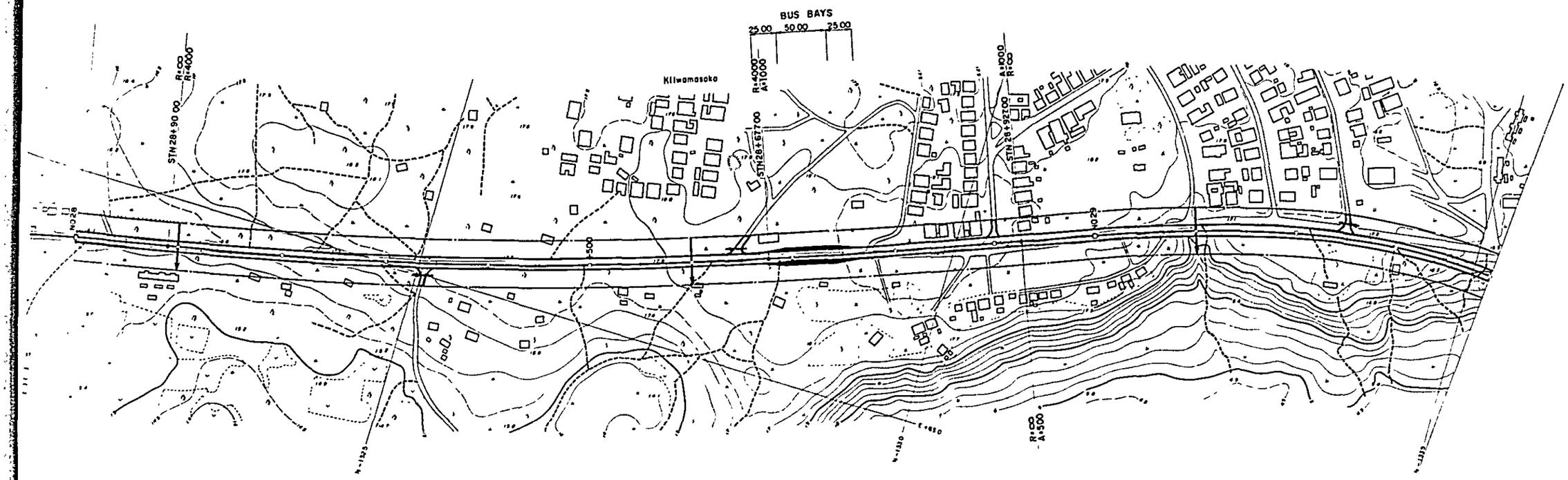

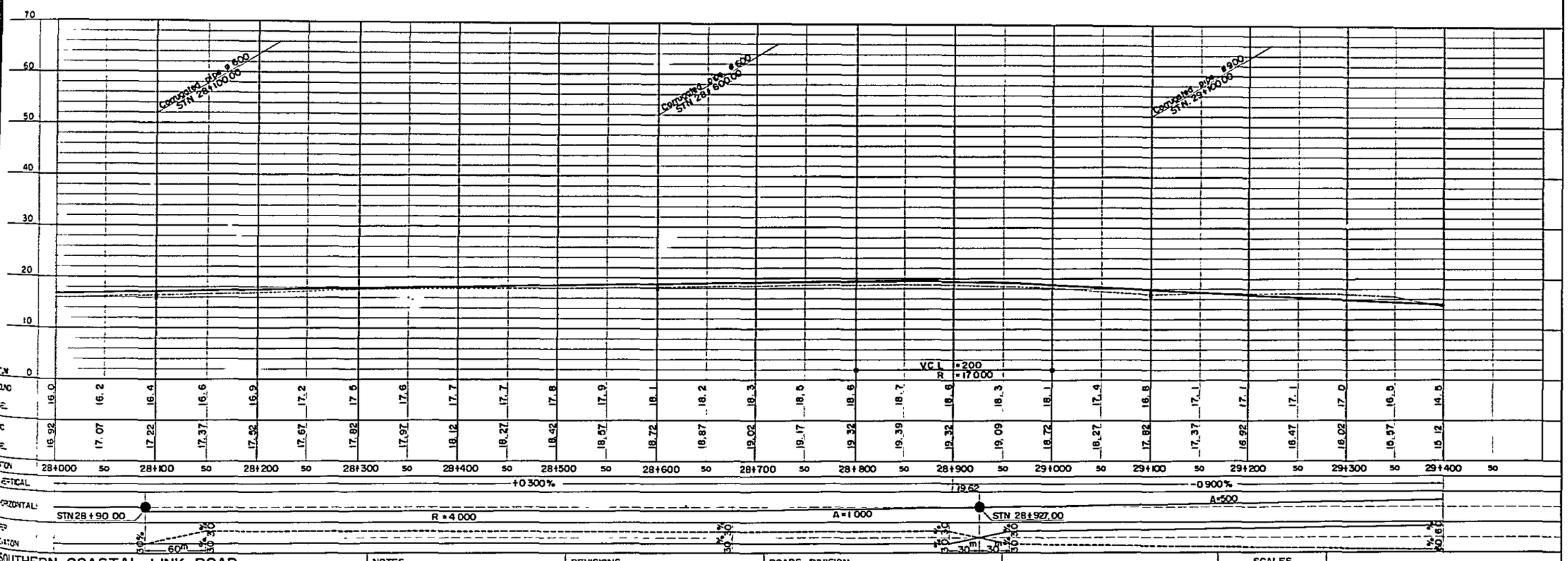

STATION	28+000	50	28+100	50	28+200	50	28+300	50	28+400	50	28+500	50	28+600	50	28+700	50	28+800	50	28+900	50	29+000	50	29+100	50	29+200	50	29+300	50	29+400	50
GROUND	16.0		16.2		16.4		16.6		16.9		17.2		17.5		17.6		17.7		17.7		17.8		17.9		18.1		18.2		18.3	
	18.5		18.6		18.7		18.8		18.3		18.1		17.4		16.8		17.1		17.1		17.1		17.0		16.5		14.5			
FORMATION	16.92		17.07		17.22		17.37		17.52		17.67		17.82		17.97		18.12		18.27		18.42		18.57		18.72		18.87		19.02	
	19.17		19.32		19.39		19.32		19.09		18.72		18.27		17.82		17.37		16.92		16.47		16.02		15.57		15.12			

SOUTHERN COASTAL LINK ROAD	NOTES
SECTION 5 NANGURUKURU —— KILWAMASOKO	REVISIONS
PLAN AND LONGITUDINAL SECTION STN Km 28+000 TO STN Km 29+400	ROADS DIVISION
MINISTRY OF WORKS	DIRECTOR OF ROADS
	DATE
	MW, DRG. No.

SCALES	
HORIZONTAL 1:2.000	DRG.No.
VERTICAL 1:400	DATE
	SHEET 231 OF 269

PLAN SCALE 1:2,000

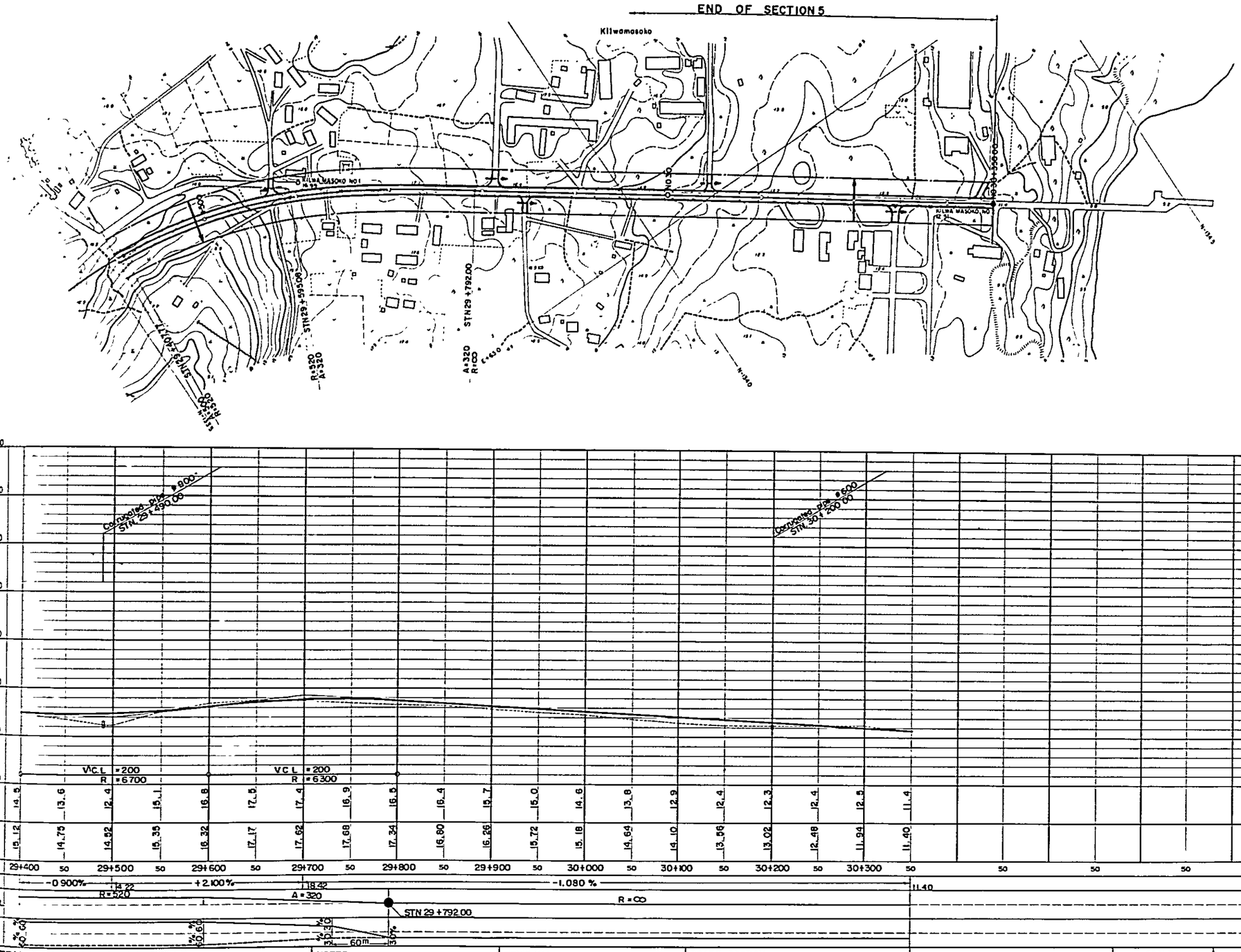

SOUTHERN COASTAL LINK ROAD SECTION 5 NANGURUKURU — KILWAMASOKO AND LONGITUDINAL SECTION STN Km 29+400 TO STN Km 30+350 MINISTRY OF WORKS	NOTES	REVISIONS	ROADS DIVISION DIRECTOR OF ROADS ..... DATE ..... MW. DRG. No.	SCALES HORIZONTAL 1:2,000 VERTICAL 1:400	DRG. No. DATE SHEET 232 OF 269

LOCATION MAP OF BRIDGES

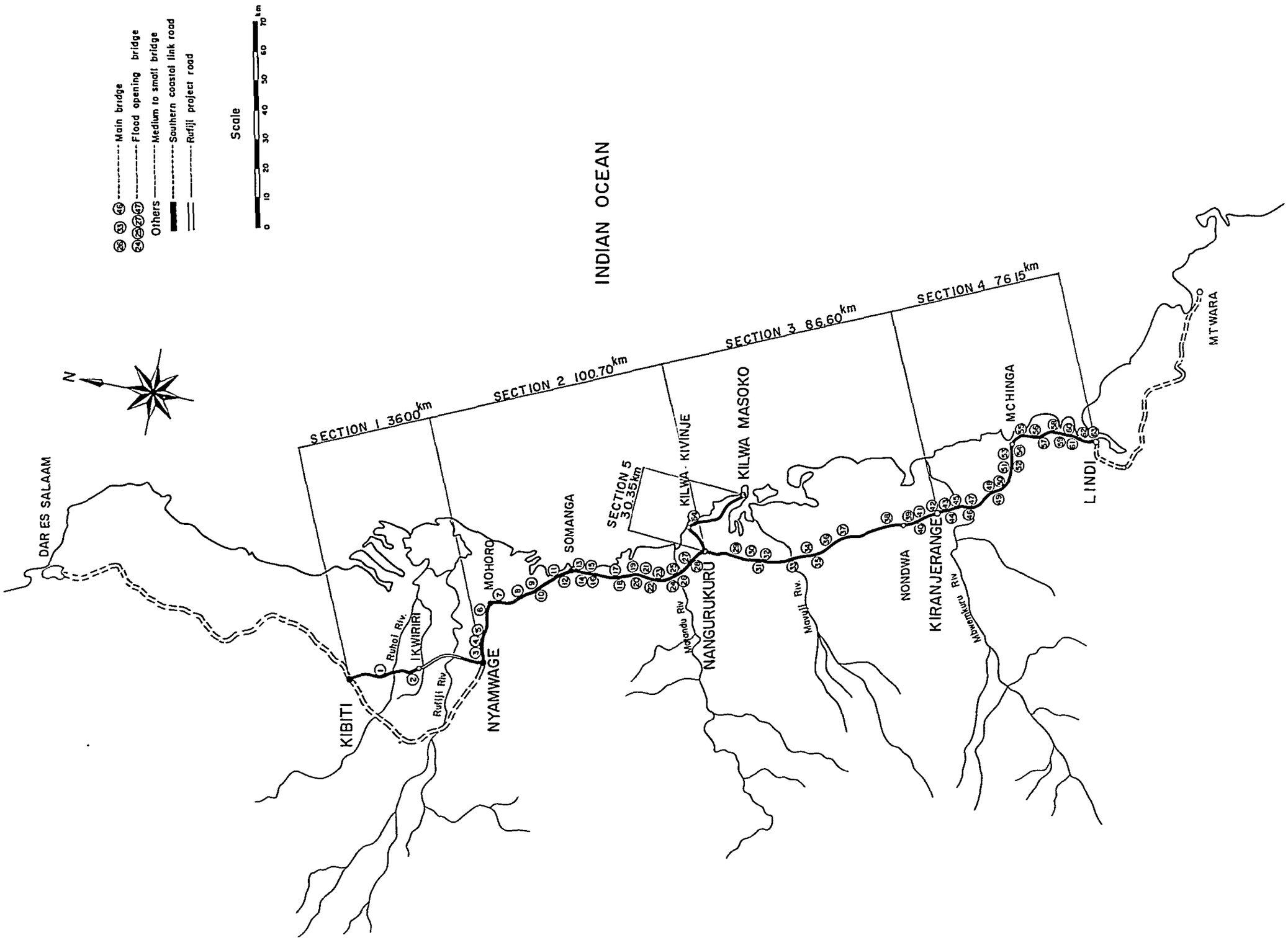

SOUTHERN COASTAL LINK ROAD — LOCATION MAP OF BRIDGES MINISTRY OF WORKS	NOTES	REVISIONS	ROADS DIVISION DIRECTOR OF ROADS ..... DATE ..... MW, DRG. No.		SCALES HORIZONTAL VERTICAL	DRG. No. DATE SHEET 233 OF 269

BRIDGE DESIGN LIST

SECTION	BRIDGE NO	STATION	DESIGN CONDITION: TOTAL LENGTH (m)	SPAN LENGTH (m) x Each	WIDTH (m)	ALIGNMENT	SKEW ANGLE (Deg)	SUPER-STRUCTURE	BRIDGE TYPE: SUB-STRUCTURE: ABUTMENT A1 BODY	ABUTMENT A1 FOUNDATION	PIER BODY	PIER FOUNDATION	ABUTMENT A2 BODY	ABUTMENT A2 FOUNDATION	REMARKS
1	1	14+663 0~677 0	14 0	13 5x1	7 5	R=1500 A=700	90	C-RCT-13.5B	WA-6 0	15 0x14			WA-6 0	15 0x14	
	2	24+655 0~675 0	20 0	9 5x2	"	R 6000	L 70	-9.5B	" 6 0	15 0x12	B P - 4	18 5x4	6 5	14 5x14	
	TOTAL		34 0												
2	3	50+682 8~717 3	34 5	11 0x3	7 5+1 0	R 800	90	P RCT-11A	WA-4 5	15 0x10	B P - 4	18 0x4	WA-4 5	15 0x10	
	4	57+536 0~564 0	28 0	13 5x2	7 5	R 1000	"	" 13.5B	" 4 5	15 0x12	" 5	18 0x5	" 4 5	15 0x12	
	5	58+582 0~610 0	"	"	"	R=2 400		"	" 5 0	15 0x12	" 5	18 0x5	5 0	15 0x12	
	6	68+682 8~717 3	34 5	11 0x3	7 5+1 0	Straight		P RCT-11A	6 0	10 0x12	" 4	14 0x4	6 0	10 0x12	
	7	74+398 5~421 5	23 0	11 0x2	7 5			" -11B	5 5	10 0x12	4	14 0x4	5 5	10 0x12	
	8	80+359 0~373 0	14 0	13 5x1	"	R=3000 A 2000		-13.5B	6 0	10 0x14			6 0	10 0x14	
	9	86+910 0~930 0	20 0	9 5x2	"	Straight		" -9.5B	7 0	10 0x14	B P - 4	15 0x4	" 7 0	10 0x14	
	10	87+690 0~710 0	"	"	"	"			7 0	5 0x14	WP - 7	3 0x6	7 0	5 0x14	
	11	98+308 0~322 0	14 0	13 5x1	"			P RCT-13.5B	" 6 0	5 0x14			5 5	5 0x14	
	12	99+443 0~457 0	"	"	"	R=1500			" 6 0	5 0x14			6 0	5 0x14	
	13	100+273 0~287 0	"	"	"	R=1500 A 500		"	" 5 5	5 0x14			5 5	5 0x14	
	14	" +638 0~652 0			"	R=1500		"	" 5 5	5 0x14			5 5	5 0x14	
	15	103+311 0~339 0	28 0	13 5x2	"	R 3000	"		6 0	5 0x14	W P - 7 0	3 0x6	6 0	5 0x14	
	16	106+866 0~894 0			"	R 1500 A 1000			6 5	10 0x16	B P - 5	14 0x5	" 6 0	10 0x14	
	17	116+931 0~959 0			"	R 1500	"		" 5 5	14 0x14	" 5	17 0x5	6 0	14 0x14	Ntandango Rv
	18	117+593 0~607 0	14 0	13 5x1	"	Straight	"	"	" 5 0	10 0x12			5 0	10 0x12	
	19	120+ 43 0~57 0	"	"	"	"	"		" 5 5	10 0x14			5 0	10 0x12	
	20	126+343 0~357 0	"	"	"	R 1000 A 400			7 0	10 0x16			7 0	10 0x16	
	21	128+138 5~161 5	23 0	11 0x2	"	R 1500		P RCT-11 B	" 7 5	10 0x16	B P - 4	14 0x4	7 0	10 0x14	
	22	130+532 8~567 3	34 5	11 0x3	7 5+1 0	R 800		-11A	6 0	10 0x12	" 4	14 0x4	6 0	10 0x12	
	23	136+113 0~127 0	14 0	13 5x1	7 5	Straight		" -13.5B	" 7 5	18 0x18			7 5	18 0x18	
	24	137+495 0~705 0	2 10 0	13 5x15	7 5+1 0			" -13.5A	6 5	16 0x16	B P - 5	20 0x5	6 5	16.0x16	Matandu Rv Flood Opening Br
	25	138+ 46 0~354 0	308 0	13 5x22	"	R=1500		"	7 0	17 0x16	" 5	22 0x5	7 0	18 0x16	" "
	26	" +489 2~570 9	81 7	40 0x2	7 5+1 5	Straight	"	TR-40	7 0	19 0x22	W P - 12 0	12 0x14	6 5	17 0x22	Matandu Rv Main Br
	27	" +744 0~856 0	11 2 0	13 5x8	7 5+1 0			P-RCT-13.5A	" 6.0	13 0x14	B P - 5	17 0x5	7 0	13 0x16	Flood Opening Br
	28	144+440 0~460 0	20 0	9 5x2	7 5	R 1000 A=500	"	" -9.5B	7 0	15 0x14	4	18 0x4	6.5	15 0x14	
	TOTAL		11 8 7 2												
3	29	160+787 8~822.3	34 5	11 0x3	7 5+1 0	R 600 A=400	90	P RCT-11A	WA-5 0	4 0x10	W P - 7 5		WA-5 0	3 5x10	Lingaula Rv
	30	165+561 5~584 5	23 0	11 0x2	7 5	Straight	"	-11B	" 5 0	7 0x10	W P - 7 5	5 0x6	" 5 0	7 0x10	Mbanga Rv
	31	166+991 0~167+19 0	28 0	13 5x2	"	R=1000	"	" 13.5B	" 6 5		9 0		" 7 5		Ukuri Rv
	32	169+643 0~657 0	14 0	13 5x1	"	R=1000			" 5 0				" 5 0		Namitanba Rv
	33	178+865 2	81 7	40 0x2	7 5+1 5	Straight		TR-40	" 8.0	17 0x24	W P - 11 5	18 0x14	7 5	17 0x18	Mavuji Rv Main Br
		~ 179+58 9	11 2 0	13 5x8	7 5+1 0	"		P RCT 13.5A			B P - 5	23 0x5			"
	34	182+573 0~587 0	14 0	13 5x1	7 5		"	C RCT 13.5B	WA-6 0	5 0x14			WA-6 0	5 0x14	
	35	186+390 0~410 0	20 0	9 5x2				9.5B	" 5 5	5 0x12	B P - 4	8 0x4	5 5	5 0x12	
	36	194+592 8~6273	34 5	11 0x3	7 5+1 0	R 1200	"	" 11A	5 0	6 0x10	4	9 5x4	" 5 0	6 0x10	Kiwawa Rv
	37	198+963 0~977 0	14 0	13 5x1	7 5	R=2000	L 70	" -13.5B	6 0	5 0x14			" 5 5	5 0x14	
	38	217+949 0~977 0	28 0	13 5x2		R=1500	90	P RCT-13.5B	7 0	4 0x16	W P - 9.0		7 0	4 0x16	Mandawa Rv
	39	224+301 0~329 0			"	Straight	"		8 5	5 0x22	10 0		6 5	5 0x16	
	40	225+240 0~254 0	14 0	13 5x1	"	"	R 65	C RCT-13.5B	6 5	5 0x16			6 0	5 0x14	
	41	" +418 0~432 0	"	"	"	"	L 70		" 7 0	5 0x16			7 0	5 0x16	
	42	231+391 3~402.8	11 5	11 0x1		R=400 A=300	90	P-RCT 11 B	" 5 0	5 0x10			5 5	5 0x12	Near Matande
	43	235+ 50 0~ 70 0	20 0	9 5x2		R=2000 A 1000	R 65	C RCT-9.5B	6 0	5 0x12	B P - 4	10 0x4	" 6.0	5 0x12	Near Kiranjerange
	TOTAL		49 1 2												
4	44	238+743 0~757 0	14 0	13 5x1	7 5	Straight	L 60	C RCT-13.5B	WA-5 5	5 0x14			WA-5 0	5 0x12	
	45	239+494 3~505 8	11 5	11 0x1	"	R=2000	90	P RCT 11 B	5 0	5 0x10			5 0	5 0x10	
	46	242+588 8	12 2 5	40 0x3	7 5+1 5	Straight		TR-40	4 0		W P -10 5*	15 0x10*	6 5	27 0x16	Mbwemkuru Rv Main Br
		~ 823 2	11 2 0	13 5x8	7 5+1 0	"		P RCT-13.5A			B P - 5	28 5x5			"
	47	243+665 0~735 0	70 0	13 5x5	"				WA-5 5	28 0x14	5	31 5x5	WA-5 0	28 5x12	" Flood Opening Br
	48	253+574 3~585 8	11 5	11 0x1	7 5			P-RCT-11B	8 5	10 0x22			9.0	10.0x22	
	49	255+324 3~335 8	"			R=800			10 0	10 0x25			9 5	10 0x25	
	50	257+ 79 3~ 90 8	"	"		R=1200	R 80	C RCT 11B	8 0	10 0x16			8 0	10 0x16	
	51	270+370 8~405 3	34 5	11 0x3	7 5+1 0	R=2000	R 60	C RCT 11A	5 0	10 0x10	B P - 4	12 0x4	4 5	10 0x10	
	52	" +564 3~575 8	11 5	11 0x1	7 5	R=2000	90	P RCT 11B	5 5	10 0x12			5 0	10 0x10	
	53	274+242 3~253 8				R=800 A 400			6 0	10 0x12			" 6 0	10 0x12	
	54	277+118 5~187 5	69 0	11 0x6	7 5+1 0	R=800 A=300		P RCT-11A	" 7 0	17 0x14	B P - 4	22 5x4	" 7 0	17 0x14	Nanguru Rv
	55	285+ 17 3~ 28 8	11 5	11 0x1	7 5	R=1500	R 70	C RCT-11B	6 5	10 0x14			" 7 5	10 0x16	
	56	289+837 8~872 3	34 5	11 0x3	7 5+1 0	R=1000 A 500	90	P RCT 11A	" 7 0	10 0x14	B P - 4	17 0x 4	8 5	10 0x22	Near Likonge
	57	292+ 44 3~ 55 8	11 5	11 0x1	7 5	R=1500		11B	" 9 0	10 0x22			9.0	10 0x22	
	58	295+983 5~296+65	23 0	11 0x2		R=600		C RCT 11 B	9 0	10 0x22	B P - 4	17 0x4	" 8 5	10 0x22	Mamburu Rv
	59	298+632 8~667 3	34 5	11 0x3	7 5+1 0	R 400		-11A	5 5	11 5x12		15 5x4	" 6 5	11 5x14	Mbanja Rv
	60	302+362 3~373 8	11 5	11 0x1	7 5	Straight	L 45	11B	5 5				5 5		
	61	304+676 0~704 0	28 0	13 5x2		R=1200	L 60	13.5B	10 0	10 0x26	B P - 5	15 0x5	" 10 0	10.0x26	
	62	306+436 0~464 0	"			R=1200	90	P RCT 13.5B	6 5	10 0x16	5	14 0x5	6 5	10 0x16	
	63	308+603 5~626 5	23 0	11 0x2	"	R=600		C-RCT-11 B	5 0	10 0x10	4	14 0x4	4 5	10.0x10	
	TOTAL		69 6 5												
5	64	13+115 0~135 0	20 0	9 5x2	7 5	Straight	90	P RCT 9.5B	WA-5 5	10 0x12	B P - 4	14 0x4	WA-5 0	10 0x10	
TOTAL BRIDGE LENGTH			2428 9												

Notes

1) Superstructure

C (1) RCT (2) -13.5 (3) B (4)
(1) Cast-in-place
(2) R C bridge, T beam
(3) Span length
(4) Without footpath

P (1) RCT (2) - 11 (3) A (4)
(1) Pre-cast
(2) R C bridge, T-beam
(3) Span length
(4) With footpath

TR (1) - 40 (1)
(1) Truss bridge
(2) Span length

2) Abutment -Body

WA (1) - 6 0 (2)
(1) Wall type abutment
(2) Height of body

3) Abutment - Foundation

15 0 (1) x 14 (2)
(1) Pile length (H-shape steel pile)
(2) Number of pile

4) Pier - Body

BP (1) - 4 (2)
(1) Pile bent pier
(2) Number of pile

WP (1) - 6 (2)
(1) Wall type pier
(2) Height of body

5) Pier - Foundation

15 0 (1) x 4 (2)
(1) Pile length (φ 500 steel pile)
(2) Number of pile

6) X Shows Pi pier

2/27

SOUTHERN COASTAL LINK ROAD
BRIDGE DESIGN LIST
MINISTRY OF WORKS

NOTES

REVISIONS

ROADS DIVISION
DIRECTOR OF ROADS
DATE
MW. DRG No

SCALES
HORIZONTAL
VERTICAL

DRG. No
DATE
SHEET 234 OF 269

MATERIAL LIST (I)

SECTION	BRIDGE NO	SUPER - STRUCTURE											SUB - STRUCTURE										REMARKS
		STRUCTURE STEEL (t)	FIELD PAINTING (m²)	CONCRETE(Class A) (m³)		FORM (m²)		REINFORCEMENT (t)	GUARD-RAIL (m)	DRAINAGE (Each)	EXPANSION JOINT (m)	PAVEMENT (m³)	EXCAVATION (m³)	CONCRETE(SITE)(m³)		REINFORCEMENT (t)	STEEL PILE (t)			FORM (m²)	COBBLE STONE (m³)	MASONRY (m²)	
				YARD	SITE	YARD	SITE							CLASS A	CLASS Y		H-400	ø500					
1	1				58		294	12	52	4	16	5	267	170	8	6	62			365	15	150	
	2				65		351	13	64	6	26	7	284	202	13	7	56	11		451	17	100	
	TOTAL				123		645	25	116	10	42	12	551	372	21	13	118	11		816	32	250	
2	3			61	91	432	439	31	93	8	36	13	253	139	15	5	44	21		363	13	80	
	4			69	63	429	306	27	80	6	24	10	248	127	10	5	53	13		308	13	80	
	5			69	63	429	306	27	80	6	24	10	248	142	10	5	53	13		332	13	120	
	6			61	91	432	439	31	93	8	36	13	277	192	16	7	35	16		466	15	150	
	7			40	52	288	258	18	70	6	24	9	272	165	11	6	35	8		388	15	140	
	8			34	32	214	153	13	52	4	16	5	267	170	8	6	41			365	15	150	
	9			31	45	221	225	15	64	6	24	7	296	220	12	8	41	9		460	17	340	
	10			31	45	221	225	15	64	6	24	7	434	258	11	10	21	3		508	21	280	
	11			34	32	214	153	13	52	4	16	5	267	163	8	6	21			354	15	200	
	12			34	32	214	153	13	52	4	16	5	267	170	8	6	21			365	15	150	
	13			34	32	214	153	13	52	4	16	5	267	155	8	6	21			342	15	140	
	14			34	32	214	153	13	52	4	16	5	267	155	8	6	21			342	15	140	
	15			69	63	429	306	27	80	6	24	10	409	218	10	8	21	3		460	19	150	
	16			69	63	429	306	27	80	6	24	10	284	190	12	7	44	10		424	16	150	
	17			69	63	429	306	27	80	6	24	10	272	173	11	6	58	12		400	15	140	
	18			34	32	214	153	13	52	4	16	5	243	132	7	5	35			285	13	120	
	19			34	32	214	153	13	52	4	16	5	255	140	7	5	38			297	14	130	
	20			34	32	214	153	13	52	4	16	5	291	210	9	8	47			414	17	250	
	21			40	52	288	258	18	70	6	24	9	296	226	12	8	44	8		471	17	300	
	22			61	91	432	439	31	93	8	36	13	277	192	16	7	35	16		466	15	150	
	23			34	32	214	153	13	52	4	16	5	291	221	9	8	95			436	17	300	
	24			515	554	3 216	2 592	219	444	32	146	79	361	344	66	12	75	202		1 094	17	600	
	25			755	812	4 717	3 802	321	640	46	210	115	396	441	95	15	82	333		1 470	17	580	
	26	210	3 150		220		913	48	351	10	X	34	709	410	15	15	116	24		709	31	750	X included in STRUCTURE STEEL
	27			274	295	1 715	1 382	117	248	18	73	42	314	267	37	9	57	87		742	16	670	
	28			31	45	221	225	15	64	6	24	7	296	210	12	8	62	10		448	17	300	
	TOTAL	210	3 150	2 551	2 996	16 254	14 104	1 131	3 162	226	921	443	8 057	5 430	443	197	1 216	788		12 709	423	6 560	
3	29			61	91	432	439	31	93	8	36	13	527	233	9	9	11			491	17	80	
	30			40	52	288	258	18	70	6	24	9	385	181	9	7	21	5		385	17	40	
	31			69	63	429	306	27	80	6	24	10	434	261	11	9				529	21	300	
	32			34	32	214	153	13	52	4	16	5	243	132	7	5				285	13	150	
	33	210	3 150		220		913	48			X	34											X included in STRUCTURE STEEL
				274	295	1 715	1 382	117	575	28	72	42	1165	581	47	21	105	189		1 213	37	1 100	
	34				58		294	12	52	4	16	5	267	170	8	6	21			365	15	150	
	35				65		351	13	64	6	24	7	272	165	11	6	18	5		388	15	150	
	36				137		705	25	93	8	36	13	253	154	15	5	18	11		386	13	80	
	37				58		294	12	52	4	17	5	267	173	9	6	21			377	16	120	
	38			69	63	429	306	27	80	6	24	10	434	265	11	10	19			530	21	80	
	39			69	63	429	306	27	80	6	24	10	444	281	11	10	28			563	22	350	
	40				58		294	12	52	4	18	5	279	199	9	8	22			417	18	180	
	41				58		294	12	52	4	17	5	291	223	10	9	24			441	18	300	
	42			20	26	144	129	9	47	4	16	4	255	140	7	5	16			297	14	150	
	43				65		351	13	64	6	26	7	272	199	12	8	18	6		455	17	170	
	TOTAL	210	3 150	636	1 404	4 080	6 775	416	1 506	104	390	184	5 788	3 357	186	124	342	216		7 122	274	3 400	
4	44				58		294	12	52	4	18	5	255	162	8	6	19			343	16	150	
	45			20	26	144	129	9	47	4	16	4	243	132	7	5	15			285	13	150	
	46	315	4 725		330		1 370	73			X	51											X included in STRUCTURE STEEL
				274	295	1 715	1 382	117	738	32	72	42	1 528	572	50	22	64	238		1 169	43	450	
	47			172	185	1 072	864	73	164	12	55	26	275	184	24	6	108	91		498	14	300	
	48			20	26	144	129	9	47	4	16	4	312	273	10	9	65			531	19	450	

SOUTHERN COASTAL LINK ROAD

MATERIAL LIST OF BRIDGES(I)

MINISTRY OF WORKS

NOTES

REVISIONS

ROADS DIVISION

DIRECTOR OF ROADS .....

DATE .....

MW, DRG. No.

SCALES

HORIZONTAL

VERTICAL

DRG.No.

DATE

SHEET 235 OF 269

MATERIAL LIST (2)

SECTION	BRIDGE NO	SUPER - STRUCTURE											SUB - STRUCTURE										REMARKS
		STRUCTURE STEEL (t)	FIELD PAINTING (m^2)	CONCRETE (Class A) (m^3)		FORM (m^2)		REINFORCEMENT (t)	GUARD-RAIL (m)	DRAINAGE (Each)	EXPANSION JOINT (m)	PAVEMENT (m^3)	EXCAVATION (m^3)	CONCRETE (SITE) (m^3)		REINFORCEMENT (t)	STEEL PILE (t)			FORM (m^2)	COBBLE STONE (m^2)	MASONRY (m^2)	
				YARD	SITE	YARD	SITE							CLASS A	CLASS Y		H-400	φ 500					
4	49			20	26	144	129	9	47	4	16	4	312	303	10	11	74			577	19	450	
	50				41		220	8	47	4	16	4	291	243	9	9	47			502	17	300	
	51				137		705	25	93	8	42	13	253	169	17	6	29	14		432	15	120	
	52			20	26	144	129	9	47	4	16	4	255	140	7	5	32			297	14	150	
	53			20	26	144	129	9	47	4	16	4	267	170	8	6	35			365	15	80	
	54			121	182	865	878	62	162	14	64	26	316	265	29	9	70	65		665	17	630	
	55				41		220	8	47	4	17	4	291	219	10	9	44			440	18	180	
	56			61	91	432	439	31	93	8	36	13	312	255	17	9	53	20		549	18	250	
	57			20	26	144	129	9	47	4	16	4	312	285	10	10	65			543	19	340	
	58				82		439	16	70	6	24	9	317	283	13	10	65	10		577	19	300	
	59				137		705	25	93	8	36	13	289	195	16	7	44	18		467	16	60	
	60				41		220	8	47	4	23	4	267	219	11	8				484	21	90	
	61				116		588	23	80	6	28	10	317	368	15	13	76	11		733	22	180	
	62			69	63	429	306	27	80	6	24	10	296	200	12	7	47	10		436	17	180	
	63				82		439	16	70	6	24	9	248	134	11	5	29	8		320	13	120	
	TOTAL	315	4 725	817	2 037	5 377	9 843	578	2 118	156	575	263	6 956	4 771	294	172	981	485		10 213	365	4 930	
5	64			31	45	221	225	15	64	6	24	7	260	150	11	5	32	8		343	14	150	
	TOTAL			31	45	221	225	15	64	6	24	7	260	150	11	5	32	8		343	14	150	
GRAND TOTAL		735	11 025	4 035	6 605	25 932	31 592	2 165	6 966	502	1 952	909	21 612	14 081	955	511	2 689	1 508		31 203	1 108	15 290	

SOUTHERN COASTAL LINK ROAD

MATERIAL LIST OF BRIDGES (2)

MINISTRY OF WORKS

NOTES

REVISIONS

ROADS DIVISION

DIRECTOR OF ROADS .....

DATE .....

MW. DRG. No.

SCALES

HORIZONTAL

VERTICAL

DRG. No.

DATE

SHEET 236 OF 269

C-RCT-9.5B

SEC A-A

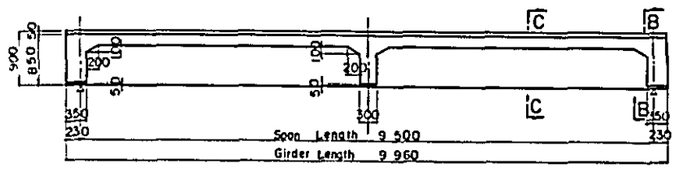

SEC. B-B SEC. C-C

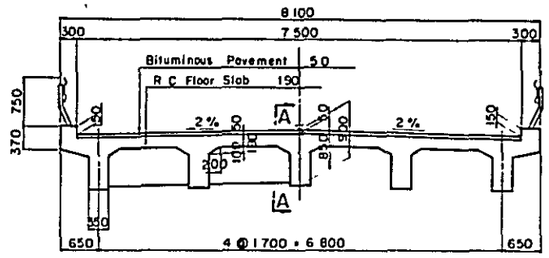

C-RCT-11.0A

SEC A-A

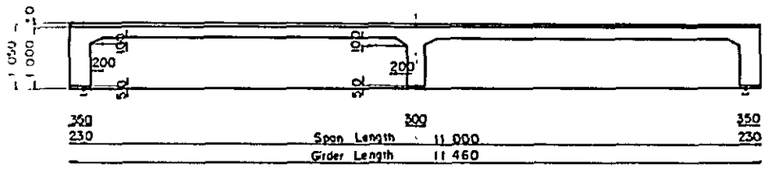

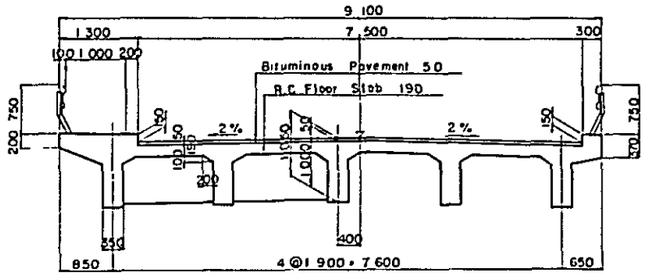

C-RCT-11.0B

SEC A-A

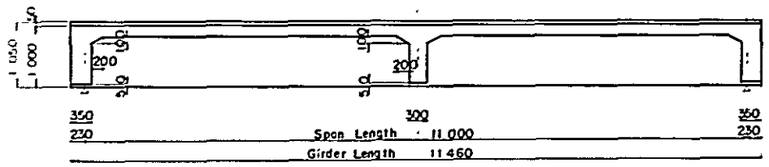

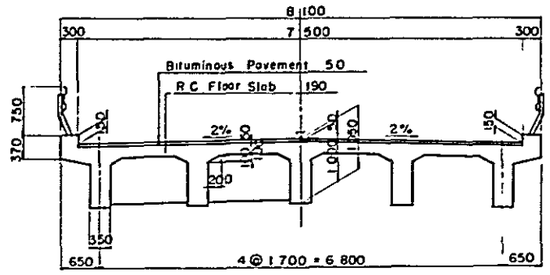

C-RCT-13.5B

SEC. A-A

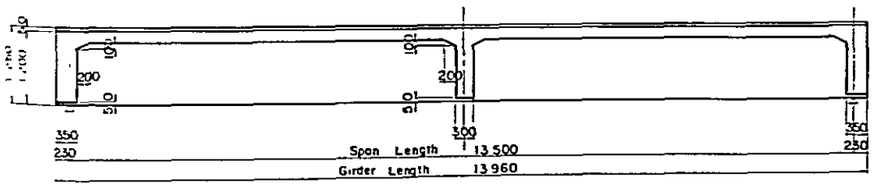

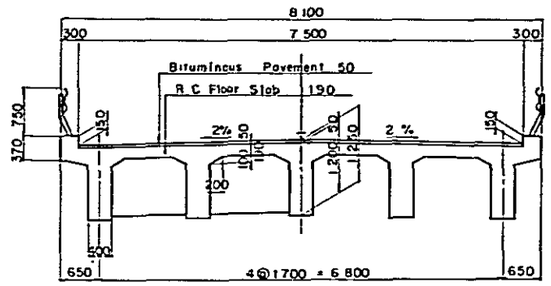

MATERIALS (PER ONE SPAN)

TYPE	DESCRIPTION	UNIT	QUANTITY	REMARKS
C-RCT-9.5B	Concrete	m^3	32.7	Class A
	Reinforcement	t	6.3	
	Form	m^2	175.7	
C-RCT-11.0A	Concrete	m^3	45.5	Class A
	Reinforcement	t	8.4	
	Form	m^2	235.0	
C-RCT 11.0B	Concrete	m^3	40.9	Class A
	Reinforcement	t	7.9	
	Form	m^2	219.5	
C-RCT-13.5B	Concrete	m^3	58.2	Class A
	Reinforcement	t	11.7	
	Form	m^2	294.1	

SOUTHERN COASTAL LINK ROAD

R.C. STANDARD BRIDGE (CAST IN PLACE TYPE)

MINISTRY OF WORKS

NOTES

REVISIONS

ROADS DIVISION
DIRECTOR OF ROADS .....
DATE .....
MW, DRG. No.

SCALES
HORIZONTAL 1:50
VERTICAL 1:50

DRG. No.
DATE
SHEET 237 OF 269

P-RCT-9.5B

SEC. A-A

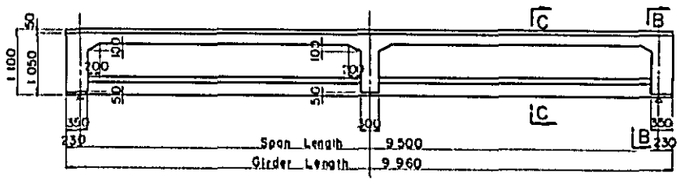

SEC B-B SEC C-C

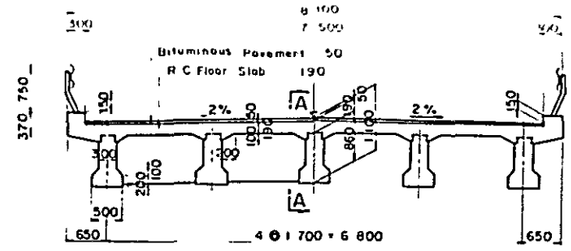

P-RCT-11.0A

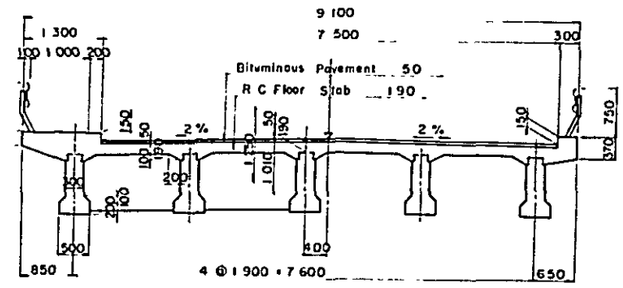

P-RCT-11.0A, P-RCT-11.0B

SEC. A-A

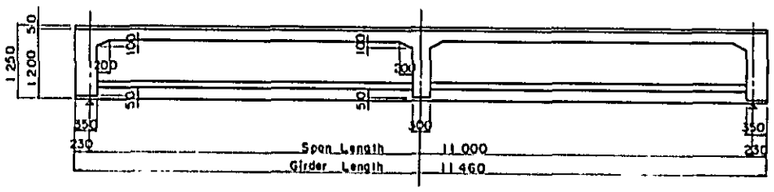

P-RCT-11.0B

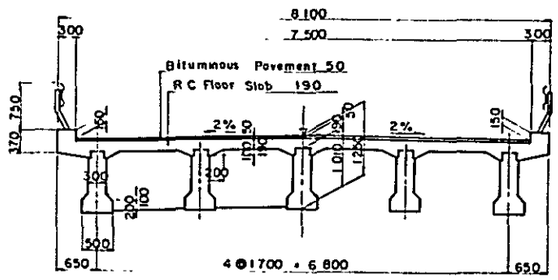

P-RCT-13.5A

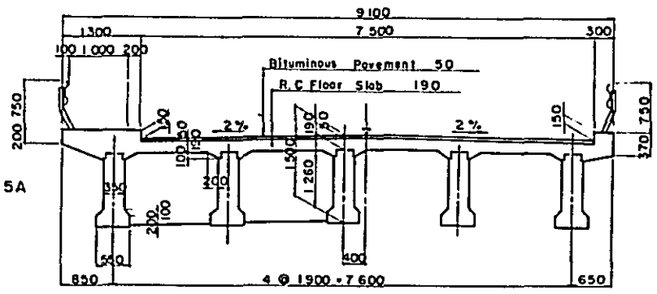

P-RCT-13.5A, P-RCT-13.5B

SEC A-A

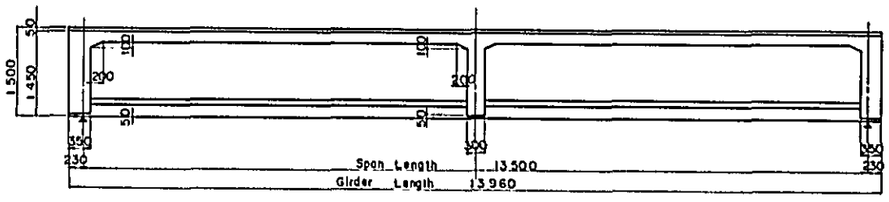

P-RCT-13.5B

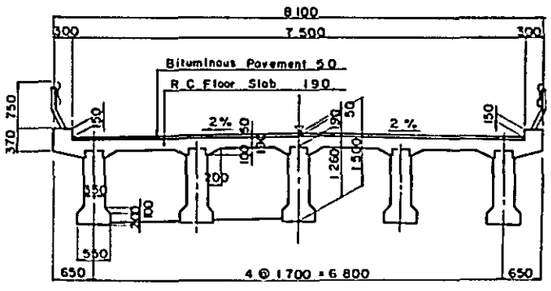

MATERIALS (PER ONE SPAN)

DESCRIPTION		UNIT	QUANTITY					REMARKS
			P-RCT-9.5B	P-RCT-11.0A	P-RCT-11.0B	P-RCT-13.5A	P-RCT-13.5B	
Concrete	yard	m³	15.3	20.2	20.2	34.3	34.3	Class A
	Site	"	22.3	30.4	25.9	36.9	31.5	"
	Total	"	37.6	50.6	46.1	71.2	65.8	"
Reinforcement	yard	t	3.2	4.2	4.2	7.2	7.2	
	Site	"	4.5	6.1	5.2	7.4	6.3	
	Total	"	7.7	10.3	9.4	14.6	13.5	
Form	yard	m²	110.4	144.1	144.1	214.4	214.4	
	Site	"	112.7	146.4	129.1	172.8	152.9	
	Total	"	223.1	290.5	273.2	387.2	367.3	

----- Precasted at yard

SOUTHERN COASTAL LINK ROAD

RC. STANDARD BRIDGE (PRE-CAST TYPE)

MINISTRY OF WORKS

NOTES

REVISIONS

ROADS DIVISION

DIRECTOR OF ROADS .....

DATE .....

MW. DRG. No.

SCALES

HORIZONTAL 1:50

VERTICAL 1:50

DRG. No.

DATE

SHEET 238 OF 269

ABUTMENT FOR MAIN BRIDGE

FRONT VIEW

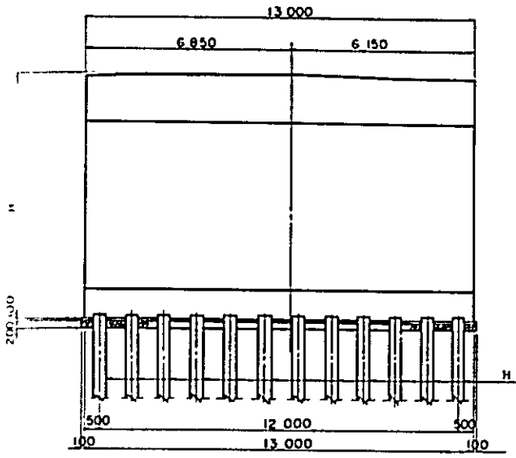

SIDE VIEW

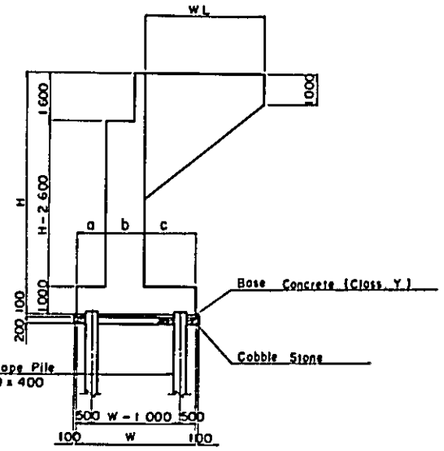

ARRANGEMENT OF PILE

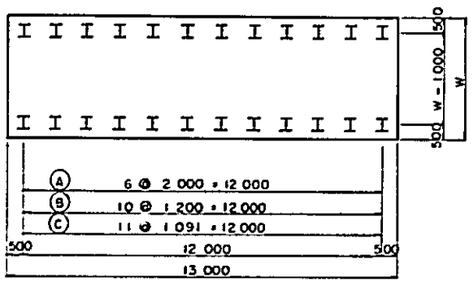

	NUMBER OF PILE
(A)	14
(B)	22
(C)	24

ABUTMENT FOR FLOOD OPENING BRIGE, MEDIUM TO SMALL BRIDGE

FRONT VIEW

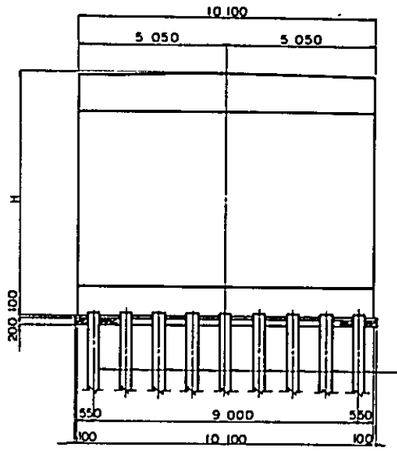

SIDE VIEW

TYPE. A

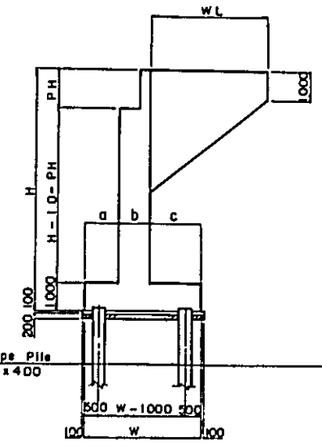

TYPE B

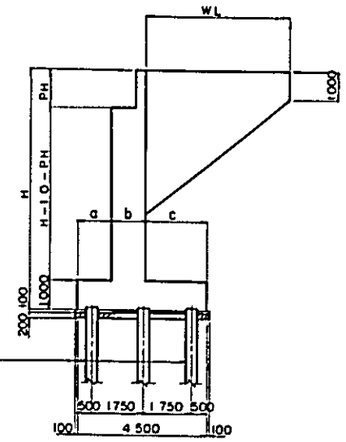

ARRANGEMENT OF PILE

TYPE. A

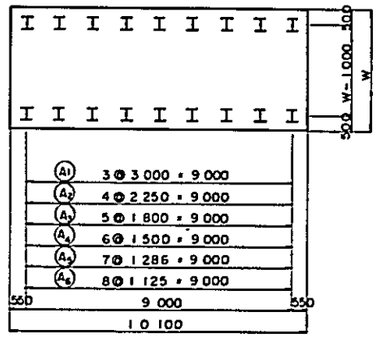

TYPE. B

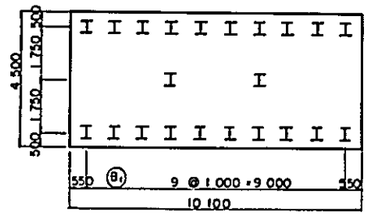

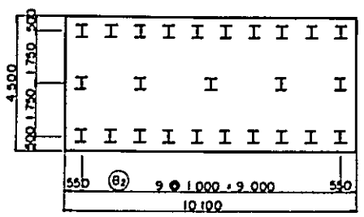

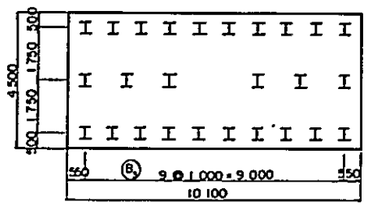

	NUMBER OF PILE
(A1)	8
(A2)	10
(A3)	12
(A4)	14
(A5)	16
(A6)	18
(B1)	22
(B2)	25
(B3)	26

	TYPE OF ABUTMENT	DIMENSION						MATERIAL OF BODY					ARRANGEMENT OF PILE FOUNDATION		
		H (M)	a (M)	b (M)	c (M)	W (M)	WL (M)	CONCRETE (M³) CLASS A	CONCRETE (M³) CLASS Y	REINFORCEMENT (TON)	FORM (M²)	COBBLE STONE (M³)	SPAN 40.0M	SPAN 9.5M, 11.0M	SPAN 13.5M
MAIN BRIDGE	WA — 4.0	4.0	0.7	1.3	1.0	3.0	3.0	73.7	4.2	2.6	144.2	8.4	(A)	—	—
	WA — 6.5	6.5	1.0	1.3	1.7	4.0	4.0	134.6	5.5	4.7	234.3	11.0	(B)	—	—
	WA — 7.0	7.0	1.0	1.3	1.7	4.0	4.0	144.4	5.5	5.0	248.8	11.0	(B)	—	—
	WA — 8.0	8.0	1.0	1.3	1.7	4.0	4.0	158.3	5.5	5.7	277.4	11.0	(C)	—	—
FLOOD OPENING BRIDGE MEDIUM TO SMALL BRIDGE	WA — 4.0	4.0	0.7	1.0	0.8	2.5	3.0	50.8	2.8	1.8	119.5	5.6	—	(A1)	(A1)
	WA — 5.0	5.0	0.8	1.0	1.2	3.0	3.0	66.0	3.3	2.4	142.7	6.6	—	(A2)	(A3)
	WA — 6.0	6.0	1.1	1.0	1.4	3.5	4.0	85.1	3.8	3.1	182.7	7.6	—	(A3)	(A4)
	WA — 7.0	7.0	1.2	1.1	1.7	4.0	4.0	105.0	4.3	3.8	206.8	8.6	—	(A4)	(A5)
	WA — 8.0	8.0	1.2	1.1	1.7	4.0	4.0	116.1	4.3	4.2	229.3	8.6	—	(A5)	(A6)
	WA — 9.0	9.0	1.2	1.2	2.1	4.5	5.0	142.3	4.8	5.2	271.6	9.6	—	(B1)	(B1)
	WA — 10.0	10.0	1.2	1.2	2.1	4.5	5.0	154.4	4.8	5.6	294.2	9.6	—	(B2)	(B3)

SUPERSTRUCTURE CONDITION		PH (M)
SPAN 9.5M	P - RCT	1.15
	C - RCT	0.95
SPAN 11.0M	P - RCT	1.30
	C - RCT	1.10
SPAN 13.5M	P - RCT	1.55
	C - RCT	1.30

Notes;
1. PH ——— Parapet Height
2. Parapet Height depends on Superstructure condition.
3. All materials of concrete are class-A except as noted.

SOUTHERN COASTAL LINK ROAD — STANDARD TYPE OF ABUTMENT — MINISTRY OF WORKS	NOTES	REVISIONS	ROADS DIVISION DIRECTOR OF ROADS ..... DATE ..... MW, DRG. No.		SCALES HORIZONTAL 1:100 VERTICAL 1:100	DRG.No. DATE SHEET 239 OF 269

PIER FOR MAIN BRIDGE
WALL TYPE

FRONT VIEW

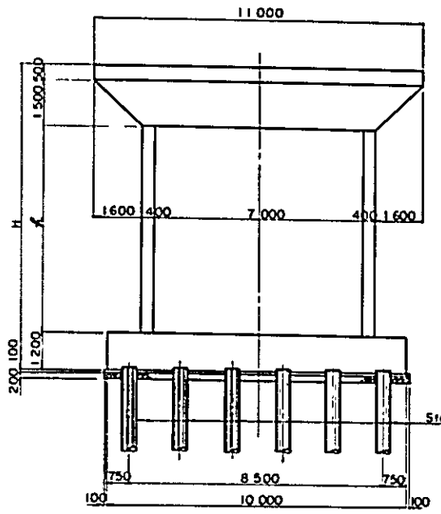

SIDE VIEW

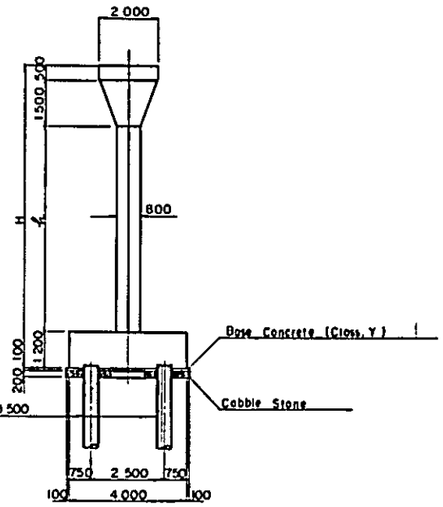

Steel Pipe Pile Ø500

ARRANGEMENT OF PILE

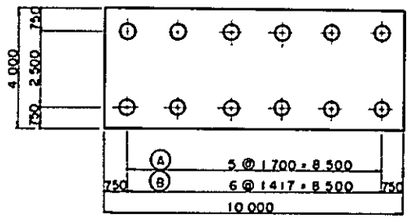

	NUMBER OF PILE
Ⓐ	12
Ⓑ	14

PIER FOR FLOOD OPENING BRIDGE, MEDIUM TO SMALL BRIDGE
WALL TYPE

FRONT VIEW

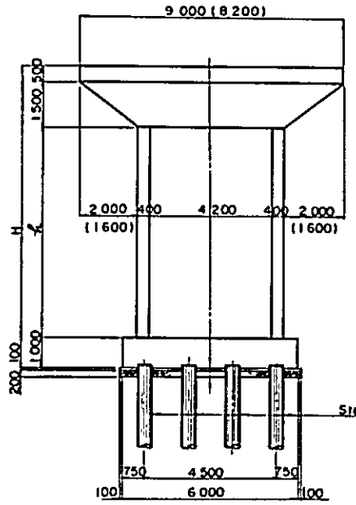

SIDE VIEW

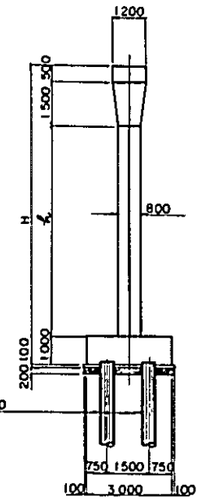

Steel Pipe Pile Ø500

ARRANGEMENT OF PILE

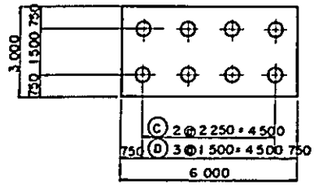

	NUMBER OF PILE
Ⓒ	6
Ⓓ	8

PILE BENT TYPE

FRONT VIEW

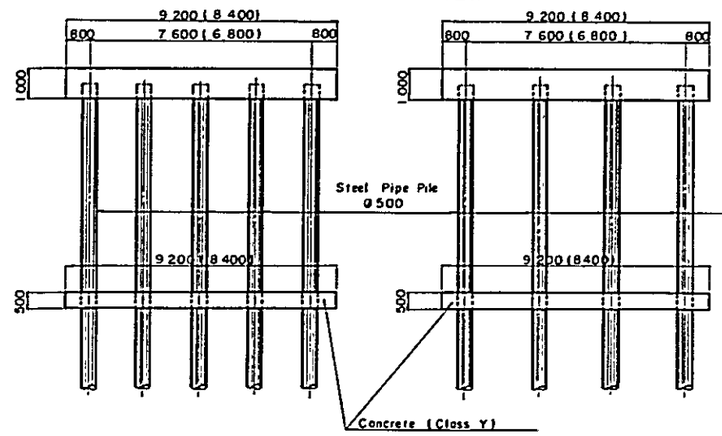

SIDE VIEW

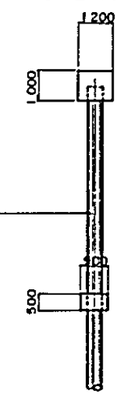

BP-5 ARRANGEMENT OF PILE BP-4

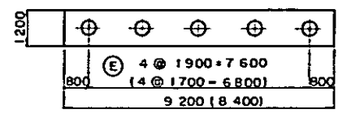

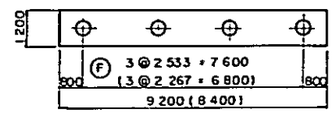

	NUMBER OF PILE
Ⓔ	5
Ⓕ	4

Notes.
1 All materials of Concrete are Class A except as noted
2 ( ) ----- for Without footway

	TYPE OF PIER	DIMENSION H (M)	DIMENSION h (M)	MATERIAL OF BODY: CONCRETE (M³) CLASS A	CONCRETE (M³) CLASS Y	REINFORCEMENT (TON)	FORM (M²)	COBBLE STONE (M³)	ARRANGEMENT OF PILE FOUNDATION: SPAN 40.0M	SPAN 9.5M, 11.0M	SPAN 13.5M
MAIN BRIDGE	WP — 7.0	7.0	3.8	102.3	4.3	4.1	144.9	8.6	Ⓐ	—	—
	WP — 8.0	8.0	4.8	107.3	"	4.3	161.1	"	Ⓐ	—	—
	WP — 10.5	10.5	7.3	122.0	"	4.9	201.8	"	Ⓐ	—	—
	WP — 11.5	11.5	8.3	127.9	"	5.1	218.1		Ⓑ	—	—
	WP — 12.0	12.0	8.8	130.8	"	5.2	226.2		Ⓑ	—	—
FLOOD OPENING BRIDGE MEDIUM TO SMALL BRIDGE	WP — 7.5	7.5	4.5	50.5	2.0	2.1	102.6	4.0	—	Ⓒ	Ⓒ
	X WP — 7.0	7.0	4.0	47.5	"	1.9	94.6	"	—	Ⓒ	Ⓒ
	X WP — 7.5	7.5	4.5	49.4	"	2.0	100.0	"	—	Ⓒ	Ⓒ
	X WP — 9.0	9.0	6.0	54.9	"	2.2	166.0	"	—	Ⓒ	Ⓓ
	X WP — 10.0	10.0	7.0	58.6	"	2.3	126.7	"	—	Ⓒ	Ⓓ
	BP — 4	—	—	11.0	4.1	0.33	48.6	—	—	Ⓕ	—
	BP — 5	—	—	11.0	4.1	0.33	48.3	—	—	—	Ⓔ
	X BP — 4	—	—	10.1	3.8	0.30	44.6	—	—	Ⓕ	—
	X BP — 5	—	—	10.1	3.8	0.30	44.2	—	—	—	Ⓔ

Note
X ——— for without footway

SOUTHERN COASTAL LINK ROAD STANDARD TYPE OF PIER MINISTRY OF WORKS	NOTES	REVISIONS	ROADS DIVISION DIRECTOR OF ROADS ..... DATE ..... MW, DRG. No.		SCALES HORIZONTAL 1 : 100 VERTICAL 1 : 100	DRG. No. DATE SHEET 240 OF 269

SIDE VIEW Scale 1:300

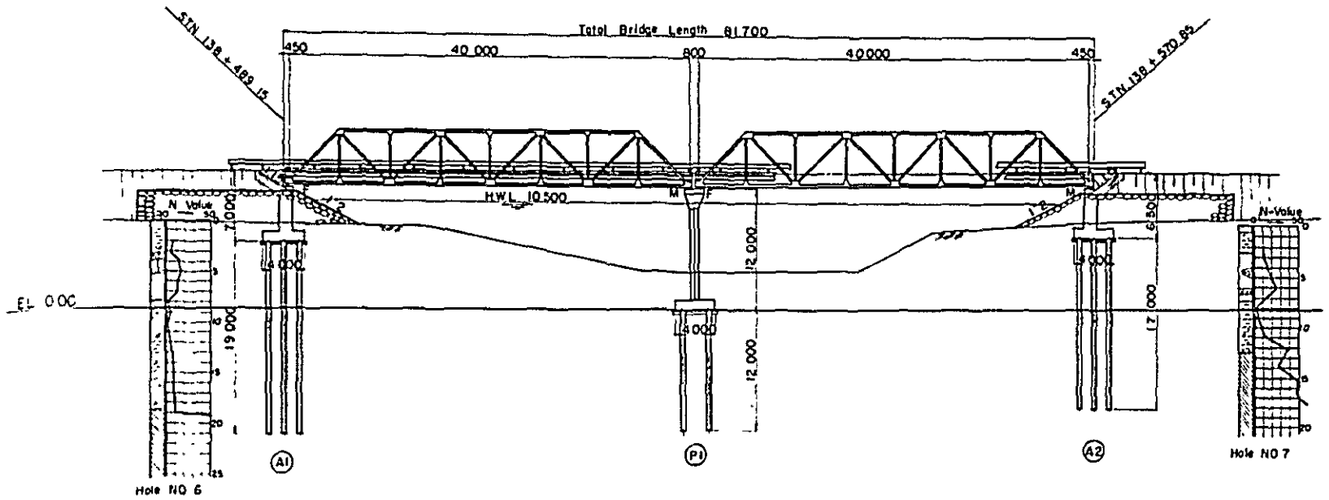

LONGITUDINAL SLOPE (No Scale)	STN 138+500.00 EL +14.00	VCL +500 R = 62 000 / i = −0.500 %	STN 138+750.00 EL +12.75
PROPOSED ROAD LEVEL	13.61	13.56	13.48
GROUND LEVEL	8.30	3.70	8.60
ACCUMULATIVE DISTANCE	138k 489.15	138k 530.00	138k 570.85
DISTANCE	0.00	40.85	40.85
STATION	A1	P1	A2
HORIZONAL ALIGNMENT (No Scale)	STN 138+400.00	R = ∞	STN 139+356.00

PLAN Scale 1:300

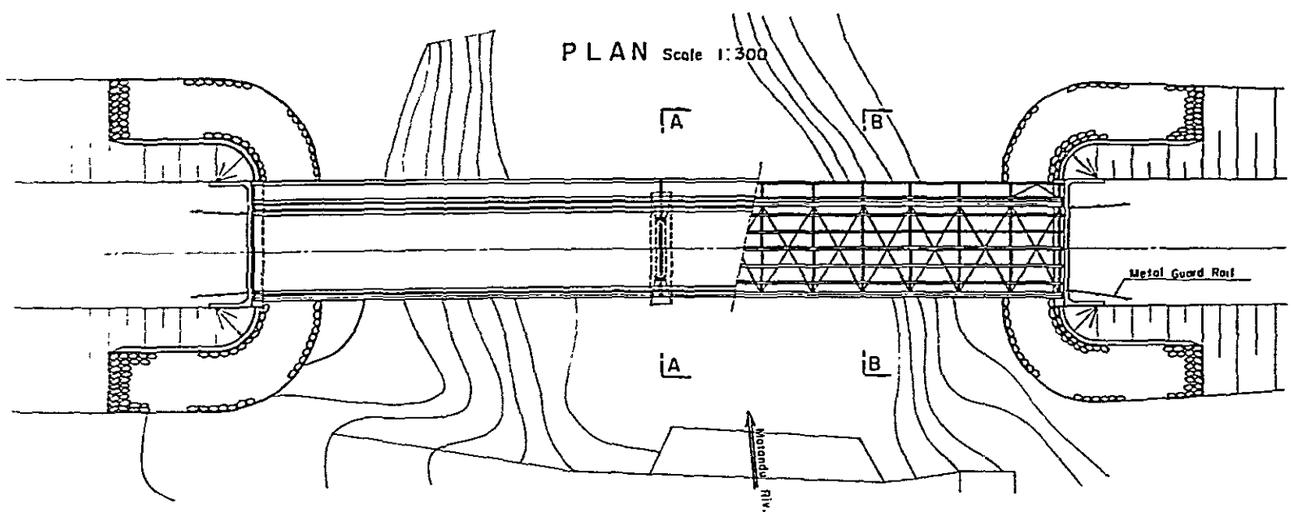

CROSS SECTION Scale 1:90

SEC A−A SEC. B−B

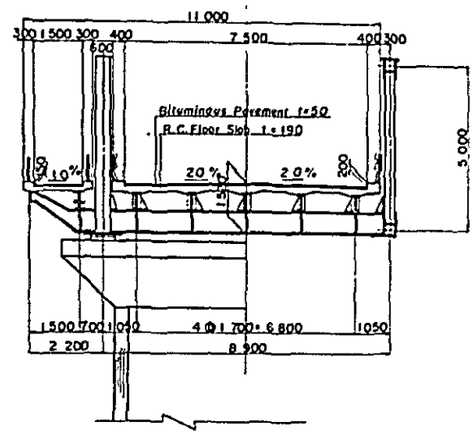

BASIC DESIGN CONDITION

HYDROLOGICAL DATA		756 m^3/s
TOTAL BRIDGE LENGTH		81 700
GIRDER LENGTH		40 700
SPAN LENGTH		40 000
BRIDGE WIDTH		7 500 + 1 500
LIVE LOAD		BS153 PART 3A HA
ROAD ALIGNMENT	VERTICAL	
	HORIZONTAL	R = ∞
STRUCTURE	BRIDGE GIRDER	Steel Truss
	FLOOR SLAB	Cast-in-Place
	SUBSTRUCTURE	"

SOUTHERN COASTAL LINK ROAD — MATANDU Rv MAIN BRIDGE (Br. No 26) MINISTRY OF WORKS	NOTES	REVISIONS	ROADS DIVISION DIRECTOR OF ROADS ..... DATE ..... MW, DRG. No.		SCALES HORIZONTAL VERTICAL	DRG. No. DATE SHEET 241 OF 269

SIDE VIEW Scale 1:300

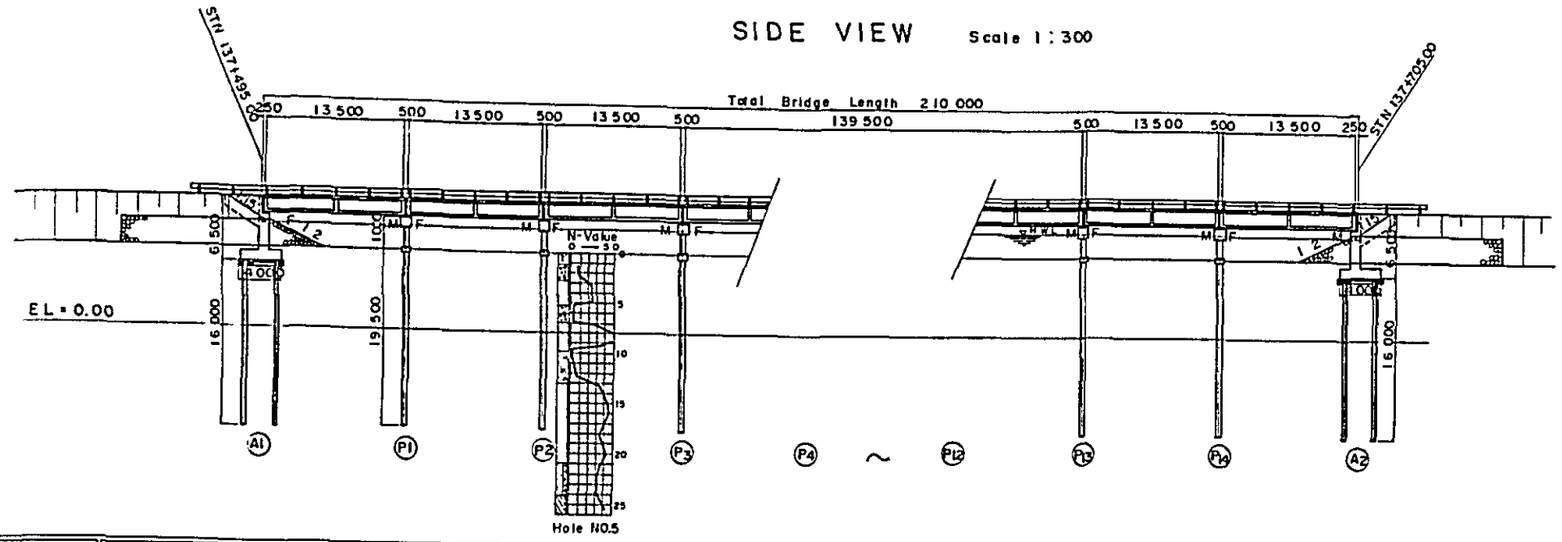

LONGITUDINAL SLOPE (No Scale)	i = + 0.300%	STN 137+450.00 EL. = 12.65	VCL = 300 R = 50 000	STN 137+600.00 EL = 13.10	i = − 0.300%	VCL = 300 R = 50 000	EL = 12.20 STN 137+900.00
PROPOSED ROAD LEVEL	12.76	12.79	12.82	12.84	12.82	12.79	12.76
GROUND LEVEL	7.90	7.90	7.90	7.90	8.00	8.00	8.00
ACCUMULATIVE DISTANCE	137K 495000	137K 509000	137K 523000	137K 537000	137K 677000	137K 691000	137K 705000
DISTANCE	0.00	14.00	14.00	14.00		14.00	14.00
STATION	A1	P1	P2	P3	P12	P13	P14
HORIZONTAL ALIGNMENT (No Scale)	R = 1500	STN 137+330.00	R = ∞		STN 137+877.00	R = 1500	

CROSS SECTION Scale 1:80

SEC A-A SEC. B-B

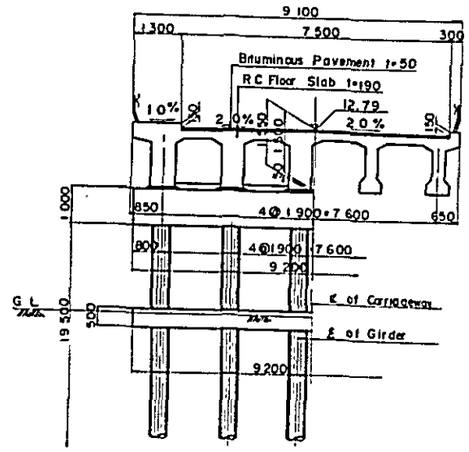

BASIC DESIGN CONDITION

HYDROLOGICAL DATA		1 016 m³/s
TOTAL BRIDGE LENGTH		210 000
GIRDER LENGTH		13 960
SPAN LENGTH		13 500
BRIDGE WIDTH		7 500 + 1000
LIVE LOAD		BS 153 PART 3A HA
ROAD ALIGNMENT	VERTICAL	
	HORIZONTAL	R = ∞
STRUCTURE	BRIDGE GIRDER	Pre - Cast
	FLOOR SLAB	Cast-in-Place
	SUBSTRUCTURE	〃

PLAN Scale 1:300

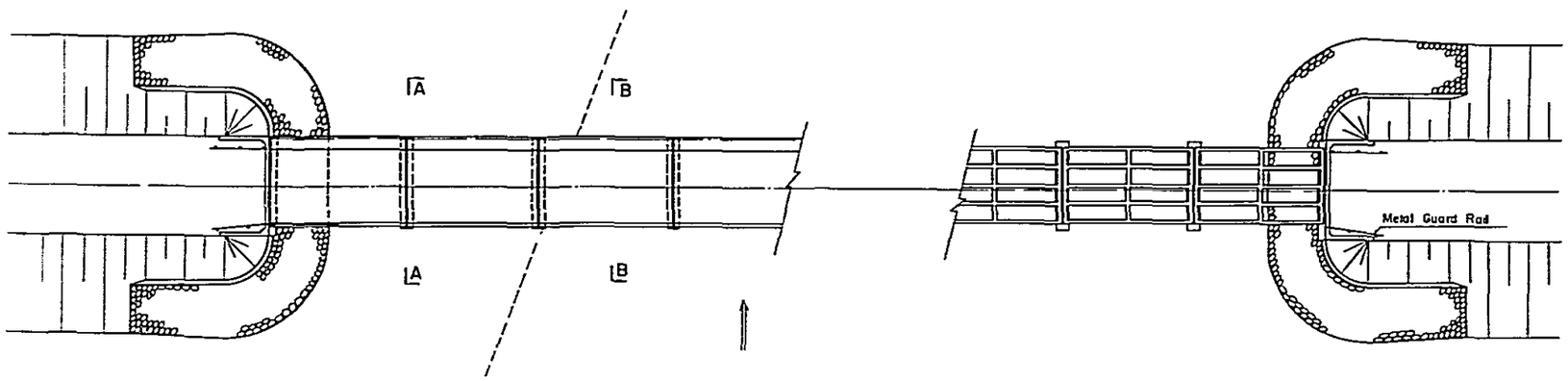

SOUTHERN COASTAL LINK ROAD — MATANDU Rv. FLOOD OPENING BRIDGE (Br. No. 24) MINISTRY OF WORKS	NOTES	REVISIONS	ROADS DIVISION DIRECTOR OF ROADS ..... DATE ..... MW. DRG. No.		SCALES HORIZONTAL VERTICAL	DRG. No. DATE SHEET 242 OF 269

SIDE VIEW Scale 1:300

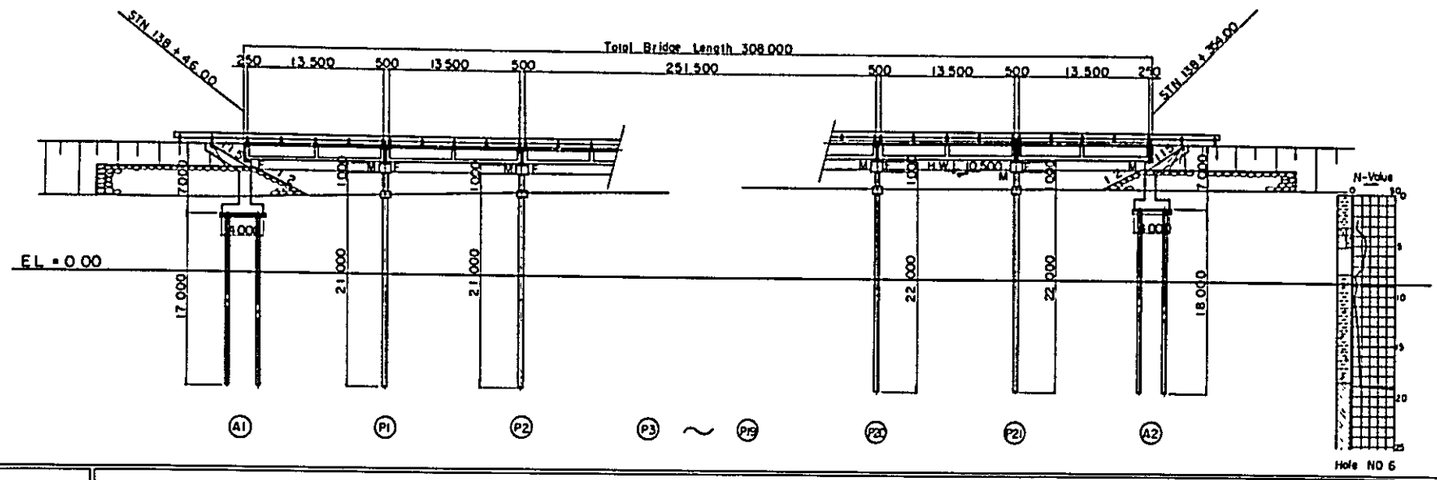

LONGITUDINAL SLOPE (No Scale)	EL=12.20 VCL=300 R=50.000; STN 137+900.00; i=+0.300 %; STN 138+500.00 EL=14.00; VCL=500 R=62.000
PROPOSED ROAD LEVEL	12.64 12.68 12.72 13.47 13.50 13.53
GROUND LEVEL	7.50 7.90 8.10 9.10 9.20 9.10
ACCUMULATIVE DISTANCE	138k 46.00 138k 60.00 138k 74.00 138k 326.00 138k 340.00 138k 354.00
DISTANCE	0.00 14.00 14.00 14.00 14.00
STATION	A1 P1 P2 P20 P21 A2
HORIZONTAL ALIGNMENT (No Scale)	STN 137+87.700; R=1.500; STN 138+400.00

CROSS SECTION Scale 1:80

SEC A-A SEC B-B

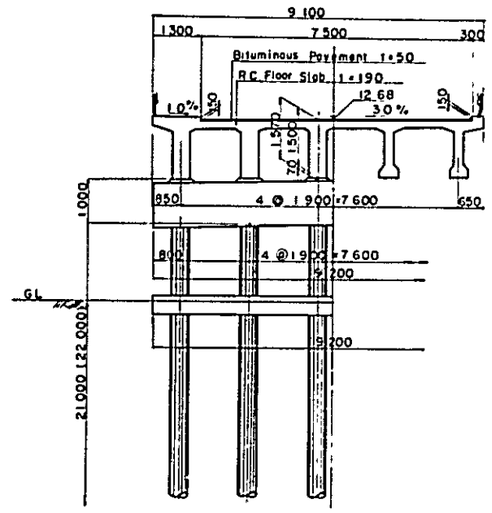

BASIC DESIGN CONDTION

HYDROLOGICAL DATA		604 m³/s
TOTAL BRIDGE LENGTH		308 000
GIRDER LENGTH		13 960
SPAN LENGTH		13 500
BRIDGE WIDTH		7 500 + 1 000
LIVE LOAD		BS153 PART3A HA
ROAD ALIGNMENT	VERTICAL	
	HORIZONTAL	R = 1 500
STRUCTURE	BRIDGE GIRDER	Pre - Cast
	FLOOR SLAB	Cast - in - Place
	SUBSTRUCTURE	"

PLAN Scale 1:300

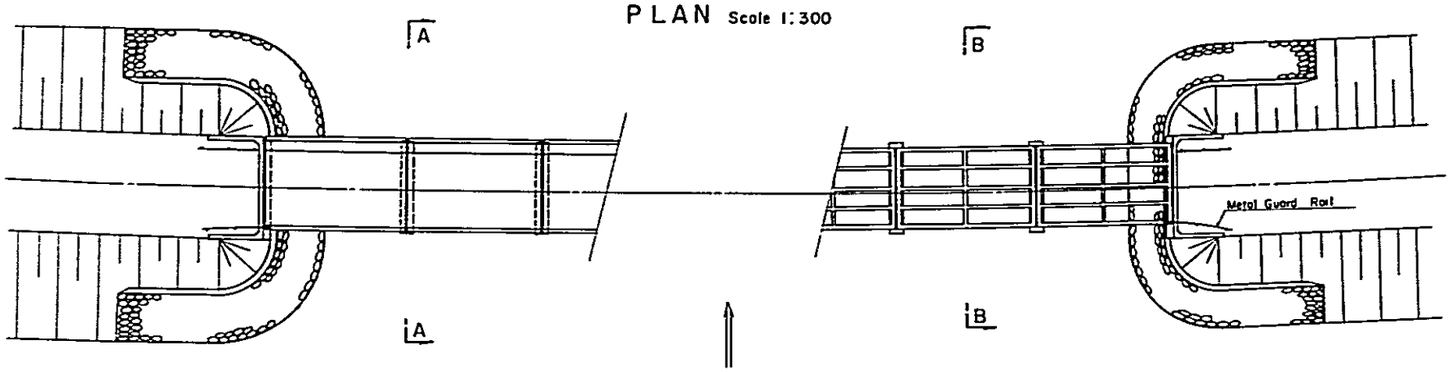

SOUTHERN COASTAL LINK ROAD — MATANDU Rv. FLOOD OPENING BRIDGE (Br. No. 25) MINISTRY OF WORKS	NOTES	REVISIONS	ROADS DIVISION DIRECTOR OF ROADS ..... DATE ..... MW, DRG. No.		SCALES HORIZONTAL VERTICAL	DRG.No. DATE SHEET 243 OF 269

SIDE VIEW Scale 1:300

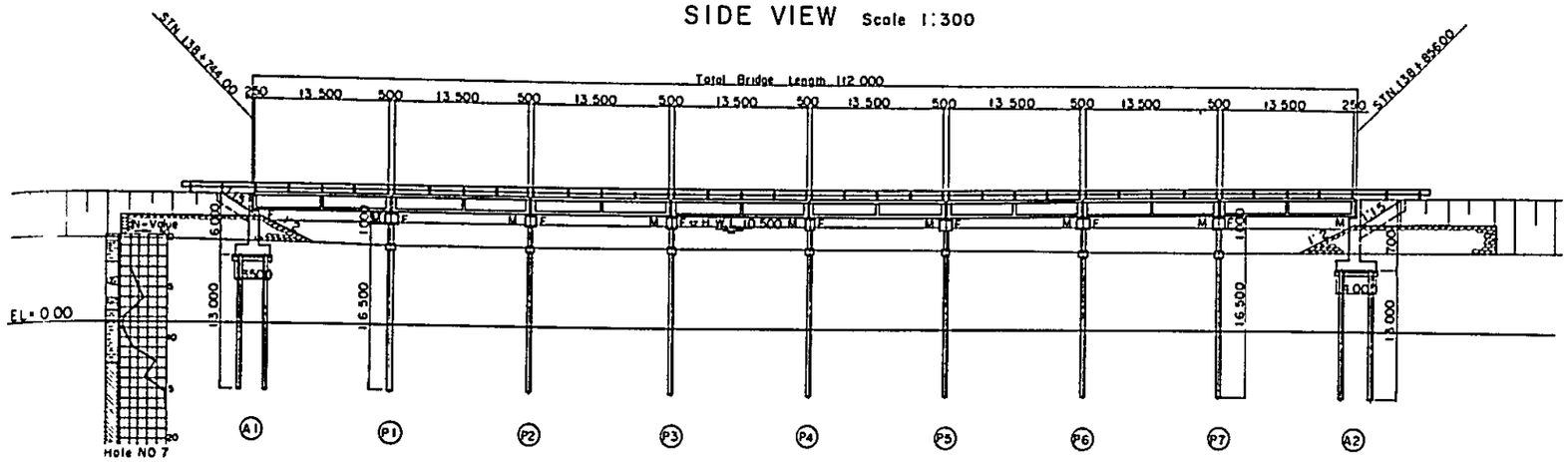

LONGITUDINAL SLOPE (No Scale)	STN 138+750.00 EL = 12.75 ; l = -0.500 % ; VCL = 300 R = 4 900 ; EL = 12.00 STN 138+900.00								
PROPOSED ROAD LEVEL	12.78	12.72	12.69	12.70	12.75	12.85	12.99	13.15	13.36
GROUND LEVEL	8.10	7.80	7.80	7.90	7.90	7.90	7.70	7.70	7.80
ACCUMULATIVE DISTANCE	138k 744.00	138k 758.00	138k 772.00	138k 786.00	138k 800.00	138k 814.00	138k 828.00	138k 842.00	138k 856.00
DISTANCE	0.00	14.00	14.00	14.00	14.00	14.00	14.00	14.00	14.00
STATION	A1	P1	P2	P3	P4	P5	P6	P7	A2
HORIZONTAL ALIGNMENT (No Scale)	STN 138+400.00 ; R = ∞ ; STN 139+356.00								

CROSS SECTION Scale 1:80

SEC A-A SEC B-B

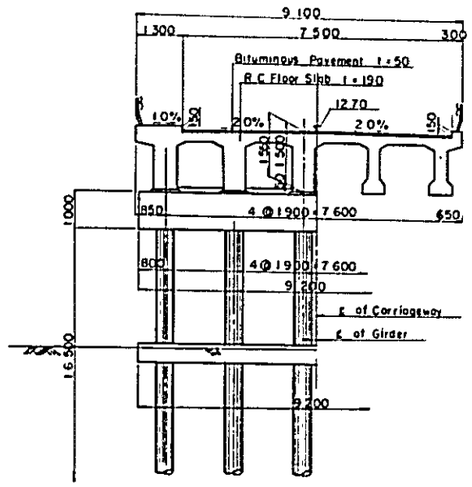

BASIC DESIGN CONDITION

HYDROLOGICAL DATA		312 m³/s
TOTAL BRIDGE LENGTH		112 000
GIRDER LENGTH		13 960
SPAN LENGTH		13 500
BRIDGE WIDTH		7 500 + 1 000
LIVE LOAD		BS153 PART3A HA
ROAD ALIGNMENT	VERTICAL	
	HORIZONTAL	R = ∞
STRUCTURE	BRIDGE GIRDER	Pre - Cast
	FLOOR SLAB	Cast - In - Place
	SUBSTRUCTURE	"

PLAN Scale 1:300

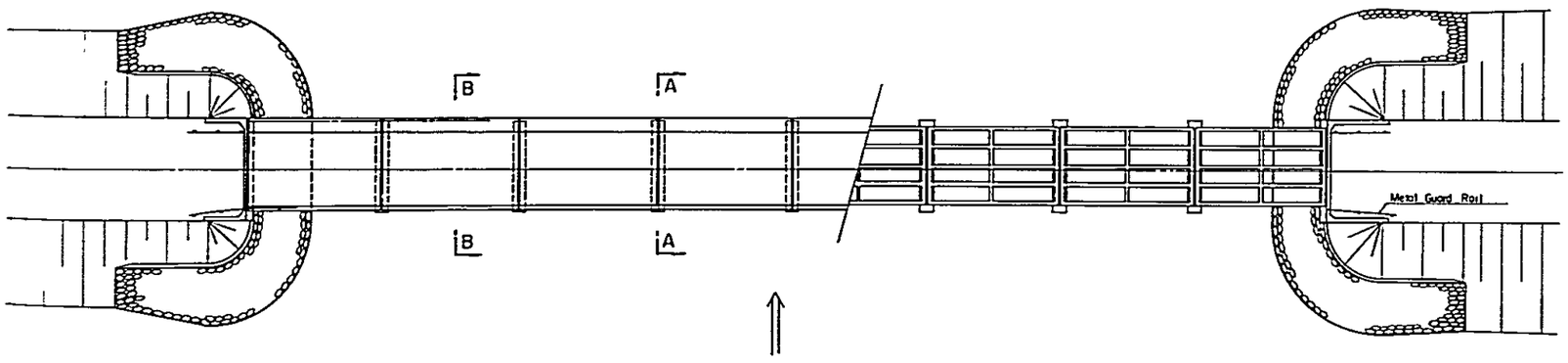

SOUTHERN COASTAL LINK ROAD — MATANDU Rv FLOOD OPENING BRIDGE (Br. No. 27) MINISTRY OF WORKS	NOTES	REVISIONS	ROADS DIVISION DIRECTOR OF ROADS ..... DATE ..... MW, DRG. No.		SCALES HORIZONTAL VERTICAL	DRG. No. DATE SHEET 244 OF 269

SIDE VIEW Scale 1:300

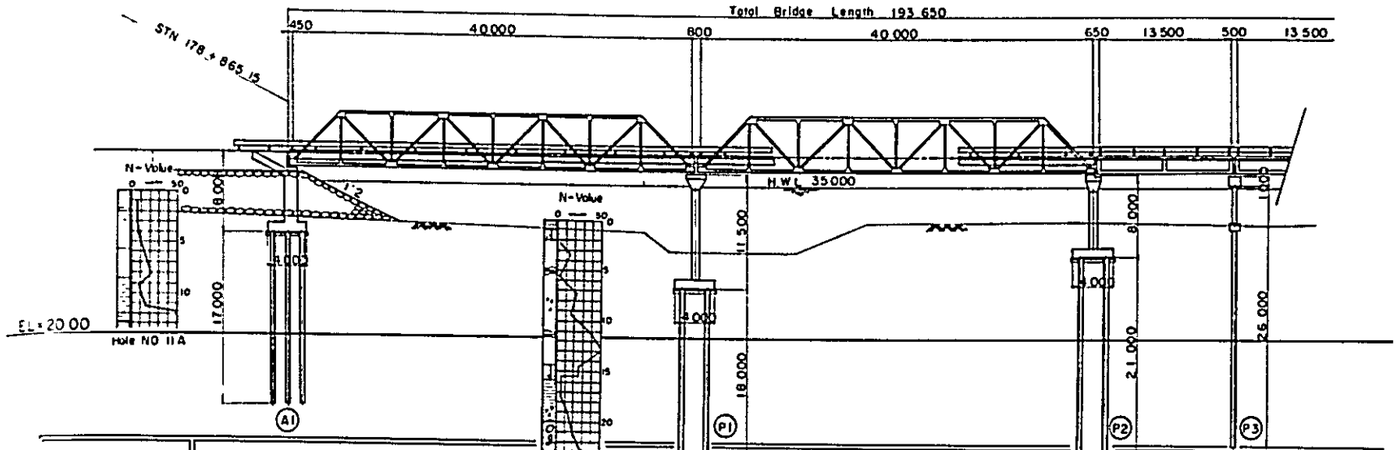

LONGITUDINAL SLOPE (No Scale)	VCL.=300 R=5 700; EL=37.70; STN 178+700.00; i=+0.200 %		STN 179+40.000 EL 39.10; VCL=200 R=14 000	
PROPOSED ROAD LEVEL	38.03	38.11	38.19	38.22
GROUND LEVEL	32.00	29.10	32.10	32.20
ACCUMULATIVE DISTANCE	178k 865.15	178k 906.00	178k 946.85	178k 960.85
DISTANCE	0.00	40.85	40.85	14.00
STATION	A1	P1	P2	P3
HORIZONTAL ALIGNMENT (No Scale)	STN 177+607.00 — R=∞ — STN 179+555.00			

CROSS SECTION Scale 1:90

SEC. A-A SEC. B-B

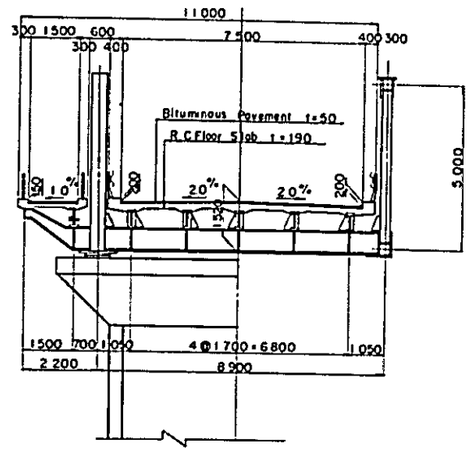

BASIC DESIGN CONDITION

HYDROLOGICAL DATA		1 070
TOTAL BRIDGE LENGTH		193 650
GIRDER LENGTH		40 700
SPAN LENGTH		40 000
BRIDGE WIDTH		7 500 +1500
LIVE LOAD		BS153 PART 3A HA
ROAD ALIGNMENT	VERTICAL	
	HORIZONTAL	R=∞
STRUCTURE	BRIDGE GIRDER	Steel Truss
	FLOOR SLAB	Cast-in-Place
	SUBSTRUCTURE	〃

PLAN Scale 1:300

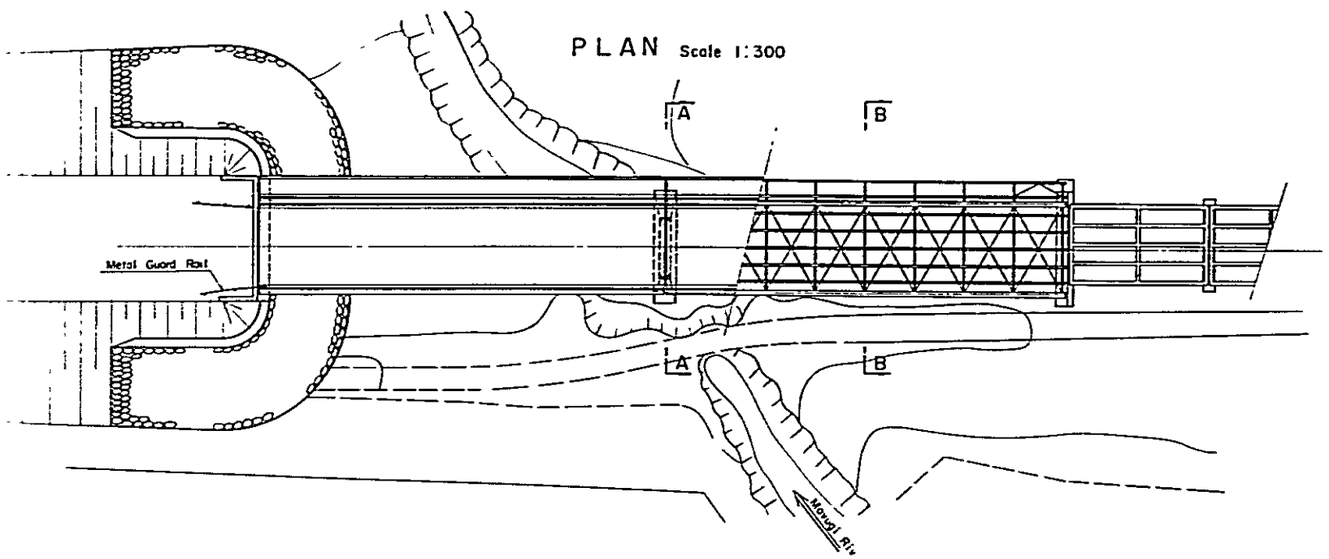

SOUTHERN COASTAL LINK ROAD — MAVUJI Rv MAIN BRIDGE (Br No 33) — MINISTRY OF WORKS	NOTES	REVISIONS	ROADS DIVISION; DIRECTOR OF ROADS ; DATE ; MW, DRG. No.		SCALES; HORIZONTAL; VERTICAL	DRG.No.; DATE; SHEET 245 OF 269

SIDE VIEW Scale 1:300

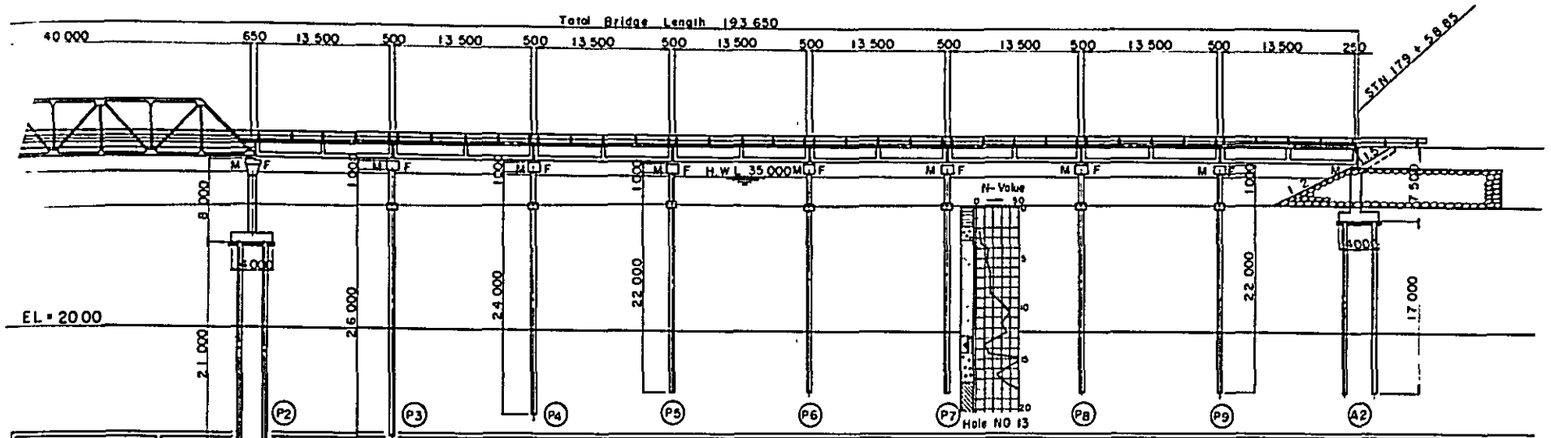

LONGITUDINAL SLOPE (No Scale)	VCL = 300 R = 5 700; EL = 37.70; STN 178 + 70.00; i = + 0.200 %; STN 179 + 400.00 EL. 39.10; VCL = 200 R = 14 000								
PROPOSED ROAD LEVEL	38.19	38.22	38.25	38.28	38.31	38.33	38.36	38.39	38.42
GROUND LEVEL	32.10	32.20	32.30	32.50	32.50	32.50	32.60	32.60	32.60
ACCUMULATIVE DISTANCE	178k 946.85	178k 960.85	178k 974.85	178k 988.85	179k 2.85	179k 16.85	179k 30.85	179k 44.85	179k 58.85
DISTANCE	0.00	14.00	14.00	14.00	14.00	14.00	14.00	14.00	14.00
STATION	P2	P3	P4	P5	P6	P7	P8	P9	A2
HORIZONTAL ALIGNMENT (NO. Scale)	STN 177+607.00; R = ∞; STN 179 + 55.00								

CROSS SECTION Scale 1:80

SEC A-A SEC B-B

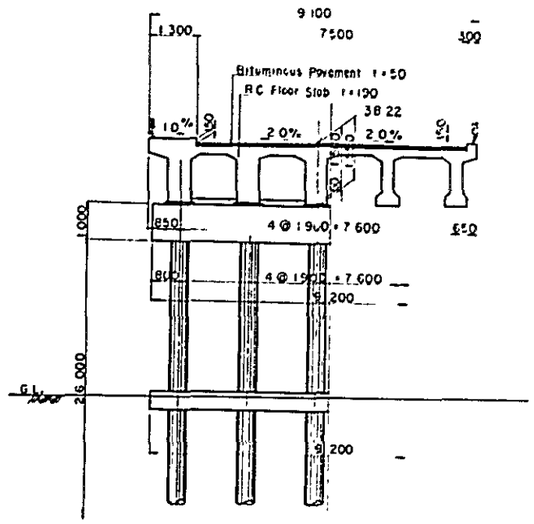

BASIC DESIGN CONDITION

HYDROLOGICAL DATA		1 070
TOTAL BRIDGE LENGTH		193 650
GIRDER LENGTH		13 960
SPAN LENGTH		13 500
BRIDGE WIDTH		7 500 + 1 000
LIVE LOAD		BS153 PART3A HA
ROAD ALIGNMENT	VERTICAL	
	HORIZONTAL	R = ∞
STRUCTURE	BRIDGE GIRDER	Pre - Cast
	FLOOR SLAB	Cast-in - Place
	SUBSTRUCTURE	"

PLAN Scale 1:300

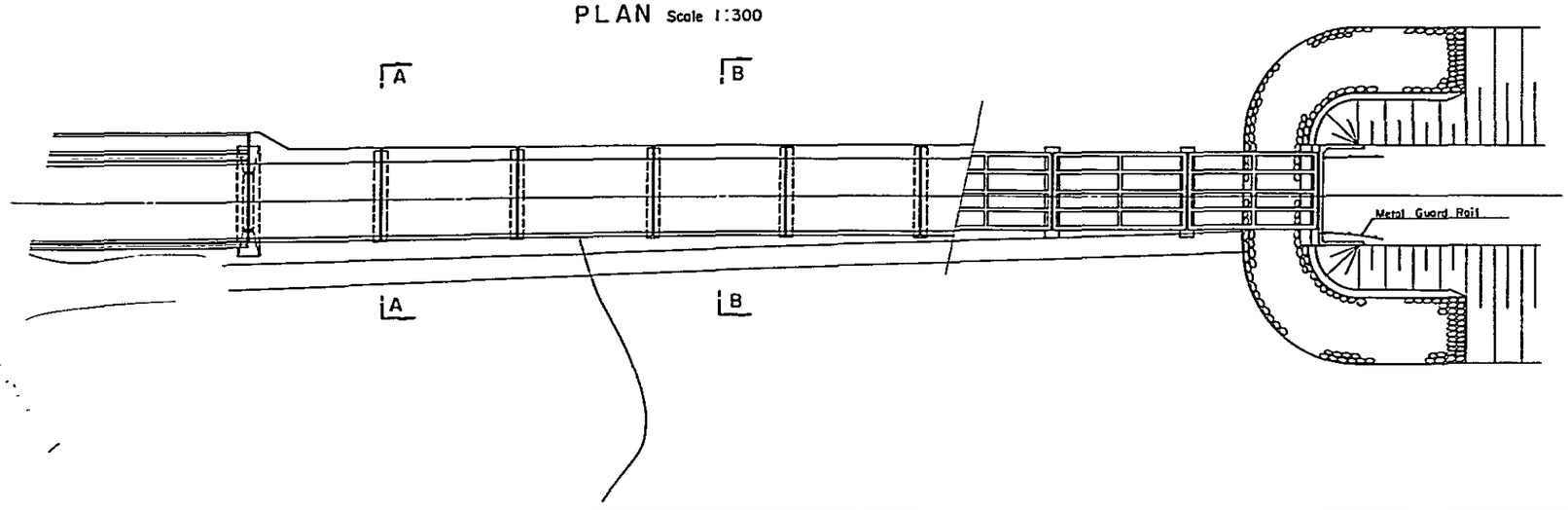

SOUTHERN COASTAL LINK ROAD MAVUJI Rv. FLOOD OPENING BRIDGE (Br. No.33) MINISTRY OF WORKS	NOTES	REVISIONS	ROADS DIVISION DIRECTOR OF ROADS ..... DATE ..... MW, DRG. No.	SCALES HORIZONTAL VERTICAL	DRG.No. DATE SHEET 246 OF 269

SIDE VIEW Scale 1:300

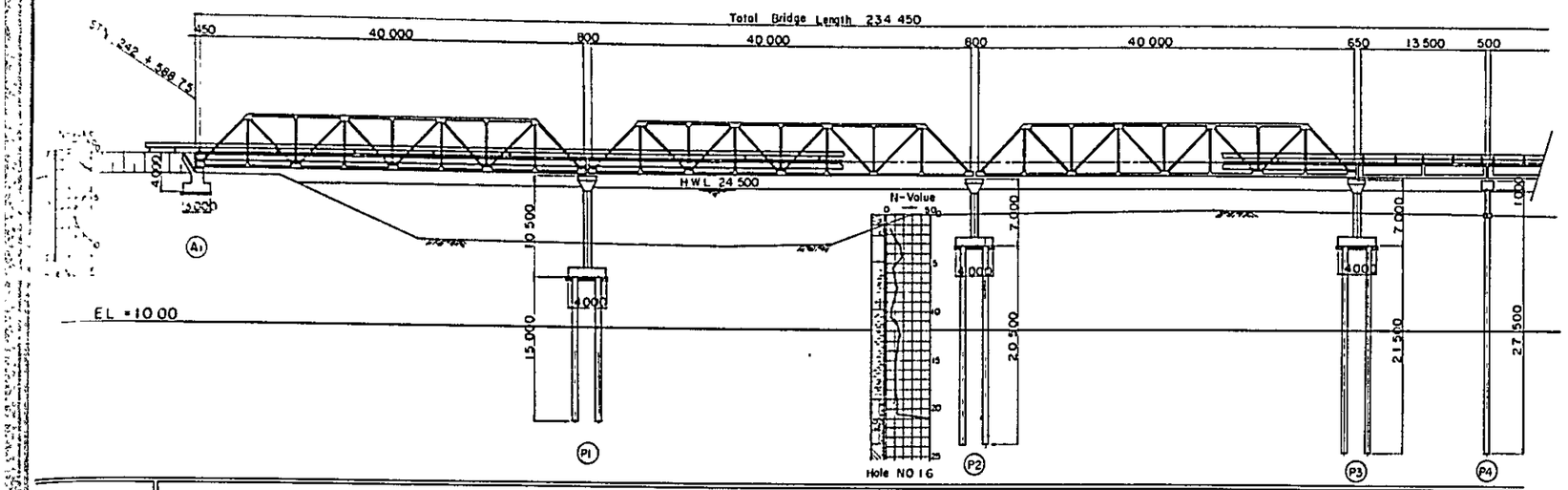

LONGITUDINAL SLOPE (No Scale)	EL = 25 80 STN 242 + 450 00	VCL = 400 R = 23 000	STN 242 + 650 00 EL = 28 30	STN. 242 + 850 00	EL = 27 35
PROPOSED ROAD LEVEL	27 12	27 35	27 51	27 59	27 61
GROUND LEVEL	26 90	18 80	22 00	22 40	22.30
ACCUMULATIVE DISTANCE	242k 588 75	242k 629 60	242k 670 40	242k 711 20	242k 725.20
DISTANCE	0 00	40 85	40 80	40.80	14 00
STATION	A1	P1	P2	P3	P4
HORIZONTAL ALIGNMENT (No Scale)	STN 241 + 832 00	R = ∞			STN 244 + 143 00

CROSS SECTION Scale 1.90

SEC A-A SEC B-B

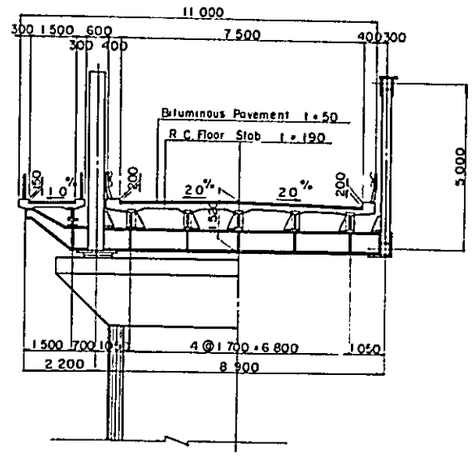

BASIC DESIGN CONDITION

HYDROLOGICAL DATA		1 935 m^3/s
TOTAL BRIDGE LENGTH		234 450
GIRDER LENGTH		40 700
SPAN LENGTH		40 000
BRIDGE WIDTH		7 500 + 1 500
LIVE LOAD		BS153 PART3A HA
ROAD ALIGNMENT	VERTICAL	
	HORIZONTAL	R = ∞
STRUCTURE	BRIDGE GIRDER	Steel Truss
	FLOOR SLAB	Cast - in Place
	SUBSTRUCTURE	"

PLAN Scale 1:300

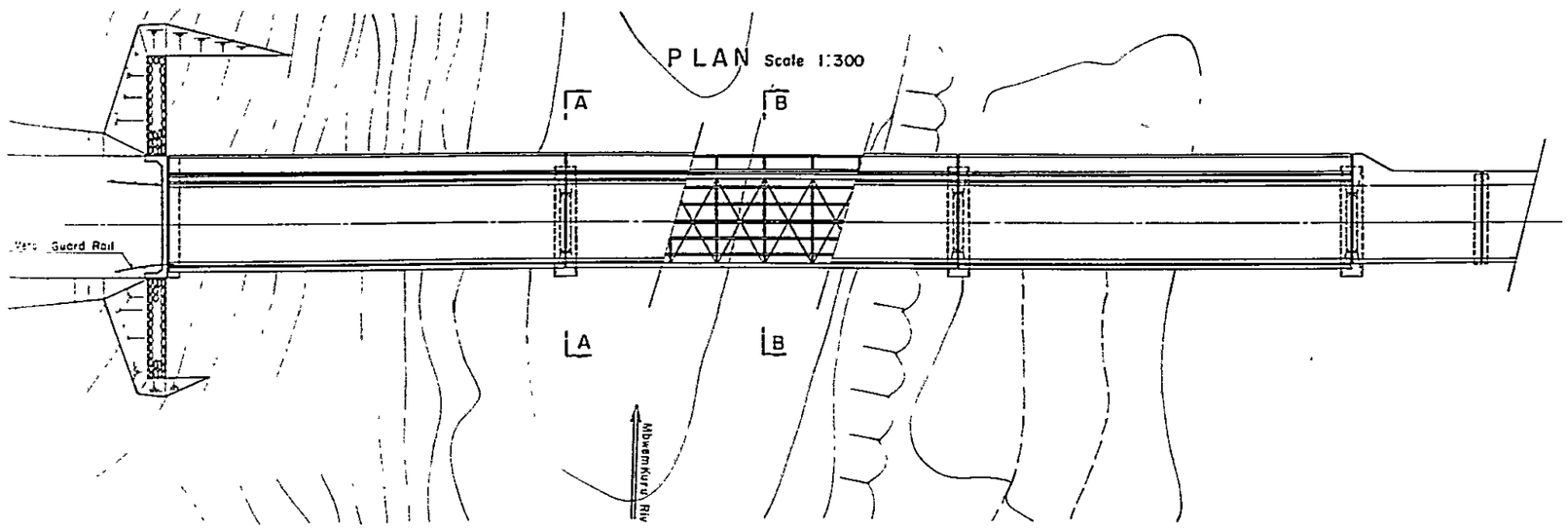

SOUTHERN COASTAL LINK ROAD — MBEMKURU Rv MAIN BRIDGE (Br. No 46) MINISTRY OF WORKS	NOTES	REVISIONS	ROADS DIVISION DIRECTOR OF ROADS ..... DATE ..... MW, DRG. No.		SCALES HORIZONTAL VERTICAL	DRG. No. DATE SHEET 247 OF 269

SIDE VIEW Scale 1:300

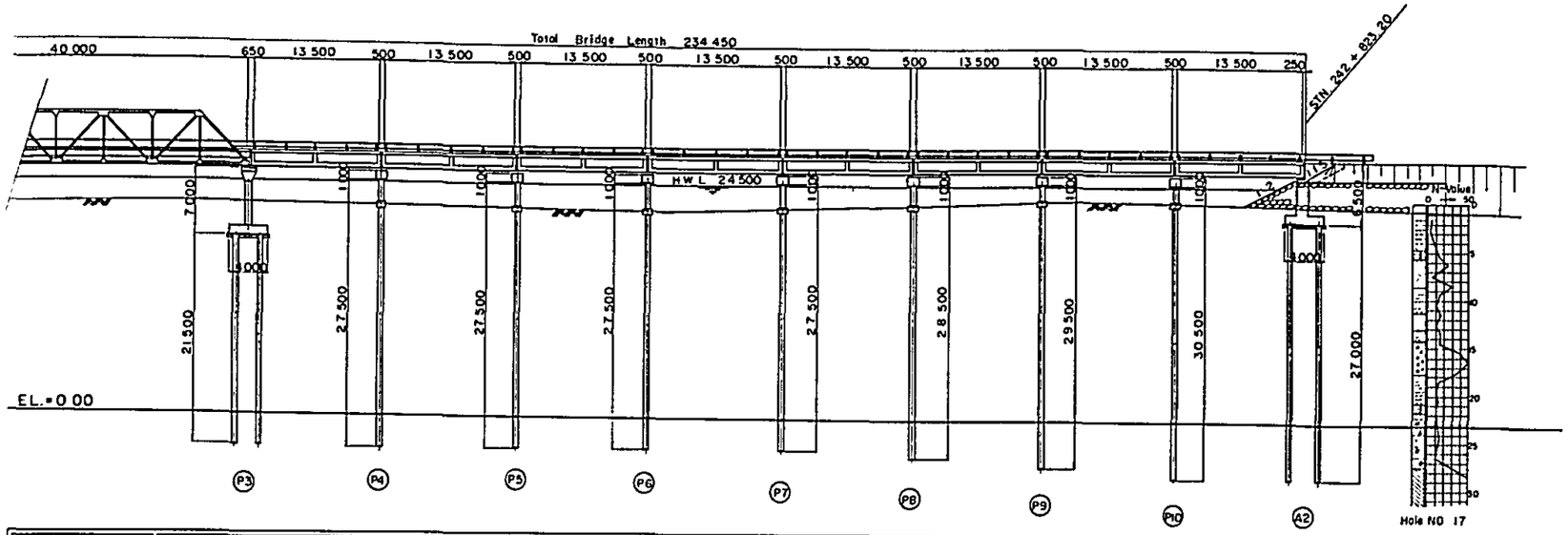

LONGITUDINAL SLOPE (No Scale)	EL=25 80 STN 242 + 450 00			STN 242 + 650 00 EL=26 30 VCL.=400 R=23 000				EL=27 35 STN 242 + 850 00	
PROPOSED ROAD LEVEL	27.59	27.61	27.61	27.61	27.60	27.57	27.55	27.51	27.46
GROUND LEVEL	22.40	22.30	22.10	21.90	22.40	22.70	23.10	23.10	22.60
ACCUMULATIVE DISTANCE	242k 711 20	242k 725 20	242k 739 20	242k 753 20	242k 767.20	242k 781.20	242k 795 20	242k 809 20	242k 823 20
DISTANCE	0 00	14 00	14.00	14 00	14 00	14 00	14 00	14 00	14 00
STATION	P3	P4	P5	P6	P7	P8	P9	P10	A2
HORIZONTAL ALIGNMENT (No Scale)	STN 241+832.00 R=∞ STN 244+143.00								

CROSS SECTION Scale 1:80

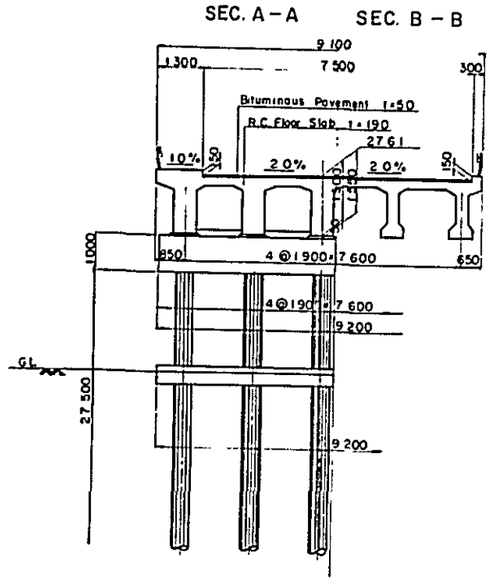

BASIC DESIGN CONDITION

HYDROLOGICAL DATA		1 935 m^3/s
TOTAL BRIDGE LENGTH		234 450
GIRDER LENGTH		13 960
SPAN LENGTH		13 500
BRIDGE WIDTH		7 500 + 1 000
LIVE LOAD		BS153 PART3A HA
ROAD ALIGNMENT	VERTICAL	
	HORIZONTAL	R=∞
STRUCTURE	BRIDGE GIRDER	Pre - Cast
	FLOOR SLAB	Cast-in-Place
	SUBSTRUCTURE	〃

PLAN Sale 1:300

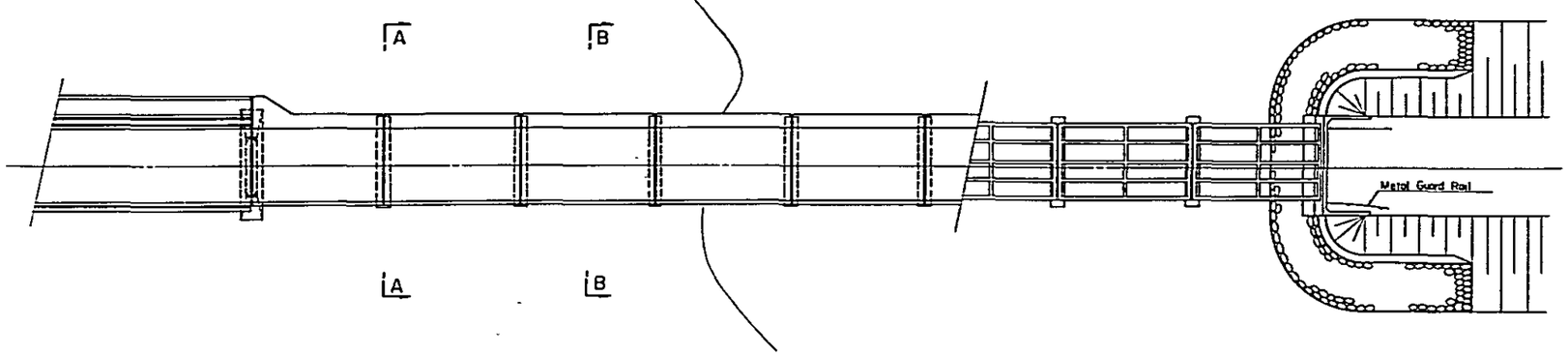

SOUTHERN COASTAL LINK ROAD MBWEMKURU Rv. FOOD OPENING BRIDGE (Br. No. 46) MINISTRY OF WORKS	NOTES	REVISIONS	ROADS DIVISION DIRECTOR OF ROADS ..... DATE ..... MW, DRG. No.		SCALES HORIZONTAL VERTICAL	DRG.No. DATE SHEET 248 OF 269

SIDE VIEW Scale 1:300

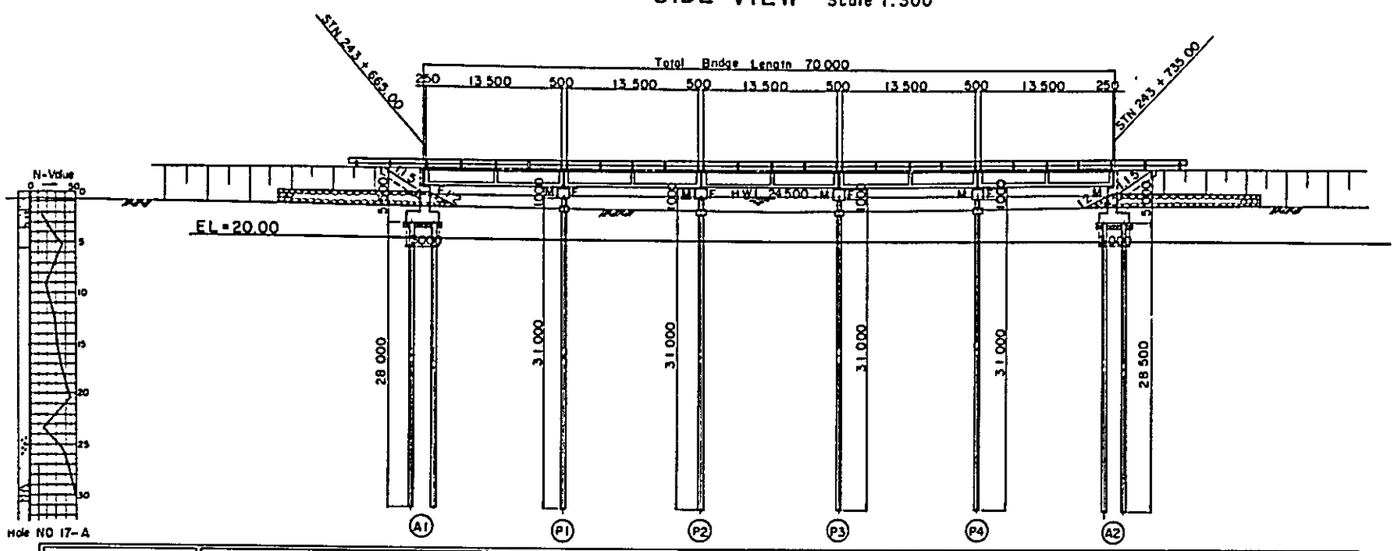

LONGITUDINAL SLOPE (No Scale)	VCL = 300 R = 27 000	i = + 0 340 %	STN 244 + 000.00 EL = 28 00			
	STN 243 + 250.00 EL = 25.45			VCL = 200 R = 2 600		
PROPOSED ROAD LEVEL	26.86	26.91	26.96	27 00	27 05	27 10
GROUND LEVEL	23 15	23 10	23 00	23 10	23 30	23.50
ACCUMULATIVE DISTANCE	243k 665 00	243k 679 00	243k 693 00	243k 707.00	243k 721.00	243k 735 00
DISTANCE	0.00	14 00	14 00	14 00	14.00	14 00
STATION	A1	a1	a2	a3	a4	A2
HORIZONTAL ALIGNMENT (No Scale)	STN 241 + 832.00	R = ∞				STN 244 + 143.00

CROSS SECTION Scale 1:80

SEC A – A SEC B – B

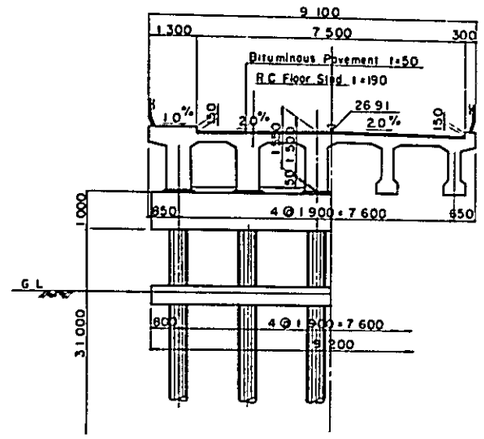

BASIC DESIGN CONDITION

HYDROLOGICAL DATA		126 m³/s
TOTAL BRIDGE LENGTH		70 000
GIRDER LENGTH		13 960
SPAN LENGTH		13 500
BRIDGE WIDTH		7 500 + 1 000
LIVE LOAD		BS153 PART3A HA
ROAD ALIGNMENT	VERTICAL	
	HORIZONTAL	R = ∞
STRUCTURE	BRIDGE GIRDER	Pre - Cast
	FLOOR SLAB	Cast - in - Place
	SUBSTRUTURE	"

PLAN Scale 1:300

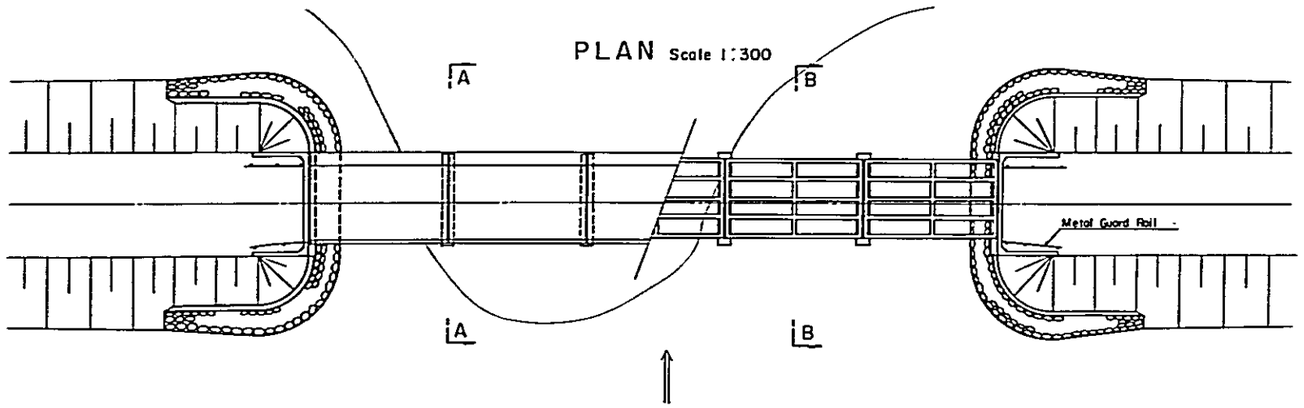

SOUTHERN COASTAL LINK ROAD MBWEMKURU Rv. FLOOD OPENING BRIDGE (Br. No. 47) MINISTRY OF WORKS	NOTES	REVISIONS	ROADS DIVISION DIRECTOR OF ROADS ..... DATE ..... MW, DRG. No.		SCALES HORIZONTAL VERTICAL	DRG. No. DATE SHEET 249 OF 269

SIDE VIEW Scale 1:200

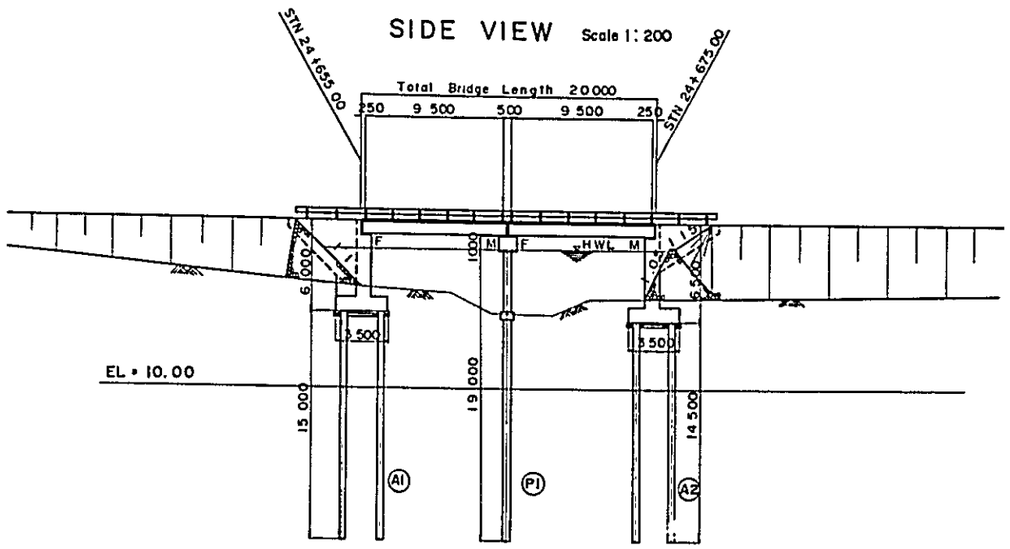

CROSS SECTION Scale 1:80
SEC. A-A SEC. B-B

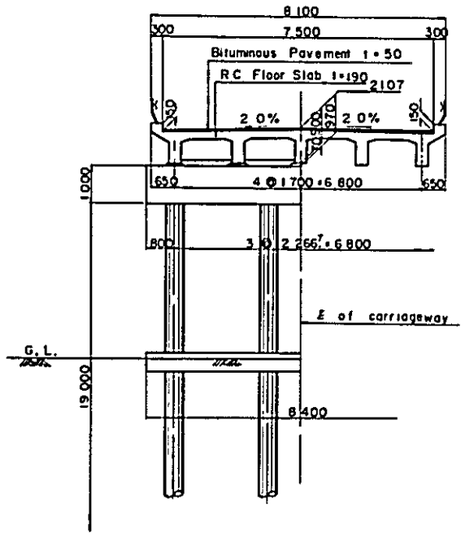

LONGITUDINAL SLOPE (No Scale)	VCL = 300, R = 5 000; STN 24+550.00 EL = 23.20; i = -3.000%; EL = 18.70; STN 24+700.00; STN 24+850.00 EL = 23.20; i = 3.000%
PROPOSED ROAD LEVEL	21.15 21.07 21.01
GROUND LEVEL	16.65 14.98 15.96
ACCUMULATIVE DISTANCE	24K 655.00 24K 665.00 24K 675.00
DISTANCE	0.00 10.00 10.00
STATION	A1 P1 A2
HORIZONTAL ALIGNMENT (No Scale)	STN 24+263.00; R = 6 000; STN 25+222.00

BASIC DESIGN CONDITION

HYDROLOGICAL DATA		90 m^3/s
TOTAL BRIDGE LENGTH		20 000
GIRDER LENGTH		9 960
SPAN LENGTH		9 500
BRIDGE WIDTH		7 500
LIVE LOAD		BS153 PART 3A HA
ROAD ALIGNMENT	VERTICAL	
	HORIZONTAL	R = 6 000
STRUCTURE	BRIDGE GIRDER	Cast-in-Place
	FLOOR SLAB	"
	SUBSTRUCTURE	"

PLAN Scale 1:200

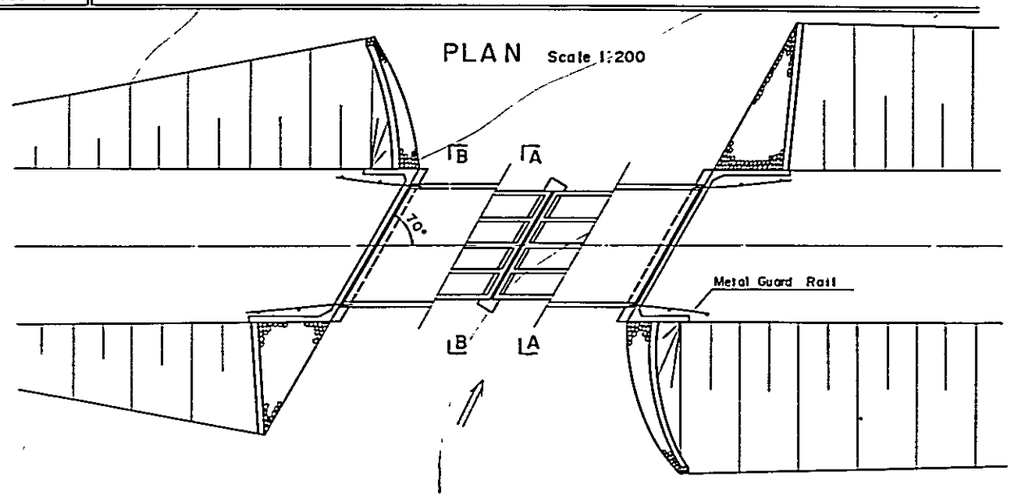

SOUTHERN COASTAL LINK ROAD STN 24 + 665.0 (Br. No 2) MINISTRY OF WORKS	NOTES	REVISIONS	ROADS DIVISION DIRECTOR OF ROADS ..... DATE ..... MW, DRG. No.		SCALES HORIZONTAL VERTICAL	DRG. No. DATE SHEET 250 OF 269

SIDE VIEW Scale 1:200

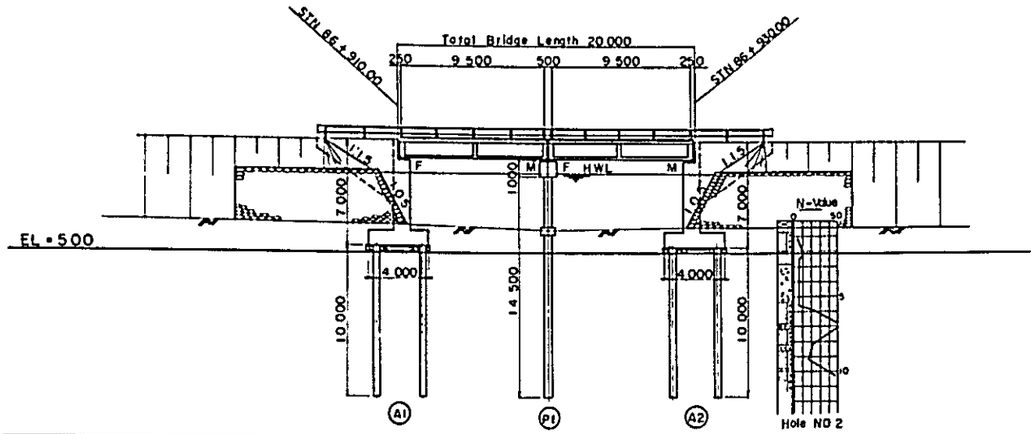

LONGITUDINAL SLOPE (No Scale)	STN 86+700.00 EL = 12.90; VCL = 400 R = 100.000; i = -0.200 %; VCL = 400 R = 80.000; STN 87+700.00 EL = 10.90
PROPOSED ROAD LEVEL	12.48 · 12.46 · 12.44
GROUND LEVEL	6.90 · 6.50 · 6.65
ACCUMULATIVE DISTANCE	86+910.000 · 86+920.000 · 86+930.000
DISTANCE	0.00 · 10.00 · 10.00
STATION	A1 · P1 · A2
HORIZONTAL ALIGNMENT (No Scale)	R = ∞; STN 81+821.00 — STN 87+762.00

PLAN Scale 1:200

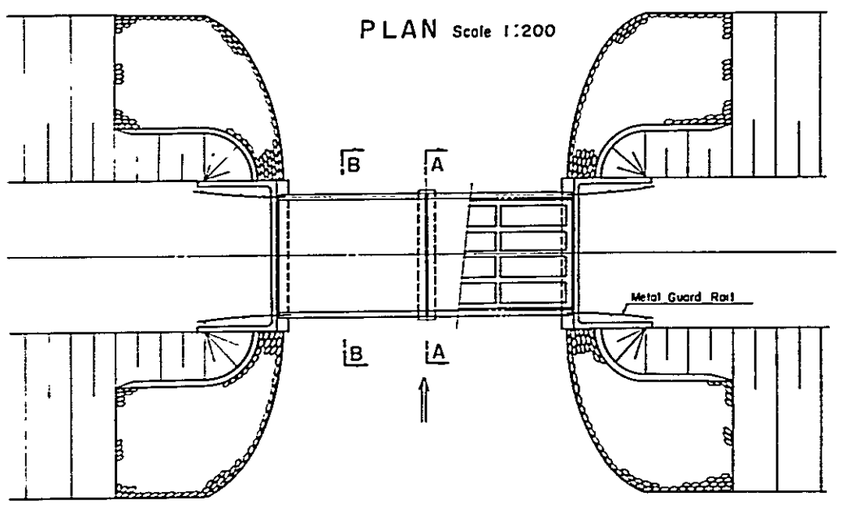

CROSS SECTION Scale 1:80

SEC. A-A SEC. B-B

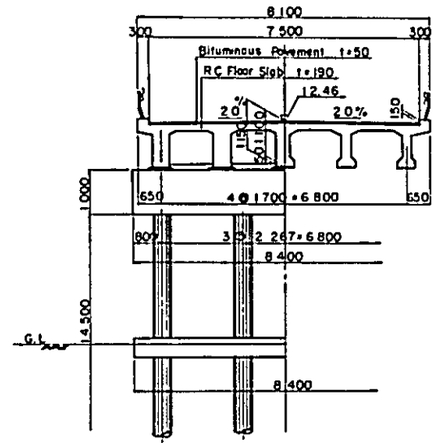

BASIC DESIGN CONDITION

HYDROLOGICAL DATA		179 m³/s
TOTAL BRIDGE LENGTH		20.000
GIRDER LENGTH		9.960
SPAN LENGTH		9.500
BRIDGE WIDTH		7.500
LIVE LOAD		BS153 PART3A HA
ROAD ALIGNMENT	VERTICAL	
	HORIZONTAL	R = ∞
STRUCTURE	BRIDGE GIRDER	Pre - Cast
	FLOOR SLAB	Cast-in - Place
	SUBSTRUCTURE	"

SOUTHERN COASTAL LINK ROAD STN. 86 + 920.0 (Br. No 9) MINISTRY OF WORKS	NOTES	REVISIONS	ROADS DIVISION DIRECTOR OF ROADS ..... DATE ..... MW, DRG. No.		SCALES HORIZONTAL VERTICAL	DRG. No. DATE SHEET 251 OF 269

SIDE VIEW Scale 1:200

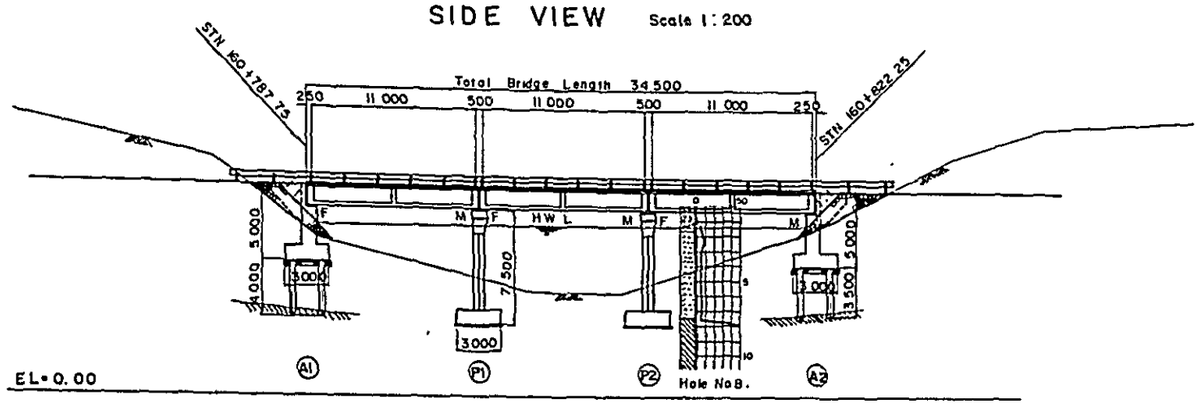

LONGITUDINAL SLOPE (No Scale)	STN 160+650.00 EL=18.60; VCL=300 R=2800; i=-6.000%; EL=9.60; i=+4.900%; STN 160+800.00; STN 160+950.00 EL=16.95
PROPOSED ROAD LEVEL	13.78 / 13.69 / 13.54 / 13.66
GROUND LEVEL	11.05 / 7.85 / 7.50 / 11.20
ACCUMULATIVE DISTANCE	160K 787.75 / 160K 799.25 / 160K 810.75 / 160K 822.25
DISTANCE	0.00 / 11.50 / 11.50 / 11.50
STATION	⑦ / ⑧ / ⑨ / ⑩
HORIZONTAL ALIGNMENT (No Scale)	R=600; STN 160+750.00; A=400; STN 161+20.00

CROSS SECTION Scale 1:80

SEC. A-A SEC. B-B

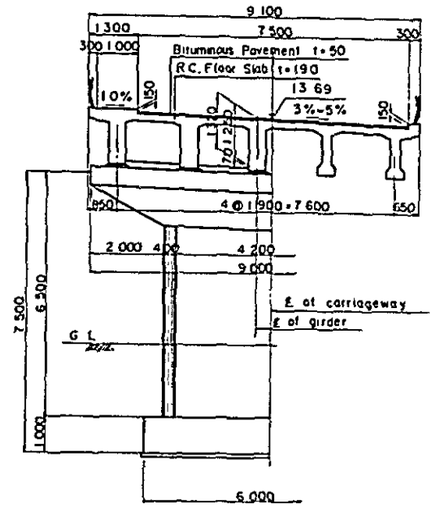

BASIC DESIGN CONDITION

HYDROLOGICAL DATA		554 m³/s
TOTAL BRIDGE LENGTH		34,500
GIRDER LENGTH		11,460
SPAN LENGTH		11,000
BRIDGE WIDTH		7,500 + 1,000
LIVE LOAD		BS 153 PART 3A HA
ROAD ALIGNMENT	VERTICAL	
	HORIZONTAL	R=600, A=400
STRUCTURE	BRIDGE GIRDER	Pre-Cast
	FLOOR SLAB	Cast-in-Place
	SUBSTRUCTURE	-

PLAN Scale 1:200

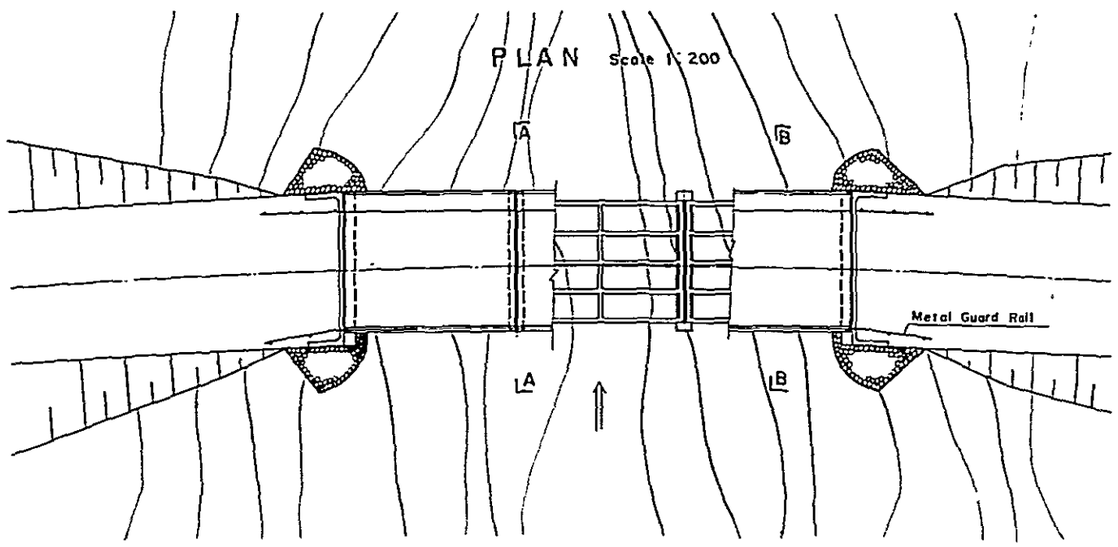

SOUTHERN COASTAL LINK ROAD STN.160+805.0 LINGAULA Rv. BRIDGE (Br. No.29) MINISTRY OF WORKS	NOTES	REVISIONS	ROADS DIVISION DIRECTOR OF ROADS ..... DATE ..... MW. DRG. No.		SCALES HORIZONTAL VERTICAL	DRG.No. DATE SHEET 252 OF 269

SIDE VIEW Scale 1:200

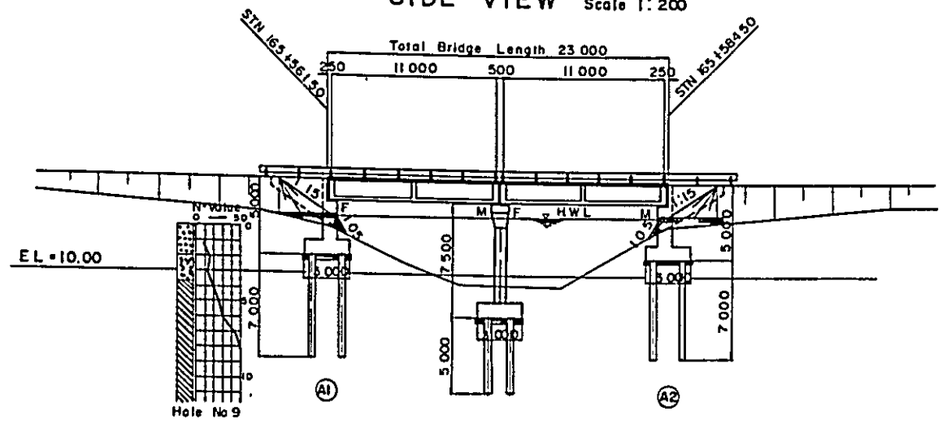

LONGITUDINAL SLOPE (No Scale)	STN 165+150.00 EL = 17.50; VCL = 300 R = 25 000; i = -0.300%	VCL = 300 R = 33 000; EL = 15.70; STN 165+750.00	
PROPOSED ROAD LEVEL	16.26	16.23	16.20
GROUND LEVEL	13.10	9.35	13.30
ACCUMULATIVE DISTANCE	165K 561.500	165K 573.000	165K 584.500
DISTANCE	0.00	11.50	11.50
STATION	A1	A2	A3
HORIZONTAL ALIGNMENT (No Scale)	A = 200	R = ∞	A = 200

STN 165+441.57 — STN.165+513.00 — STN.165+632.00

CROSS SECTION Scale 1:80

SEC. A-A SEC. B-B

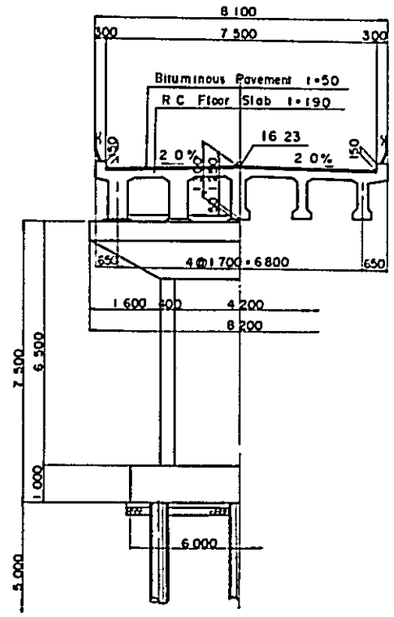

BASIC DESIGN CONDITION

HYDROLOGICAL DATA		265 m³/s
TOTAL BRIDGE LENGTH		23 000
GIRDER LENGTH		11 460
SPAN LENGTH		11 000
BRIDGE WIDTH		7 500
LIVE LOAD		BS 153 PART 3A HA
ROAD ALIGNMENT	VERTICAL	
	HORIZONTAL	R = ∞
STRUCTURE	BRIDGE GIRDER	Pre - Cast
	FLOOR SLAB	Cast - in - Place
	SUBSTRUCTURE	"

PLAN Scale 1:200

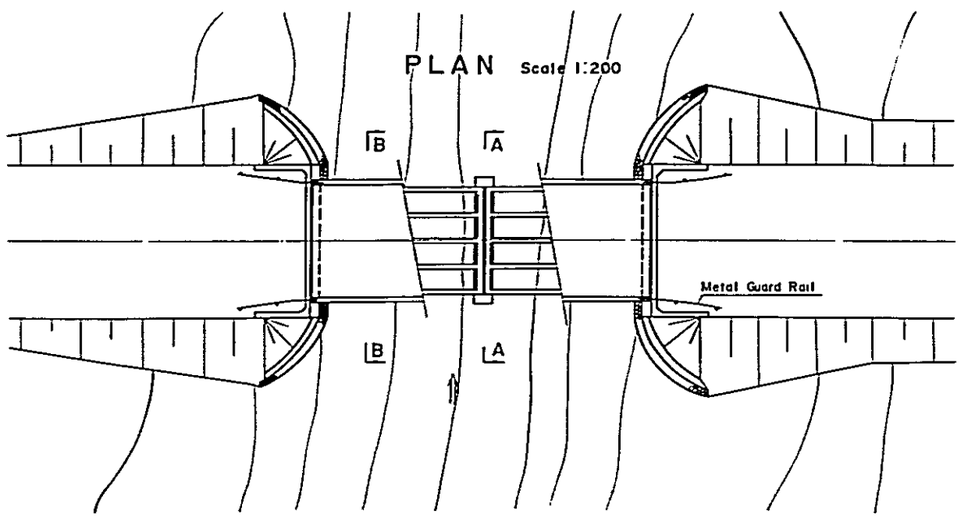

SOUTHERN COASTAL LINK ROAD STN. 165 + 5730 MBANGA Rv BRIDGE (Br. No 30) MINISTRY OF WORKS	NOTES	REVISIONS	ROADS DIVISION DIRECTOR OF ROADS ..... DATE ..... MW, DRG. No.		SCALES HORIZONTAL VERTICAL	DRG.No. DATE SHEET 253 OF 269

SIDE VIEW Scale 1:200

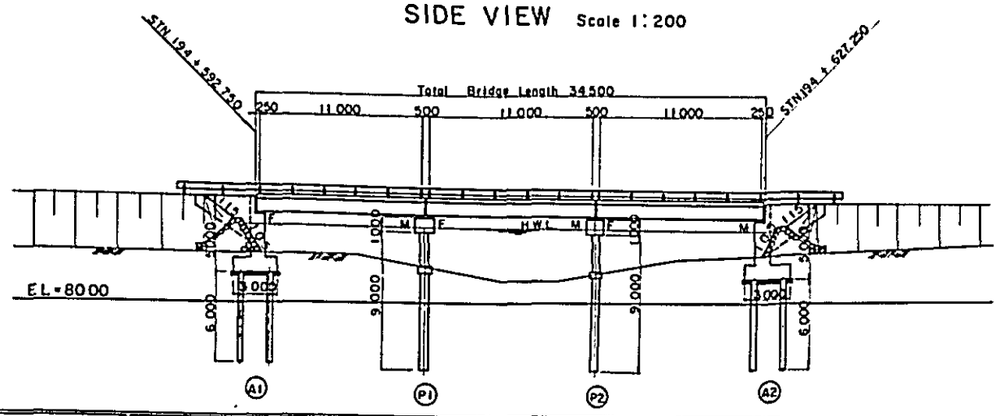

LONGITUDINAL SLOPE (No Scale)	STN 194+400.00 EL = 106.10; VCL = 200 R = 4500; i = -4.200%; VCL = 200 R = 6300; STN 194+800.00 EL = 69.30			
PROPOSED ROAD LEVEL	86.99	86.85	86.71	86.58
GROUND LEVEL	83.25	82.40	81.95	83.15
ACCUMULATIVE DISTANCE	194k 592.75	194k 604.25	194k 615.75	194k 627.25
DISTANCE	0.00	11.50	11.50	11.50
STATION	ⓐ	ⓐ	ⓐ	ⓐ
HORIZONTAL ALIGNMENT (NO Scale)	A = 500; R = 1200; A = 500; STN 194+408.33; STN 194+658.67			

CROSS SECTION Scale 1:80

SEC. A-A SEC. B-B

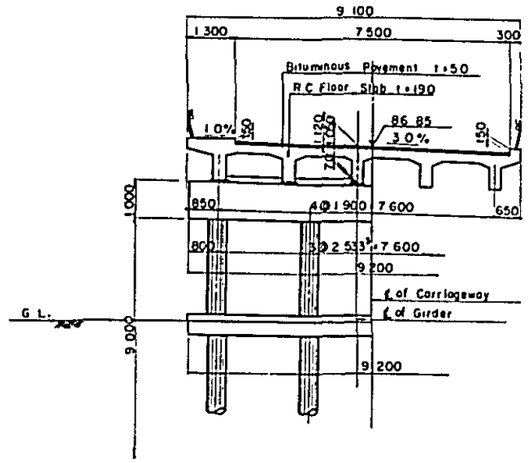

PLAN Scale 1:200

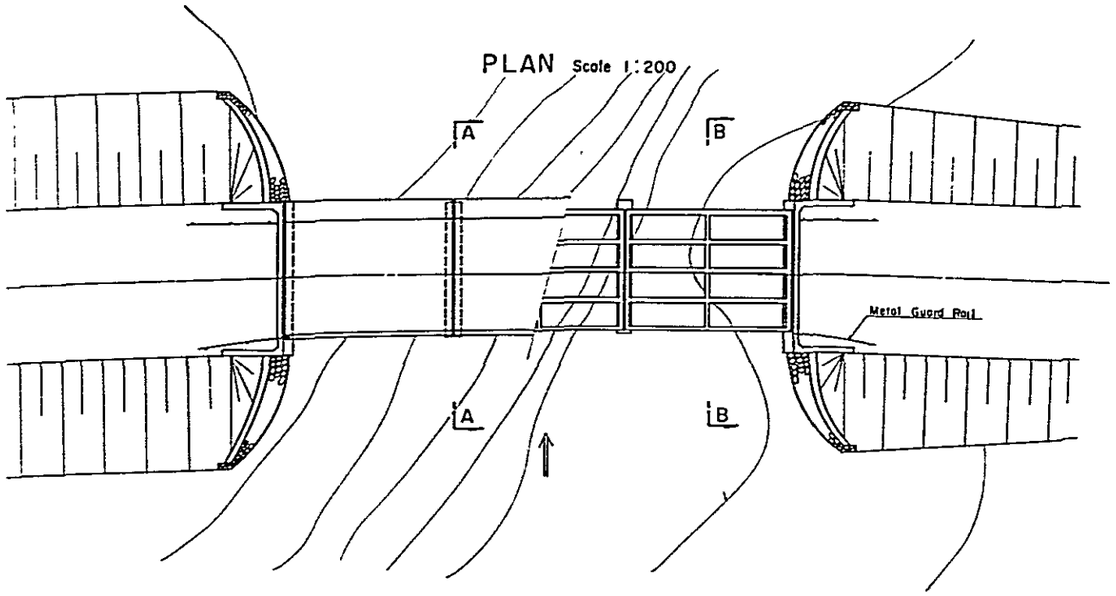

BASIC DESIGN CONDITION

HYDROLOGICAL DATA		347 m³/s
TOTAL BRIDGE LENGTH		34500
GIRDER LENGTH		11460
SPAN LENGTH		11000
BRIDGE WIDTH		7500 + 1000
LIVE LOAD		BS153 PART3A HA
ROAD ALIGNMENT	VERTICAL	
	HORIZONTAL	R = 1200
STRUCTURE	BRIDGE GIRDER	Cast - in - Place
	FLOOR SLAB	"
	SUBSTRUCTURE	"

SOUTHERN COASTAL LINK ROAD STN. 194 + 610.0 (Br. No. 36) MINISTRY OF WORKS	NOTES	REVISIONS	ROADS DIVISION DIRECTOR OF ROADS ..... DATE ..... MW, DRG. No.		SCALES HORIZONTAL VERTICAL	DRG. No. DATE SHEET 254 OF 269

SIDE VIEW Scale 1:200

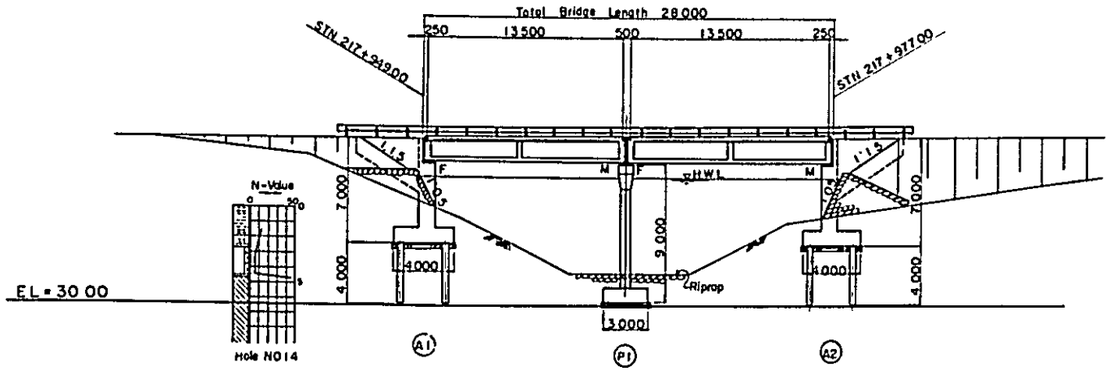

LONGITUDINAL SLOPE (No Scale)	VCL=300, R=2000; EL=35.40; STN.217+800.00 EL=47.40; L=-8.00%; STN.217+950.00; L=+7.00%; STN.218+100.00 EL=45.90
PROPOSED ROAD LEVEL	41.03 / 41.00 / 41.07
GROUND LEVEL	36.90 / 32.10 / 35.96
ACCUMULATIVE DISTANCE	217k 949.00 / 217k 963.00 / 217k 977.00
DISTANCE	0.00 / 14.00 / 14.00
STATION	A1 / P1 / A2
HORIZONTAL ALIGNMENT (No Scale)	A=500; R=1500; A=800; STN.217+288.67; STN.218+406.33

CROSS SECTION Scale 1:80

SEC. A–A SEC. B–B

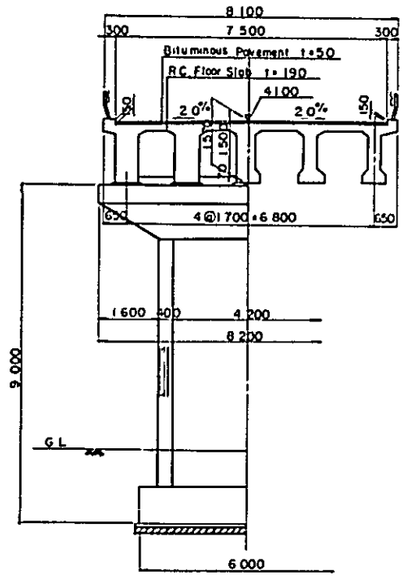

PLAN Scale 1:200

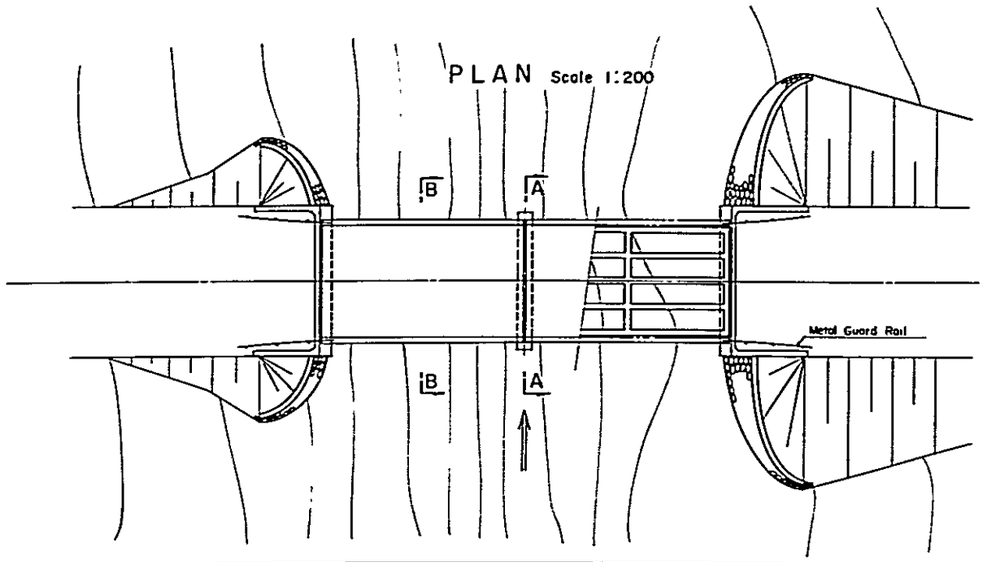

BASIC DESIGN CONDITION

HYDROLOGICAL DATA		495 m³/s
TOTAL BRIDGE LENGTH		28 000
GIRDER LENGTH		13 960
SPAN LENGTH		13 500
BRIDGE WIDTH		7 500
LIVE LOAD		BS153 PART3A HA
ROAD ALIGNMENT	VERTICAL	
	HORIZONTAL	R = 1 500
STRUCTURE	BRIDGE GIRDER	Pre-Cast
	FLOOR SLAB	Cast-In-Place
	SUBSTRUCTURE	"

SOUTHERN COASTAL LINK ROAD STN. 217 + 963.0 MANDAWA Rv. BRIDGE (Br.No.38) MINISTRY OF WORKS	NOTES	REVISIONS	ROADS DIVISION DIRECTOR OF ROADS ..... DATE ..... MW. DRG. No.		SCALES HORIZONTAL VERTICAL	DRG.No. DATE SHEET 255 OF 269

SIDE VIEW Scale 1:200

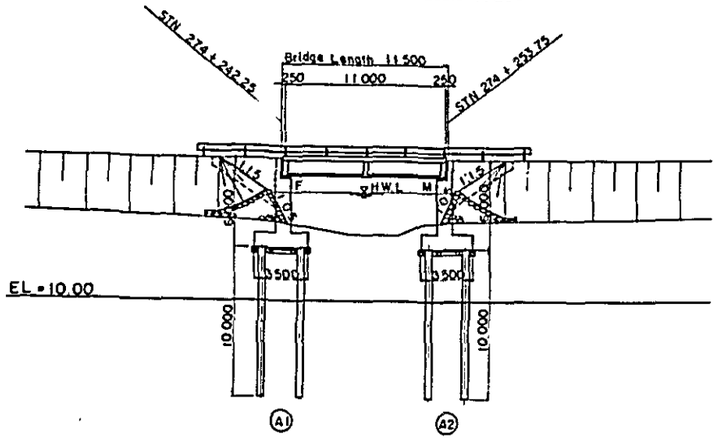

LONGITUDINAL SLOPE (No Scale)	STN 274+200.00 EL=20.00; VCL=300 R=30 000; i=-0.800%; VCL=300 R=6 000; EL=17.60; STN 274+500.00
PROPOSED ROAD LEVEL	19.47 19.42
GROUND LEVEL	15.40 15.40
ACCUMULATIVE DISTANCE	274k 242 250 274k 253 750
DISTANCE	0.00 11.50
STATION	A2 A2
HORIZONTAL ALIGNMENT (No Scale)	A=400; STN 274+80.000; STN 274+280.000

PLAN Scale 1:200

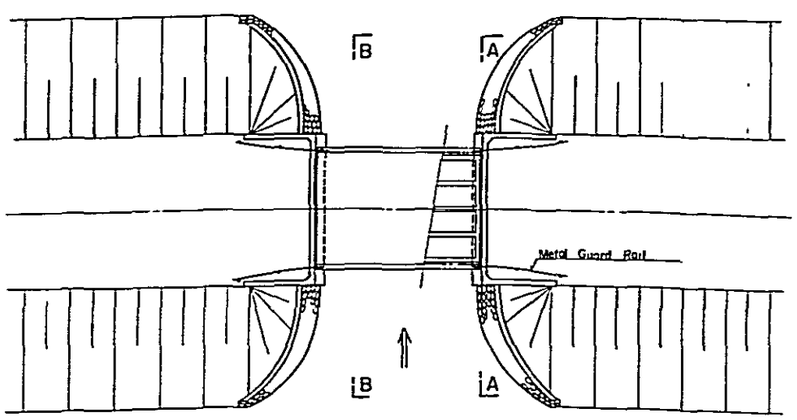

CROSS SECTION Scale 1:80

SEC A-A SEC. B-B

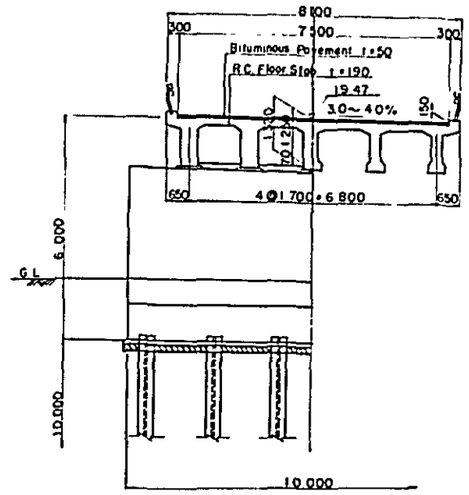

BASIC DESIGN CONDITION

HYDROLOGICAL DATA		88 m³/s
TOTAL BRIDGE LENGTH		11500
GIRDER LENGTH		11460
SPAN LENGTH		11000
BRIDGE WIDTH		7500
LIVE LOAD		BS153 PART3A HA
ROAD ALIGNMENT	VERTICAL	
	HORIZONTAL	R=800, A=400
STRUCTURE	BRIDGE GIRDER	Pre-Cast
	FLOOR SLAB	Cast-in-Place
	SUB STRUCTURE	"

SOUTHERN COASTAL LINK ROAD — STN. 274+248.0 (Br. No. 53) MINISTRY OF WORKS	NOTES	REVISIONS	ROADS DIVISION DIRECTOR OF ROADS ..... DATE ..... MW, DRG. No.		SCALES HORIZONTAL VERTICAL	DRG.No. DATE SHEET 256 OF 269

SIDE VIEW Scale 1:300

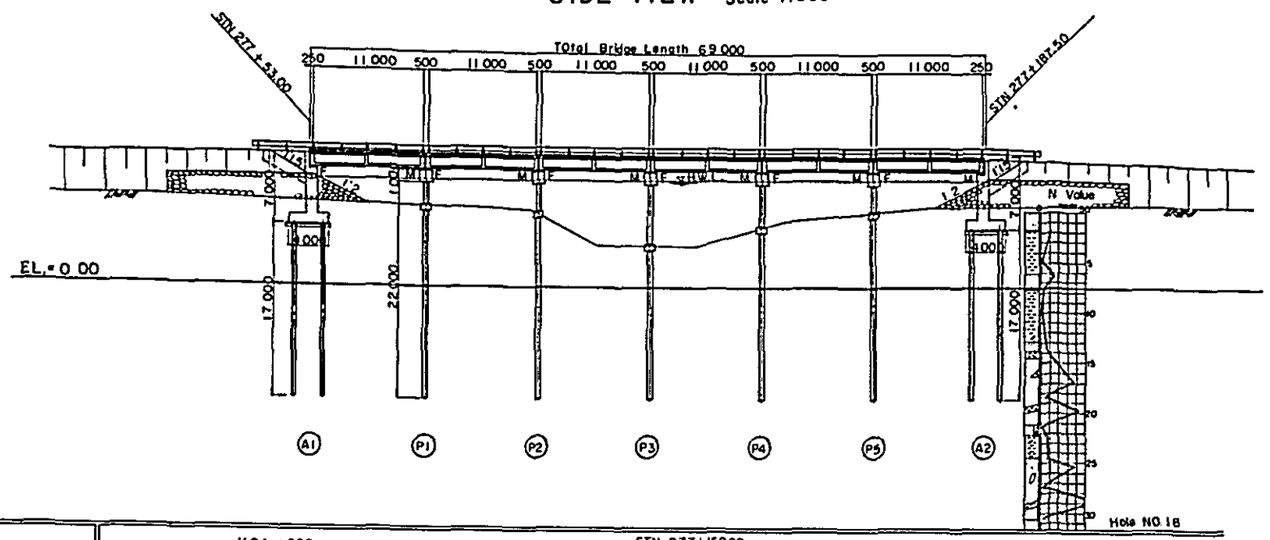

LONGITUDINAL SLOPE (No Scale)	VCL = 200, R = 18 000; STN 276+900.00, EL = 1090; i = 0.800 %; STN 277+150.00, EL = 12.90; VCL = 300, R = 14 000; i = -1.400 %; VCL = 200, R = 18 000; EL = 9.40; STN 277+400.00						
PROPOSED ROAD LEVEL	14.39	14.23	14.05	13.85	13.62	13.38	13.12
GROUND LEVEL	9.60	9.25	8.30	5.05	6.70	7.90	8.25
ACCUMULATIVE DISTANCE	277+11850	277+13000	277+14150	277+15300	277+16450	277+17600	277+18750
DISTANCE	0.00	11.50	11.50	11.50	11.50	11.50	11.50
STATION	A1	P1	P2	P3	P4	P5	A2
HORIZONTAL ALIGNMENT (No. Scale)	STN 277+53.00; A = 300; STN 277+165.50; R = 800						

CROSS SECTION Scale 1:80

SEC. A-A SEC. B-B

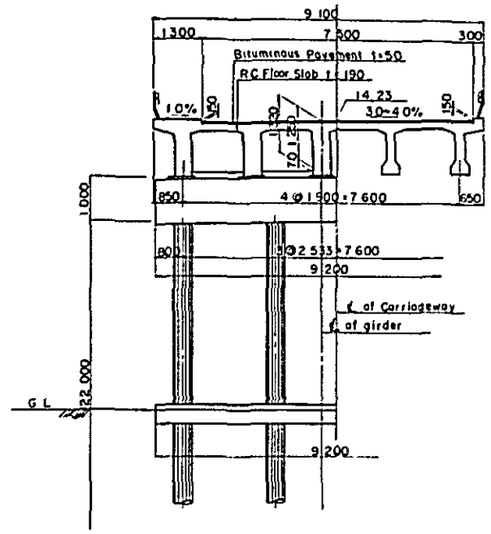

BASIC DESIGN CONDITION

HYDROLOGICAL DATA		719 m³/s
TOTAL BRIDGE LENGTH		69 000
GIRDER LENGTH		11 460
SPAN LENGTH		11 000
BRIDGE WIDTH		7 500 + 1 000
LIVE LOAD		BS153 PART3A HA
ROAD ALIGNMENT	VERTICAL	
	HORIZONTAL	A = 300, R = 800
STRUCTURE	BRIDGE GIRDER	Pre - Cast
	FLOOR SLAB	Cast-in - Place
	SUBSTRUCTURE	〃

PLAN Scale 1:300

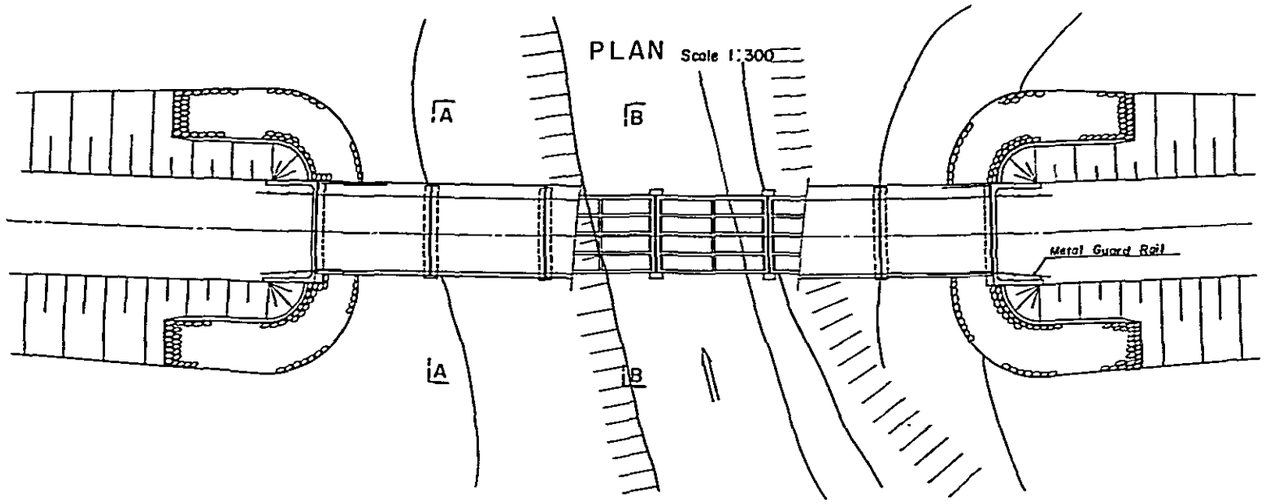

SOUTHERN COASTAL LINK ROAD — STN. 277 + 1530 NANGURU Rv. BRIDGE (Br. No. 54)	NOTES	REVISIONS	ROADS DIVISION DIRECTOR OF ROADS ..... DATE		SCALES HORIZONTAL VERTICAL	DRG. No.
MINISTRY OF WORKS			MW. DRG. No.			DATE
						SHEET 257 OF 269

SIDE VIEW Scale 1:200

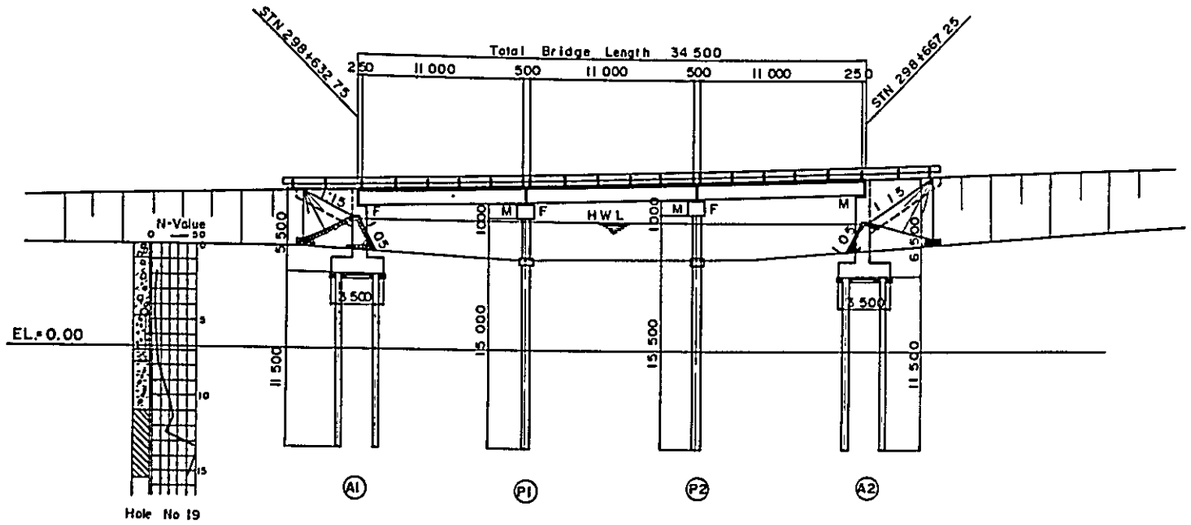

LONGITUDINAL SLOPE (No Scale)	I = 1.200 %	VCL = 400 R = 4 400 EL = 6.50	I = 7.800 %	
	STN 298+450.00 EL = 8.90	STN 298+650.00	STN 298+850.00 EL = 22.10	
PROPOSED ROAD LEVEL	10.46	10.81	11.19	11.60
GROUND LEVEL	6.65	5.95	6.05	6.70
ACCUMULATIVE DISTANCE	298K 632.75	298K 644.25	298K 655.75	298K 667.25
DISTANCE	0.00	11.50	11.50	11.50
STATION	A1	P1	P2	A2
HORIZONTAL ALIGNMENT (No Scale)	STN 298+557.00		STN 298+877.00	
	A = 300	R = 400	A = 300	

CROSS SECTION Scale 1:80

SEC. A-A SEC. B-B

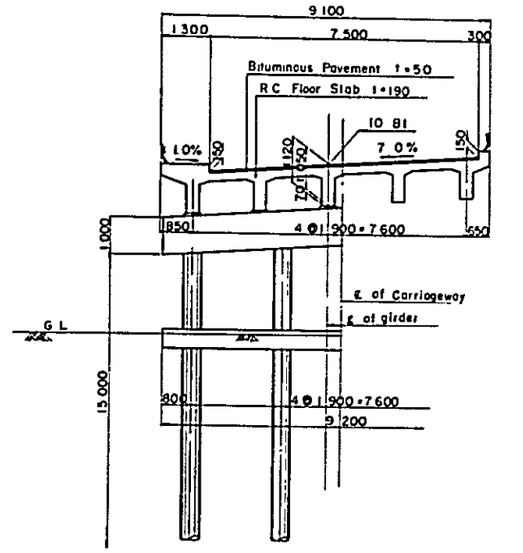

BASIC DESIGN CONDITION

HYDROLOGICAL DATA		296 m^3/s
TOTAL BRIDGE LENGTH		34 500
GIRDER LENGTH		11 460
SPAN LENGTH		11 000
BRIDGE WIDTH		7 500 + 1000
LIVE LOAD		BS153 PART 3A HA
ROAD ALIGNMENT	VERTICAL	
	HORIZONTAL	R = 400
STRUCTURE	BRIDGE GIRDER	Cast-in-Place
	FLOOR SLAB	-
	SUBSTRUCTURE	-

PLAN Scale 1:200

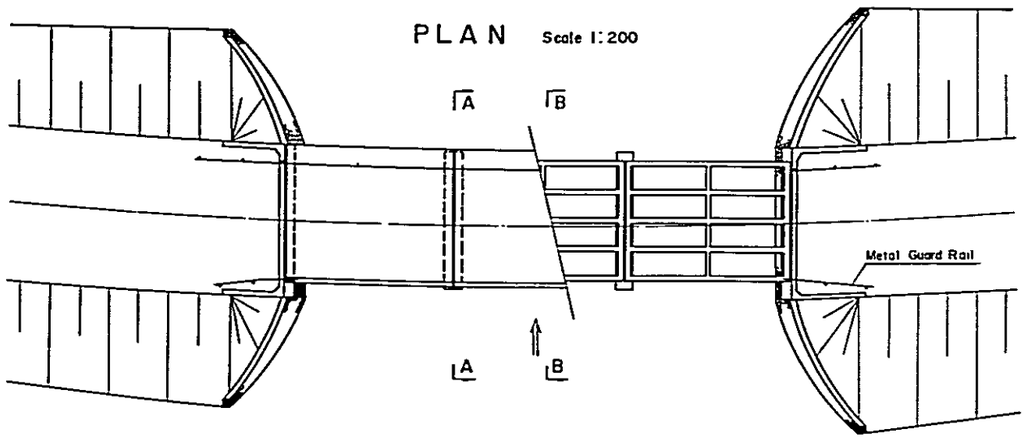

SOUTHERN COASTAL LINK ROAD STN. 298 + 650.0 MBANJA Rv. BRIDGE (Br. No. 59) MINISTRY OF WORKS	NOTES	REVISIONS	ROADS DIVISION DIRECTOR OF ROADS ..... DATE ..... MW, DRG. No.		SCALES HORIZONTAL VERTICAL	DRG. No. DATE SHEET 258 OF 269

SIDE VIEW Scale 1:200

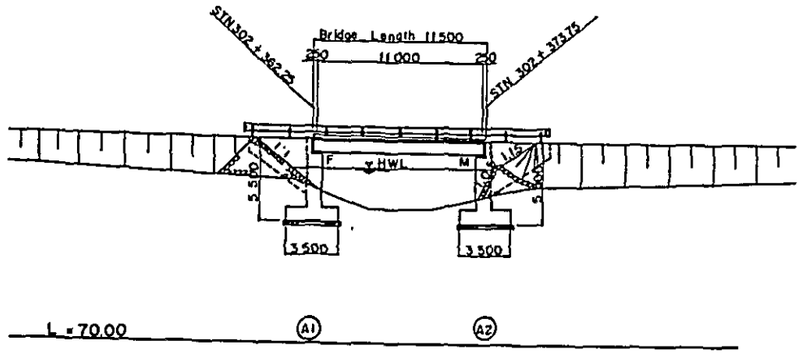

LONGITUDINAL SLOPE (No Scale)	i = -2.530 % — STN 302 + 25.000, EL = 85.85; EL = 82.05 — STN 302 + 400.00; i = 0.400 % — VCL = 300, R = 10 000 — STN 302 + 560.00, EL = 82.65
PROPOSED ROAD LEVEL	83.62 — 83.46
GROUND LEVEL	80.32 — 79.73
ACCUMULATIVE DISTANCE	302k 362.25 — 302k 373.75
DISTANCE	0.00 — 11.50
STATION	A1 — A2
HORIZONTAL ALIGNMENT (No Scale)	R = ∞ — STN 301 + 724.00 — STN 303 + 209.00

PLAN Scale 1:200

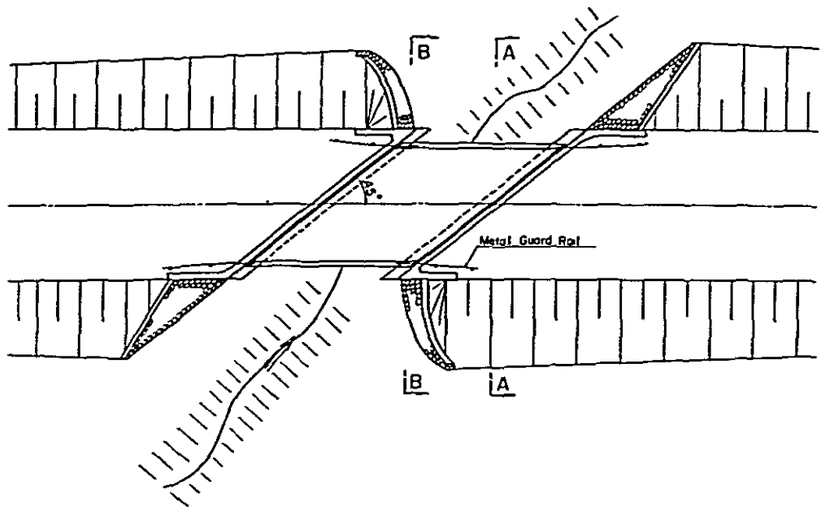

CROSS SECTION Scale 1:80

SEC. A – A | SEC. B – B

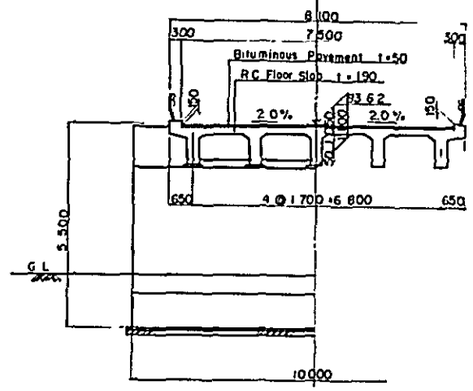

BASIC DESIGN CONDITION

HYDROLOGICAL DATA		$27 m^3/s$
TOTAL BRIDGE LENGTH		11 500
GIRDER LENGTH		11 460
SPAN LENGTH		11 000
BRIDGE WIDTH		7500
LIVE LOAD		BS153 PART3A HA
ROAD ALIGNMENT	VERTICAL	
	HORIZONTAL	R = ∞
STRUCTURE	BRIDGE GIRDER	Cast – In – Place
	FLOOR SLAB	"
	SUBSTRUCTURE	"

SOUTHERN COASTAL LINK ROAD STN. 302 + 368.0 (Br. No. 60) MINISTRY OF WORKS	NOTES	REVISIONS	ROADS DIVISION DIRECTOR OF ROADS ..... DATE ..... MW, DRG. No.		SCALES HORIZONTAL VERTICAL	DRG. No. DATE SHEET 259 OF 269

TYPE A

NO	STATION	SKEW ANGLE	OVER-BURDEN	MAIN BODY LENGTH ℓ_1	ℓ_2	ℓ_3	L	WING WIDTH w_1+w_3	w_2	W	WING HEIGHT
			(M)	(M)	(M)	(M)	(M)	(M)	(M)	(M)	(M)
1	102 + 250	0°	1.00	2.14	10.10	1.86	14.10	6.50	5.05	11.55	2.60
2	102 + 700	0°	1.00	"	"	"	"	"	"	"	"
3	139 + 725	30°	1.00	2.47	11.66	2.15	16.28	"	"	"	"
4	141 + 300	0°	1.00	2.14	10.10	1.86	14.10	"	"	"	"
5	187 + 365	15°	1.00	2.22	10.46	1.96	14.64	"	"	"	"
TOTAL							73.22				

MATERIAL LIST

CONCRETE VOLUME MAINBODY	WING	TOTAL	FORM AREA MAINBODY	WING	TOTAL	REINFORCEMENT WEIGHT MAINBODY	WING	TOTAL	LEVELING CONCRETE	COBBLE	JOINT FILLER	STONE MASONRY
(M3)	(M3)	(M3)	(M2)	(M2)	(M2)	(kg)	(kg)	(kg)	(M3)	(M3)	(M2)	(M2)
84.32	11.09	95.41	251.56	68.54	320.10	10.118	1.331	11.449	6.98	13.95	—	21.84
"	"	"	"	"	"	"	"	"	"	"	—	"
97.36	"	108.45	290.46	"	359.00	11.683	"	13.014	8.06	16.11	—	"
84.32	"	95.41	251.56	"	320.10	10.118	"	11.449	6.98	13.95	—	"
87.37	"	98.46	260.66	"	329.20	10.484	"	11.815	7.23	14.45	—	"
437.69	55.45	493.14	1.305.8	342.7	1.648.50	52.521	6.655	59.176	36.23	72.41	0	109.20

TYPE B

NO	STATION	SKEW ANGLE	OVER-BURDEN	MAIN BODY LENGTH ℓ_1	ℓ_2	ℓ_3	L	WING WIDTH w_1+w_3	w_2	W	WING HEIGHT
			(M)	(M)	(M)	(M)	(M)	(M)	(M)	(M)	(M)
6	65 + 800	0°	0.50	1.12	10.10	0.88	12.10	6.50	7.40	13.90	2.60
7	66 + 100	0°	0.50	"	"	"	"	"	"	"	"
8	67 + 10	0°	0.50	"	"	"	"	"	"	"	"
9	101 + 442	0°	0.50	"	"	"	"	"	"	"	"
10	141 + 200	30°	1.50	4.34	11.66	3.28	19.28	"	"	"	"
11	142 + 930	0°	1.00	2.14	10.10	1.86	14.10	"	"	"	"
12	185 + 950	0°	0.50	1.12		0.88	12.10	"	"	"	"
13	201 + 966	30°	4.00	9.54	11.66	8.94	30.14	"	7.50	14.00	"
14	202 + 32	30°	4.00	"	"	"	"	"	"	"	"
TOTAL							154.16				

MATERIAL LIST

CONCRETE VOLUME MAINBODY	WING	TOTAL	FORM AREA MAINBODY	WING	TOTAL	REINFORCEMENT WEIGHT MAINBODY	WING	TOTAL	LEVELING CONCRETE	COBBLE	JOINT FILLER	STONE MASONRY
(M3)	(M3)	(M3)	(M2)	(M2)	(M2)	(kg)	(kg)	(kg)	(M3)	(M3)	(M2)	(M2)
102.73	12.50	115.23	292.88	76.52	369.40	12.328	1.500	13.828	8.66	17.33	—	21.84
"	"	"	"	"	"	"	"	"	"	"	—	"
"	"	"	"	"	"	"	"	"	"	"	—	"
"	"	"	"	"	"	"	"	"	"	"	—	"
163.69	"	176.19	466.67	"	543.19	19.643	"	21.143	13.80	27.61	8.49	"
119.71	"	132.21	341.29	"	417.81	14.365	"	15.865	10.09	20.19	—	"
102.73	"	115.23	292.88	"	369.40	12.328	"	13.828	8.66	17.33	—	"
286.63	12.03	298.66	726.63	75.16	801.79	34.395	1.444	35.839	22.48	44.95	9.51	"
"	"	"	"	"	"	"	"	"	"	"	"	"
1.370.31	111.56	1.481.87	3.725.62	685.96	4.411.58	164.438	13.388	177.826	112.15	224.35	27.51	196.56

TYPE C

NO	STATION	SKEW ANGLE	OVER-BURDEN	MAIN BODY LENGTH ℓ_1	ℓ_2	ℓ_3	L	WING WIDTH w_1+w_3	w_2	W	WING HEIGHT
			(M)	(M)	(M)	(M)	(M)	(M)	(M)	(M)	(M)
15	102 + 869	15°	0.50	1.16	10.46	0.91	12.53	6.50	8.90	15.40	2.60
16	131 + 870	0°	1.00	2.14	10.10	1.86	14.10	"	"	"	"
17	143 + 250	30°	1.50	4.34	11.66	3.28	19.28	"	"	"	"
18	188 + 250	30°	1.00	2.47	"	2.15	16.28	"	"	"	"
19	200 + 76	15°	4.00	8.55	10.46	8.01	27.02	"	9.00	15.50	"
20	272 + 100	15°	1.00	2.22	"	1.93	14.64	"	8.90	15.40	"
21	278 + 550	0°	0.50	1.12	10.10	0.88	12.10	"	"	"	"
22	305 + 565	15°	3.50	7.50	10.46	7.00	24.96	"	9.00	15.50	"
23	4 + 597 (Ap)	0°	1.00	2.14	10.10	1.86	14.10	"	8.90	15.40	"
24	18 + 805 (Ap)	30°	2.50	6.00	11.66	5.54	23.20	"	"	"	"
TOTAL							178.21				

MATERIAL LIST

CONCRETE VOLUME MAINBODY	WING	TOTAL	FORM AREA MAINBODY	WING	TOTAL	REINFORCEMENT WEIGHT MAINBODY	WING	TOTAL	LEVELING CONCRETE	COBBLE	JOINT FILLER	STONE MASONRY
(M3)	(M3)	(M3)	(M2)	(M2)	(M2)	(kg)	(kg)	(kg)	(M3)	(M3)	(M2)	(M2)
120.41	13.39	133.80	324.40	81.62	406.02	14.449	1.609	16.056	10.74	21.49	—	21.84
135.50	"	148.89	365.05	"	446.67	16.260	"	17.867	12.08	24.18	—	"
185.28	"	198.67	499.16	"	580.78	22.233	"	23.840	16.52	33.06	9.61	"
156.45	"	169.84	421.49	"	503.11	18.774	"	20.381	13.95	27.92	—	"
291.55	12.82	304.37	694.90	78.33	773.23	34.996	1.538	36.524	24.07	48.15	10.79	"
140.40	13.39	153.79	378.25	81.62	459.87	16.848	1.607	18.455	12.52	25.05	—	"
116.28	"	129.67	313.27	"	394.89	13.953	"	15.560	10.37	20.75	—	"
269.32	12.82	282.14	641.92	78.33	720.25	32.319	1.538	33.857	22.24	44.48	10.79	"
135.50	13.39	148.89	365.05	81.62	446.67	16.260	1.607	17.867	12.08	24.18	—	"
222.95	"	236.34	600.65	"	682.27	26.754		28.361	19.88	39.79	9.61	"
1.773.64	132.76	1.906.40	4.604.14	809.62	5.413.76	212.836	15.932	228.768	154.45	309.05	40.80	218.40

TYPE D

NO	STATION	SKEW ANGLE	OVER-BURDEN	MAIN BODY LENGTH ℓ_1	ℓ_2	ℓ_3	L	WING WIDTH w_1+w_3	w_2	W	WING HEIGHT
			(M)	(M)	(M)	(M)	(M)	(M)	(M)	(M)	(M)
25	111 + 563	15°	0.50	1.16	10.46	0.91	12.53	7.20	10.40	17.60	3.10
26	113 + 150	15°	2.00	4.43	"	3.95	18.74	"	"	"	"
27	189 + 790	0°	0.50	1.12	10.10	0.88	12.10	"	"	"	"
28	233 + 480	0°	0.50	"	"	"	"	"	"	"	"
29	307 + 715	15°	1.50	3.89	10.46	2.94	17.29	"	"	"	"
30	310 + 50	0°	0.50	1.16	"	0.91	12.53	"	"	"	"
31	15 + 200 (Ap)	0°	0.50	"	"	"	"	"	"	"	"
TOTAL							97.82				
GRAND TOTAL											

MATERIAL LIST

CONCRETE VOLUME MAINBODY	WING	TOTAL	FORM AREA MAINBODY	WING	TOTAL	REINFORCEMENT WEIGHT MAINBODY	WING	TOTAL	LEVELING CONCRETE	COBBLE	JOINT FILLER	STONE MASONRY
(M3)	(M3)	(M3)	(M2)	(M2)	(M2)	(kg)	(kg)	(kg)	(M3)	(M3)	(M2)	(M2)
143.34	16.47	159.81	395.66	99.60	495.26	17.201	1.976	19.177	12.51	25.03	—	31.20
208.66	"	225.13	591.75	"	691.35	25.040	"	27.016	18.71	37.43	—	"
138.42	"	154.89	382.08	"	481.68	15.611	"	18.587	12.08	24.17	—	"
"	"	"	"	"	"	"	"	"	"	"	—	"
197.79	"	214.26	545.96	"	645.56	23.735	"	25.711	17.26	34.54	—	"
138.42	"	154.89	382.08	"	481.68	16.611	"	18.587	12.08	24.17	—	"
"	"	"	"	"	"	"	"	"	"	"	—	"
1.103.47	115.29	1.218.76	3.061.69	697.2	3.758.89	132.420	13.832	146.252	96.80	193.68	0	218.40
4.685.11	415.06	5.100.17	12.697.25	2.535.48	15.232.73	562.215	49.807	612.022	399.63	799.49	68.31	742.56

TYPE A

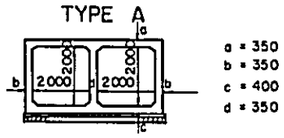

a = 350
b = 350
c = 400
d = 350

TYPE B

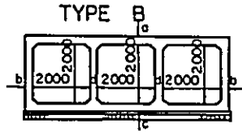

a = 350 (400)
b = 350 (400)
c = 400 (450)
d = 350 (350)

TYPE C

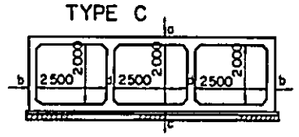

a = 350 (400)
b = 350 (400)
c = 400 (450)
d = 350 (350)

TYPE D

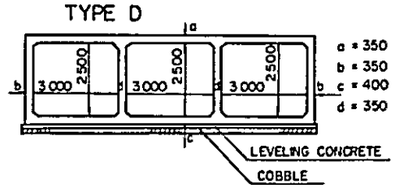

a = 350
b = 350
c = 400
d = 350

PROFILE

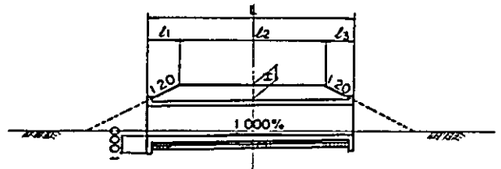

PLAN

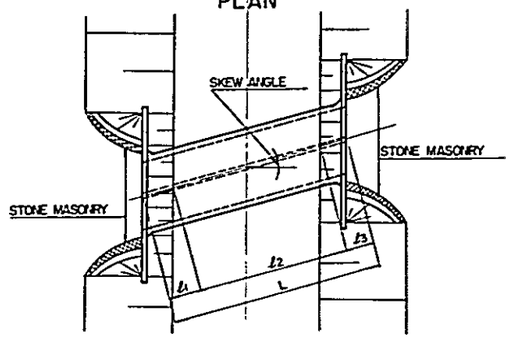

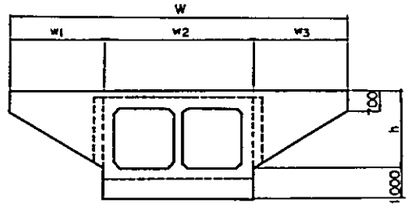

SOUTHERN COASTAL LINK ROAD MATERIAL LIST OF BOX CULVERT MINISTRY OF WORKS	NOTES	REVISIONS	ROADS DIVISION DIRECTOR OF ROADS ..... DATE ..... MW, DRG. No.	SCALES	DRG.No. DATE SHEET 260 OF 269

TYPE A

PROFILE Scale 1:100

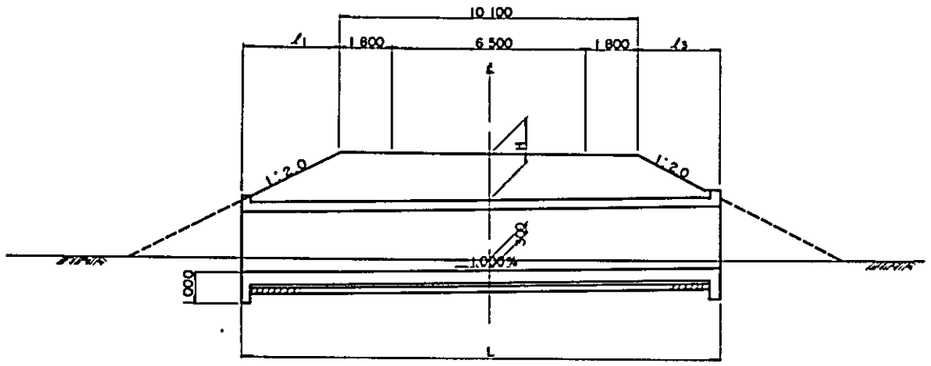

FRONT OF WING (LEFT&RIGHT) Scale 1:50

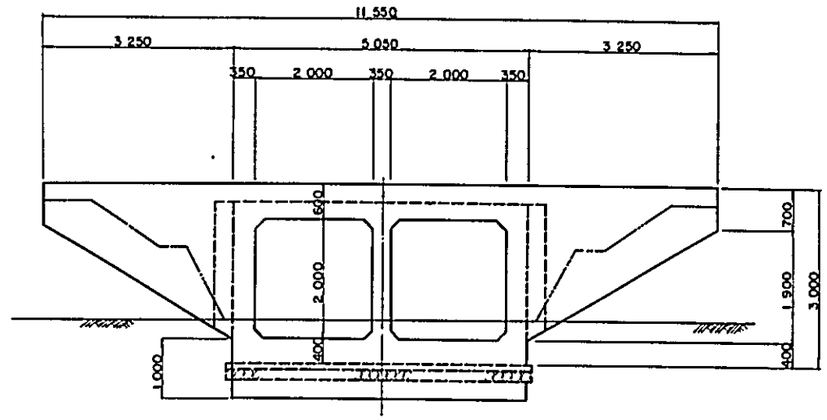

PLAN Scale 1:100

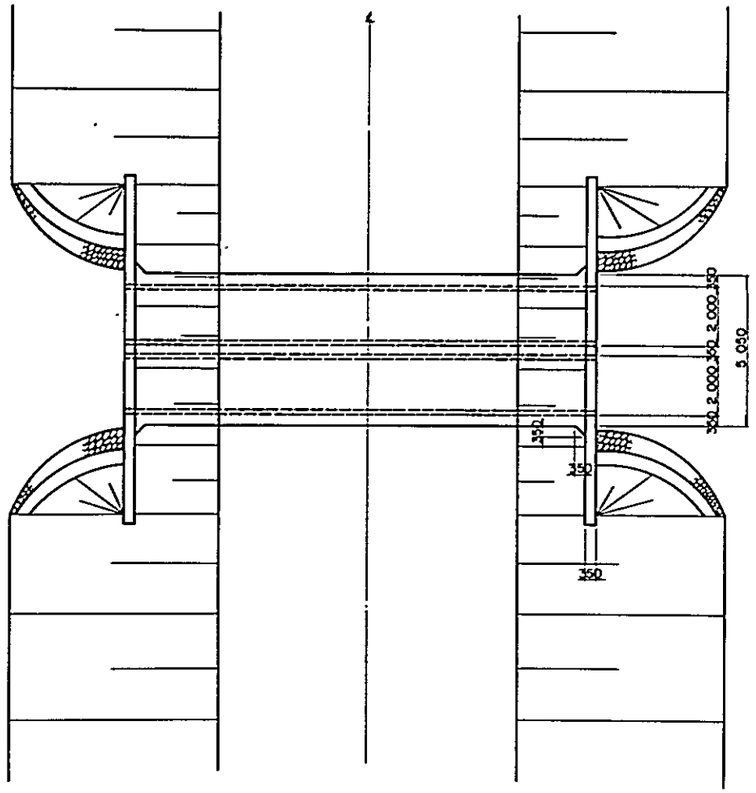

TYPICAL CROSS SECTION Scale 1.50

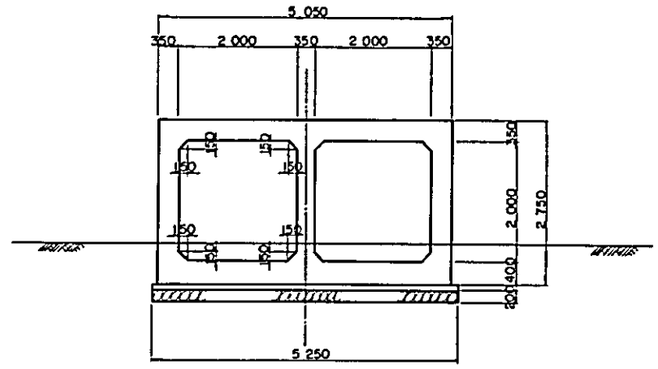

LIST OF BOX CULVERT LENGTH

SKEW ANGLE / H	ℓ_1			ℓ_3			L		
	0°	15°	30°	0°	15°	30°	0°	15°	30°
0.50	1.12	1.16	1.29	0.88	0.91	1.02	12.10	12.53	13.97
1.00	2.14	2.22	2.47	1.86	1.93	2.15	14.10	14.61	16.28
1.50	3.76	3.89	4.34	2.84	2.94	3.28	16.10	17.29	19.28
2.00	4.18	4.33	4.83	3.82	3.95	4.41	18.10	18.74	20.90
2.50	5.20	5.38	6.00	4.80	4.97	5.54	20.10	20.81	23.20
3.00	6.22	6.44	7.18	5.78	5.98	6.67	22.10	22.88	25.51
3.50	7.24	7.50	8.36	6.76	7.00	7.81	24.10	24.96	27.83
4.00	8.26	8.55	9.54	7.74	8.01	8.94	26.10	27.02	30.14
4.50	9.28	9.61	10.72	8.72	9.03	10.07	28.10	29.10	32.45

SOUTHERN COASTAL LINK ROAD BOX CULERT TYPE A MINISTRY OF WORKS	NOTES	REVISIONS	ROADS DIVISION DIRECTOR OF ROADS ..... DATE ..... MW, DRG. No.		SCALES	DRG.No. DATE SHEET 261 OF 269

TYPE B

PROFILE Scale 1:100

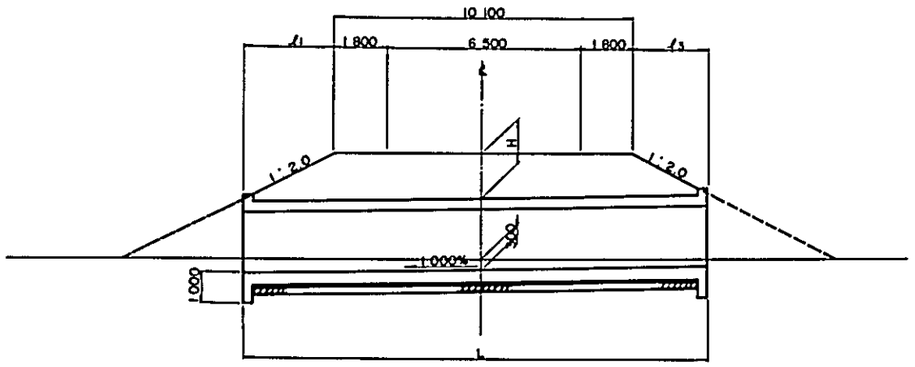

FRONT OF WING (LEFT & RIGHT) Scale 1:100

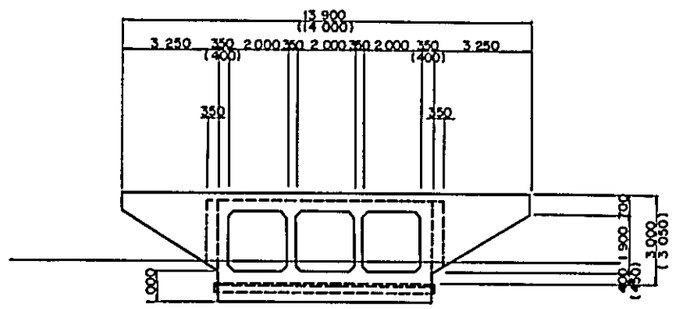

PLAN Scale 1:100

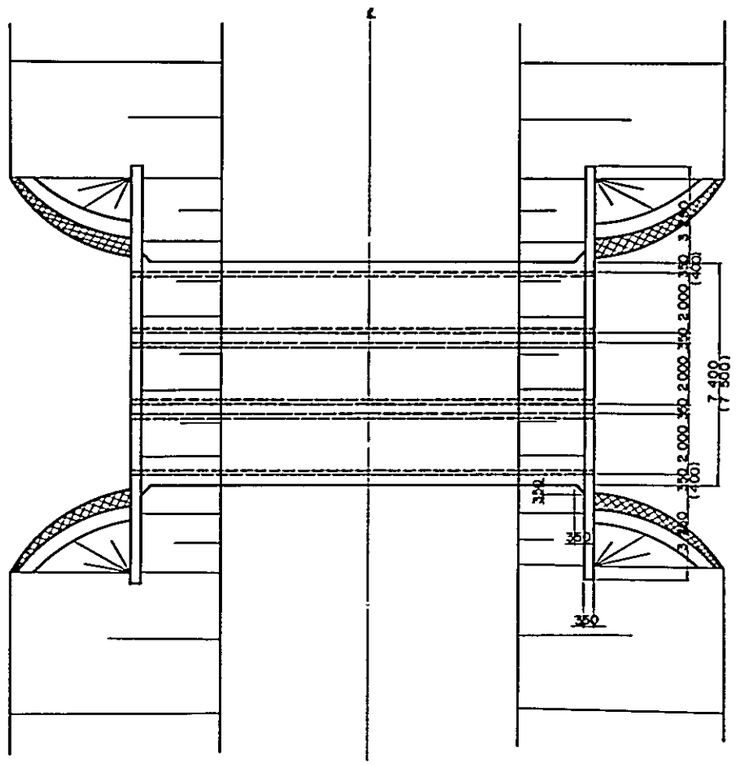

TYPICAL CROSS SECTION Scale 1:100

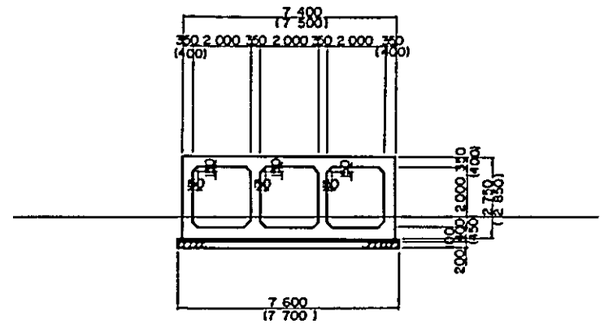

LIST OF BOX CULVERT LENGTH

SKEW ANGLE / H	ℓ_1			ℓ_3			L		
	0°	15°	30°	0°	15°	30°	0°	15°	30°
0.50	1.12	1.16	1.29	0.88	0.91	1.02	12.12	12.53	13.97
1.00	2.14	2.22	2.47	1.86	1.93	2.15	14.10	14.61	16.28
1.50	3.76	3.89	4.34	2.84	2.94	3.28	16.10	17.29	19.28
2.00	4.18	4.33	4.83	3.82	3.95	4.41	18.10	18.74	20.90
2.50	5.20	5.38	6.00	4.80	4.97	5.54	20.10	20.81	23.20
3.00	6.22	6.44	7.18	5.78	5.98	6.67	22.10	22.88	25.51
3.50	7.24	7.50	8.36	6.76	7.00	7.81	24.10	24.96	27.83
4.00	8.26	8.55	9.54	7.74	8.01	8.94	26.10	27.02	30.14
4.50	9.28	9.61	10.72	8.72	9.03	10.07	28.10	29.10	32.45

SOUTHERN COASTAL LINK ROAD BOX CULVERT TYPE B MINISTRY OF WORKS	NOTES	REVISIONS	ROADS DIVISION DIRECTOR OF ROADS ..... DATE ..... MW, DRG. No.		SCALES
DRG. No. DATE SHEET 262 OF 269					

TYPE C

PROFILE Scale 1:100

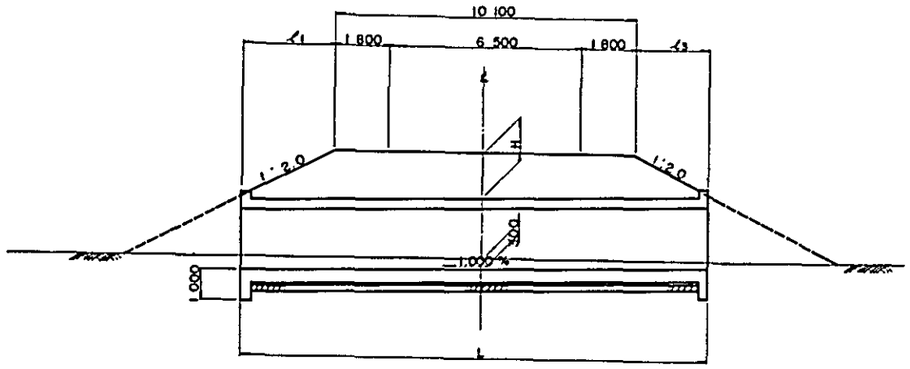

FRONT OF WING Scale 1:100 (LEF & RIGHT)

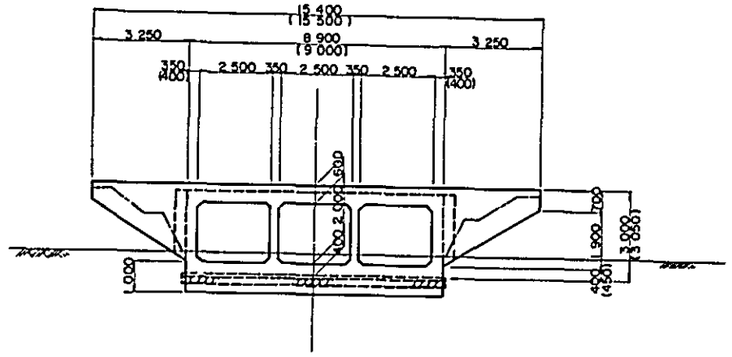

PLAN Scale 1:100

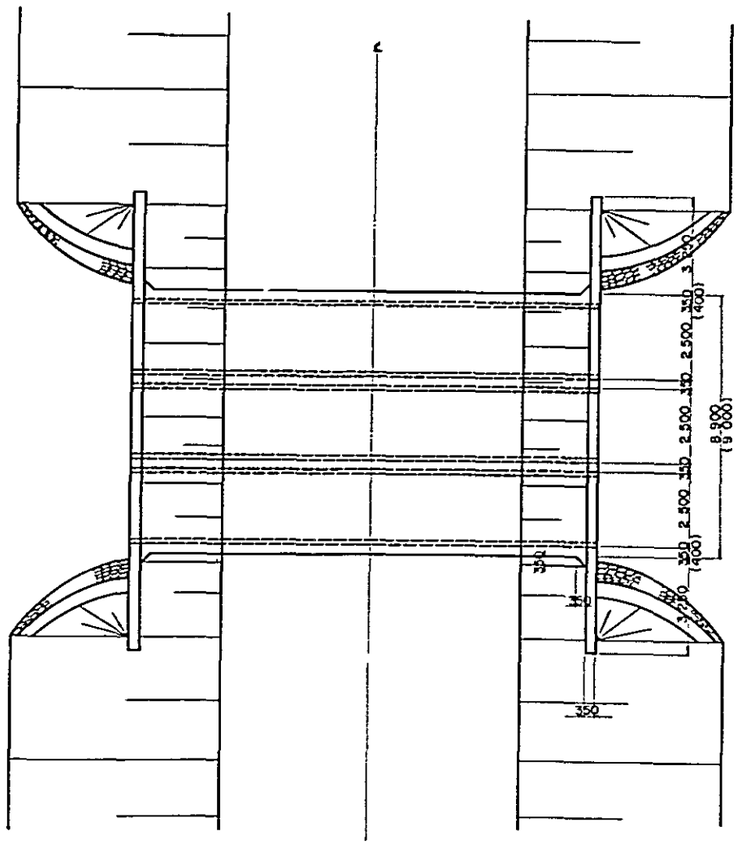

TYPICAL CROSS SECTION Scale 1:100

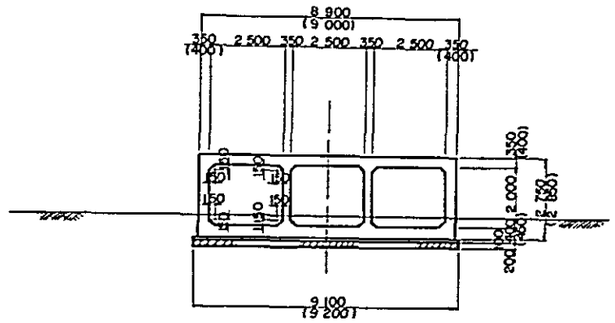

LIST OF BOX CULVERT LENGTH

SKEW ANGLE / H	ℓ_1			ℓ_3			L		
	0°	15°	30°	0°	15°	30°	0°	15°	30°
0.50	1.12	1.16	1.29	0.88	0.91	1.02	12.10	12.53	13.97
1.00	2.14	2.22	2.47	1.86	1.93	2.15	14.10	14.61	16.28
1.50	3.76	3.89	4.34	2.84	2.94	3.28	16.10	17.29	19.28
2.00	4.18	4.33	4.83	3.82	3.95	4.41	18.10	18.74	20.90
2.50	5.20	5.38	6.00	4.80	4.97	5.54	20.10	20.81	23.20
3.00	6.22	6.44	7.18	5.78	5.98	6.67	22.10	22.88	25.51
3.50	7.24	7.50	8.36	6.76	7.00	7.81	24.10	24.96	27.83
4.00	8.26	8.55	9.54	7.74	8.01	8.94	26.10	27.02	30.14
4.50	9.28	9.61	10.72	8.72	9.03	10.07	28.10	29.10	32.45

SOUTHERN COASTAL LINK ROAD BOX CULVERT TYPE C MINISTRY OF WORKS	NOTES	REVISIONS	ROADS DIVISION DIRECTOR OF ROADS ..... DATE ..... MW, DRG. No.		SCALES	DRG.No. DATE SHEET 263 OF 269

TYPE D

PROFILE Scale 1:100

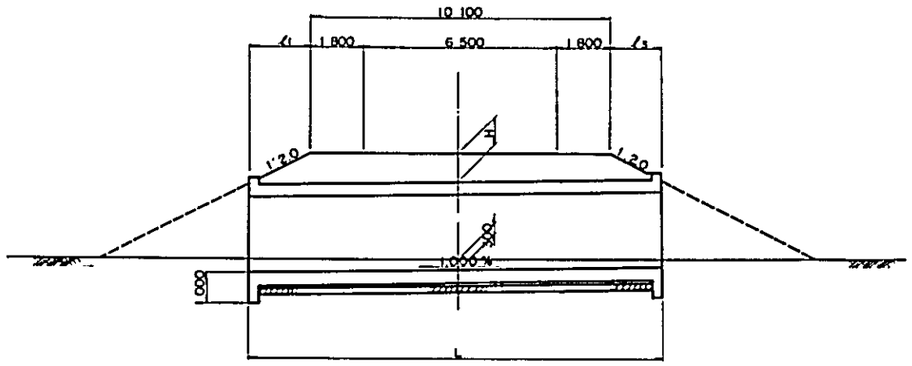

FRONT OF WING (LEFT & RIGHT) Scale 1:100

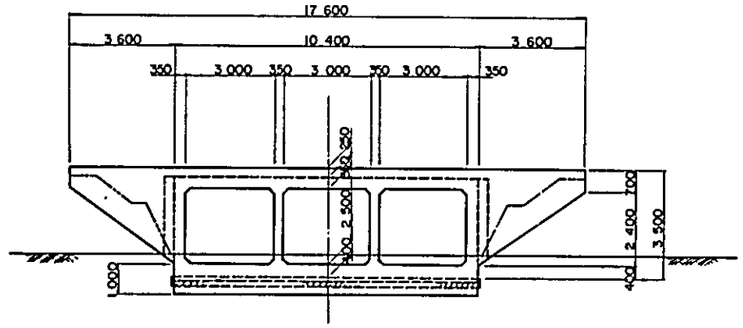

PLAN Scale 1:100

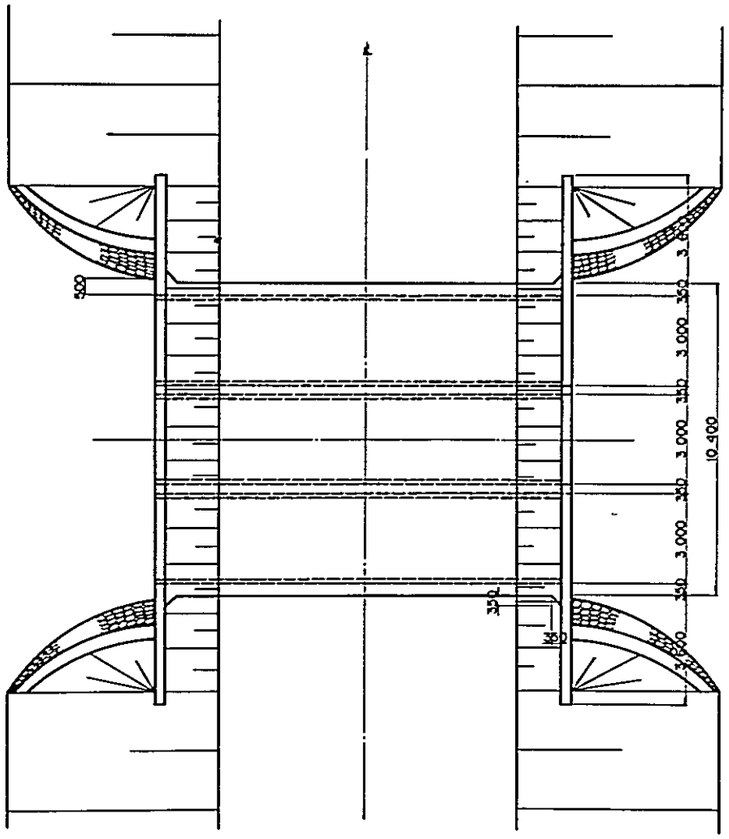

TYPICAL CROSS SECTION Scale 1:100

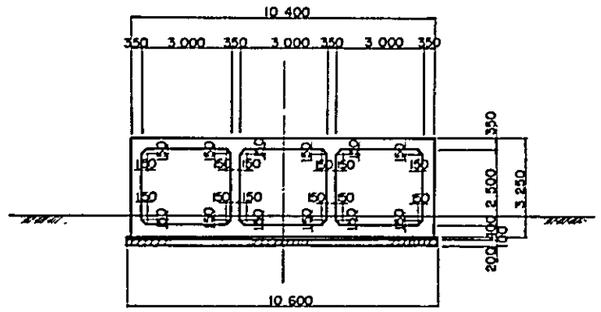

LIST OF BOX CULVERT LENGTH

H \ SKEW ANGLE	l_1			l_3			L		
	0°	15°	30°	0°	15°	30°	0°	15°	30°
0 50	1 12	1.16	1 29	0 88	0.91	1 02	12.10	12.53	13 97
1.00	2.14	2.22	2.47	1 86	1 93	2 15	14 10	14 61	16.28
1.50	3 76	3 89	4 34	2 84	2.94	3 28	16 10	17 29	19 28
2.00	4 18	4 33	4.83	3 82	3 95	4 41	18 10	18 74	20 90
2 50	5 20	5 38	6 00	4 80	4 97	5 54	20.10	20 81	23 20
3 00	6 22	6 44	7 18	5 78	5 98	6 67	22.10	22.88	25 51

SOUTHERN COASTAL LINK ROAD BOX CULVERT TYPE D MINISTRY OF WORKS	NOTES	REVISIONS	ROADS DIVISION DIRECTOR OF ROADS ..... DATE ..... MW, DRG. No.		SCALES

DRG. No.
DATE
SHEET 264 OF 269

MATERIAL LIST OF CORRUGATED METAL PIPES (I)

TYPE A (ø 600)

SECTION	NO	STATION	OVER-BURDEN (m)	SKEW ANGLE	LENGTH (m)
SECTION 1	1	0 + 100	0 60	0°	14 90
	2	" + 900	0 60	0°	14 90
	3	4 + 750	1 10	0°	16 90
	4	5 + 100	5.10	0°	32 90
	5	12 + 700	0.60	0°	14 90
	6	19 + 10	0.60	0°	14 90
	7	47 + 250	1.10	0°	16 90
	TOTAL		(7 NOS.		126 30 m
SECTION 2	8	48 + 600	1 10	0°	16 90
	9	" + 900	1.10	0°	16 90
	10	83 + 550	1.10	0°	16 90
	11	84 + 950	1.60	0°	18 90
	12	91 + 50	1.10	0°	16 90
	13	112 + 200	1 60	0°	18 90
	14	125 + 730	1 10	0°	16 90
	15	131 + 200	2 60	0°	22 90
	16	134 + 50	0 60	0°	14 90
	17	140 + 650	2 10	0°	20 90
	18	141 + 515	5 10	0°	32 90
	19	147 + 700	0 60	0°	14 90
	TOTAL		(12 NOS)		228 80 m
SECTION 3	20	149 + 350	2 10	0°	20 90
	21	150 + 450	1.10	0°	16 90
	22	151 + 400	1.10	0°	16 90
	23	" + 800	1 10	0°	16 90
	24	156 + 490	1 60	0°	18 90
	25	170 + 450	1 10	0°	16 90
	26	175 + 750	1.60	0°	18 90
	27	178 + 450	1 10	0°	16 90
	28	187 + 900	1.60	0°	18 90
	29	191 + 650	2 10	0°	20 90
	30	192 + 435	2.10	0°	20 90
	31	193 + 50	0.60	0°	14.90
	32	" + 350	0 60	0°	14 90
	33	195 + 700	1.60	0°	18 90
	34	196 + 550	2 10	0°	20 90
	35	197 + 10	0 60	0°	14 90
	36	199 + 800	1 10	0°	16.90
	37	200 + 475	2 60	0°	22 90
	38	" + 724	3 10	15°	25 79
	39	202 + 780	3 10	0°	24 90
	40	205 + 400	2.10	0°	20 90
	41	206 + 50	1 60	0°	18 90
	42	209 + 200	1.10	0°	16 90
	43	210 + 800	0 60	0°	14 90
	44	211 + 215	2 60	0°	22 90
	45	214 + 775	5 60	0°	34 90
	46	215 + 117	6 60	0°	38 90
	47	" + 590	2.10	0°	20 90
	48	216 + 350	2 10	0°	20 90
	49	219 + 50	0 60	0°	14 90
	50	" + 400	0 60	0°	14 90
	51	220 + 510	2 10	0°	20 90
	52	221 + 450	1.10	0°	16.90
	53	" + 937	1.60	0°	18 90
	54	222 + 200	0 60	0°	14 90
	55	223 + 150	3 10	0°	24 90

SECTION	NO	STATION	OVER-BURDEN (m)	SKEW ANGLE	LENGTH (m)
SECTION 3	56	223 + 350	2 60	30°	26 45
	57	" + 783	2 60	30°	26.45
	58	224 + 950	0 60	30°	17 21
	59	230 + 150	1 10	0°	16 90
	TOTAL		(40 NOS)		802 30 m
SECTION 4	60	236 + 425	4 60	0°	30 90
	61	241 + 180	5 10	0°	32 90
	62	" + 800	1 10	0°	16 90
	63	244 + 800	9 60	0°	50 90
	64	" + 960	3 60	0°	26.90
	65	246 + 930	3 60	0°	26.90
	66	252 + 150	1 10	0°	16 90
	67	253 + 250	4 60	30°	35 70
	68	254 + 200	1 60	0°	18 90
	69	" + 750	2 60	0°	22 90
	70	255 + 900	1 10	0°	16 90
	71	257 + 450	1 10	0°	16 90
	72	" + 850	0 60	0°	14.90
	73	258 + 300	0 60	0°	14.90
	74	" + 900	0 60	0°	14.90
	75	261 + 200	0 60	0°	14 90
	76	262 + 450	1 10	0°	16 90
	77	265 + 490	2 10	0°	20 90
	78	266 + 600	2 60	0°	22 90
	79	274 + 510	2 60	0°	22 90
	80	" + 700	1 10	0°	16 90
	81	" + 980	2 60	0°	22 90
	82	275 + 200	2 10	0°	20 90
	83	279 + 50	0 60	0°	14 90
	84	" + 800	1 10	0°	16 90
	85	280 + 600	1 10	0°	16 90
	86	283 + 700	0 60	0°	14 90
	87	284 + 600	1 60	0°	18 90
	88	286 + 300	0 60	0°	14 90
	89	287 + 10	1.10	0°	16.90
	90	" + 450	0 60	0°	14 90
	91	" + 750	0 60	15°	15.43
	92	288 + 300	0 60	0°	14 90
	93	" + 750	0 60	0°	14 90
	94	293 + 100	0 60	0°	14 90
	95	" + 700	0 60	0°	14 90
	96	294 + 450	0 60	0°	14 90
	97	295 + 450	1 60	0°	18 90
	98	" + 650	0.60	0°	14.90
	99	296 + 490	1.10	0°	16 90
	100	" + 650	2 60	0°	22 90
	101	299 + 400	1.60	0	18.90
	102	" + 900	2.10	0°	20 90
	103	300 + 600	0 60	0°	14 90
	104	301 + 550	1.10	0°	16 90
	105	302 + 850	1.10	0°	16 90
	106	303 + 600	1 10	0°	16 90
	107	" + 950	1 10	0°	16 90
	108	307 + 350	0 60	30°	17 21
	109	309 + 10	1 10	0°	16 90
	110	" + 350	0 60	0°	14 90
	111	310 + 650	0 60	0°	14 90
TOTAL			(52 NOS)		996 44 m

SECTION	NO	STATION	OVER-BURDEN (m)	SKEW ANGLE	LENGTH (m)
SECTION 5	112	1 + 450	1 60	0°	18.90
	113	13 + 450	0 60	0°	14 90
	114	14 + 250	0.60	0°	14.90
	115	15 + 850	0 60	0°	14.90
	116	16 + 300	0 60	0°	14 90
	117	" + 950	0 60	0°	14 90
	118	17 + 350	0 60	0°	14 90
	119	18 + 400	0 60	0°	14.90
	120	19 + 400	0 60	0°	14 90
	121	20 + 950	0 60	0°	14 90
	122	21 + 650	0 60	0°	14 90
	123	" + 900	0 60	0°	14 90
	124	22 + 400	0.60	0°	14 90
	125	23 + 50	0.60	0°	14 90
	126	" + 250	0 60	0°	14 90
	127	26 + 700	0 60	0°	14 90
	128	27 + 250	0 60	0°	14 90
	129	28 + 100	0 60	0°	14 90
	130	" + 600	0 60	0°	14 90
	131	30 + 200	0 60	0°	14 90
	TOTAL		(20 NOS)		302 00 m
TOTAL			(131 NOS)		2 455 84 m

TYPE A

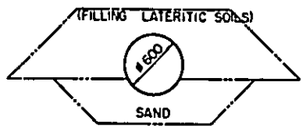

TYPE B

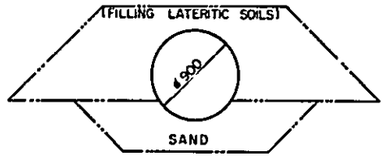

TYPE C

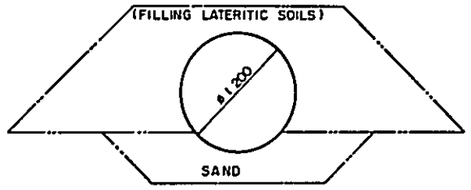

TYPE D

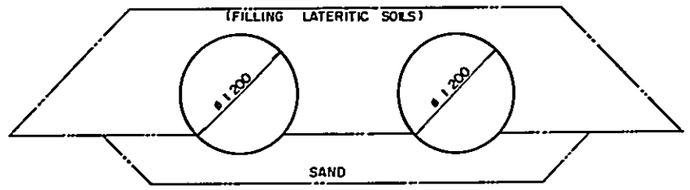

PROFILE

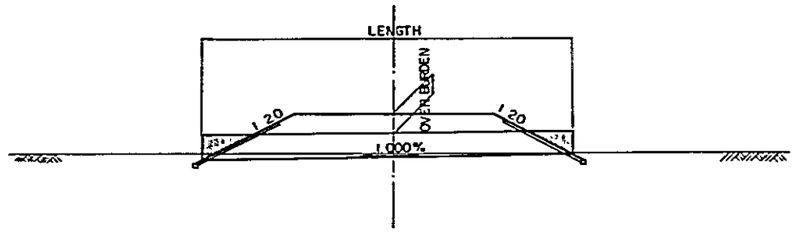

SOUTHERN COASTAL LINK ROAD MATERIAL LIST OF CORRUGATED METAL PIPES ø 600 MINISTRY OF WORKS	NOTES	REVISIONS	ROADS DIVISION DIRECTOR OF ROADS ..... DATE ..... MW, DRG. No.		SCALES	DRG. No. DATE SHEET 265 OF 269

MATERIAL LIST OF CORRUGATED METAL PIPES (2)

TYPE B (ø900)

SECTION	NO	STATION	OVER-BURDEN (m)	SKEW ANGLE	LENGTH (m)
SECTION 1	1	14 + 450	1.30	0°	18.90
	2	15 + 800	1 80	0°	20 90
	3	18 + 550	1 30	0°	18.90
	4	20 + 800	0.80	0°	16.90
	5	21 + 200	0 40	0°	14 90
	6	22 + 700	1.30	0°	18 90
	7	23 + 314	1 80	0°	20 90
	8	24 + 200	0 40	0°	14 90
	9	25 + 950	0 80	0°	16 90
	10	27 + 600	0 40	0°	14 90
	11	44 + 50	0 80	0°	16 90
	12	〃 + 900	0.80	0°	16.90
	13	46 + 50	0.40	0°	14.90
	14	〃 + 750	0 40	0°	14.90
	TOTAL		(14 NOS.)		240 60 m
SECTION 2	15	48 + 250	0 80	0°	16 90
	16	52 + 800	1.30	0°	18 90
	17	53 + 300	0 80	0°	16 90
	18	54 + 10	0 40	0°	14 90
	19	〃 + 600	0 40	0°	14 90
	20	62 + 50	0 50	0°	16 90
	21	70 + 950	0.80	0°	16 90
	22	71 + 750	1 30	0°	18 90
	23	76 + 800	1 30	0°	18 90
	24	77 + 900	0.80	0°	16.90
	25	78 + 600	0 40	0°	14 90
	26	81 + 150	0 40	0°	14 90
	27	84 + 300	1 30	0°	18 90
	28	88 + 100	1 30	0°	18 90
	29	〃 + 800	0 80	0°	16 90
	30	89 + 950	1 30	0°	18 90
	31	90 + 400	1.80	0°	20 90
	32	94 + 800	1 30	0°	18 90
	33	95 + 550	1 30	0°	18 90
	34	96 + 150	0 80	0°	16 90
	35	105 + 400	0.40	0°	14.90
	36	106 + 350	0.80	0°	16 90
	37	108 + 350	0.80	0°	16 90
	38	109 + 450	0 40	0°	14 90
	39	110 + 100	1.80	0°	20 90
	40	〃 + 600	1.30	0°	18 90
	41	118 + 450	1.80	0°	20 90
	42	119 + 50	0 80	0°	16 90
	43	120 + 777	1.30	0°	18 90
	44	121 + 490	1.30	0°	18.90
	45	122 + 550	0 40	0	14 90
	46	123 + 400	0 80	0	16 90
	47	143 + 600	1.80	0°	20.90
	48	148 + 600	0.40	0°	14 90
	TOTAL		(34 NOS.)		596 60 m
SECTION 3	49	149 + 650	2.80	0°	24 90
	50	150 + 8	1 80	0°	20 90
	51	154 + 550	0 80	0°	16 90
	52	155 + 560	2 30	15°	23 72
	53	159 + 950	1.30	0°	22 90
	54	161 + 250	1.80	0°	20 90
	55	〃 + 750	0 80	0°	16 90

SECTION	NO	STATION	OVER-BURDEN (m)	SKEW ANGLE	LENGTH (m)
SECTION 3	56	164 + 800	1 80	0°	20 90
	57	165 + 150	1 30	0°	18 90
	58	166 + 400	1 30	0°	18 90
	59	〃 + 700	1 30	0°	18 90
	60	167 + 750	0 40	0°	14 90
	61	168 + 815	2 30	0°	22 90
	62	171 + 150	0 40	0°	14 90
	63	172 + 450	1 30	0°	18 90
	64	175 + 50	3 30	0°	26 90
	65	177 + 50	0 80	0°	16 90
	66	〃 + 550	1 30	0°	18 90
	67	〃 + 850	0 80	0°	16 90
	68	180 + 450	0 40	0°	14 90
	69	181 + 200	2 30	0°	22.90
	70	185 + 490	3 80	0°	28 90
	71	186 + 950	1 30	30°	21 82
	72	190 + 277	2 30	30°	24 65
	73	〃 + 775	0 80	15°	17.50
	74	194 + 800	0.80	0°	16 90
	75	198 + 100	5 80	0°	36 90
	76	〃 + 423	1 80	0°	20 90
	77	199 + 100	1 80	15°	21 65
	78	201 + 50	2 30	0°	22 90
	79	〃 + 300	2 30	0°	22 90
	80	203 + 550	3 30	15°	27 86
	81	〃 + 729	2 80	0°	24 90
	82	204 + 995	4.30	0°	30 90
	83	218 + 560	3 80	0°	28 90
	84	223 + 667	4 30	30°	35 70
	85	224 + 600	2 80	30°	28 76
	86	225 + 900	2 30	15°	23 72
	87	226 + 665	0 40	0°	14 90
	88	227 + 700	0 40	0°	14 90
	89	228 + 270	2 80	0°	24 90
	90	231 + 750	2.30	0°	22 90
	91	232 + 779	1 30	15°	19 57
	92	234 + 450	3 30	0°	26 90
	TOTAL		(44 NOS.)		990 45 m
SECTION 4	93	235 + 400	3 30	0°	26 90
	94	236 + 150	3.30	0°	26 90
	95	237 + 355	0 40	30°	17.21
	96	238 + 100	1.80	0°	20 90
	97	250 + 150	3 30	0°	26 90
	98	〃 + 510	1 80	0°	20 90
	99	〃 + 750	3 30	0°	26 90
	100	252 + 370	1 80	30°	24 14
	101	261 + 510	1 80	0°	20 90
	102	266 + 10	0.40	0°	14 90
	103	268 + 150	0 40	0°	14 90
	104	272 + 650	1 30	0°	18 90
	105	273 + 990	1 80	0°	20 90
	106	277 + 700	1 80	0°	20 90
	107	280 + 350	1 80	0°	20 90
	108	〃 + 900	1.30	0°	18 90
	109	281 + 950	3 30	0°	26 90
	110	282 + 950	0 40	0°	14 90
	111	289 + 150	0 40	0°	14 90
	112	294 + 750	0 40	0°	14 90

SECTION	NO	STATION	OVER-BURDEN (m)	SKEW ANGLE	LENGTH (m)
SECTION 4	113	306 + 120	2 80	15°	25 79
	114	〃 + 300	3 30	0°	26 90
	TOTAL		(22 NOS.)		466 24 m
SECTION 5	115	1 + 800	1 80	0°	20 90
	116	2 + 400	1 30	0°	18 90
	117	3 + 257	2 30	15°	23 72
	118	〃 + 475	0 40	0°	14 90
	119	5 + 450	2 30	0°	22 90
	120	6 + 550	0 40	0°	14 90
	121	〃 + 990	0 40	0°	14 90
	122	7 + 450	0 80	0°	16 90
	123	〃 + 950	0 40	0°	14 90
	124	8 + 400	0 40	0°	14 90
	125	〃 + 800	0 40	0°	14 90
	126	9 + 150	0 40	0°	14 90
	127	〃 + 600	0 40	0°	14 90
	128	10 + 100	0 40	0°	14 90
	129	〃 + 550	0 40	0°	14 90
	130	〃 + 750	0 40	0°	14 90
	131	11 + 150	0 40	0°	14 90
	132	12 + 550	0 40	0°	14 90
	133	14 + 650	0 40	0°	14 90
	134	17 + 900	0 40	0°	14 90
	135	20 + 550	0 40	0°	14.90
	136	21 + 275	0 80	0°	16 90
	137	22 + 600	0 40	0°	14 90
	138	23 + 600	0 80	0°	16 90
	139	24 + 650	0 40	0°	14 90
	140	25 + 100	0 40	0°	14 90
	141	27 + 950	0 40	0°	14 90
	142	29 + 100	0 40	0°	14.90
	143	〃 + 490	1.80	0°	20 90
	TOTAL		(29 NOS.)		470 92 m
TOTAL			(143 NOS.)		2764.81 m

SOUTHERN COASTAL LINK ROAD MATERIAL LIST OF CORRUGATED METAL PIPES ø 900 MINISTRY OF WORKS	NOTES	REVISIONS	ROADS DIVISION DIRECTOR OF ROADS ..... DATE ..... MW, DRG. No.		SCALES	DRG.No. DATE SHEET 266 OF 269

MATERIAL LIST OF CORRUGATED METAL PIPES (3)

TYPE C (ø1200)

SECTION	NO	STATION	OVER-BURDEN (m)	SKEW ANGLE	LENGTH (m)
SECTION 1	1	40 + 450	0 50	0°	16 90
	2	〃 + 850	1.00	0°	18 90
	3	41 + 250	1 00	0°	18 90
	4	〃 + 750	1 00	0°	18 90
	5	42 + 550	1 50	0°	20 90
	6	43 + 150	1 00	0°	18 90
	TOTAL		(6 NOS)		113 40m
SECTION 2	7	49 + 350	0 50	0°	16 90
	8	〃 + 950	1 00	0°	18 90
	9	50 + 450	1 50	0°	20 90
	10	〃 + 950	1 00	0°	18 90
	11	51 + 250	0 50	0°	16 90
	12	〃 + 550	1 00	0°	18 90
	13	〃 + 950	0.50	0°	16 90
	14	52 + 300	0 50	0°	16 90
	15	55 + 250	0 50	0°	16 90
	16	〃 + 700	0 50	0°	16 90
	17	56 + 400	0 50	0°	16.90
	18	57 + 200	1.00	0°	18 90
	19	〃 + 800	0 50	0°	16 90
	20	58 + 100	1 00	0°	18 90
	21	〃 + 350	2 00	0°	22 90
	22	59 + 10	1.50	0°	20 90
	23	〃 + 650	1 00	0°	18 90
	24	60 + 225	2 00	0°	22 90
	25	61 + 84	2.50	0°	24.90
	26	62 + 600	0 50	0°	16 90
	27	63 + 150	1 00	0°	18 90
	28	64 + 50	0 50	0°	16 90
	29	65 + 250	0 50	0°	16 90
	30	69 + 417	1.00	0°	18 90
	31	70 + 450	1 00	0°	18 90
	32	72 + 700	1 50	0°	20.90
	33	73 + 450	0 50	0°	16 90
	34	74 + 850	1.00	0°	18 90
	35	75 + 150	1.50	0°	20 90
	36	〃 550	0 50	0°	16 90
	37	76 + 200	0 50	0°	16 90
	38	78 + 200	0 50	15°	17.50
	39	79 + 200	0 50	0°	16 90
	40	80 + 50	1.50	0°	20 90
	41	81 + 950	1 00	0°	18.90
	42	82 + 600	0 50	0°	16 90
	43	85 + 725	2 00	30°	26 45
	44	86 + 72	2.00	30°	26 45
	45	〃 + 510	3 50	30°	33.38
	46	91 + 600	1 00	15°	19 53
	47	92 + 50	2 50	0°	24.90
	48	〃 + 903	3 00	15°	27.86
	49	93 + 250	1 50	0°	20 90
	50	96 + 510	1.50	0°	20.90
	51	97 + 10	3 00	0°	26 90
	52	〃 + 750	2 00	0°	22.90
	53	98 + 950	1 00	0°	18 90
	54	103 + 750	1 50	0°	20.90
	55	107 + 414	2.00	15°	23 72
	56	114 + 200	1.00	0°	18 90
	57	115 + 160	1 00	0°	18.90
SECTION 2	58	124 + 583	4 00	0°	30 90
	59	133 + 230	2 00	0°	22 90
	60	135 + 650	3 50	0°	28 90
	61	144 + 830	5 00	15°	36 15
	62	146 + 650	4 50	0°	32 90
	63	147 + 135	2 00	0°	22 90
	64	148 + 250	3 00	30°	31.07
	TOTAL		(58 NOS)		1 228 21m
SECTION 3	65	156 + 990	1.50	0°	20 90
	66	157 + 260	2 00	0°	22 90
	67	158 + 100	1 00	0°	18 90
	68	〃 + 490	2 00	0°	22 90
	69	159 + 725	1 00	30°	21 82
	70	162 + 700	1 00	0°	18 90
	71	164 + 300	1 00	0°	18 90
	72	168 + 200	0 50	0°	16 90
	73	171 + 350	1.00	0°	18 90
	74	172 + 980	1 00	0°	18 90
	75	176 + 280	1 00	15°	19 57
	76	179 + 700	5 00	0°	34 90
	77	180 + 125	2 00	0°	22 90
	78	181 + 350	1 50	0°	20 90
	79	〃 + 850	2 50	0°	24 90
	80	184 + 935	0 50	0°	16 90
	81	189 + 255	1 50	30°	24 14
	82	202 + 868	5 00	15°	36 15
	83	203 + 835	4 00	30°	35.70
	84	217 + 190	2 50	0°	24 90
	85	227 + 850	1.00	15°	19 57
	86	229 + 583	2 00	15°	23 72
	87	231 + 150	2 00	30°	26 45
	88	232 + 300	3 00	30°	31 07
	TOTAL		(24 NOS)		561 69m
SECTION 4	89	237 + 470	2 00	30°	26 45
	90	242 + 200	1 50	0°	20 90
	91	251 + 520	6 50	0°	40 90
	92	252 + 575	2 00	0°	22 90
	93	256 + 300	1 50	0°	20 90
	94	259 + 228	3 00	0°	26 90
	95	260 + 10	2.00	0°	22.90
	96	〃 + 750	4 00	0°	30 90
	97	262 + 150	3 50	0°	28 90
	98	263 + 10	4 00	0°	30 90
	99	268 + 600	1 00	0°	18 90
	100	269 + 600	0 50	0°	16 90
	101	270 + 990	2 00	0°	22.90
	102	275 + 550	2 50	0°	24 90
	103	281 + 600	1 50	0°	20 90
	104	297 + 650	1.50	0°	20 90
	105	298 + 100	2 00	0°	22 90
	106	300 + 900	1 00	0°	18.90
	TOTAL		(18 NOS)		439 75m
SECTION 5	107	0 + 280	1 50	30°	24.14
	108	25 + 950	0 50	0°	16 90
	TOTAL		(2 NOS)		41 04m
TOTAL			(108 NOS)		2 384 09m

TYPE D (2xø1200)

SECTION	NO	STATION	OVER-BURDEN (m)	SKEW ANGLE	LENGTH (m)
SECTION 1	1	17 + 10	0 50	0°	16 90
	TOTAL		(1 NOS)		16.90x2=33.80m
SECTION 2	2	67 + 900	1.50	0°	20 90
	3	93 + 127	2.00	15°	23 72
	4	〃 + 388	2 00	15°	23 72
	5	129 + 50	1 50	0°	20.90
	6	130 + 83	3 50	0°	28 90
	7	132 + 510	1.00	0°	18 90
	8	139 + 930	1.50	30°	24.14
	TOTAL		(7 NOS)		161.82x2=322.36m
SECTION 3	9	173 + 594	1 50	15°	21 65
	10	193 + 840	2 50	15°	25 79
	11	197 + 726	4 50	0°	32 90
	12	228 + 750	3 00	0°	26 90
	13	230 + 926	4 00	15°	32 01
	14	233 + 875	4 00	0°	30 90
	TOTAL		(6 NOS)		170.15x2=340.30m
SECTION 4	15	240 + 490	1 00	0°	18 90
	16	243 + 850	2 50	0°	24 90
	17	297 + 350	3 50	0°	28 90
	TOTAL		(3 NOS)		72.70x2=146.40m
SECTION 5	18	3 + 864	3 50	0°	28 90
	19	11 + 850	2 00	0°	22 90
	20	19 + 812	2.00	15°	23 72
	21	20 + 136	1 00	0°	18 90
	TOTAL		(4 NOS)		94.42x2=188.84m
TOTAL			(21 NOS)		515.35x2 m =1030.70

SOUTHERN COASTAL LINK ROAD	NOTES	REVISIONS	ROADS DIVISION		SCALES	DRG.No.
MATERIAL LIST OF CORRUGATED METAL PIPES ø1.200			DIRECTOR OF ROADS			DATE
MINISTRY OF WORKS			DATE			SHEET 267 OF 269
			MW, DRG. No.			

PLAN Scale 1:100

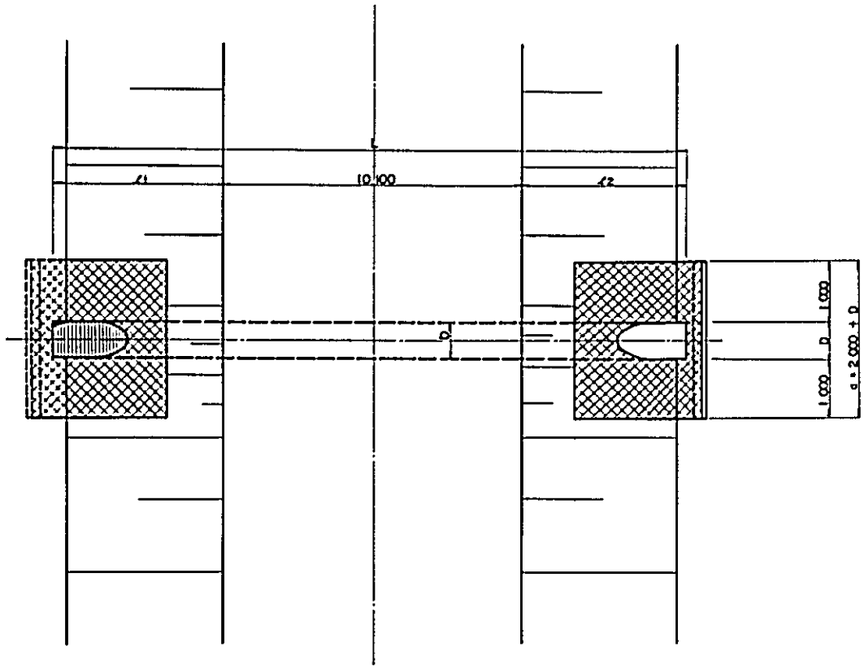

TYPICAL CROSS SECTION Scale 1:50

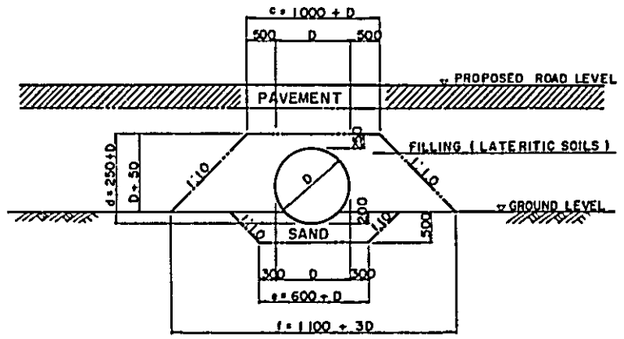

LIST OF PIPE LENGTH

SKEW ANGLE		H	1.00	1.50	2.00	2.50	3.00	3.50	4.00	4.50	5.00	5.50	6.00	6.50	7.00	7.50	10.00
	l_1	0°	2.55	3.57	4.59	5.61	6.63	7.65	8.67	9.69	10.72	11.74	12.76	13.78	14.80	15.82	20.92
		15°	2.64	3.70	4.75	5.81	6.86	7.92	8.97	10.03	11.10	12.15	13.20	14.26	15.32	16.37	21.66
		30°	2.94	4.12	5.30	6.48	7.65	8.83	10.01	11.19	12.38	13.56	14.73	15.91	17.09	18.27	24.16
	l_2	0°	2.25	3.43	4.21	5.20	6.18	7.16	8.14	9.12	10.10	11.08	12.06	13.04	14.02	15.00	19.90
		15°	2.33	3.34	4.36	5.38	6.40	7.41	8.43	9.44	10.45	11.47	12.49	13.50	14.51	15.53	20.60
		30°	2.66	3.73	4.86	6.00	7.14	8.27	9.40	10.53	11.66	12.79	13.93	15.06	16.19	17.32	22.98
	L	0°	14.90	16.90	18.90	20.91	22.91	24.91	26.91	28.91	30.92	32.92	34.92	36.92	38.92	40.92	50.92
		15°	15.43	17.50	19.57	21.65	23.72	25.79	27.86	29.93	32.01	34.08	36.15	38.22	40.29	42.36	52.72
		30	17.21	19.51	21.82	24.14	26.45	28.76	31.07	33.38	35.70	38.01	40.32	42.63	44.94	47.25	58.80

STONE PITCHING AREA

D	a	b	c	d	e	f	g	STONE PITCHING AREA (M²)
ø 0.600	4.60	3.35	2.60	1.20	1.60	5.00	1.50	16.30
ø 0.900	4.90	4.02	2.90	1.50	1.90	5.90	1.80	20.80
ø 1.200	5.20	4.70	3.20	1.80	2.20	6.80	2.10	25.54

DETAIL-I Scale 1:20

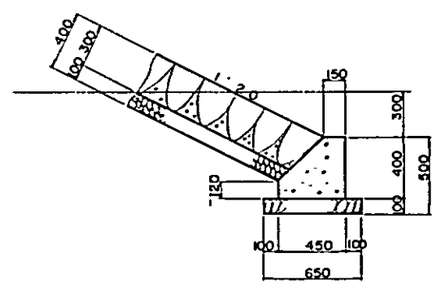

PROFILE Scale 1:100

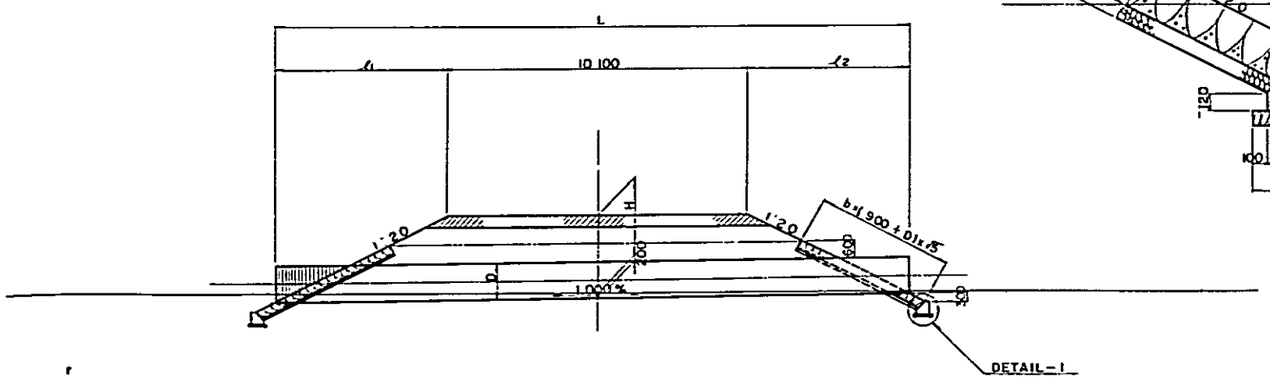

SOUTHERN COASTAL LINK ROAD PIPE CULVERT (CORRUGATED METAL PIPE) MINISTRY OF WORKS	NOTES	REVISIONS	ROADS DIVISION DIRECTOR OF ROADS ..... DATE ..... MW, DRG. No.		SCALES	DRG.No. DATE SHEET 268 OF 269

PLAN

Scale 1 : 100

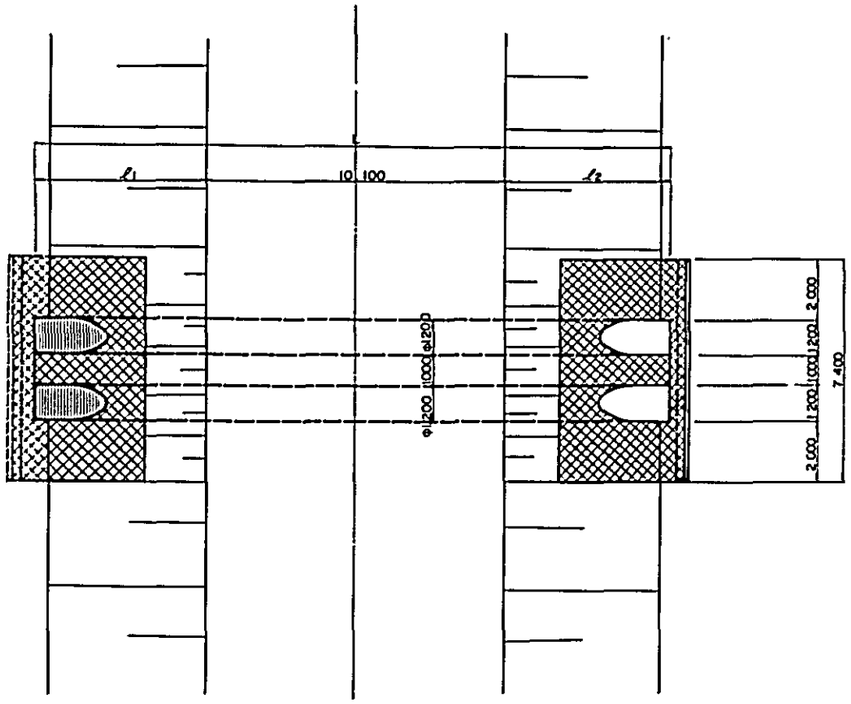

TYPICAL CROSS SECTION

Scale 1 : 50

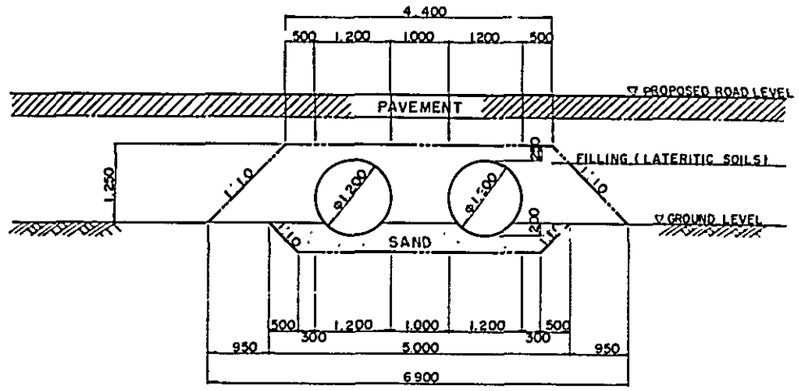

LIST OF PIPE LENGTH

		H	1 00	1 50	2.00	2 50	3.00	3 50	4 00	4 50	5 00	5 50	6 00	6 50	7 00	7 50	10CC	STONE PITCHING AREA (M²)
SKEW ANGLE	ℓ1	0°	2.55	3.57	459	5 61	6 63	7 65	8 67	9 69	10 72	11.74	12.76	13 78	14 80	15 82	20 92	41 68
		15°	2 64	3.70	4 75	5.81	6 86	7.92	8 97	10 03	11.10	12.15	13 20	14 26	15.32	16 37	21 66	
		30°	2.94	4.12	5 30	6 48	7.65	8 83	10 01	11 19	12 38	13.56	14 73	15 91	17 09	18 27	24 16	
	ℓ2	0°	2 25	3 23	4 21	5.20	6.18	7.16	8 14	9 12	10 10	11 08	12 06	13 04	14 02	15 00	19 90	
		15°	2.33	3 34	4 36	5.38	6.40	7.41	8 43	9 44	10 45	11 47	12.49	13.50	14 51	15 53	20 60	
		30°	2 66	3 73	4.86	6 00	7.14	8.27	9 40	10 53	11 66	12 79	13.93	15.06	16 19	17.32	22.98	
	L	0°	14 90	16 90	18.90	20 91	22.91	24 91	26.91	28 91	30.92	32.92	34 92	36.92	38.92	40 92	50.92	
		15°	15.43	17.50	19 57	21 65	23.72	25 79	27.86	29 93	32.01	34 08	36 15	38.22	40 29	42.36	52.72	
		30°	17 21	19.51	21 82	24 14	26 45	28 76	31.07	33.38	35 70	38.01	40.32	42.63	44 94	47 25	58 80	

DETAIL-2

Scale 1 : 20

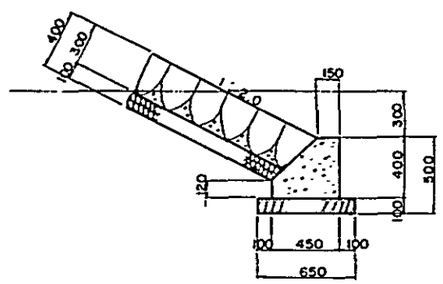

PROFILE

Scale 1 : 100

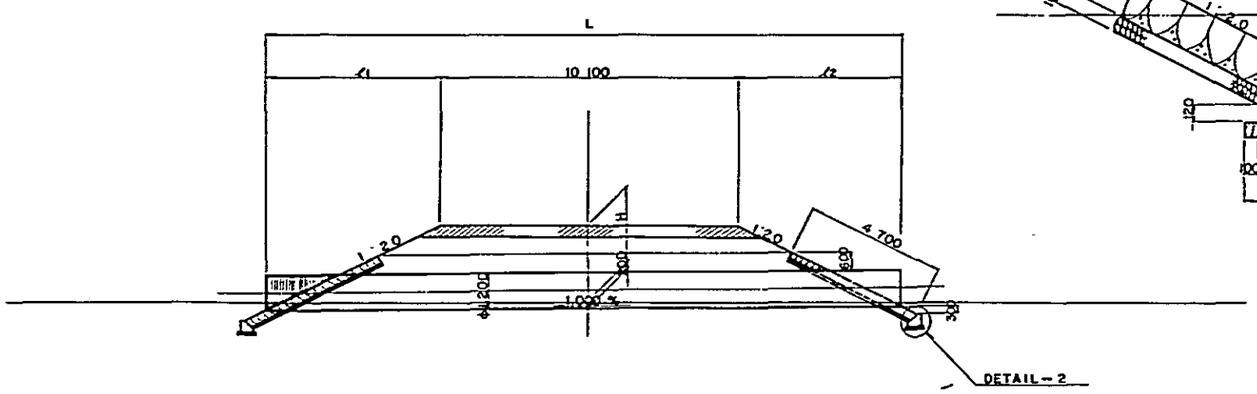

SOUTHERN COASTAL LINK ROAD PIPE CULVERT (CORRUGATED METAL PIPE) MINISTRY OF WORKS	NOTES	REVISIONS	ROADS DIVISION DIRECTOR OF ROADS ..... DATE ..... MW, DRG. No.		SCALES	DRG. No. DATE SHEET 269 OF 269