社会開発協力部報告書

No. 5

AFRICAN DEVELOPMENT BANK

GOVERNMENT OF MAURITIUS

BEAU BASSIN - PORT LOUIS LINK ROAD

QUANTITY MEASUREMENT

OF

BRIDGES
(Substructures)

JICA LIBRARY
1063066[3]

SEPTEMBER 1980

Japan International Cooperation Agency

S D F
[redacted]
80-100

国際
55.
登録No.

国際協力事業団
受入月日 '84. 5. 15
登録No. 04527
410
61.5
SDF

CONTENTS

1. Motorway Junction

2. Rampway Bridge

3. Over Bridge

4. G.R.N.W. and St. Louis River Bridge

5. Pedestrian Bridge and Aquaduct

1. Motorway Junction (A, B-Line, E-Rump)

Page

CONTENTS

§§ 1 LIST OF MATERIALS ---------- 1.

§§ 2 A - LINE - 1. B. R. ---------- 2.

§§ 3. A - LINE - 2. B. R ---------- 31.

§§ 4. A - LINE - 3. B.R ---------- 77.

§§ 5. B - LINE - 1. B.R ---------- 106.

§§ 6. B - LINE - 2. B.R ---------- 133.

§§ 7. B - LINE - 3. B.R ---------- 179.

§§ 8. E - RAMP. B.R ---------- 203.

§§ 9. RETAINING WALL ---------- 246.

§§ 10 MISCELLANEOUS WORK ---------- 300.

SUMMARY OF QUANTITIES

Sheet 1/3

Item no.	Description	Unit	A-Le.1 Br. A1	A-Le.1 Br. A2	A-Le.1 Br. TOTAL	B-Le.1 Br. A1	B-Le.1 Br. A2	B-Le.1 Br. TOTAL	A-Le.2 Br. A1	A-Le.2 Br. P1	A-Le.2 Br. P2	A-Le.2 Br. A2	A-Le.2 Br. TOTAL	B-Le.2 Br. A1	B-Le.2 Br. P1	B-Le.2 Br. P2
C	EARTHWORKS															
C 02	Structure Excavation															
01	Structure Excavation, Common	m^3	182.7	223.4	406.1	240.6	265.7	506.3	261.6	—	86.5	424.5	772.6	412.9	—	142.8
02	Structure Excavation, Rock	m^3	52.0	106.1	158.1	25.5	30.5	56.0	72.9	219.9	254.7	62.1	609.6	32.2	188.0	190.2
03	Structure backfill, Selected Materials	m^3	894	1265	2 159	959	1352	2 311	1519	—	—	1263	2782	1548	—	—
D	STRUCTURAL CONCRETE															
D 01	Concrete															
03	Concrete, Grade 25	m^3	(14.3) 190.1	(14.3) 254.3	473.0	(14.3) 194.1	(14.3) 269.7	492.4	(14.3) 299.5	148.3	110.1	(14.3) 254.1	840.6	(14.3) 292.5	149.6	110.1
05	Concrete, Grade 15	m^3	13.8	16.9	30.7	48.3	16.9	65.2	17.9	7.7	6.5	16.9	49.0	17.9	7.7	6.5
D 02	Formworks															
01	Fair finish plane formworks type-A	m^2	431.3	533.8	965.1	457.8	582.8	1040.6	660.0	82.1	50.0	533.1	1295.2	632.6	82.1	50.0
02	Fair finish curved formworks type-B	m^2	—	—	—	—	—	—	—	90.3	62.1	—	152.4	—	92.8	62.1
05	Plane tough finish formworks type-E	m^2	(9.5) 37.4	(9.5) 44.9	101.3	(9.5) 54.4	(9.5) 44.9	118.3	(9.5) 46.1	53.0	44.2	(9.5) 44.9	207.2	(9.5) 46.1	53.0	44.2
D 03	Reinforcing steel															
03	H.y.s., D.b., not exceeding φ16mm	t	(1.1) 11.0	(1.1) 12.8	26.0	(1.1) 11.4	(1.1) 13.5	27.1	(1.1) 14.4	1.7	1.3	(1.1) 12.7	32.3	(1.1) 14.1	1.6	1.3
04	H.y.s., D.b., φ20mm or greater	t	3.2	5.1	8.3	3.3	5.3	8.6	6.4	13.9	9.7	5.2	35.2	6.1	14.0	9.7
	Filter Material	m^3	20	22	42	22	27	49	28	—	—	26	54	29	—	—
B	DEMOLITION															
B 02	Removal of Structures															
02	Concrete structures	m^3	—	—	—	—	—	—	—	—	—	—	—	—	—	—
03	Existing metal structures	t	—	—	—	—	—	—	—	—	—	—	—	—	—	—
	REMARKS		( ) shows approach slab													

SUMMARY OF QUANTITIES Sheet 2/3

Item no.	Description	Unit	B-Le.2 Br. A2	B-Le.2 Br. TOTAL	A-Le.3 Br. A1	A-Le.3 Br. A2	A-Le.3 Br. TOTAL	B-Le.3 Br. A1	B-Le.3 Br. A2	B-Le.3 Br. TOTAL	E-Rp. Br A1	E-Rp. Br P1	E-Rp. Br P2	E-Rp. Br A2	E-Rp. Br TOTAL
C	EARTHWORKS														
C 02	Structure Excavation														
01	Structure Excavation, Common	m^3	702.9	1258.6	1091.8	1210.4	2302.2	1156.7	883.3	2040.0	189.0	—	—	363.9	552.9
02	Structure Excavation, Rock	m^3	54.3	464.7	89.7	36.6	126.3	62.7	28.2	90.9	10.1	151.5	—	29.7	191.3
03	Structure backfill, Selected Materials	m^3	1433	2981	2175	1188	3363	1268	651	1919	274	—	—	907	1181
D	STRUCTURAL CONCRETE														
D 01	Concrete		(14.3)		(24.1)	(24.1)		(14.3)	(14.3)		(9.8)			(9.8)	
03	Concrete, Grade 25	m^3	328.7	909.5	400.6	270.6	719.4	310.2	218.2	557.0	83.1	101.8	44.9	237.2	486.6
05	Concrete, Grade 15	m^3	17.9	50.0	30.3	268.3	298.6	30.5	259.2	289.7	31.2	6.5	—	16.2	53.9
D 02	Formworks														
01	Fair finish plane formworks type-A	m^2	836.3	1571.0	819.3	550.4	1369.7	656.3	336.7	993.0	141.4	33.8	46.6	540.9	762.7
02	Fair finish curved formworks type-B	m^2	—	154.9	—	—	—	—	—	—	—	70.0	55.3	—	125.3
05	Plane rough finish formworks type-E	m^2	(9.5) 46.1	208.4	(18.1) 73.7	(18.1) 159.0	268.9	(10.3) 74.7	(10.3) 154.4	249.7	(7.5) 44.9	44.2	—	(7.5) 43.6	147.7
D 03	Reinforcing steel														
03	H.y.s., D.b., not exceeding φ16mm	t	(1.1) 14.2	33.4	(1.9) 22.0	(1.9) 16.0	41.8	(1.1) 20.1	(1.1) 6.4	28.7	(0.7) 3.3	1.5	0.5	(0.7) 12.7	19.4
04	H.y.s., D.b., φ20mm or greater	t	8.3	38.1	6.0	3.7	9.7	6.1	6.3	12.4	1.8	9.4	5.6	5.1	21.9
	Filter material	m^3	22	51	39	28	67	24	30	54	9	—	—	17.0	26
B	DEMOLITION														
B 02	Removal of Structures														
02	Concrete structures	m^3													
03	Existing metal structures	t													
	REMARKS														

SUMMARY OF QUANTITIES Sheet 3 / 3

BRIDGE NAME			Mwy. Jun. Brs. Retaining Walls						
Item no.	Description	Unit	RW1	RW2	RW3	RW4	RW5	RW6	TOTAL
C	EARTHWORKS								
C 02	Structure Excavation								
01	Structure Excavation, Common	m^3	202.9	342.2	320.3	523.8	301.5	270.0	1960.7
02	Structure Excavation, Rock	m^3	31.7	75.0	38.5	46.4	46.1	32.4	270.1
03	Structure backfill, Selected Materials	m^3	—	—	—	—	—	—	—
D	STRUCTURAL CONCRETE								
D 01	Concrete								
03	Concrete, Grade 25	m^3	108.1	261.0	283.9	226.2	220.7	91.7	1191.6
05	Concrete, Grade 15	m^3	14.3	24.6	18.0	15.1	18.9	73.9	164.8
D 02	Formworks								
01	Fair finish plane formworks type-A	m^2	175.5	332.3	394.5	341.2	789.3	173.8	2206.6
02	Fair finish curved formworks type-B	m^2	—	—	—	—	—	—	—
05	Plane rough finish formworks type-E	m^2	56.7	66.5	89.8	58.0	56.2	79.6	406.8
D 03	Reinforcing steel								
03	H.y.s., D.b., not exceeding φ16mm	t	3.0	4.7	5.0	3.7	14.7	2.1	33.2
04	H.y.s., D.b., φ20mm or greater	t	7.3	17.6	12.7	12.7	7.7	3.7	56.7
	Filter Material	m^3	37	74	102	69	67	34	383
B	DEMOLITION								
B 02	Removal of Structures								
02	Concrete structures	m^3							
03	Existing metal structures	t							
	REMARKS .								

§§ 2. A-LINE-1 B.R.

A_1 - ABUTMENT

§ 1 STRUCTURAL FIGURE

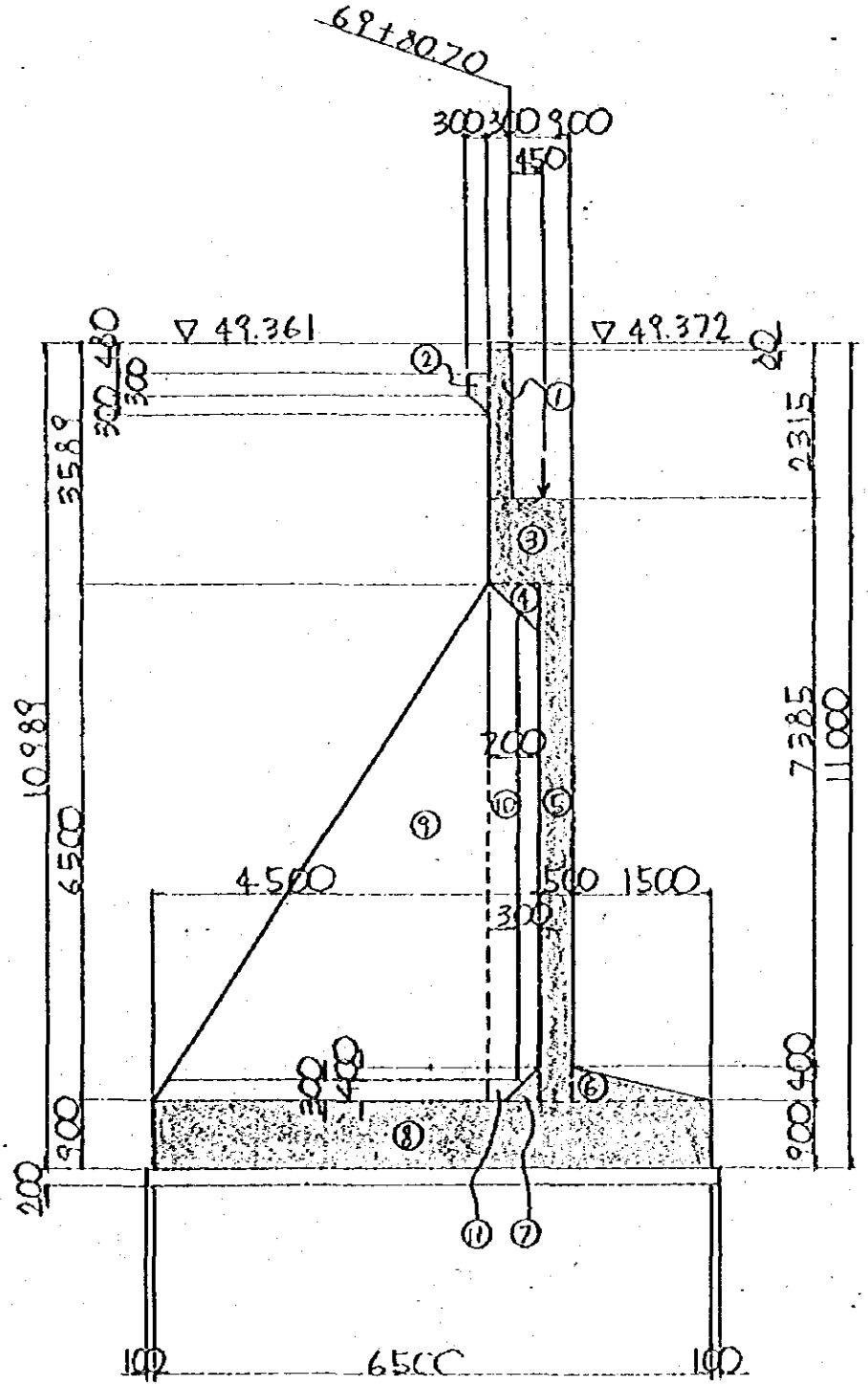

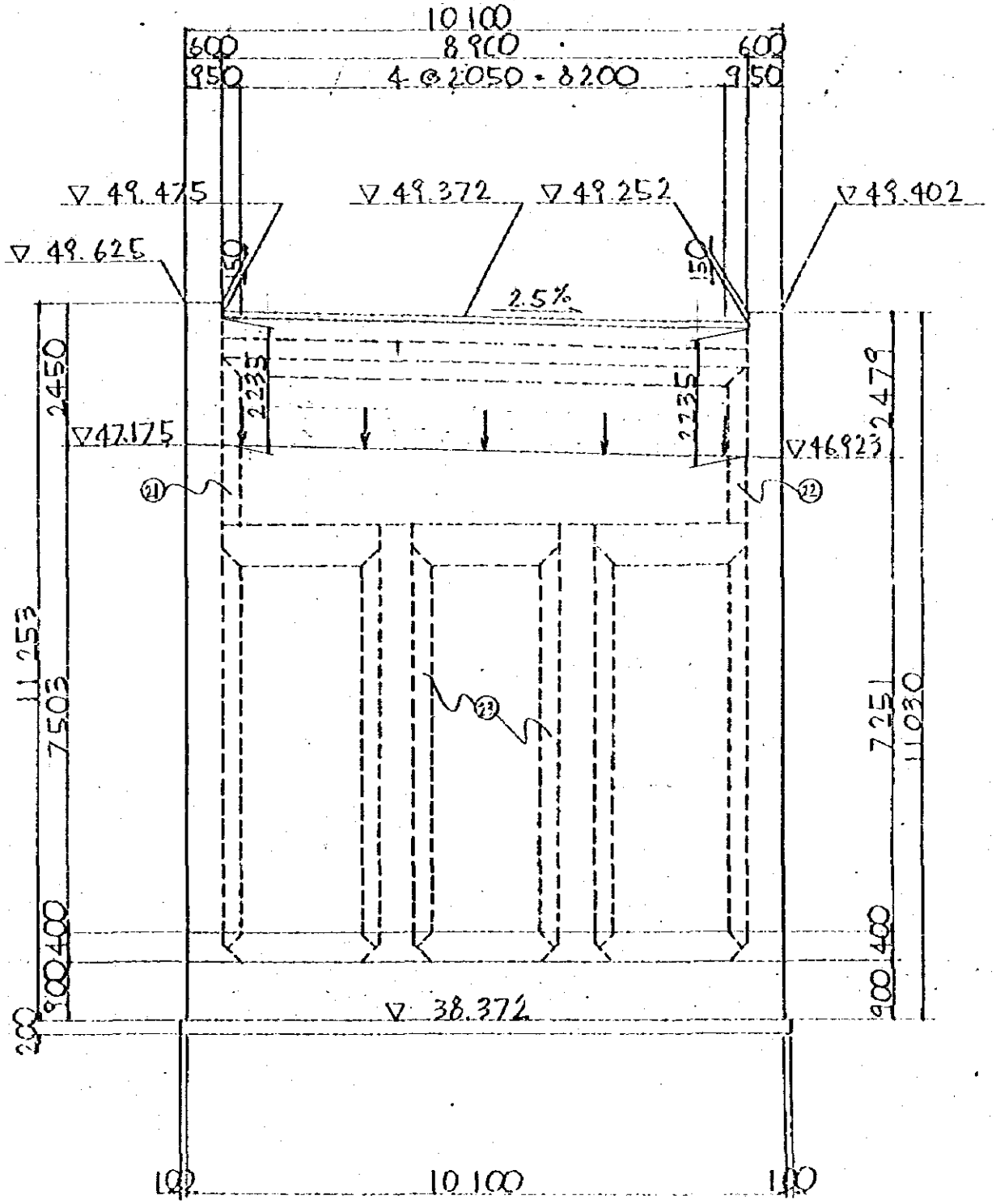
10 100
600
8 900
600
950
4 @ 2050 = 8200
950
▽ 49.475
▽ 49.372
▽ 49.252
▽ 49.402
▽ 49.625
50
50
2.5%
2450
2235
2235
2479
▽ 47.175
▽ 46.923
21
22
23
11 253
7503
7251
11 030
400
400
900
900
200
▽ 38.372
100
10 100
100

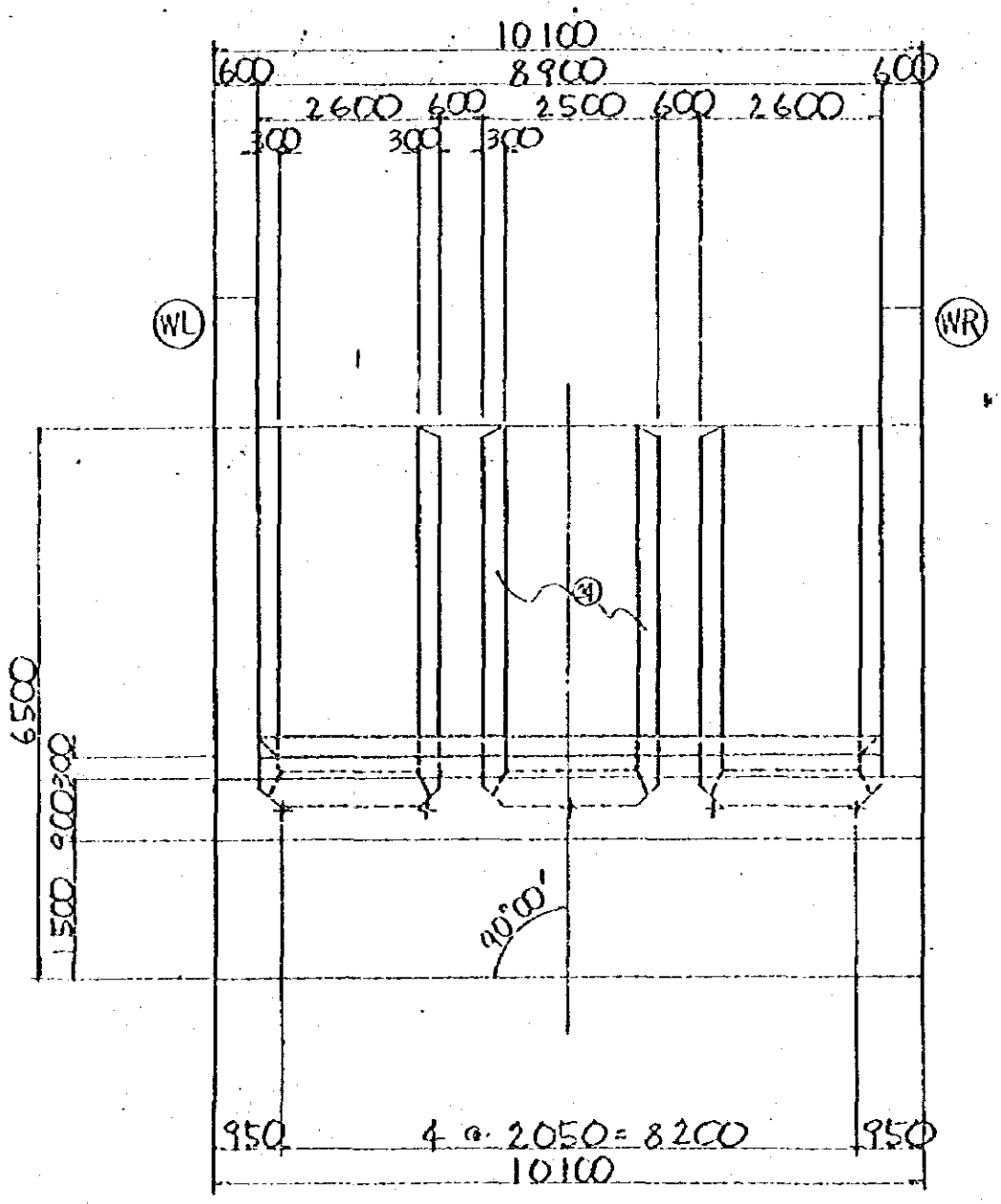
10100
600
8900
600
2600
600
2500
600
2600
300
300
300
WL
WR
6500
300
900
1500
90°00'
950
4 @ 2050 = 8200
950
10100

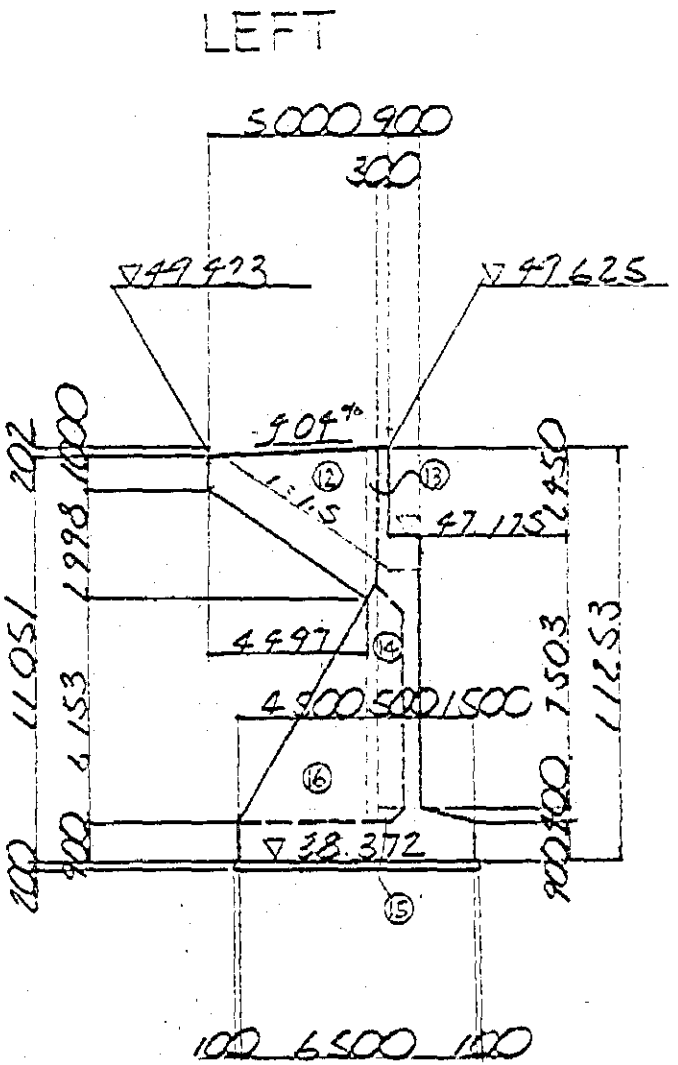
LEFT
5000 900
300
49.423
49.625
4.04%
1:1.5
47.125
4497
4500 5001500
38.372
100 6500 100
(t=600)

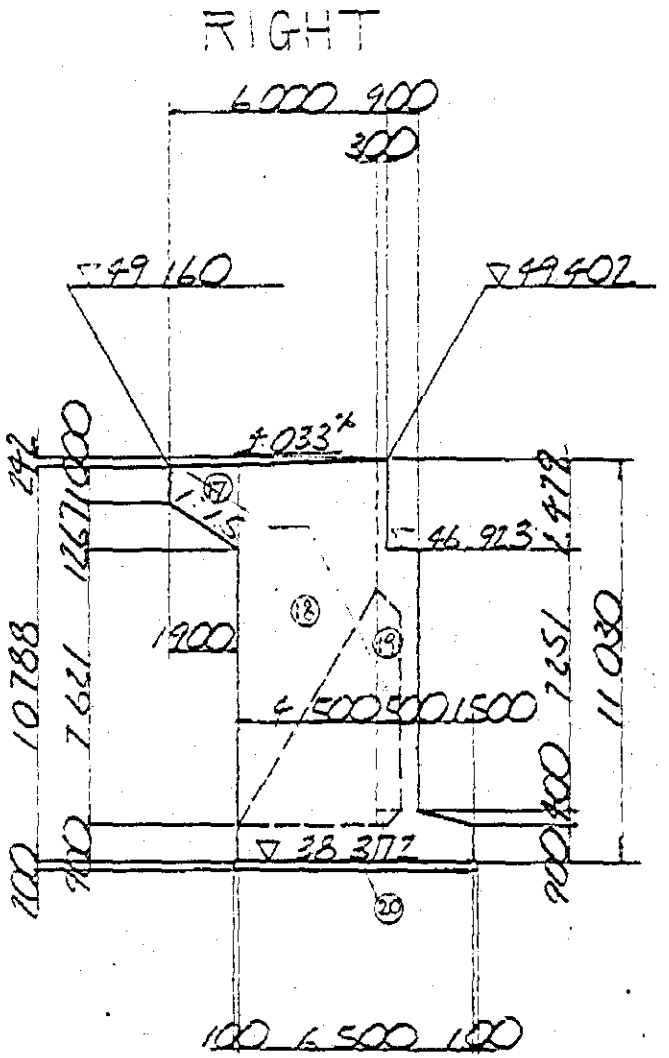
RIGHT
6000 900
300
49.160
49.402
4.033%
1:1.5
46.923
1900
4500 5001500
38.372
100 6500 100
(t=600)

§ 2. concrete volume

Parapet

① $\frac{1}{2} \times (2.45 + 2.465) \times 0.60 \times 0.30 = 0.442$

$2.235 \times 8.90 \times 0.30 = 5.967$

$\frac{1}{2} \times (2.465 + 2.479) \times 0.60 \times 0.30 = 0.445$

② $\frac{1}{2} \times (0.30 + 0.60) \times 0.30 \times 8.90 = 1.202$

wall

③ $\frac{1}{2} \times (1.403 + 1.151) \times 10.10 \times 1.20 = 15.477$

④ $\frac{1}{2} \times 0.70 \times 0.70 \times 10.10 = 2.475$

⑤ $0.50 \times 6.50 \times 10.10 = 32.825$

footing

⑥ $\frac{1}{2} \times 1.50 \times 0.40 \times 10.10 = 3.03$

⑦ $\frac{1}{2} \times 0.40 \times 0.40 \times 10.10 = 0.808$

⑧ $6.50 \times 10.10 \times 0.90 = 59.085$

buttress

⑨ $\frac{1}{2} \times 6.50 \times 3.80 \times 0.60 \times 2 = 14.82$

⑩ $\frac{1}{2} \times (6.10 + 5.40) \times 0.70 \times 0.60 \times 2 = 4.83$

⑪ $\frac{1}{2} \times (0.30 + 0.70) \times 0.40 \times 0.60 \times 2 = 0.24$

wing (left)

⑫ $\frac{1}{2} \times (1.00 + 4.18) \times 4.497 \times 0.60 = 6.988$

⑬ $\frac{1}{2} \times (10.333 + 10.341) \times 0.203 \times 0.60 = 1.259$

⑭ $\frac{1}{2} \times (6.10 + 5.40) \times 0.70 \times 0.60 = 2.415$

⑮ $\frac{1}{2} \times (0.30 + 0.70) \times 0.40 \times 0.60 = 0.12$

⑯ $\frac{1}{2} \times 6.50 \times 3.80 \times 0.60 = 7.41$

wing (right)

⑰ $\frac{1}{2} \times (1.00 + 2.344) \times 1.90 \times 0.60 = 1.906$

⑱ $\frac{1}{2} \times (9.965 + 10.118) \times 3.80 \times 0.60 = 22.895$

⑲ $\frac{1}{2} \times (6.10 + 5.40) \times 0.70 \times 0.60 = 2.415$

⑳ $\frac{1}{2} \times (0.30 + 0.70) \times 0.40 \times 0.60 = 0.12$

haunch

㉑ $\frac{1}{2} \times 0.30 \times 0.30 \times 2.638 = 0.119$

㉒ $\frac{1}{2} \times 0.30 \times 0.30 \times 2.386 = 0.107$

㉓ $\frac{1}{2} \times 0.30 \times 0.30 \times 5.70 \times 6 = 1.539$

㉔ $\frac{1}{2} \times 0.30 \times 0.30 \times 4.40 \times 6 = 1.188$

$\Sigma V = 190.127\ m^3$

grand total

$V = 190.127\ m^3$

blinding concrete

$6.70 \times 10.30 \times 0.20 = 13.802\ m^3$

§ 3 form area

palapet

① $\frac{1}{2} \times (2.45 + 2.465) \times 0.60$ = 1.475

2.235×8.90 = 19.892

2.235×8.90 = 19.892

$-0.60 \times 8.90 + 0.30 \times 1.235 \times 2$ = − 6.081

$\frac{1}{2} \times (2.465 + 2.479) \times 0.60$ = 1.483

$0.30 \times (2.45 + 2.479)$ = 1.479

$0.23 \times 0.30 \times 2$ = 0.138

② 0.30×8.90 = 2.67

$0.30 \times \sqrt{2} \times 8.90$ = 3.776

wall

③ $\frac{1}{2} \times (1.403 + 1.151) \times 10.10$ = 12.898

$\frac{1}{2} \times (1.381 + 1.174) \times 8.30$ = 10.603

$1.20 \times (1.403 + 1.151)$ = 3.065

④ $0.40 \times \sqrt{2} \times (2.60 + 2.50)$ = 4.356

$\frac{1}{2} \times (2.00 + 2.60) \times 0.30 \times \sqrt{2} \times 2$ = 1.952

$\frac{1}{2} \times (1.90 + 2.50) \times 0.30 \times \sqrt{2}$ = 0.933

$\frac{1}{2} \times 0.70 \times 0.70 \times 2$ = 0.49

⑤ 6.50×10.10 = 65.65

$5.40 \times 2.00 \times 2$ = 21.60

5.40×1.90 = 10.26

$0.50 \times 6.50 \times 2 = 6.50$

footing

⑥ $\frac{1}{2} \times 1.50 \times 0.40 \times 2 = 0.60$

⑦ $\frac{1}{2} \times 0.40 \times 0.40 \times 2 = 0.16$

⑧ $(6.50 + 10.10) \times 2 \times 0.90 = 29.88$

buttress

⑨ $\frac{1}{2} \times 6.20 \times 3.625 \times 2 \times 2 = 44.95$

$\sqrt{3.80^2 + 6.50^2} \times 0.60 \times 2 = 9.035$

⑩ $\frac{1}{2} \times (6.20 + 5.80) \times 0.40 \times 2 \times 2 = 9.60$

wing (left)

⑫ $\frac{1}{2} \times (1.00 + 4.18) \times 4.497 \times 2$ = 23.294

$(1.00 + \sqrt{2.998^2 + 4.497^2}) \times 0.60$ = 3.843

⑬ $\frac{1}{2} \times (10.333 + 10.341) \times 0.203 \times 2$ = 4.197

$-0.203 \times (0.30 + 3.238)$ = − 0.718

⑭ $\frac{1}{2} \times (6.10 + 5.40) \times 0.70$ = 4.025

$\frac{1}{2} \times (6.20 + 5.80) \times 0.40$ = 2.40

⑮ $\frac{1}{2} \times (0.30 + 0.70) \times 0.40$ = 0.20

⑯ $\frac{1}{2} \times 6.153 \times 3.597$ = 11.066

$\frac{1}{2} \times 5.853 \times 3.422$ = 10.014

$\sqrt{6.153^2 + 3.597^2} \times 0.60$ = 4.276

wing (right)

⑰ $\frac{1}{2} \times (1.00 + 2.344) \times 1.90 \times 2$ = 6.354

$(1.00 + \sqrt{1.267^2 + 1.90^2}) \times 0.60$ = 1.97

⑱ $\frac{1}{2} \times (9.965 + 10.118) \times 3.80 \times 2$ = 76.315

$-0.30 \times (3.80 + 3.386)$ = − 2.156

0.60×7.621 = 4.573

⑲ $\frac{1}{2} \times (6.10 + 5.40) \times 0.70$ = 4.025

$\frac{1}{2} \times (6.20 + 5.80) \times 0.40$ = 2.40

⑳ $\frac{1}{2} \times (0.30 + 0.70) \times 0.40$ = 0.20

haunch

(21)	$0.30 \times \sqrt{2} \times 2.638$	=	1.119
(22)	$0.30 \times \sqrt{2} \times 2.386$	=	1.012
(23)	$0.30 \times \sqrt{2} \times 5.70 \times 6$	=	14.510
(24)	$0.30 \times \sqrt{2} \times 4.50 \times 6$	=	11.455
	$\frac{1}{2} \times 0.30 \times 0.30 \times 2$	=	0.09
	$\frac{1}{2} \times 0.30 \times 0.348 \times 4$	=	0.209
	ΣA	=	461.929 m^2

blinding concrete form area

$(6.70 + 10.30) \times 2 \times 0.20 = 6.80$ m^2

grand total

type - A (plane formworks)

$A = 431.289$ m^2

type - E (rough finish formworks)

$A = 37.44$ m^2

§ 4. EARTH WORKS

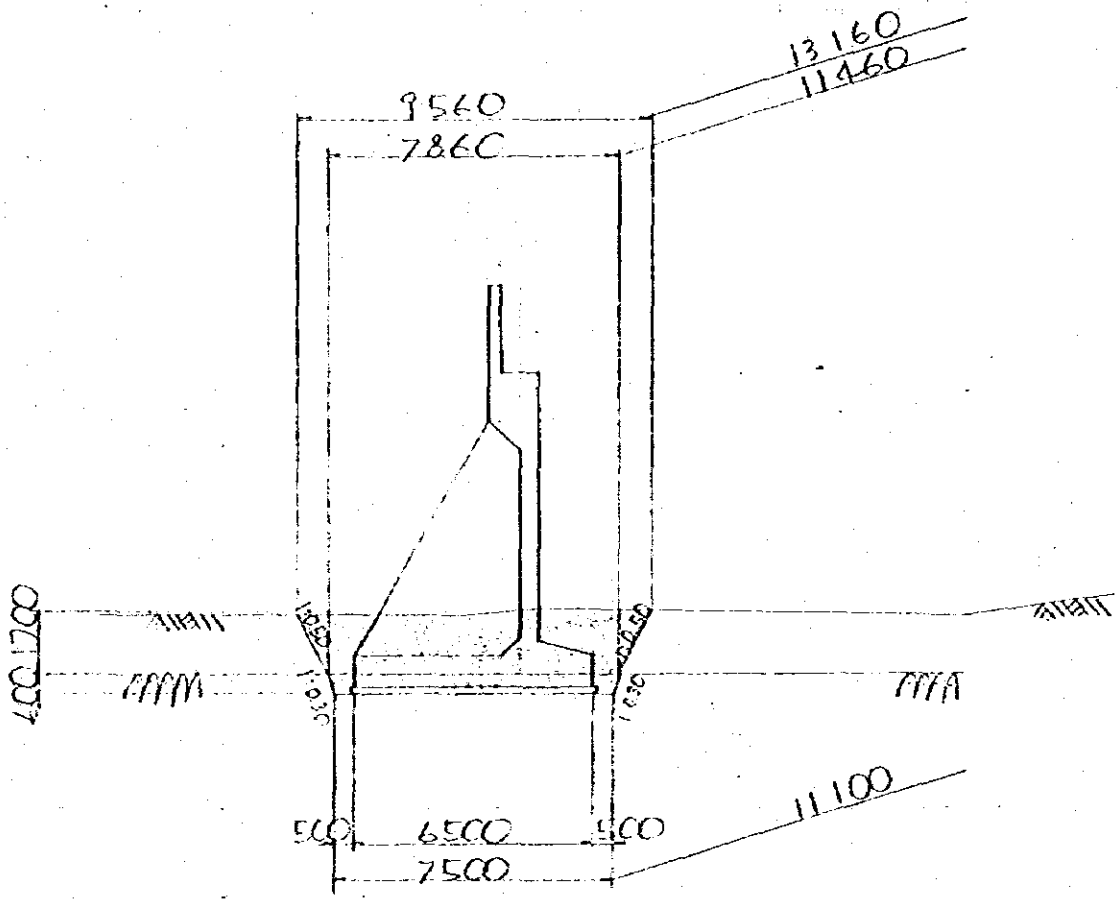

D.L 30.00

D.L 30.00

(1) EXCAVATION

common

$\frac{1}{6} \times 1.70 \times \{9.56 \times 13.16 + (9.56 + 7.86)$
$(13.16 + 11.46) + 7.86 \times 11.46\}$ = 182.684 m^3

rock

$\frac{1}{6} \times 0.60 \times \{7.86 \times 11.46 + (7.86 + 7.50)$
$(11.46 + 11.10) + 7.50 \times 11.10\}$ = 51.985 m^3

$\sum V$ = 234.669 m^3

wall

$0.50 \times 1.20 \times 10.10$ = 6.06

buttress

$\frac{1}{2} \times (3.798 + 4.50) \times 1.20 \times 0.60 \times 3$ = 8.962

$1.20 \times 4.50 \times 0.60$ = 3.24

$\frac{1}{2} \times 0.40 \times 0.40 \times 0.60 \times 4$ = − 0.192

haunch

$\frac{1}{2} \times 0.30 \times 0.30 \times 1.35 \times 6$ = 0.365

= 1.188

footing = 62.916

blinding concrete = 13.802

ΣV = 96.341 m^3

(2) BACKFILL

234.669 - 96.341 = 138.328 m^3

A2. - ABUTMENT

§ 1 STRUCTURAL FIGURE

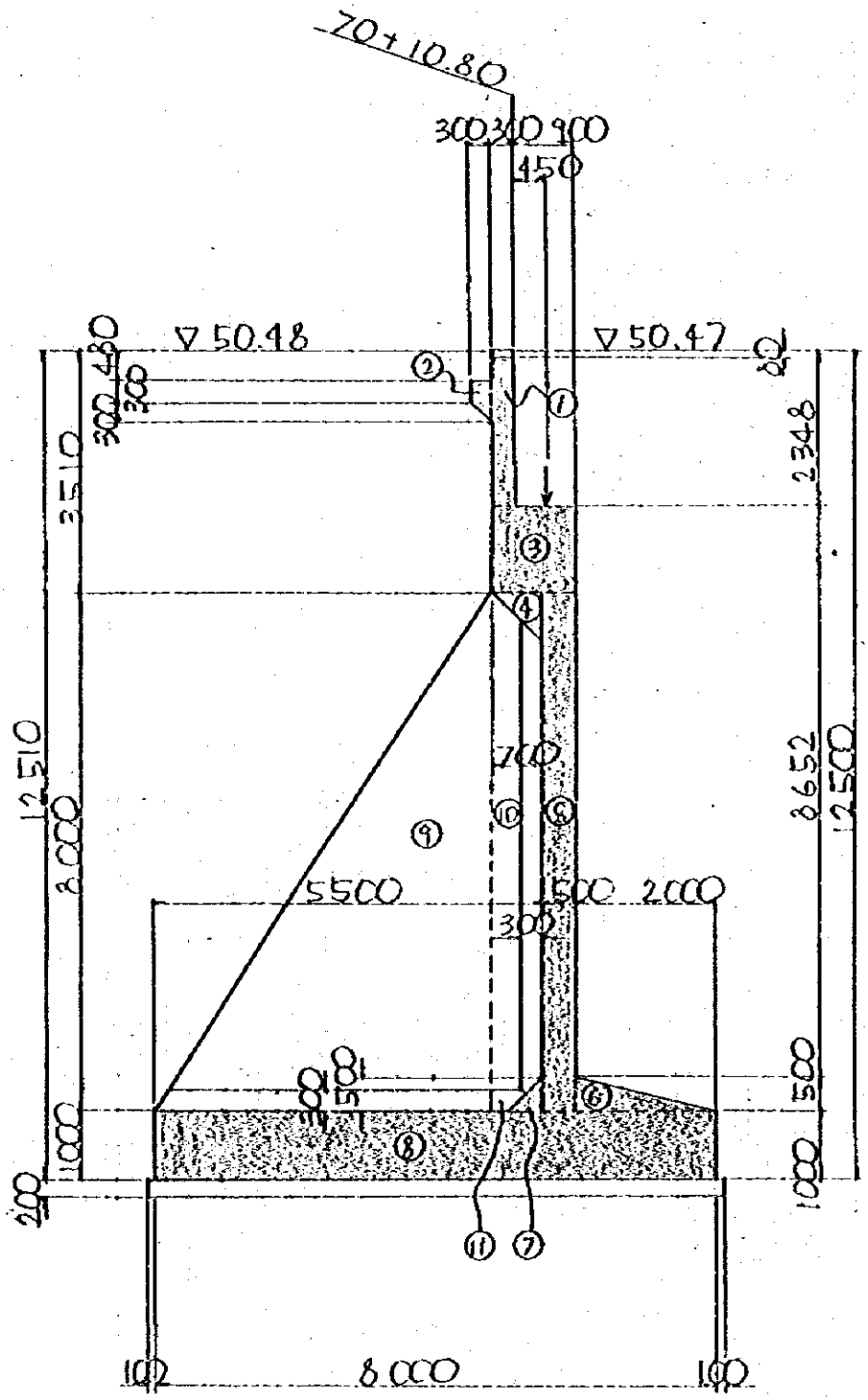

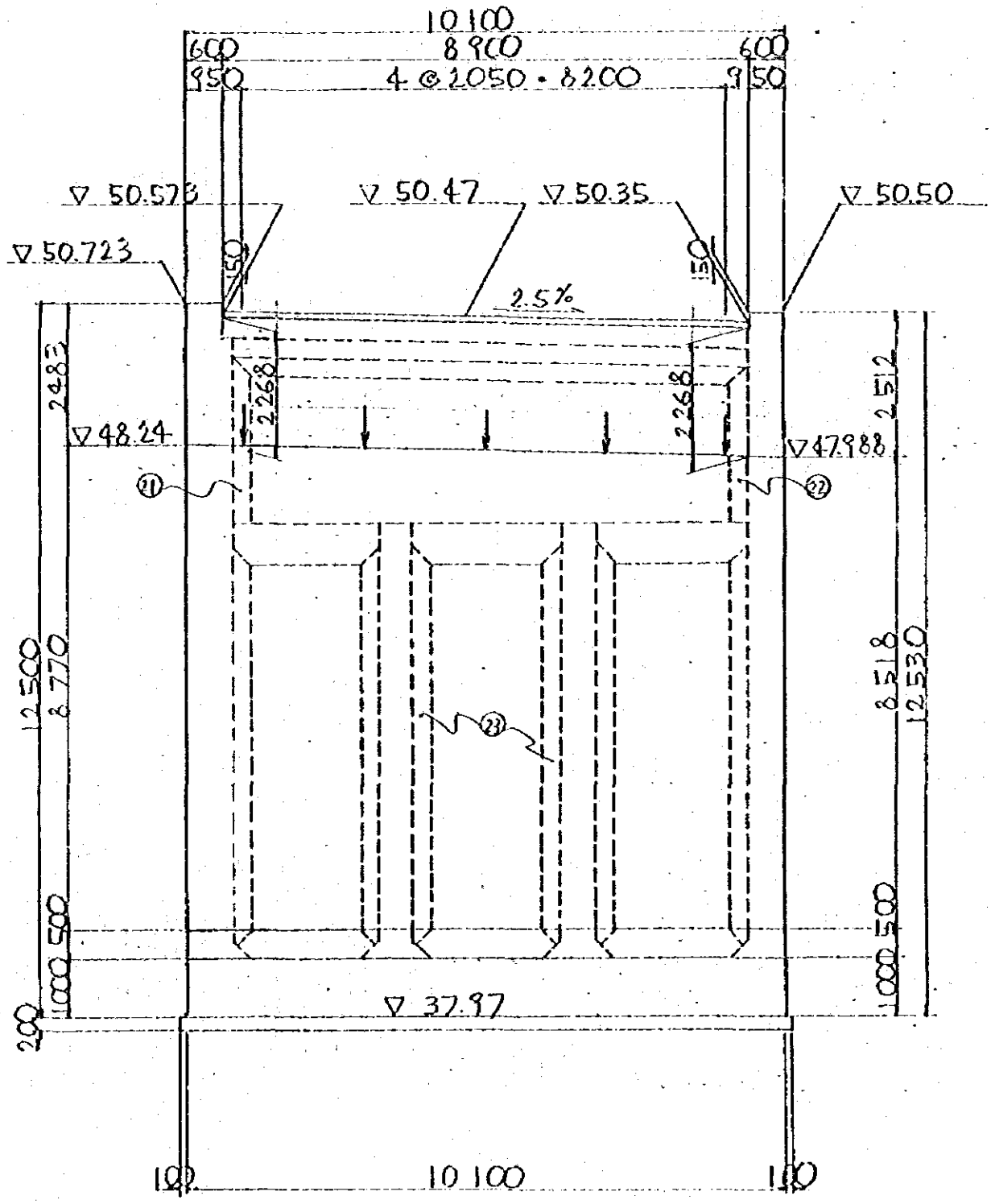
10 100
600
8 900
600
950
4 @ 2050 = 8200
950
▽ 50.573
▽ 50.47
▽ 50.35
▽ 50.50
▽ 50.723
150
150
2.5%
2483
2268
2268
2512
▽ 48.24
▽ 47.988
21
22
23
12 500
8 770
8 518
12 530
1000
500
1000
500
200
▽ 37.97
100
10 100
100

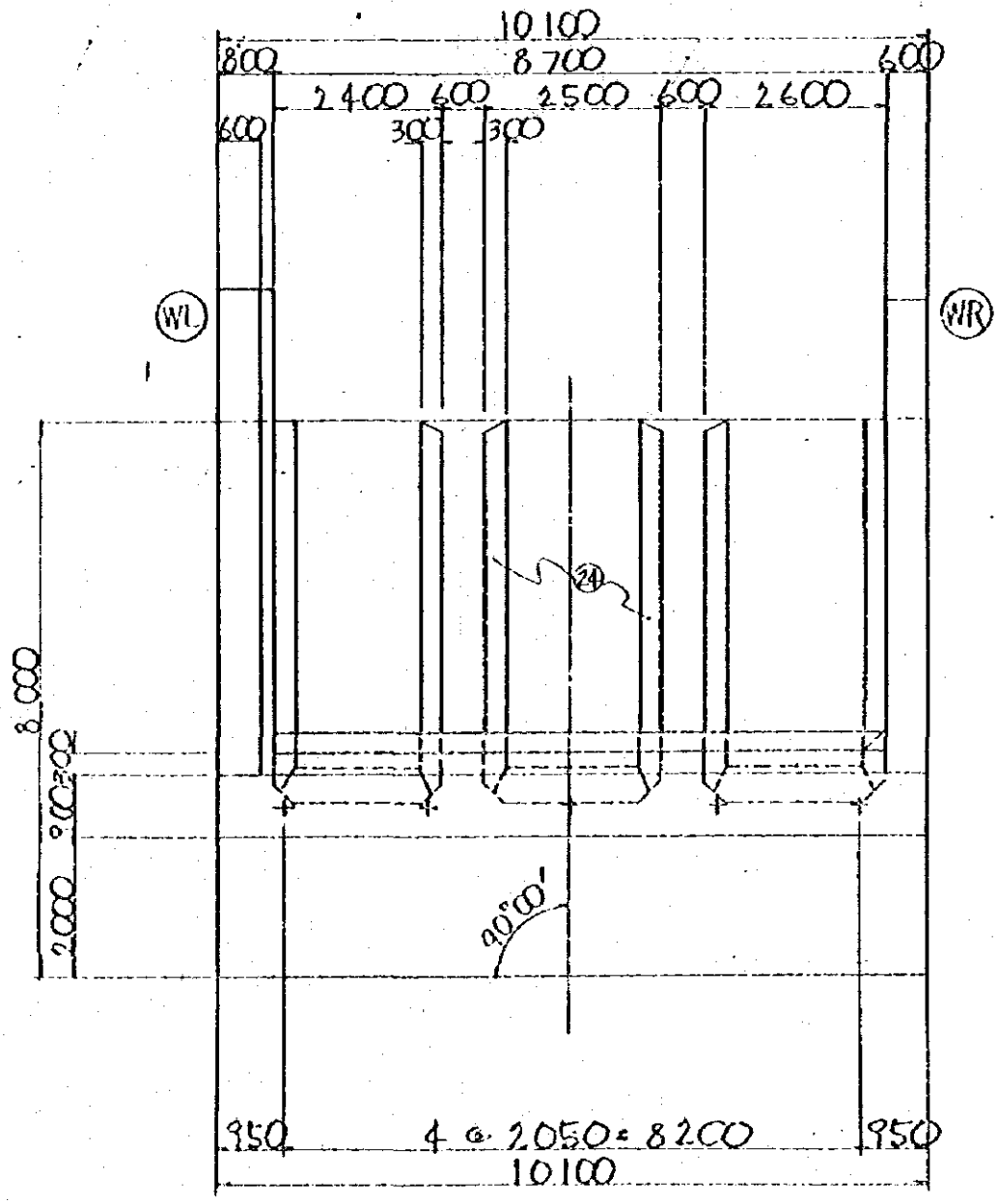
10100
800
8700
600
2400
600
2500
600
2600
600
300
300
WL
WR
24
8000
2000
2000
90°00'
950
4 @ 2050 = 8200
950
10100

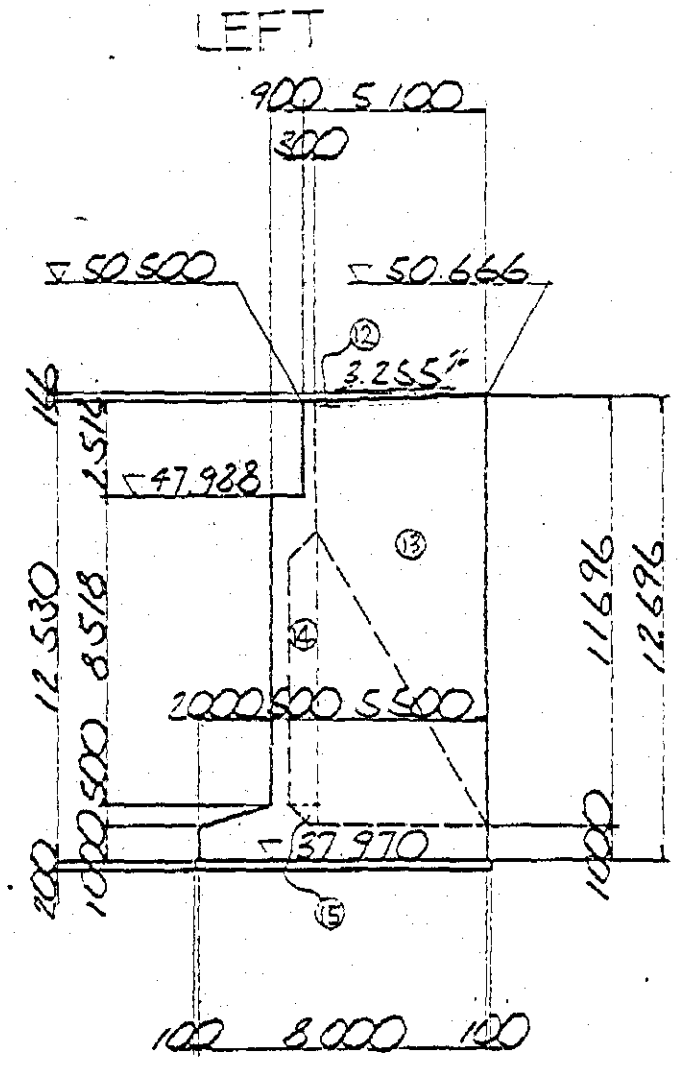
LEFT
900 5100
300
50.500
50.666
12
3.255%
156
2.514
47.988
13
14
12.530
8.516
11.696
12.696
2000 500 5500
500
1000
37.970
15
200
1000
100 8000 100
(t = 800)

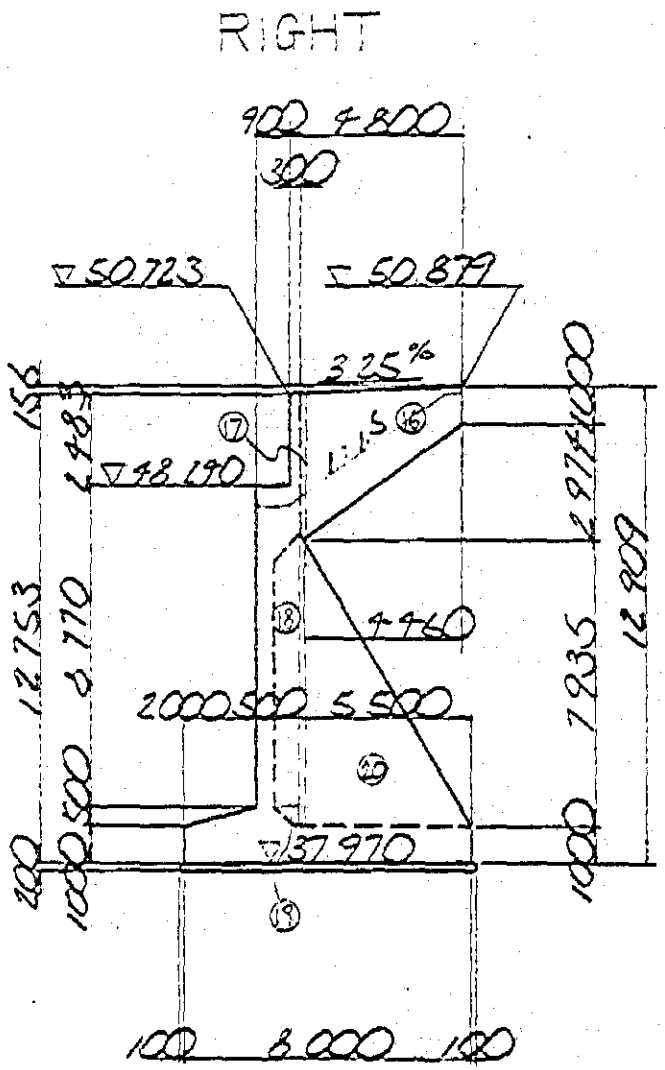
RIGHT
900 4800
300
50.723
50.879
3.25%
156
17
16
48.190
12.753
8.770
18
4.460
2000 500 5500
500
1000
37.970
19
200
1000
100 8000 100
(t = 600)

§ 2. concrete volume

Parapet

① $\frac{1}{2} \times (2.483 + 2.498) \times 0.60 \times 0.30 = 0.448$

$2.268 \times 8.90 \times 0.30 = 6.056$

$\frac{1}{2} \times (2.498 + 2.512) \times 0.60 \times 0.30 = 0.451$

② $\frac{1}{2} \times (0.30 + 0.60) \times 0.30 \times 8.70 = 1.175$

wall

③ $\frac{1}{2} \times (1.27 + 1.018) \times 10.10 \times 1.20 = 13.865$

④ $\frac{1}{2} \times 0.70 \times 0.70 \times 10.10 = 2.475$

⑤ $0.50 \times 8.00 \times 10.10 = 40.40$

footing

⑥ $\frac{1}{2} \times 2.00 \times 0.50 \times 10.10 = 5.05$

⑦ $\frac{1}{2} \times 0.50 \times 0.50 \times 10.10 = 1.263$

⑧ $8.00 \times 1.00 \times 10.10 = 80.80$

buttress

⑨ $\frac{1}{2} \times 8.00 \times 4.80 \times 0.60 \times 2 = 23.04$

⑩ $\frac{1}{2} \times (7.50 + 6.80) \times 0.70 \times 0.60 \times 2 = 6.006$

⑪ $\frac{1}{2} \times (0.20 + 0.70) \times 0.50 \times 0.60 \times 2 = 0.27$

wing (left)

⑫ 4.80 × 0.63 × 0.60 = 1.814

⑬ ½ × (11.066 + 10.911) × 4.80 × 0.80 = 42.196

⑭ ½ × (7.50 + 6.80) × 0.70 × 0.80 = 4.004

⑮ ½ × (0.20 + 0.70) × 0.50 × 0.80 = 0.180

wing (right)

⑯ ½ × (1.00 + 3.829) × 4.46 × 0.60 = 6.461

⑰ ½ × (11.764 + 11.763) × 0.04 × 0.60 = 0.282

⑱ ½ × (7.50 + 6.80) × 0.70 × 0.60 = 3.003

⑲ ½ × (0.20 + 0.70) × 0.50 × 0.60 = 0.135

⑳ ½ × 7.935 × 476 × 0.60 = 11.331

haunch

㉑ ½ × 0.30 × 0.30 × 2.538 = 0.114

㉒ ½ × 0.30 × 0.30 × 2.286 = 0.103

㉓ ½ × 0.30 × 0.30 × 7.10 × 6 = 1.917

㉔ ½ × 0.30 × 0.30 × 5.30 × 6 = 1.431

ΣV = 254.27 m^3

grand total

V = 254.27 m^3

blinding concrete

8.20 × 10.30 × 0.20 = 16.892 m^3

§ 3 form area

palapet

① $\frac{1}{2} \times (2.483 + 2.498) \times 0.60$ = 1.494

2.268×8.90 = 20.185

2.268×8.70 = 19.732

$-0.60 \times 8.70 + 0.30 \times 1.268 \times 2$ = − 5.981

$\frac{1}{2} \times (2.498 + 2.512) \times 0.60$ = 1.503

$0.30 \times (2.483 + 2.512)$ = 1.499

$0.23 \times 0.30 \times 2$ = 0.138

② 0.30×8.70 = 2.61

$0.30 \times \sqrt{2} \times 8.70$ = 3.691

wall

③ $\frac{1}{2} \times (1.27 + 1.018) \times 10.10$ = 11.554

$\frac{1}{2} \times (1.243 + 1.04) \times 8.10$ = 9.246

$1.20 \times (1.27 + 1.018)$ = 2.746

④ $0.40 \times \sqrt{2} \times (2.40 + 2.50 + 2.60)$ = 4.243

$0.30 \times \sqrt{2} \times \frac{1}{2} \times (7.50 + 5.70)$ = 2.80

$\frac{1}{2} \times 0.70 \times 0.70 \times 2$ = 0.49

⑤ 8.00×10.10 = 80.80

$6.80 \times (1.80 + 1.90 + 2.00)$ = 38.76

$0.50 \times 8.00 \times 2 = 8.00$

footing

⑥ $\frac{1}{2} \times 2.00 \times 0.50 \times 2 = 1.00$

⑦ $\frac{1}{2} \times 0.50 \times 0.50 \times 2 = 0.25$

⑧ $(8.00 + 10.10) \times 2 \times 1.00 = 36.20$

buttress

⑨ $\frac{1}{2} \times 7.70 \times 4.62 \times 2 \times 2 = 71.149$

$\sqrt{4.80^2 + 8.00^2} \times 0.60 \times 2 = 11.195$

⑩ $\frac{1}{2} \times (7.70 + 7.30) \times 0.40 \times 2 \times 2 = 12.00$

wing (left)

⑫ $(4.80 \times 2 + 0.60) \times 0.63 = 6.426$

⑬ $\frac{1}{2} \times (11.066 + 10.911) \times 4.80 \times 2 = 105.49$

$-0.30 \times (4.80 + 3.538) = -2.501$

$0.80 \times 11.066 = 8.853$

⑭ $\frac{1}{2} \times (7.50 + 6.80) \times 0.70 = 5.005$

$\frac{1}{2} \times (7.70 + 7.30) \times 0.40 = 3.00$

⑮ $\frac{1}{2} \times (0.20 + 0.70) \times 0.50 = 0.225$

wing (right)

⑯ $\frac{1}{2} \times (1.00 + 3.829) \times 4.46 \times 2 = 21.537$

$(1.00 + \sqrt{2.974^2 + 4.46^2}) \times 0.60 = 3.816$

⑰ $\frac{1}{2} \times (11.764 + 11.763) \times 0.04 \times 2 = 0.941$

$-0.30 \times (0.30 + 2.886) = -0.956$

⑱ $\frac{1}{2} \times (7.50 + 6.80) \times 0.70 = 5.005$

$\frac{1}{2} \times (7.70 + 7.30) \times 0.40 = 3.00$

⑲ $\frac{1}{2} \times (0.20 + 0.70) \times 0.50 = 0.225$

⑳ $\frac{1}{2} \times 7.935 \times 4.76 = 18.885$

$\frac{1}{2} \times 7.635 \times 4.58 = 17.484$

$\sqrt{4.76^2 + 7.935^2} \times 0.60 = 5.552$

haunch

(21)	$0.30 \times \sqrt{2} \times 2.538$	=	1.077
(22)	$0.30 \times \sqrt{2} \times 2.286$	=	0.97
(23)	$0.30 \times \sqrt{2} \times 7.10 \times 6$	=	18.074
(24)	$0.30 \times \sqrt{2} \times 5.30 \times 6$	=	13.492
	$\frac{1}{2} \times 0.30 \times 0.30 \times 2$	=	0.09
	$\frac{1}{2} \times 0.30 \times 0.35 \times 4$	=	0.21
	ΣA	=	$571.204\ m^2$

blinding concrete form area

$(8.20 + 10.30) \times 2 \times 0.20 = 7.40\ m^2$

grand total

type - A (plane formworks)

$A = 533.754\ m^2$

type - E (rough finish formworks)

$A = 44.85\ m^2$

§ 4. EARTH WORKS

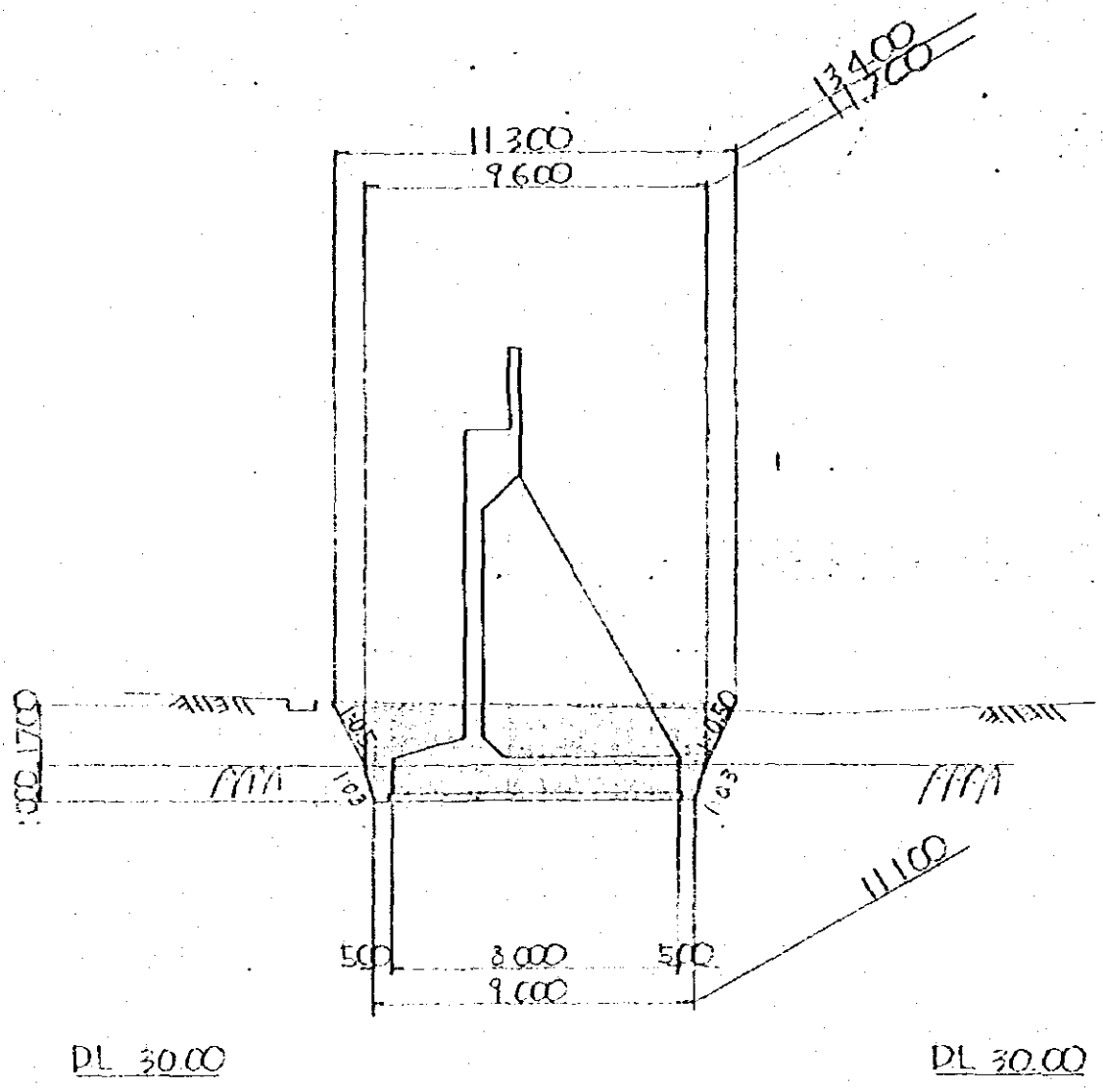

(1) EXCAVATION

common

$\frac{1}{6} \times 1.70 \times [11.30 \times 13.40 + (11.30 + 9.60)$
$(13.40 + 11.70) + 9.60 \times 11.70]$ = 223.36 m^3

rock

$\frac{1}{6} \times 1.00 \times [9.60 \times 11.70 + (9.60 + 9.00)$
$(11.70 + 11.10) + 9.00 \times 11.10]$ = 106.05 m^3

ΣV = 329.41 m^3

wall

$0.50 \times 1.50 \times 10.10$ = 7.575

buttress

$\frac{1}{2} \times (4.60 + 5.50) \times 1.50 \times 0.60 \times 3$ = 13.635

$5.50 \times 1.50 \times 0.80$ = 6.60

$-\frac{1}{2} \times 0.50 \times 0.50 \times (0.60 \times 3 + 0.80)$ = − 0.325

haunch

$\frac{1}{2} \times 0.30 \times 0.30 \times 1.30 \times 6$ = 0.351

= 1.431

footing

= 87.113

blinding concrete

= 16.892

ΣV = 133.272 m^3

(2) BACKFILL

329.41 − 133.272 = 196.138 m^3

§§ 3 A-LINE-2 B.R

Ai. - ABUTMENT

§ 1 STRUCTURAL FIGURE

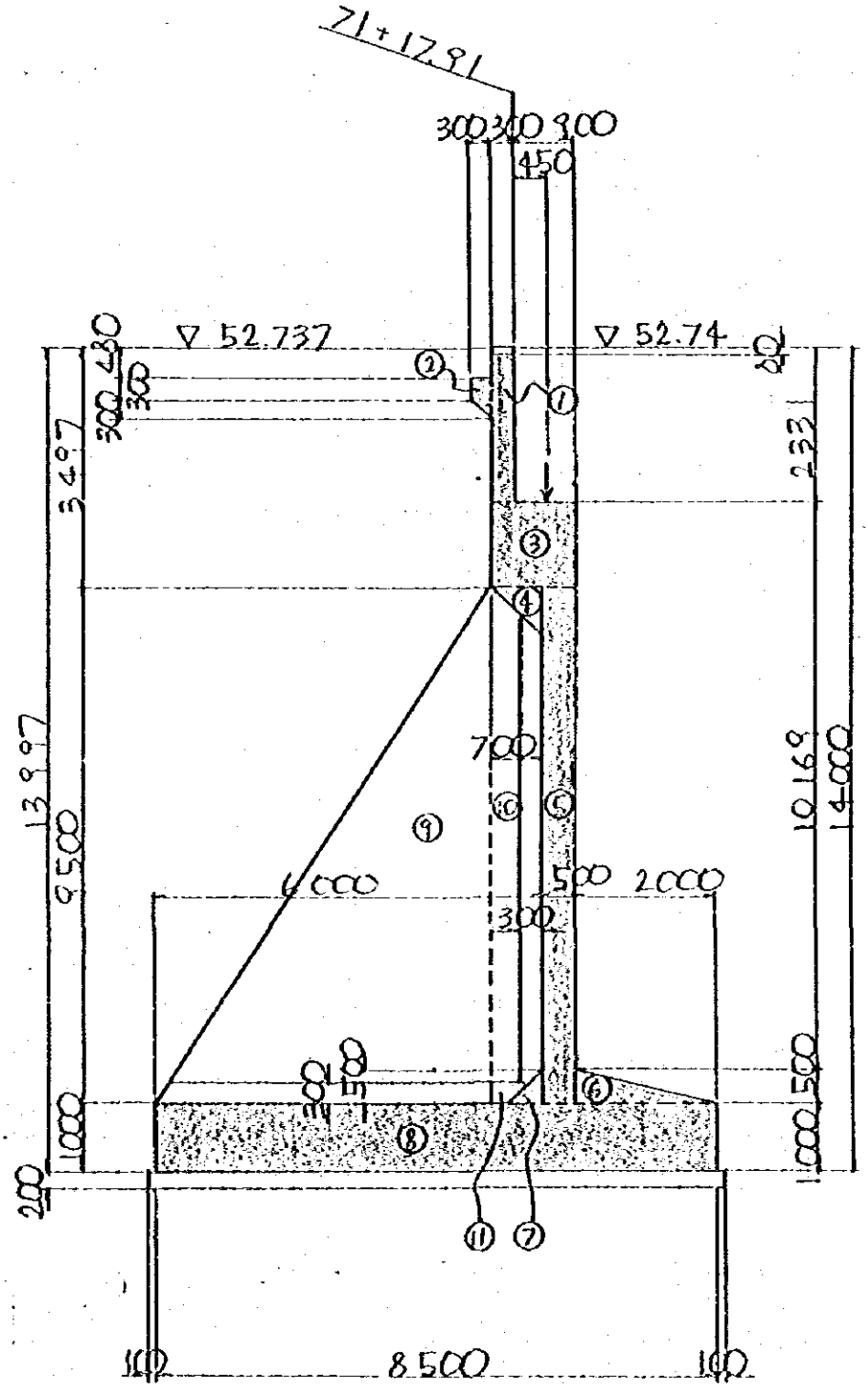

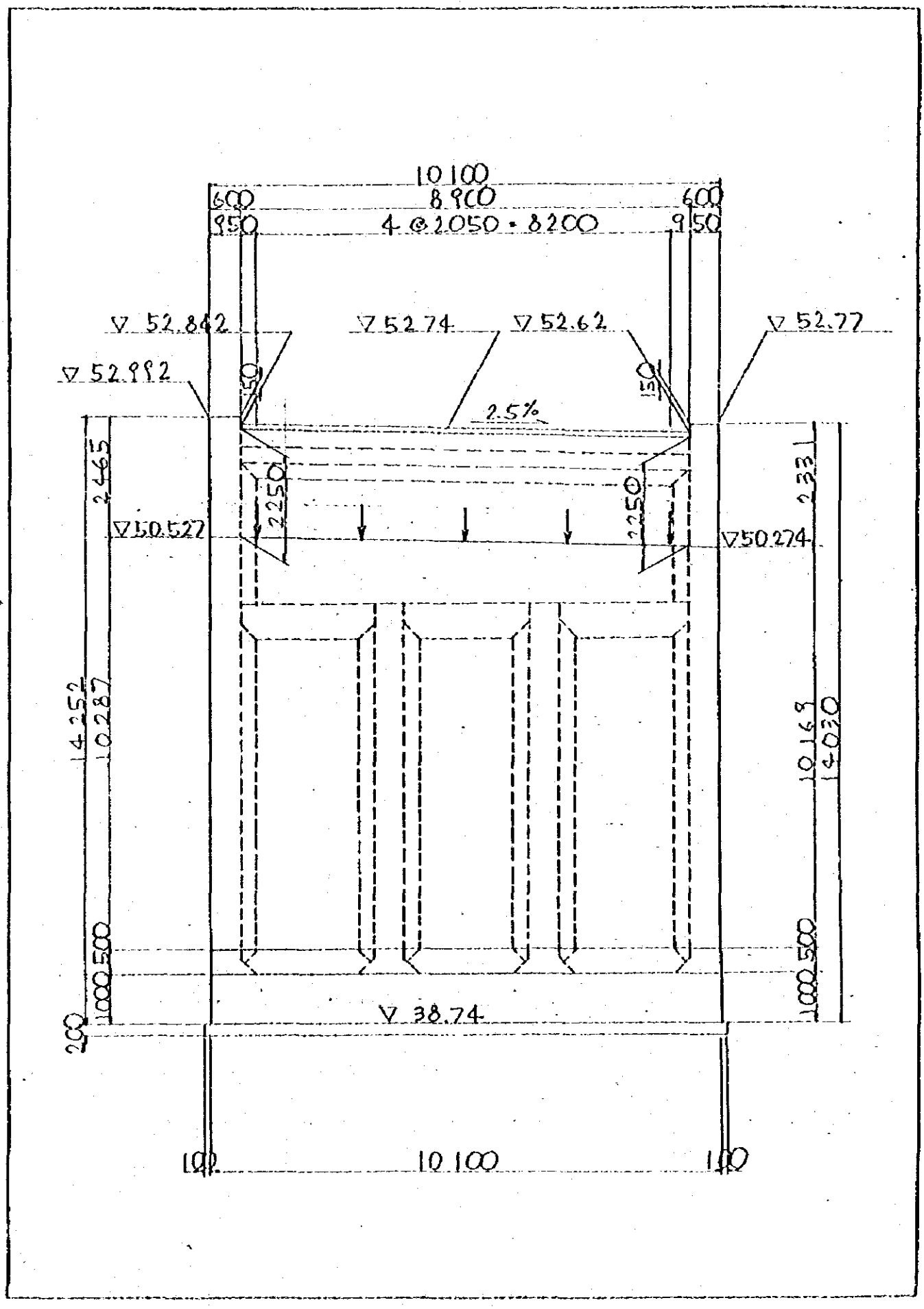
10100
600
8900
600
950
4 @ 2050 = 8200
950
▽ 52.842
▽ 52.74
▽ 52.62
▽ 52.77
▽ 52.992
150
150
2.5%
2465
2250
2250
2331
▽50.522
▽50.274
14252
10287
10169
14030
1000
500
1000
500
200
▽ 38.74
100
10100
100

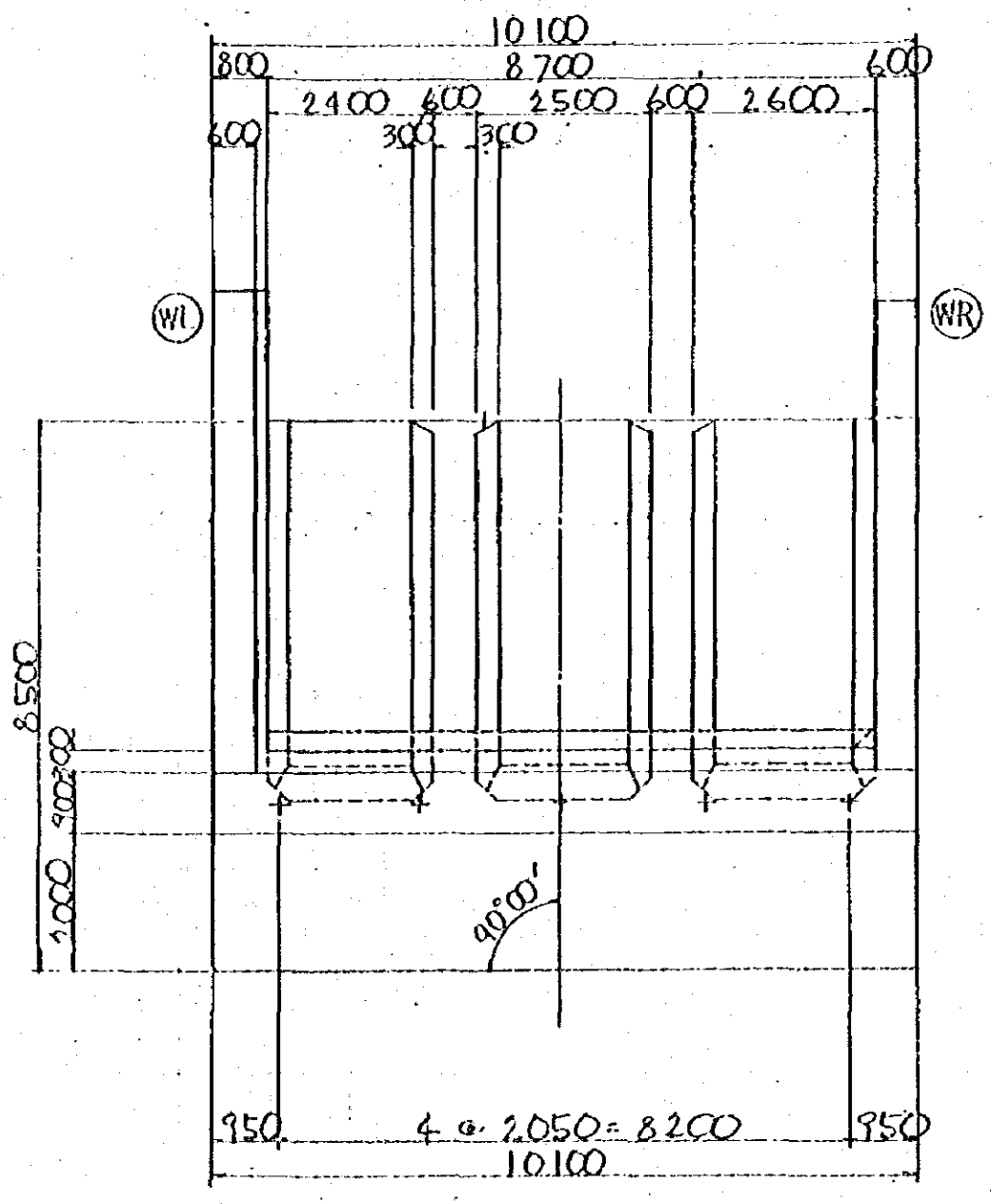
10100
800
8700
600
2400
600
2500
600
2600
600
300
300
WL
WR
8500
900
1000
90°00'
950
4 @ 2050 = 8200
950
10100

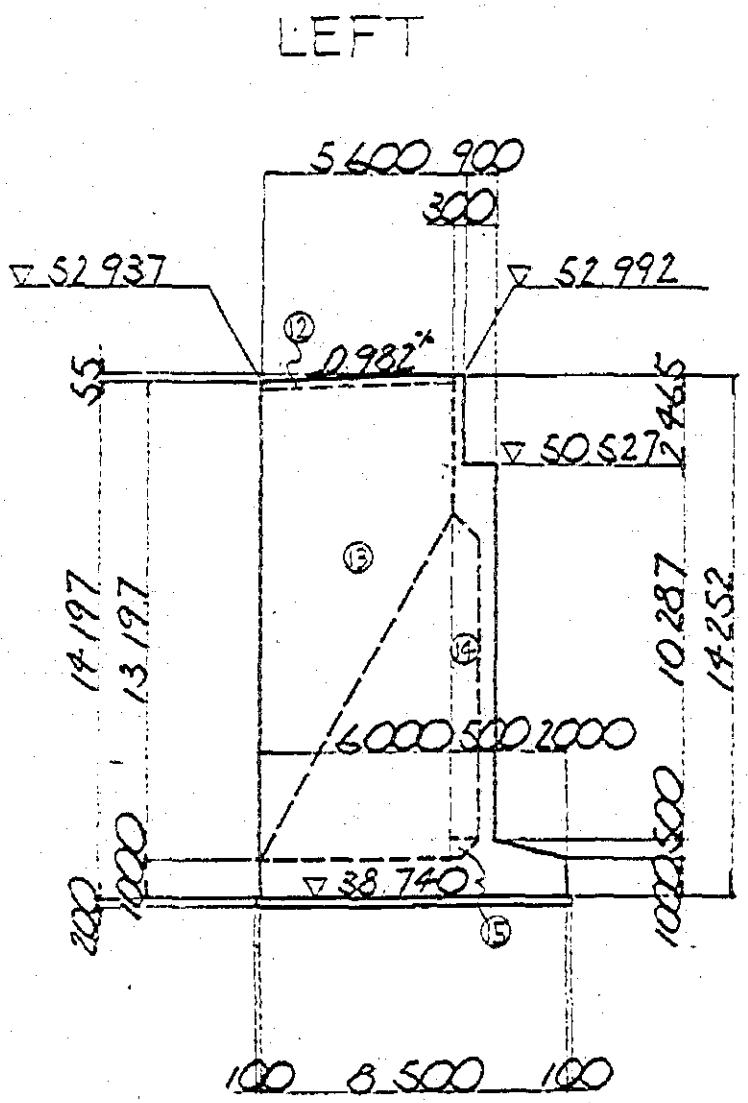
LEFT
5600 900
300
52.937
52.992
0.982%
55
50.527
2465
14197
13197
10287
14252
6000 500 2000
1000
38.740
200
1000
1000
100 8500 100

(t = 800)

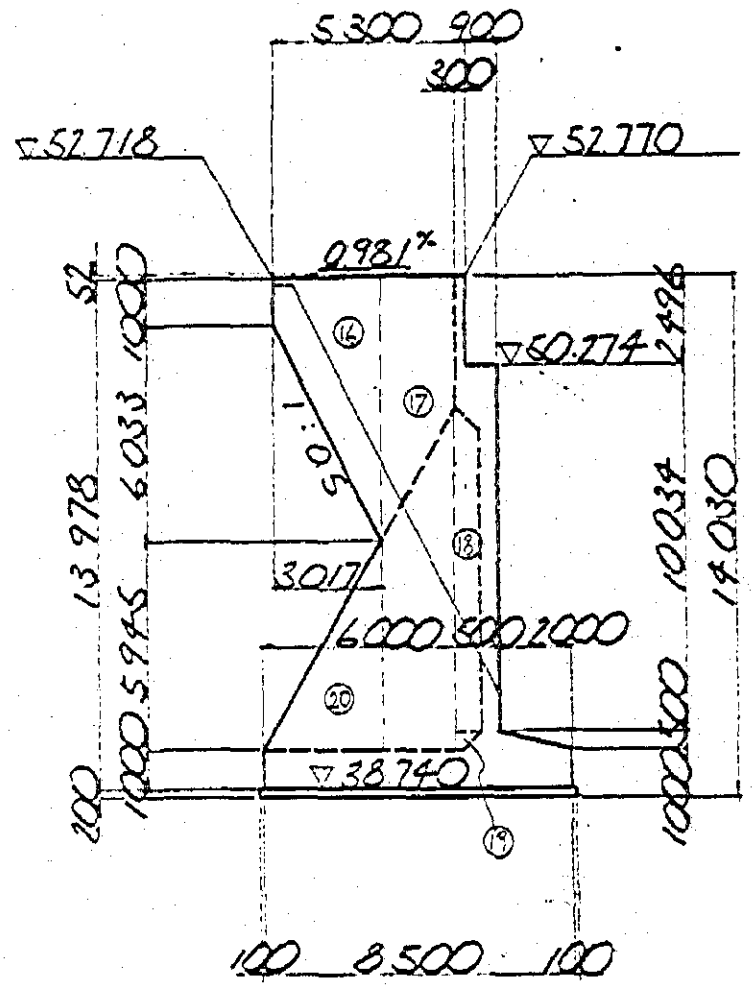
RIGHT
5300 900
300
52.718
52.770
0.981%
52
50.274
2496
6033
13978
50:1
3017
6000 500 2000
5945
10034
14030
1000
38.740
200
1000
1000
100 8500 100

(t = 600)

§ 2 concrete volume

Parapet

① $\frac{1}{2} \times (2.465 + 2.48) \times 0.60 \times 0.30 = 0.445$

$2.25 \times 8.90 \times 0.30 = 6.008$

$\frac{1}{2} \times (2.48 + 2.331) \times 0.60 \times 0.30 = 0.433$

② $\frac{1}{2} \times (0.30 + 0.60) \times 0.30 \times 8.70 = 1.175$

wall

③ $\frac{1}{2} \times (1.287 + 1.034) \times 10.10 \times 1.20 = 14.065$

④ $\frac{1}{2} \times 0.70 \times 0.70 \times 10.10 = 2.475$

⑤ $0.50 \times 9.50 \times 10.10 = 47.975$

footing

⑥ $\frac{1}{2} \times 2.00 \times 0.50 \times 10.10 = 5.05$

⑦ $\frac{1}{2} \times 0.50 \times 0.50 \times 10.10 = 1.263$

⑧ $8.50 \times 1.00 \times 10.10 = 85.85$

buttress

⑨ $\frac{1}{2} \times 9.50 \times 5.30 \times 0.60 \times 2 = 30.21$

⑩ $\frac{1}{2} \times (9.00 + 8.30) \times 0.70 \times 0.60 \times 2 = 7.266$

⑪ $\frac{1}{2} \times (0.20 + 0.70) \times 0.50 \times 0.60 \times 2 = 0.27$

wing (left)

⑫ 5.30 × 0.63 × 0.60 = 0.731

⑬ ½ × (12.567 + 12.619) × 5.30 × 0.80 = 53.394

⑭ ½ × (9.00 + 8.30) × 0.70 × 0.80 = 4.844

⑮ ½ × (0.20 + 0.70) × 0.50 × 0.80 = 0.18

wing (right)

⑯ ½ × (1.00 + 7.063) × 3.017 × 0.60 = 7.298

⑰ ½ × (13.008 + 13.027) × 1.983 × 0.60 = 15.488

⑱ ½ × (9.00 + 8.30) × 0.70 × 0.60 = 3.633

⑲ ½ × (0.20 + 0.70) × 0.50 × 0.60 = 0.135

⑳ ½ × 5.945 × 3.317 × 0.60 = 5.916

haunch

㉑ ½ × 0.30 × 0.30 × 2.537 = 0.114

㉒ ½ × 0.30 × 0.30 × 2.284 = 0.103

㉓ ½ × 0.30 × 0.30 × 8.60 × 6 = 2.322

㉔ ½ × 0.30 × 0.30 × 5.80 × 6 = 1.566

ΣV = 299.481 m^3

grand total

V = 299.481 m^3

blinding concrete

8.70 × 10.30 × 0.20 = 17.922 m^3

§ 3 form area

palapet

① $\frac{1}{2} \times (2.465 + 2.48) \times 0.60$ = 1.484

2.25×8.90 = 20.025

2.25×8.70 = 19.575

$-0.60 \times 8.70 + 0.30 \times 1.25 \times 2$ = − 5.97

$\frac{1}{2} \times (2.48 + 2.331) \times 0.60$ = 1.443

$0.30 \times (2.465 + 2.331)$ = 1.439

$0.23 \times 0.30 \times 2$ = 0.138

② 0.30×8.70 = 2.61

$0.30 \times \sqrt{2} \times 8.70$ = 3.691

wall

③ $\frac{1}{2} \times (1.287 + 1.034) \times 10.10$ = 11.721

$\frac{1}{2} \times (1.260 + 1.057) \times 8.70$ = 10.079

$1.20 \times (1.287 + 1.034)$ = 2.785

④ $0.40 \times \sqrt{2} \times (2.40 + 2.50 + 2.60)$ = 4.243

$0.30 \times \sqrt{2} \times \frac{1}{2} \times (7.50 + 5.70)$ = 2.80

$\frac{1}{2} \times 0.70 \times 0.70 \times 2$ = 0.49

⑤ 9.50×10.10 = 95.95

$8.30 \times (1.80 + 1.90 + 2.00)$ = 47.31

$0.50 \times 9.50 \times 2 = 9.50$

footing

⑥ $\frac{1}{2} \times 2.00 \times 0.50 \times 2 = 1.00$

⑦ $\frac{1}{2} \times 0.50 \times 0.50 \times 2 = 0.25$

⑧ $(8.50 + 10.10) \times 2 \times 1.00 = 37.20$

buttress

⑨ $\frac{1}{2} \times 9.20 \times 5.133 \times 2 \times 2 = 94.447$

$\sqrt{9.50^2 + 5.30^2} \times 0.60 \times 2 = 13.054$

⑩ $\frac{1}{2} \times (9.20 + 8.80) \times 0.40 \times 2 \times 2 = 14.40$

wing (left)

⑫ $(5.30 \times 2 + 0.60) \times 0.63 = 7.056$

⑬ $\frac{1}{2} \times (12.567 + 12.619) \times 5.30 \times 2 = 133.486$

$-0.30 \times (5.30 + 3.137) = -2.531$

$0.80 \times 12.567 = 10.054$

⑭ $\frac{1}{2} \times (9.00 + 8.30) \times 0.70 = 6.055$

$\frac{1}{2} \times (9.20 + 8.80) \times 0.40 = 3.60$

⑮ $\frac{1}{2} \times (0.20 + 0.70) \times 0.50 = 0.225$

wing (right)

⑯ $\frac{1}{2} \times (1.00 + 7.063) \times 3.017 \times 2 = 24.326$

$(1.00 + \sqrt{3.017^2 + 6.033^2}) \times 0.60 = 4.647$

⑰ $\frac{1}{2} \times (13.008 + 13.027) \times 1.983 \times 2 = 51.627$

$-0.30 \times (2.884 + 1.983) = -1.46$

⑱ $\frac{1}{2} \times (9.00 + 8.30) \times 0.70 = 6.055$

$\frac{1}{2} \times (9.20 + 8.80) \times 0.40 = 3.60$

⑲ $\frac{1}{2} \times (0.20 + 0.70) \times 0.50 = 0.225$

⑳ $\frac{1}{2} \times 5.945 \times 3.317 = 9.86$

$\frac{1}{2} \times 5.645 \times 3.15 = 8.891$

$\sqrt{5.945^2 + 3.317^2} \times 0.60 = 4.085$

haunch

(21)	$0.30 \times \sqrt{2} \times 2.537$	=	1.076
(22)	$0.30 \times \sqrt{2} \times 2.284$	=	0.969
(23)	$0.30 \times \sqrt{2} \times 8.60 \times 6$	=	21.892
(24)	$0.30 \times \sqrt{2} \times 5.80 \times 6$	=	14.764
	$\frac{1}{2} \times 0.30 \times 0.30$	=	0.045
	$\frac{1}{2} \times 0.30 \times 0.344 \times 5$	=	0.258
	ΣA	=	$698.469\ m^2$

blinding concrete form area

$(8.70 + 10.30) \times 2 \times 0.20 = 7.60\ m^2$

grand total

type - A (plane formworks)

$A = 660.019\ m^2$

type - E (rough finish formworks)

$A = 46.05\ m^2$

§ 4. EARTH WORKS

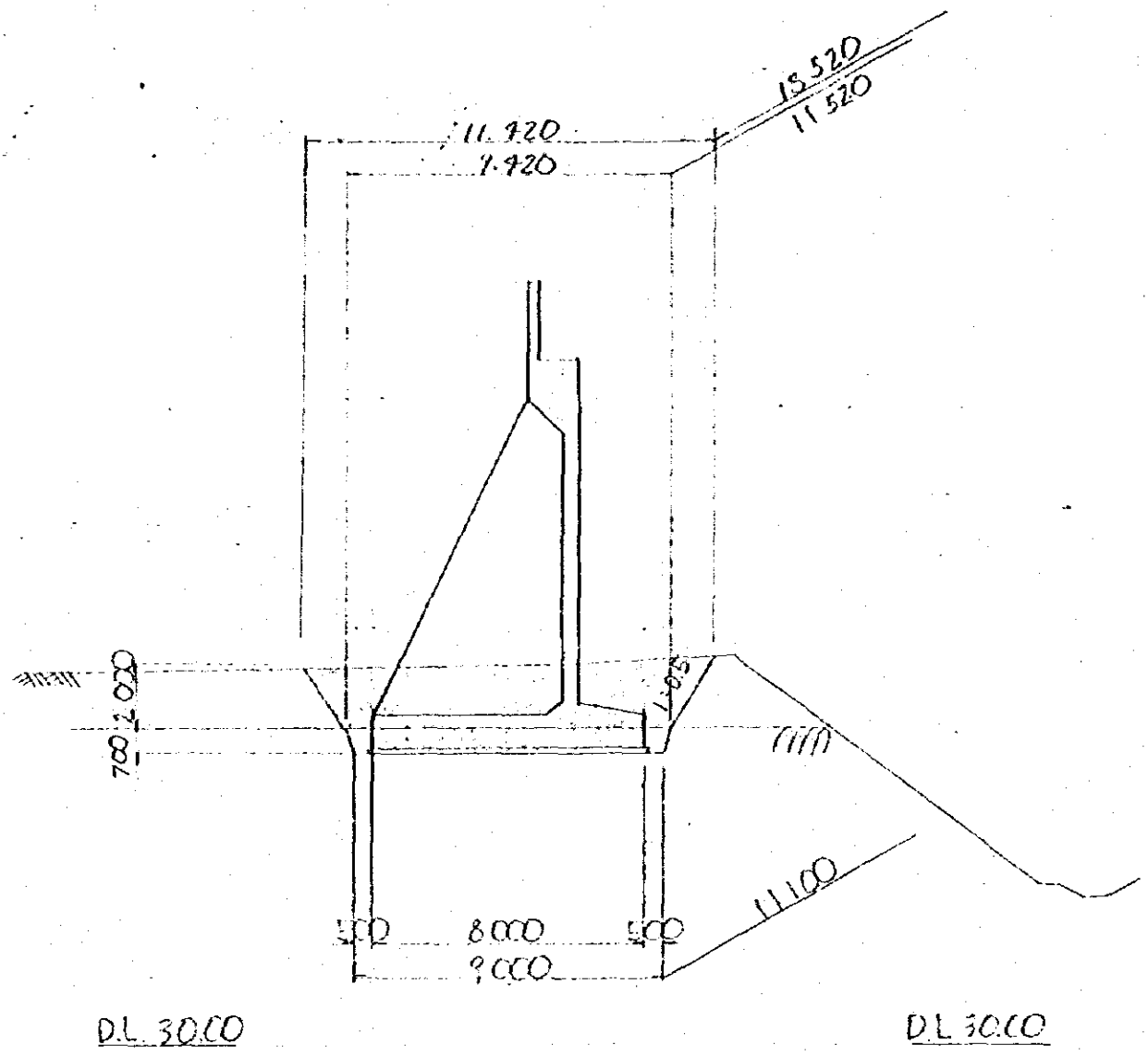

(1) EXCAVATION

common

$\frac{1}{6} \times 2.0 \cdot \{ 11.42 \times 13.52 + (11.42 + 9.42)$
$(13.52 + 11.52) + 9.42 \times 11.52 \} = 261.58 \ m^3$

rock $\frac{1}{6} \times 0.7 \times [9.42 \times 11.52 + (9.42 + 9.00)(11.52 + 11.10) + 9.00 \times 11.10] = 72.93 \ m^3$

wall

$0.50 \times 0.50 \times 10.10 = 2.525$

buttress

$\frac{1}{2} \times (5.721 + 6.00) \cdot 0.50 \cdot 0.60 \times 3 = 5.274$

$0.50 \times 6.00 \times 0.50 = 1.50$

$-\frac{1}{2} \times 0.50 \cdot 0.50 \cdot (0.60 \times 3 + 0.80) = -0.325$

haunch

$\frac{1}{2} \times 0.30 \times 0.30 \times 0.30 \times 6 = 0.081$

$= 1.566$

footing $= 92.163$

blinding concrete

$= 17.922$

$\Sigma V = 120.706 \ m^3$

(2) BACK FILL

$334.51 - 120.706 = 213.80 \ m^3$

P1 - PIER

§ 1 STRUCTURAL FIGURE

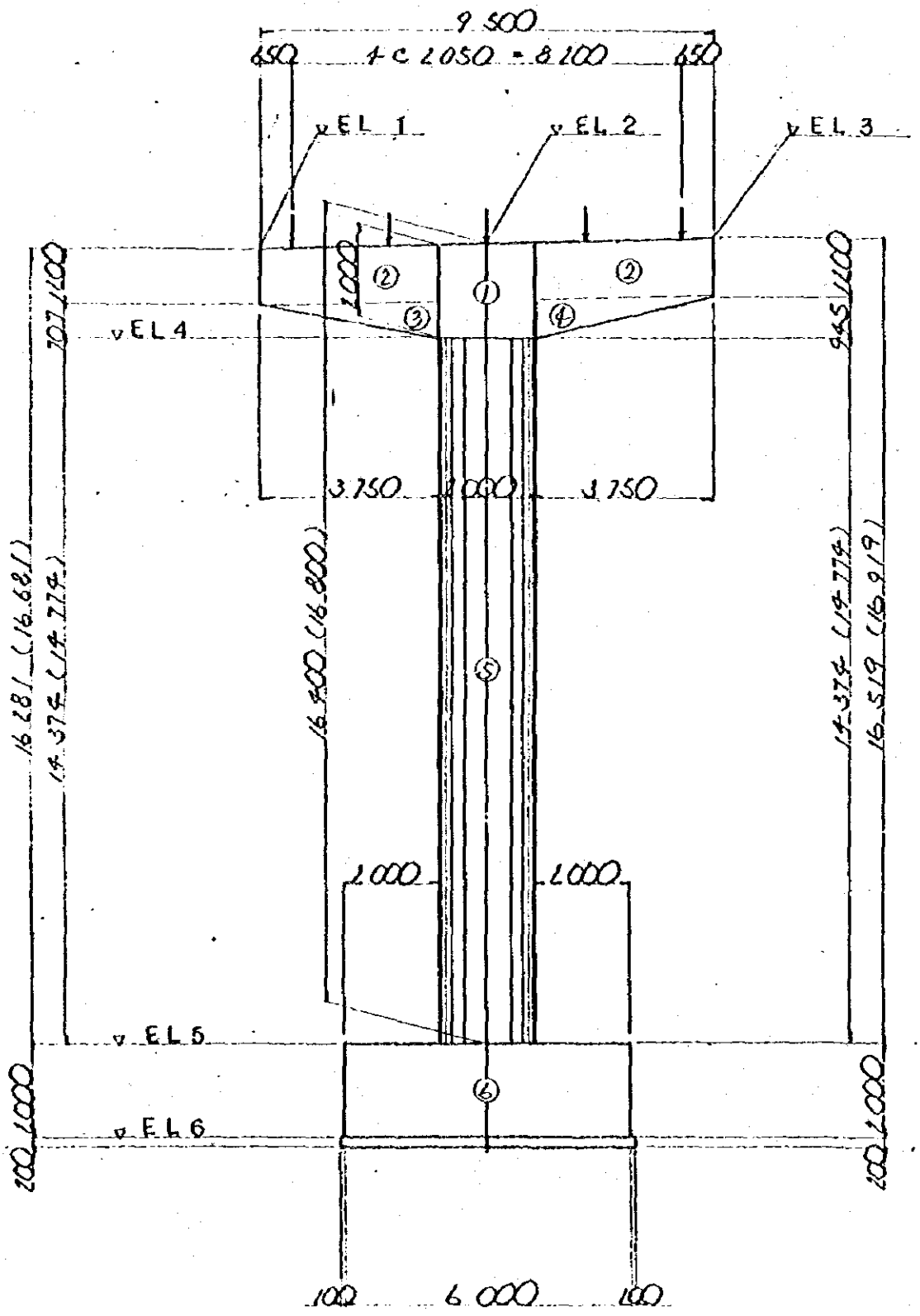

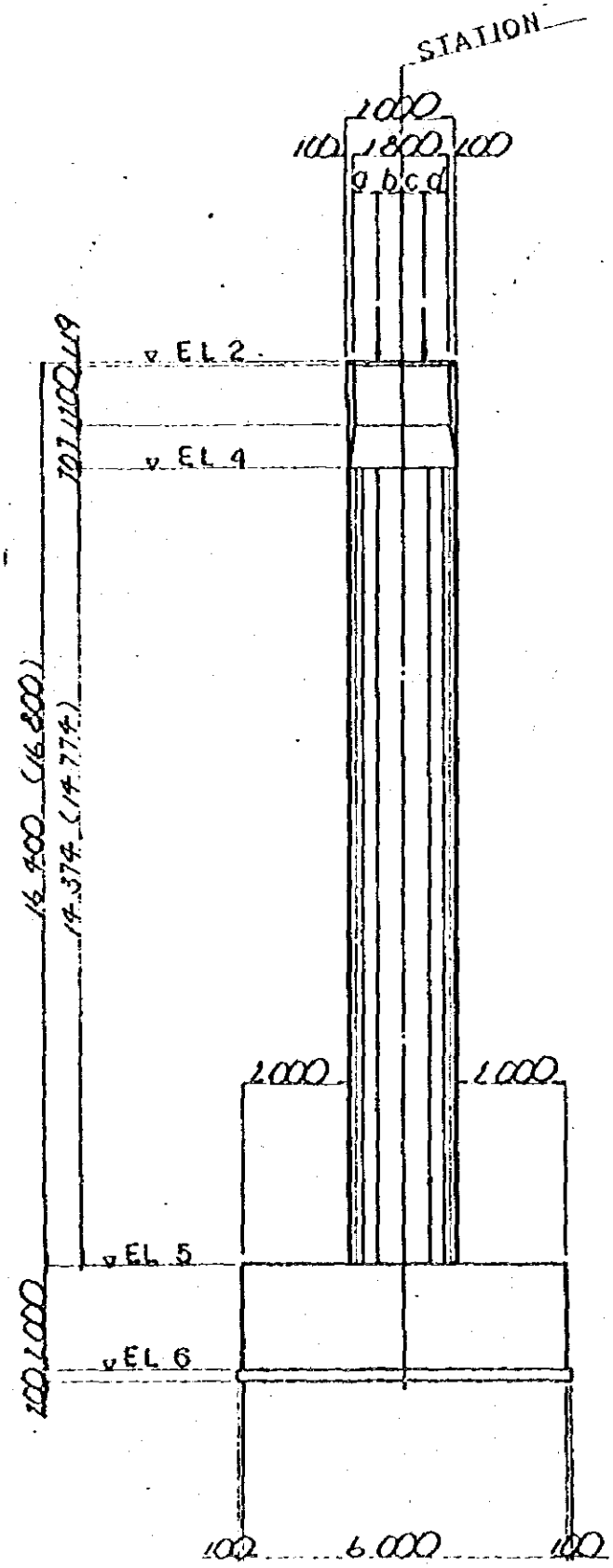
STATION
1000
100
1800
100
a b c d
EL 2
EL 4
EL 5
EL 6
1000
1000
100
6000
100

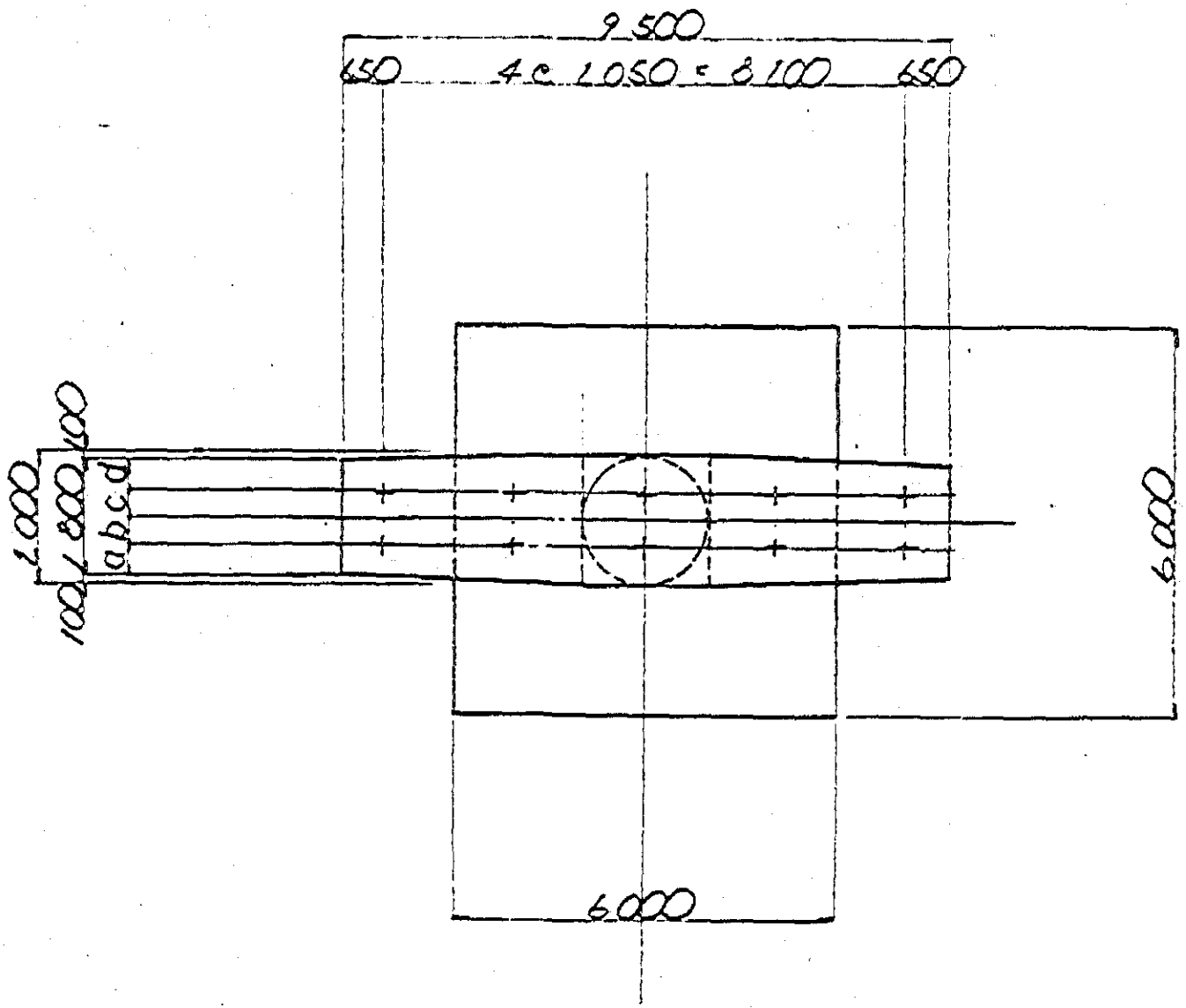

PLAN

	A-LINE-2		B-LINE-2	
	P 1	P 2	P 1	P 2
STA	71+51.985	71+79.535	71+43.481	71+73.501
P.H	52.926	52.888	54.026	54.074
EL 1	50.463	50.427	51.566	51.615
2	50.582	50.546	51.685	51.734
3	50.701	50.665	51.804	51.853
4	48.556	48.524	49.659	49.711
5	34.182	37.546	34.885	38.733
6	32.181	35.746	32.885	36.933
a	47S	42S	47S	40S
b	42S	37S	42S	39S
c	37S	37S	42S	40S
d	52S	42S	47S	39S

§ 2 concrete volume

beam.

① $\frac{1}{2} \times (2.00 + 2.05) \times 2.00 \times 2.00 = 8.10$

② $\frac{1}{2} \times (1.80 + 2.00) \times 3.75 \times 1.20 \times 2 = 17.10$

③ $\frac{1}{6} \times 0.80 \times 3.75 \times (2 \times 2.00 + 1.80) = 2.90$

④ $\frac{1}{6} \times 0.85 \times 3.75 \times (2 \times 2.00 + 1.80) = 3.081$

column

⑤ $\frac{1}{4} \times \pi \times 2.00^2 \times 14.374 = 45.157$

footing

⑥ $6.00 \times 2.00 \times 6.00 = 72.00$

$\Sigma V = 148.338\ m^3$

grand total

$V = 148.338\ m^3$

blinding concrete

$6.20 \times 6.20 \times 0.20 = 7.688\ m^3$

§ 3. form area

beam

① $\frac{1}{2} \times (2.00 + 2.05) \times 2.00 \times 2$ = 8.10

$2.00 \times 2.00 \times -\frac{\pi}{4} \times 2.00^2$ = 0.858

② $\sqrt{0.10^2 + 3.75^2} \times 1.20 \times 2 \times 2$ = 18.006

$1.80 \times 1.20 \times 2$ = 4.32

③ $\frac{1}{2} \times \sqrt{0.10^2 + 3.75^2} \times 0.80 \times 2$ = 3.001

$\frac{1}{2} \times (1.80 + 2.00) \times \sqrt{0.707^2 + 3.75^2}$ = 7.251

④ $\frac{1}{2} \times \sqrt{0.10^2 + 3.75^2} \times 0.85 \times 2$ = 3.189

$\frac{1}{2} \times (1.80 + 2.00) \times \sqrt{0.945 + 3.75^2}$ = 7.348

column

⑤ $\pi \times 2.00 \times 14.374$ = 90.315

footing

⑥ $6.00 \times 4 \times 2.00$ = 48.00

ΣA = 190.388 m^2

blinding concrete form area

$6.20 \times 4 \times 0.20$ = 4.96 m^2

grand total

type - A (plane formworks)

A = 52.073 m^2

type - B (curved formworks)

A = 90.315 m^2

type - E (rough finish formworks)

A = 52.96 m^2

§ 4. EARTH WORKS

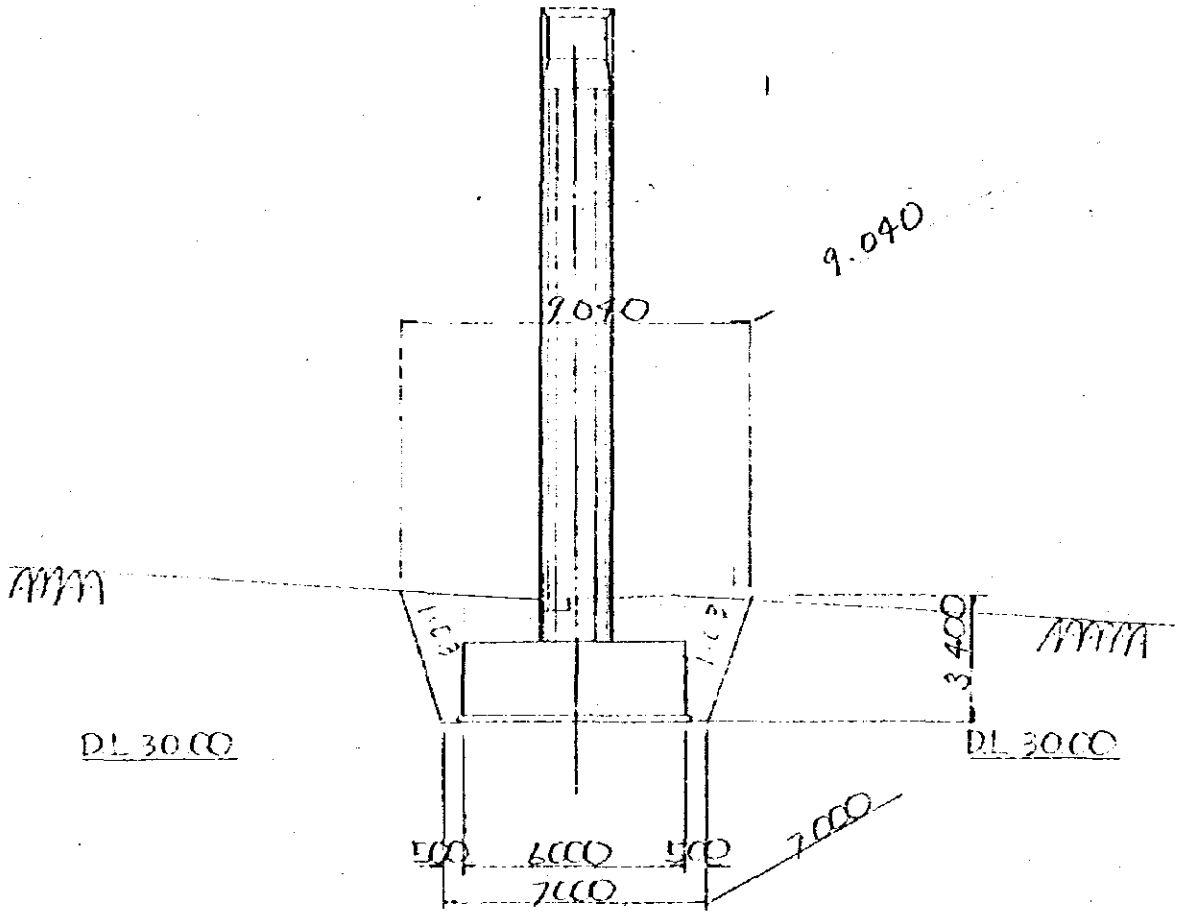

(1) EXCAVATION

rock

$\frac{1}{6} \times 3.4 \times [\, 9.04 \times 9.04 + (9.04 + 7.00)(9.04 + 7.00) + 7.00 \times 7.00 \,] = 219.87 \ m^3$

column

$\frac{1}{4} \times \pi \times 2.00^2 \times 0.30 = 0.942$

footing

$= 72.00$

blinding concrete

$= 7.688$

$\Sigma V = 80.63 \ m^3$

(2) BACK FILL

$219.87 - 80.63 = 139.24 \ m^3$

P_2 - PIER

§ 1 STRUCTURAL FIGURE

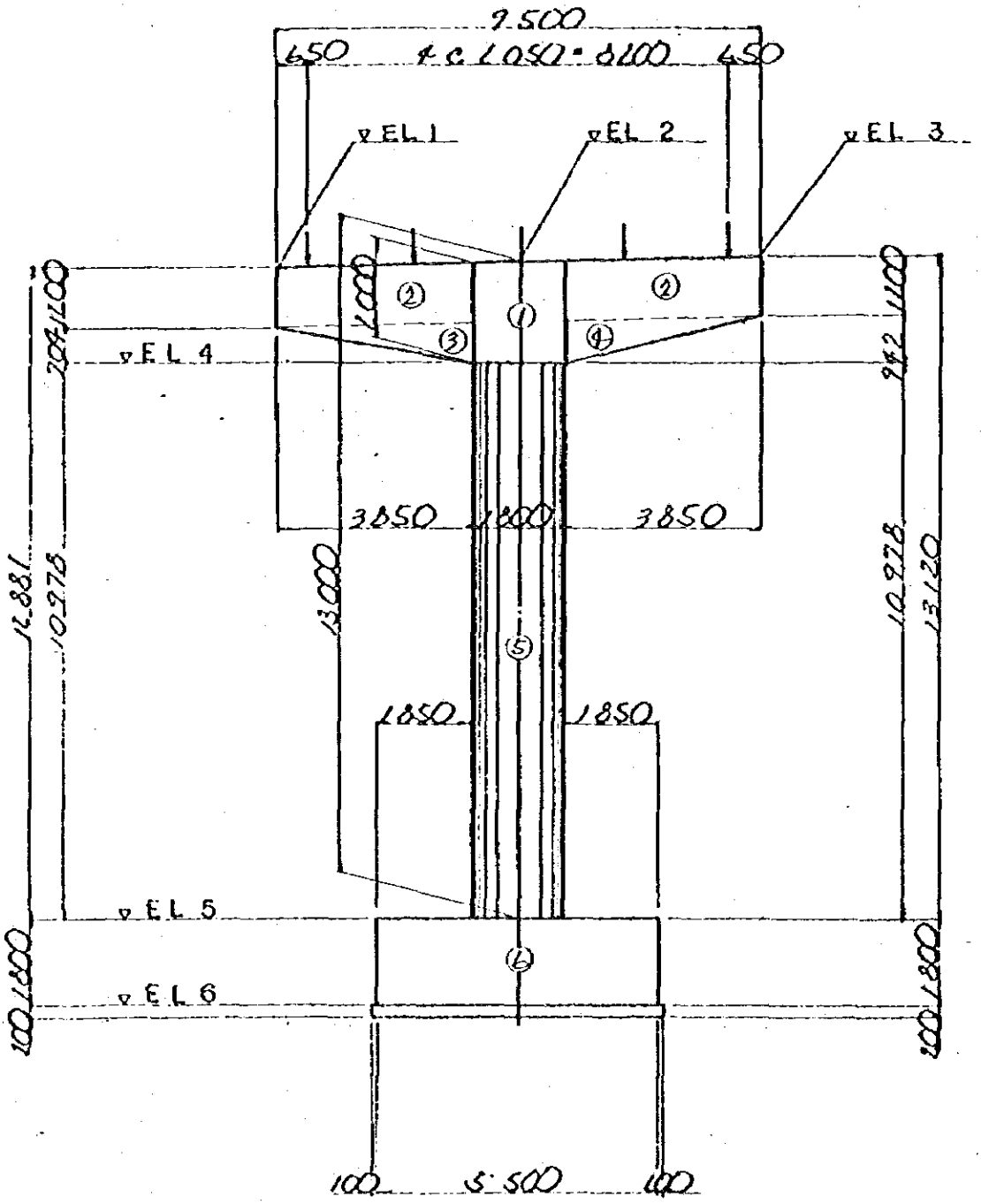

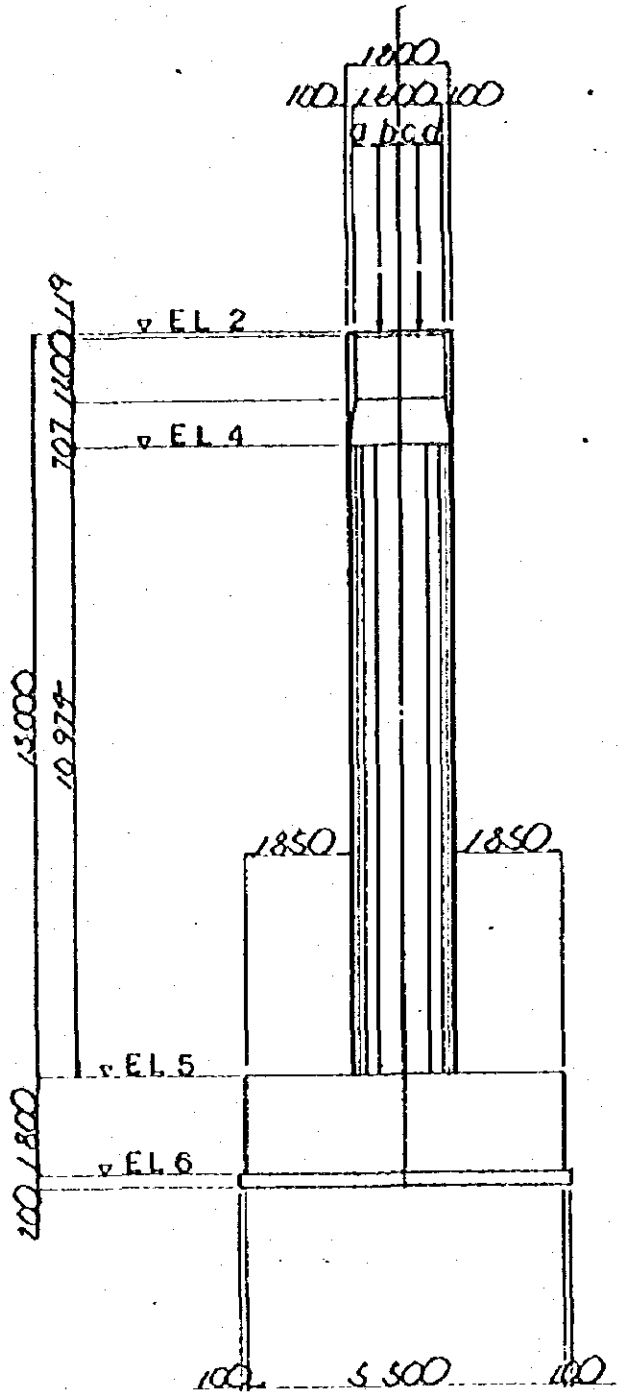
1000
100
1400
100
φ D.C.D
119
EL 2
1100
707
EL 4
13000
10 975
1850
1850
EL 5
1800
EL 6
200
100
5 500
100

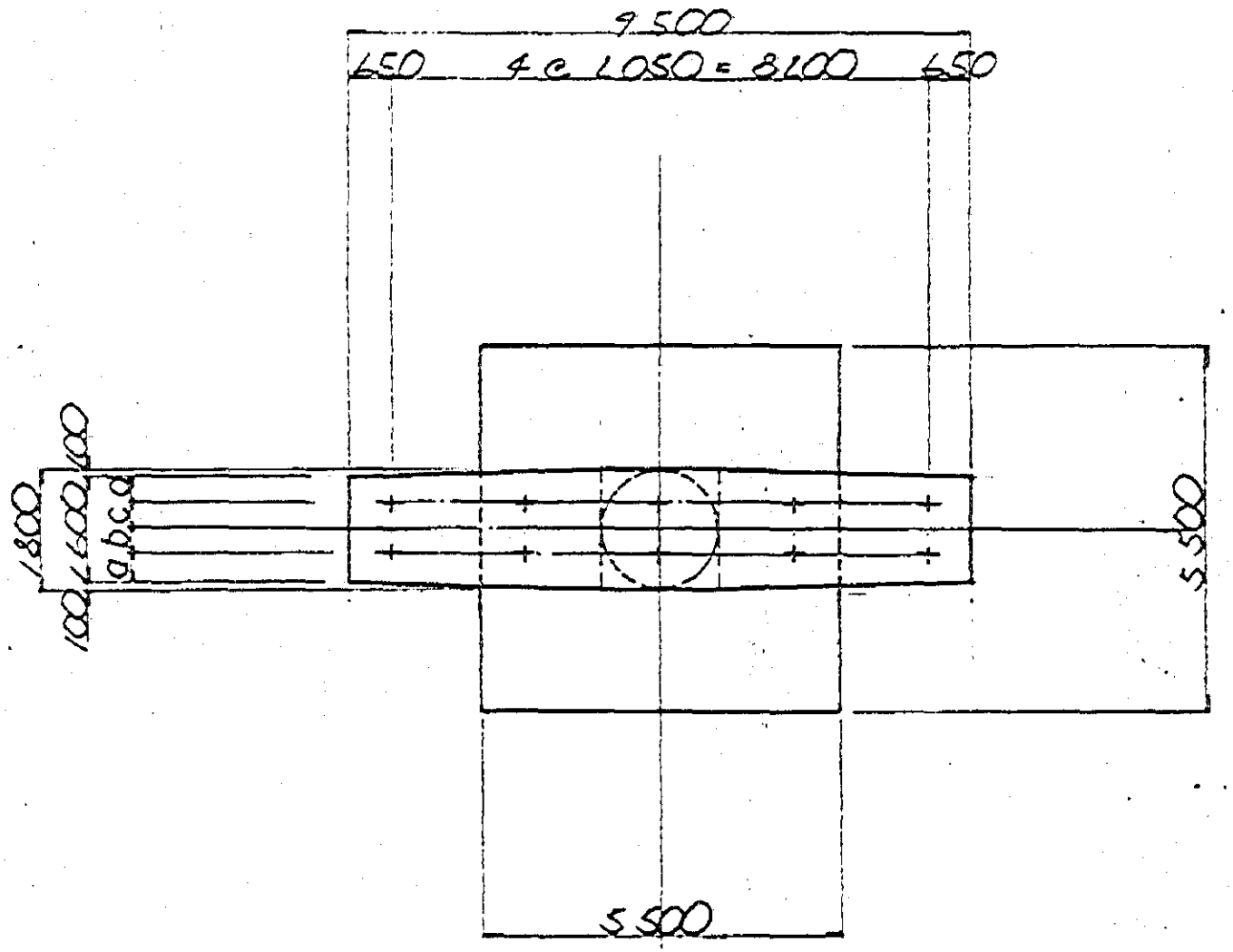

PLAN

Fig. 58

	A-LINE-2		B-LINE-2	
	P 1	P 2	P 1	P 2
STA	71+51.985	71+79.535	71+43.481	71+73.501
P.H	52.926	52.888	54.026	54.074
EL 1	50.463	50.427	51.566	51.615
2	50.582	50.546	51.685	51.734
3	50.701	50.665	51.804	51.853
4	48.556	48.524	49.659	49.711
5	34.182	37.546	34.885	38.733
6	32.181	35.746	32.885	36.933
a	475	425	475	405
b	425	375	425	395
c	375	375	425	405
d	525	425	475	395

§ 2 concrete volume

beam

① $\frac{1}{2} \times (2.00 + 2.045) \times 1.80 \times 1.80 = 6.553$

② $\frac{1}{2} \times (1.60 + 1.80) \times 3.85 \times 1.20 \times 2 = 15.708$

③ $\frac{1}{6} \times 0.80 \times 3.85 \times (2 \times 1.80 + 1.60) = 2.669$

④ $\frac{1}{6} \times 0.845 \times 3.85 \times (2 \times 1.80 + 1.60) = 2.819$

column

⑤ $\frac{1}{4} \times \pi \times 1.80^2 \times 10.978 = 27.936$

footing

⑥ $5.50 \times 1.80 \times 5.50 = 54.45$

$\Sigma V = 110.135\ m^3$

grand total

$V = 110.135\ m^3$

blinding concrete

$5.70 \times 5.70 \times 0.20 = 6.498\ m^3$

§ 3. form area

beam

① $\frac{1}{2} \times (2.00 + 2.045) \times 1.80 \times 2 = 7.281$

$1.80 \times 1.80 \times -\frac{\pi}{4} \times 1.80^2 = 0.695$

② $\sqrt{0.10^2 + 3.85^2} \times 1.20 \times 2 \times 2 = 18.486$

$1.60 \times 1.20 \times 2 = 3.84$

③ $\frac{1}{2} \times \sqrt{0.10^2 + 3.85^2} \times 0.80 \times 2 = 3.081$

$\frac{1}{2} \times (1.60 + 1.80) \times \sqrt{0.704^2 + 3.85^2} = 6.654$

④ $\frac{1}{2} \times \sqrt{0.10^2 + 3.85^2} \times 0.845 \times 2 = 3.254$

$\frac{1}{2} \times (1.60 + 1.80) \times \sqrt{0.942^2 + 3.85^2} = 6.738$

column

⑤ $\pi \times 1.80 \times 10.978 = 62.079$

footing

⑥ $5.50 \times 4 \times 1.80 = 39.60$

$\Sigma A = 151.708\ m^2$

blinding concrete form area

$5.70 \times 4 \times 0.20 = 4.56\ m^2$

grand total

type - A (plane formworks)

A = 50.029 m^2

type - B (curved formworks)

A = 62.079 m^2

type - E (rough finish formworks)

A = 44.16 m^2

§ 4 EARTH WORKS

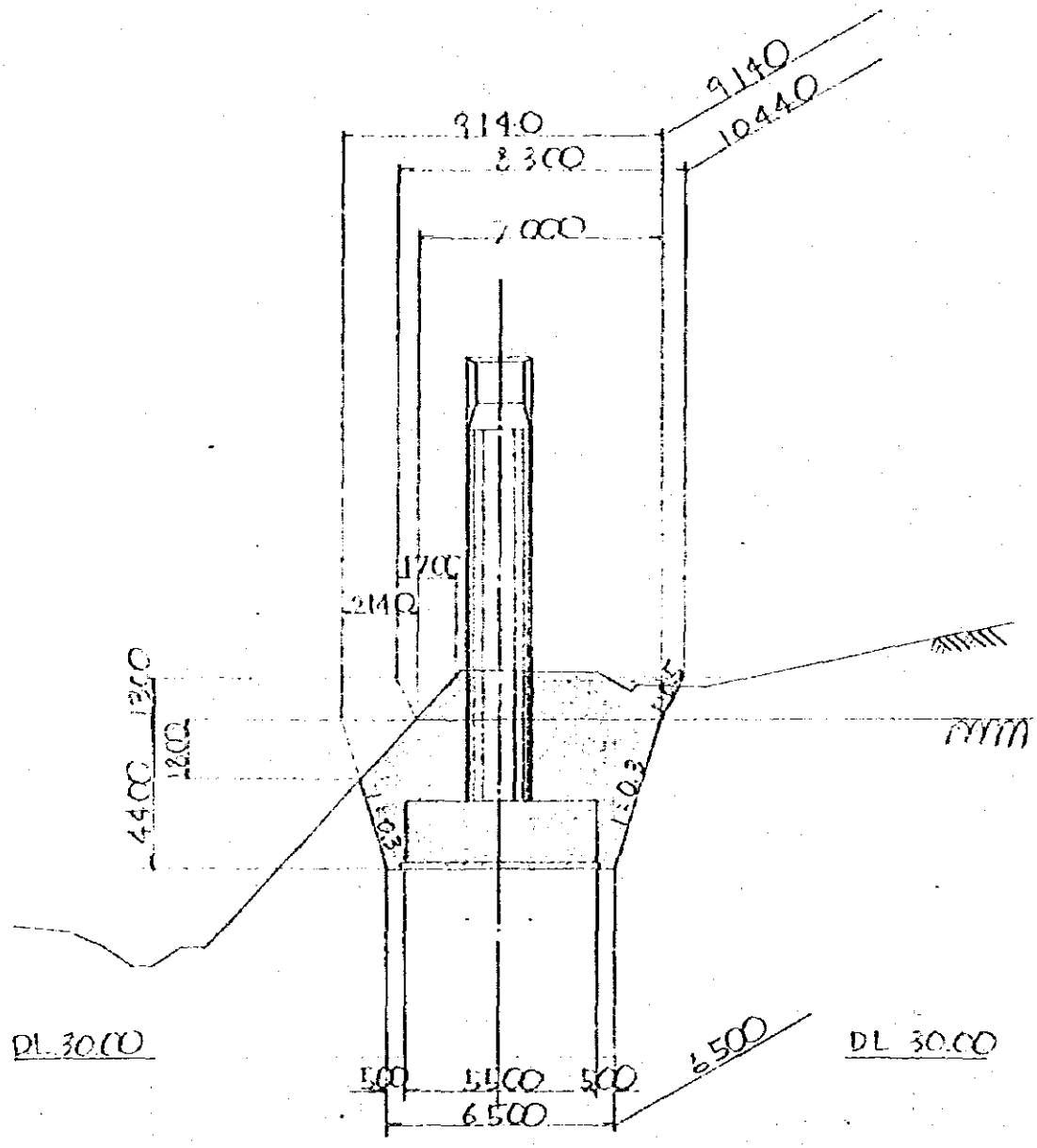

(1) EXCAVATION

common

$\frac{1}{6} \times 1.30 \times [8.30 \times 10.44 + (8.30 + 7.00) \times (10.44 + 9.14) + 7.00 \times 9.14$ = 97.545

$-\frac{1}{6} \times 1.70 \times 1.30 \times (2 \times 10.44 + 9.14)$ = - 11.057

ΣV = 86.488 m^3

rock

$\frac{1}{6} \times 4.40 \times [9.14^2 + (9.14 + 6.50)^2 + 6.50^2]$ = 271.626

$-\frac{1}{6} \times 2.14 \times 1.80 \times (2 \times 9.14 + 8.06)$ = - 16.91

ΣV = 254.716 m^3

column

$\frac{1}{4} \times \pi \times 1.80^2 \times 3.70$ = 9.415

footing

= 54.45

blinding

= 6.498

ΣV = 70.363 m^3

(2) BACK FILL

86.488 + 254.716 - 70.363 = 270.841 m^3

A2. - ABUTMENT

§ 1 STRUCTURAL FIGURE

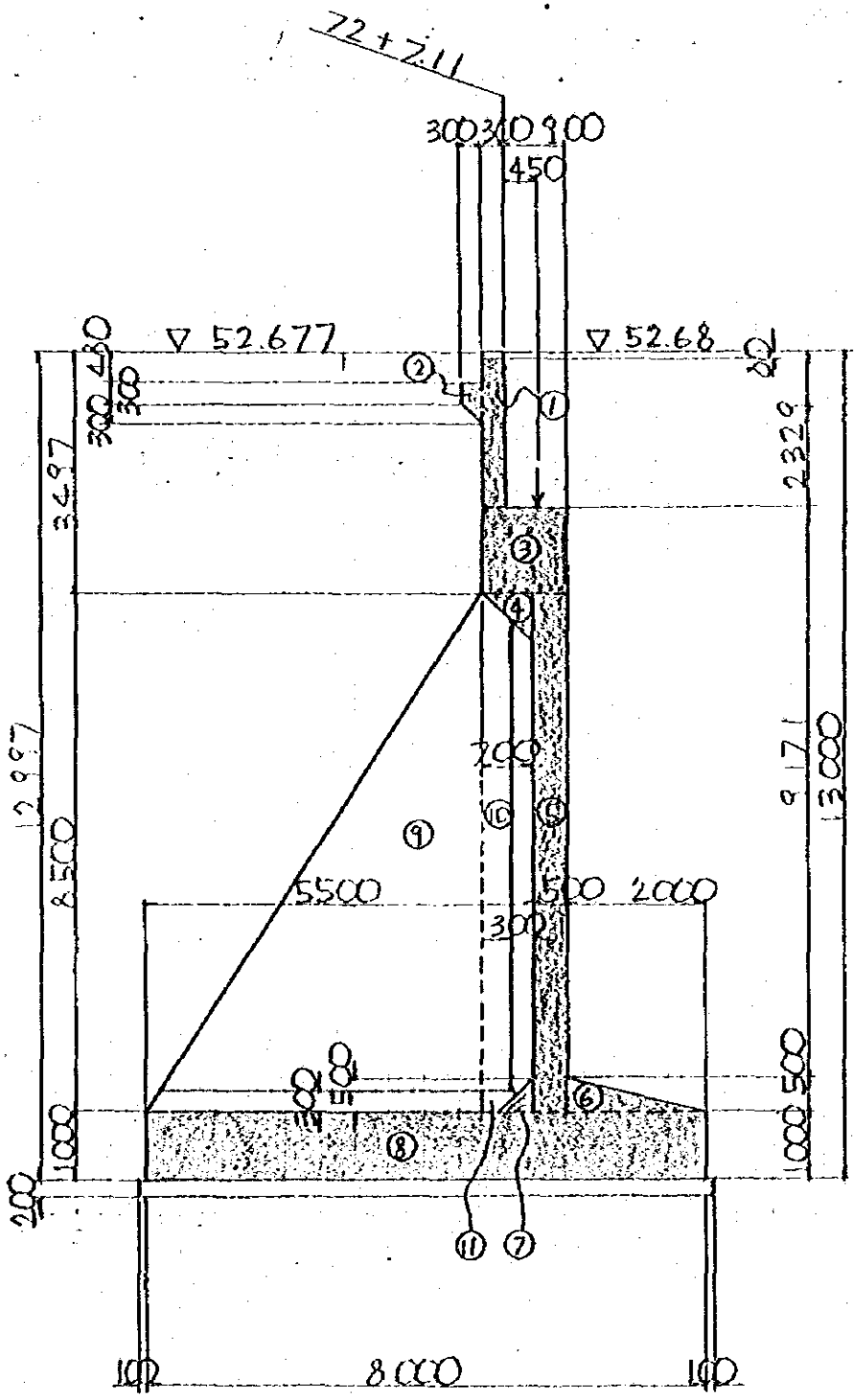

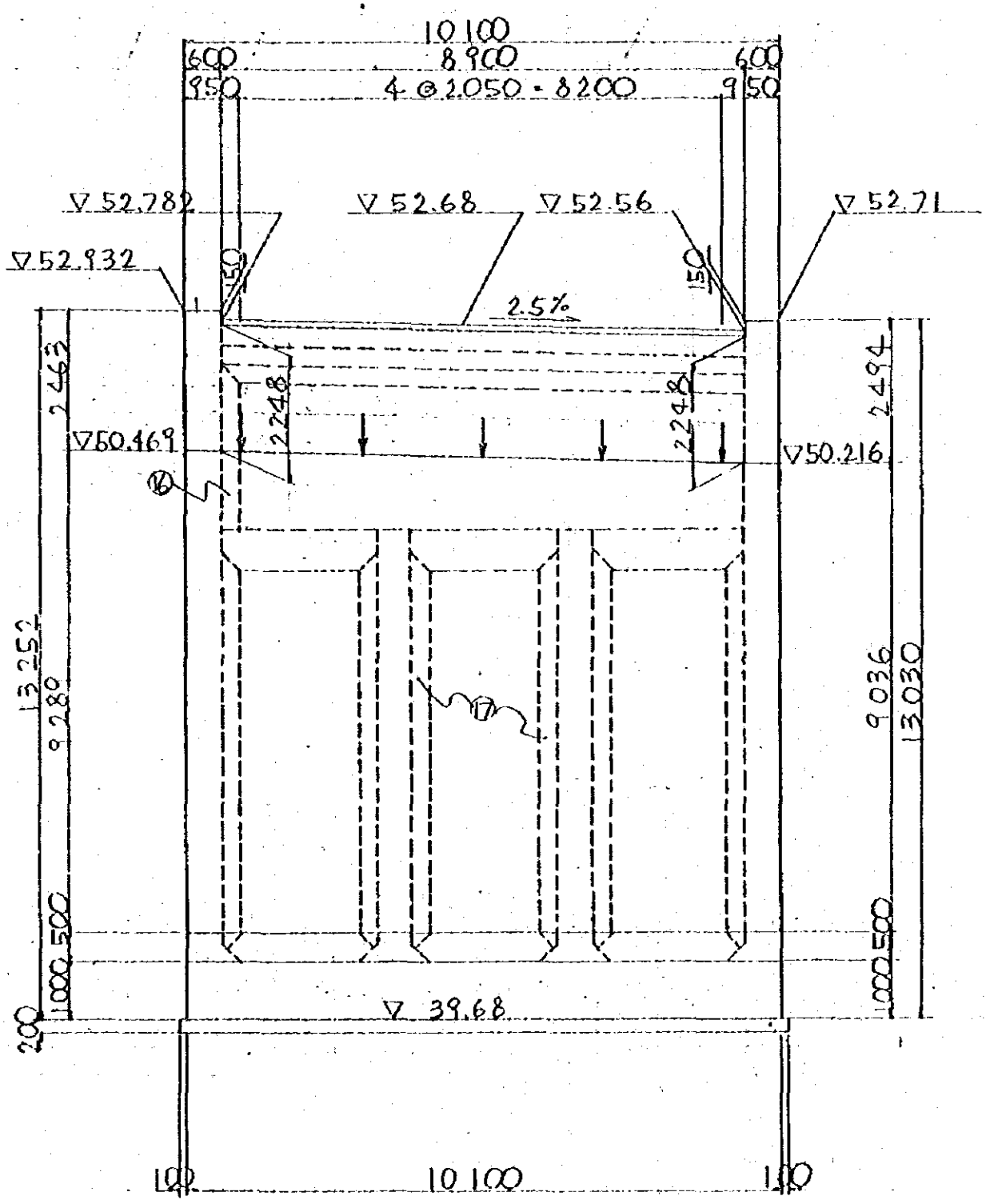
10100
600
8900
600
950
4 @ 2050 = 8200
950
▽52.782
▽52.68
▽52.56
▽52.71
▽52.932
150
150
2.5%
2463
2248
2248
2494
▽50.469
▽50.216
⑯
⑰
13252
9280
9036
13030
1000
500
1000
500
200
▽39.68
100
10100
100

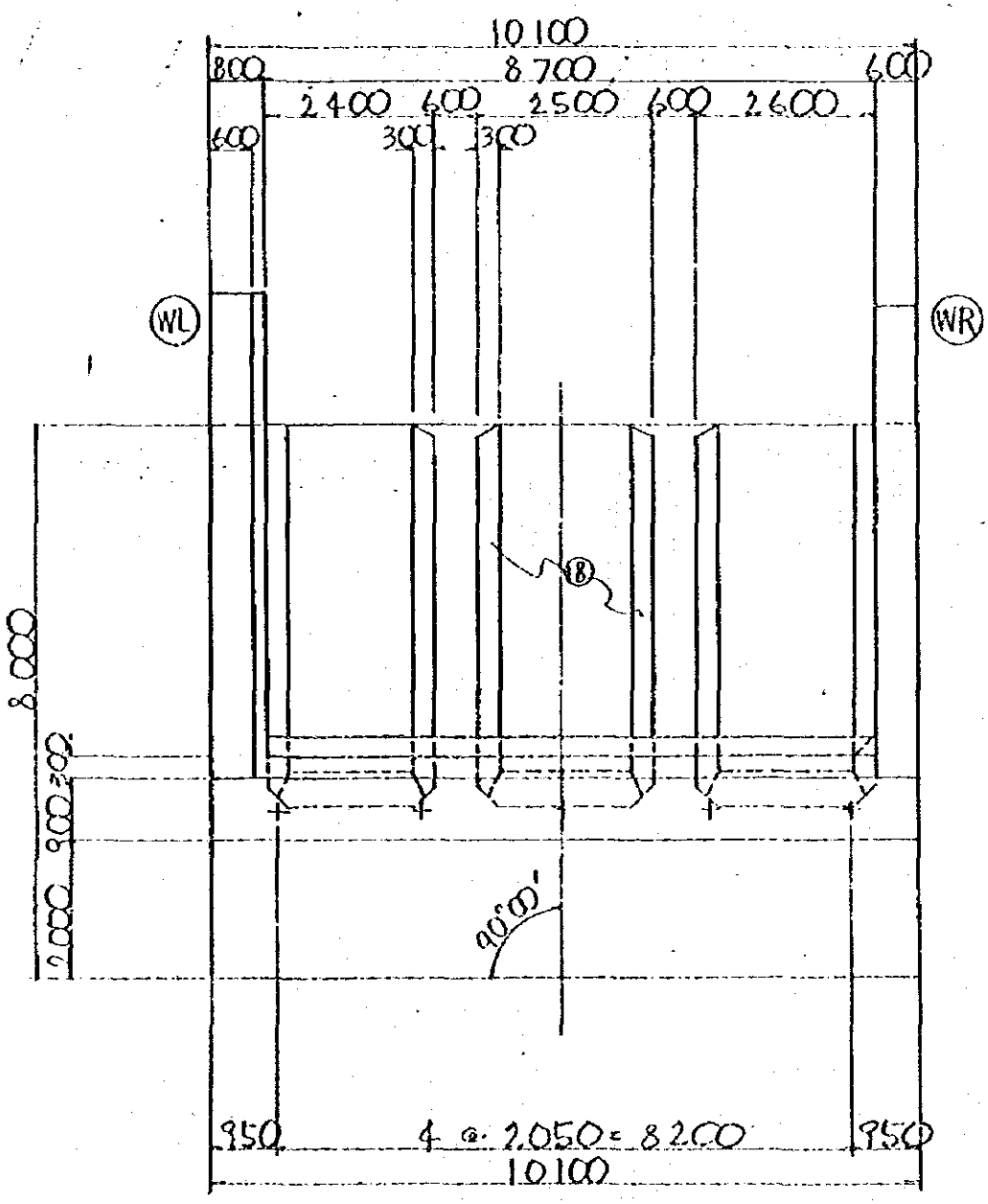
10100
800
8700
600
2400
600
2500
600
2600
600
300
300
WL
WR
8
8000
900
200
2000
90°00'
950
4 @ 2050 = 8200
950
10100

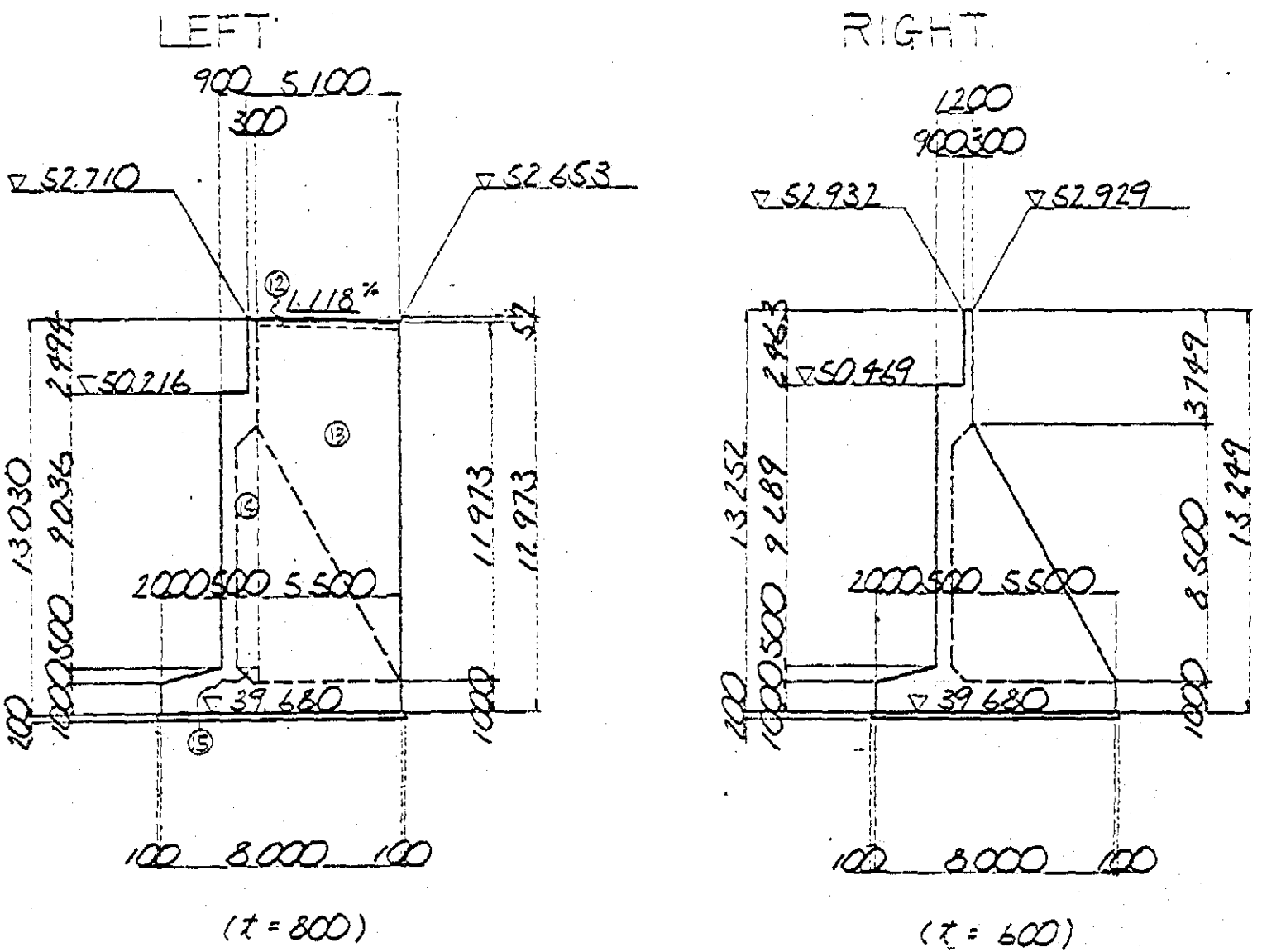
LEFT
RIGHT
900 5100
300
52.710
52.653
1.118%
52
2.994
50.216
13.030
9.036
11.973
12.973
2000 500 5.500
1000 500
200
1000
39.680
100 8000 100
(t = 800)
1200
900 300
52.932
52.929
2.963
50.469
3.749
13.252
9.289
13.249
8.500
(t = 600)

§ 2 concrete volume

Parapet

① $\frac{1}{2} \times (2.463 + 2.478) \times 0.60 \times 0.30 = 0.445$

$2.248 \times 8.90 \times 0.30 = 6.002$

$\frac{1}{2} \times (2.478 + 2.494) \times 0.60 \times 0.30 = 0.447$

② $\frac{1}{2} \times (0.30 + 0.60) \times 0.30 \times 8.70 = 1.175$

wall

③ $\frac{1}{2} \times (1.289 + 1.036) \times 10.10 \times 1.20 = 14.09$

④ $\frac{1}{2} \times 0.70 \times 0.70 \times 10.10 = 2.475$

⑤ $0.50 \times 8.50 \times 10.10 = 42.925$

footing

⑥ $\frac{1}{2} \times 2.00 \times 0.50 \times 10.10 = 5.05$

⑦ $\frac{1}{2} \times 0.50 \times 0.50 \times 10.10 = 1.263$

⑧ $8.00 \times 1.00 \times 10.10 = 80.80$

buttress

⑨ $\frac{1}{2} \times 8.50 \times 4.80 \times 0.60 \times 3 = 36.72$

⑩ $\frac{1}{2} \times (8.00 + 6.30) \times 0.70 \times 0.60 \times 3 = 9.009$

⑪ $\frac{1}{2} \times (0.20 + 0.70) \times 0.50 \times 0.60 \times 3 = 0.405$

wing (left)

⑫ 4.80 × 0.63 × 0.60 = 1.814

⑬ ½ × (11.343 + 11.397) × 4.80 × 0.80 = 43.661

⑭ ½ × (8.00 + 6.30) × 0.70 × 0.80 = 4.004

⑮ ½ × (0.20 + 0.70) × 0.50 × 0.80 = 0.18

haunch

⑯ ½ × 0.30 × 0.30 × 2.537 = 0.114

⑰ ½ × 0.30 × 0.30 × 7.60 × 6 = 2.052

⑱ ½ × 0.30 × 0.30 × 5.30 × 6 = 1.431

$\Sigma V = 254.062\ m^3$

grand total

$V = 254.062\ m^3$

blinding concrete

8.20 × 10.30 × 0.20 = 16.892

§ 3 form area

palapet

① $\frac{1}{2} \times (2.463 + 2.478) \times 0.60$ = 1.482

2.248×8.90 = 20.007

2.248×8.70 = 19.558

$-0.60 \times 8.70 + 0.30 \times 1.248$ = − 5.594

$\frac{1}{2} \times (2.478 + 2.494) \times 0.60 \times 2$ = 2.983

$0.30 \times (2.463 + 2.494)$ = 1.487

$0.23 \times 0.30 \times 2$ = 0.138

② 0.30×8.70 = 2.61

$0.30 \times \sqrt{2} \times 8.70$ = 3.691

wall

③ $\frac{1}{2} \times (1.289 + 1.036) \times 10.10$ = 11.741

$\frac{1}{2} \times (1.262 + 1.036) \times 9.00$ = 10.341

$1.20 \times (1.289 + 1.036)$ = 2.79

④ $0.40 \times \sqrt{2} \times (2.40 + 2.50 + 2.60)$ = 4.243

$0.30 \times \sqrt{2} \times \frac{1}{2} \times (7.50 + 5.70)$ = 2.80

$\frac{1}{2} \times 0.70 \times 0.70 \times 2$ = 0.49

⑤ 8.50×10.10 = 85.85

$7.30 \times (1.80 + 1.90 + 2.00)$ = 41.61

$0.50 \times 8.50 \times 2$ = 8.50

footing

⑥ $\frac{1}{2} \times 2.00 \times 0.50 \times 2$ = 1.00

⑦ $\frac{1}{2} \times 0.50 \times 0.50 \times 2$ = 0.25

⑧ $(8.00 + 10.10) \times 2 \times 1.00$ = 36.20

buttress

⑨ $\frac{1}{2} \times 8.20 \times 4.631 \times 2 \times 3$ = 113.923

$\sqrt{4.80^2 + 8.50^2} \times 0.60 \times 3$ = 17.571

⑩ $\frac{1}{2} \times (8.20 + 7.80) \times 0.40 \times 5$ = 16.00

$\frac{1}{2} \times (8.00 + 7.30) \times 0.70$ = 5.355

$\frac{1}{2} \times (0.20 + 0.70) \times 0.50$ = 0.225

wing (left)

⑫ $(4.80 \times 2 + 0.60) \times 0.63$ = 6.426

⑬ $\frac{1}{2} \times (11.343 + 11.397) \times 4.80 \times 2$ = 109.152

$-0.30 \times (4.80 + 3.137)$ = − 2.381

0.80×11.343 = 9.074

⑭ $\frac{1}{2} \times (8.20 + 7.80) \times 0.40$ = 3.20

$\frac{1}{2} \times (8.00 + 7.30) \times 0.70$ = 5.355

⑮ $\frac{1}{2} \times (0.20 + 0.70) \times 0.50$ = 0.225

haunch

⑯ $0.30 \times \sqrt{2} \times 2.537$ = 1.076

⑰ $0.30 \times \sqrt{2} \times 7.60 \times 6$ = 19.346

⑱ $0.30 \times \sqrt{2} \times 5.30 \times 6$ = 13.482

$\frac{1}{2} \times 0.30 \times 0.30$ = 0.045

$\frac{1}{2} \times 0.30 \times 0.345 \times 5$ = 0.259

ΣA = 570.52 m^2

blinding concrete form area

$(8.20 + 10.30) \times 2 \times 0.20$ = 7.40 m^2

grand total

type - A (plane formworks)

A = 533.07 m^2

type - E (rough finish formworks)

A = 44.85 m^2

§ 4 EARTH WORKS

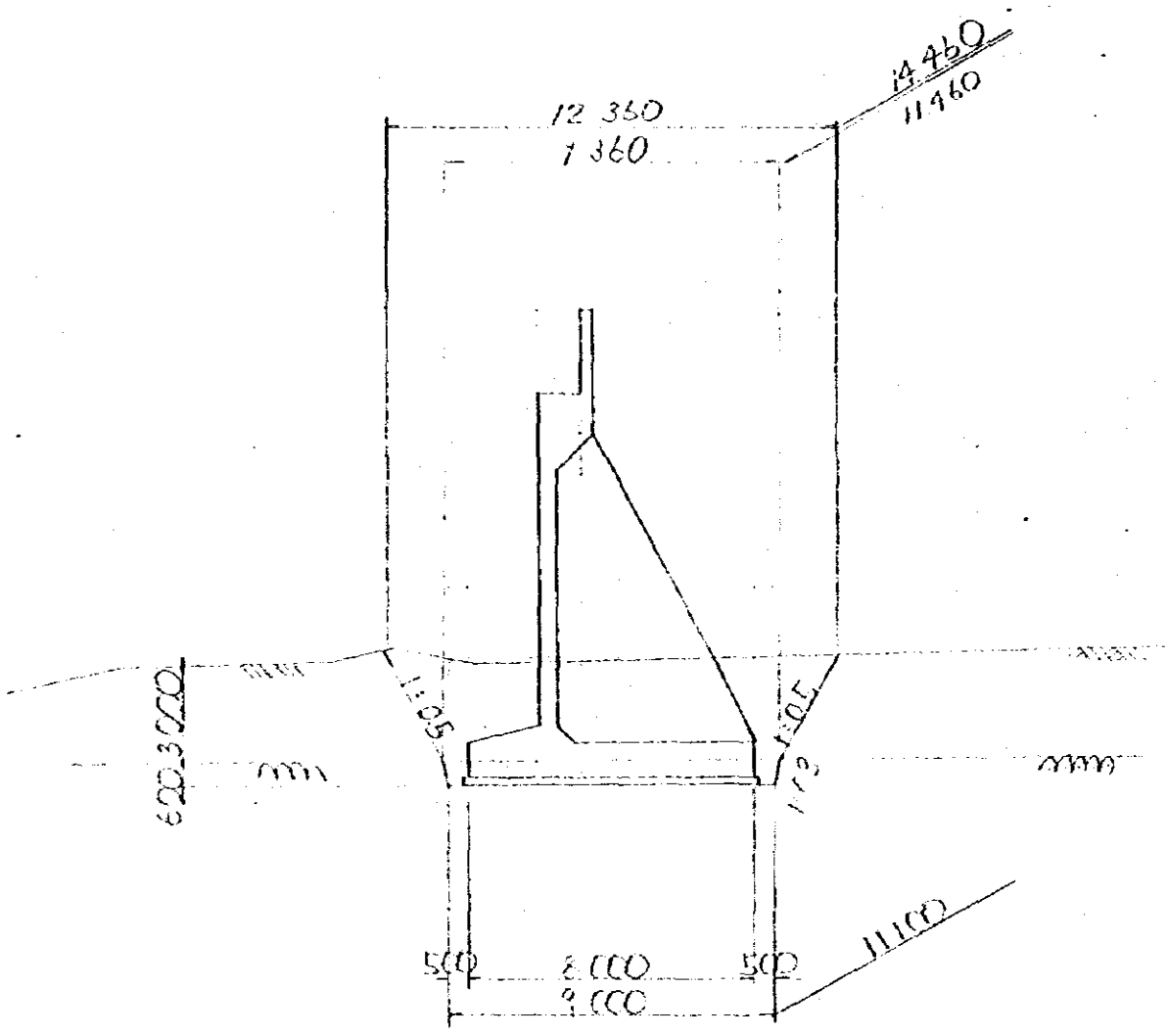

(1) EXCAVATION

common

$\frac{1}{6} \times 3.00 \times [12.36 \times 14.46 + (12.36 + 9.36)$
$(14.46 + 11.46) + 9.36 \times 11.46] = 424.49 \ m^3$

Rock $\frac{1}{6} \times 0.6 \times [9.36 \times 11.46 + (9.36 + 9.00)(11.46 + 11.10) + 9.00 \times 11.10] = 62.14 \ m^3$

wall

$0.50 \times 2.10 \times 10.10 = 10.605$

buttress

$\frac{1}{2} \times (4.314 + 5.50) \times 2.10 \times 0.60 \times 3 = 18.548$

$2.10 \times 0.80 \times 5.50 = 9.24$

$-\frac{1}{2} \times 0.50 \times 0.50 \times (0.60 \times 3 + 0.80) = -0.325$

haunch

$\frac{1}{2} \times 0.30 \times 0.30 \times 1.90 \times 6 = 0.513$

$= 1.431$

footing $= 87.113$

blinding concrete

$= 16.892$

$\Sigma V = 144.017 \ m^3$

(2) BACK FILL

$486.63 - 144.017 = 342.61 \ m^3$

§§ 4. A-LINE-3. B.R.

A1 - ABUTMENT

§ 1 STRUCTURAL FIGURE

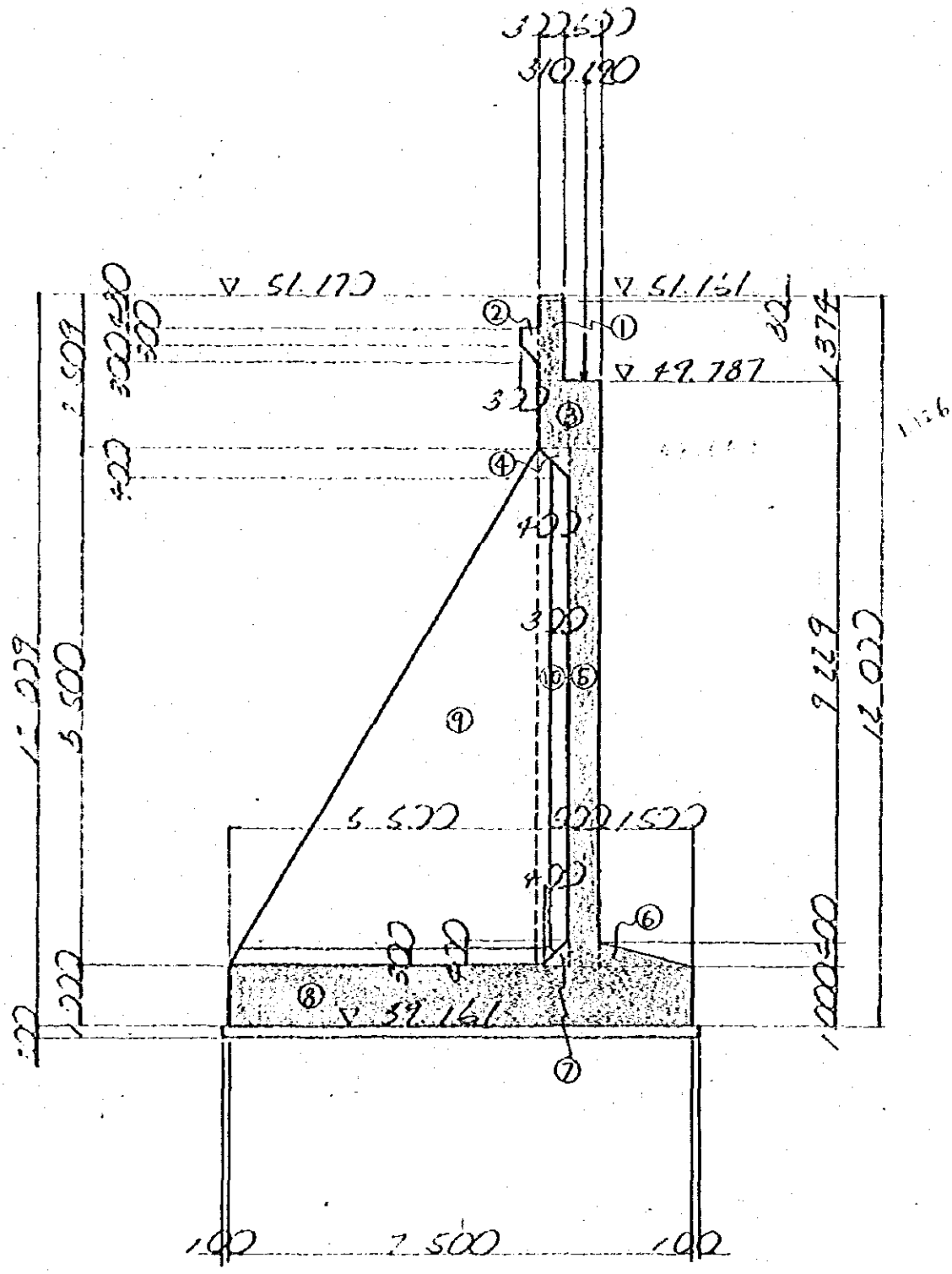

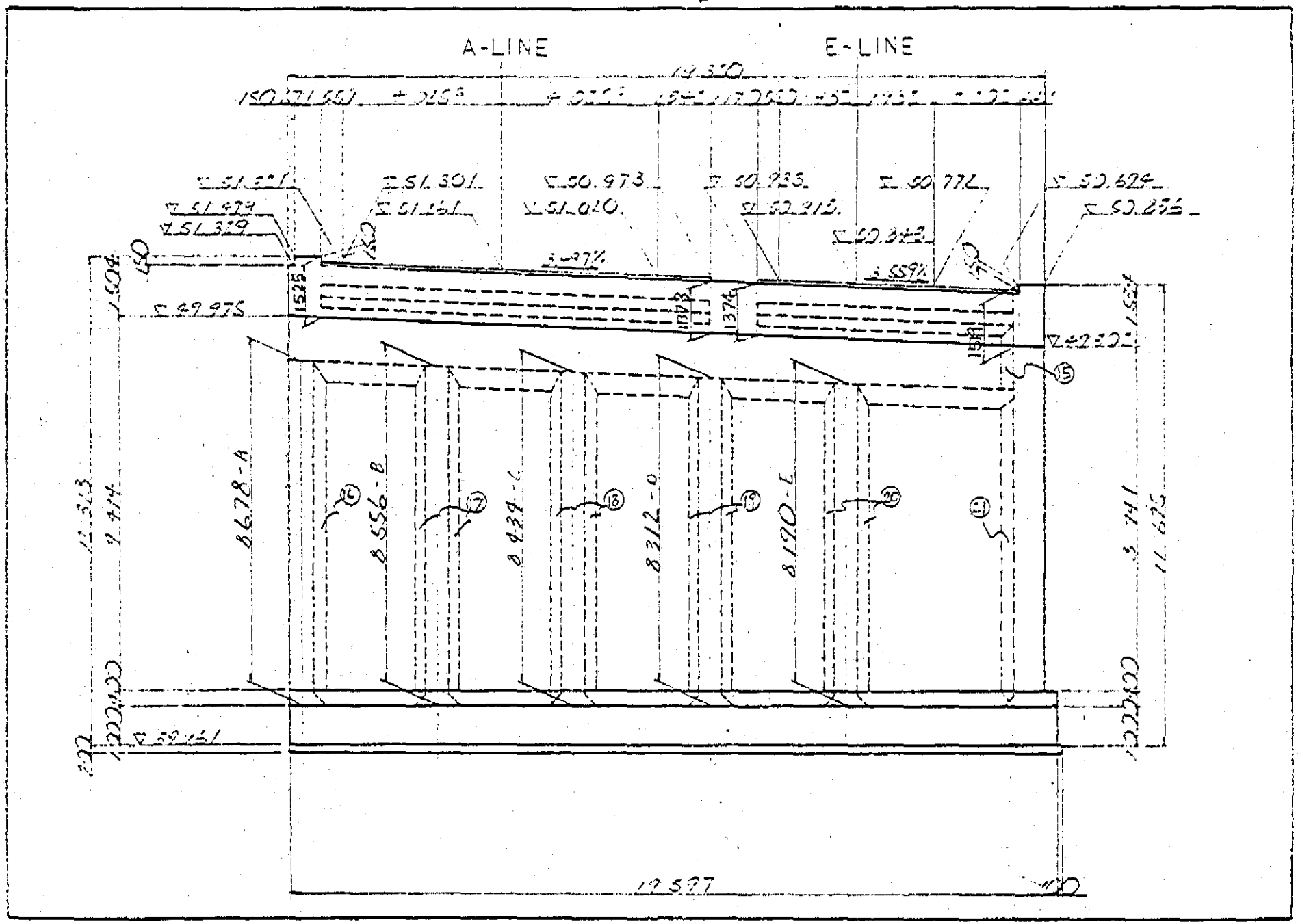
A-LINE
E-LINE
19.510
51.301
50.973
50.772
50.624
51.161
51.010
50.915
50.835
51.329
49.975
1525
1374
8.678-A
8.556-B
8.439-C
8.312-D
8.190-E
19.597

Fig. 80

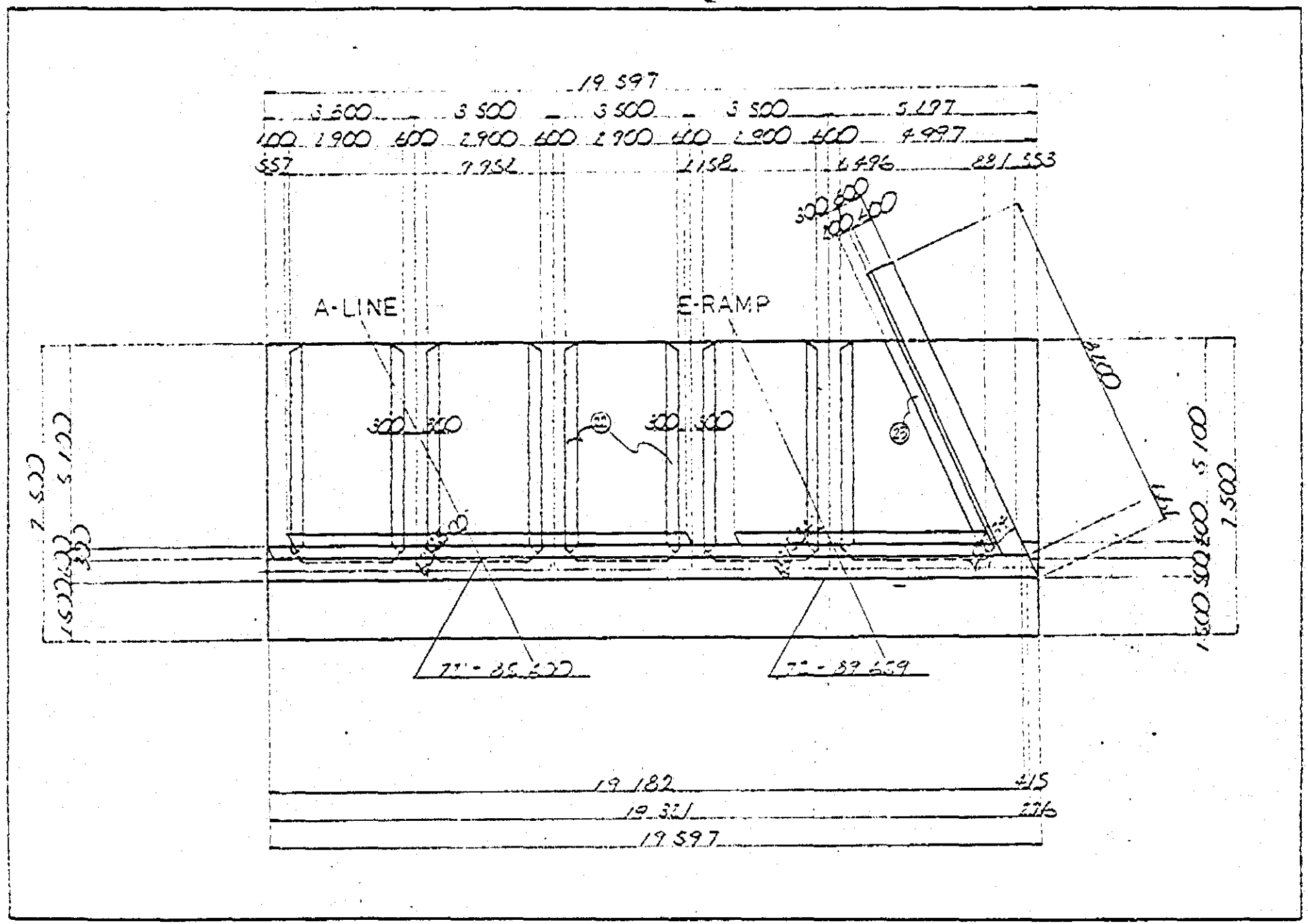
19 597
3 500
3 500
3 500
3 500
5 197
400
1 900
400
2 900
400
2 900
400
2 900
400
4 997
557
7 952
2 158
6 496
281 553
A-LINE
E-RAMP
300
300
300
300
7 500
5 100
5 100
7 500
19 182
415
19 321
276
19 597

18

WING (RIGHT)

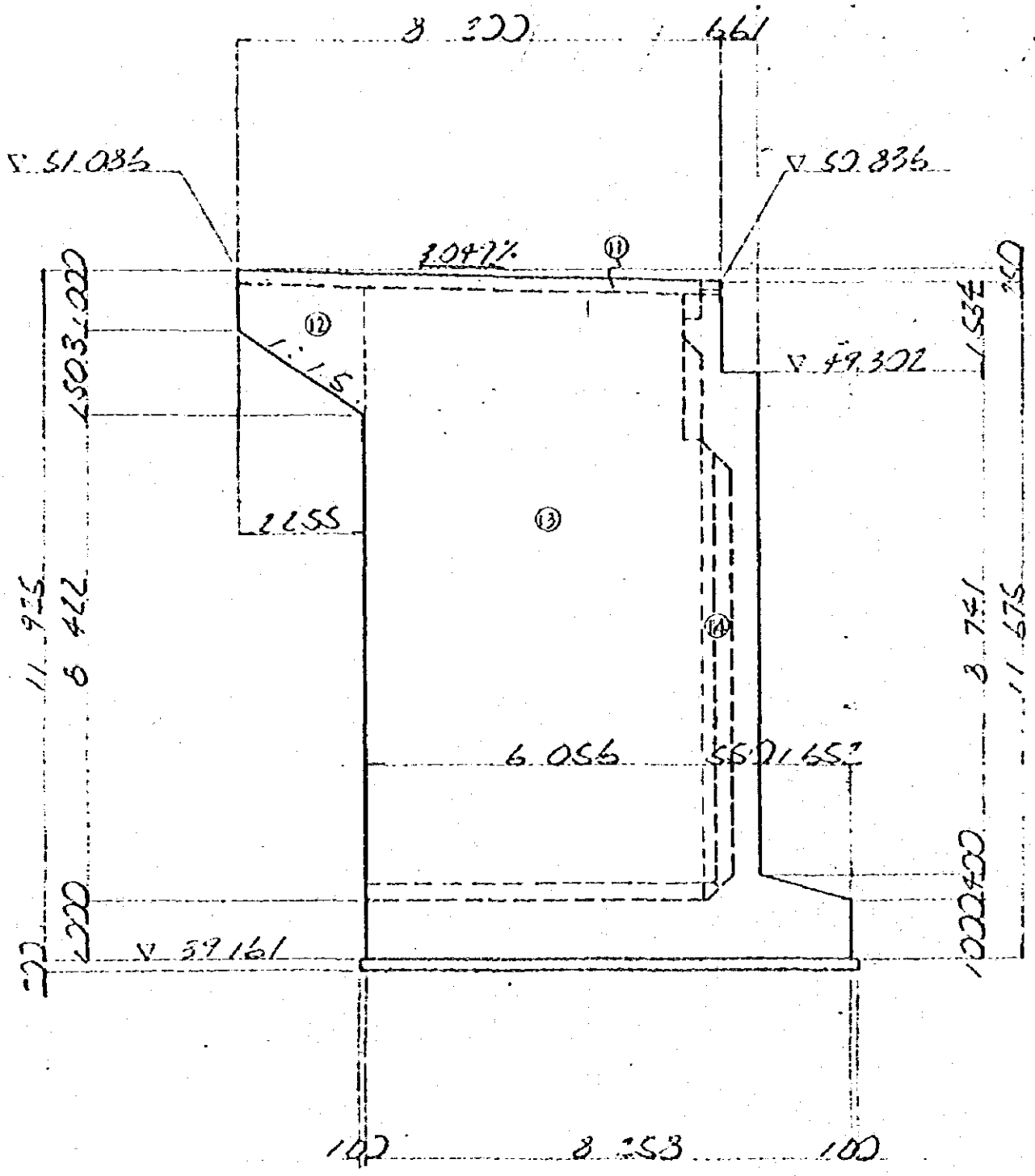
8 300
661
51.035
50.835
3.047%
11
12
1:1.5
49.302
1.534
1503.020
2255
13
14
11.975
6.422
8.741
11.675
6.056
55.01.652
2000
1000400
39.161
100
8.353
100

§ 2 concrete vlume

Parapet

① $\frac{1}{2} \times (1.534 + 1.519) \times 0.661 \times 0.30 = 0.303$

$\frac{1}{2} \times (1.289 + 1.294) \times 6.716 \times 0.30 = 2.602$

$\frac{1}{2} \times (1.294 + 1.293) \times 1.170 \times 0.30 = 0.445$

$\frac{1}{2} \times (1.293 + 1.295) \times 9.952 \times 0.30 = 3.863$

$\frac{1}{2} \times (1.504 + 1.525) \times 0.671 \times 0.30 = 0.305$

$\frac{1}{3} \times 1.354 \times 0.15 \times 0.30 = 0.020$

② $\frac{1}{2} \times (0.30 + 0.60) \times 0.30 \times (9.952 + 6.496) = 2.220$

wall

③ $0.90 \times 1.126 \times \frac{1}{2} \times (19.597 + 19.182) = 19.649$

④ $\frac{1}{2} \times 0.40 \times 0.40 \times \frac{1}{2} \times (19.367 + 19.182) = 1.542$

⑤ $0.50 \times 8.352 \times \frac{1}{2} \times (19.367 + 19.597) = 81.357$

$(\frac{1}{2} \times (2.618 + 3.015))$

footing

⑥ $\frac{1}{2} \times 0.40 \times 1.50 \times 19.597 = 5.879$

⑦ $\frac{1}{2} \times 0.40 \times 0.40 \times 19.597 = 1.568$

⑧ $7.50 \times 1.00 \times 19.597 = 146.978$

buttress $n = 5$

⑨A $\frac{1}{2} \times 5.10 \times 8.678 \times 0.60 = 13.277$

⑩$_A$ $\frac{1}{2} \times (8.67 + 7.\quad) \times 0.40 \times 0.60$ =

⑨$_B$ $\frac{1}{2} \times 5.10 \times 8.556 \times 0.60$ = 13.091

⑩$_B$ $\frac{1}{2} \times (8.556 + 7.756) \times 0.40 \times 0.60$ = 1.957

⑨$_C$ $\frac{1}{2} \times 5.10 \times 8.434 \times 0.60$ = 12.904

⑩$_C$ $\frac{1}{2} \times (8.434 + 7.634) \times 0.40 \times 0.60$ = 1.928

⑨$_D$ $\frac{1}{2} \times 5.10 \times 8.312 \times 0.60$ = 12.717

⑩$_D$ $\frac{1}{2} \times (8.312 + 7.512) \times 0.40 \times 0.60$ = 1.899

⑨$_E$ $\frac{1}{2} \times 5.10 \times 8.19 \times 0.60$ = 12.531

⑩$_E$ $\frac{1}{2} \times (8.19 + 7.39) \times 0.40 \times 0.60$ = 1.870

wing (right)

⑪ $0.23 \times 0.60 \times \frac{1}{2} \times (7.98 + 7.76)$ = 1.086

⑫ $\{\frac{1}{2} \times (0.77 + 2.204) \times \frac{1}{2} \times (2.255 + 2.035)\}$
$\times 0.80$ = 2.552

⑬ $\frac{1}{2} \times (10.626 + 10.455) \times 5.616 \times 0.80$ = 47.356

⑭ $\frac{1}{2} \times (8.015 + 7.215) \times 0.44 \times 0.80$ = 2.68

haunch

⑮	½ × 0.30 × 0.30 × 1.415	=	0.064
⑯	½ × 0.30 × 0.30 × 8.278	=	0.323
⑰	½ × 0.30 × 0.30 × 8.156 × 2	=	0.734
⑱	½ × 0.30 × 0.30 × 8.034 × 2	=	0.723
⑲	½ × 0.30 × 0.30 × 7.912 × 2	=	0.712
⑳	½ × 0.30 × 0.30 × 7.79 × 2	=	0.701
㉑	½ × 0.30 × 0.30 × 7.615	=	0.343
㉒	½ × 0.30 × 0.30 × 5.40 × 9	=	2.187
㉓	½ × 0.30 × 0.30 × 5.616	=	0.253

$\Sigma V = 400.607\ m^3$

grand total

$V = 400.607\ m^3$

blinding concrete

$7.70 \times 19.697 \times 0.20 = 30.333\ m^3$

§ 3 form area

Parapet

①	$\frac{1}{2} \times (1.519 + 1.534) \times 0.661$	=	1.009
	$\frac{1}{2} \times (1.289 + 1.294) \times 6.716 \times 2$	=	17.347
	$\frac{1}{2} \times (1.294 + 1.293) \times 1.17 \times 2$	=	3.027
	$\frac{1}{2} \times (1.293 + 1.295) \times 9.952 \times 2$	=	25.756
	$\frac{1}{2} \times (1.504 + 1.525) \times 0.671$	=	1.016
	0.15×1.354	=	0.203
	$0.30 \times 1.504 + 0.33 \times 1.534$	=	0.957
	$-0.60 \times (9.952 + 6.496) + 0.30 \times 0.289$	=	-9.956
	$0.23 \times 0.33 \times 2$	=	0.152
②	$0.30 \times (9.952 + 6.496)$	=	4.934
	$0.30 \times \sqrt{2} \times (9.952 + 6.496)$	=	6.978
	$\frac{1}{2} \times (0.30 + 0.60) \times 0.33 \times 3$	=	0.446

Wall

③	$1.126 \times (19.32 + 18.329)$	=	42.393
	$0.90 \times 1.126 + 0.991 \times 1.126$	=	2.129
④	$0.10 \times \sqrt{2} \times 2.90 \times 4$	=	1.64
	$0.30 \times \sqrt{2} \times \frac{1}{2} \times (2.90 + 2.30) \times 4$	=	4.412
	$0.10 \times \sqrt{2} \times 3.701$	=	0.523
	$0.30 \times \sqrt{2} \times \frac{1}{2} \times (3.701 + 3.071)$	=	1.437

$\frac{1}{2} \times 0.40 \times 0.40 + \frac{1}{2} \times 0.40 \times 0.44$ = 0.168

⑤ $\frac{1}{2} \times (8.688 + 8.015) \times 19.597$ = 163.664

$\frac{1}{2} \times (7.878 + 7.756) \times 2.30$ = 17.979

$\frac{1}{2} \times (7.756 + 7.634) \times 2.30$ = 17.699

$\frac{1}{2} \times (7.634 + 7.512) \times 2.30$ = 17.418

$\frac{1}{2} \times (7.512 + 7.390) \times 2.30$ = 17.137

$\frac{1}{2} \times (7.390 + 6.827) \times 3.071$ = 16.350

0.50×8.688 = 4.344

0.551×8.015 = 4.416

footing

⑥ $\frac{1}{2} \times 1.50 \times 0.40 \times 2$ = 0.60

⑦ $\frac{1}{2} \times 0.40 \times 0.40 \times 2$ = 0.16

$0.40 \times \sqrt{2} \times (4 \times 2.60 + 3.401)$ = 7.807

⑧ $1.00 \times (7.50 + 19.597) \times 2$ = 54.194

buttress

⑨-A $\frac{1}{2} \times 5.10 \times 8.678 \times 2$ = 44.258

$\sqrt{5.10^2 + 8.678^2} \times 0.60$ = 6.059

⑩-A $\frac{1}{2} \times (8.678 + 7.878) \times 0.40$ = 3.311

$\frac{1}{2} \times (8.378 + 8.278) \times 0.10$ = 0.833

⑨$_B$	$\frac{1}{2} \times 5.10 \times 8.556 \times 2$	=	43.636
	$\sqrt{5.10^2 + 8.556^2} \times 0.60$	=	5.976
⑩$_B$	$\frac{1}{2} \times (8.256 + 8.156) \times 0.10 \times 2$	=	1.641
⑨$_C$	$\frac{1}{2} \times 5.10 \times 8.434 \times 2$	=	43.013
	$\sqrt{5.10^2 + 8.434^2} \times 0.60$	=	5.914
⑩$_C$	$\frac{1}{2} \times (8.134 + 8.034) \times 0.10 \times 2$	=	1.617
⑨$_D$	$\frac{1}{2} \times 5.10 \times 8.312 \times 2$	=	42.391
	$\sqrt{5.10^2 + 8.312^2} \times 0.60$	=	5.851
⑩$_D$	$\frac{1}{2} \times (8.012 + 7.912) \times 0.10 \times 2$	=	1.592
⑨$_E$	$\frac{1}{2} \times 5.10 \times 8.190 \times 2$	=	41.769
	$\sqrt{5.10^2 + 8.190^2} \times 0.60$	=	5.789
⑩$_E$	$\frac{1}{2} \times (7.89 + 7.79) \times 0.10 \times 2$	=	1.568

wing (right)

⑪	$(7.87 + 7.54 + 0.60) \times 0.23$	=	3.682
⑫	$\frac{1}{2} \times (0.77 + 2.285) \times 2.255$	=	3.445
	$\frac{1}{2} \times (0.77 + 2.109) \times 1.979$	=	2.849
	0.80×0.77	=	0.616
	$\frac{1}{2} \times (2.673 + 2.346) \times 0.80$	=	2.008
⑬	$\frac{1}{2} \times (10.626 + 10.455) \times 5.616 \times 2$	=	118.391
	$\frac{1}{2} \times (8.422 + 8.606) \times 0.881$	=	7.501
	$\frac{1}{2} \times (8.015 + 7.215) \times 0.440$	=	3.351
	$\frac{1}{2} \times (7.715 + 7.615) \times 0.110$	=	0.843

haunch

⑮	$0.30 \times \sqrt{2} \times 1.415$	=	0.60
⑯	$0.30 \times \sqrt{2} \times 8.278$	=	3.512
⑰	$0.30 \times \sqrt{2} \times 8.156 \times 2$	=	6.921
⑱	$0.30 \times \sqrt{2} \times 8.034 \times 2$	=	6.817
⑲	$0.30 \times \sqrt{2} \times 7.912 \times 2$	=	6.714
⑳	$0.30 \times \sqrt{2} \times 779 \times 2$	=	6.61
㉑	$0.30 \times \sqrt{2} \times 7.615$	=	3.231
㉒	$0.30 \times \sqrt{2} \times 5.40 \times 9$	=	20.619
	$\frac{1}{2} \times 0.30 \times 0.30 \times 9$	=	0.405
㉓	$0.30 \times \sqrt{2} \times 5.616$	=	4.383
	$\frac{1}{2} \times 0.30 \times 0.30$	=	0.045
	ΣA	=	882.08 m^2

blinding concrete form area

$(0.70 + 19.697) \times 2 \times 0.20$ = 10.959 m^2

type-A (plane formworks)

819.319 m^2

type-E (rough finish formworks)

73.72 m^2

§ 4. EARTH WORKS

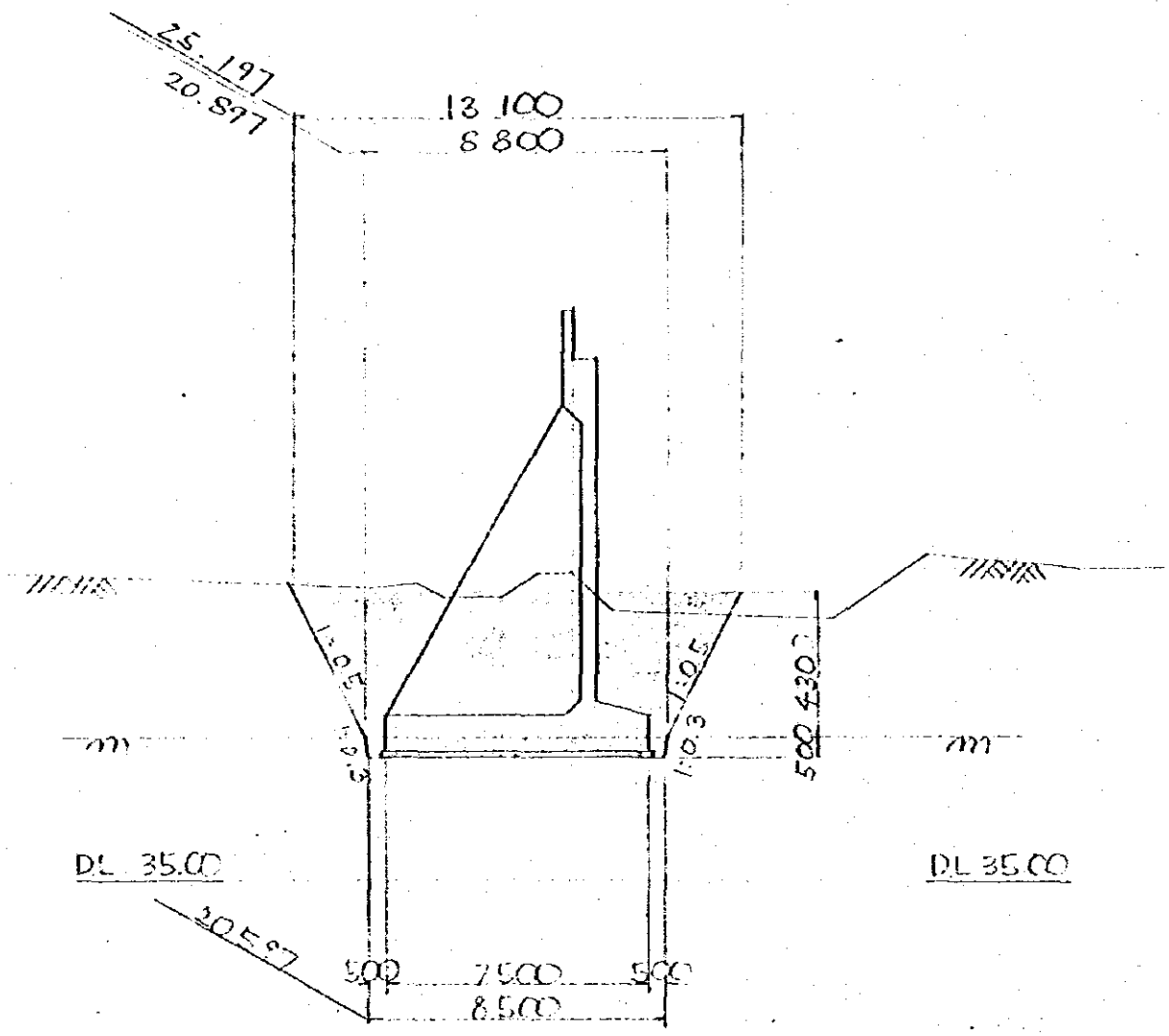

(1) EXCAVATION

common

$\frac{1}{6} \times 4.30 \times [13.10 \times 25.197 + (13.10 + 8.80)$
$(25.197 + 20.897) + 8.80 \times 20.897] = 1091.79 \ m^3$

ROCK $\frac{1}{6} \times 0.50 \times [8.80 \times 20.897 + (8.80 + 8.50)(20.897 + 20.597) + 8.50 \times 20.597] = 89.73 \ m^3$

wall

$0.50 \times 3.10 \times 19.597 = 30.375$

buttress

$\frac{1}{2} \times (3.64 + 5.50) \times 3.10 \times 0.60 \times 5 = 42.501$

$3.10 \times 6.056 \times 0.80 = 15.019$

$-\frac{1}{2} \times 0.40 \times 0.40 \times (0.60 \times 5 + 0.80) = -0.304$

haunch

$\frac{1}{2} \times 0.30 \times 0.30 \times 3.00 \times 10 = 1.35$

$= 2.44$

footing $= 154.425$

blinding concrete

$= 30.333$

$\Sigma V = 276.139 \ m^3$

(2) BACK FILL

$1181.52 - 276.139 = 905.38 \ m^3$

A2. - ABUTMENT

§ 1 STRUCTURAL FIGURE

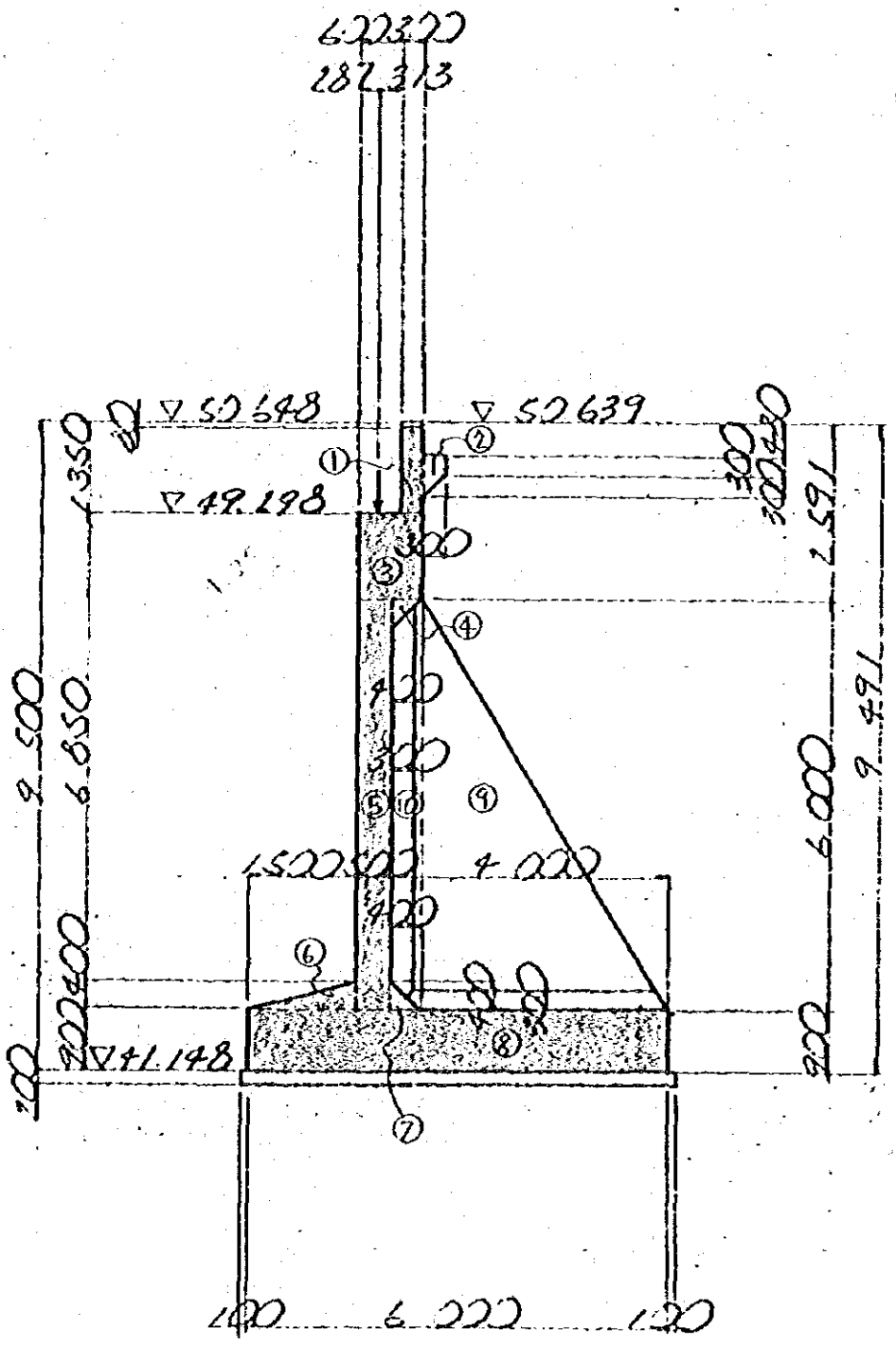

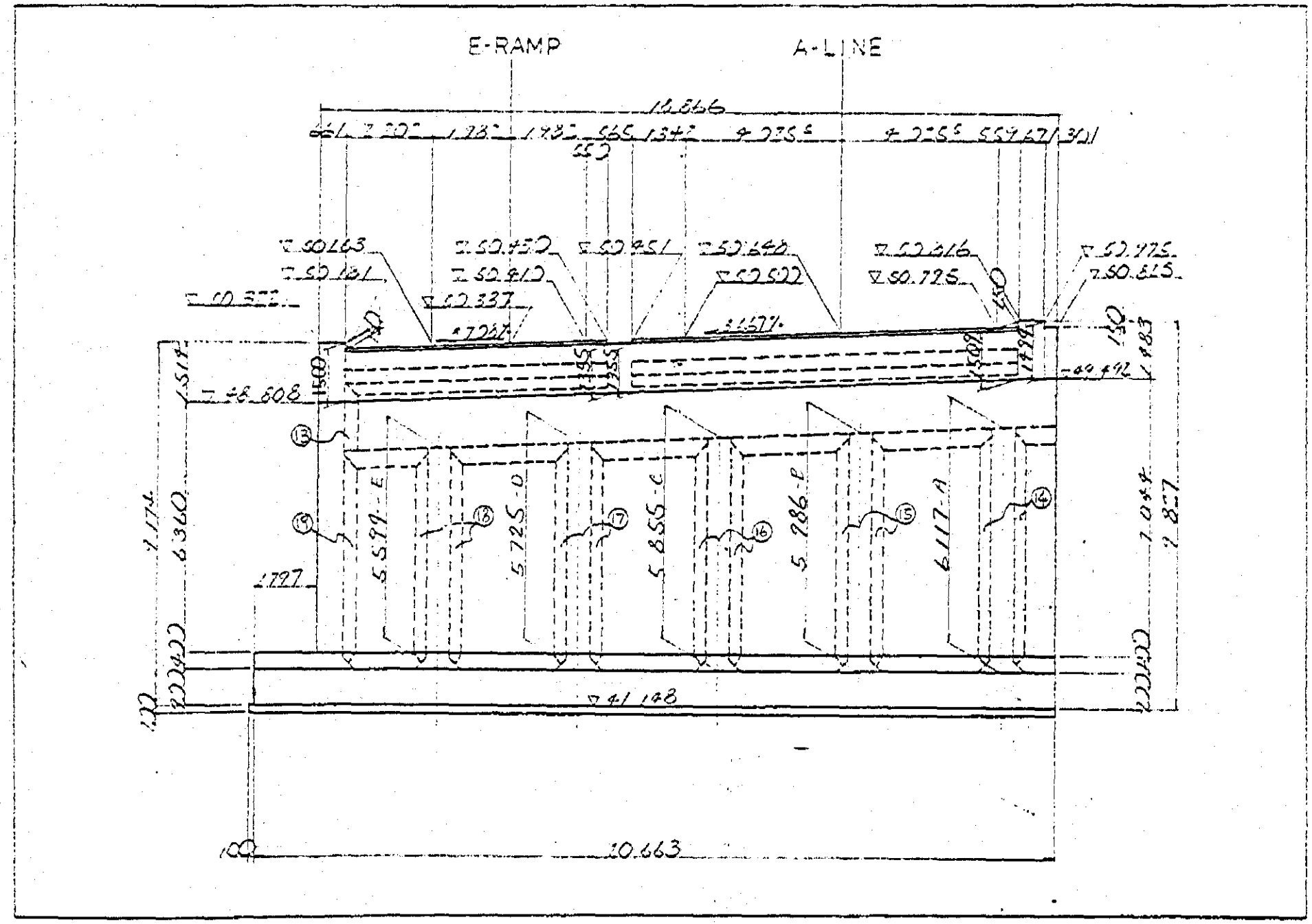
E-RAMP
A-LINE
10.663
5.599-E
5.725-D
5.855-C
5.986-B
6.117-A
41.148
46.608
10.663

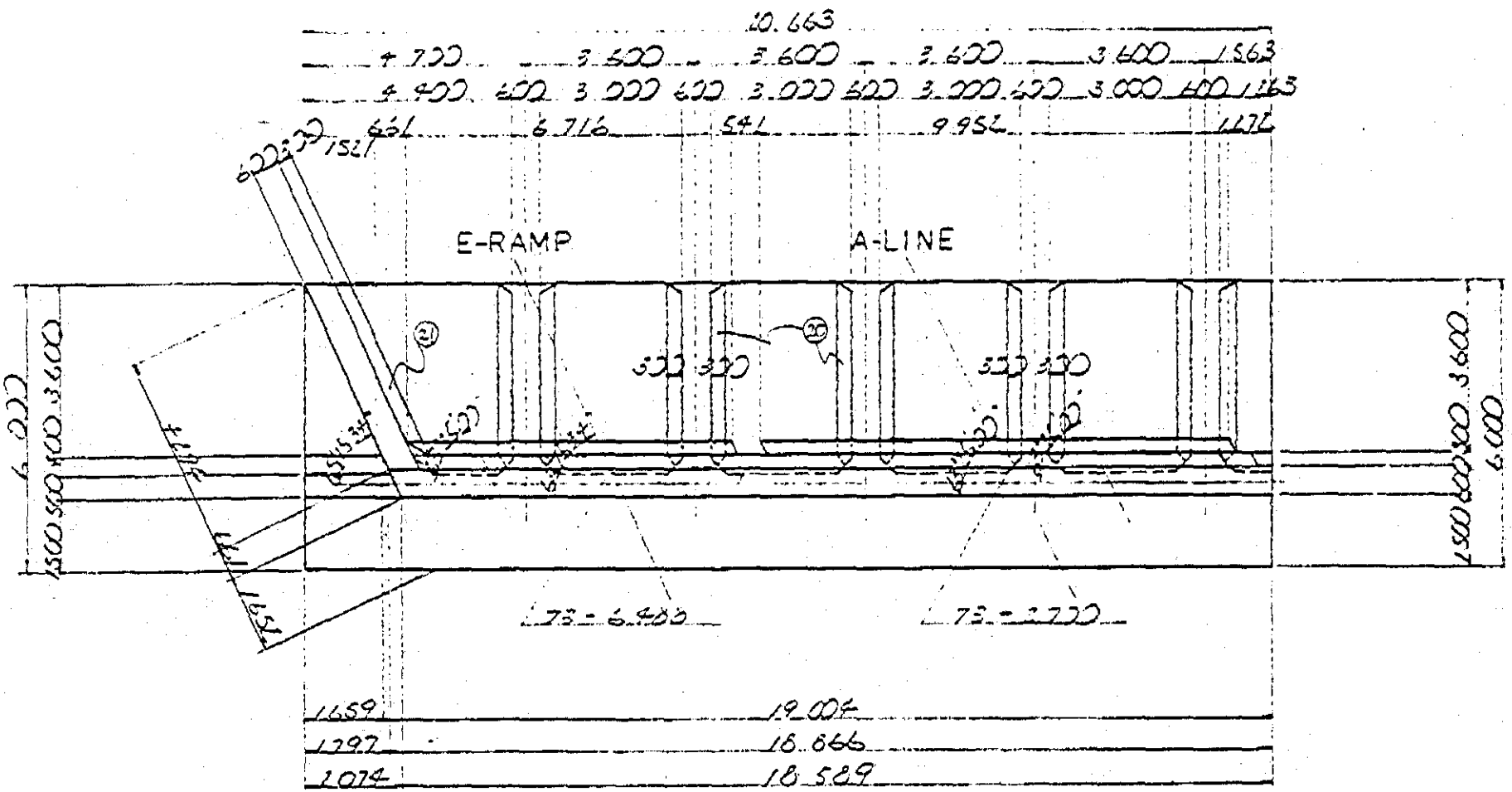
20.663
4.700
3.600
3.600
3.600
3.600
1.563
4.900
400
3.000
600
3.000
600
3.000
400
3.000
400
1.163
661
6.716
541
9.952
1.276
1527
E-RAMP
A-LINE
21
20
300
300
300
300
6.000
3.600
400
500
1500
1500
600
400
3.600
6.000
73 - 6.485
73 - 2.720
1659
19.004
1797
18.866
2074
18.589

WING (LEFT)

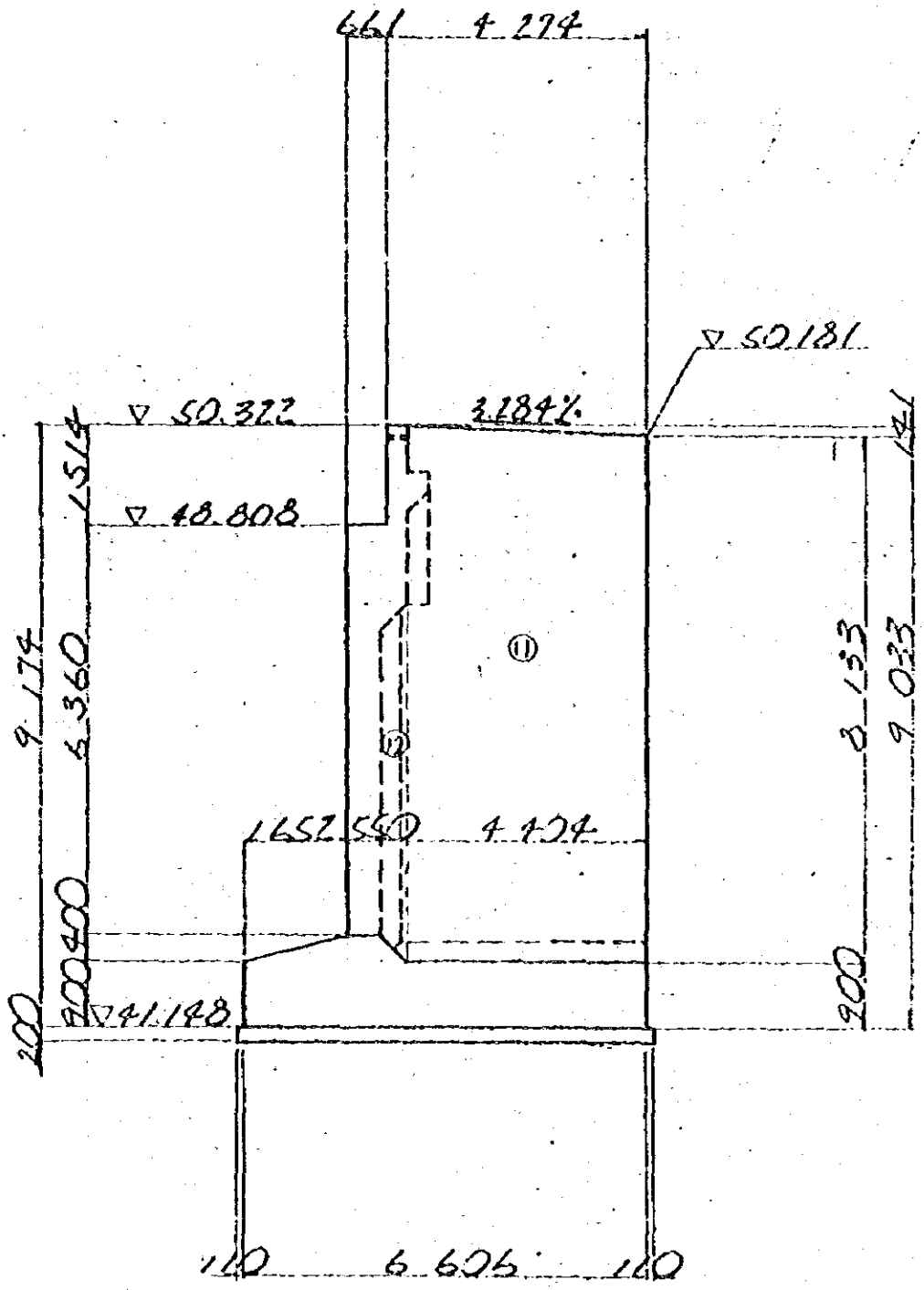
661
4 274
50.181
50.322
3.184%
141
1514
48.808
9 174
6 360
8 133
9 033
⑪
⑤
1652
540
4 474
400
900
200
41.148
110
6 606
110

§ 2 concrete vlume

Parapet

① $\frac{1}{2} \times (1.514 + 1.50) \times 0.661 \times 0.30 = 0.299$

$\frac{1}{2} \times (1.35 + 1.355) \times 6.716 \times 0.30 = 2.725$

$1.355 \times 0.565 \times 0.30 = 0.230$

$\frac{1}{2} \times (1.355 + 1.359) \times 9.952 \times 0.30 = 4.051$

$\frac{1}{2} \times (1.509 + 1.494) \times 0.671 \times 0.30 = 0.302$

$\frac{1}{2} \times (0.301 + 0.451) \times 0.30 \times 1.333 = 0.150$

② $\frac{1}{2} \times (0.30 + 0.60) \times 0.30 \times (6.716 + 9.952) = 2.250$

wall

③ $0.90 \times 1.25 \times \frac{1}{2} \times (18.589 + 19.004) = 21.146$

④ $\frac{1}{2} \times 0.40 \times 0.40 \times \frac{1}{2} \times (18.819 + 19.004) = 1.513$

⑤ $0.50 \times 5.852 \times \frac{1}{2} \times (18.589 + 18.819) = 54.728$

$\frac{1}{2} \times (5.51 + 6.194)$

footing

⑥ $\frac{1}{2} \times 0.40 \times 1.50 \times 20.663 = 6.199$

⑦ $\frac{1}{2} \times 0.40 \times 0.40 \times 20.663 = 1.653$

⑧ $6.00 \times 0.90 \times 20.663 = 111.580$

buttress $n = 5$

⑨A $\frac{1}{2} \times 3.60 \times 6.117 \times 0.60 = 6.606$

⑩$_A$ $\frac{1}{2} \times (6.117 + 5.317) \times 0.40 \times 0.60$ = 1.372

⑨$_B$ $\frac{1}{2} \times 3.60 \times 5.986 \times 0.60$ = 6.465

⑩$_B$ $\frac{1}{2} \times (5.986 + 5.186) \times 0.40 \times 0.60$ = 1.341

⑨$_C$ $\frac{1}{2} \times 3.60 \times 5.855 \times 0.60$ = 6.323

⑩$_C$ $\frac{1}{2} \times (5.855 + 5.055) \times 0.40 \times 0.60$ = 1.309

⑨$_D$ $\frac{1}{2} \times 3.60 \times 5.725 \times 0.60$ = 6.183

⑩$_D$ $\frac{1}{2} \times (5.725 + 4.925) \times 0.40 \times 0.60$ = 1.278

⑨$_E$ $\frac{1}{2} \times 3.60 \times 5.594 \times 0.60$ = 6.042

⑩$_E$ $\frac{1}{2} \times (5.594 + 4.794) \times 0.40 \times 0.60$ = 1.247

wing (left)

⑪ $\frac{1}{2} \times (8.133 + 8.263) \times 3.964 \times 0.60$ = 19.498

⑫ $\frac{1}{2} \times (4.71 + 5.51) \times 0.44 \times 0.60$ = 1.349

haunch

⑬	$\frac{1}{2} \times 0.30 \times 0.30 \times 1.52$	=	0.068
⑭	$\frac{1}{2} \times 0.30 \times 0.30 \times 5.717 \times 2$	=	0.515
⑮	$\frac{1}{2} \times 0.30 \times 0.30 \times 5.586 \times 2$	=	0.503
⑯	$\frac{1}{2} \times 0.30 \times 0.30 \times 5.455 \times 2$	=	0.491
⑰	$\frac{1}{2} \times 0.30 \times 0.30 \times 5.325 \times 2$	=	0.479
⑱	$\frac{1}{2} \times 0.30 \times 0.30 \times 5.194 \times 2$	=	0.467
⑲	$\frac{1}{2} \times 0.30 \times 0.30 \times 4.983$	=	0.224
⑳	$\frac{1}{2} \times 0.30 \times 0.30 \times 4.00 \times 10$	=	1.800
㉑	$\frac{1}{2} \times 0.30 \times 0.30 \times 4.404$	=	0.198

$\Sigma V = 270.584\ m^3$

grand total

$V = 270.584\ m^3$

blinding concrete

$6.20 \times 20.763 \times 0.20 = 25.746\ m^3$

mass concrete

$7.00 \times 1.60 \times 21.663 = 242.626\ m^3$

§ 3 form area

parapet

①	$\frac{1}{2} \times (1.514 + 1.50) \times 0.661$	=	0.996
	$\frac{1}{2} \times (1.35 + 1.355) \times 6.716 \times 2$	=	18.167
	$1.355 \times 0.565 \times 2$	=	1.531
	$\frac{1}{2} \times (1.355 + 1.359) \times 9.952 \times 2$	=	27.01
	$\frac{1}{2} \times (1.509 + 1.494) \times 0.671$	=	1.008
	$(0.301 + 0.451) \times 1.333$	=	1.002
	$0.30 \times 1.333 + 0.33 \times 1.514$	=	0.90
	$-0.60 \times (6.716 + 9.952) + 0.30 \times 0.35$	=	-10.106
②	$0.30 \times (6.716 + 9.952)$	=	5.00
	$0.30 \times \sqrt{2} \times (6.716 + 9.952)$	=	7.072
	$\frac{1}{2} \times (0.30 + 0.60) \times 0.33 \times 3$	=	0.446

wall

③	$1.25 \times (18.589 + 18.013)$	=	45.753
	$0.90 \times 1.25 + 0.991 \times 1.25$	=	2.364
④	$0.10 \times \sqrt{2} \times 3.00 \times 4$	=	1.697
	$0.30 \times \sqrt{2} \times \frac{1}{2} \times (3.00 + 2.40) \times 4$	=	4.582
	$0.10 \times \sqrt{2} \times 2.08$	=	0.294
	$0.30 \times \sqrt{2} \times \frac{1}{2} \times (2.08 + 1.48)$	=	0.755

$0.10 \times \sqrt{2} \times 1.263 + 0.30 \times \sqrt{2} \times \frac{1}{2} \times (1.263 + 0.963) =$ 0.651

$\frac{1}{2} \times 0.40 \times 0.40 + \frac{1}{2} \times 0.40 \times 0.44$ = 0.168

⑤ $\frac{1}{2} \times (5.51 + 6.194) \times 18.589$ = 108.783

$\frac{1}{2} \times (5.317 + 5.186) \times 2.40$ = 12.604

$\frac{1}{2} \times (5.186 + 5.055) \times 2.40$ = 12.289

$\frac{1}{2} \times (5.055 + 4.925) \times 2.40$ = 11.976

$\frac{1}{2} \times (4.925 + 4.794) \times 2.40$ = 11.663

$\frac{1}{2} \times (4.770 + 4.711) \times 1.48$ = 7.016

$\frac{1}{2} \times (5.341 + 5.386) \times 0.963$ = 5.165

0.50×5.51 = 2.755

0.551×6.194 = 3.413

footing.

⑥ $\frac{1}{2} \times 1.50 \times 0.40 \times 2$ = 0.60

⑦ $\frac{1}{2} \times 0.40 \times 0.40 \times 2$ = 0.16

$0.40 \times \sqrt{2} \times (4 \times 2.70 + 1.78 + 1.113)$ = 7.746

⑧ $0.90 \times (6.00 + 20.663) \times 2$ = 47.993

buttress

⑨-A $\frac{1}{2} \times 3.60 \times 6.117 \times 2$ = 22.021

$\sqrt{3.60^2 + 6.117^2} \times 0.60$ = 4.259

⑩-A $\frac{1}{2} \times (6.117 + 5.317) \times 0.40 \times 2$ = 4.574

⑨$_B$	$\frac{1}{2} \times 3.60 \times 5.986 \times 2$	=	21.55
	$\sqrt{3.60^2 + 5.986^2} \times 0.60$	=	4.191
⑩$_B$	$\frac{1}{2} \times (5.986 + 5.186) \times 0.40 \times 2$	=	4.469
⑨$_C$	$\frac{1}{2} \times 3.60 \times 5.855 \times 2$	=	21.078
	$\sqrt{3.60^2 + 5.855^2} \times 0.60$	=	4.124
⑩$_C$	$\frac{1}{2} \times (5.855 + 5.055) \times 0.40 \times 2$	=	4.364
⑨$_D$	$\frac{1}{2} \times 3.60 \times 5.725 \times 2$	=	20.61
	$\sqrt{3.60^2 + 5.725^2} \times 0.60$	=	4.058
⑩$_D$	$\frac{1}{2} \times (5.725 + 4.925) \times 0.40 \times 2$	=	4.26
⑨$_E$	$\frac{1}{2} \times 3.60 \times 5.594 \times 2$	=	20.138
	$\sqrt{3.60^2 + 5.594^2} \times 0.60$	=	3.991
⑩$_E$	$\frac{1}{2} \times (5.594 + 4.794) \times 0.40 \times 2$	=	4.155

wing (left)

⑪	$\frac{1}{2} \times (8.113 + 8.263) \times 3.964 \times 2$	=	64.919
	-0.33×2.206	= −	0.728
	0.661×8.113	=	5.363
⑫	$\frac{1}{2} \times (5.51 + 4.71) \times 0.44$	=	2.248
	$\frac{1}{2} \times (5.51 + 5.31) \times 0.11$	=	0.595

haunch

⑬	$0.30 \times \sqrt{2} \times 1.52$	=	0.645
⑭	$0.30 \times \sqrt{2} \times 5.717 \times 2$	=	4.851
⑮	$0.30 \times \sqrt{2} \times 5.586 \times 2$	=	4.740
⑯	$0.30 \times \sqrt{2} \times 5.455 \times 2$	=	4.629
⑰	$0.30 \times \sqrt{2} \times 5.325 \times 2$	=	4.518
⑱	$0.30 \times \sqrt{2} \times 5.194 \times 2$	=	4.407
⑲	$0.30 \times \sqrt{2} \times 4.983$	=	2.114
⑳	$0.30 \times \sqrt{2} \times 4.00 \times 10$	=	16.971
	$\frac{1}{2} \times 0.30 \times 0.30 \times 10$	=	0.45
㉑	$0.30 \times \sqrt{2} \times 4.404$	=	1.868
	$\frac{1}{2} \times 0.30 \times 0.30$	=	0.045
	ΣA	=	606.925 m^2

blinding concrete form area

$(6.20 + 20.763) \times 2 \times 0.20$ = 10.785 m^2
$(7.00 + 21.663) \times 2 \times 1.60$ 91.722 "

type-A (plane formworks)

550.426 m^2

type-E (rough finish formworks)

159.01 m^2

§ 4 EARTH WORKS

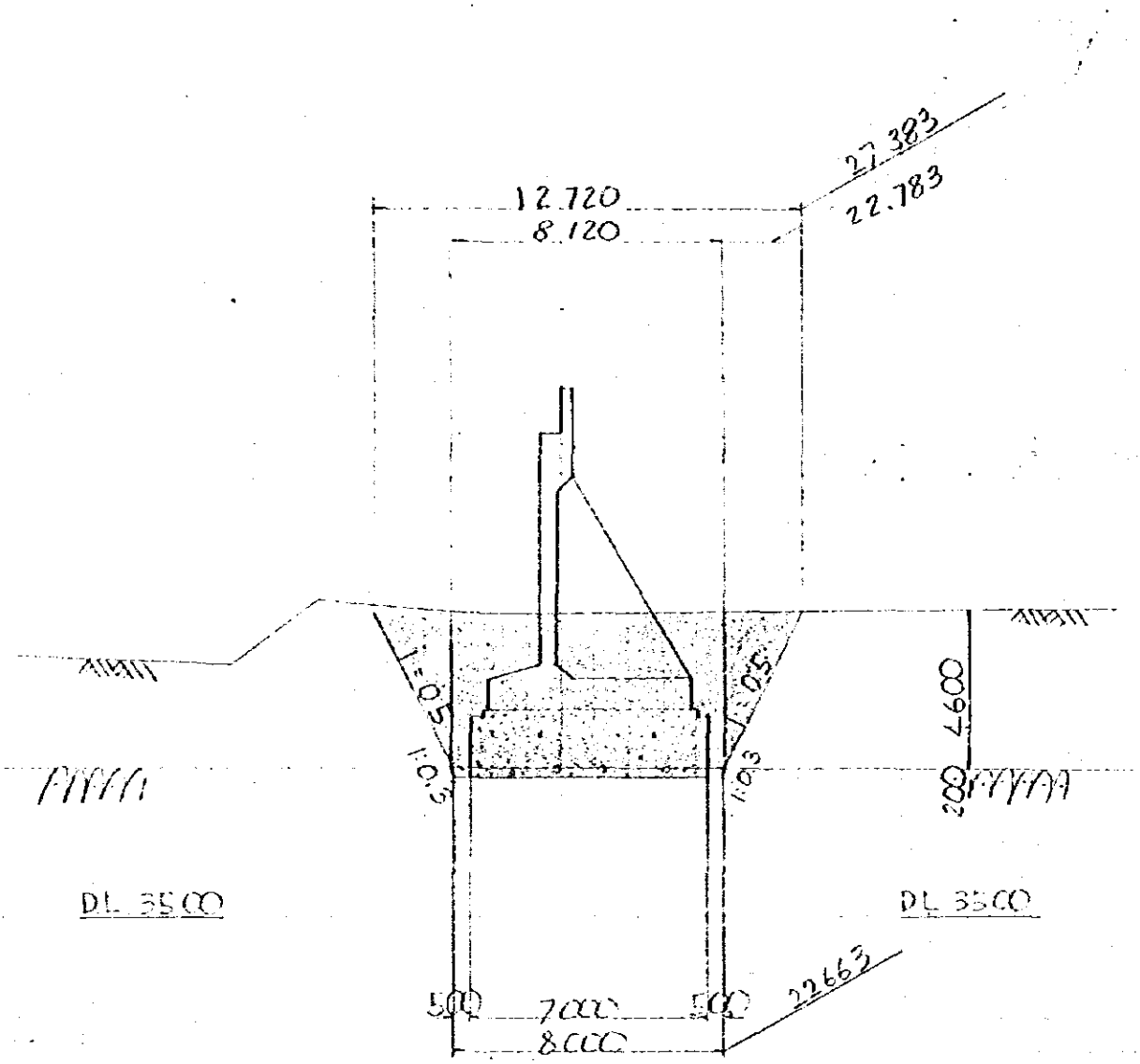

(1) EXCAVATION

common

$\frac{1}{6} \times 4.60 \times [12.92 \times 27.383 + (12.92 + 8.12)$
$(27.383 + 22.783) + 8.12 \times 22.783] = 1210.39 \ m^3$

ROCK $\frac{1}{6} \times 0.2 \times [8.12 \times 22.783 + (8.12 + 8.10)(22.783 + 22.163) + 8.10 \times 22.163] = 36.63 \ m^3$

wall

$0.90 \times 1.90 \times 18.866 = 32.261$

buttress

$\frac{1}{2} \times (2.86 + 4.00) \times 1.90 \times 0.60 \times 5 = 19.551$

$1.90 \times 4.404 \times 0.60 = 5.021$

$-\frac{1}{2} \times 0.40 \times 0.40 \times 0.60 \times 6 = -0.288$

haunch $= 1.998$

$\frac{1}{2} \times 0.30 \times 0.30 \times 1.80 \times 11 = 0.891$

footing $= 119.432$

blinding concrete $= 25.746$

mass concrete $= 242.626$

$\Sigma V = 447.238 \ m^3$

(2) BACK FILL

$1247.02 - 447.238 = 799.78 \ m^3$

§§ 5. B-LINE-1. B.R.

A1 - ABUTMENT

§ 1 STRUCTURAL FIGURE

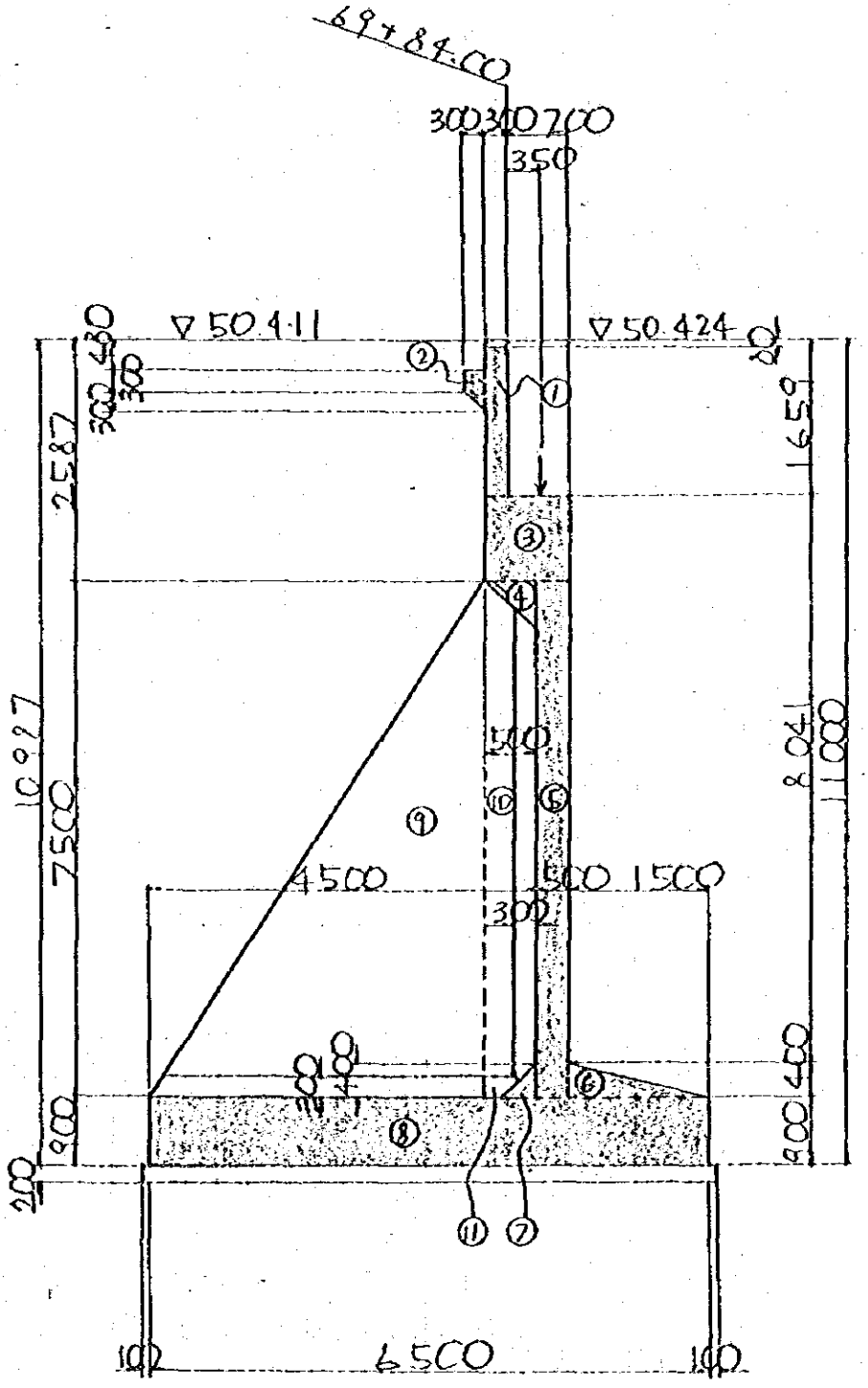

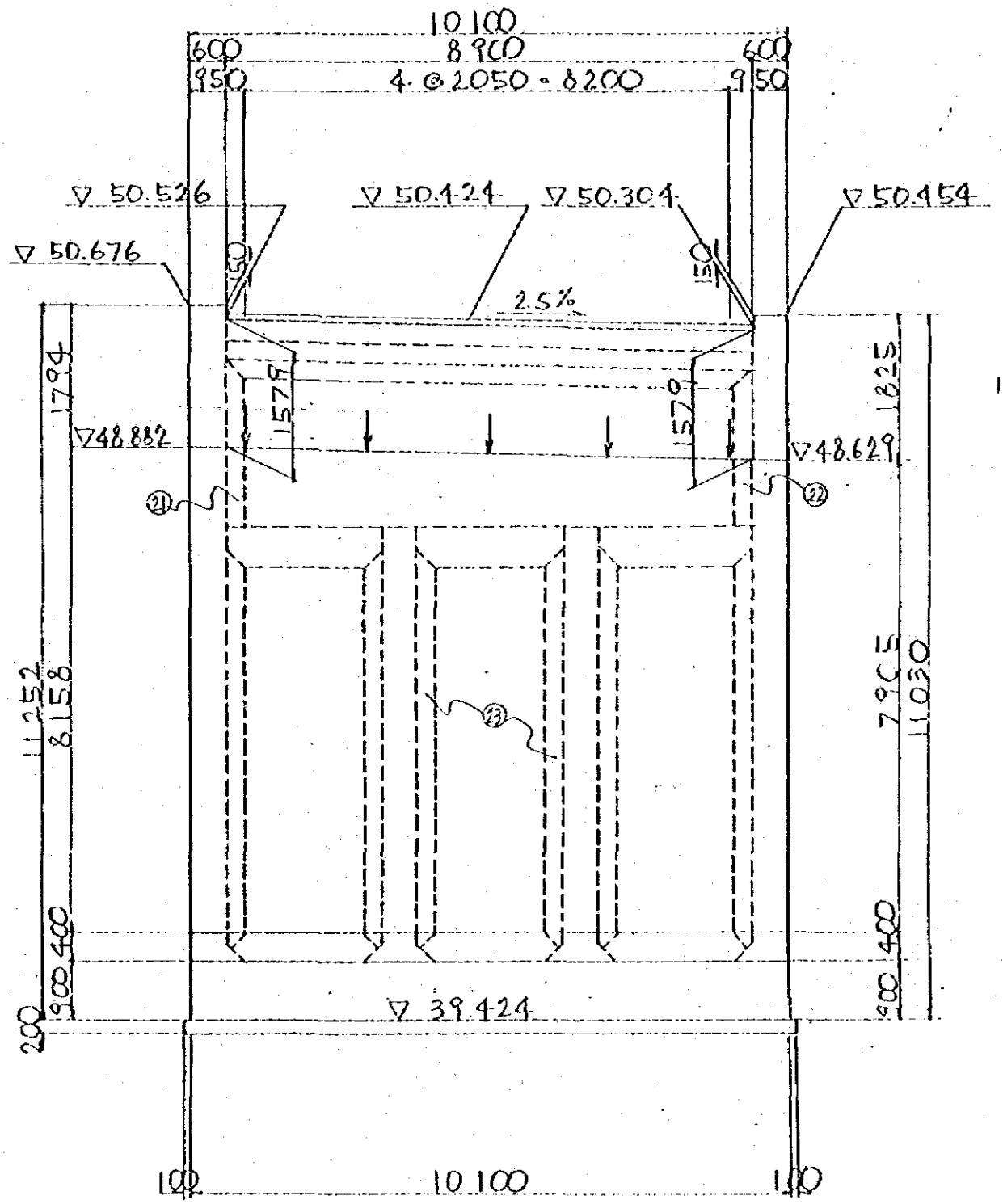
10100
600
8900
600
950
4 @ 2050 = 8200
950
▽ 50.526
▽ 50.424
▽ 50.304
▽ 50.454
▽ 50.676
50
10
2.5%
1794
1578
1578
1825
▽48.882
▽48.629
21
22
23
11252
8158
7905
11030
400
900
400
900
200
▽ 39.424
100
10100
100

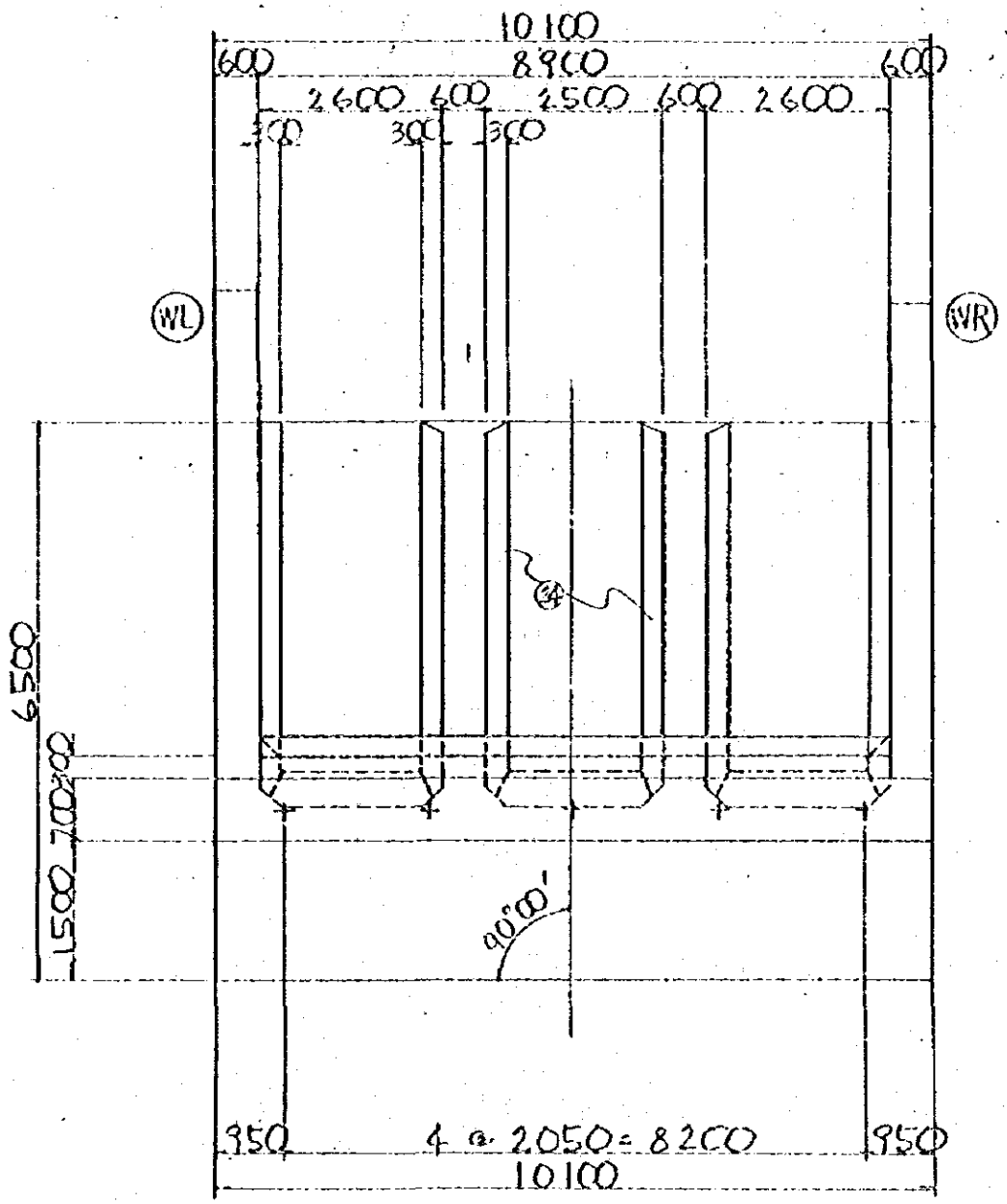
10100
600
8900
600
2600
600
2500
600
2600
300
300
300
WL
WR
6500
1500
700
90°00'
950
4 @ 2050 = 8200
950
10100

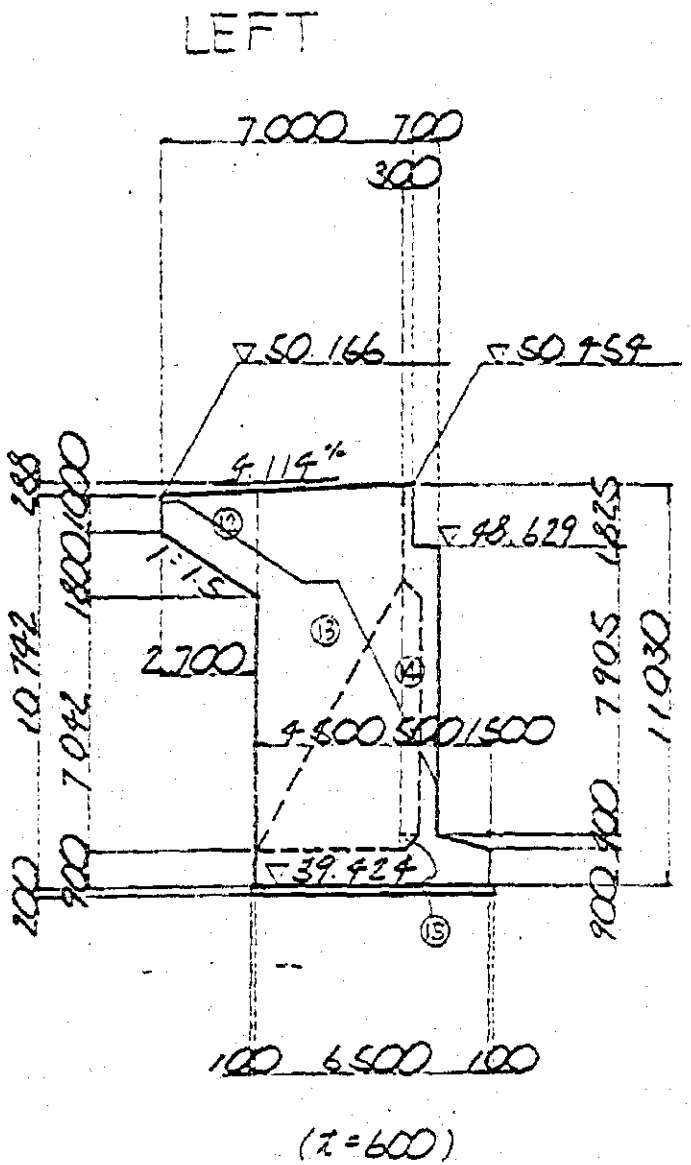
LEFT
7000
700
300
50.166
50.459
4.114%
48.629
1:1.5
2700
4500
500
1500
39.424
100
6500
100
(τ=600)

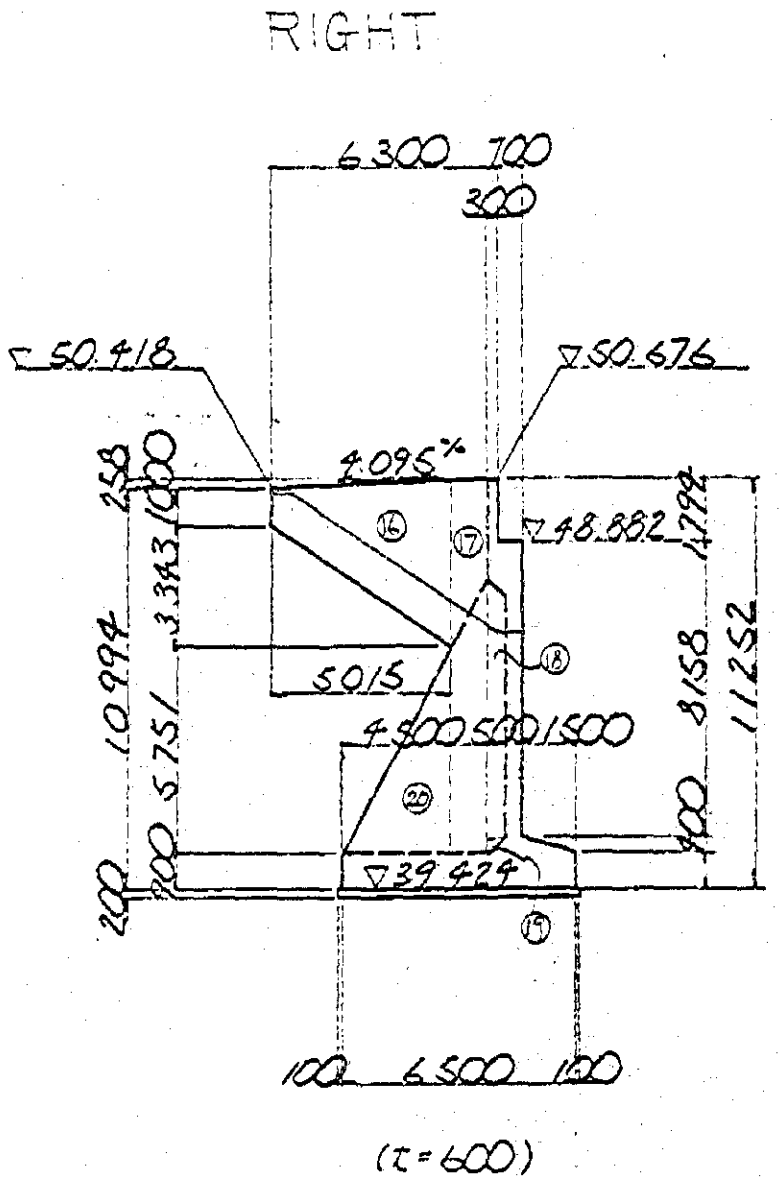
RIGHT
6300
700
300
50.418
50.676
4.095%
48.882
5015
4500
500
1500
39.429
100
6500
100
(τ=600)

§ 2 concrete volume

Parapet

① $\frac{1}{2} \times (1.794 + 1.809) \times 0.60 \times 0.30$ = 0.324

$1.579 \times 8.90 \times 0.30$ = 4.216

$\frac{1}{2} \times (1.809 + 1.825) \times 0.60 \times 0.30$ = 0.327

② $\frac{1}{2} \times (0.30 + 0.60) \times 0.30 \times 8.90$ = 1.202

wall

③ $\frac{1}{2} \times (1.058 + 0.805) \times 10.10 \times 1.00$ = 9.408

④ $\frac{1}{2} \times 0.50 \times 0.50 \times 10.10$ = 1.263

⑤ $0.50 \times 7.50 \times 10.10$ = 37.875

footing

⑥ $\frac{1}{2} \times 1.50 \times 0.40 \times 10.10$ = 3.03

⑦ $\frac{1}{2} \times 0.40 \times 0.40 \times 10.10$ = 0.808

⑧ $6.50 \times 0.90 \times 10.10$ = 59.085

buttress

⑨ $\frac{1}{2} \times 7.50 \times 4.00 \times 0.60 \times 2$ = 18.00

⑩ $\frac{1}{2} \times (7.10 + 6.60) \times 0.50 \times 0.60 \times 2$ = 4.11

⑪ $\frac{1}{2} \times (0.10 + 0.50) \times 0.40 \times 0.60 \times 2$ = 0.144

wing (left)

⑫ $\frac{1}{2} \times (1.00 + 2.911) \times 2.70 \times 0.60 = 3.168$

⑬ $\frac{1}{2} \times (9.953 + 10.118) \times 4.00 \times 0.60 = 24.085$

⑭ $\frac{1}{2} \times (7.10 + 6.60) \times 0.50 \times 0.60 = 2.055$

⑮ $\frac{1}{2} \times (0.10 + 0.50) \times 0.40 \times 0.60 = 0.072$

wing (right)

⑯ $\frac{1}{2} \times (1.00 + 4.548) \times 5.015 \times 0.60 = 8.347$

⑰ $\frac{1}{2} \times (10.299 + 10.339) \times 0.985 \times 0.60 = 6.099$

⑱ $\frac{1}{2} \times (7.10 + 6.60) \times 0.50 \times 0.60 = 2.055$

⑲ $\frac{1}{2} \times (0.10 + 0.50) \times 0.40 \times 0.60 = 0.072$

⑳ $\frac{1}{2} \times 5.751 \times 3.015 \times 0.60 = 5.202$

haunch

㉑ $\frac{1}{2} \times 0.30 \times 0.30 \times 1.637 = 0.074$

㉒ $\frac{1}{2} \times 0.30 \times 0.30 \times 1.384 = 0.062$

㉓ $\frac{1}{2} \times 0.30 \times 0.30 \times 6.90 \times 6 = 1.863$

㉔ $\frac{1}{2} \times 0.30 \times 0.30 \times 4.40 \times 6 = 1.188$

$\Sigma V = 194.134\ m^3$

grand total

$V = 194.134\ m^3$

blinding concrete

$6.70 \times 10.30 \times 0.20 = 13.802\ m^3$

Mass concrete $6.70 \times 10.30 \times 0.50 = 34.505\ m^3$

§ 3 form area

palapet

① $\frac{1}{2} \times (1.794 + 1.809) \times 0.60$ = 1.081

1.579×8.90 = 14.053

1.579×8.90 = 14.053

$-0.60 \times 8.90 + 0.30 \times 0.579 \times 2$ = − 5.687

$\frac{1}{2} \times (1.809 + 1.825) \times 0.60$ = 1.09

$0.30 \times (1.794 + 1.825)$ = 1.086

$0.23 \times 0.30 \times 2$ = 0.138

② 0.30×8.90 = 2.67

$0.30 \times \sqrt{2} \times 8.90$ = 3.776

wall

③ $\frac{1}{2} \times (1.058 + 0.805) \times 10.10$ = 9.408

$\frac{1}{2} \times (1.036 + 0.828) \times 8.30$ = 7.736

$1.00 \times (1.058 + 0.805)$ = 1.863

④ $0.20 \times \sqrt{2} \times (2.60 \times 2 + 2.50)$ = 2.178

$0.30 \times \sqrt{2} \times \frac{1}{2} \times (7.70 + 5.90)$ = 2.885

$\frac{1}{2} \times 0.50 \times 0.50 \times 2$ = 0.25

⑤ 7.50×10.10 = 75.75

$6.60 \times (2.00 \times 2 + 1.90)$ = 38.94

$0.50 \times 7.50 \times 2 = 7.50$

footing

⑥ $\frac{1}{2} \times 1.50 \times 0.40 \times 2 = 0.60$

⑦ $\frac{1}{2} \times 0.40 \times 0.40 \times 2 = 0.16$

⑧ $(6.50 + 10.10) \times 2 \times 0.90 = 29.88$

buttress

⑨ $\frac{1}{2} \times 7.20 \times 3.84 \times 2 \times 2 = 55.296$

$\sqrt{4.00^2 + 7.50^2} \times 0.60 \times 2 = 10.20$

⑩ $\frac{1}{2} \times (7.20 + 7.00) \times 0.20 \times 2 \times 2 = 5.68$

wing (left)

⑫ $\frac{1}{2} \times (1.00 + 2.911) \times 2.70 \times 2 = 10.56$

$(1.00 + \sqrt{1.80^2 + 2.70^2}) \times 0.60 = 2.547$

⑬ $\frac{1}{2} \times (9.953 + 10.118) \times 4.00 \times 2 = 80.284$

$-0.30 \times (4.00 + 2.237) = -1.871$

$0.60 \times 7.042 = 4.225$

⑭ $\frac{1}{2} \times (7.10 + 6.60) \times 0.50 = 3.425$

$\frac{1}{2} \times (7.20 + 7.00) \times 0.20 = 1.42$

⑮ $\frac{1}{2} \times (0.10 + 0.50) \times 0.40 = 0.12$

wing (right)

⑯ $\frac{1}{2} \times (1.00 + 4.548) \times 5.015 \times 2 = 27.823$

$(1.00 + \sqrt{3.343^2 + 5.015^2}) \times 0.60 = 4.216$

⑰ $\frac{1}{2} \times (10.299 + 10.339) \times 0.985 \times 2 = 20.328$

$-0.30 \times (0.985 + 1.984) = -0.891$

⑱ $\frac{1}{2} \times (7.10 + 6.60) \times 0.50 = 3.425$

$\frac{1}{2} \times (7.20 + 7.00) \times 0.20 = 1.42$

⑲ $\frac{1}{2} \times (0.10 + 0.50) \times 0.40 = 0.12$

⑳ $\frac{1}{2} \times 5.751 \times 3.015 = 8.670$

$\frac{1}{2} \times 5.451 \times 2.858 = 7.789$

$\sqrt{5.751^2 + 3.015^2} \times 0.60 = 3.896$

haunch

(21)	$0.30 \times \sqrt{2} \times 1.637$	=	0.695
(22)	$0.30 \times \sqrt{2} \times 1.384$	=	0.587
(23)	$0.30 \times \sqrt{2} \times 6.90 \times 6$	=	17.565
(24)	$0.30 \times \sqrt{2} \times 4.40 \times 6$	=	11.201
	$\frac{1}{2} \times 0.30 \times 0.30 \times 2$	=	0.09
	$\frac{1}{2} \times 0.30 \times 0.34 \times 4$	=	0.204

$\Sigma A = 488.434\ m^2$

blinding concrete form area

$(6.70 + 10.30) \times 2 \times 0.20$	=	$6.80\ m^2$
$(6.70 + 10.30) \times 2 \times 0.50$	=	17.00

grand total

type - A (plane formworks)

$A = 457.794\ m^2$

type - E (rough finish formworks)

$A = 54.44\ m^2$

§ 4 EARTH WORKS

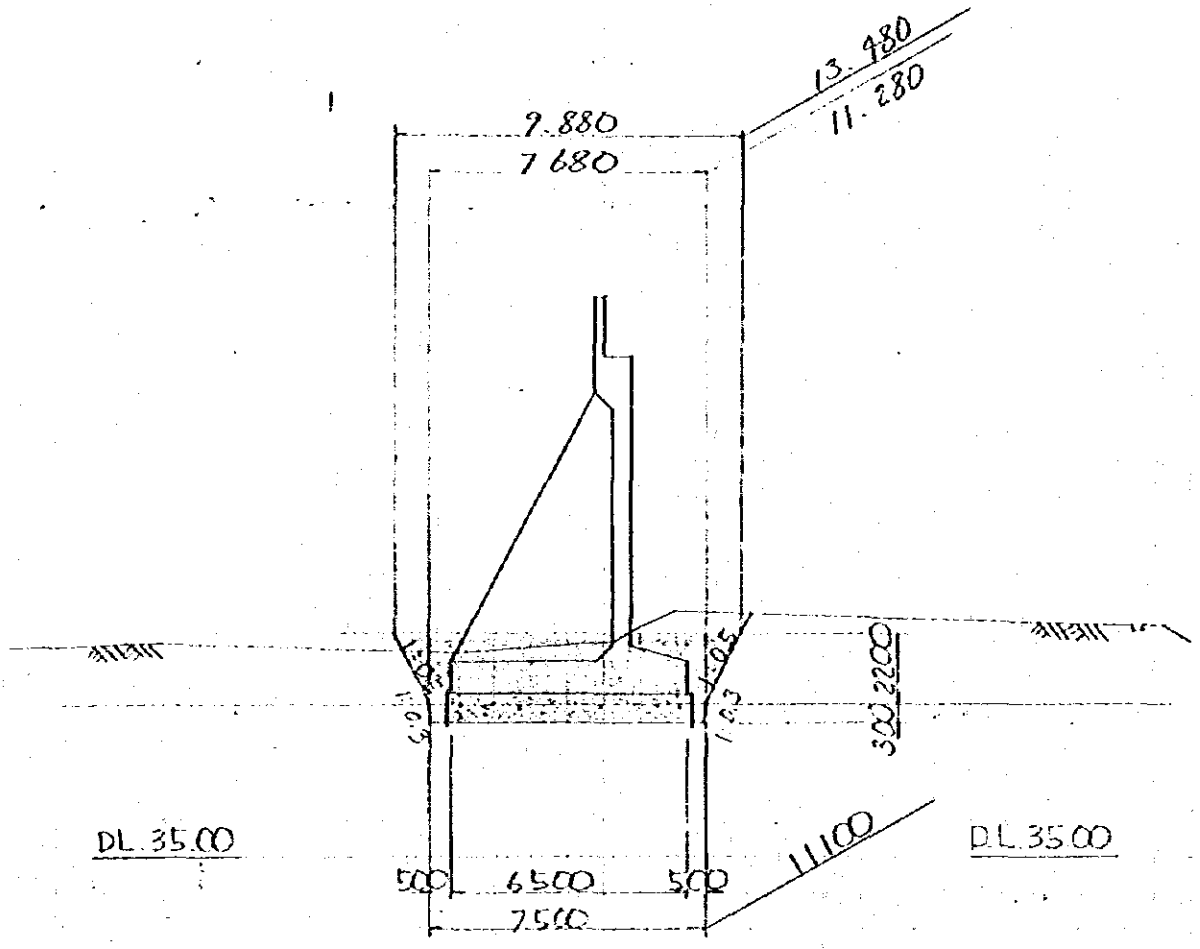

(1) EXCAVATION

common

$\frac{1}{6} \times 2.20 \times [9.88 \times 13.48 + (9.88 + 7.68)(13.48 + 11.28) + 7.68 \times 11.28]$ = 240.62 m^3

ROCK $\frac{1}{6} \times 0.3 \times [7.68 \times 11.28 + (7.68 + 7.50)(11.28 + 11.10) + 7.50 \times 11.10]$ = 25.48 m^3

wall

$0.50 \times 0.90 \times 10.10$ = 4.545

buttress

$\frac{1}{2} \times (4.02 + 4.50) \times 0.90 \times 0.60 \times 3$ = 6.901

$0.90 \times 4.50 \times 0.60$ = 2.43

$-\frac{1}{2} \times 0.40 \times 0.40 \times 0.60 \times 4$ = − 0.192

haunch

$\frac{1}{2} \times 0.30 \times 0.30 \times 0.80 \times 6$ = 0.216

= 1.188

footing = 62.923

blinding concrete

= 13.802

ΣV = 91.813 m^3

(2) BACK FILL

266.10 − 91.813 = 174.29 m^3

A_2 - ABUTMENT

§ 1 STRUCTURAL FIGURE

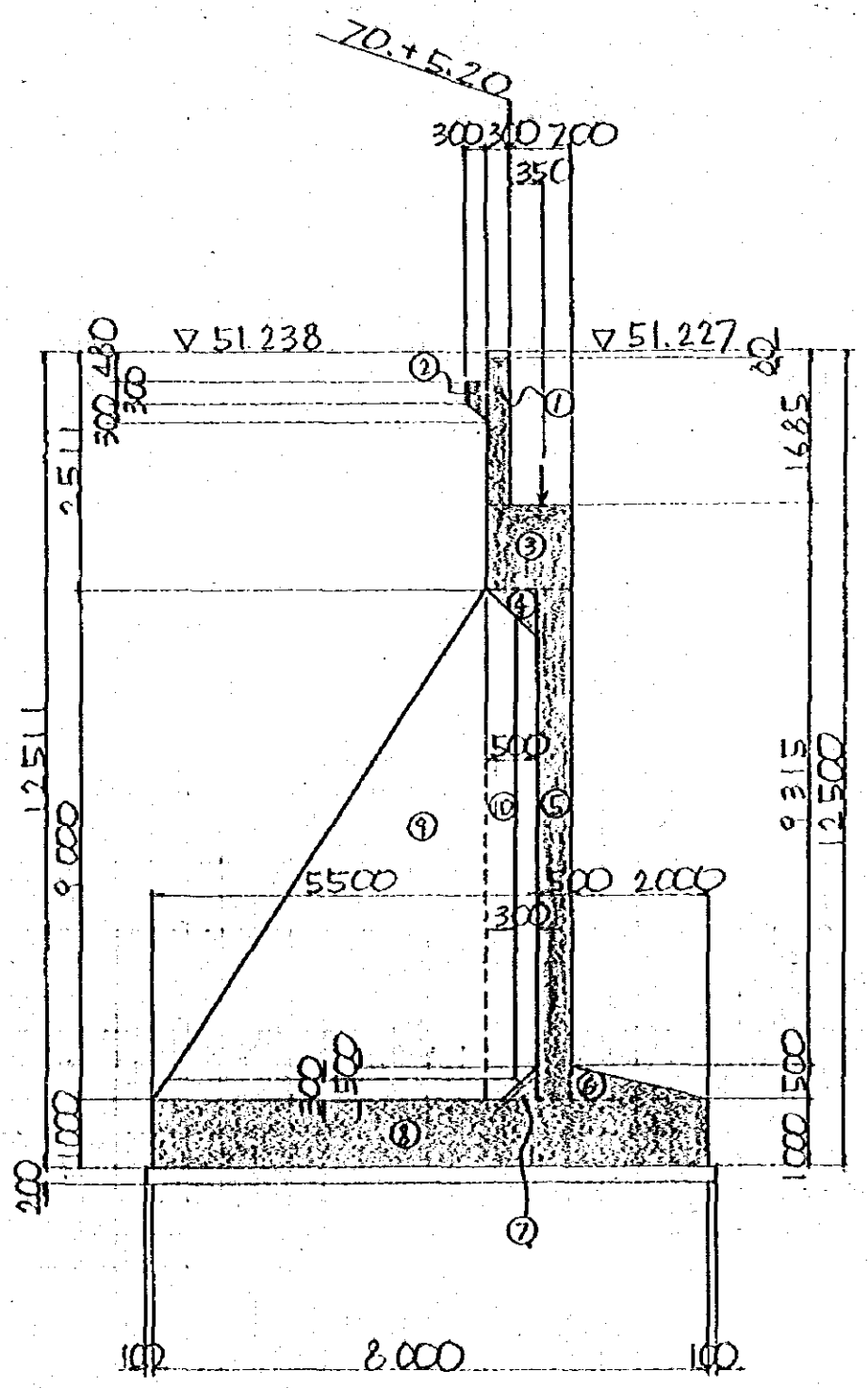

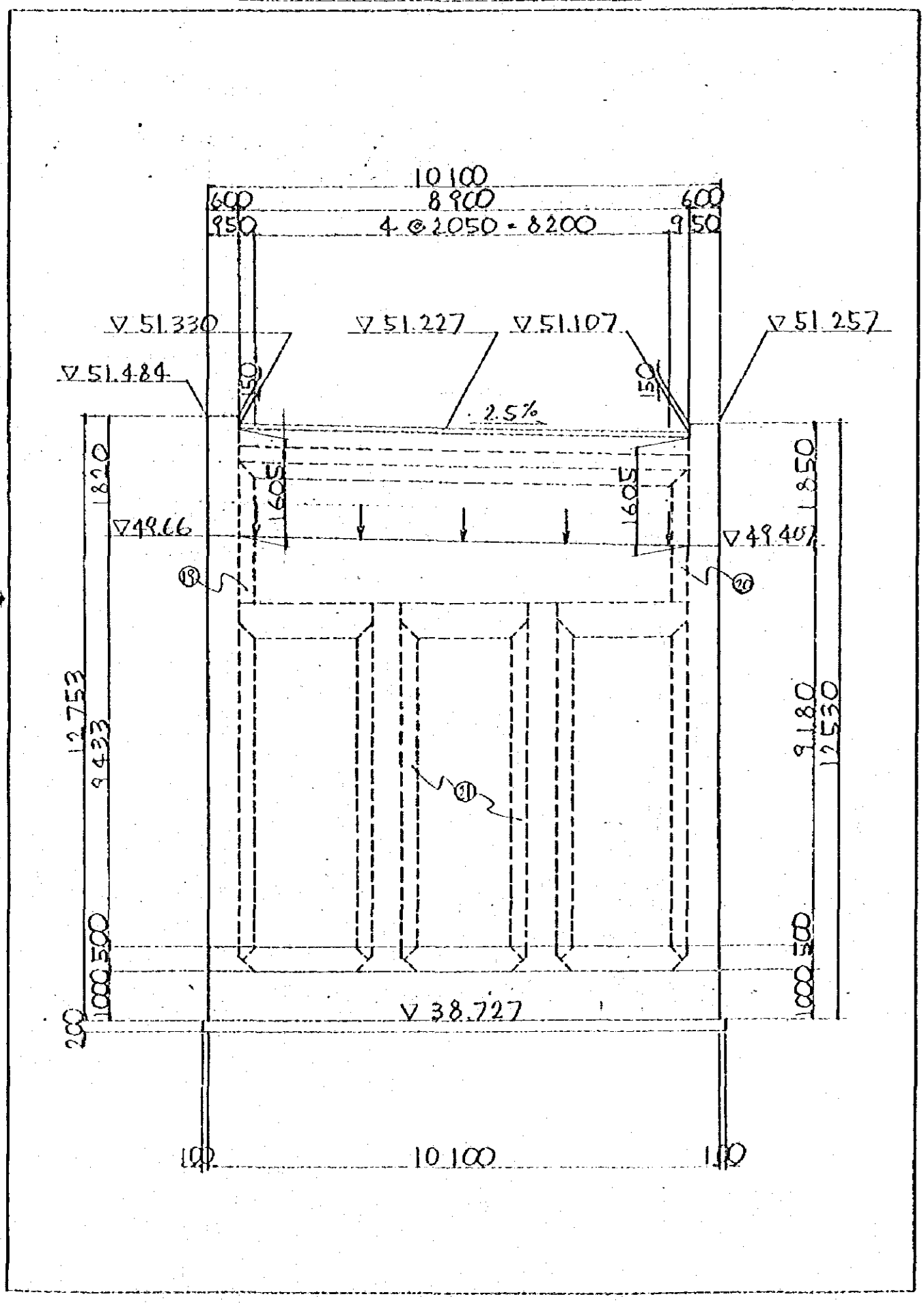
10100
600
8900
600
950
4 @ 2050 = 8200
950
▽51.330
▽51.227
▽51.107
▽51.257
▽51.484
150
150
2.5%
1820
1605
1605
1850
▽49.66
▽49.407
18
20
12753
9433
21
9180
12530
1000
500
500
1000
200
▽38.727
100
10100
100

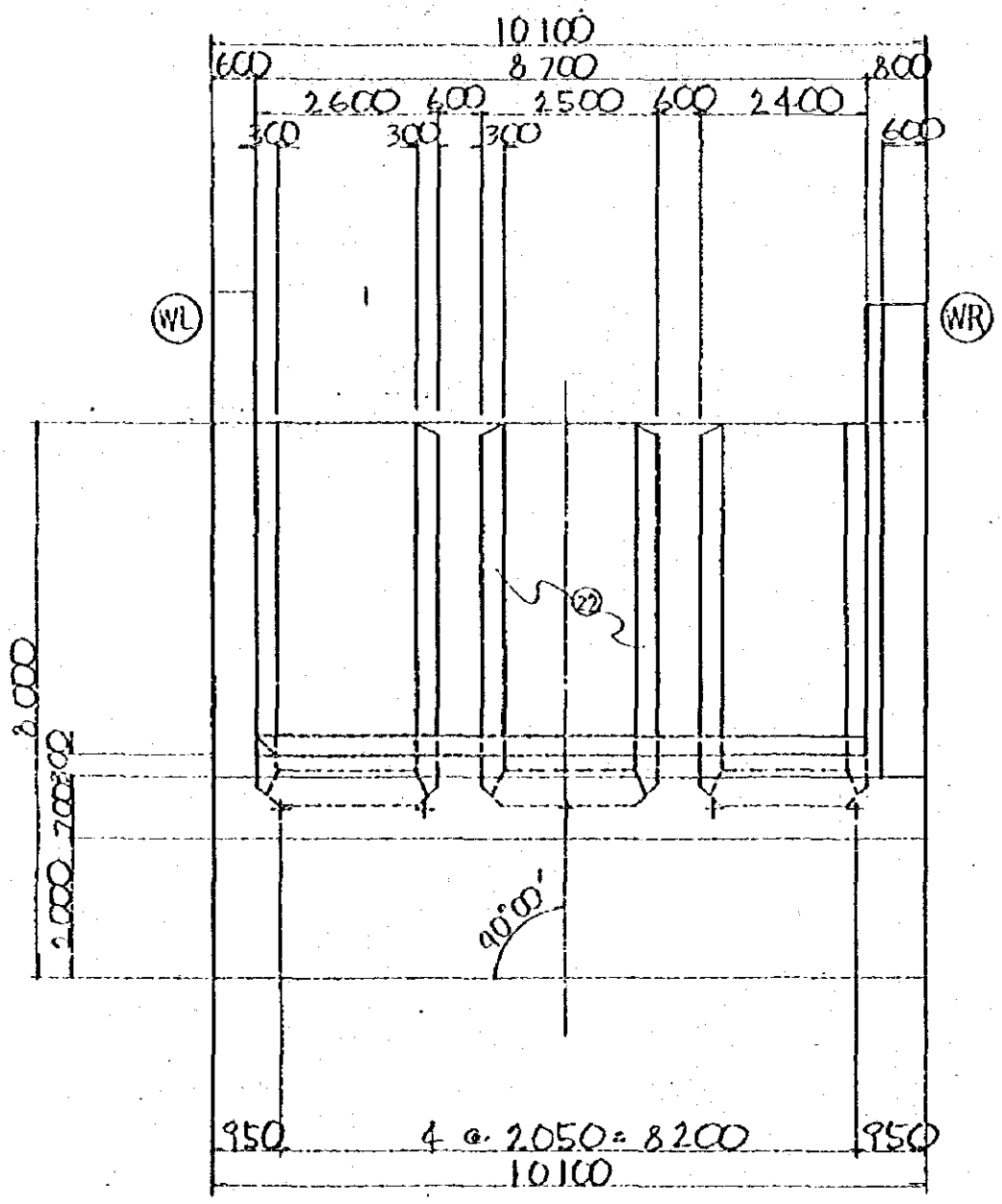
10 100
600
8 700
800
2600
600
2500
600
2400
300
300
300
600
WL
WR
22
3000
2000
700
90°00'
950
4 @ 2050 = 8200
950
10100

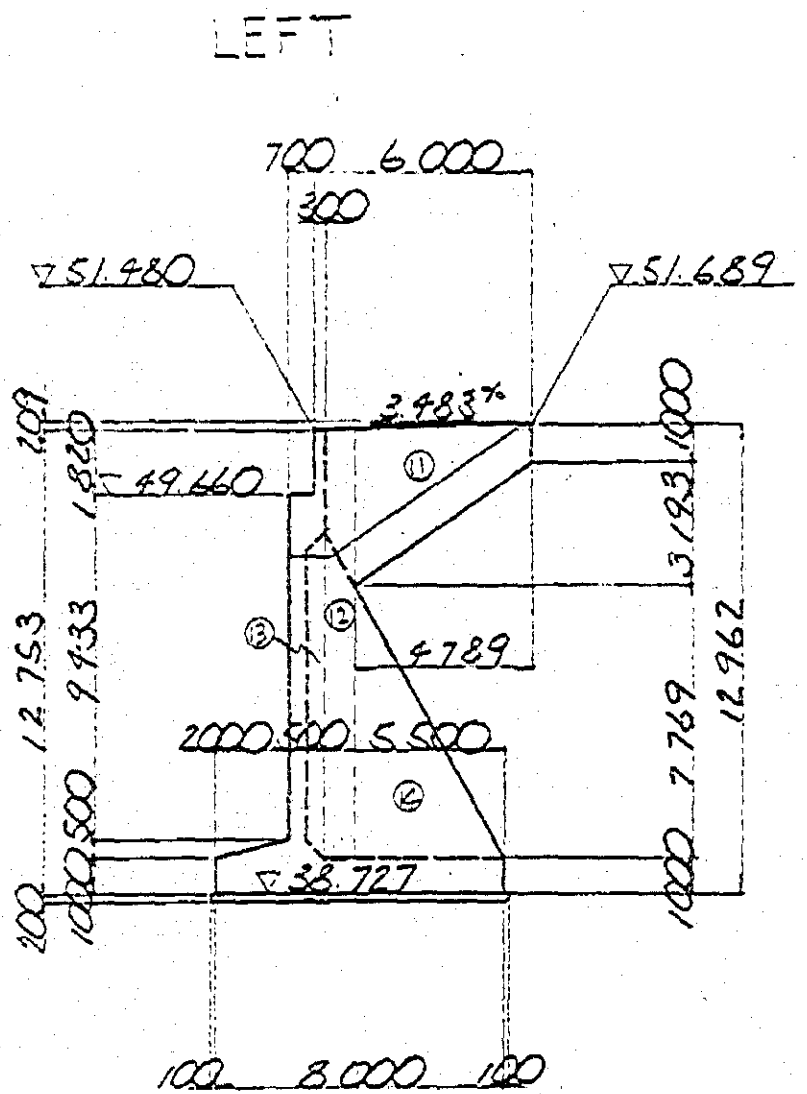
LEFT
700
6.000
300
51.480
51.689
3.483%
49.460
1.820
2.09
12.753
9.933
1000
3.193
4.789
7.769
12.962
2000
500
5.500
500
1000
200
38.727
100
8.000
100

(t = 600)

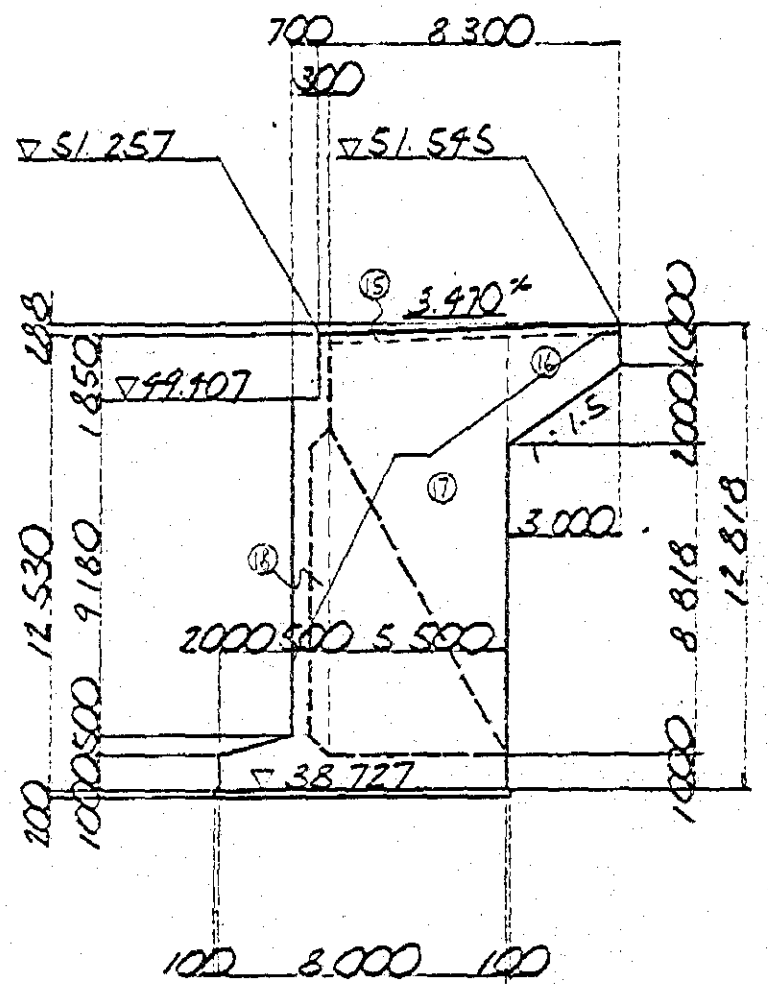
RIGHT
700
8.300
300
51.257
51.545
3.470%
49.407
1.850
488
12.530
9.180
1.5
3.000
8.818
12.818
2000
500
5.500
500
1000
200
38.727
100
8.000
100

(t = 800)

§ 2 concrete volume

Parapet

① $\frac{1}{2} \times (1.82 + 1.835) \times 0.60 \times 0.30$ = 0.329

$1.605 \times 8.90 \times 0.30$ = 4.285

$\frac{1}{2} \times (1.835 + 1.850) \times 0.60 \times 0.30$ = 0.332

② $\frac{1}{2} \times (0.30 + 0.60) \times 0.30 \times 8.70$ = 1.175

wall

③ $\frac{1}{2} \times (0.933 + 0.68) \times 10.10 \times 1.00$ = 8.146

④ $\frac{1}{2} \times 0.50 \times 0.50 \times 10.10$ = 1.263

⑤ $0.50 \times 9.00 \times 10.10$ = 45.45

footing

⑥ $\frac{1}{2} \times 2.00 \times 0.50 \times 10.10$ = 5.05

⑦ $\frac{1}{2} \times 0.50 \times 0.50 \times 10.10$ = 1.263

⑧ $8.00 \times 1.00 \times 10.10$ = 80.80

buttress

⑨ $\frac{1}{2} \times 9.00 \times 5.00 \times 0.60 \times 2$ = 27.00

⑩ $\frac{1}{2} \times (9.00 + 8.00) \times 0.50 \times 0.60 \times 2$ = 5.10

wing (left)

⑪ $\frac{1}{2} \times (1.00 + 4.026) \times 4.789 \times 0.60$ = 7.221

⑫ $\frac{1}{2} \times (11.785 + 11.763) \times 0.911 \times 0.60$ = 6.438

⑬ $\frac{1}{2} \times (9.00 + 8.00) \times 0.50 \times 0.60$ = 2.55

⑭ $\frac{1}{2} \times 7.769 \times 4.089$ = 15.884

wing (right)

⑮ $8.00 \times 0.63 \times 0.60$ = 3.024

⑯ $\frac{1}{2} \times (0.37 + 2.266) \times 3.00 \times 0.80$ = 3.163

⑰ $\frac{1}{2} \times (11.084 + 10.911) \times 5.00 \times 0.80$ = 43.99

⑱ $\frac{1}{2} \times (9.00 + 8.00) \times 0.50 \times 0.80$ = 3.40

haunch

⑲ $\frac{1}{2} \times 0.30 \times 0.30 \times 1.538$ = 0.069

⑳ $\frac{1}{2} \times 0.30 \times 0.30 \times 1.285$ = 0.058

㉑ $\frac{1}{2} \times 0.30 \times 0.30 \times 8.30 \times 6$ = 2.241

㉒ $\frac{1}{2} \times 0.30 \times 0.30 \times 5.30 \times 6$ = 1.431

ΣV = 269.662 m^3

grand total

V = 269.662 m^3

blinding concrete

$8.20 \times 10.30 \times 0.20$ = 16.892

§ 3 form area

palapet

① $\frac{1}{2} \times (1.82 + 1.835) \times 0.60$ = 1.097

1.605×8.90 = 14.285

1.605×8.70 = 13.964

$-0.60 \times 8.70 + 0.30 \times 0.605 \times 2$ = − 5.583

$\frac{1}{2} \times (1.835 + 1.85) \times 0.60$ = 1.106

$0.30 \times (1.82 + 1.85)$ = 1.101

$0.23 \times 0.30 \times 2$ = 0.138

② 0.30×8.70 = 2.61

$0.30 \times \sqrt{2} \times 8.70$ = 3.691

wall

③ $\frac{1}{2} \times (0.933 + 0.68) \times 10.10$ = 8.146

$\frac{1}{2} \times (0.906 + 0.703) \times 8.10$ = 6.516

$1.00 \times (0.933 + 0.68)$ = 1.613

④ $0.20 \times \sqrt{2} \times (2.40 + 2.50 + 2.60)$ = 2.121

$0.30 \times \sqrt{2} \times \frac{1}{2} \times (7.50 + 5.70)$ = 2.80

$\frac{1}{2} \times 0.50 \times 0.50 \times 2$ = 0.25

⑤ 9.00×10.10 = 90.90

$8.00 \times (1.80 + 1.90 + 2.00)$ = 45.60

$0.50 \times 9.00 \times 2 = 9.00$

footing

⑥ $\frac{1}{2} \times 2.00 \times 0.50 \times 2 = 1.00$

⑦ $\frac{1}{2} \times 0.50 \times 0.50 \times 2 = 0.25$

⑧ $(8.00 + 10.10) \times 2 \times 1.00 = 36.20$

buttress

⑨ $\frac{1}{2} \times 8.70 \times 4.833 \times 2 \times 2 = 84.094$

$\sqrt{5.00^2 + 9.00^2} \times 0.60 \times 2 = 12.355$

⑩ $\frac{1}{2} \times (9.00 + 8.00) \times 0.50 \times 2 \times 2 = 17.00$

wing (left)

⑪ $\frac{1}{2} \times (1.00 + 4.026) \times 4.789 \times 2 = 24.07$

$(1.00 + \sqrt{4.789^2 + 3.193^2}) \times 0.60 = 4.054$

⑫ $\frac{1}{2} \times (11.795 + 11.763) \times 0.911 \times 2 = 21.461$

$-0.30 \times (3.138 + 0.911) = -1.215$

⑬ $\frac{1}{2} \times (9.00 + 8.00) \times 0.50 = 4.25$

$\frac{1}{2} \times (9.00 + 8.60) \times 0.20 = 1.76$

⑭ $\frac{1}{2} \times 7.769 \times 4.089 = 15.884$

$\frac{1}{2} \times 7.469 \times 3.931 = 14.68$

$\sqrt{4.089^2 + 7.769^2} \times 0.60 = 5.268$

wing (right)

⑮ $(8.00 \times 2 + 0.60) \times 0.63 = 10.458$

⑯ $\frac{1}{2} \times (0.77 + 2.266) \times 3.00 \times 2 = 9.108$

$(0.37 + \sqrt{3.00^2 + 2.00^2}) \times 0.80 = 3.18$

⑰ $\frac{1}{2} \times (10.084 + 10.911) \times 5.00 \times 2 = 109.975$

$-0.30 \times (5.00 + 1.885) = -2.066$

$0.80 \times 8.818 = 7.054$

⑱ $\frac{1}{2} \times (9.00 + 8.60) \times 0.20 = 1.76$

$\frac{1}{2} \times (9.00 + 8.00) \times 0.50 = 4.25$

haunch

(19)	$0.30 \times \sqrt{2} \times 1.538$	=	0.653
(20)	$0.30 \times \sqrt{2} \times 1.285$	=	0.545
(21)	$0.30 \times \sqrt{2} \times 8.30 \times 6$	=	21.128
(22)	$0.30 \times \sqrt{2} \times 5.30 \times 6$	=	13.492
	$\frac{1}{2} \times 0.30 \times 0.30 \times 2$	=	0.09
	$\frac{1}{2} \times 0.30 \times 0.343 \times 4$	=	0.206
	ΣA	=	620.299

blinding concrete form area

$(8.20 + 10.30) \times 2 \times 0.20 = 7.40 \ m^2$

grand total

type - A (plane formworks)

$A = 582.849 \ m^2$

type - E (rough finish formworks)

$A = 44.85 \ m^2$

§ 4 EARTH WORKS

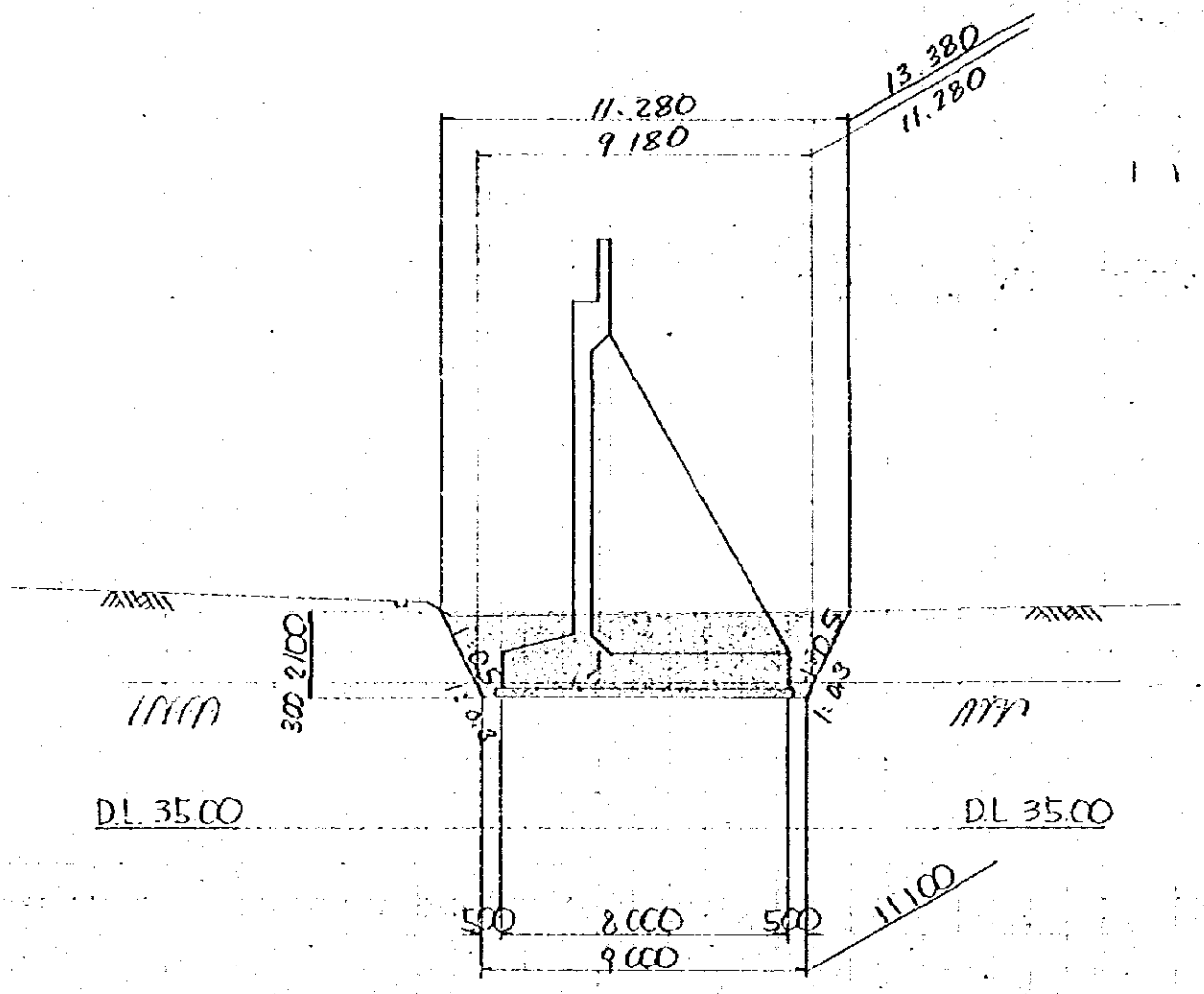

(1) EXCAVATION

common

$\frac{1}{6} \times 2.10 \times [11.28 \times 13.38 + (11.28 + 9.18)(13.38 + 11.28) + 9.18 \times 11.28] = 265.66 \ m^3$

ROCK $\frac{1}{6} \times 0.30 \times [9.18 \times 11.28 + (9.18 + 9.00)(11.28 + 11.10) + 9.00 \times 11.10] = 30.52 \ m^3$

wall

$0.50 \times 1.20 \times 10.10 = 6.06$

buttress

$\frac{1}{2} \times (4.835 + 5.50) \times 1.20 \times 0.60 \times 3 = 11.16$

$5.50 \times 1.20 \times 0.80 = 5.28$

$-\frac{1}{2} \times 0.50 \times 0.50 \times (0.60 \times 3 + 0.80) = -0.325$

haunch

$\frac{1}{2} \times 0.30 \times 0.30 \times 1.00 \times 6 = 0.27$

footing $= 1.431$

$= 87.113$

blinding concrete

$= 16.892$

$\Sigma V = 127.881 \ m^3$

(2) BACK FILL

$296.18 - 127.881 = 168.30 \ m^3$