APPENDIX 5 GEOELECTLIC RESISTIVITY SURVEY DATA

Table A-5-1 DATA SHEET OF GEOELECTRIC RESISTIVITY SURVEY

SURVEY NO. 1 DATE: 29 / 1 / 1983 TIME: AM.10.30

PLACE: Mwachinga POINT: No.1

WEATHER: Fine TEMP.:

REMARKS: Wenner's Method

NO.	a (m)	2 π a (m)	R (Ω)	ρ = 2 π a R (Ω - m)	D_p = G — P_1 /P_2 (a/2)	D_c = G — C_1 /C_2 (3a/2)
1	1	6.28	15.8	99.2	0.5	1.5
2	2	12.6	5.0	63.2	1.0	3.0
3	3	18.8	2.0	39.1	1.5	4.5
4	4	25.1	1.1	27.5	2.0	6.0
5	5	31.4	0.65	20.3	2.5	7.5
6	6	37.7	0.5	18.9	3.0	9.0
7	8	50.2	0.38	19.0	4.0	12.0
8	10	62.8	0.3	18.9	5.0	15.0
9	12	75.4	0.25	18.8	6.0	18.0
10	14	87.9	0.34	30.3	7.0	21.0
11	16	100	0.24	24.0	8.0	24.0
12	20	126	0.16	21.0	10.0	30.0
13	25	157	0.17	28.1	12.5	37.5
14	30	188	0.21	39.5	15.0	45.0
15	35	220			17.5	52.5
16	40	251			20.0	60.0
17	50	314			25.0	75.0
18	60	377			30.0	90.0
19	70	440			35.0	105
20	80	502			40.0	120
21	100	628			50.0	150

Table A – 5-2 DATA SHEET OF GEOELECTRIC RESISTIVITY SURVEY

SURVEY NO. 2

DATE: 29/ 1 /1983 TIME: AM. 11.00

PLACE: Mwachinga POINT: No.2

WEATHER: Fine TEMP.:

REMARKS: Wenner's Method

NO.	a (m)	2 π a (m)	R (Ω)	ρ = 2 π a R (Ω - m)	D_p = G – P_1 /P_2 (a/2)	D_c = G – C_1 /C_2 (3a/2)
1	1	6.28	64	401.9	0.5	1.5
2	2	12.6	7.0	88.2	1.0	3.0
3	3	18.8	2.2	41.3	1.5	4.5
4	4	25.1	1.6	40.1	2.0	6.0
5	5	31.4	0.45	14.1	2.5	7.5
6	6	37.7	0.35	13.2	3.0	9.0
7	8	50.2	0.18	9.0	4.0	12.0
8	10	62.8	0.17	10.6	5.0	15.0
9	12	75.4	0.11	8.3	6.0	18.0
10	14	87.9	0.1	8.8	7.0	21.0
11	16	100	0.075	7.5	8.0	24.0
12	20	126			10.0	30.0
13	25	157			12.5	37.5
14	30	188			15.0	45.0
15	35	220			17.5	52.5
16	40	251			20.0	60.0
17	50	314			25.0	75.0
18	60	377			30.0	90.0
19	70	440			35.0	105
20	80	502			40.0	120
21	100	628			50.0	150

Table A- 5-3 DATA SHEET OF GEOELECTRIC RESISTIVITY SURVEY

SURVEY NO. 3

DATE: 31 / 1 / 1983 TIME: 10.30

PLACE: Kanana POINT: No.1 near to well

WEATHER: TEMP.:

REMARKS: Wenner's Method

NO.	a (m)	2 π a (m)	R (Ω)	ρ = 2 π a R (Ω - m)	D_p = G − P_1 /P_2 (a/2)	D_c = G − C_1 /C_2 (3a/2)
1	1	6.28	29.2	183.3	0.5	1.5
2	2	12.6	11.2	141.1	1.0	3.0
3	3	18.8	6.6	124.1	1.5	4.5
4	4	25.1	4.6	115.5	2.0	6.0
5	5	31.4	5.2	163.3	2.5	7.5
6	6	37.7	2.5	94.2	3.0	9.0
7	8	50.2	-	-	4.0	12.0
8	10	62.8	2.0	125.6	5.0	15.0
9	12	75.4	1.9	143.3	6.0	18.0
10	14	87.9	1.2	105.5	7.0	21.0
11	16	100	4.1	401.0	8.0	24.0
12	20	126	0.64	80.6	10.0	30.0
13	25	157			12.5	37.5
14	30	188			15.0	45.0
15	35	220			17.5	52.5
16	40	251			20.0	60.0
17	50	314			25.0	75.0
18	60	377			30.0	90.0
19	70	440			35.0	105
20	80	502			40.0	120
21	100	628			50.0	150

Table A-5-4 DATA SHEET OF GEOELECTRIC RESISTIVITY SURVEY

SURVEY NO. 4 DATE: 31 / 1 / 1983 TIME: 11.30

PLACE: Kanana POINT: No.2

WEATHER: TEMP.:

REMARKS: Wenner's Method

NO.	a (m)	2 π a (m)	R (Ω)	ρ = 2 π a R (Ω - m)	D_p = G − P_1 /P_2 (a/2)	D_c = G − C_1 /C_2 (3a/2)
1	1	6.28	56	351.7	0.5	1.5
2	2	12.6	17.1	215.4	1.0	3.0
3	3	18.8	7.8	146.6	1.5	4.5
4	4	25.1	4.6	115.4	2.0	6.0
5	5	31.4	3.7	116.8	2.5	7.5
6	6	37.7	2.7	101.8	3.0	9.0
7	8	50.2	1.7	85.3	4.0	12.0
8	10	62.8	1.4	87.9	5.0	15.0
9	12	75.4	0.76	57.3	6.0	18.0
10	14	87.9	0.32	28.1	7.0	21.0
11	16	100	0.25	25.0	8.0	24.0
12	20	126	0.24	30.2	10.0	30.0
13	25	157	0.10	15.7	12.5	37.5
14	30	188			15.0	45.0
15	35	220			17.5	52.5
16	40	251			20.0	60.0
17	50	314			25.0	75.0
18	60	377			30.0	90.0
19	70	440			35.0	105
20	80	502			40.0	120
21	100	628			50.0	150

Table A-5-5 DATA SHEET OF GEOELECTRIC RESISTIVITY SURVEY

SURVEY NO. 5 DATE: 31 / 1 / 1983 TIME:

PLACE: Kanana POINT: No.3 near to stream

WEATHER: TEMP.:

REMARKS: Wenner's Method

NO.	a (m)	2 π a (m)	R (Ω)	ρ= 2 π a R (Ω - m)	D_p = G − P_1 /P_2 (a/2)	D_c = G − C_1 /C_2 (3a/2)
1	1	6.28	155	973.4	0.5	1.5
2	2	12.6	68	856.8	1.0	3.0
3	3	18.8	35	658.0	1.5	4.5
4	4	25.1	20	502.0	2.0	6.0
5	5	31.4	9.5	298.0	2.5	7.5
6	6	37.7	4.9	170.0	3.0	9.0
7	8	50.2	1.4	70.2	4.0	12.0
8	10	62.8	0.25	15.7	5.0	15.0
9	12	75.4	-	-	6.0	18.0
10	14	87.9			7.0	21.0
11	16	100			8.0	24.0
12	20	126			10.0	30.0
13	25	157			12.5	37.5
14	30	188			15.0	45.0
15	35	220			17.5	52.5
16	40	251			20.0	60.0
17	50	314			25.0	75.0
18	60	377			30.0	90.0
19	70	440			35.0	105
20	80	502			40.0	120
21	100	628			50.0	150

Table A- 5-6 DATA SHEET OF GEOELECTRIC RESISTIVITY SURVEY

SURVEY NO. 6 DATE: 31 / 1 / 1983 TIME:

PLACE: Kidimu POINT: No.1

WEATHER: TEMP.:

REMARKS: Wenner's Method

NO.	a (m)	2 π a (m)	R (Ω)	ρ = 2 π a R (Ω - m)	D_p = G — P_1 /P_2 (a/2)	D_c = G — C_1 /C_2 (3a/2)
1	1	6.28	29	182.1	0.5	1.5
2	2	12.6	16.5	207.9	1.0	3.0
3	3	18.8	9.5	178.6	1.5	4.5
4	4	25.1	7.0	175.7	2.0	6.0
5	5	31.4	5.7	179.0	2.5	7.5
6	6	37.7	5.0	188.5	3.0	9.0
7	8	50.2	3.0	150.6	4.0	12.0
8	10	62.8	1.9	119.3	5.0	15.0
9	12	75.4	1.3	98.0	6.0	18.0
10	14	87.9	0.67	58.9	7.0	21.0
11	16	100	0.59	59.0	8.0	24.0
12	20	126	0.48	60.5	10.0	30.0
13	25	157	0.35	54.9	12.5	37.5
14	30	188	0.31	58.3	15.0	45.0
15	35	220	0.1	22.0	17.5	52.5
16	40	251			20.0	60.0
17	50	314			25.0	75.0
18	60	377			30.0	90.0
19	70	440			35.0	105
20	80	502			40.0	120
21	100	628			50.0	150

Table A-5-7 DATA SHEET OF GEOELECTRIC RESISTIVITY SURVEY

SURVEY NO. 7

DATE: 31 / 1 / 1983 TIME: 15.30

PLACE: Kidimu POINT: No.2

WEATHER: TEMP.:

REMARKS: Wenner's Method

NO.	a (m)	2 π a (m)	R (Ω)	ρ = 2 π a R (Ω - m)	D_p = G — P_1 /P_2 (a/2)	D_c = G — C_1 /C_2 (3a/2)
1	1	6.28	-		0.5	1.5
2	2	12.6	205	2583	1.0	3.0
3	3	18.8	115	2162	1.5	4.5
4	4	25.1	59	1480.9	2.0	6.0
5	5	31.4	38	1193	2.5	7.5
6	6	37.7	19.5	735	3.0	9.0
7	8	50.2	7.2	361.4	4.0	12.0
8	10	62.8	3.2	201.0	5.0	15.0
9	12	75.4	-		6.0	18.0
10	14	87.9	1.9	167	7.0	21.0
11	16	100	5.3	503	8.0	24.0
12	20	126	17.7	2230	10.0	30.0
13	25	157	3.9	612	12.5	37.5
14	30	188	13.3	2500	15.0	45.0
15	35	220			17.5	52.5
16	40	251			20.0	60.0
17	50	314			25.0	75.0
18	60	377			30.0	90.0
19	70	440			35.0	105
20	80	502			40.0	120
21	100	628			50.0	150

Table A-5-8 DATA SHEET OF GEOELECTRIC RESISTIVITY SURVEY

SURVEY NO. 8 DATE: / / TIME: 16.10

PLACE: Kidimu POINT: No.3 near to well

WEATHER: TEMP.:

REMARKS: Wenner's Method

NO.	a (m)	2 π a (m)	R (Ω)	ρ = 2 π a R (Ω - m)	D_p = G − P_1 /P_2 (a/2)	D_c = G − C_1 /C_2 (3a/2)
1	1	6.28	-		0.5	1.5
2	2	12.6	65	819	1.0	3.0
3	3	18.8	19	357.2	1.5	4.5
4	4	25.1	11.2	281.2	2.0	6.0
5	5	31.4	8.1	254.3	2.5	7.5
6	6	37.7	4.0	150.8	3.0	9.0
7	8	50.2	1.4	70.3	4.0	12.0
8	10	62.8	0.4	25.1	5.0	15.0
9	12	75.4	0.3	22.6	6.0	18.0
10	14	87.9	0.27	23.5	7.0	21.0
11	16	100			8.0	24.0
12	20	126			10.0	30.0
13	25	157			12.5	37.5
14	30	188			15.0	45.0
15	35	220			17.5	52.5
16	40	251			20.0	60.0
17	50	314			25.0	75.0
18	60	377			30.0	90.0
19	70	440			35.0	105
20	80	502			40.0	120
21	100	628			50.0	150

Table A-5-9 DATA SHEET OF GEOELECTRIC RESISTIVITY SURVEY

SURVEY NO. 9 DATE: 1 / 2 / 1983 TIME:

PLACE: Fahamuni POINT: No.1 near to well

WEATHER: TEMP.:

REMARKS: Wenner's Method

NO.	a (m)	2 π a (m)	R (Ω)	ρ = 2 π a R (Ω - m)	D_p = G − P_1 /P_2 (a/2)	D_c = G − C_1 /C_2 (3a/2)
1	1	6.28	10.3	64.7	0.5	1.5
2	2	12.6	3.5	44.1	1.0	3.0
3	3	18.8	1.7	32.0	1.5	4.5
4	4	25.1	1.2	30.1	2.0	6.0
5	5	31.4	0.8	25.1	2.5	7.5
6	6	37.7	0.65	24.5	3.0	9.0
7	8	50.2	0.45	22.6	4.0	12.0
8	10	62.8	0.36	22.6	5.0	15.0
9	12	75.4	0.3	22.6	6.0	18.0
10	14	87.9	0.25	21.8	7.0	21.0
11	16	100	0.22	22.0	8.0	24.0
12	20	126	0.15	19.0	10.0	30.0
13	25	157	0.12	18.8	12.5	37.5
14	30	188	-	-	15.0	45.0
15	35	220			17.5	52.5
16	40	251			20.0	60.0
17	50	314			25.0	75.0
18	60	377			30.0	90.0
19	70	440			35.0	105
20	80	502			40.0	120
21	100	628			50.0	150

Table A-5-10 DATA SHEET OF GEOELECTRIC RESISTIVITY SURVEY

SURVEY NO. 10

DATE: 1 / 2 / 1983 TIME: 10.30

PLACE: Fahamuni POINT: No.2

WEATHER: TEMP.:

REMARKS: Wenner's Method

NO.	a (m)	2 π a (m)	R (Ω)	ρ = 2 π a R (Ω - m)	D_p = G — P_1 /P_2 (a/2)	D_c = G — C_1 /C_2 (3a/2)
1	1	6.28	4.4	27.6	0.5	1.5
2	2	12.6	1.7	21.4	1.0	3.0
3	3	18.8	1.1	20.7	1.5	4.5
4	4	25.1	0.84	21.0	2.0	6.0
5	5	31.4	0.73	22.9	2.5	7.5
6	6	37.7	0.60	22.6	3.0	9.0
7	8	50.2	0.50	25.0	4.0	12.0
8	10	62.8	0.36	22.6	5.0	15.0
9	12	75.4	0.34	25.5	6.0	18.0
10	14	87.9	0.30	26.4	7.0	21.0
11	16	100	0.25	25.0	8.0	24.0
12	20	126	0.18	22.7	10.0	30.0
13	25	157	0.15	23.5	12.5	37.5
14	30	188	0.11	20.7	15.0	45.0
15	35	220	0.11	24.2	17.5	52.5
16	40	251	0.09	22.6	20.0	60.0
17	50	314			25.0	75.0
18	60	377			30.0	90.0
19	70	440			35.0	105
20	80	502			40.0	120
21	100	628			50.0	150

Table A-5-11 DATA SHEET OF GEOELECTRIC RESISTIVITY SURVEY

SURVEY NO. 11

DATE: 1 / 2 / 1983 TIME:

PLACE: Eabamuni POINT: No.3

WEATHER: TEMP.: 33°

REMARKS: Wenner's Method

NO.	a (m)	2 π a (m)	R (Ω)	ρ = 2 π a R (Ω - m)	D_p = G — P_1 /P_2 (a/2)	D_c = G — C_1 /C_2 (3a/2)
1	1	6.28	11.5	72.2	0.5	1.5
2	2	12.6	3.9	49.1	1.0	3.0
3	3	18.8	2.1	39.5	1.5	4.5
4	4	25.1	1.7	42.7	2.0	6.0
5	5	31.4	0.85	26.7	2.5	7.5
6	6	37.7	0.77	29.0	3.0	9.0
7	8	50.2	0.52	26.1	4.0	12.0
8	10	62.8	0.49	30.7	5.0	15.0
9	12	75.4	0.5	37.7	6.0	18.0
10	14	87.9	0.37	32.5	7.0	21.0
11	16	100	0.32	32.0	8.0	24.0
12	20	126	0.15	18.9	10.0	30.0
13	25	157	0.12	18.8	12.5	37.5
14	30	188	0.11	20.7	15.0	45.0
15	35	220	-	-	17.5	52.5
16	40	251			20.0	60.0
17	50	314			25.0	75.0
18	60	377			30.0	90.0
19	70	440			35.0	105
20	80	502			40.0	120
21	100	628			50.0	150

Table A-5-12 DATA SHEET OF GEOELECTRIC RESISTIVITY SURVEY

SURVEY NO. 12 DATE: 1 / 2 / 1983 TIME:

PLACE: Buibui POINT: No.1 near to spring

WEATHER: TEMP.:

REMARKS: Wenner's Method

NO.	a (m)	2 π a (m)	R (Ω)	ρ = 2 π a R (Ω - m)	D_p = G -- P_1 /P_2 (a/2)	D_c = G -- C_1 /C_2 (3a/2)
1	1	6.28	35	219.8	0.5	1.5
2	2	12.6	28	353	1.0	3.0
3	3	18.8	22	413	1.5	4.5
4	4	25.1	15	376	2.0	6.0
5	5	31.4	12	377	2.5	7.5
6	6	37.7	7.5	283	3.0	9.0
7	8	50.2	4.6	231	4.0	12.0
8	10	62.8	0.85	53.4	5.0	15.0
9	12	75.4	0.9	68.0	6.0	18.0
10	14	87.9	3.0	263	7.0	21.0
11	16	100	0.16	16	8.0	24.0
12	20	126	-	-	10.0	30.0
13	25	157			12.5	37.5
14	30	188			15.0	45.0
15	35	220			17.5	52.5
16	40	251			20.0	60.0
17	50	314			25.0	75.0
18	60	377			30.0	90.0
19	70	440			35.0	105
20	80	502			40.0	120
21	100	628			50.0	150

Table A-5-13 DATA SHEET OF GEOELECTRIC RESISTIVITY SURVEY

SURVEY NO. 13

DATE: 1 / 2 /1983 TIME: 15.30

PLACE: Buibui POINT: No.2

WEATHER: TEMP.:

REMARKS: Wenner's Method

NO.	a (m)	2 π a (m)	R (Ω)	ρ = 2 π a R (Ω - m)	D_p = G — P_1 /P_2 (a/2)	D_c = G — C_1 /C_2 (3a/2)
1	1	6.28	40	251	0.5	1.5
2	2	12.6	23	290	1.0	3.0
3	3	18.8	13	244	1.5	4.5
4	4	25.1	8.4	211	2.0	6.0
5	5	31.4	6.4	201	2.5	7.5
6	6	37.7	5.0	188.5	3.0	9.0
7	8	50.2	3.2	160.6	4.0	12.0
8	10	62.8	2.5	157	5.0	15.0
9	12	75.4	1.9	143.2	6.0	18.0
10	14	87.9	1.8	158.2	7.0	21.0
11	16	100	0.32	32.0	8.0	24.0
12	20	126	0.57	71.8	10.0	30.0
13	25	157	0.53	83.2	12.5	37.5
14	30	188	0.29	54.5	15.0	45.0
15	35	220	0.22	48.4	17.5	52.5
16	40	251	0.39	97.9	20.0	60.0
17	50	314			25.0	75.0
18	60	377			30.0	90.0
19	70	440			35.0	105
20	80	502			40.0	120
21	100	628			50.0	150

Table A-5-14 DATA SHEET OF GEOELECTRIC RESISTIVITY SURVEY

SURVEY NO. 14

DATE: 1 / 2 /1983 TIME: 16.00

PLACE: Buibui POINT: No.3

WEATHER: TEMP.:

REMARKS: Wenner's Method

NO.	a (m)	2 π a (m)	R (Ω)	ρ = 2 π a R (Ω - m)	D_p = G — P_1 /P_2 (a/2)	D_c = G — C_1 /C_2 (3a/2)
1	1	6.28	50	314	0.5	1.5
2	2	12.6	25	315	1.0	3.0
3	3	18.8	14.8	274	1.5	4.5
4	4	25.1	9.8	246	2.0	6.0
5	5	31.4	6.4	201	2.5	7.5
6	6	37.7	4.6	173	3.0	9.0
7	8	50.2	2.6	130.5	4.0	12.0
8	10	62.8	1.7	106.7	5.0	15.0
9	12	75.4	1.1	82.9	6.0	18.0
10	14	87.9	0.71	62.4	7.0	21.0
11	16	100	0.47	47.0	8.0	24.0
12	20	126	-	-	10.0	30.0
13	25	157	0.07	11.0	12.5	37.5
14	30	188	0.3	56.4	15.0	45.0
15	35	220	0.08	17.6	17.5	52.5
16	40	251			20.0	60.0
17	50	314			25.0	75.0
18	60	377			30.0	90.0
19	70	440			35.0	105
20	80	502			40.0	120
21	100	628			50.0	150

Table A-5-15 DATA SHEET OF GEOELECTRIC RESISTIVITY SURVEY

SURVEY NO. 15 DATE: 2 / 2 / 1983 TIME:

PLACE: UKUNDA POINT: No.1 near to Mr. Iddis house

WEATHER: TEMP.:

REMARKS: Wenner's Method

NO.	a (m)	2 π a (m)	R (Ω)	ρ = 2 π a R (Ω - m)	D_p = G — P_1 /P_2 (a/2)	D_c = G — C_1 /C_2 (3a/2)
1	1	6.28	159	1000	0.5	1.5
2	2	12.6	63	794	1.0	3.0
3	3	18.8	40	752	1.5	4.5
4	4	25.1	26	652	2.0	6.0
5	5	31.4	17.1	537	2.5	7.5
6	6	37.7	14.1	531	3.0	9.0
7	8	50.2	8.0	401	4.0	12.0
8	10	62.8	6.5	408	5.0	15.0
9	12	75.4	4.6	347	6.0	18.0
10	14	87.9	5.2	457	7.0	21.0
11	16	100	3.0	300	8.0	24.0
12	20	126	7.5	945	10.0	30.0
13	25	157	-	-	12.5	37.5
14	30	188	1.2	225	15.0	45.0
15	35	220	2.2	484	17.5	52.5
16	40	251			20.0	60.0
17	50	314			25.0	75.0
18	60	377			30.0	90.0
19	70	440			35.0	105
20	80	502			40.0	120
21	100	628			50.0	150

Fig. A-5-1 Geoelectric Resistivity Survey ρ-a Curve

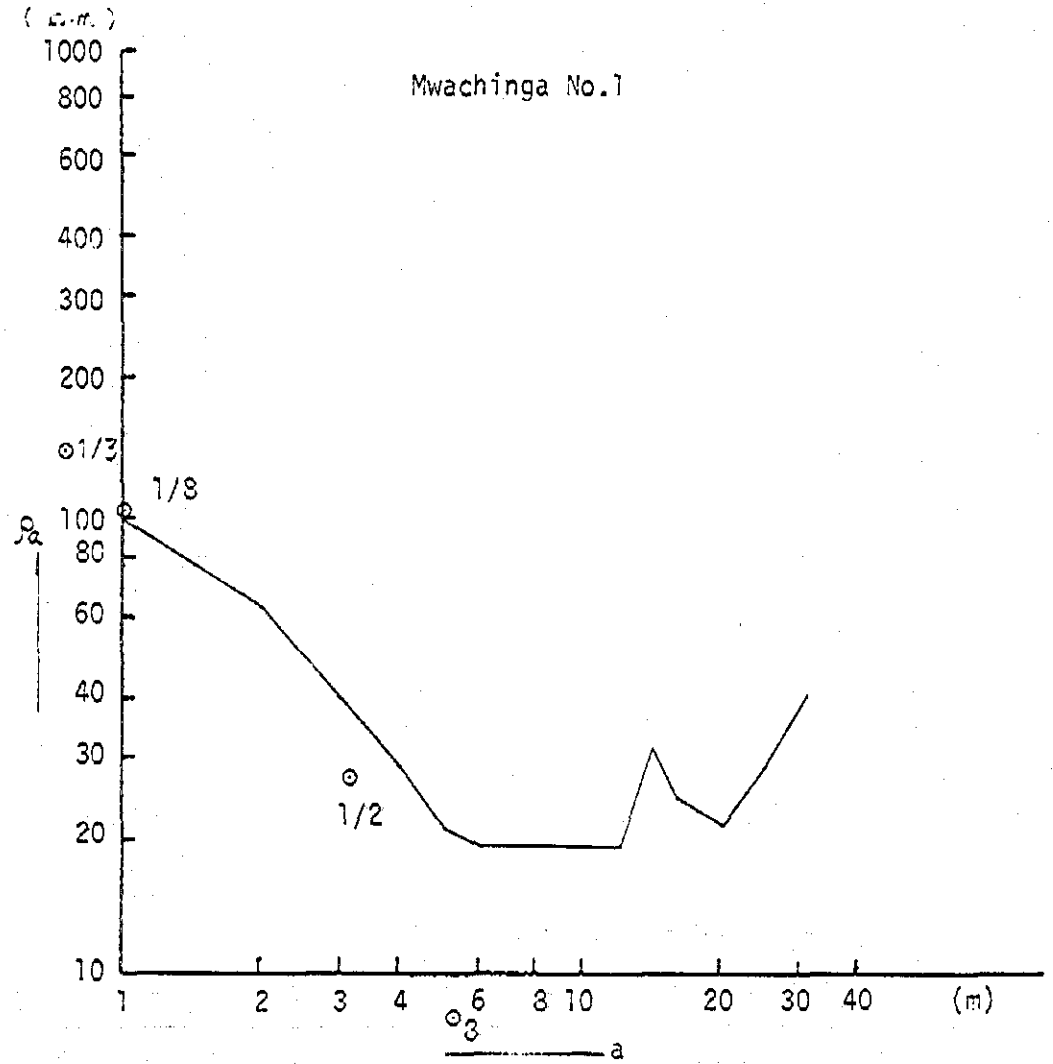

Mwachinga No.1

135	45	13	14	19	64 (Ω·m)

Fig. A-5-2 Geoelectric Resistivity Survey ρ-a Curve

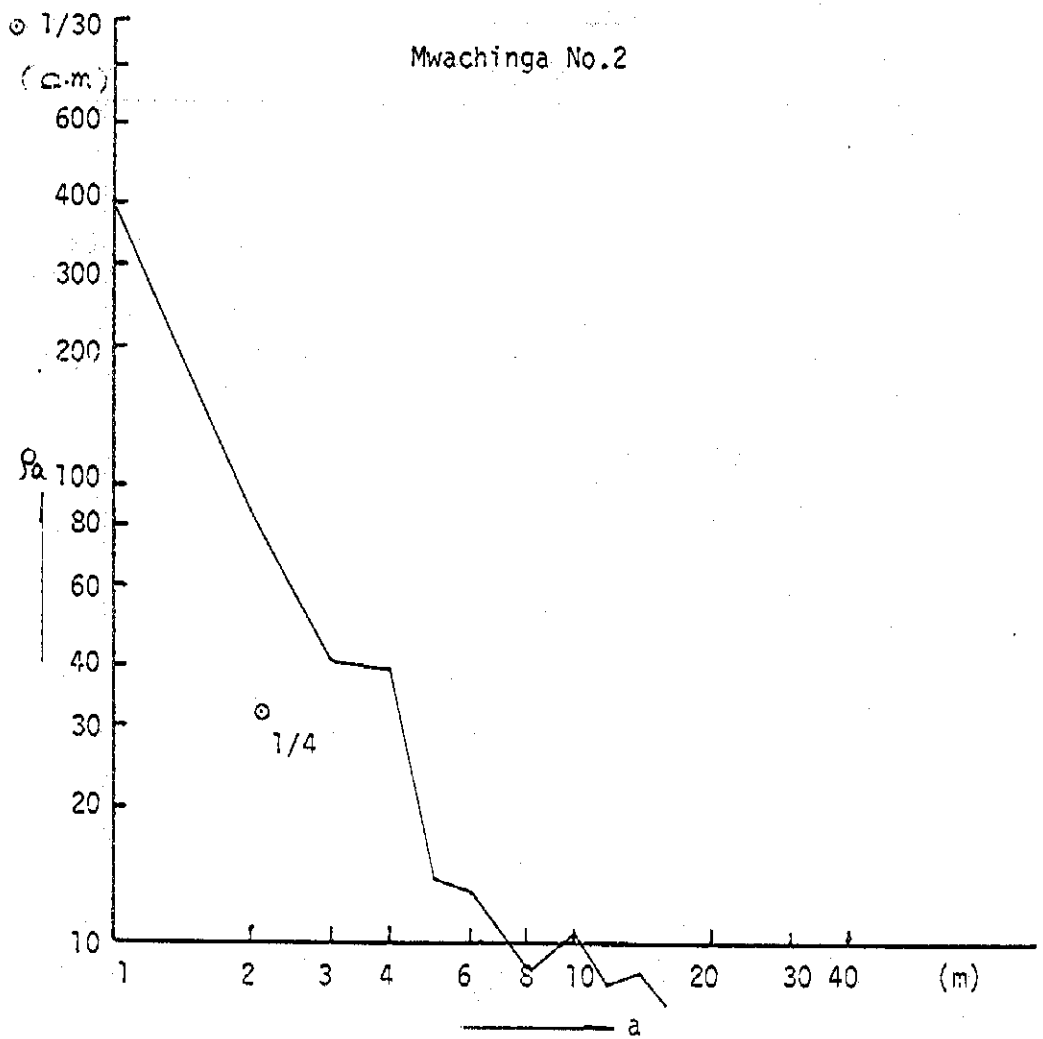

990	33	8	(Ω·m)

Fig. A-5-3 Geoelectric Resistivity Survey ρ-a Curve

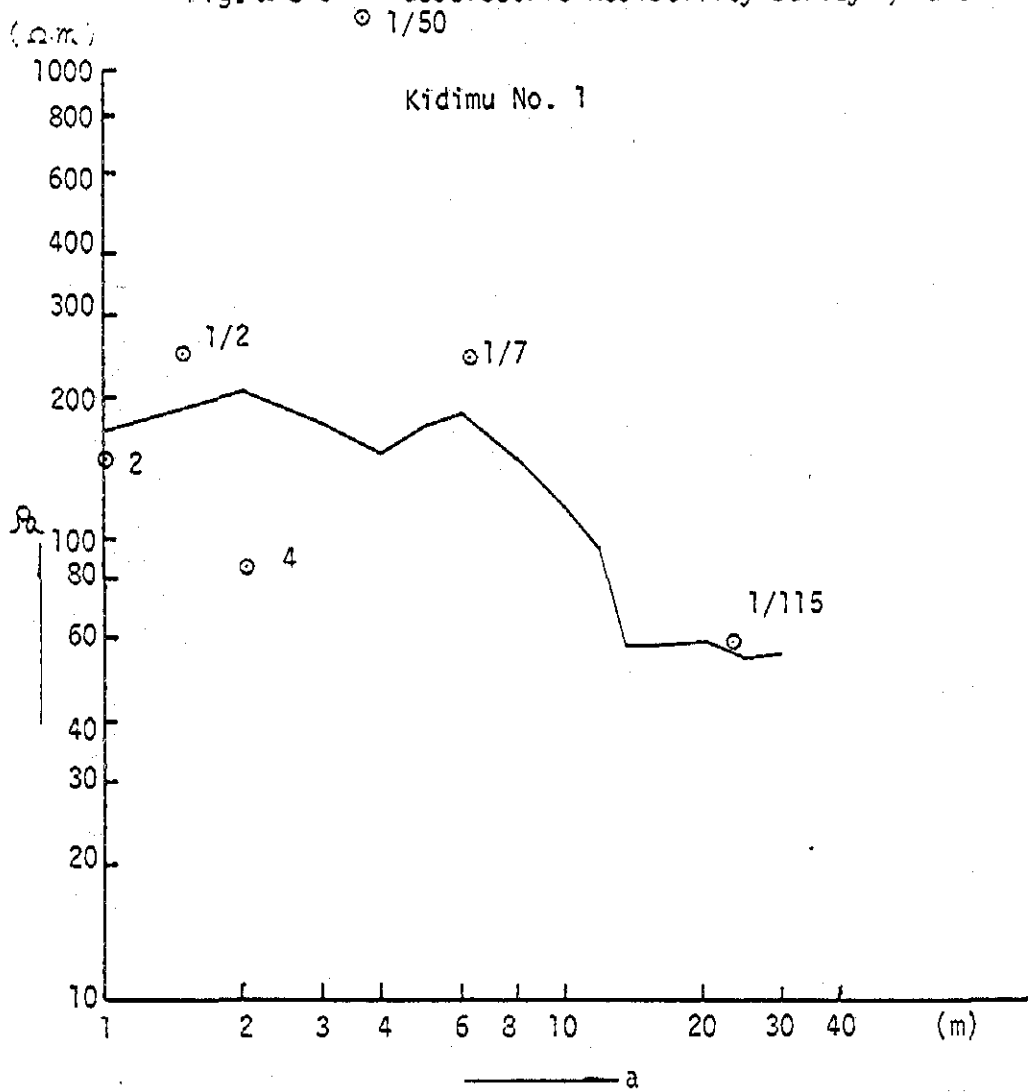

148	296	125	356	36	1	40	(Ω·m)

28

Fig. A-5-4 Geoelectric Resistivity Survey ρ-a Curve

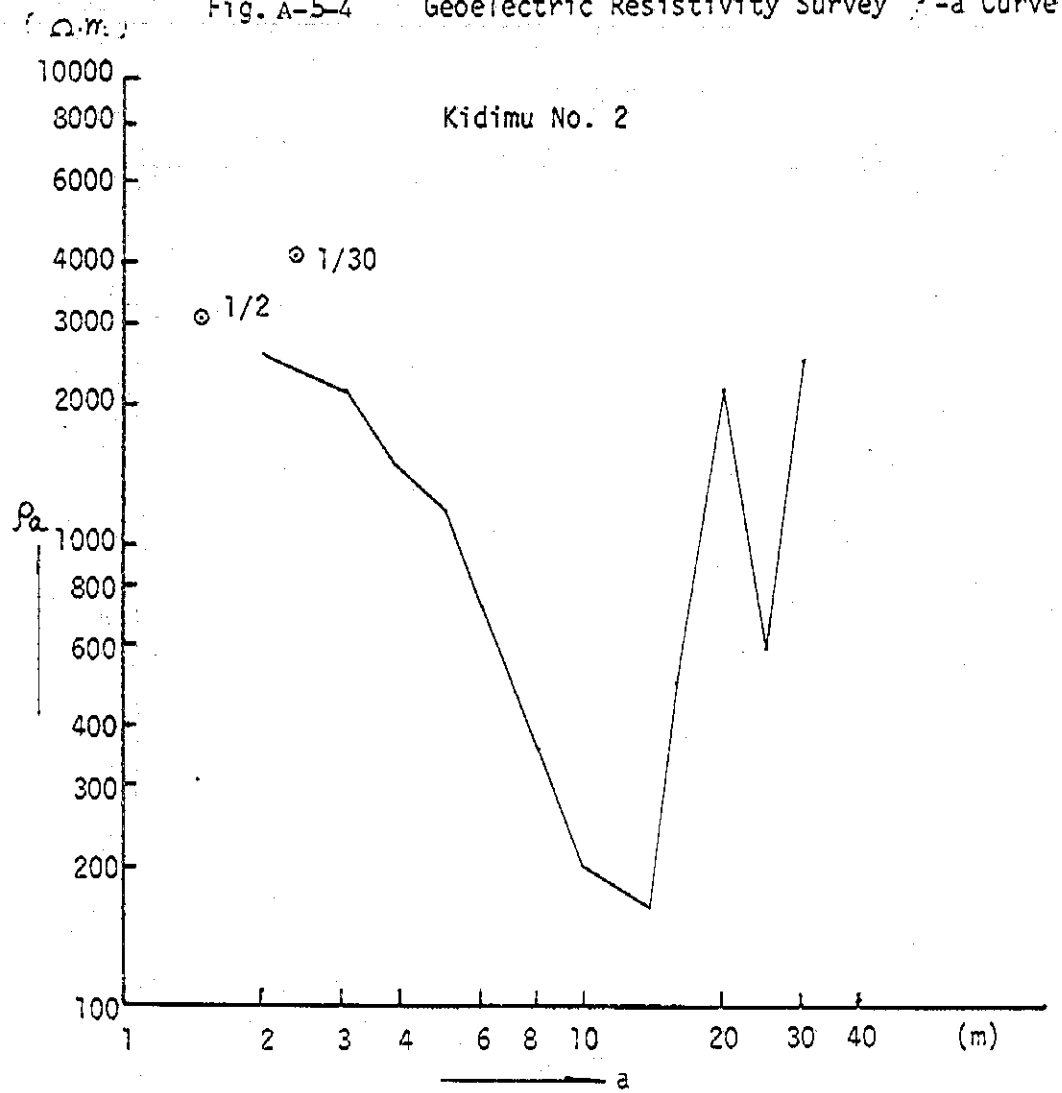

3100	1500	975	142	Unanalysable (Ω·m)

Fig. A-5-5 Geoelectric Resistivity Survey ρ-a Curve

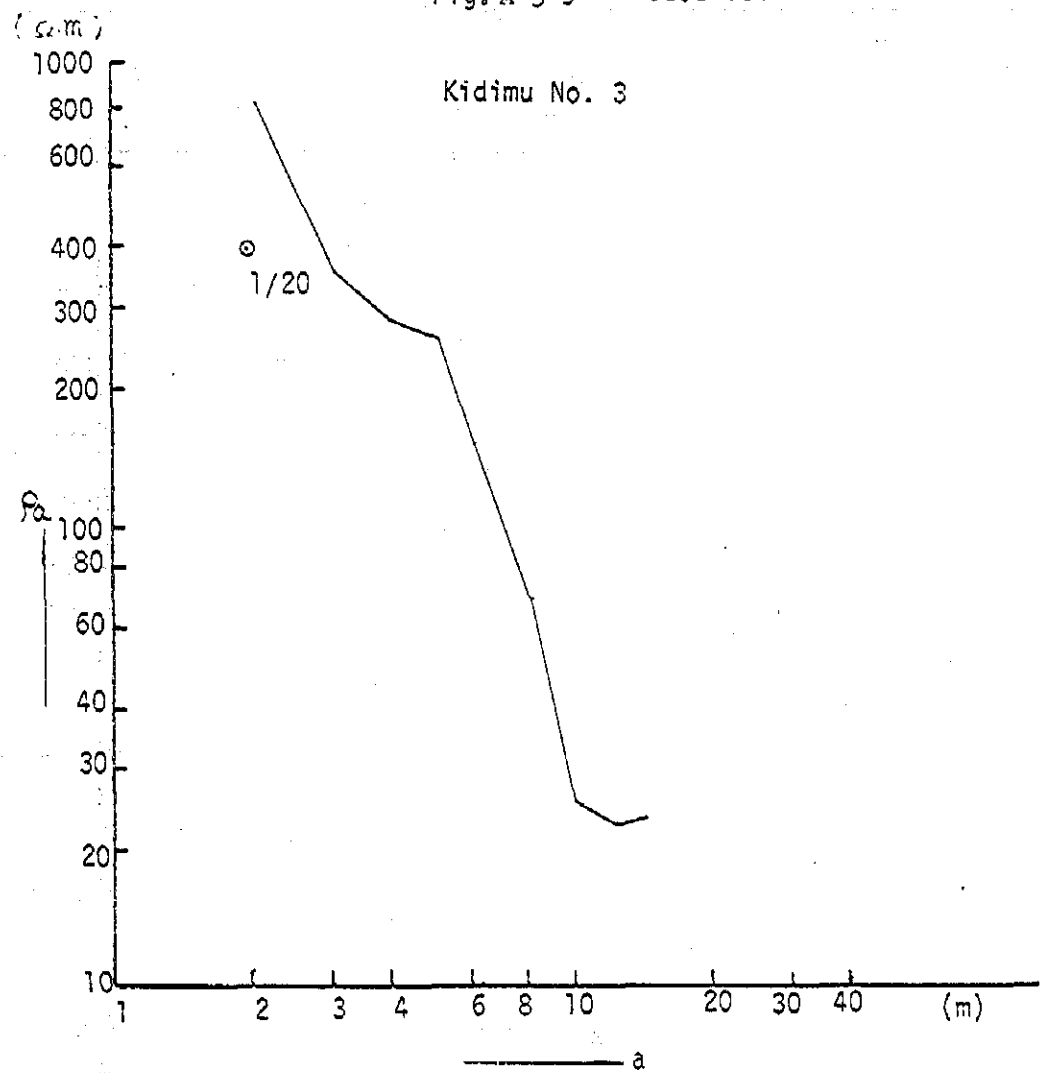

250	50	222	42	20	(Ω.m)

Fig. A-5-6 Geoelectric Resistivity Survey ρ-a Curve

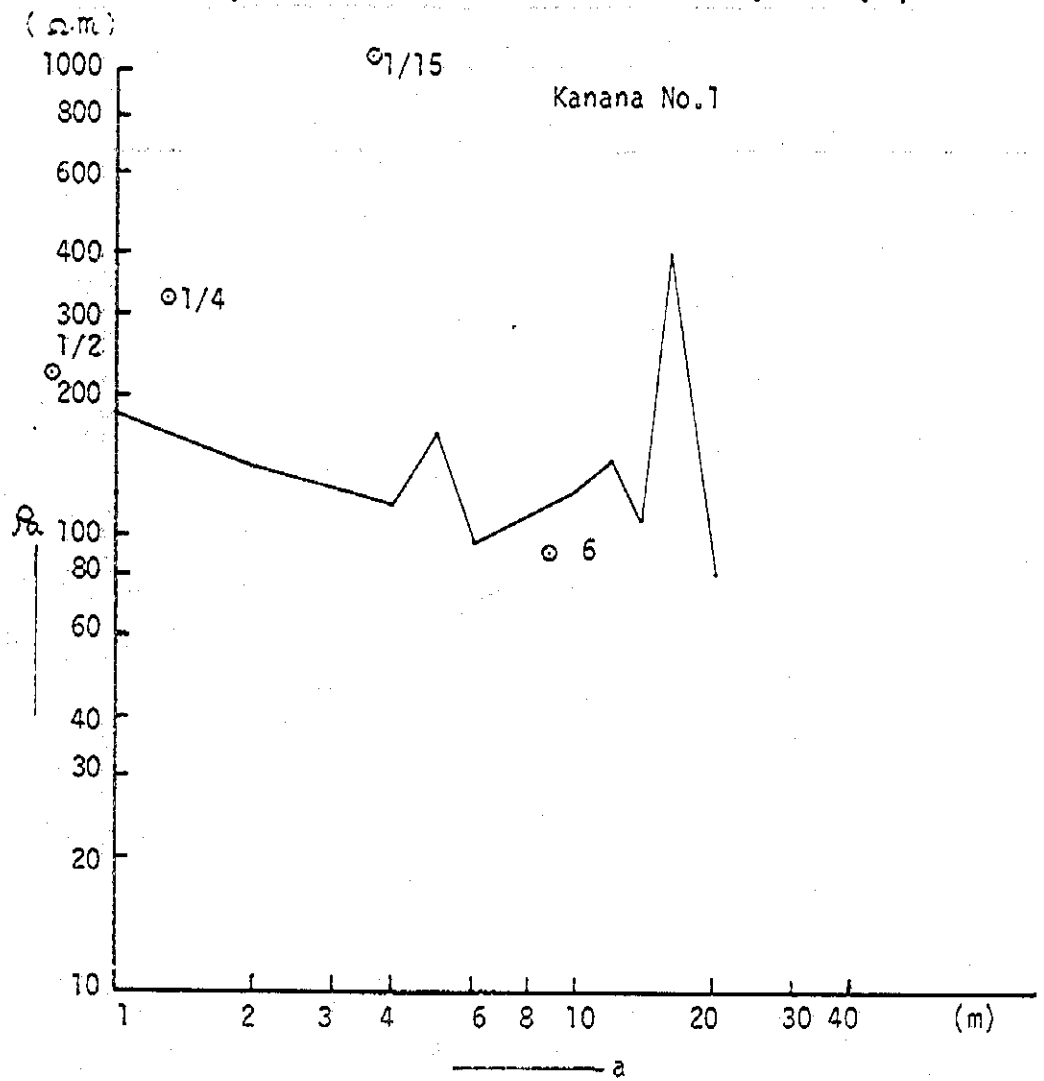

220	110	81	540	73	(Ω·m)

Fig. A-5-7 Geoelectric Resistivity Survey ρ-a Curve

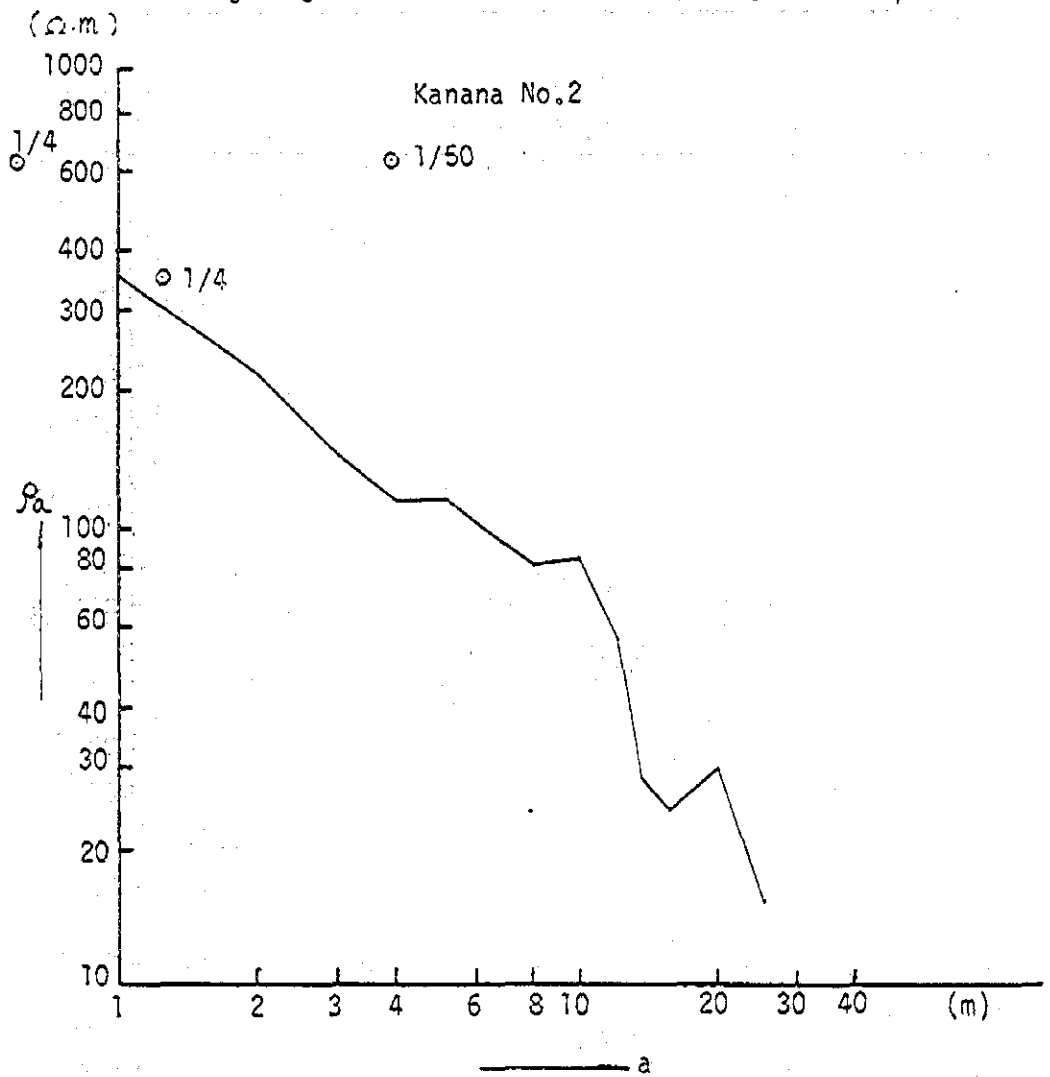

523	131	88	13	(Ω·m)

Fig. A-5-8 Geoelectric Resistivity Survey ρ-a Curve

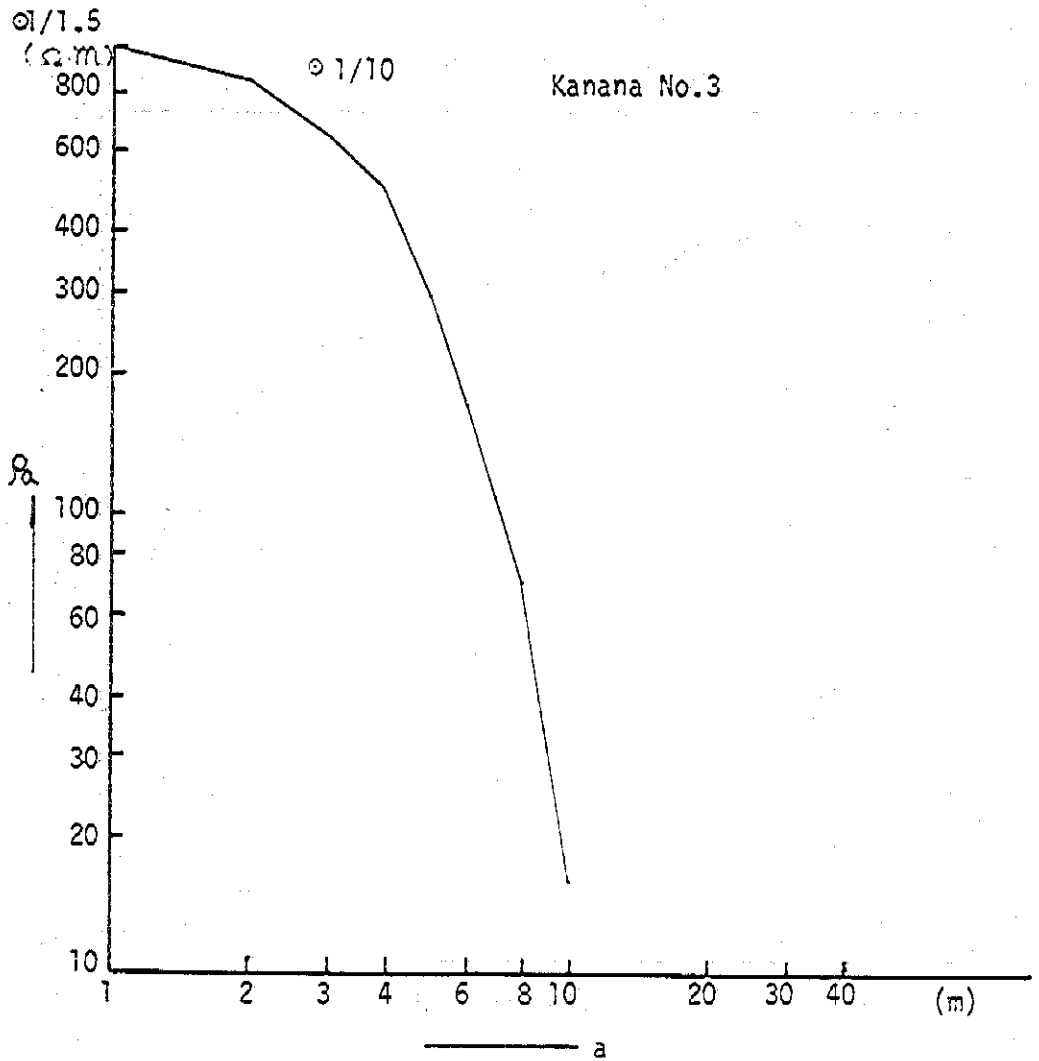

1150	767	91	45	(Ω·m)

Fig. A-5-9 Geoelectric Resistivity Survey ρ-a Curve

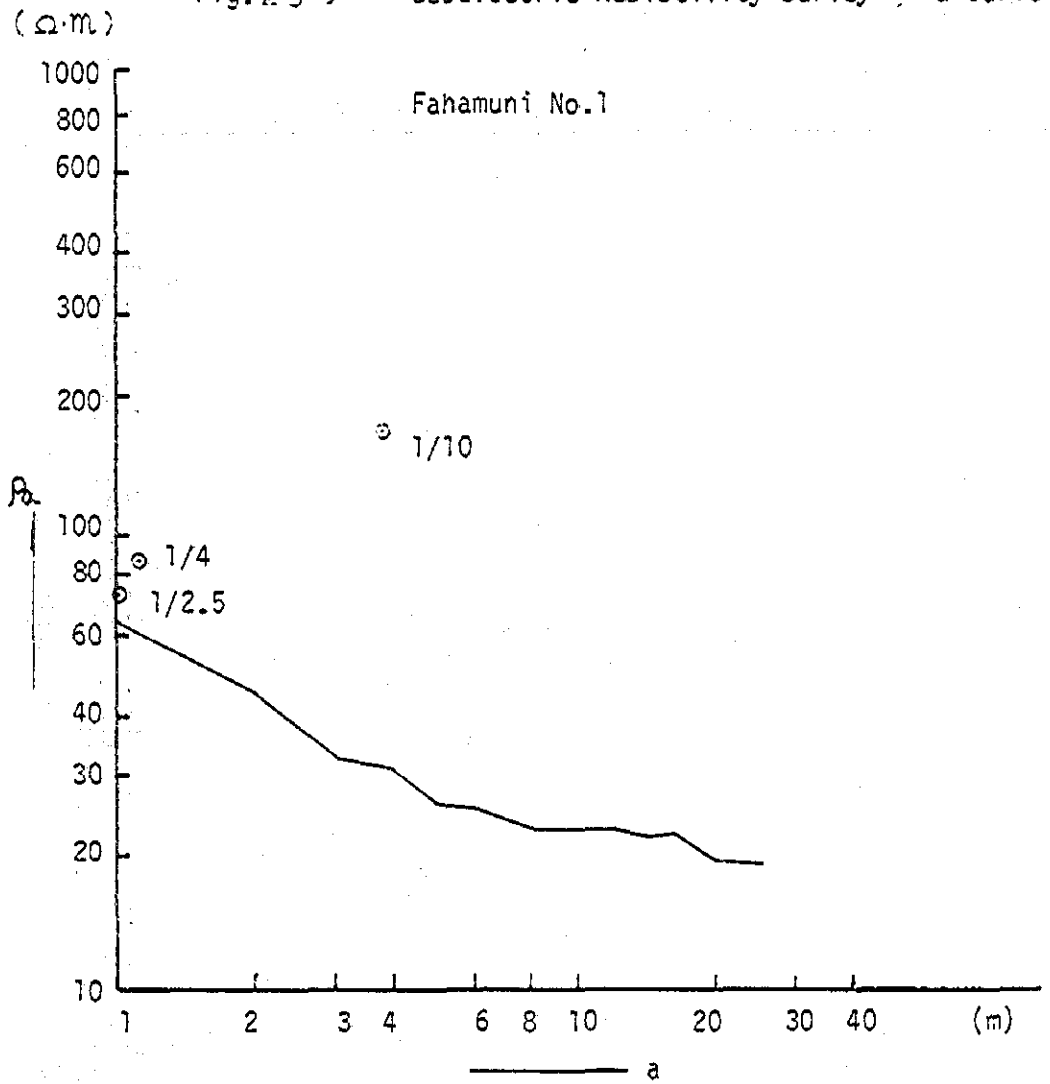

73	29	22	16	(Ω·m)

Fig. A-5-10 Geoelectric Resistivity Survey ρ-a Curve

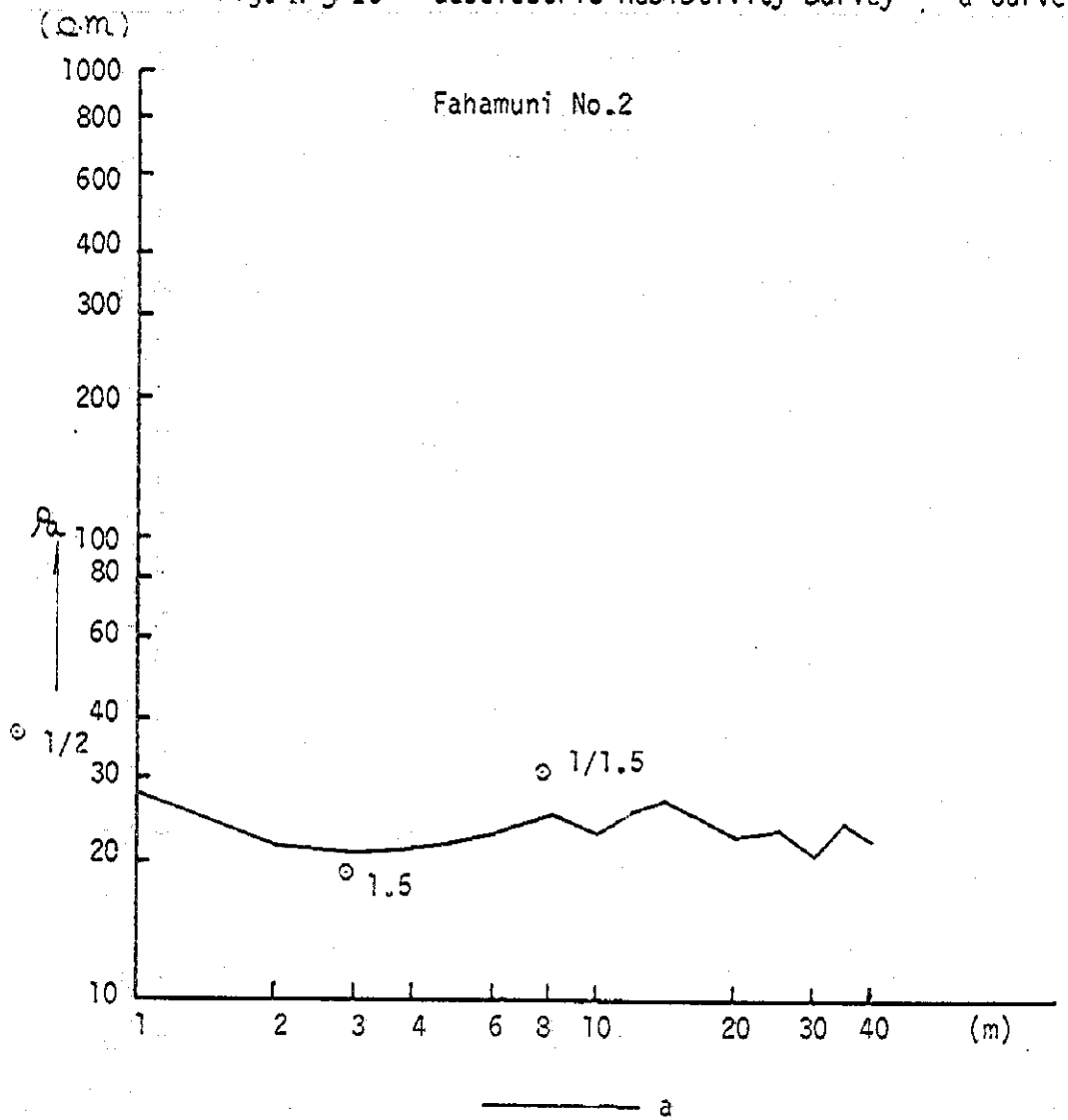

Fahamuni No.2

37	19	28	21 (Ω·m)

Fig. A-5-11 Geoelectric Resistivity Survey ρ-a Curve

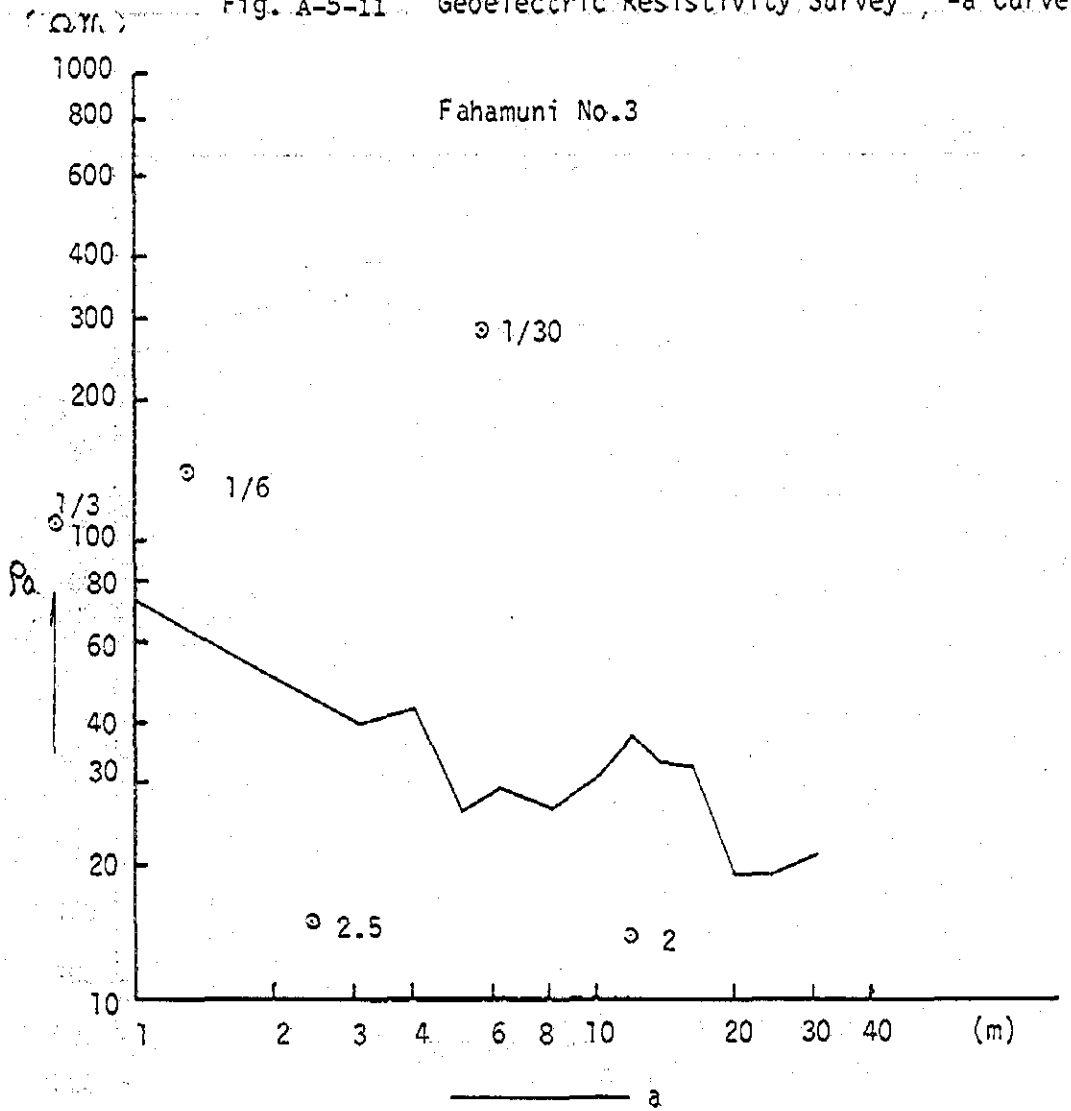

106	35	23	40	9	28	(Ωm)

Fig. A-5-12 Geoelectric Resistivity Survey ρa-a Curve

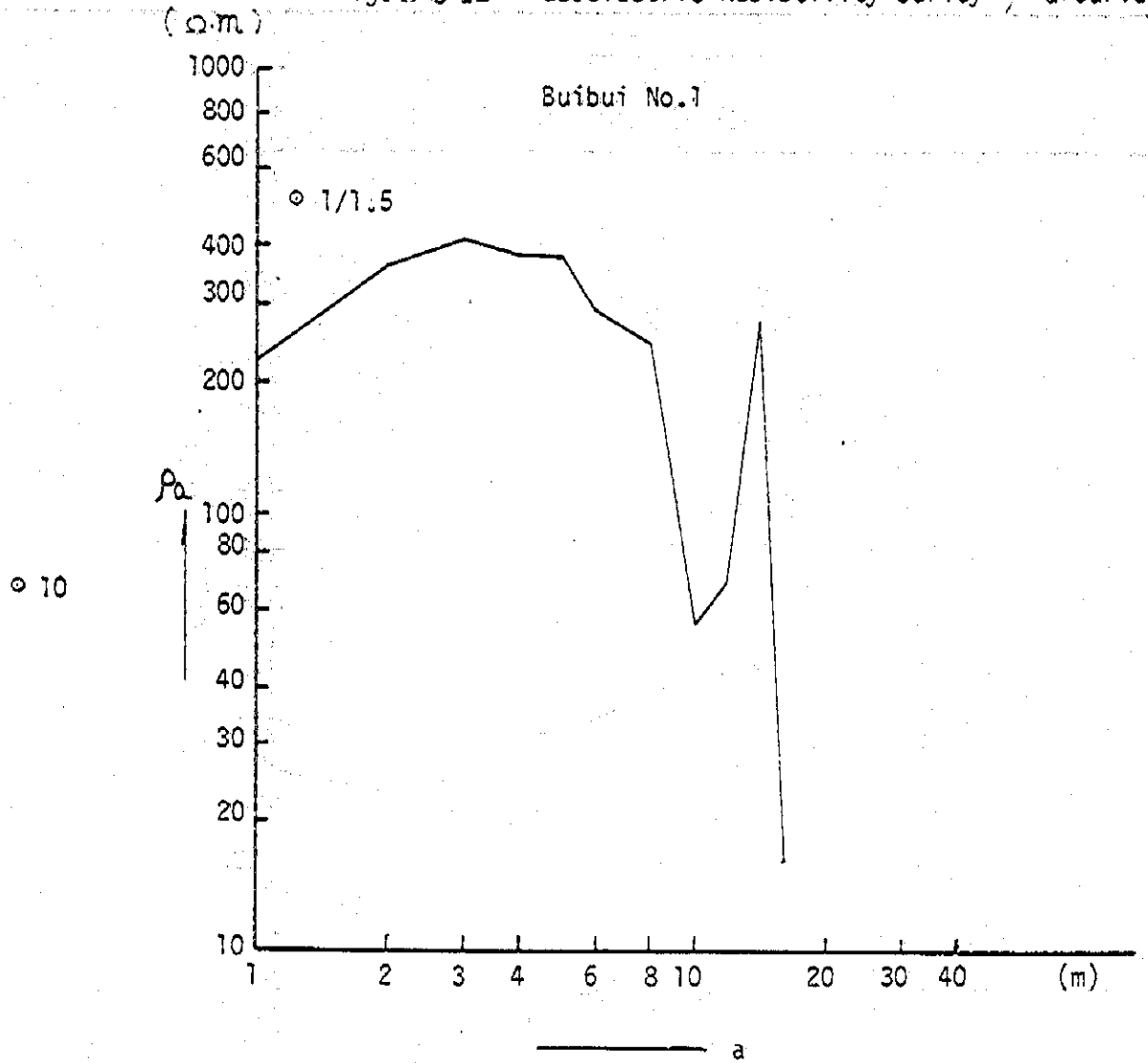

66	660	333	137	42	Unanalysable (Ω m)

Fig. A-5-13 Geoelectric Resistivity Survey ρa-a Curve

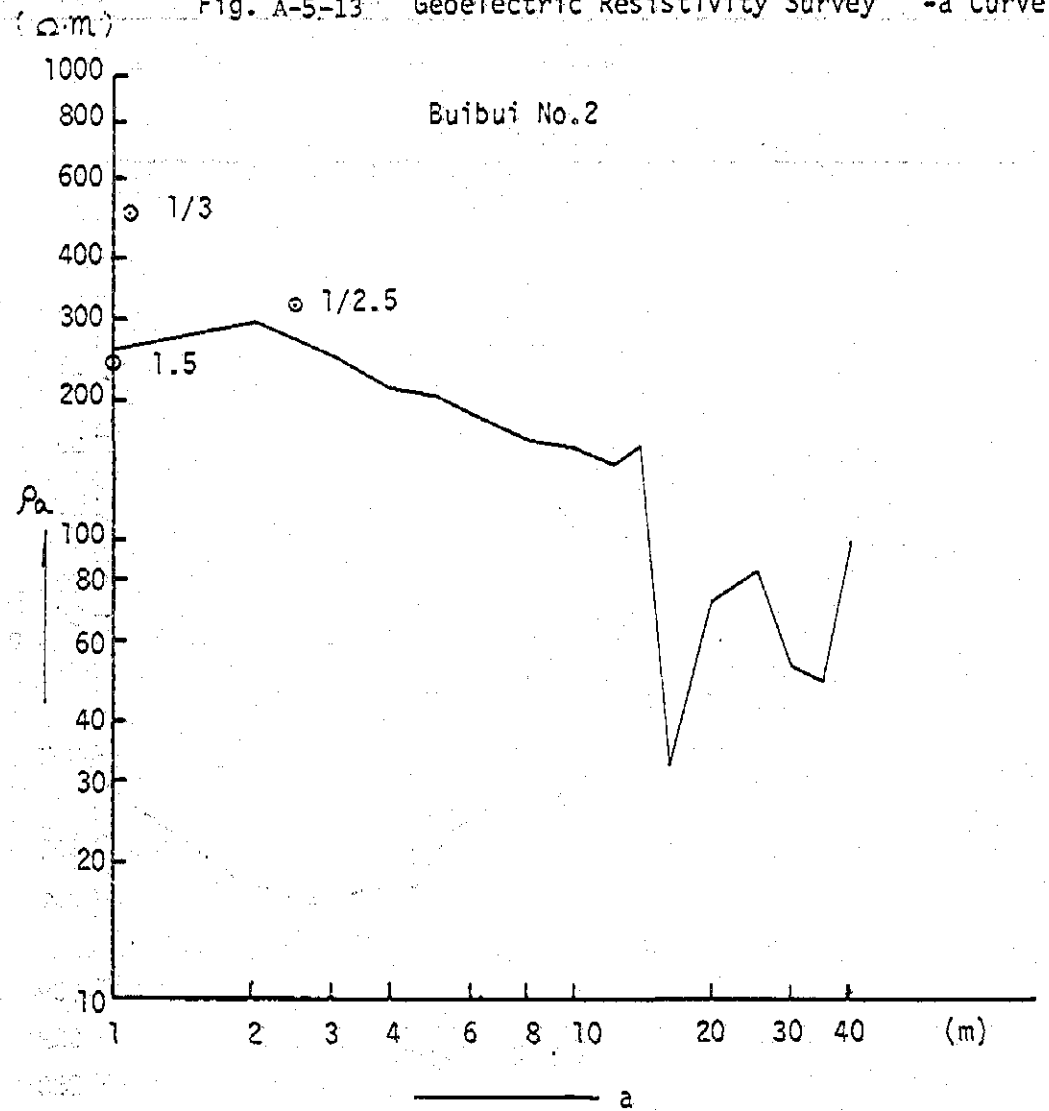

240	360	167	128	Unanalysable (Ω·m)

Fig. A-5-14 Geoelectric Resistivity Survey ρ-a Curve

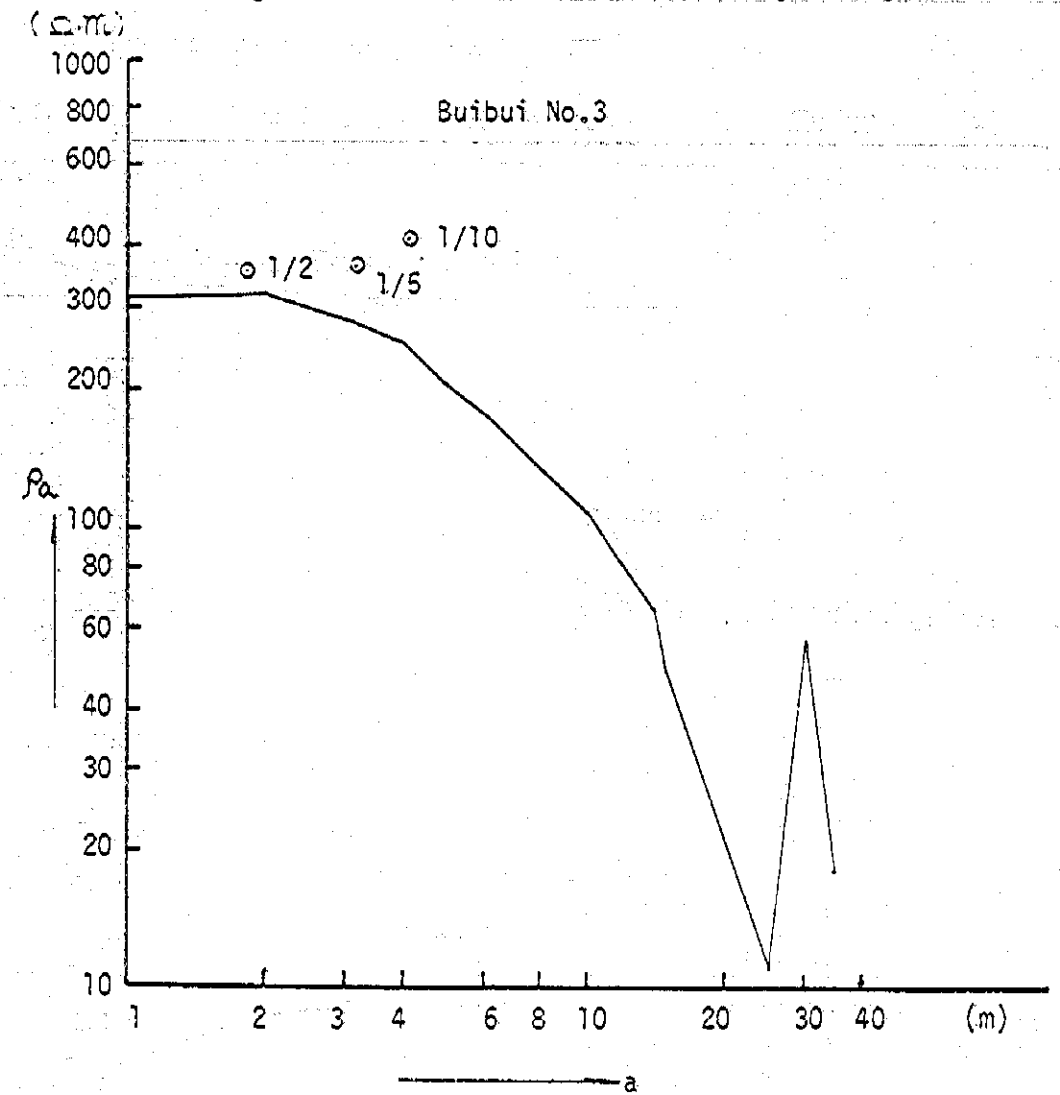

315	157	73	42	Unanalysable (Ω·m)

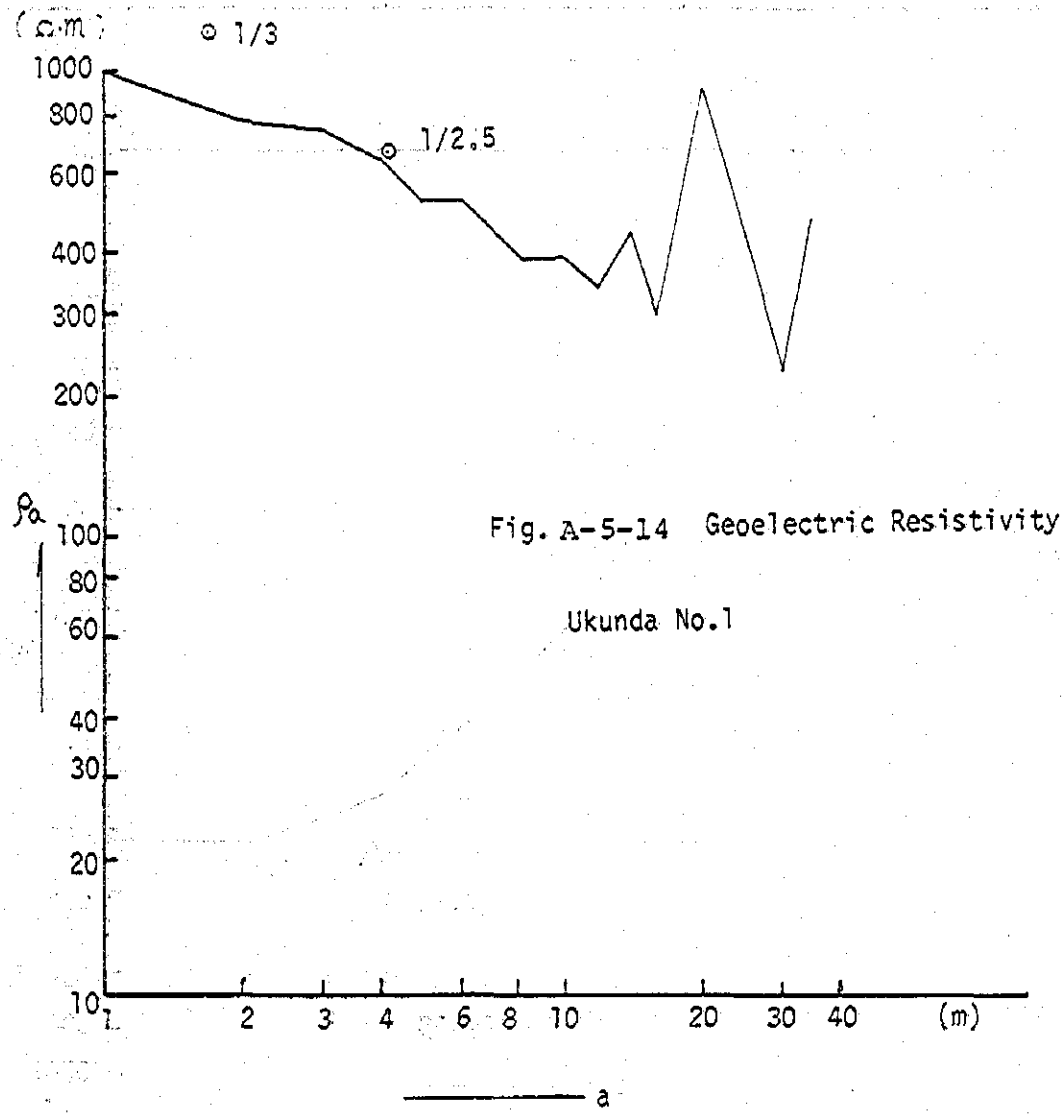

Fig. A-5-14 Geoelectric Resistivity Survey ρ-a Curve

Ukunda No.1

707	403	272	Unanalysable (Ω·m)

Fig. A-5-15 Presumed Columns of Geological Log Based on Geoelectrical Resistivity Method in Fahamuni Camp Area

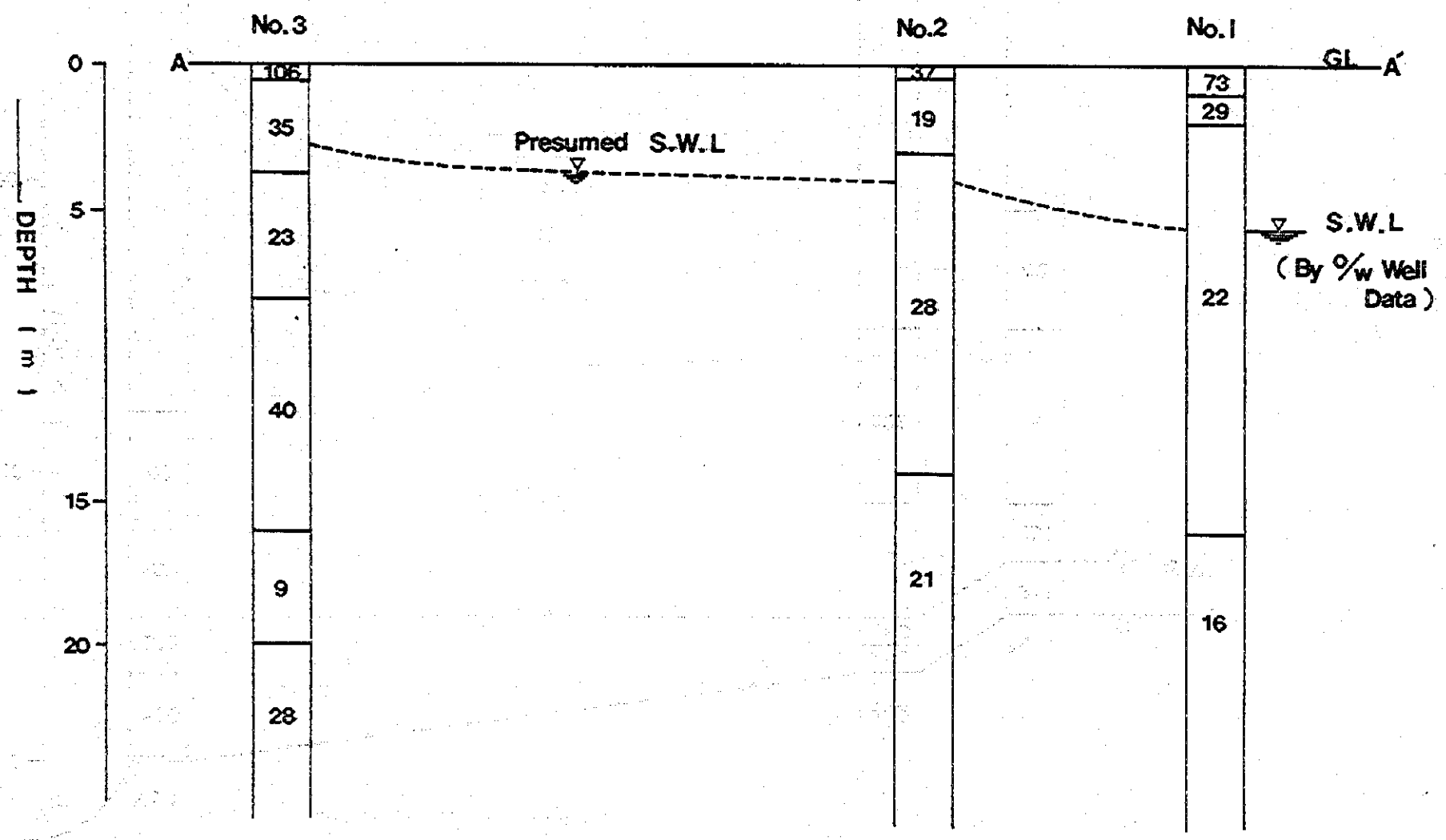

Fig. A – 5-16 Presumed Columns of Geological Log Based on Geoelectrical Resistivity Method in Buibui Camp Area

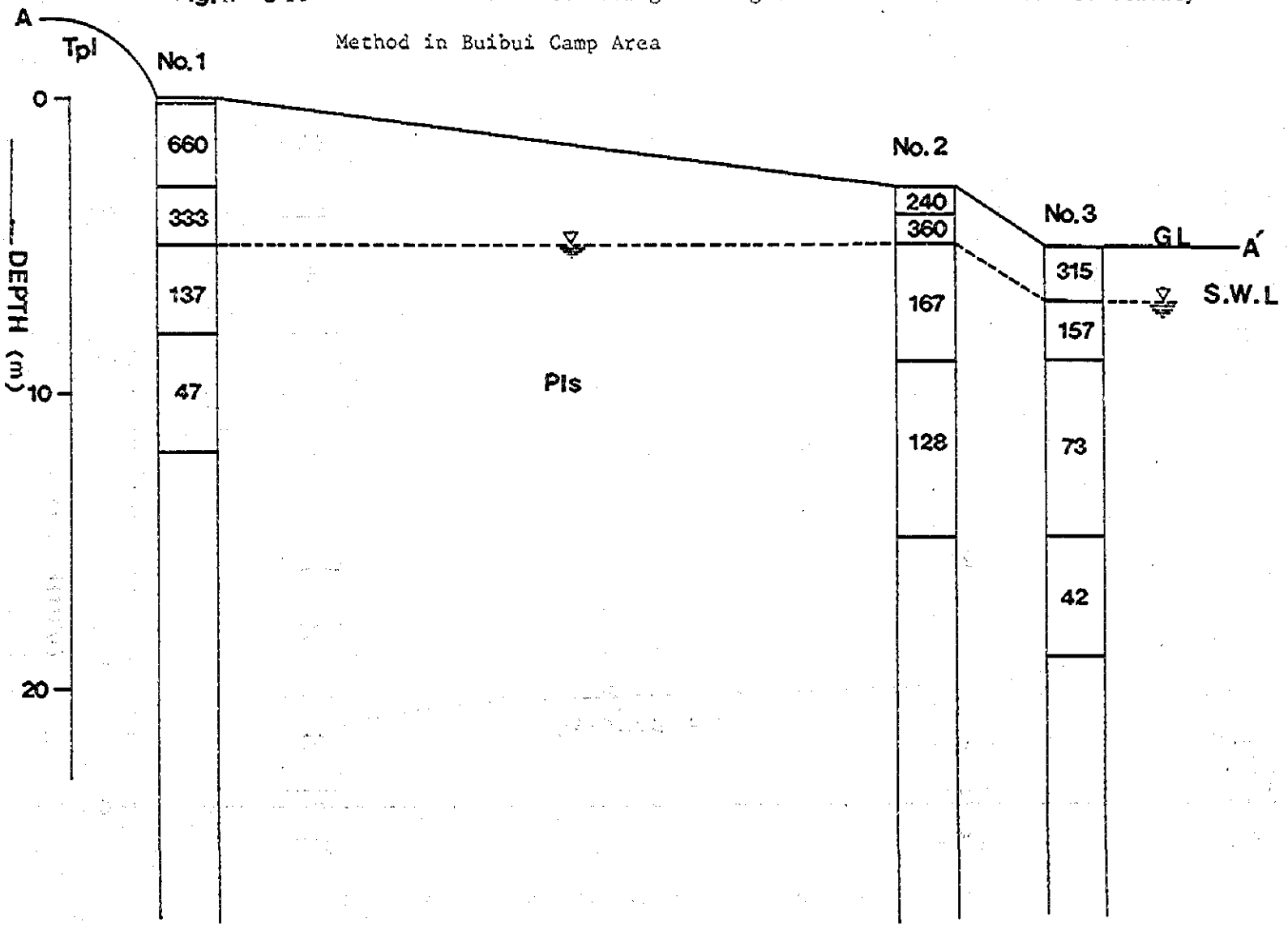

Fig. A-5-17 Presumed Columns of Geological Log Based on Geoelectrical Resistivity Method in Mwachings Area

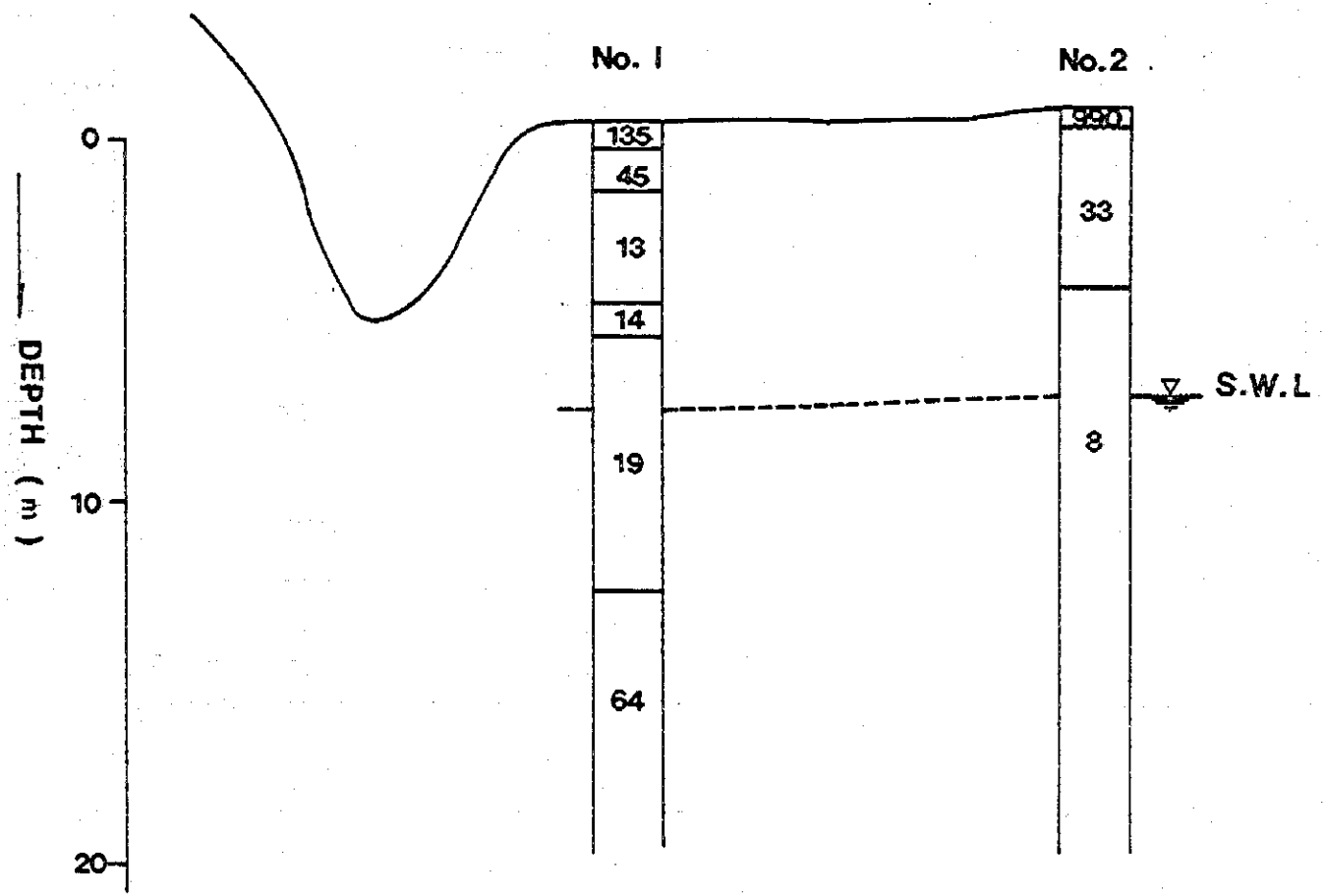

Fig. A-5-18 Presumed Columns of Geological Log Based on Geoelectrical Resistivity Method in Kidimu Camp Area

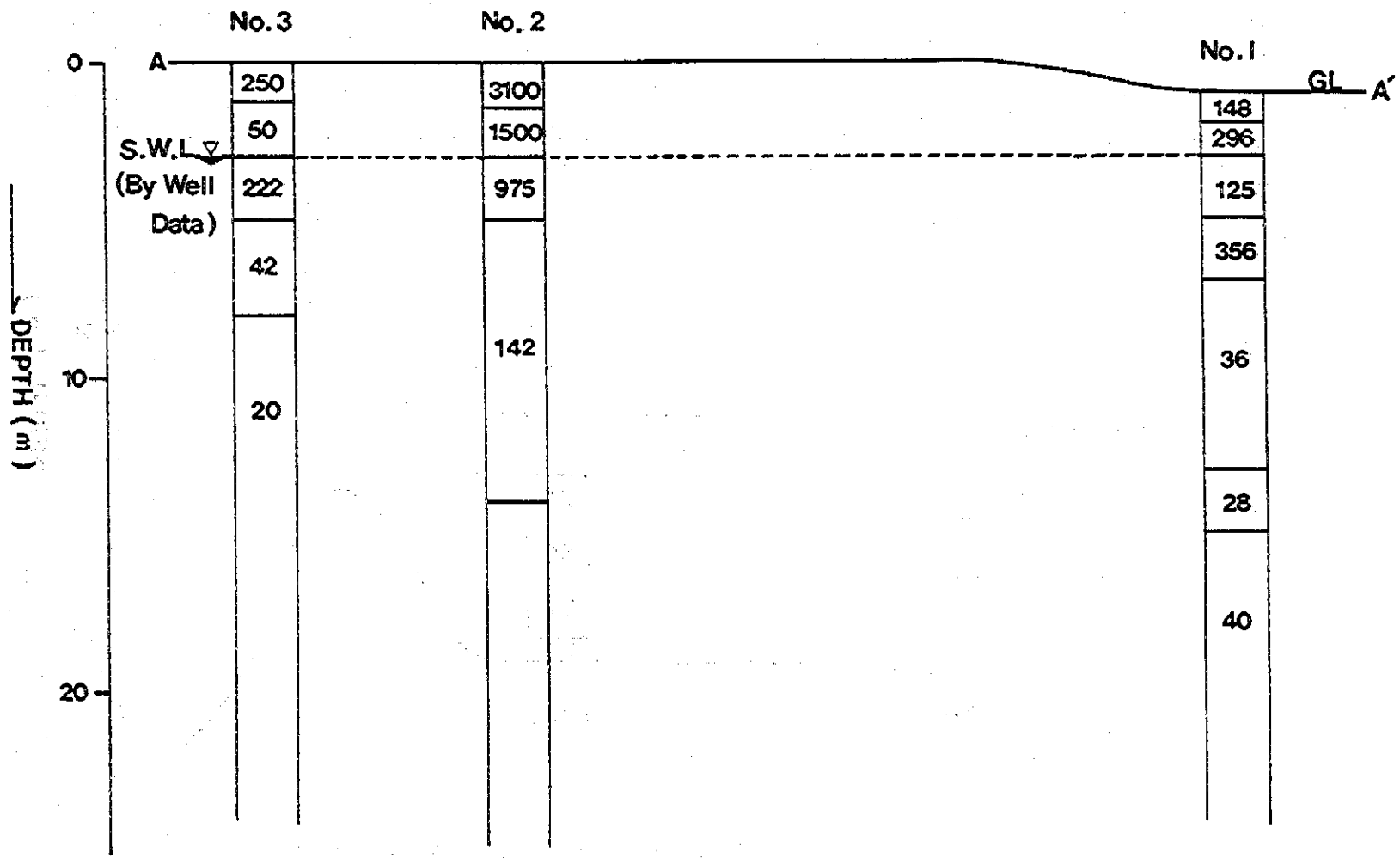

Fig. A-5-19 Presumed Columns Geological Log Based on Geoelectrical Resistivity Method in Kanana Camp Area

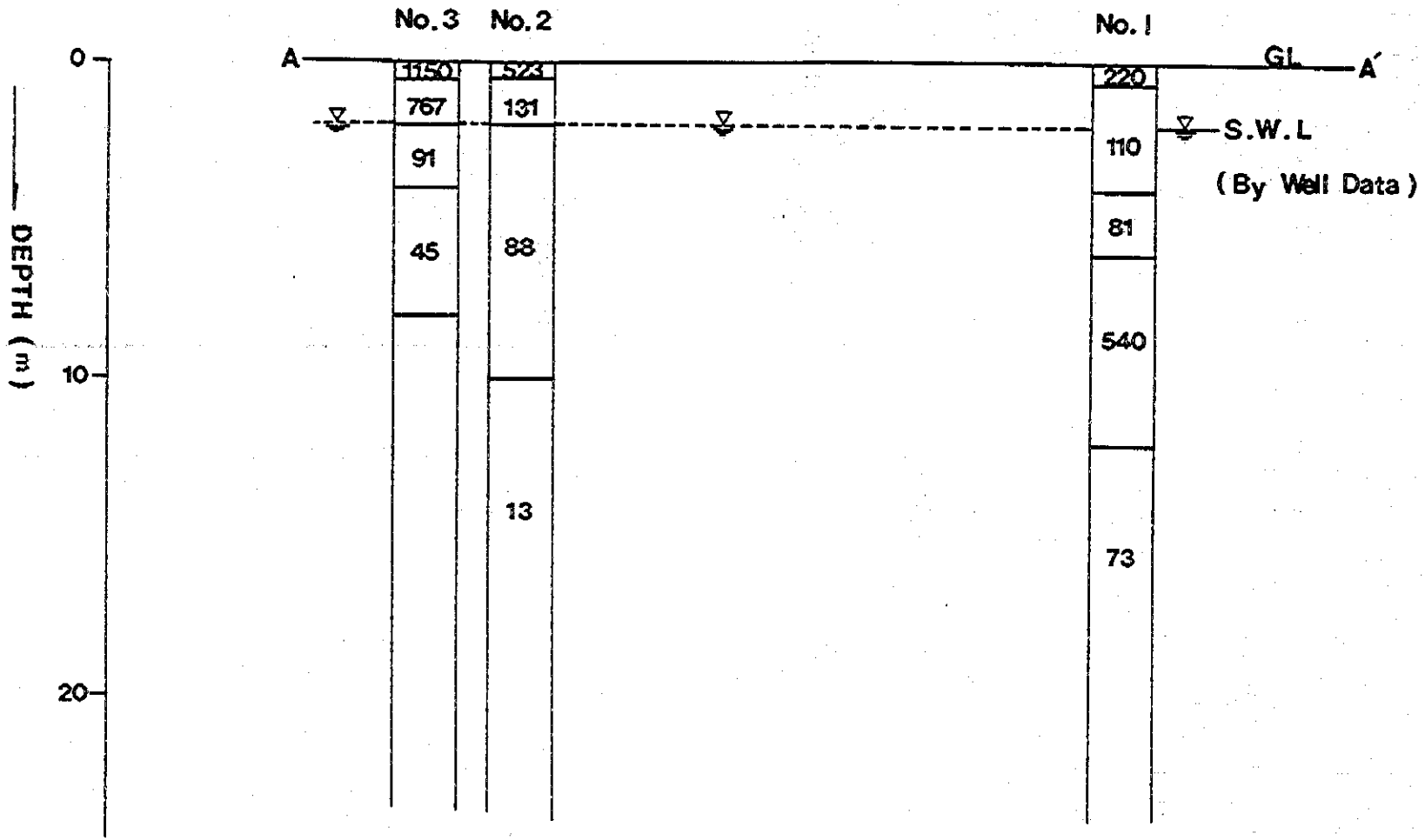

APPENDIX 6 EXISTING WELL DATA (4 Camps)

Table A-6-1 DATA SHEET OF EXISTING WELL/SPRING

Survey NO. B-1

Survey Condition

Date: 4th Feb. Time: 9:40 am Weather: Fine Temperature: 31.5(°C)

Spring Location

BUIBUI Camp (About 200 m distant from Camp)

Detail of ~~Well~~/Spring

Depth of Well : -

Diameter : -

Water Level : G.L. - -

Sketch of Well

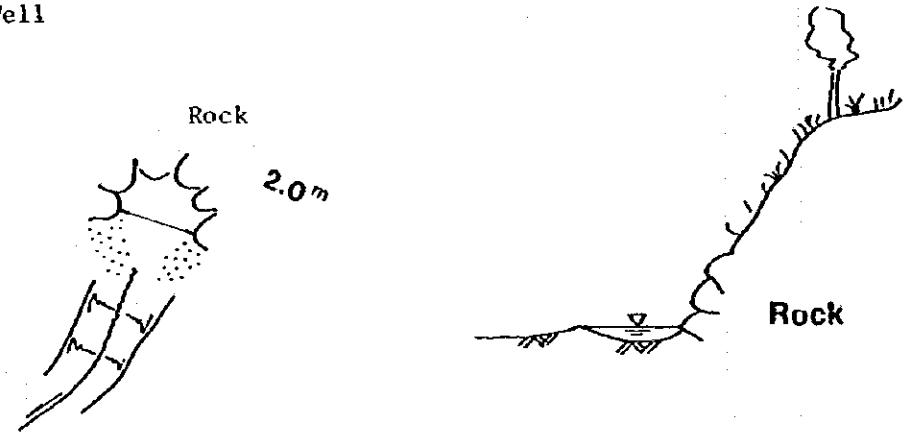

Water Qualitt

Water temp. : 29.7 (°C)

Appearance : Clear

pH : 5.4

Turbidity : 7 (ppm)

Conductivity : 1.5 (m℧/cm)

Desolved Oxygen : 5.6 (ppm)

Coliform Group : (/cc)

Remarks

Table A-6-2 DATA SHEET OF EXISTING WELL/SPRING

Survey NO. F-1

Survey Condition

Date: 28th Jan. Time: 16:25 Weather: Fine Temperature:33.5(°C)

Well Location

FAHAMUNI Camp

Detail of Well/~~Spring~~

Depth of Well : 7.4 (m)

Diameter : 2.1 (m)

Water Level : G.L. - 4.70 (m)

Sketch of Well

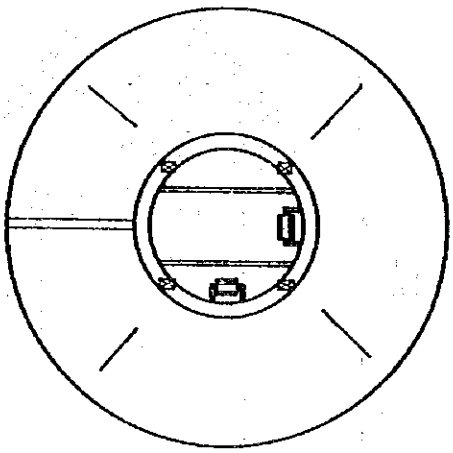

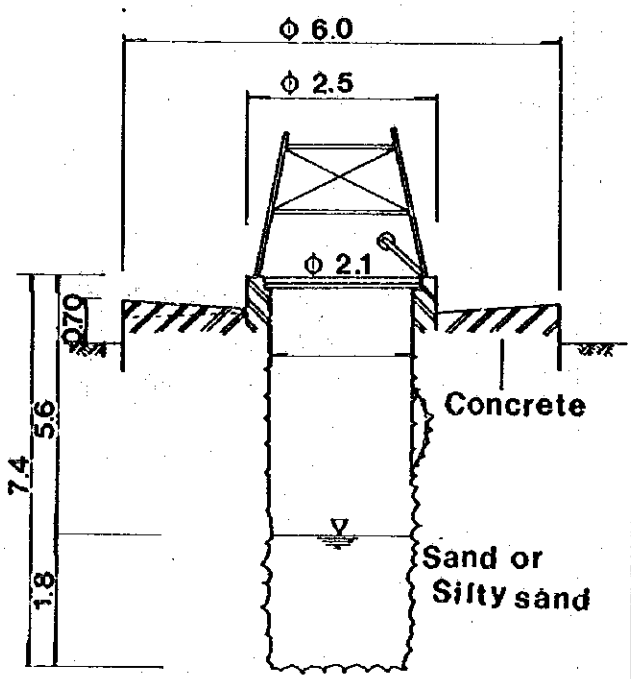

Water Qualitt

Water temp. : 28.9 (°C)

Appearance : Clear

pH : 7.0

Turbidity : 3 (ppm)

Conductivity : 2.4 (m℧/cm)

Desolved Oxygen : 6.4 (ppm)

Coliform Group : (/cc)

Remarks

Table A-6-3 DATA SHEET OF EXISTING WELL/SPRING

Survey NO. K-1

Survey Condition

Date: 28th Jan. Time: 16:07 Weather: Fine Temperature: 34 (°C)

Well Location

KANANA Camp

Detail of Well/Spring

Depth of Well : 3.7 (m)

Diameter : 2.8 (m)

Water Level : G.L. - 1.8 (m)

Sketch of Well (m)

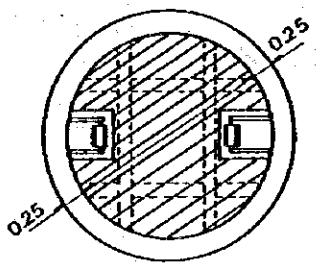

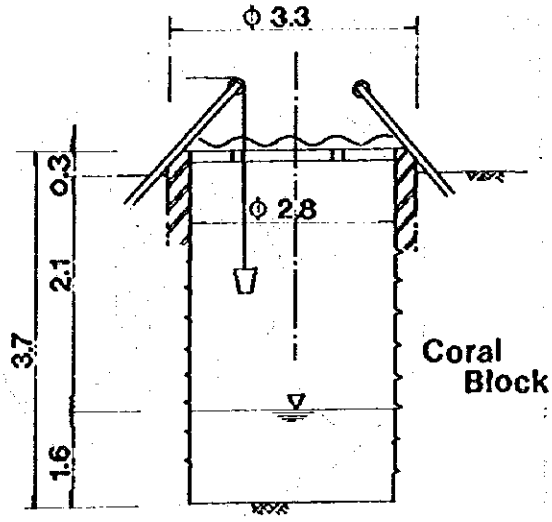

Water Qualitt

Water temp. : 29.7 (°C)

Appearance : Clear

pH : 6.7

Turbidity : 3 (ppm)

Conductivity : 2.3 (m℧/cm)

Desolved Oxygen : 5.0 (ppm)

Coliform Group : (/cc)

Remarks

Table A-6-4 DATA SHEET OF EXISTING WELL/SPRING

Survey NO. K-1

Survey Condition

Date: 27th Jan. Time: 12:00 Weather: Fine Temperature: 34 (° C)

Spring Location

KIDIMU Camp (About 250 m distance from Camp)

Detail of ~~Well~~/Spring

Depth of Well : -

Diameter : -

Water Level : G.L. -

Sketch of Well

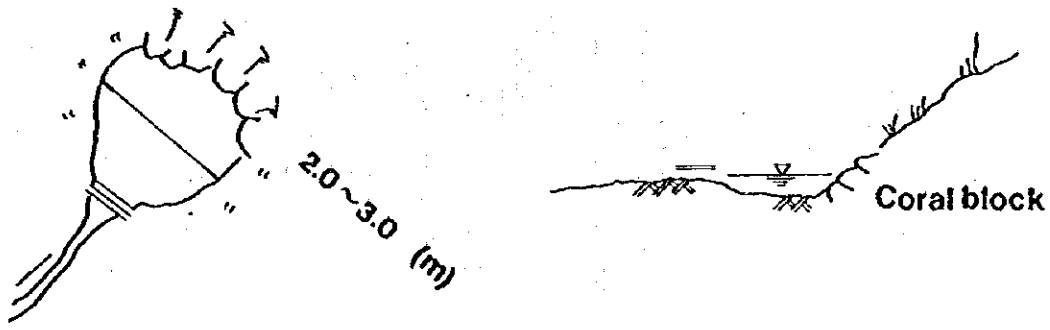

Water Qualitt

Water temp.	:	30.6 (°C)
Appearance	:	Turbid with white & dark green
pH	:	5.6
Turbidity	:	16 (ppm)
Conductivity	:	0.8 (m℧/cm)
Desolved Oxygen	:	5.7 (ppm)
Coliform Group	:	(/cc)

Remarks

Table A-6-5 DATA SHEET OF EXISTING WELL/SPRING

Survey NO. K-2

Survey Condition

Date: 27th Jan. Time: 12:20 Weather: Fine Temperature: 34 (°C)

Well/~~Spring~~ Location

KIDIMU Camp

Detail of Well/~~Spring~~

Depth of Well : 3.1 (m)

Diameter : 0.9 (m)

Water Level : G.L. - 2.5 (m)

Sketch of Well

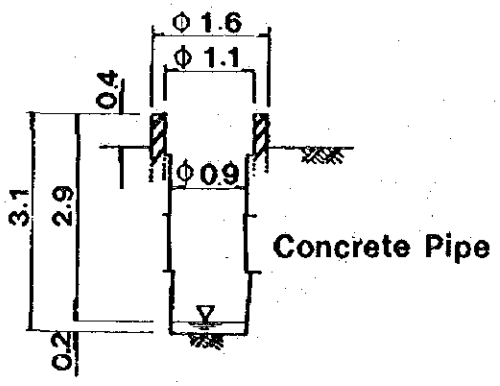

Water Qualitt

Water temp. : 30.0 (°C)

Appearance : Turbid with Brown

pH : 6.4

Turbidity : 12 (ppm)

Conductivity : 1.5 (m℧/cm)

Desolved Oxygen : 5.5 (ppm)

Coliform Group : (/cc)

Remarks

APPENDIX 7 EXISTING WELL DATA (Around Project Area)

Table A- Data of Existing Well around the Project Area

Well No.	Year	Total Depth(m)	W.S.L. (m)	W.R.L. (m)	Yield (m^3/H)	Conductivity	Diameter of Well(m)	Remarks
C2790	1958		170ft	30ft	2800GPH			
C3020			206-285ft		3000GPH			
C5028	1981	30	23-24	5.6	2.6			
C5000	1981	25	16	3.235	18			
C4166	1975	36	10	4.6	6			
C4354	1977	100	5-10	3.3	10.8			
C4977	1981	68	36	4.564	8			
C4240	1976	213.4	11	11.9	4.8			
C2558	1956	220ft	150ft	36-94ft	500GPH			
C2761	1958	98ft	86ft	86ft	720GPH			
C2555	1956	110ft	76ft	60ft	7000GPH			
C3011	1960	208ft	160-190ft	30ft	10000GPH			
C3906	1973	76.21	52.74	35.97	4.81			
C4421	1977	22	9.5	8.55	13.627			
C3904	1973	76.21	20.42	15.54	10.90			
C4536	1978	120	-	29	-			
C4142	1975	159	30-31	23.2	2.5			
C3905	1973	50.91	24.43	15.54	13.63			
C4195	1976	84	25.5	23.5	35.3			
o/w 24		9.10	4.10	-	-	550	2.14	Kiviogo
o/w 25		7.50	5.50	-	-	500	2.20	Fahamuni
o/w 26		8.50	3.20	-	-	630	2.00	Shivazi
o/w 27		3.92	1.62	-	-	410	1.32	Dalgube
o/w 28		2.60	1.30	-	-	420	1.70	Bodo

W.S.L. : Water Struck Level

W.R.L. : Water Rest Level

Fig.A-7 LOCATION OF EXISTING WELLS

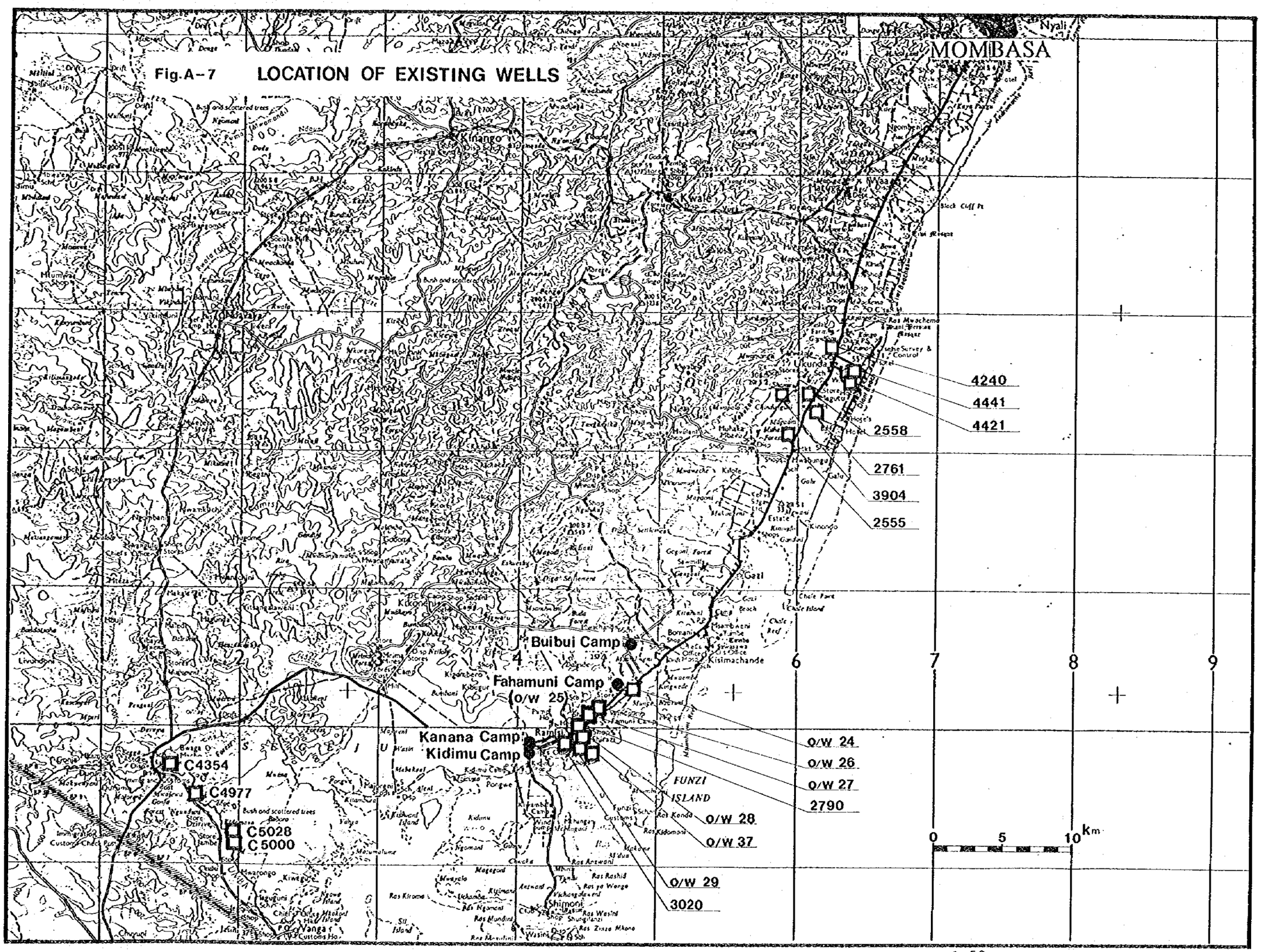

APPENDIX 8 GEOLOGICAL MAP OF THE COAST AREA

Fig. A-8

GEOLOGICAL MAP AROUND PROJECT AREA

PLEISTOCENE	Plc	Raised Coral Reef, Red clay
	Pls	Kilindini Sands
PLIOCENE	Tpl	Magarini Sands

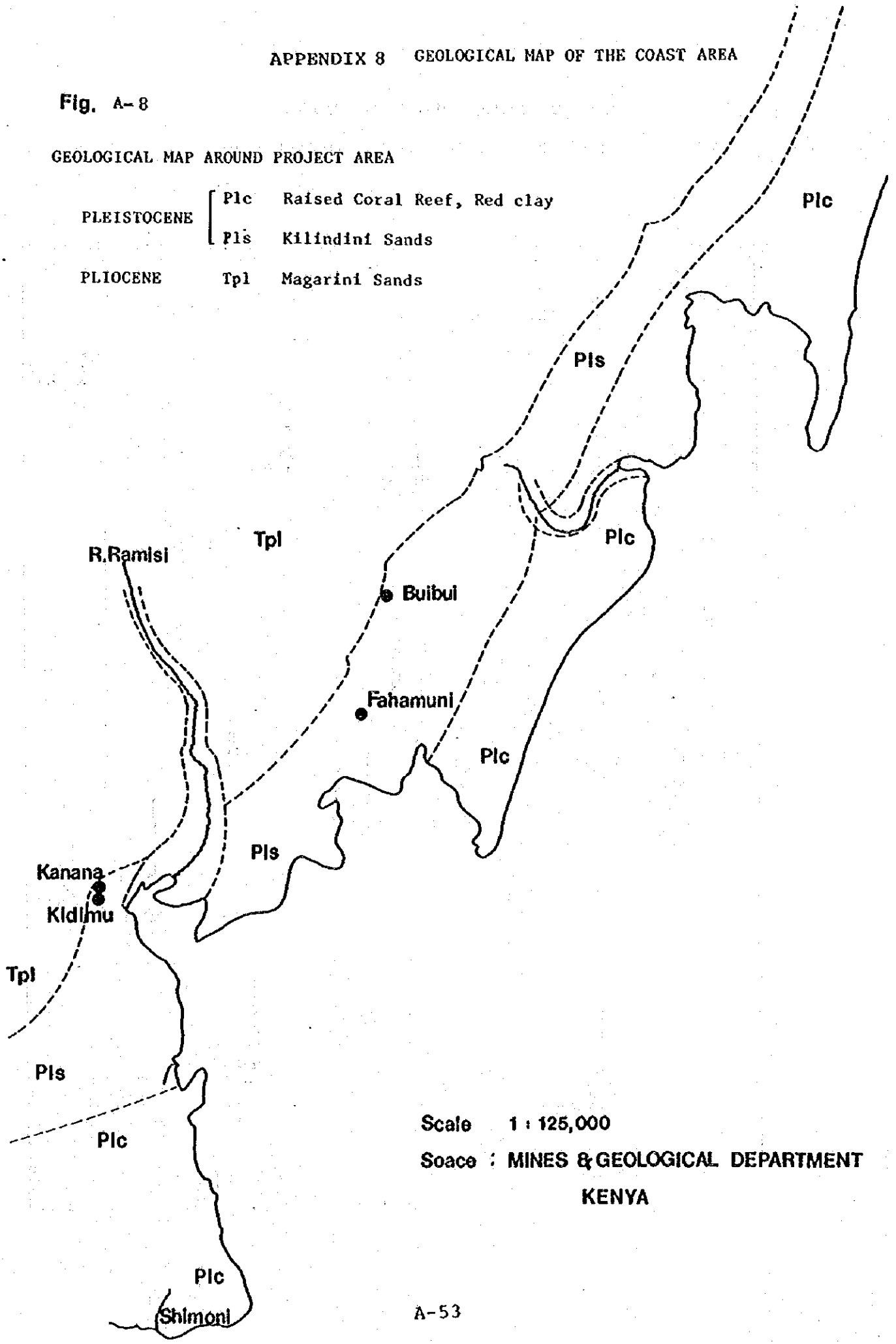

Scale 1 : 125,000

Soace : MINES & GEOLOGICAL DEPARTMENT KENYA

APPENDIX 9 CLIMATOLOGICAL DATA

Fig. A-9 -1 Located columnal diagrams of rainfall

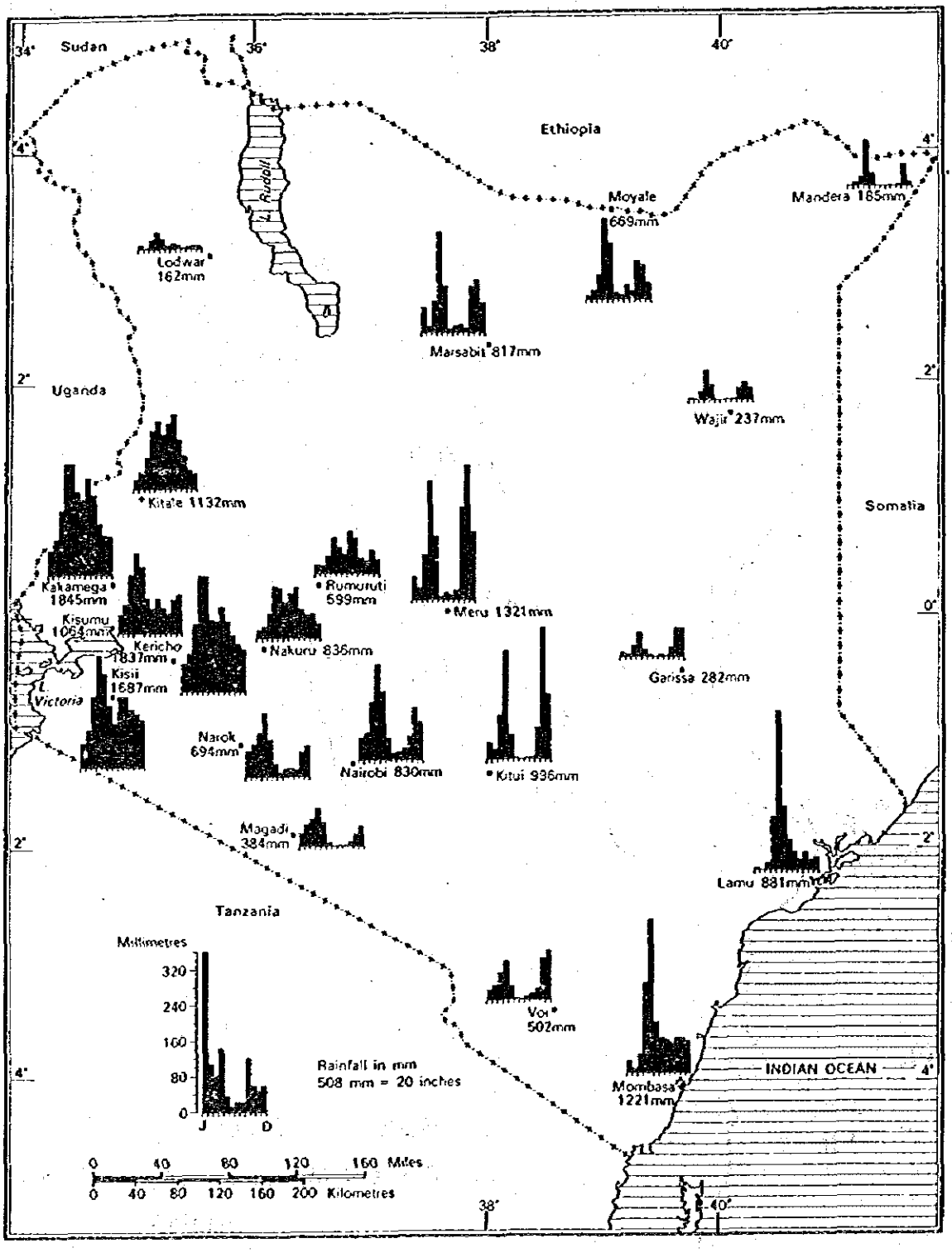

Fig. A-9-2 Annual potential evapolation from open water (Penmen Eo)

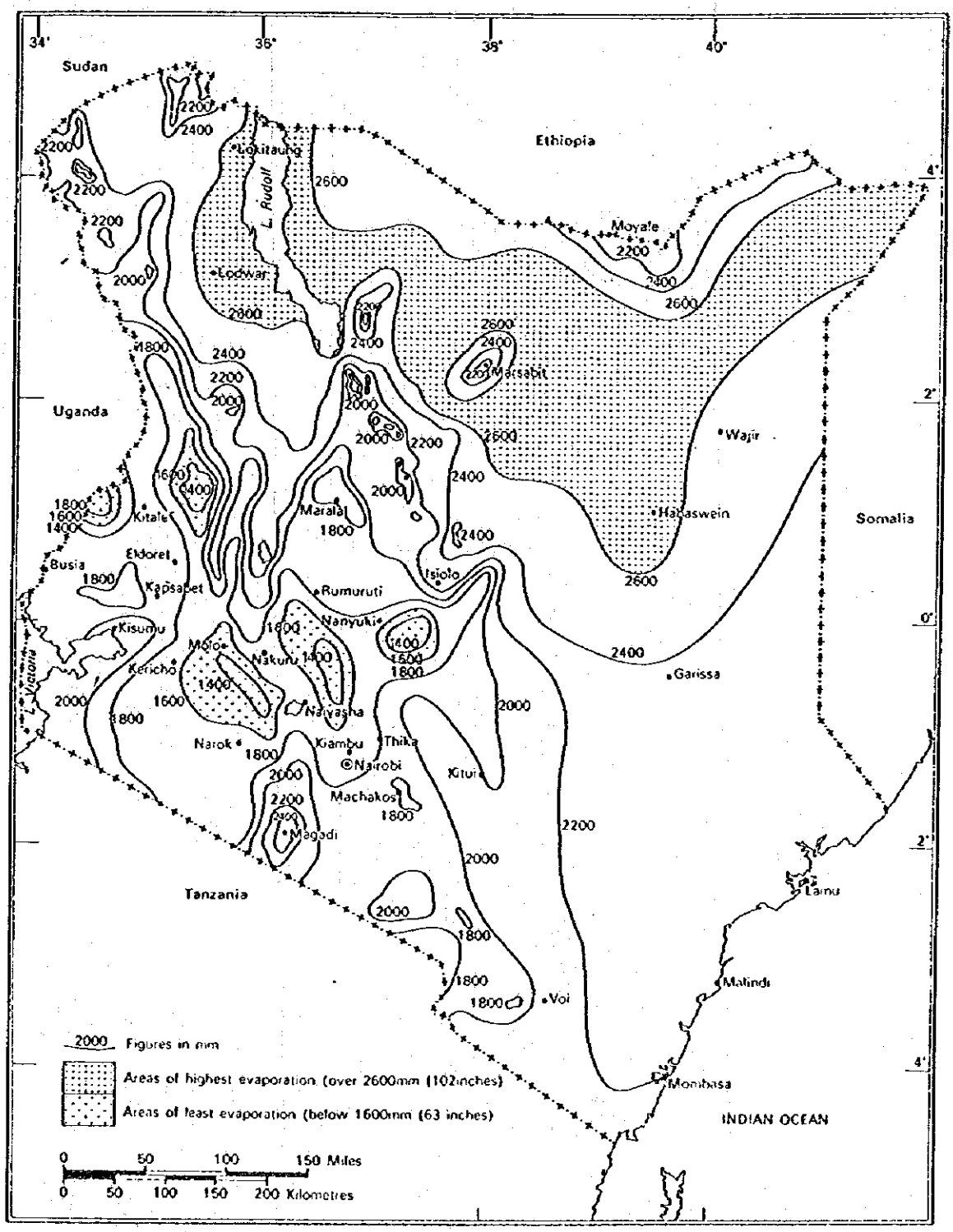

Fig. A-9-3 Temperature

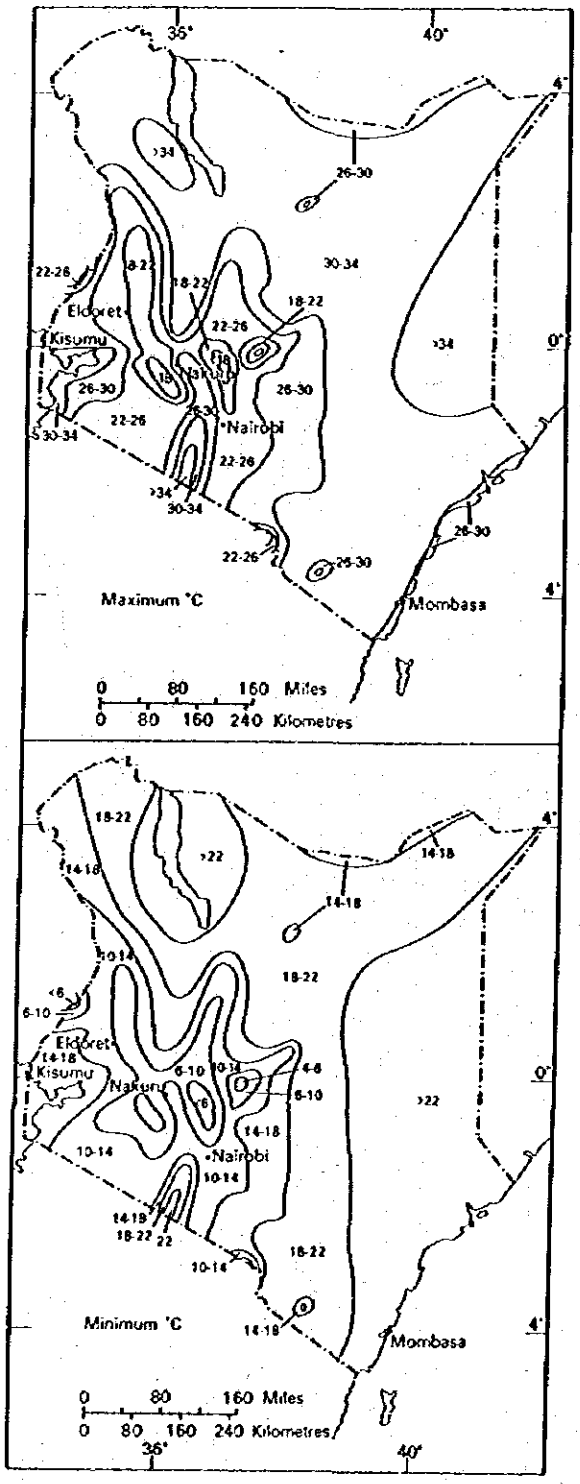

Fig. A-9-4 Relief

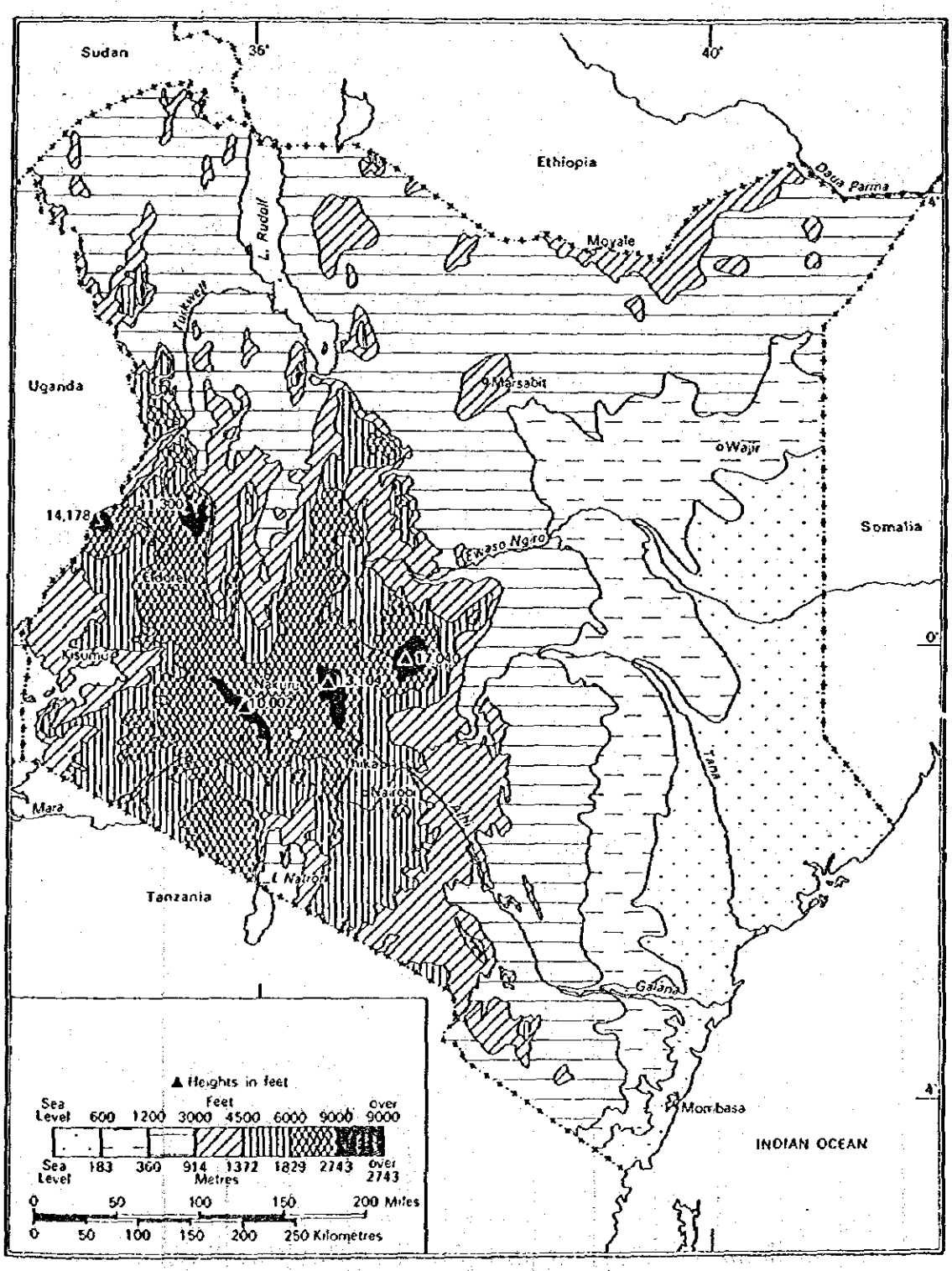

Table A-9-1 Climate of Mombasa

	Rainfall (mm)	Temperature		Related Humidity (at 1200 %)	Sunshine (hours/day)
		Mean Max(°C)	Mean Min(°C)		
Jan.	33.4	32.1	23.2	63	8.6
Feb.	20.1	32.4	23.6	61	9.1
March	54.4	32.7	24.2	63	9.0
April	173.9	31.2	23.8	68	7.5
May	228.2	29.2	22.6	72	6.5
June	75.1	28.5	21.2	68	7.5
July	68.2	27.7	20.3	68	7.0
Aug.	62.6	28.0	20.3	67	7.9
Sept.	77.9	28.9	20.8	65	8.5
Oct.	101.6	29.7	22.0	66	8.7
Nov.	92.8	30.6	23.0	68	9.0
Dec.	69.4	31.6	23.3	67	8.8
Total	1,057.6mm				
Remarks	(*)				

(*) Mean rainfall in 1971 to 1978

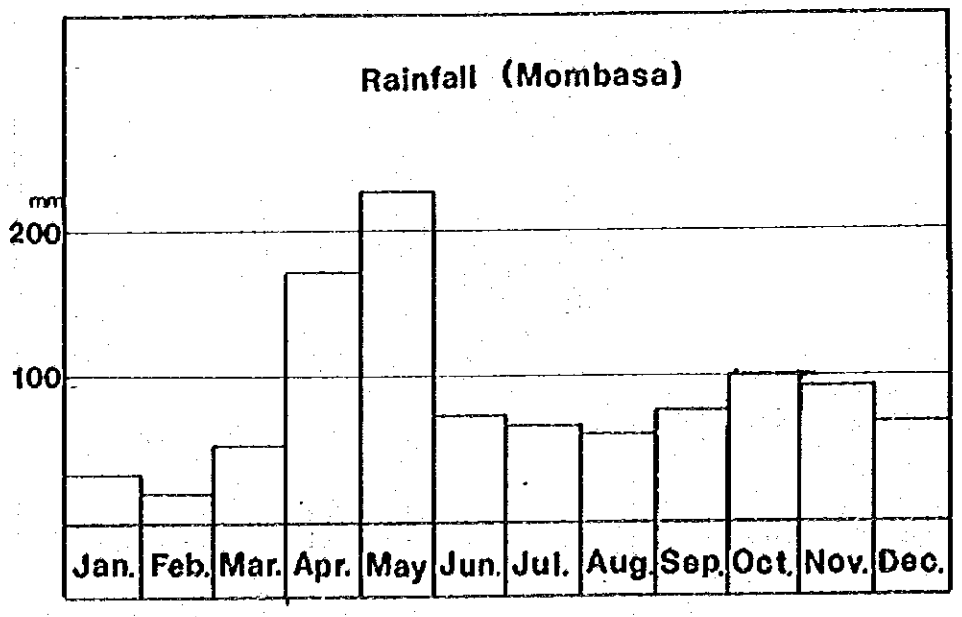

Source ; Meteorological Department

APPENDIX 10 POPULATION DATA

Table A-10-1 Population Changes by Province and District, 1969-79

Province & District	1969	1979	In-crease (%)	Rate of Growth (%)
Nairobi	509,286	827,775	62.5	4.98
Central Pr.	1,675,647	2,345,833	40.0	3.42
Kiambu	475,576	686,290	44.3	3.74
Kirinyaga	216,988	291,431	34.3	2.99
Muranga	445,310	648,333	45.6	3.83
Nyandarua	176,928	233,302	31.9	2.80
Nyeri	360,845	486,477	34.8	3.03
Coast Pr.	944,082	1,342,794	42.2	3.59
Kilifi	307,568	430,986	40.1	3.43
Kwale	205,602	288,363	40.2	3.44
Lamu	22,401	42,299	88.8	6.56
Mombasa	247,073	341,148	38.1	3.28
Taita	110,742	147,597	33.3	2.91
Tana River	50,696	92,401	82.3	6.19
Eastern Pr.	1,907,301	3,719,851	42.6	3.61
Embu	178,912	263,173	47.1	3.93
Isiolo	30,135	43,478	44.3	3.73
Kitui	342,953	464,283	35.4	3.08
Machakos	707,214	1,022,522	44.6	3.76
Marsabit	51,581	96,216	86.5	6.43
Meru	596,506	830,179	39.2	3.36
North Eastern Pr.	245,757	373,787	52.1	4.28
Garissa	64,521	128,867	99.7	7.16
Mandera	95,006	105,609	11.1	1.06
Wajir	86,230	139,319	61.6	4.91

Province & District	1969	1979	In-crease (%)	Rate of Growth (%)
Nyanza Pr.	2,122,045	2,643,956	24.6	2.22
Kisii	675,041	869,512	28.8	2.56
Kisumu	400,643	482,327	20.4	1.87
Siaya	383,188	474,516	23.8	2.16
South Nyanza	663,173	817,601	23.3	2.12
Rift Valley Pr.	2,224,085	3,240,402	45.7	3.84
Kajiado	85,903	149,005	73.5	5.66
Kericho	479,135	633,348	32.2	2.83
Laikipia	66,506	134,524	102.3	7.30
Nakuru	290,853	522,709	79.7	6.04
Nandi	209,068	299,319	43.2	3.65
Narok	125,219	210,306	68.0	5.32
Samburu	69,519	76,908	10.6	1.02
Trans-Nzoia	124,361	259,503	108.7	7.63
Turkana	165,225	142,702	-13.6	-1.29
Uasin Gishu	191,036	300,766	57.4	4.64
West Pokot	96,254	158,652	64.7	5.11
Baringo	161,741	203,792	26.0	2.34
Elegeyo Marakwet	159,265	148,868	-6.5	-0.63
Western Pr.	1,328,298	1,832,663	38.0	3.27
Bungoma	345,226	503,935	46.0	3.85
Busia	200,486	297,841	48.6	4.04
Kakamega	782,586	1,030,887	31.7	2.79
Total Kenya	10,956,501	15,327,061	39.9	3.41

Source: Kenia Population Census, 1979

Table A-10-2 Population of Province and District

Province	District	Male	Female	Total	No.of households	Km^2	Density
Nairobi	-	479,448	348,327	827,775	200,447	684	1,210
Central	Kiambu	344,366	341,924	686,290	142,301	2,448	280
	Kirinyaga	142,986	148,445	291,431	53,729	1,437	202
	Muranga	310,632	337,701	648,333	129,238	2,476	261
	Nyandarua	114,856	118,446	233,302	43,197	3,528	66
	Nyeri	234,405	252,072	486,477	98,222	3,284	148
	Total	1,147,245	1,198,588	2,345,833	366,687	13,173	178
Coast	Kilifi	205,360	225,626	430,986	76,741	12,414	34
	Lamu	21,633	20,666	42,299	8,681	6,506	6
	Kwale	141,746	146,617	288,363	52,261	8,257	34
	Mombasa	189,942	151,206	341,148	82,571	210	1,622
	Taita/ Taveta	72,218	75,379	147,597	31,706	16,959	8
	Tana River	46,647	45,754	92,401	17,239	38,694	2
	Total	677,546	665,248	1,342,794	269,199	83,040	16
Eastern	Embu	127,867	135,306	263,173	50,241	2,714	96
	Isiolo	22,020	21,458	43,478	10,097	25,605	1
	Kitui	215,336	248,947	464,283	86,678	29,388	15
	Machakos	492,937	529,585	1,022,522	185,934	14,178	72
	Marsabit	48,860	47,356	96,216	21,005	73,952	1
	Meru	408,596	421,583	830,179	150,662	9,922	83
	Total	1,315,616	1,404,235	2,719,851	504,617	155,759	17
North-Eastern	Garissa	69,107	59,760	128,867	23,029	43,931	2
	Mandera	54,261	51,340	105,601	20,234	26,470	3
	Wajir	73,156	66,163	139,319	28,709	56,501	2
	Total	196,524	177,263	373,787	71,972	126,902	2
Nyanza	Kisii	423,450	446,062	869,512	141,607	2,196	395
	Kisumu	238,042	244,285	482,327	97,611	2,093	230
	Siaya	215,058	259,458	474,516	89,702	2,522	188
	South Nyanza	395,122	422,479	817,601	134,401	5,714	143
	Total	1,271,672	1,372,284	2,643,956	463,321	12,525	211

Table A-10-2 (Cont.)

Province	District	Male	Female	Total	No.of households	Km^2	Density
Rift Valley	Baringo	101,606	102,186	203,792	42,724	9,885	20
	Elgeyo Marakwet	73,737	75,131	148,868	33,657	2,279	65
	Kajiado	75,137	73,868	149,005	28,571	19,605	7
	Kericho	322,057	311,291	633,348	124,847	3,931	161
	Laikipia	69,548	64,976	134,524	30,281	9,718	13
	Nakuru	268,717	253,992	522,709	114,624	5,769	90
	Nandi	151,996	147,323	299,319	57,521	2,745	109
	Narok	104,727	105,579	210,306	37,747	16,115	13
	Samburu	36,992	39,916	76,908	16,714	17,521	4
	Trans-Nzoia	131,890	127,613	259,503	49,001	2,078	124
	Turkana	72,273	70,429	142,702	22,911	61,768	2
	Uasin Gisku	154,836	145,930	300,766	60,214	3,378	89
	West Pokot	78,625	80,027	158,652	29,141	9,090	17
	Total	1,642,141	1,598,261	3,240,402	647,953	163,883	19
Western	Bungoma	246,841	257,094	503,935	78,971	3,074	163
	Busia	140,142	157,699	297,841	55,105	1,626	183
	Kakamega	489,938	540,949	1,030,887	198,070	3,495	294
	Total	876,921	955,742	1,832,663	332,146	8,196	223
KENYA Total		7,607,113	7,719,948	15,327,061	2,956,369	564,162	27

Source: Kenya Population Census, 1979

Fig. A-4-1 Population distribution, 1962

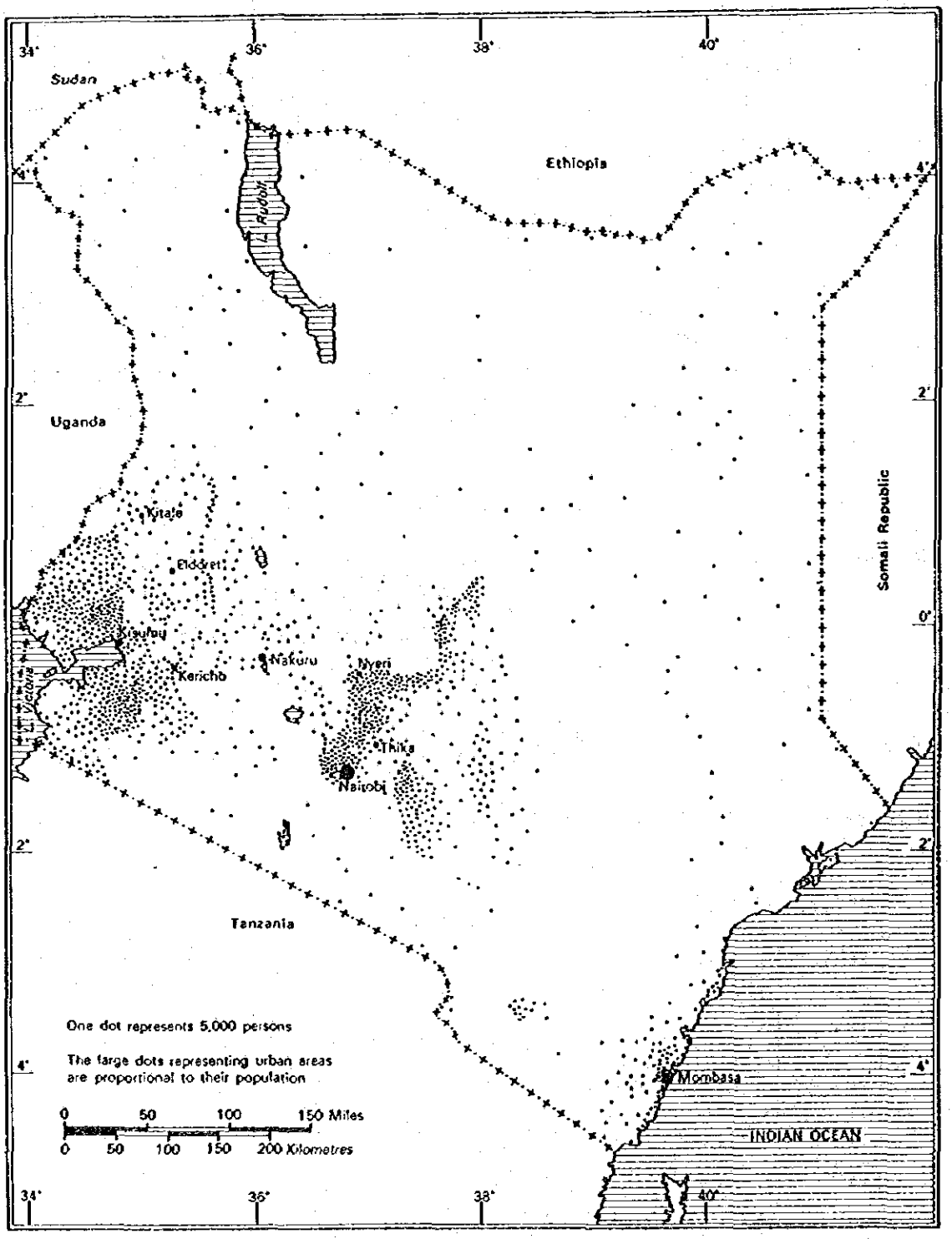

APPENDIX 11 CONSTRUCTION COST DATA

Buibui Camp

BILL OF QUANTITY

B -1

ITEM NO.	WORK DESCRIPTION	Q'TY	UNIT	UNIT PRICE	AMOUNT (Ksh)
1.	Well Construction				
1-1	Well Construction (Ø 2500 m/m)				
1-1-1	Transportation	1	L.S.		
1-1-2	Digging well	10	M		
1-1-3	Furnish and install of well casing	10	M		
1-1-4	Gravel packing and cement sael	1	L.S.		
1-1-5	Covering of well	1	L.S.		
1-1-6	Miscellaneous works and others	1	L.S.		
	Sub-total				10,000.00
1-2	Existing Well Repairing				
1-2-1	Transportation	-	L.S.		
1-2-2	Repairing of well	-	L.S.		
1-2-3	Covering of well	-	L.S.		
1-2-4	Miscellaneous works and others	-	L.S.		
	Sub-total				--
2.	Water Drawing Instruments				
2-1	Windmill				
2-1-1	Transportation	1	L.S.		
2-1-2	Complete windmill unit	1	L.S.		
2-1-3	Install of windmill	1	L.S.		
2-1-4	Miscellaneous works and others	1	L.S.		
	Sub-total				44,505.00
2-2	Windmill Repairing				
2-2-1	Transportation	-	L.S.		
2-2-2	Repairing of existing tower	-	L.S.		
2-2-3	Replace the complete windmill	-	L.S.		
2-2-4	Miscellaneous works and others	-	L.S.		
	Sub-total				--
2-3	Hand Pump				
2-3-1	Transportation	1	L.S.		
2-3-2	Complete hand pump unit	1	L.S.		
2-3-3	Install of hand pump	1	L.S.		
2-3-4	Miscellaneous works and others	1	L.S.		
	Sub-total				8,200.00

ITEM NO.	WORK DESCRIPTION	Q'TY	UNIT	UNIT PRICE	AMOUNT
3.	Construction of Water Reservoir Tank (11 M^3)				
3-1-1	Transportation	1	L.S.		
3-1-2	Basis work and leveling works	1	L.S.		
3-1-3	Furnish and install of water reservoir tank complete with necessary coating	1	L.S.		
3-1-4	Plumbing works	1	L.S.		
3-1-5	Miscellaneous works and others	1	L.S.		
	Sub-total				29,350.00
4.	Communal Water Point				
4-1	Platform around well				
4-1-1	Transportation	1	L.S.		
4-1-2	Earth work and leveling works	1	L.S.		
4-1-3	Gravel foundation works	2.3	M^3		
4-1-4	Concrete works (1:3:6)	2.0	M^3		
4-1-5	Reinforcement bar works	120	Kg		
4-1-6	Forming works	8.0	M^2		
4-1-7	Miscellaneous works and others	1	L.S.		
	Sub-total				3,000.00
4-2	Communal water point				
4-2-1	Transportation	1	L.S.		
4-2-2	Earth work and leveling works	1	L.S.		
4-2-3	Gravel foundation works	2.0	M^3		
4-2-4	Concrete works (1:3:6)	1.7	M^3		
4-2-5	Reinforcement bar works	100	Kg		
4-2-6	Forming works	2.0	M^2		
4-2-7	Concrete brick works	4.0	M^3		
4-2-8	Plastering works (mortar 20m/m)	22.5	M^2		
4-2-9	Furnish and install of roof	13.0	M^2		
4-2-10	Furnish and install of column	1	L.S.		
4-2-11	Plumbing works	1	L.S.		
4-2-12	Miscellaneous works and others	1	L.S.		
	Sub-total				22,000.00

ITEM NO.	WORK DESCRIPTION	Q'TY	UNIT	UNIT PRICE	AMOUNT
5.	Bathing Shed (10 Rooms)				
5-1-1	Transportation	1	L.S.		
5-1-2	Earth work and leveling works	1	L.S.		
5-1-3	Gravel foundation works	7.1	M^3		
5-1-4	Concrete works (1:3:6)	6.5	M^3		
5-1-5	Reinforcement bar works	390	Kg		
5-1-6	Forming works	7.5	M^2		
5-1-7	Concrete brick (wall) works	76.0	M^2		
5-1-8	Plastering works (mortal 20m/m)	31.5	M^2		
5-1-9	Furnish and install of roof	54.0	M^2		
5-1-10	Furnish and install of column	1	L.S.		
5-1-11	Plumbing works	1	L.S.		
5-1-12	Miscellaneous works and others	1	L.S.		
	Sub-total				40,000.00
6.	Waste Water Drainage				
6-1-1	Transportation	1	L.S.		
6-1-2	Earth work and leveling works	1	L.S.		
6-1-3	Concrete works (1:4:6)	0.75	M^3		
6-1-4	Concrete brick works	7.5	M^2		
6-1-5	Gravel works (40-60 m/m)	10.5	M^3		
6-1-6	Ceramic pipe works (Ø100 m/m)	30	M		
6-1-7	Miscellaneous works and others	1	L.S.		
	Sub-total				7,000.00
7.	Distribution Pipe (L=50m X 3 places)				
7-1-1	Transportation	-	L.S.		
7-1-2	Materials for distribution	-	L.S.		
7-1-3	Earth works and installation	-	L.S.		
7-1-4	Miscellaneous works and others	-	L.S.		
	Sub-total				--
Grand	Total				164,055.00

BILL OF QUANTITY

Fahamuni Camp (1) F(1) -1

ITEM NO.	WORK DESCRIPTION	Q'TY	UNIT	UNIT PRICE	AMOUNT (Ksh)
1.	Well Construction				
1-1	Well Construction (Ø 2500 m/m)				
1-1-1	Transportation	-	L.S.		
1-1-2	Digging well	-	M		
1-1-3	Furnish and install of well casing	-	M		
1-1-4	Gravel packing and cement sael	-	L.S.		
1-1-5	Covering of well	-	L.S.		
1-1-6	Miscellaneous works and others	-	L.S.		
	Sub-total				--
1-2	Existing Well Repairing				
1-2-1	Transportation	1	L.S.		
1-2-2	Repairing of well	1	L.S.		
1-2-3	Covering of well	1	L.S.		
1-2-4	Miscellaneous works and others	1	L.S.		
	Sub-total				4,500.oo
2.	Water Drauing Instruments				
2-1	Windmill				
2-1-1	Transportation	-	L.S.		
2-1-2	Complete windmill unit	-	L.S.		
2-1-3	Install of windmill	-	L.S.		
2-1-4	Miscellaneous works and others	-	L.S.		
	Sub-total				--
2-2	Windmill Repairing				
2-2-1	Transportation	1	L.S.		
2-2-2	Repairing of existing tower	1	L.S.		
2-2-3	Replace the complete windmill	1	L.S.		
2-2-4	Miscellaneous works and others	1	L.S.		
	Sub-total				33,350.oo
2-3	Hand Pump				
2-3-1	Transportation	1	L.S.		
2-3-2	Complete hand pump unit	1	L.S.		
2-3-3	Install of hand pump	1	L.S.		
2-3-4	Miscellaneous works and others	1	L.S.		
	Sub-total				8,200.oo

ITEM NO.	WORK DESCRIPTION	Q'TY	UNIT	UNIT PRICE	AMOUNT
3.	Construction of Water Reservoir Tank (11 M^3)				
3-1-1	Transportation	1	L.S.		
3-1-2	Basis work and leveling works	1	L.S.		
3-1-3	Furnish and install of water reservoir tank complete with necessary coating	1	L.S.		
3-1-4	Plumbing works	1	L.S.		
3-1-5	Miscellaneous works and others	1	L.S.		
	Sub-total				29,350.00
4.	Communal Water Point				
4-1	Platform around well				
4-1-1	Transportation	1	L.S.		
4-1-2	Earth work and leveling works	1	L.S.		
4-1-3	Gravel foundation works	2.3	M^3		
4-1-4	Concrete works (1:3:6)	2.0	M^3		
4-1-5	Reinforcement bar works	120	Kg		
4-1-6	Forming works	8.0	M^2		
4-1-7	Miscellaneous works and others	1	L.S.		
	Sub-total				3,000.00
4-2	Communal water point				
4-2-1	Transportation	1	L.S.		
4-2-2	Earth work and leveling works	1	L.S.		
4-2-3	Gravel foundation works	2.0	M^3		
4-2-4	Concrete works (1:3:6)	1.7	M^3		
4-2-5	Reinforcement bar works	100	Kg		
4-2-6	Forming works	2.0	M^2		
4-2-7	Concrete brick works	4.0	M^3		
4-2-8	Plastering works (mortar 20m/m)	25.5	M^2		
4-2-9	Furnish and install of roof	13.0	M^2		
4-2-10	Furnish and install of column	1	L.S.		
4-2-11	Plumbing works	1	L.S.		
4-2-12	Miscellaneous works and others	1	L.S.		
	Sub-total				22,000.00

ITEM NO.	WORK DESCRIPTION	Q'TY	UNIT	UNIT PRICE	AMOUNT
5.	Bathing Shed (10 Rooms)				
5-1-1	Transportation	1	L.S.		
5-1-2	Earth work and leveling works	1	L.S.		
5-1-3	Gravel foundation works	7.1	M^3		
5-1-4	Concrete works (1:3:6)	6.5	M^3		
5-1-5	Reinforcement bar works	390	Kg		
5-1-6	Forming works	7.5	M^2		
5-1-7	Concrete brick (wall) works	76.0	M^2		
5-1-8	Plastering works (mortal 20m/m)	31.5	M^2		
5-1-9	Furnish and install of roof	54.0	M^2		
5-1-10	Furnish and install of column	1	L.S.		
5-1-11	Plumbing works	1	L.S.		
5-1-12	Miscellaneous works and others	1	L.S.		
	Sub-total				40,000.00
6.	Waste Water Drainage				
6-1-1	Transportation	1	L.S.		
6-1-2	Earth work and leveling works	1	L.S.		
6-1-3	Concrete works (1:4:6)	0.75	M^3		
6-1-4	Concrete brick works	7.5	M^2		
6-1-5	Gravel works (40-60 m/m)	10.5	M^3		
6-1-6	Ceramic pipe works (Ø100 m/m)	30	M		
6-1-7	Miscellaneous works and others	1	L.S.		
	Sub-total				7,000.00
7.	Distribution Pipe (L=50^m X 3 places)				
7-1-1	Transportation	-	L.S.		
7-1-2	Materials for distribution	-	L.S.		
7-1-3	Earth works and installation	-	L.S.		
7-1-4	Miscellaneous works and others	-	L.S.		
	Sub-total				--
Grand	Total				147,400.00

BILL OF QUANTITY

Fahamuni Camp (2) F(2) -1

ITEM NO.	WORK DESCRIPTION	Q'TY	UNIT	UNIT PRICE	AMOUNT (Ksh)
1.	Well Construction				
1-1	Well Construction (ø 2500 m/m)				
1-1-1	Transportation	1	L.S.		
1-1-2	Digging well	20	M		
1-1-3	Furnish and install of well casing	20	M		
1-1-4	Gravel packing and cement sael	1	L.S.		
1-1-5	Covering of well	1	L.S.		
1-1-6	Miscellaneous works and others	1	L.S.		
	Sub-total				20,000.00
1-2	Existing Well Repairing				
1-2-1	Transportation	-	L.S.		
1-2-2	Repairing of well	-	L.S.		
1-2-3	Covering of well	-	L.S.		
1-2-4	Miscellaneous works and others	-	L.S.		
	Sub-total				--
2.	Water Drauing Instruments				
2-1	Windmill				
2-1-1	Transportation	-	L.S.		
2-1-2	Complete windmill unit	-	L.S.		
2-1-3	Install of windmill	-	L.S.		
2-1-4	Miscellaneous works and others	-	L.S.		
	Sub-total				--
2-2	Windmill Repairing				
2-2-1	Transportation	-	L.S.		
2-2-2	Repairing of existing tower	-	L.S.		
2-2-3	Replace the complete windmill	-	L.S.		
2-2-4	Miscellaneous works and others	-	L.S.		
	Sub-total				--
2-3	Hand Pump				
2-3-1	Transportation	1	L.S.		
2-3-2	Complete hand pump unit	1	L.S.		
2-3-3	Install of hand pump	1	L.S.		
2-3-4	Miscellaneous works and others	1	L.S.		
	Sub-total				8,200.00

ITEM NO.	WORK DESCRIPTION	Q'TY	UNIT	UNIT PRICE	AMOUNT
3.	Construction of Water Reservoir Tank (11 M^3)				
3-1-1	Transportation	-	L.S.		
3-1-2	Basis work and leveling works	-	L.S.		
3-1-3	Furnish and install of water reservoir tank complete with necessary coating	-	L.S.		
3-1-4	Plumbing works	-	L.S.		
3-1-5	Miscellaneous works and others	-	L.S.		
	Sub-total				--
4.	Communal Water Point				
4-1	Platform around well				
4-1-1	Transportation	1	L.S.		
4-1-2	Earth work and leveling works	1	L.S.		
4-1-3	Gravel foundation works	2.3	M^3		
4-1-4	Concrete works (1:3:6)	2.0	M^3		
4-1-5	Reinforcement bar works	120	Kg		
4-1-6	Forming works	8.0	M^2		
4-1-7	Miscellaneous works and others	1	L.S.		
	Sub-total				3,000.00
4-2	Communal water point				
4-2-1	Transportation	-	L.S.		
4-2-2	Earth work and leveling works	-	L.S.		
4-2-3	Gravel foundation works	-	M^3		
4-2-4	Concrete works (1:3:6)	-	M^3		
4-2-5	Reinforcement bar works	-	Kg		
4-2-6	Forming works	-	M^2		
4-2-7	Concrete brick works	-	M^3		
4-2-8	Plastering works (mortar 20m/m)	-	M^2		
4-2-9	Furnish and install of roof	-	M^2		
4-2-10	Furnish and install of column	-	L.S.		
4-2-11	Plumbing works	-	L.S.		
4-2-12	Miscellaneous works and others	-	L.S.		
	Sub-total				--

ITEM NO.	WORK DESCRIPTION	Q'TY	UNIT	UNIT PRICE	AMOUNT
5.	Bathing Shed (Rooms)				
5-1-1	Transportation	-	L.S.		
5-1-2	Earth work and leveling works	-	L.S.		
5-1-3	Gravel foundation works	-	M^3		
5-1-4	Concrete works (1:3:6)	-	M^3		
5-1-5	Reinforcement bar works	-	Kg		
5-1-6	Forming works	-	M^2		
5-1-7	Concrete brick (wall) works	-	M^2		
5-1-8	Plastering works (mortal 20m/m)	-	M^2		
5-1-9	Furnish and install of roof	-	M^2		
5-1-10	Furnish and install of column	-	L.S.		
5-1-11	Plumbing works	-	L.S.		
5-1-12	Miscellaneous works and others	-	L.S.		
	Sub-total				--
6.	Waste Water Drainage				
6-1-1	Transportation	1	L.S.		
6-1-2	Earth work and leveling works	1	L.S.		
6-1-3	Concrete works (1:4:6)	0.25	M^3		
6-1-4	Concrete brick works	2.5	M^2		
6-1-5	Gravel works (40-60 m/m)	3.5	M^3		
6-1-6	Ceramic pipe works (Ø100 m/m)	10	M		
6-1-7	Miscellaneous works and others	1	L.S.		
	Sub-total				2,000.00
7.	Distribution Pipe (L=50^m X 3 places)				
7-1-1	Transportation	-	L.S.		
7-1-2	Materials for distribution	-	L.S.		
7-1-3	Earth works and installation	-	L.S.		
7-1-4	Miscellaneous works and others	-	L.S.		
	Sub-total				--
Grand	Total				33,200.00

BILL OF QUANTITY

Kanana Camp (1) Ka(1) -1

ITEM NO.	WORK DESCRIPTION	Q'TY	UNIT	UNIT PRICE	AMOUNT (Ksh)
1.	Well Construction				
1-1	Well Construction (Ø 2500 m/m)				
1-1-1	Transportation	-	L.S.		
1-1-2	Digging well	-	M		
1-1-3	Furnish and install of well casing	-	M		
1-1-4	Gravel packing and cement sael	-	L.S.		
1-1-5	Covering of well	-	L.S.		
1-1-6	Miscellaneous works and others	-	L.S.		
	Sub-total				--
1-2	Existing Well Repairing				
1-2-1	Transportation	1	L.S.		
1-2-2	Repairing of well	1	L.S.		
1-2-3	Covering of well	1	L.S.		
1-2-4	Miscellaneous works and others	1	L.S.		
	Sub-total				4,500.oo
2.	Water Drauing Instruments				
2-1	Windmill				
2-1-1	Transportation	-	L.S.		
2-1-2	Complete windmill unit	-	L.S.		
2-1-3	Install of windmill	-	L.S.		
2-1-4	Miscellaneous works and others	-	L.S.		
	Sub-total				--
2-2	Windmill Repairing				
2-2-1	Transportation	-	L.S.		
2-2-2	Repairing of existing tower	-	L.S.		
2-2-3	Replace the complete windmill	-	L.S.		
2-2-4	Miscellaneous works and others	-	L.S.		
	Sub-total				--
2-3	Hand Pump				
2-3-1	Transportation	1	L.S.		
2-3-2	Complete hand pump unit	1	L.S.		
2-3-3	Install of hand pump	1	L.S.		
2-3-4	Miscellaneous works and others	1	L.S.		
	Sub-total				8,200.oo

ITEM NO.	WORK DESCRIPTION	Q'TY	UNIT	UNIT PRICE	AMOUNT
3.	Construction of Water Reservoir Tank (11 M^3)				
3-1-1	Transportation	-	L.S.		
3-1-2	Basis work and leveling works	-	L.S.		
3-1-3	Furnish and install of water reservoir tank complete with necessary coating	-	L.S.		
3-1-4	Plumbing works	-	L.S.		
3-1-5	Miscellaneous works and others	-	L.S.		
	Sub-total				--
4.	Communal Water Point				
4-1	Platform around well				
4-1-1	Transportation	1	L.S.		
4-1-2	Earth work and leveling works	1	L.S.		
4-1-3	Gravel foundation works	2.3	M^3		
4-1-4	Concrete works (1:3:6)	2.0	M^3		
4-1-5	Reinforcement bar works	120	Kg		
4-1-6	Forming works	8.0	M^2		
4-1-7	Miscellaneous works and others	1	L.S.		
	Sub-total				3,000.00
4-2	Communal water point				
4-2-1	Transportation	-	L.S.		
4-2-2	Earth work and leveling works	-	L.S.		
4-2-3	Gravel foundation works	-	M^3		
4-2-4	Concrete works (1:3:6)	-	M^3		
4-2-5	Reinforcement bar works	-	Kg		
4-2-6	Forming works	-	M^2		
4-2-7	Concrete brick works	-	M^3		
4-2-8	Plastering works (mortar 20m/m)	-	M^2		
4-2-9	Furnish and install of roof	-	M^2		
4-2-10	Furnish and install of column	-	L.S.		
4-2-11	Plumbing works	-	L.S.		
4-2-12	Miscellaneous works and others	-	L.S.		
	Sub-total				--

ITEM NO.	WORK DESCRIPTION	Q'TY	UNIT	UNIT PRICE	AMOUNT
5.	Bathing Shed (Rooms)				
5-1-1	Transportation	-	L.S.		
5-1-2	Earth work and leveling works	-	L.S.		
5-1-3	Gravel foundation works	-	M^3		
5-1-4	Concrete works (1:3:6)	-	M^3		
5-1-5	Reinforcement bar works	-	Kg		
5-1-6	Forming works	-	M^2		
5-1-7	Concrete brick (wall) works	-	M^2		
5-1-8	Plastering works (mortal 20m/m)	-	M^2		
5-1-9	Furnish and install of roof	-	M^2		
5-1-10	Furnish and install of column	-	L.S.		
5-1-11	Plumbing works	-	L.S.		
5-1-12	Miscellaneous works and others	-	L.S.		
	Sub-total				--
6.	Waste Water Drainage				
6-1-1	Transportation	1	L.S.		
6-1-2	Earth work and leveling works	1	L.S.		
6-1-3	Concrete works (1:4:6)	0.25	M^3		
6-1-4	Concrete brick works	2.5	M^2		
6-1-5	Gravel works (40-60 m/m)	3.5	M^3		
6-1-6	Ceramic pipe works (Ø100 m/m)	10	M		
6-1-7	Miscellaneous works and others	1	L.S.		
	Sub-total				2,000.00
7.	Distribution Pipe (L=50^m X 3 places)				
7-1-1	Transportation	-	L.S.		
7-1-2	Materials for distribution	-	L.S.		
7-1-3	Earth works and installation	-	L.S.		
7-1-4	Miscellaneous works and others	-	L.S.		
	Sub-total				--
Grand	Total				17,700.00

BILL OF QUANTITY

Kanana Camp (2) Ka(2) -1

ITEM NO.	WORK DESCRIPTION	Q'TY	UNIT	UNIT PRICE	AMOUNT (Ksh)
1.	Well Construction				
1-1	Well Construction (Ø 2500 m/m)				
1-1-1	Transportation	1	L.S.		
1-1-2	Digging well	15	M		
1-1-3	Furnish and install of well casing	15	M		
1-1-4	Gravel packing and cement sael	1	L.S.		
1-1-5	Covering of well	1	L.S.		
1-1-6	Miscellaneous works and others	1	L.S.		
	Sub-total				15,000.oo
1-2	Existing Well Repairing				
1-2-1	Transportation	-	L.S.		
1-2-2	Repairing of well	-	L.S.		
1-2-3	Covering of well	-	L.S.		
1-2-4	Miscellaneous works and others	-	L.S.		
	Sub-total				--
2.	Water Drauing Instruments				
2-1	Windmill				
2-1-1	Transportation	1	L.S.		
2-1-2	Complete windmill unit	1	L.S.		
2-1-3	Install of windmill	1	L.S.		
2-1-4	Miscellaneous works and others	1	L.S.		
	Sub-total				44,505.oo
2-2	Windmill Repairing				
2-2-1	Transportation	-	L.S.		
2-2-2	Repairing of existing tower	-	L.S.		
2-2-3	Replace the complete windmill	-	L.S.		
2-2-4	Miscellaneous works and others	-	L.S.		
	Sub-total				--
2-3	Hand Pump				
2-3-1	Transportation	1	L.S.		
2-3-2	Complete hand pump unit	1	L.S.		
2-3-3	Install of hand pump	1	L.S.		
2-3-4	Miscellaneous works and others	1	L.S.		
	Sub-total				8,200.oo

ITEM NO.	WORK DESCRIPTION	Q'TY	UNIT	UNIT PRICE	AMOUNT
3.	Construction of Water Reservoir Tank (11 M^3)				
3-1-1	Transportation	1	L.S.		
3-1-2	Basis work and leveling works	1	L.S.		
3-1-3	Furnish and install of water reservoir tank complete with necessary coating	1	L.S.		
3-1-4	Plumbing works	1	L.S.		
3-1-5	Miscellaneous works and others	1	L.S.		
	Sub-total				29,350.00
4.	Communal Water Point				
4-1	Platform around well				
4-1-1	Transportation	1	L.S.		
4-1-2	Earth work and leveling works	1	L.S.		
4-1-3	Gravel foundation works	2.3	M^3		
4-1-4	Concrete works (1:3:6)	2.0	M^3		
4-1-5	Reinforcement bar works	120	Kg		
4-1-6	Forming works	8.0	M^2		
4-1-7	Miscellaneous works and others	1	L.S.		
	Sub-total				3,000.00
4-2	Communal water point				
4-2-1	Transportation	1	L.S.		
4-2-2	Earth work and leveling works	1	L.S.		
4-2-3	Gravel foundation works	2.0	M^3		
4-2-4	Concrete works (1:3:6)	1.7	M^3		
4-2-5	Reinforcement bar works	100	Kg		
4-2-6	Forming works	2.0	M^2		
4-2-7	Concrete brick works	4.0	M^3		
4-2-8	Plastering works (mortar 20m/m)	22.5	M^2		
4-2-9	Furnish and install of roof	13.0	M^2		
4-2-10	Furnish and install of column	1	L.S.		
4-2-11	Plumbing works	1	L.S.		
4-2-12	Miscellaneous works and others	1	L.S.		
	Sub-total				22,000.00

ITEM NO.	WORK DESCRIPTION	Q'TY	UNIT	UNIT PRICE	AMOUNT
5.	Bathing Shed (15 Rooms)				
5-1-1	Transportation	1	L.S.		
5-1-2	Earth work and leveling works	1	L.S.		
5-1-3	Gravel foundation works	11.0	M^3		
5-1-4	Concrete works (1:3:6)	10.0	M^3		
5-1-5	Reinforcement bar works	595	Kg		
5-1-6	Forming works	12.5	M^2		
5-1-7	Concrete brick (wall) works	12.0	M^2		
5-1-8	Plastering works (mortal 20m/m)	47.1	M^2		
5-1-9	Furnish and install of roof	81.0	M^2		
5-1-10	Furnish and install of column	1	L.S.		
5-1-11	Plumbing works	1	L.S.		
5-1-12	Miscellaneous works and others	1	L.S.		
	Sub-total				60,000.00
6.	Waste Water Drainage				
6-1-1	Transportation	1	L.S.		
6-1-2	Earth work and leveling works	1	L.S.		
6-1-3	Concrete works (1:4:6)	0.75	M^3		
6-1-4	Concrete brick works	7.5	M^2		
6-1-5	Gravel works (40-60 m/m)	10.5	M^3		
6-1-6	Ceramic pipe works (Ø100 m/m)	30	M		
6-1-7	Miscellaneous works and others	1	L.S.		
	Sub-total				7,000.00
7.	Distribution Pipe (L=50^m X 3 places)				
7-1-1	Transportation	-	L.S.		
7-1-2	Materials for distribution	-	L.S.		
7-1-3	Earth works and installation	-	L.S.		
7-1-4	Miscellaneous works and others	-	L.S.		
	Sub-total				--
Grand	Total				189,055.00

BILL OF QUANTITY

Kidimu Camp

Ki -1

ITEM NO.	WORK DESCRIPTION	Q'TY	UNIT	UNIT PRICE	AMOUNT (Ksh)
1.	Well Construction				
1-1	Well Construction (Ø 2500 m/m)				
1-1-1	Transportation	1	L.S.		
1-1-2	Digging well	15	M		
1-1-3	Furnish and install of well casing	15	M		
1-1-4	Gravel packing and cement sael	1	L.S.		
1-1-5	Covering of well	1	L.S.		
1-1-6	Miscellaneous works and others	1	L.S.		
	Sub-total				15,000.00
1-2	Existing Well Repairing				
1-2-1	Transportation	-	L.S.		
1-2-2	Repairing of well	-	L.S.		
1-2-3	Covering of well	-	L.S.		
1-2-4	Miscellaneous works and others	-	L.S.		
	Sub-total				--
2.	Water Drauing Instruments				
2-1	Windmill				
2-1-1	Transportation	1	L.S.		
2-1-2	Complete windmill unit	1	L.S.		
2-1-3	Install of windmill	1	L.S.		
2-1-4	Miscellaneous works and others	1	L.S.		
	Sub-total				44,505.00
2-2	Windmill Repairing				
2-2-1	Transportation	-	L.S.		
2-2-2	Repairing of existing tower	-	L.S.		
2-2-3	Replace the complete windmill	-	L.S.		
2-2-4	Miscellaneous works and others	-	L.S.		
	Sub-total				--
2-3	Hand Pump				
2-3-1	Transportation	1	L.S.		
2-3-2	Complete hand pump unit	1	L.S.		
2-3-3	Install of hand pump	1	L.S.		
2-3-4	Miscellaneous works and others	1	L.S.		
	Sub-total				8,200.00

ITEM NO.	WORK DESCRIPTION	Q'TY	UNIT	UNIT PRICE	AMOUNT
3.	Construction of Water Reservoir Tank (11 M^3)				
3-1-1	Transportation	1	L.S.		
3-1-2	Basis work and leveling works	1	L.S.		
3-1-3	Furnish and install of water reservoir tank complete with necessary coating	1	L.S.		
3-1-4	Plumbing works	1	L.S.		
3-1-5	Miscellaneous works and others	1	L.S.		
	Sub-total				29.350.00
4.	Communal Water Point				
4-1	Platform around well				
4-1-1	Transportation	1	L.S.		
4-1-2	Earth work and leveling works	1	L.S.		
4-1-3	Gravel foundation works	2.3	M^3		
4-1-4	Concrete works (1:3:6)	2.0	M^3		
4-1-5	Reinforcement bar works	120	Kg		
4-1-6	Forming works	8.0	M^2		
4-1-7	Miscellaneous works and others	1	L.S.		
	Sub-total				3,000.00
4-2	Communal water point				
4-2-1	Transportation	1	L.S.		
4-2-2	Earth work and leveling works	1	L.S.		
4-2-3	Gravel foundation works	2.0	M^3		
4-2-4	Concrete works (1:3:6)	1.7	M^3		
4-2-5	Reinforcement bar works	100	Kg		
4-2-6	Forming works	2.0	M^2		
4-2-7	Concrete brick works	4.0	M^3		
4-2-8	Plastering works (mortar 20m/m)	25.5	M^2		
4-2-9	Furnish and install of roof	13.0	M^2		
4-2-10	Furnish and install of column	1	L.S.		
4-2-11	Plumbing works	1	L.S.		
4-2-12	Miscellaneous works and others	1	L.S.		
	Sub-total				22,000.00

ITEM NO.	WORK DESCRIPTION	Q'TY	UNIT	UNIT PRICE	AMOUNT
5.	Bathing Shed (10 Rooms)				
5-1-1	Transportation	1	L.S.		
5-1-2	Earth work and leveling works	1	L.S.		
5-1-3	Gravel foundation works	7.1	M^3		
5-1-4	Concrete works (1:3:6)	6.5	M^3		
5-1-5	Reinforcement bar works	390	Kg		
5-1-6	Forming works	7.5	M^2		
5-1-7	Concrete brick (wall) works	76.0	M^2		
5-1-8	Plastering works (mortal 20m/m)	31.5	M^2		
5-1-9	Furnish and install of roof	54.0	M^2		
5-1-10	Furnish and install of column	1	L.S.		
5-1-11	Plumbing works	1	L.S.		
5-1-12	Miscellaneous works and others	1	L.S.		
	Sub-total				40,000.00
6.	Waste Water Drainage				
6-1-1	Transportation	1	L.S.		
6-1-2	Earth work and leveling works	1	L.S.		
6-1-3	Concrete works (1:4:6)	0.75	M^3		
6-1-4	Concrete brick works	7.5	M^2		
6-1-5	Gravel works (40-60 m/m)	10.5	M^3		
6-1-6	Ceramic pipe works (Ø100 m/m)	30	M		
6-1-7	Miscellaneous works and others	1	L.S.		
	Sub-total				7,000.00
7.	Distribution Pipe (L=50^m X 3 places)				
7-1-1	Transportation	-	L.S.		
7-1-2	Materials for distribution	-	L.S.		
7-1-3	Earth works and installation	-	L.S.		
7-1-4	Miscellaneous works and others	-	L.S.		
	Sub-total				--
Grand	Total				169,055.00

BILL OF QUANTITY

Other Camp (1 Camp) O -1

ITEM NO.	WORK DESCRIPTION	Q'TY	UNIT	UNIT PRICE	AMOUNT (Ksh)
1.	Well Construction				
1-1	Well Construction (ø 2500 m/m)				
1-1-1	Transportation	1	L.S.		
1-1-2	Digging well	17	M		
1-1-3	Furnish and install of well casing	17	M		
1-1-4	Gravel packing and cement sael	1	L.S.		
1-1-5	Covering of well	1	L.S.		
1-1-6	Miscellaneous works and others	1	L.S.		
	Sub-total				17,000.oo
1-2	Existing Well Repairing				
1-2-1	Transportation	-	L.S.		
1-2-2	Repairing of well	-	L.S.		
1-2-3	Covering of well	-	L.S.		
1-2-4	Miscellaneous works and others	-	L.S.		
	Sub-total				--
2.	Water Drauing Instruments				
2-1	Windmill				
2-1-1	Transportation	-	L.S.		
2-1-2	Complete windmill unit	-	L.S.		
2-1-3	Install of windmill	-	L.S.		
2-1-4	Miscellaneous works and others	-	L.S.		
	Sub-total				--
2-2	Windmill Repairing				
2-2-1	Transportation	-	L.S.		
2-2-2	Repairing of existing tower	-	L.S.		
2-2-3	Replace the complete windmill	-	L.S.		
2-2-4	Miscellaneous works and others	-	L.S.		
	Sub-total				--
2-3	Hand Pump				
2-3-1	Transportation	1	L.S.		
2-3-2	Complete hand pump unit	1	L.S.		
2-3-3	Install of hand pump	1	L.S.		
2-3-4	Miscellaneous works and others	1	L.S.		
	Sub-total				8,200.oo

ITEM NO.	WORK DESCRIPTION	Q'TY	UNIT	UNIT PRICE	AMOUNT
3.	Construction of Water Reservoir Tank (11 M^3)				
3-1-1	Transportation	-	L.S.		
3-1-2	Basis work and leveling works	-	L.S.		
3-1-3	Furnish and install of water reservoir tank complete with necessary coating	-	L.S.		
3-1-4	Plumbing works	-	L.S.		
3-1-5	Miscellaneous works and others	-	L.S.		
	Sub-total				--
4.	Communal Water Point				
4-1	Platform around well				
4-1-1	Transportation	1	L.S.		
4-1-2	Earth work and leveling works	1	L.S.		
4-1-3	Gravel foundation works	2.3	M^3		
4-1-4	Concrete works (1:3:6)	2.0	M^3		
4-1-5	Reinforcement bar works	120	Kg		
4-1-6	Forming works	8.0	M^2		
4-1-7	Miscellaneous works and others	1	L.S.		
	Sub-total				3,000.oo
4-2	Communal water point				
4-2-1	Transportation	-	L.S.		
4-2-2	Earth work and leveling works	-	L.S.		
4-2-3	Gravel foundation works	-	M^3		
4-2-4	Concrete works (1:3:6)	-	M^3		
4-2-5	Reinforcement bar works	-	Kg		
4-2-6	Forming works	-	M^2		
4-2-7	Concrete brick works	-	M^3		
4-2-8	Plastering works (mortar 20m/m)	-	M^2		
4-2-9	Furnish and install of roof	-	M^2		
4-2-10	Furnish and install of column	-	L.S.		
4-2-11	Plumbing works	-	L.S.		
4-2-12	Miscellaneous works and others	-	L.S.		
	Sub-total				--

ITEM NO.	WORK DESCRIPTION	Q'TY	UNIT	UNIT PRICE	AMOUNT
5.	Bathing Shed (Rooms)				
5-1-1	Transportation	-	L.S.		
5-1-2	Earth work and leveling works	-	L.S.		
5-1-3	Gravel foundation works	-	M^3		
5-1-4	Concrete works (1:3:6)	-	M^3		
5-1-5	Reinforcement bar works	-	Kg		
5-1-6	Forming works	-	M^2		
5-1-7	Concrete brick (wall) works	-	M^2		
5-1-8	Plastering works (mortal 20m/m)	-	M^2		
5-1-9	Furnish and install of roof	-	M^2		
5-1-10	Furnish and install of column	-	L.S.		
5-1-11	Plumbing works	-	L.S.		
5-1-12	Miscellaneous works and others	-	L.S.		
	Sub-total				--
6.	Waste Water Drainage				
6-1-1	Transportation	1	L.S.		
6-1-2	Earth work and leveling works	1	L.S.		
6-1-3	Concrete works (1:4:6)	0.25	M^3		
6-1-4	Concrete brick works	2.5	M^2		
6-1-5	Gravel works (40-60 m/m)	3.5	M^3		
6-1-6	Ceramic pipe works (Ø100 m/m)	10	M		
6-1-7	Miscellaneous works and others	1	L.S.		
	Sub-total				2,000.00
7.	Distribution Pipe (L=50^m X 3 places)				
7-1-1	Transportation	-	L.S.		
7-1-2	Materials for distribution	-	L.S.		
7-1-3	Earth works and installation	-	L.S.		
7-1-4	Miscellaneous works and others	-	L.S.		
	Sub-total				--
Grand	Total				30,200.00

BILL OF QUANTITY

Mwachinga (1 Point) M -1

ITEM NO.	WORK DESCRIPTION	Q'TY	UNIT	UNIT PRICE	AMOUNT (Ksh)
1.	Well Construction				
1-1	Well Construction (Ø 2500 m/m)				
1-1-1	Transportation	-	L.S.		
1-1-2	Digging well	-	M		
1-1-3	Furnish and install of well casing	-	M		
1-1-4	Gravel packing and cement sael	-	L.S.		
1-1-5	Covering of well	-	L.S.		
1-1-6	Miscellaneous works and others	-	L.S.		
	Sub-total				--
1-2	Existing Well Repairing				
1-2-1	Transportation	-	L.S.		
1-2-2	Repairing of well	-	L.S.		
1-2-3	Covering of well	-	L.S.		
1-2-4	Miscellaneous works and others	-	L.S.		
	Sub-total				--
2.	Water Drauing Instruments				
2-1	Windmill				
2-1-1	Transportation	-	L.S.		
2-1-2	Complete windmill unit	-	L.S.		
2-1-3	Install of windmill	-	L.S.		
2-1-4	Miscellaneous works and others	-	L.S.		
	Sub-total				--
2-2	Windmill Repairing				
2-2-1	Transportation	-	L.S.		
2-2-2	Repairing of existing tower	-	L.S.		
2-2-3	Replace the complete windmill	-	L.S.		
2-2-4	Miscellaneous works and others	-	L.S.		
	Sub-total				--
2-3	Hand Pump				
2-3-1	Transportation	-	L.S.		
2-3-2	Complete hand pump unit	-	L.S.		
2-3-3	Install of hand pump	-	L.S.		
2-3-4	Miscellaneous works and others	-	L.S.		
	Sub-total				--

ITEM NO.	WORK DESCRIPTION	Q'TY	UNIT	UNIT PRICE	AMOUNT
3.	Construction of Water Reservoir Tank (11 M^3)				
3-1-1	Transportation	-	L.S.		
3-1-2	Basis work and leveling works	-	L.S.		
3-1-3	Furnish and install of water reservoir tank complete with necessary coating	-	L.S.		
3-1-4	Plumbing works	-	L.S.		
3-1-5	Miscellaneous works and others	-	L.S.		
	Sub-total				--
4.	Communal Water Point				
4-1	Platform around well				
4-1-1	Transportation	-	L.S.		
4-1-2	Earth work and leveling works	-	L.S.		
4-1-3	Gravel foundation works	-	M^3		
4-1-4	Concrete works (1:3:6)	-	M^3		
4-1-5	Reinforcement bar works	-	Kg		
4-1-6	Forming works	-	M^2		
4-1-7	Miscellaneous works and others	-	L.S.		
	Sub-total				--
4-2	Communal water point				
4-2-1	Transportation	1	L.S.		
4-2-2	Earth work and leveling works	1	L.S.		
4-2-3	Gravel foundation works	2.0	M^3		
4-2-4	Concrete works (1:3:6)	1.7	M^3		
4-2-5	Reinforcement bar works	100	Kg		
4-2-6	Forming works	2.0	M^2		
4-2-7	Concrete brick works	4.0	M^3		
4-2-8	Plastering works (mortar 20m/m)	25.5	M^2		
4-2-9	Furnish and install of roof	13.0	M^2		
4-2-10	Furnish and install of column	1	L.S.		
4-2-11	Plumbing works	1	L.S.		
4-2-12	Miscellaneous works and others	1	L.S.		
	Sub-total				25,000.00

ITEM NO.	WORK DESCRIPTION	Q'TY	UNIT	UNIT PRICE	AMOUNT
5.	Bathing Shed (5 Rooms)				
5-1-1	Transportation	1	L.S.		
5-1-2	Earth work and leveling works	1	L.S.		
5-1-3	Gravel foundation works	3.9	M^3		
5-1-4	Concrete works (1:3:6)	3.4	M^3		
5-1-5	Reinforcement bar works	204	Kg		
5-1-6	Forming works	5.0	M^2		
5-1-7	Concrete brick (wall) works	46.2	M^2		
5-1-8	Plastering works (mortal 20m/m)	15.6	M^2		
5-1-9	Furnish and install of roof	27.0	M^2		
5-1-10	Furnish and install of column	1	L.S.		
5-1-11	Plumbing works	1	L.S.		
5-1-12	Miscellaneous works and others	1	L.S.		
	Sub-total				20,000.00
6.	Waste Water Drainage				
6-1-1	Transportation	1	L.S.		
6-1-2	Earth work and leveling works	1	L.S.		
6-1-3	Concrete works (1:4:6)	0.5	M^3		
6-1-4	Concrete brick works	5.0	M^2		
6-1-5	Gravel works (40-60 m/m)	7.0	M^3		
6-1-6	Ceramic pipe works (Ø100 m/m)	2.0	M		
6-1-7	Miscellaneous works and others	1	L.S.		
	Sub-total				5,000.00
7.	Distribution Pipe ($L=50^m$ X 3 places)				
7-1-1	Transportation	1	L.S.		
7-1-2	Materials for distribution	1	L.S.		
7-1-3	Earth works and installation	1	L.S.		
7-1-4	Miscellaneous works and others	1	L.S.		
	Sub-total				8,000.00
Grand	Total				58,000.00

COST FOR CONNECTION WITH MAIN PIPE

Pipe	2"Ø G.I.	78 shr/m	50 m
Tees	2" X 2" G.I.	36 shr/Unit	1
Nipples	2" G.I.	18.8 shr/Unit	3
Full Way Valves	2"	150 shr/Unit	1
Reducing Socket	2" X $1\frac{1}{2}$" G.I.	20.4 shr/Unit	1
Nipples	$1\frac{1}{2}$" G.I	13.7 shr/Unit	2
Reducing Socket	$1\frac{1}{2}$"X 1 " G.I.	13.5 shr/Unit	2
Bends	1" G.I.	16.4 shr/Unit	2
Stop Cock	1"	150 shr/Unit	2
Union	2"	55 shr/Unit	1
Union	1"	20.4 shr/Unit	2
	Sub. Total :	4,645.8 shr	
Transportation	25 % of the above	1,161 shr	
Labour Charge	20 shr/m 50 m	1,000 shr	
Agency Fee	15 % of the above	1,021 shr	
	T o t a l :	7,830 shr	Say 8,000 shr

PRICE SCHEDULE FOR DEPARTMENTAL RIGS TO BE CHARGED AS FROM JANUARY, 1980 ONWARDS

ITEM	DESCRIPTION OF WORKS	UNIT	RATE FOR R/RIGS	RATE FOR P/RIGS
1.	Mobilisation and transport or whole drilling unit from .....to ..... drilling sites and back	km	76.00	15.00
2.	- Ditto- erecting and dismantling of whole drilling unit on the site	ls	11,930.00	7,500.00
3.	Dismantling, shifting and erecting of whole unit form one site to the next, if working in one area for the same project	ls	12,690.00	2,550.00
4.a	For unconsolidated rock drilling 152 mm Ø	m	270.00	334.00
	" 203 mm Ø	m	314.00	527.00
	" 254 mm Ø	m	468.00	750.00
	" 305 mm Ø	m	600.00	950.00
	" 360 mm Ø	m	1,250.00	1,250.00
4.b	For consolidated rock Drilling 152mm Ø	m	314.00	334.00
	" 203mm Ø	m	468.00	468.00
	" 254mm Ø	m	600.00	600.00
	" 305mm Ø	m	750.00	750.00
5.a	Supply and insert plain stee casing a) 152 mm Ø	m	408.00	408.00
	b) 203 mm Ø	m	480.00	480.00
	c) 254 mm Ø	m	656.00	656.00
	d) 305 mm Ø	m	800.00	800.00
6.	Supply and insert slotted casing a) 152 mm Ø	m	508.00	508.00
	b) 203 mm Ø	m	580.00	580.00
	c) 254 mm Ø	m	756.00	756.00
7.	Supply and insert Bridge slotted casing a) 152 mm Ø	m	3,400.00	3,400.00
	b) 203 mm Ø	m	4,580.00	4,580.00
	Supply and insert plain Dura pipes	m	201.00	201.00
	supply and insert slotted Dura pipes (screen) d) 152 mm Ø	m	3,400.00	3,400.00
	e) 203 mm Ø	m	4,250.00	4,250.00

ITEM	DESCRIPTION	UNIT	RATE FOR R/RIG	RATE FOR P/RIG
8.	Supply and insert Johnsons screen			
	a) 152 mm	m	3,400.00	3,400.00
	b) 203 mm	m	4,250.00	4,250.00
9.	Only inserting casing	m	150.00	150.00
10.	Supply and insert gravel pack	m^3	1,000.00	1,000.00
11.	Supply and cementation work	m^3	700.00	700.00
12.	Developing work including inserting and removal of development equipment	Hr	317.00	317.00
13.	Installation and removal of test pump equipment	Hr	317.00	317.00
14.	Test pumping	Hr	317.00	317.00
15.	Preparation of well head with well cap, serial No. and cement plate 1.0 x 1.0 x 0.5 m^3 around well head	1s	1,000.00	1,000.00
16.	Supply water for drilling operations and field camp	1s	2,000.00	2,000.00
17.	Reaming hole form			
	154 mm to 219 m	m	150.00	N/A
	219 m to 311 m	m	252.00	N/A
	311 m to 381 m	m	37,377.00	N/A
18.	Cementation work slotted casing 203 mm Ø	Hrs.	317.00	317.00
19.	Water casing pipes steel size 6"			
	Casing 6m (long) with collars 6"	m	462.00	462.00
	Casing reduced 8" to 6"	m	742.50	742.50
	Shutter screens size 6"	No.	3,630.00	3,630.00
	with collars	m	1,089.00	1,089.00
	Shutter screens standard size 8"	m	1,419.00	1,419.00
20.	cleaning	Hr	317.00	317.00
21.	Removal of casing	Hr	317.00	317.00
22.	Waiting time	Hr	317.00	317.00
23.	Formation of sampling	No.	50.00	50.00
24.	Water sampling	No.	100.00	100.00
25.	Extracting of casing	Hr	317.00	317.00
26.	Other works (specify)			

Date: 4th February, 1983.

Your Ref.

Our Ref. ME/JICA/03/83.

M/s. Japan International CO-operation Agency,
(J.I.C.A).

Dear Sirs,

RE: REPAIRING AND PLASTERING OF SHALLOW WELL.

This is in reference to our survey of Well Number one after Ramisi sugar Factory where we discovered that your Well is 7ft. deep with a diameter of 11ft.

We shall do the Plastering of the Well covering the 11ft. diameter of it with cement and sand.

To complete the whole job to your satisfaction Labour, Material and Transportation inclusive will be Kshs. 4,500.00.

QUOTATION FOR THE HAND FORCE PUMP.

The cost for installing a hand force pump on the above Well with complete necessary fittings, pipes, Rods. Cylinder Pump Transportation and Labour will be Kshs. 8,200.00

QUOTATION FOR WATER RESERVOIR TANK.

To construct a concret cement tank for 12,000 litres Material to be used will be coral block, Steel, Blast sand and cement.

The storage tank will be the same as the enclosed photo this tank will be supplied together with fitting of 1 inch, outlet pipe and 4 gate valves.

The roof of the Tank will be covered with G.I.C Sheets Galvanised.

To complete the whole work as per our above specifications will be Kshs. 29,350.00.

Note that the above quotation implies only on our own plan of Construction and should therebe any alterations on it then the quotation will be liable for a change.

Yours faithfully,

Date: 7th February, 1983.

Your Ref.....

Our Ref. ME/JIC/03/83.

M/s. Japan International Co-operation (Agency)

Dear Sirs,

QUOTATION FOR DIGGING SHALLOW WELL.

With reference to the above we have to inform you that it will cost you Kshs. 1000.00 per metre depth with a diameter of 2½ metres. The surrounding diameter of the Well will be done by Coral block(Calbat) Cement work and Plastering. The top of the Well will also be covered.

The above quotation price includes Transport, Material and Miscellaneous.

Note that the place for the Well to be dug will be duly authorised by yourselves.

Yours faithfully,

Date: 4th February, 1983.

Your Ref. .....

Our Ref. ME/JICA/02/83.

M/s. Japan International Co-operation Agency,
(J.I.C.A).

Dear Sirs,

QUOTATION FOR WINDMILL.

With reference to our survey on your site on well No. I after the Ramisi Sugar Factory we append below the specifications and quotation for the type of the Windmill that would be suitable for it.

I. SPECIFICATION OF THE WINDMILL.

(a) Rotor size I2ft Galvanised and mild steel
(b) Tower size 25ft high from ground level
(c) Gear Reduction type
(d) Strong Concrete foundation for the Tower
(e) Suction Pipe 2½" diameter
(f) One Cylinder Pump and all necessary fittings
(g) One outlet Pipe to the reservoir tank 20ft.
(h) Structure work mild steel Angle line.

We paint our Windmill with special corrosion proof paint undercoat and the finishing coat of Con Blue Robbialac.

I. The complete Windmill Unit will be	Kshs.	34,500.00
2. Transportation of the Windmill.....	Kshs.	I,250.00
3. Installation charges.....	Kshs.	2,950.00
4. I5% Government Sale Tax.....	Kshs.	5,805.00
Nett amount.....	Kshs.	44,505.00

Yours faithfully,

Your Ref.....

Date: 4th February, 1983.

Our Ref. ME/JICA/OI/83.

M/s. Japan International Co-operation Agency,
(J.I.C.A).

Dear Sirs,

RE: QUOTATION FOR THE REPAIR OF A WINDMILL ON WELL NO. 2 BEFORE RAMISI SUGAR FACTORY FROM MOMBASA.

With reference to our visit on your above mentioned Well we have to inform you that the whole of your Windmill Unit needs to be replaced.

The following will be supplied by ourselves:-

(a) One New Rotor I2ft.

(b) Reduction Gear Box

(c) Tail

(d) Brake System

(e) Suction Pipe and Outlet Pipe

(f) One Cylinder Pump

(g) Complete Painting of the Windmill.

We have to guarantee that the Windmill will be in full operation after all the above mentioned necessisties will have been applied (fulfiled).

The complete Windmill Unit, Transportation, Labour and Material inclusive will be Kshs. 33,350.00.

The hand force pump to be installed on the same well Labour, Material, Transport will be Kshs. 8,200.00.

Yours faithfully,

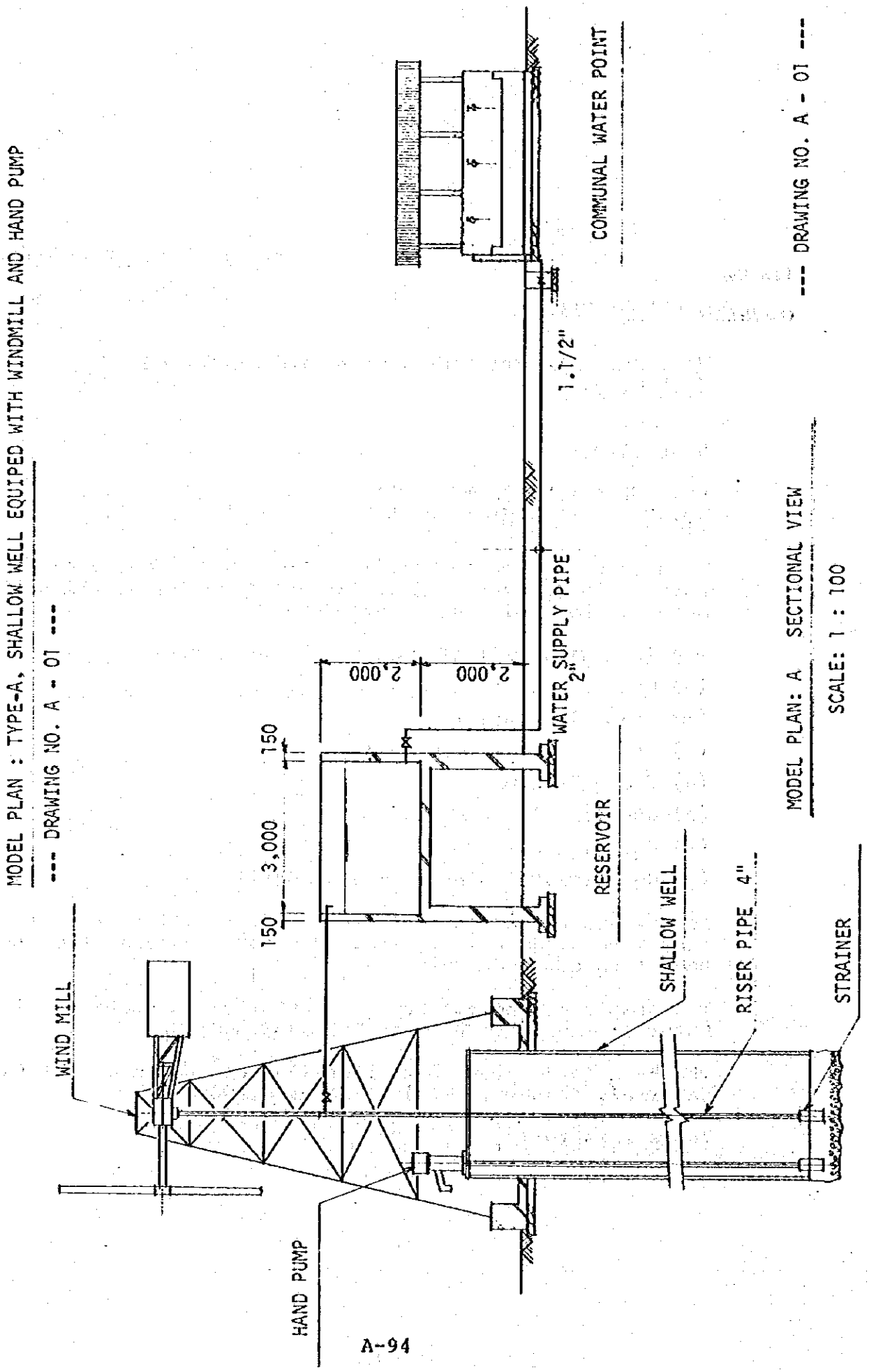
MODEL PLAN : TYPE-A, SHALLOW WELL EQUIPED WITH WINDMILL AND HAND PUMP
--- DRAWING NO. A - 01 ---
COMMUNAL WATER POINT
--- DRAWING NO. A - 01 ---
1.1/2"
WATER SUPPLY PIPE 2"
2,000
2,000
150
3,000
150
RESERVOIR
MODEL PLAN: A SECTIONAL VIEW
SCALE: 1 : 100
WIND MILL
SHALLOW WELL
RISER PIPE 4"
STRAINER
HAND PUMP

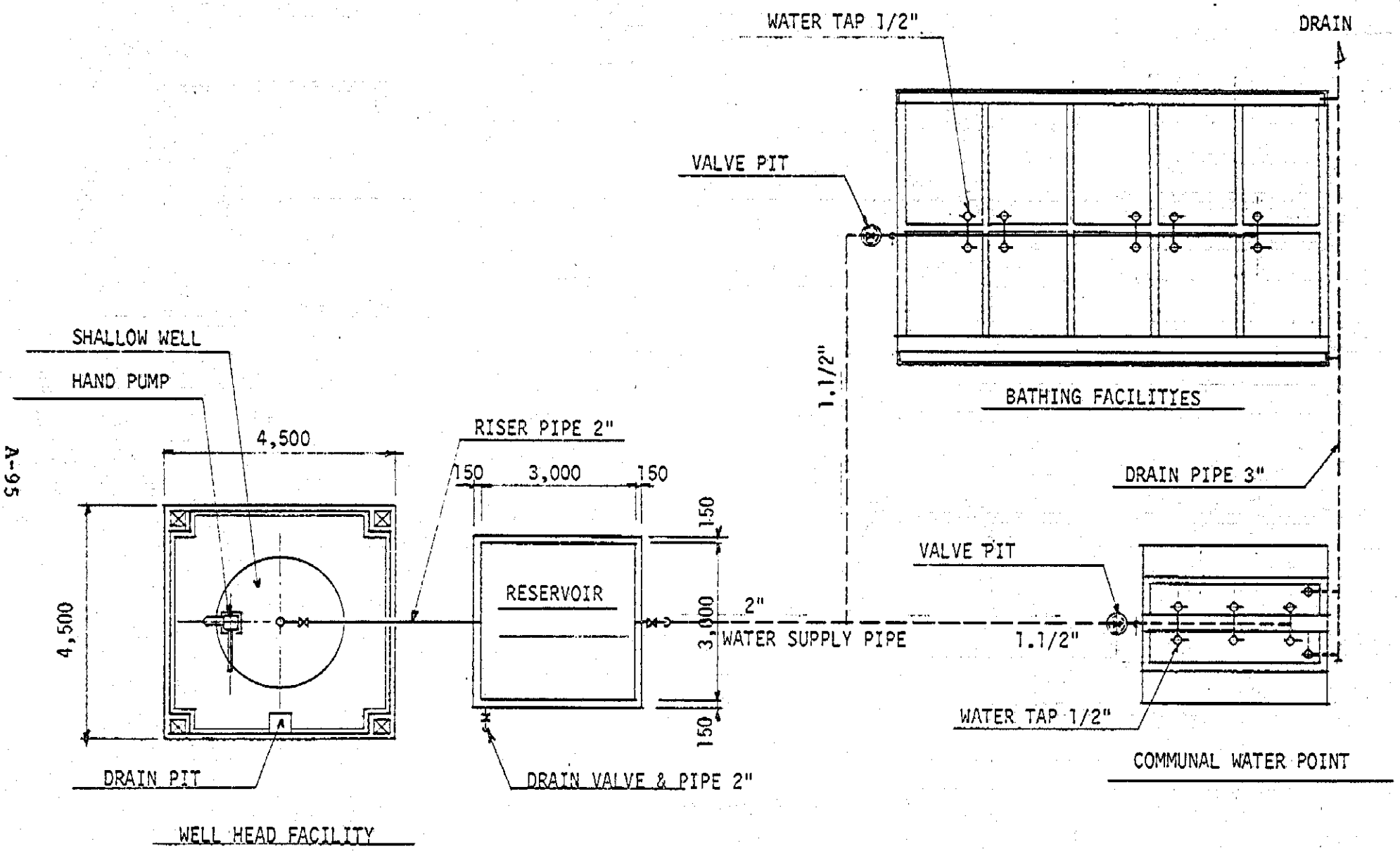

MODEL PLAN: TYPE A-1 FACILITY LAYOUT PLAN --- DRAWING NO. A - 02 ---

SCALE: 1 : 100

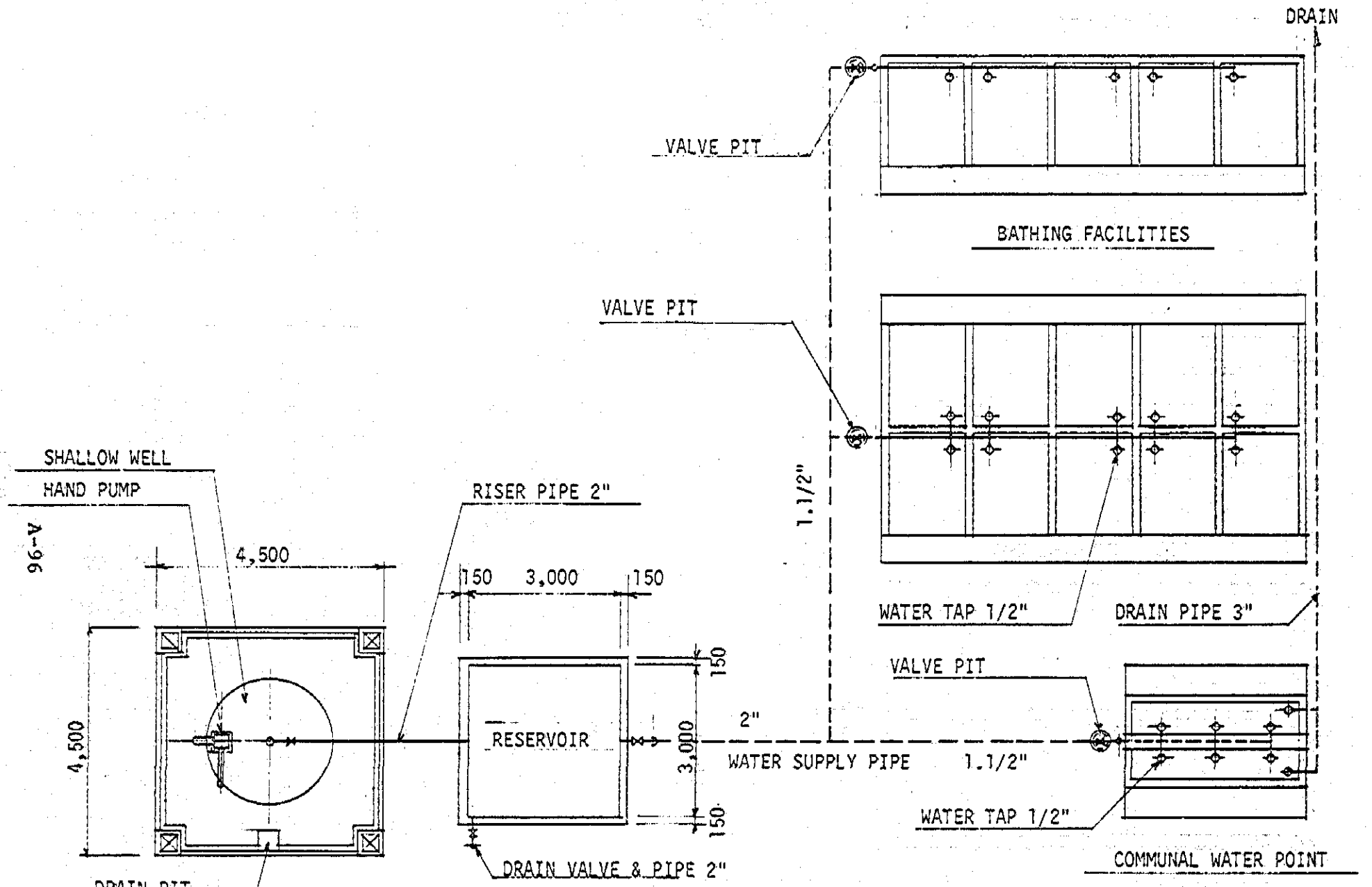

MODEL PLAN: TYPE A-2 FACILITY LAYOUT PLAN

SCALE: 1 : 100

--- DRAWING NO. A - 03 ---

MODEL PLAN: A COMMUNAL WATER POINT

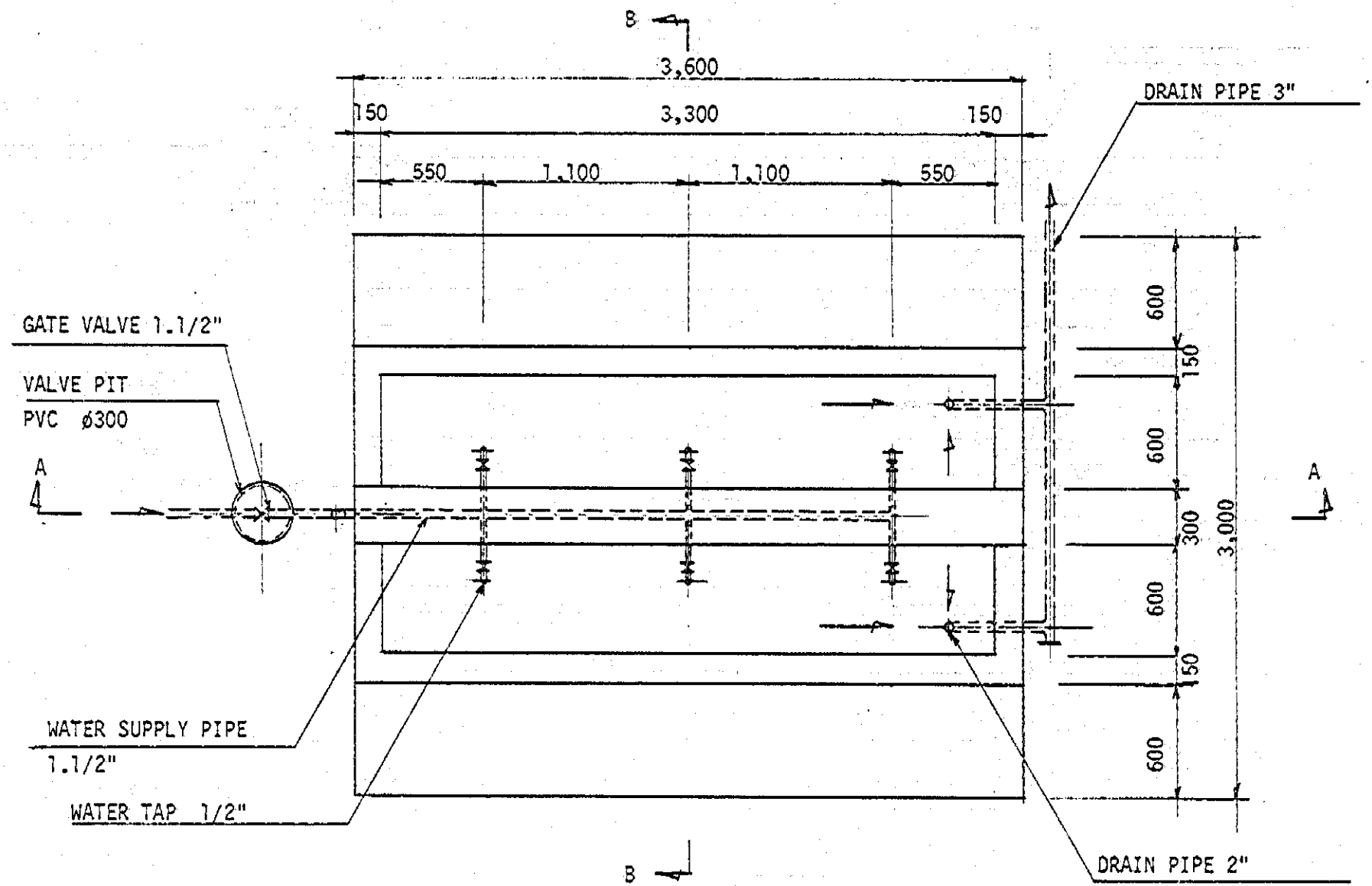

LAYOUT PLAN SCALE: 1 : 30

--- DRAWING NO. A - 04 ---

MODEL PLAN: A COMMUNAL WATER POINT

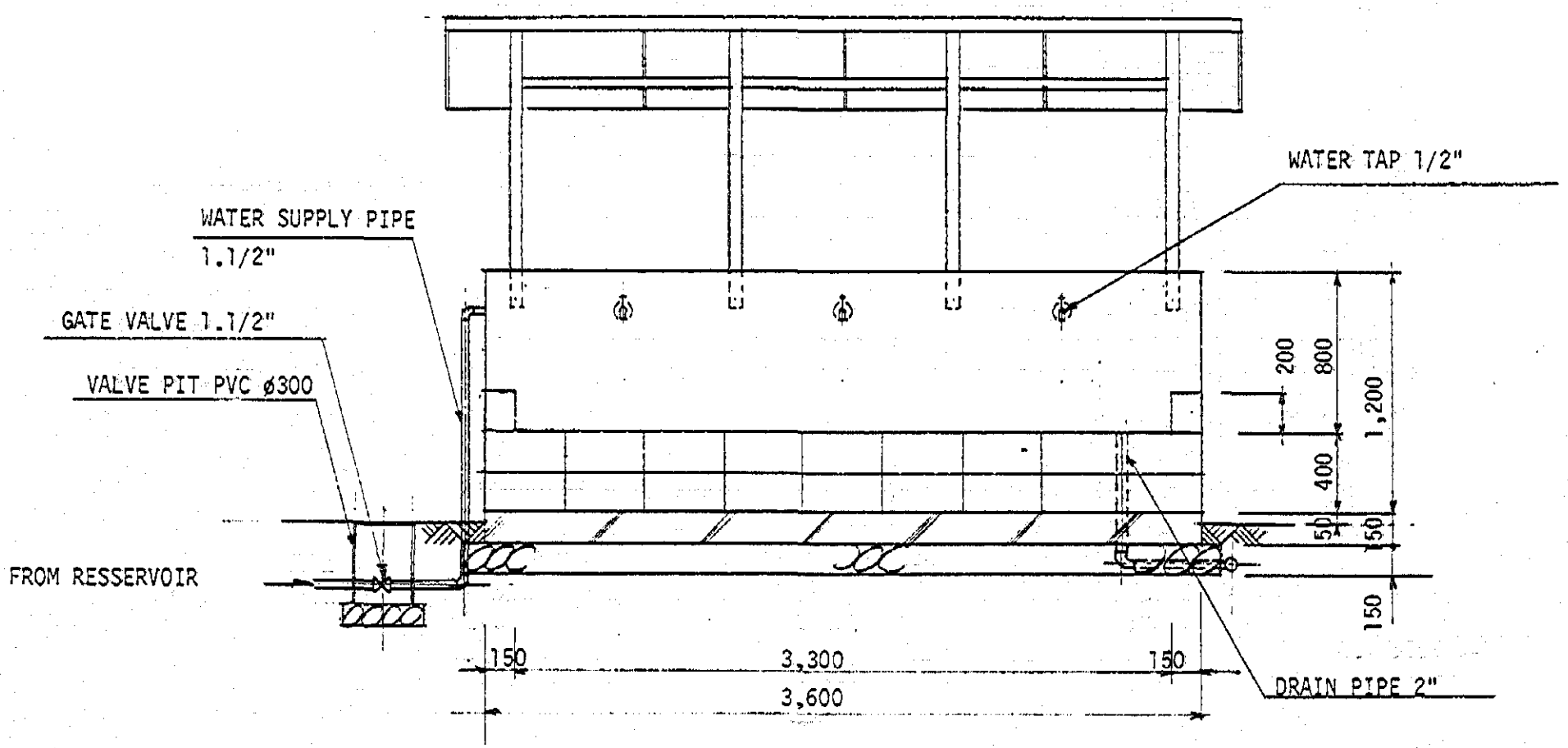

SECTION A - A SCALE: 1 : 30

--- DRAWING NO. A - 05 ---

MODEL PLAN: A COMMUNAL WATER POINT

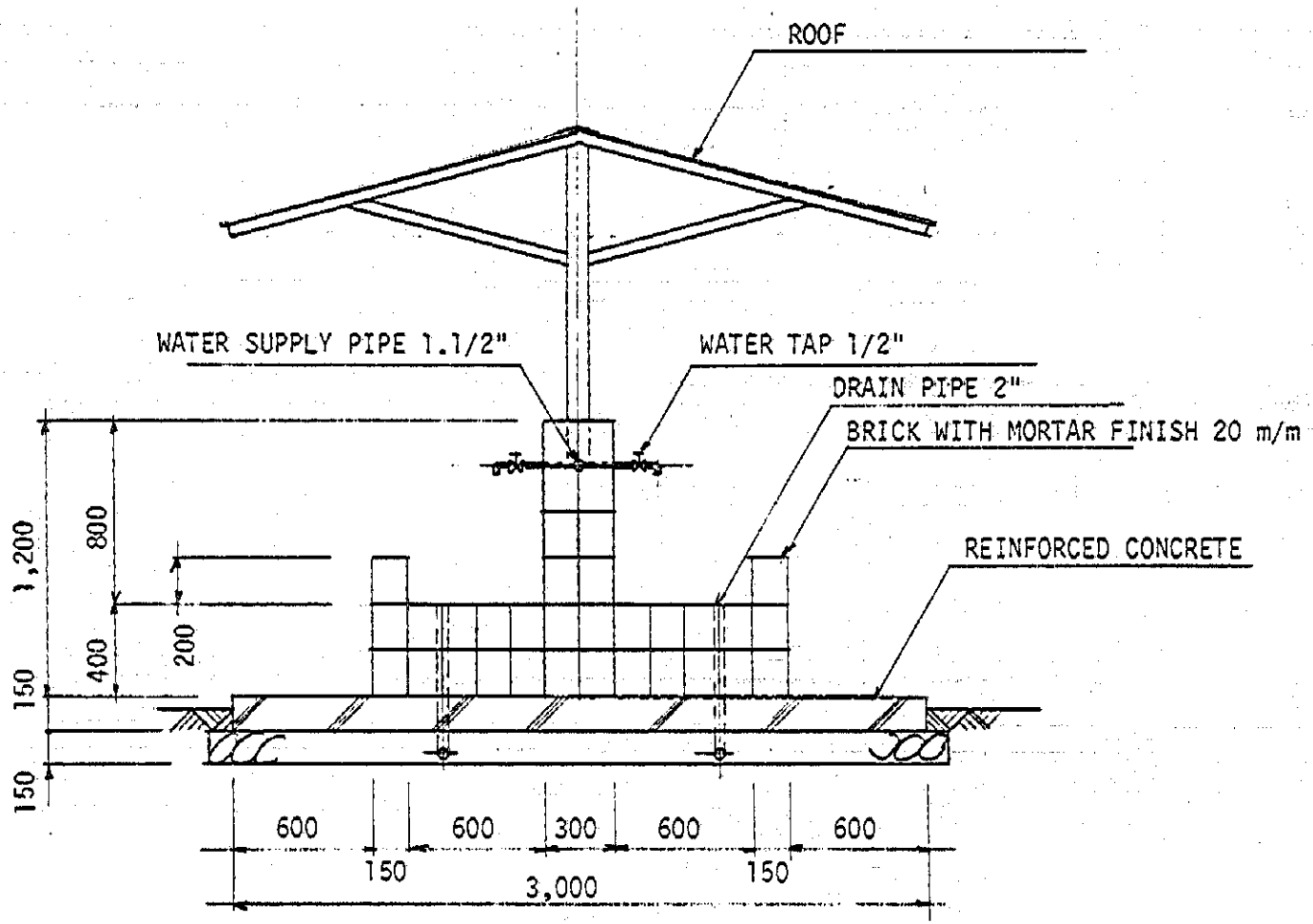

SECTION B - B SCALE: 1 : 30

--- DRAWING NO. A - 06 ---

MODEL PLAN: A BATHING FACILITIES

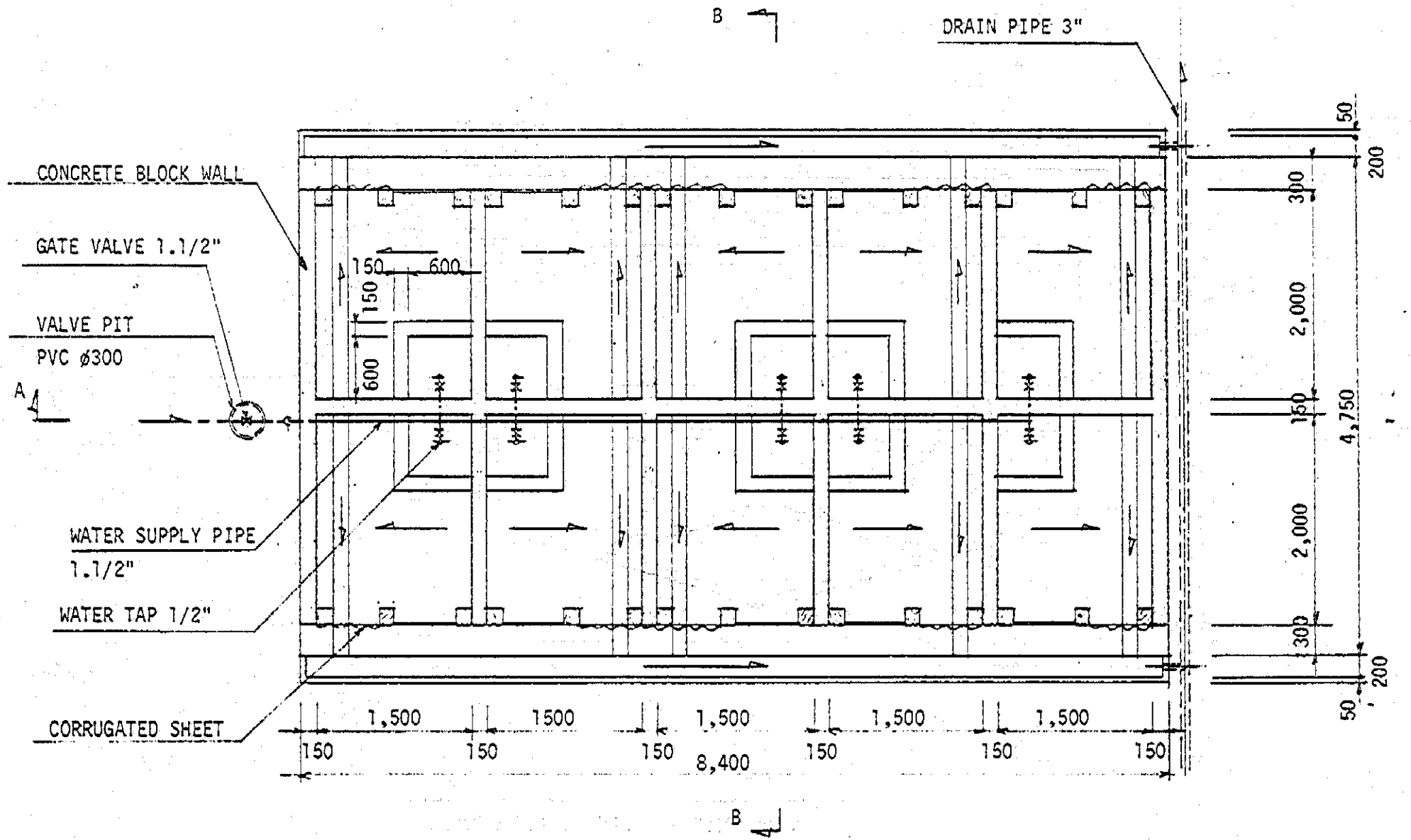

LAYOUT PLAN SCALE: 1 : 50

--- DRAWING NO. A - 07 ---

A-100

MODEL PLAN: A BATHING FACILITIES

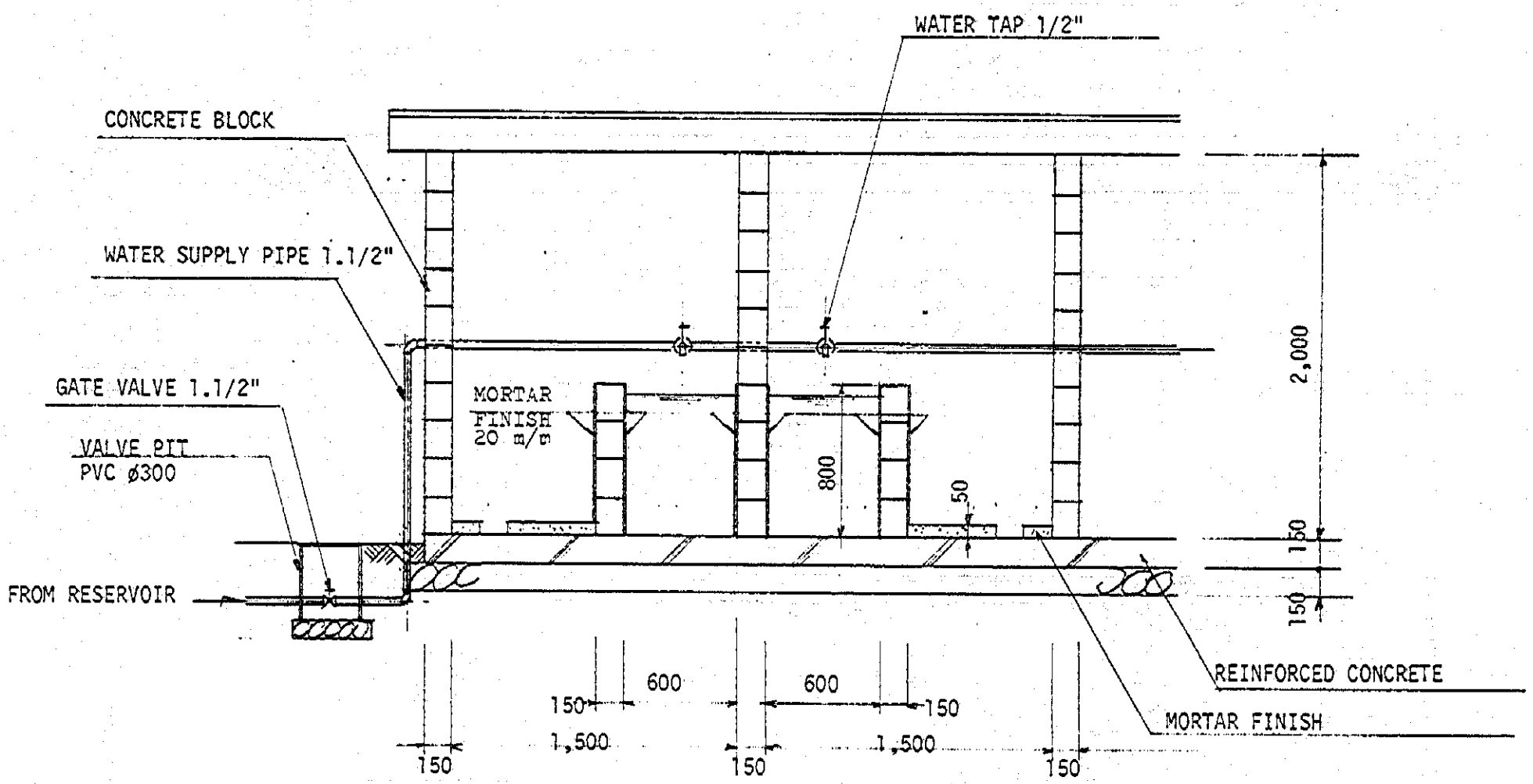

SECTION A - A SCALE: 1 : 30

--- DRAWING NO. A - 08 ---

MODEL PLAN: A BATHING FACILITIES

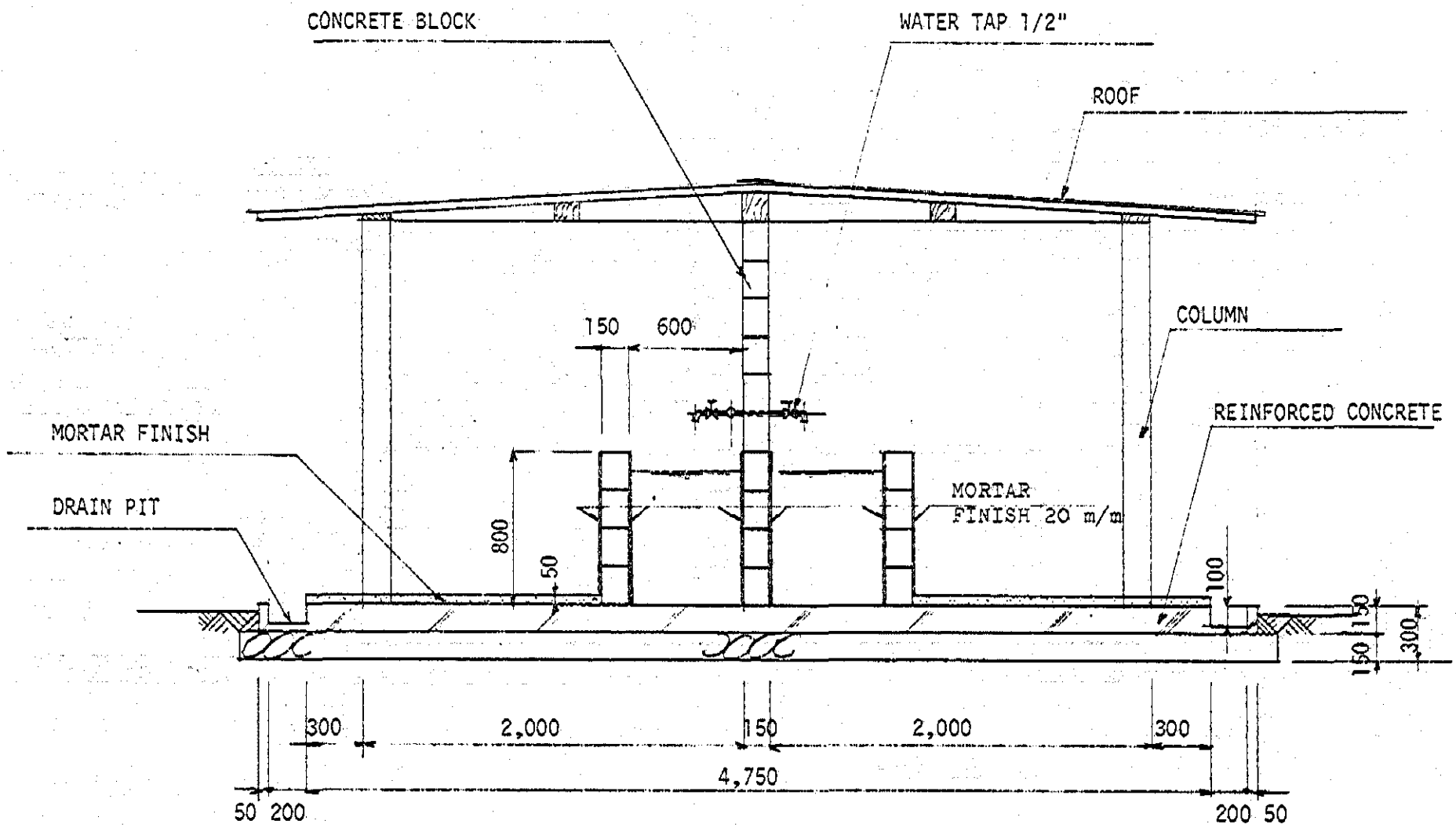

SECTION B - B SCALE: 1 : 30

--- DRAWING NO. A - 09 ---

MODEL PLAN: TYPE-B SHALLOW WELL EQUIPED WITH HAND PUMP

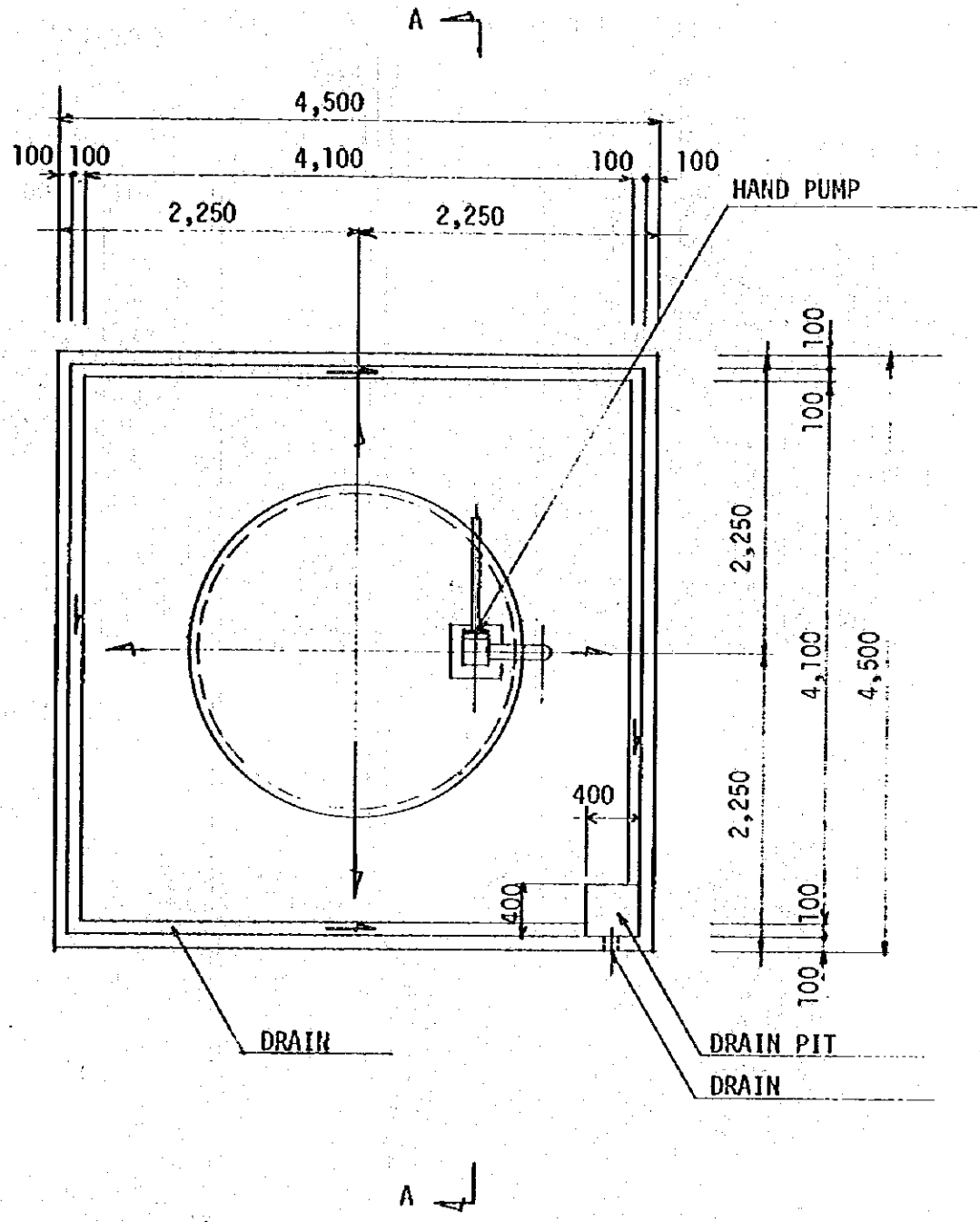

MODEL PLAN: B WELL HEAD LAYOUT PLAN --- DRAWING NO.B - 10

SCALE: 1 : 50

MODEL PLAN: TYPE-B,

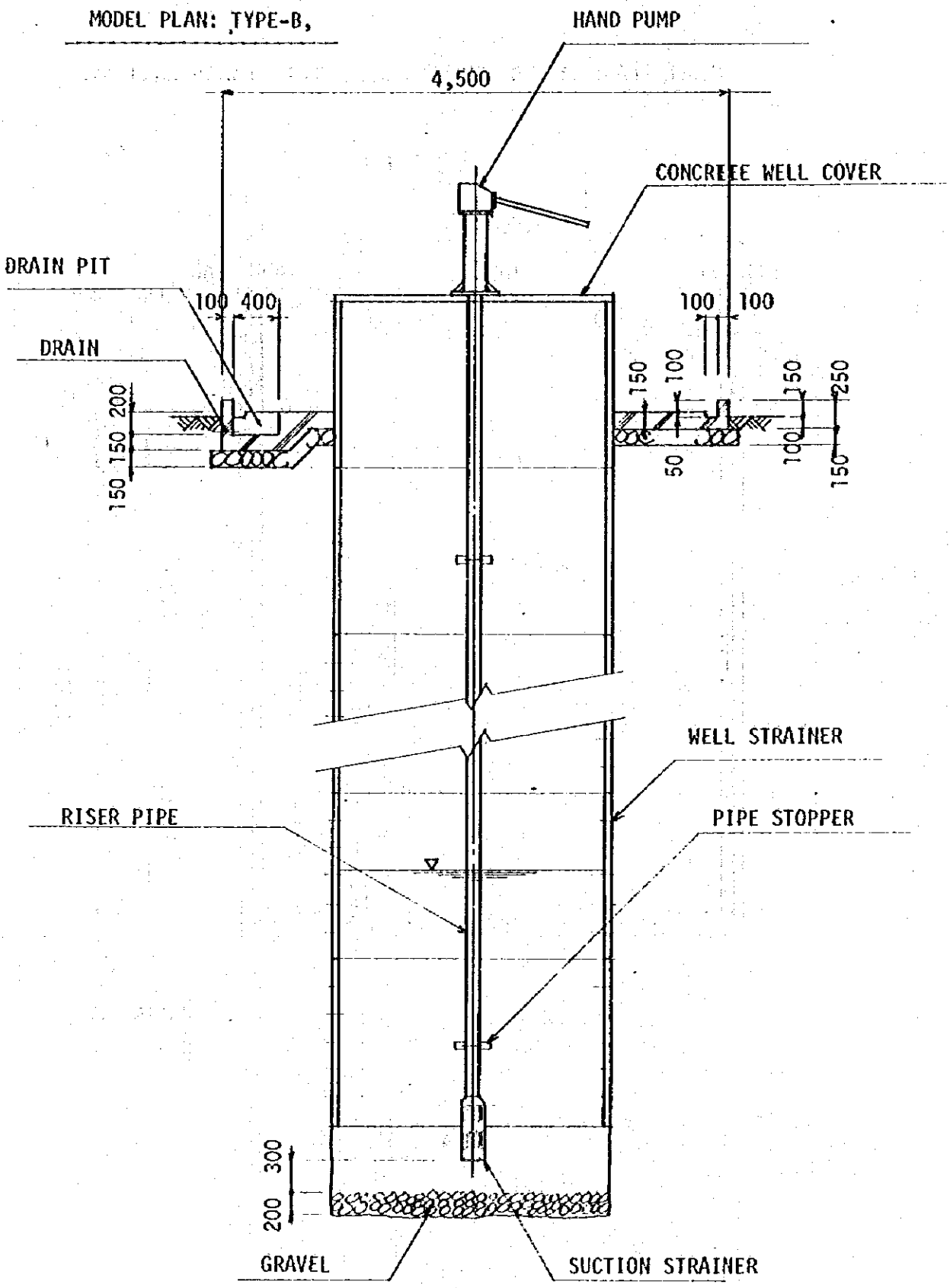

MODEL PLAN: B SHALL WELL SECTIONAL VIEW --- DRAWING NO.B - 11 ---

SCALE: 1 : 50