パキスタン中央電気通信研究所
実施協議チーム報告書

昭和54年８月

国際協力事業団

はじめに

パキスタン政府は，第4次5ケ年計画（１９７１～１９７５）の一環として電気通信分野の開発と拡充を積極的に推進すべく，わが国が昭和３８年１１月以来日本・パキスタン両国間センター協定のもとに協力してきた電気通信研究センター（ＴＲＣ）の整備拡充を立案し，新たに中央電気通信研究所（ＣＴＲＬ）の設置に対する協力をわが国に要請してきた。

日本国政府は上記要請に基づき国際協力事業団を通じ，昭和４８年１２月事前調査団を，昭和５０年1月計画打合せチームを派遣した。

これら調査団の報告に基づき，日本国政府は，本プロジェクトに対し無償資金協力及び技術協力の両面での総合的な協力を行うことが妥当であると判断した。

無償資金協力に関し，昭和５１年７月実施設計調査団，同年１１月建築確認調査団及び昭和５２年１０月研究用機材確認調査団を派遣しその結果，建物の建設及び研究用機材の供与を実施することとなり昭和５４年3月末をもって完了した。一方，本プロジェクトに係る技術協力センター方式による協力実施に際して，当事業団は昭和５３年１２月短期専門家チームを派遣し事前調整を行い，今般，センター協力実施に必要な諸事項を，パキスタン政府関係当局と協議するため実施協議チームを派遣することとなった。

当事業団は，郵政省電波監理局電波監視官友澤宙三氏を団長とする５名の実施協議チームを昭和54年3月９日から２０日間現地に派遣した。実施協議チームは，本プロジェクトに対する技術協力に係る具体的諸事項につき，パキスタン政府関係当局者と討議し，討議議事録を作成の上，それに署名した。

本報告書は，同協議チームの現地における討議議事録に係る接衝経緯，合意内容および協力計画を中心にまとめたものである。

最後に，本プロジェクトに対する技術協力が実現することを至上の喜びとするとともに，友澤団長はじめ団員諸氏のご協力ならびに外務省，郵政省，在パキスタン日本国大使館及び派遣専門家の方々に対して，深甚の謝意を表したい。

昭和５４年 4 月

国際協力事業団
社会開発協力部長
廣　田　孝　夫

Islamabad

GUIDE MAP

CAPITAL DEVELOPMENT AUTHORITY
ISLAMABAD

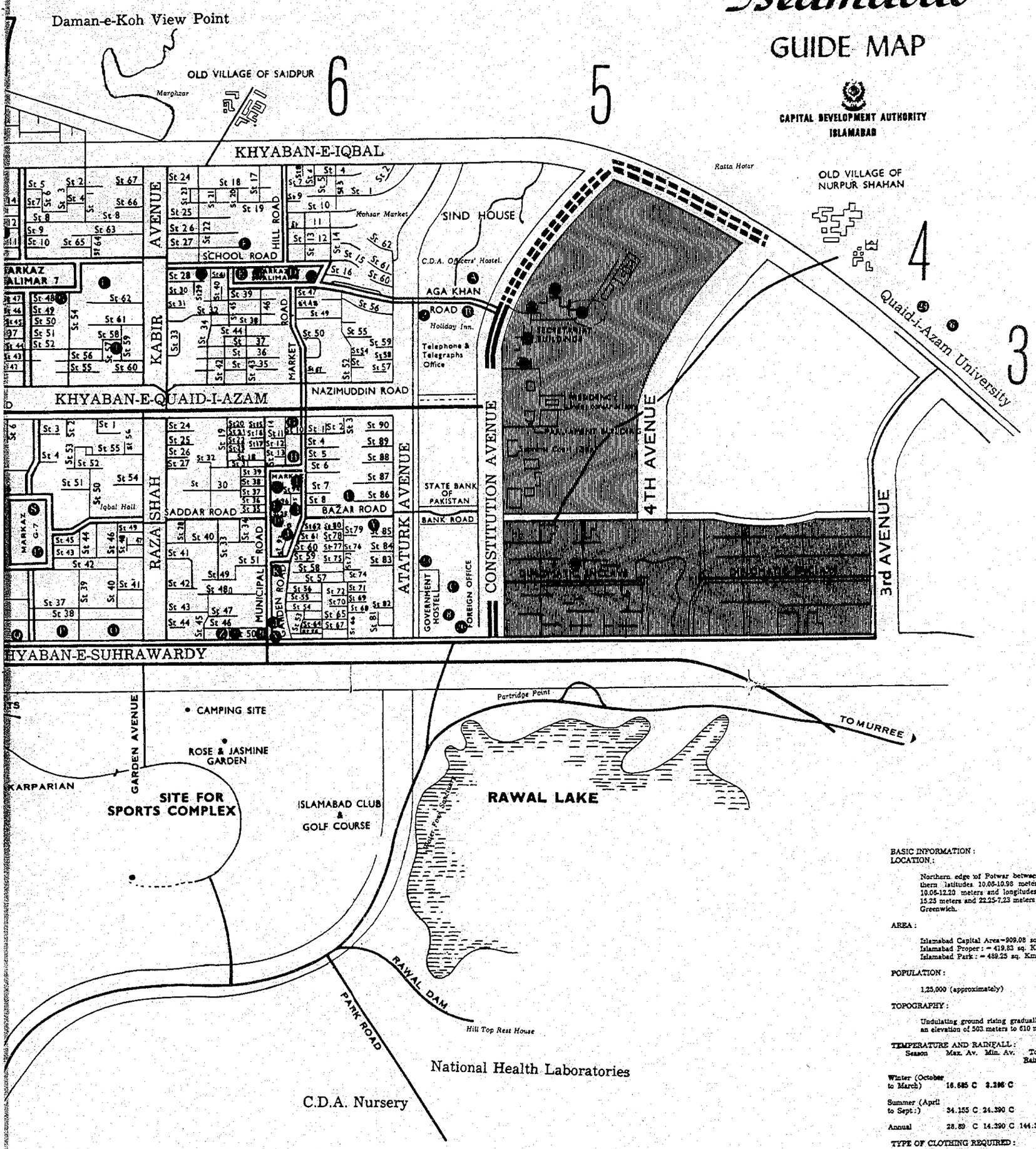

BASIC INFORMATION :

LOCATION :

Northern edge of Potwar between Northern latitudes 10.08-10.98 meters and 10.08-12.20 meters and longitudes 21.95-15.23 meters and 22.25-7.23 meters east of Greenwich.

AREA :

Islamabad Capital Area=909.08 sq. Kms.
Islamabad Proper : = 419.83 sq. Kms.
Islamabad Park : = 489.25 sq. Kms.

POPULATION :

1,25,000 (approximately)

TOPOGRAPHY :

Undulating ground rising gradually from an elevation of 503 meters to 610 meters.

TEMPERATURE AND RAINFALL :

Season	Max. Av.	Min. Av.	Total Rainfall
Winter (October to March)	16.685 C	3.296 C	
Summer (April to Sept.:)	34.155 C	24.390 C	
Annual	28.89 C	14.390 C	144.30 c.m.

TYPE OF CLOTHING REQUIRED :

Heavy in winter and Tropical in summer.

RECREATION :

Clubs: Islamabad Club (Tel : 22651)
Cinema: Melody Cinema, Markaz G-6

HEALTH :

(i) Central Government Polyclinic G-6 (Tel : 25811)

(ii) C.D.A. Medical Centre G-6 (Tel : 22955).

(iii) C.D.A. Medical Centre G-7 (Tel : 22338).

(iv) C.D.A. Medical Centre F-7 (Tel : 21249).

(v) National Health Laboratories (Islamabad Park) (Tel : 20797)

SHOPPING CENTRES :

Aabpara Market, G-6.
Covered Bazar, G-6.
Markaz, G-6.
Kohsar Market, F-6.
Super Market, Markaz, F-6.
Markaz, F-7.
Sitara Market, Markaz, G-7.

A Frontier House, Baluchistan House (under construction) F-5
B T.V. Complex (under construction) F-5
C National Broadcasting House, G-5
D Tourist Information Centre, F-6
E Islamabad Centre, F-6
F Islamabad College for Girls, F-6
G Central Government Polyclinic, G-6
H Argentina Park, G-6
I General Post Office and Police Station, G-6
J Cinema, G-6
K Jamia Masjid, G-6
L Covered Bazar, G-6
M Aab Para Community Centre, G-6
N Bus and Taxi Stand, G-6
O C.D.A. Main Office, G-7
P Printing Corporation of Pakistan Press, G-7
Q Fire Brigade Headquarters, G-7
R Pakistan Manpower Institute, G-7
S Sitara Market, G-7
T National Institute of Folk and Traditional Heritage Museum, F-7
U Government College for Men, F-7
V Art Gallery, F-7
W Government College for Women, F-7
X Telephone and Telegraph Directorate, G-8
Y M/s Saleemsons Packers, G-6
Z Waljis Travels Ltd, G-6

Processed, Printed Khursheed Printers Limited, Islamabad

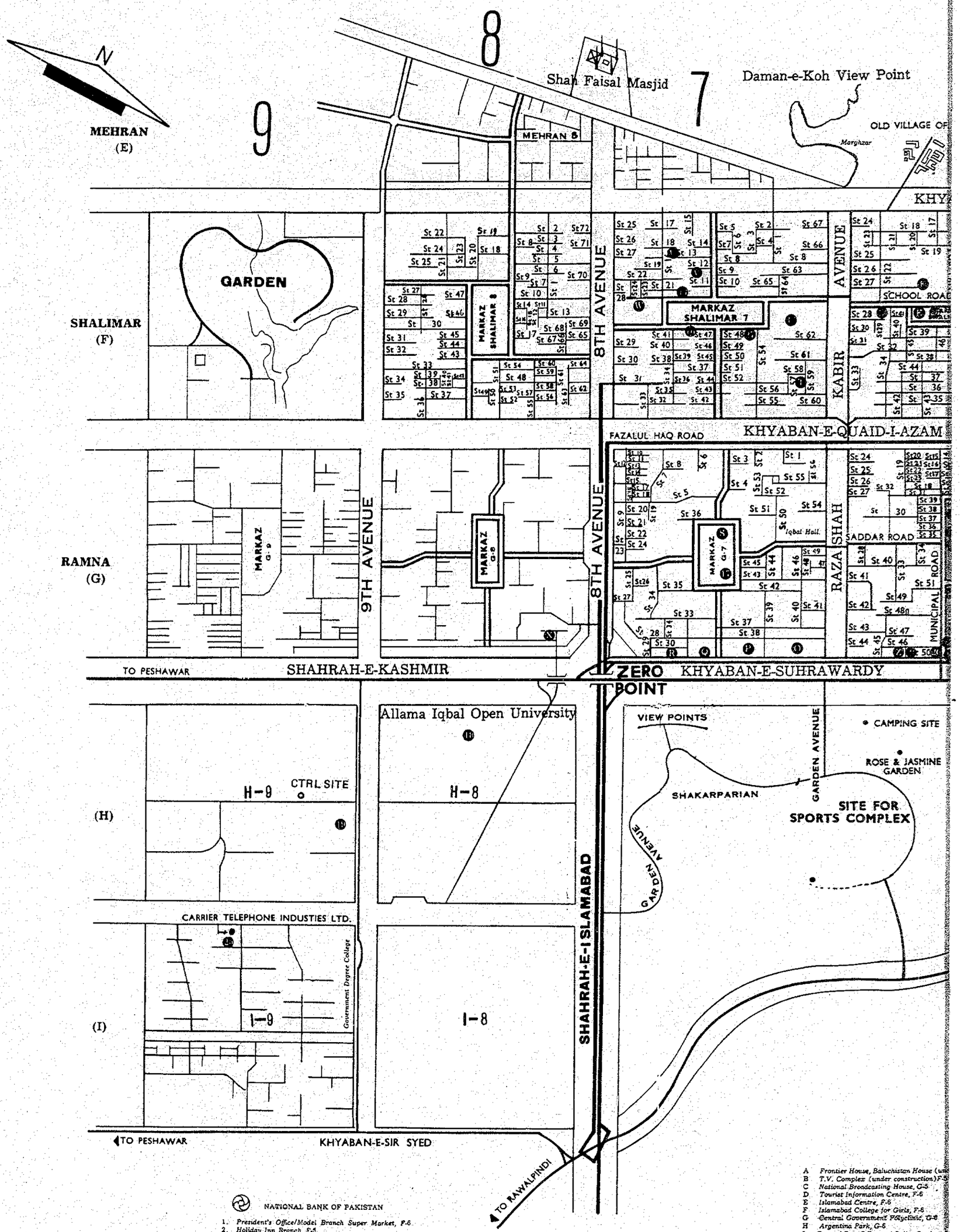

NATIONAL BANK OF PAKISTAN

1. President's Office/Model Branch Super Market, F-6
2. Holiday Inn Branch, F-5
3. Secretariat Block 'B' Branch, F-5
4. Secretariat Block 'D' Branch, F-5
5. Secretariat Block 'S' Branch, F-5
6. Quaid-i-Azam University Branch, F-3
7. Diplomatic Enclave Branch, G-5
8. Foreign Office Branch, G-5
9. Aab Para Branch, G-6
10. Naval Headquarters Branch, G-6
11. Zonal Office/Main Branch, G-6
12. Exchange Counter, Islamabad Hotel, G-6
13. Office of the Supervised Credit for Technology Programme, F-6
14. P.A.E.C. Branch, F-7
15. Staff College, F-7
16. A.R.C. Branch, F-7
17. Sitara Market Branch, G-7
18. A.I. Open University Branch, H-8
19. Industrial Area Branch, H-9

HABIB BANK LTD.

20. Aab Para Branch, G-6
21. C.D.A. Civic Centre Branch, G-6
22. Secretariat 'A' Block Branch, F-5
23. U.N. Building Branch, G-5
24. University Branch, F-3
25. Industrial Area Branch, I-9
26. Foreign Affairs Branch, G-5
27. Commercial Area Branch, F-7
28. Super Market Branch and Area Office Islamabad, F-6
29. 'Q' Block Secretariat Branch, F-5

A Frontier House, Baluchistan House (un
B T.V. Complex (under construction) F-5
C National Broadcasting House, G-5
D Tourist Information Centre, F-6
E Islamabad Centre, F-6
F Islamabad College for Girls, F-6
G Central Government Polyclinic, G-6
H Argentina Park, G-6
I General Post Office and Police Station, G
J Cinema, G-6
K Jamia Masjid, G-6
L Covered Bazar, G-6
M Aab Para Community Centre, G-6
N Bus and Taxi Stand, G-6
O C.D.A. Main Office, G-7
P Printing Corporation of Pakistan Press
Q Fire Brigade Headquarters, G-7
R Pakistan Manpower Institute, G-7
S Sitara Market, G-7
T National Institute of Folk and Tradition Museum, F-7
U Government College for Men, F-7
V Art Gallery, F-7
W Government College for Women, F-7
X Telephone and Telegraph Directorate, G
Y M/s Saleemsons Packers, G-6
Z Waljis Travels Ltd, G-6

パキスタン運輸通信省表敬
中央　次官Mr.Shahqaat Ahmad
左側　小島一等書記官
　　ハッサン所長代行

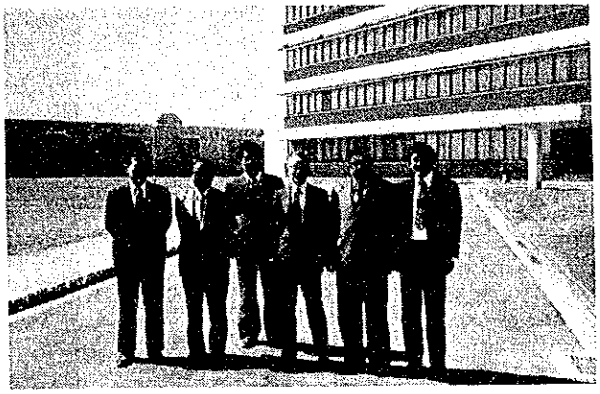

中央電気通信研究所正面にて
左から飯田団員，今西団員，中島団員，
友澤団長，ハッサン所長代行，川上団員

パキスタン電信電話総局関係者との会議

討議議事録の署名
左側，友澤団長，Mr.Naqvi 開発担当技師長
右側，Mr.Siddiqi 電信電話総局総裁
Mr.Masan CTRL所長代行

左側より
友澤団長，
Mr.Naqvi 開発担当技師長

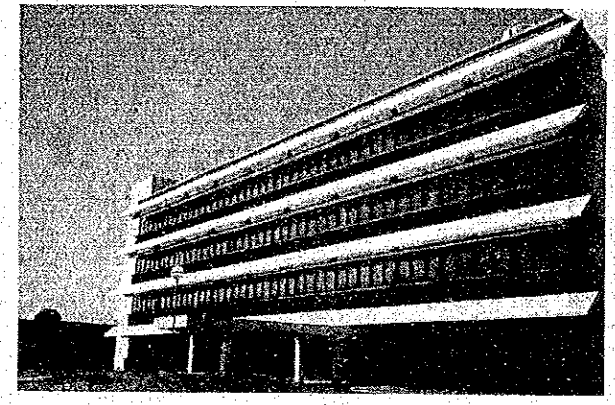

中央電気通信研究所正面

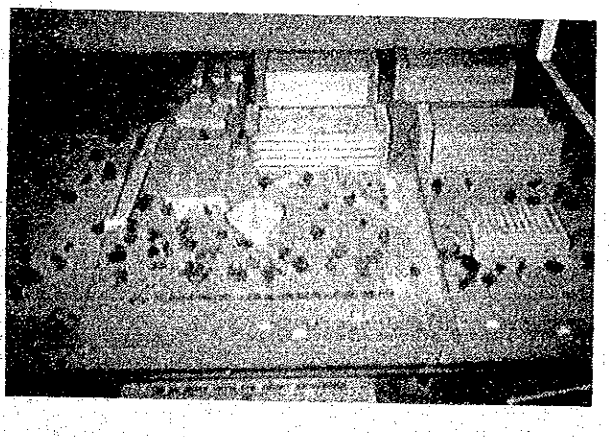

将来の中央電気通信研究所全体構想(案)

目　　次

I　序　　論

I－1　実施協議チーム派遣の経緯と目的

パキスタン政府は，自国の必要に合致する通信機器の研究開発の必要性を認め，昭和３８年１１月，日本・パキスタン両国間でセンター協定を締結し，ハリプールに電気通信研究センターを設立した。本センターは昭和３９年７月研究活動が開始されて以来，パキスタンにおける唯一の総合電気通信研究センターとして同国の電気通信分野の研究開発に取組んできた。しかし，創立以来１０数年を経過した現在，電気通信技術の発展は目ざましく，研究分野も増加しており，これらの新技術に対応すべく基礎的な研究機材を導入して研究部門を拡充する事が必要になり，パキスタン政府は第４次５カ年計画（１９７１～１９７５）の一環として同センターの整備拡充を取り上げ，新たに首都イスラマバッドに中央電気通信研究所の設置を計画し，わが国にその協力を要請してきた。

本要請を受けたわが国は，昭和４７年３月（第１次）事前調査団を派遣，以後数次にわたり調査団を現地に派遣した。これらの調査結果にもとづき，わが国の協力は建物の建設及び研究用機材供与の無償資金協力から実施にうつされた。本件プロジェクトは技術協力含みの案件であったため，この間，数多くの問題点の調査検討が行われ，新研究所発足のための計画整理が行われてきたが，最大の問題点は国産化である。外貨の乏しいパキスタン国としては，多額の外貨を使用している電気通信の分野において，その機器を国産化し，少しでも外貨の節約をはかる必要があった。このために，本研究所における研究も「国産化に結びつくような研究」を熱望してきた。しかしながら，現実には電源とか電話機の製作など限られた機種以外に工場的生産手段を持たないパキスタン国においては，マイクロ波機器や電子交換機のような高度の技術を要する通信機器を国産化することは当面不可能であり，むしろこれら技術知識の修得，蓄積が先決であるとのわが国のプロジェクトに対するの技術協力方針を固め昭和５３年１２月に技術協力センター方式の範囲，問題点などについて再確認すべく短期専門家チームを派遣し，研究項目の整理，専門家の派遣，研究員の受入れ及び機材供与等に関するセンター協力全体構想について一応の輪郭を得た。

以上の経緯をふまえ，本センター協力実施に係る具体的諸事項につき，パキスタン政府関係当局と討議し，討議議事録（R／D）を作成の上，それに署名することを目的に「実施協議チーム」を派遣することになった。

I－2　中央電気通信研究所設置の意義

さきに「経緯」でも述べたとおり，パキスタン国には既にＴＲＣが設置されているが，その研究実績または研究手法をめぐって，意見，見解が多様であったため，ＴＲＣをＣＴＲＬで置き替える意義については，「より大規模のもの」ということ以外には，必ずしも明確ではなかった。

加えて，専門家の派遣，研究員の受入れなどの業務について，パ国側の期待度が大きいわりあ

いには，その内容が判断とせず，この対応に苦慮している情況であった。

パ側のＣＴＲＬ設置計画は，「機器を製造する」ことであり，現在輸入している各種の通信用機器を国産化し，外貨の節約に寄与しようとするものであった。

これに対する日本側見解は，通信機器の国産化の「方向」は理解できるとしながらも，マイクロ波機器などを含む高度のプロジェクト数十項目につき，一律に「Development」を期待することは現実的でなく，相当のプロジェクトについては「技術の蓄積」が先行すべきであるとした。

また，国産化には，製造のための工場と，採算のとれる程度の需要があることなど，別な角度からの環境条件も成熟していないとの見解も出された。さらに製造に重点をおいた技術指導となると，派遣専門家は「ノーハウ」を持つ，メーカーの技術者に依存せざるを得なくなり，その確保は現時点では可成り困難であるとの日本側での国内事情があった。

これら背景をもとに技術協力センター方式にて技術協力を実施するに際し，５３年１２月短期専門家チーム，及び今回の実施協議チームの２回の調査団を派遣し，パキスタン電信電話総局の責任者との協議を通じて，ＣＴＲＬの位置づけを次のようなものとした。

1. ＴＲＣは保守運用担当の技師長の管轄下にあり，一方，ＣＴＲＬは「Development」に徹し開発担当技師長の管轄下にある。
2. ＣＴＲＬは，日本が協力する唯一のＴ＆Ｔの研究機関である。
3. 研究は，通信機器の国産化に関心をもちプロトタイプの製作までとする。
4. 日本人各専門家はONE MAN−ONE PROJECT bace で指導にあたる。

しかし乍ら，電気通信分野における変化の激しさ，パ国の政策指向の変化も十分考えられるなど，ＣＴＲＬの位置づけ，研究方向は相当の流動性が予想される。

従って顧問を中心として，各専門家は，これら動向に注目しつつ，YEARLY bases による見なおし，協議を行い，ＣＴＲＬの弾力性と活力を維持することが，本件プロジェクトに対する日本の技術協力を成功に導く鍵であろう。

Ｉ－３　実施協議チームの編成

氏名	所属	担当
団長　友澤宙三	郵政省電波監理局監視部監視業務課 電波監視官	総括
団長　飯田明敏	日本電信電話公社 海外連絡室調査役	電話
団員　中島賢三	同上	無線・伝送
団員　今西隆	国際電信電話株式会社 大手町国際通信施設局課長	電信
団員　川上兼弘	国際協力事業団 社会開発協力部海外センター課	技術協力一般

I－4 調 査 日 程

日順	月日	曜日	行程	調査内容
1	3／9	㊎	成田 14：05 JAL-473 → 22：55 カラチ	
2	10	土	09：15 ラワルピンジ ← 07：30 イスラマバッド	大使館表敬　実施協議チーム訪パの目的，協力概要等説明及び調査日程調整
3	11	日	〃	電信電話総局表敬（T&T)及び第1回打合せ…調査方針．R／D案及び暫定スケジュール案提示及び説明。
4	12	月	〃	団員間打合せ，及びTAXILA MUSEUM，JALLIAN SITE，TARBELA DAM見学
5	13	火	〃	電信電話総局にて第2回打合せ…打合せ日程調整，R／D全般に係る意見交換
6	14	水	〃	〃　Siddiqi総裁表敬，協力概要等説明，及びCTRLサイト視察
7	15	木	〃	運輸通信省（次官）表敬，実施協議チーム訪パの目的説明，放送訓練学校視察。
8	16	㊎	〃	市場調査
9	17	土	〃	電信電話総局にて第3回打合せ…研究項目及びCTRL組織文掌等について意見交換
10	18	日	〃	〃　第4回打合せ…専門家指導内容，無償分機械搬入及び据付日程，TRCからの移行機材，供与機材等について意見交換
11	19	月	〃	大統領府経済局（次官補）表敬，実施協議チーム訪問の目的説明　電信電話総局にて第5回打合せ…開所時期，専門家派遣時期，研修員，プロジェクト運営機関等について意見交換
12	20	火	〃	討議議事録（R／D）等作成
13	21	水	ハリプール	電気通信大学（TSC），無線電話機器製造工場（NRTC）及び，電気通信研究センター（TRC）をそれぞれ訪問視察。パ側関係者主催昼食会出席
14	22	木	イスラマバッド	討議議事録(R/D)他署名(電信電話総局Siddigi総裁と友澤団長との間で署名),電信電話総局主催招宴
15	23	㊎	マリー	マリーマイクロ局視察
16	24	㊏	イスラマバッド	市場調査及び調査資料整理，大使公邸にて夕食会出席
17	25	日	〃	搬送機器製造工場（CTI）概要聴取，実施協議チーム主催昼食会
18	26	月	〃	イスラマバッド電話局訪問視察。大使館へ調査・協議結果報告及び帰国挨拶。
19	27	火	19：00 ラワルピンジ PK-309 → 20：50 カラチ 23：00	
20	28	水	14：05 JAL-472 成田 ←	

I－5　調査協力関係者

1. 在パキスタン日本国大使館

　　根　本　大　　使

　　飯　島　参　事　館

　　小　島　一等書記官

2. パキスタン運輸通信省

Mr. Shafqaat Ahmad	Secretary Communication, Ministry of Communication

3. パキスタン大統領府経済局

Mr. Mohammad Saeed	Deputy Secretary, Economic Affairs Division

4. パキスタン電信電話総局関係

Mr. S.A. Siddiqi	Director General, Pakisten Telegraph and Telephone Department (PTT)
Mr. S.A.H. Naqvi	Chief Engineer Development, PTT.
Mr. Sajjad Akhtar	Deputy Chief Engineer (L), PTT.
Mr. Sardar Muhammad	Deputy Chief Engineer (Inspection), PTT
Mr. Mahmood Hasan	Project Director, Central Telecommunication Pesearch Laboratories (CTRL)
Mr. Mohamad Arif	Divisional Engineer, CTRL.
Mr. Pervez Shahid	Divisional Engineer, CTRL.
Mr. Mohammad Mukhtar	Director, Telecommunication Research Centre (TRC)
Mr. Masood Ahmed	Director (T) G.M. I.T.R.
Mr. Uman M. Hamidi	Director (R&D), National Radio & Telecommunicartion Corporation (NRTC)
Mr. Farmanul Hag	Principal, Staff Training School

5. 日本人専門家

　　松　本　　昭　　顧　問（電気通信研究センター）

　　中　田　静　馬　　専門家（　　〃　　）

　　佐　藤　忠　政　　〃　（　　〃　　）

　　平　松　勝　之　　〃　（　　〃　　）

　　京　谷　公　雄　　〃　（連邦化学窯業公団）

II 討議議事録及びプロジェクト実施の暫定スケジュール等について

II－1 「討議議事録」

「プロジェクト実施の暫定スケジュール」並びに「討議議事録及び暫定スケジュールに関する議事録」（英文）

1. 討議議事録（英文）

THE RECORD OF DISCUSSIONS BETWEEN THE JAPANESE IMPLEMENTATION SURVEY TEAM AND THE AUTHORITIES CONCERNED OF THE GOVERNMENT OF THE ISLAMIC REPUBLIC OF PAKISTAN ON THE JAPANESE TECHNICAL COOPERATION FOR THE CENTRAL TELECOMMUNICATION RESERCH LABORATORIES PROJECT

The Japanese Implementation Survey Team (hereinafter referred to as "the Team") organized by the Japan International Cooperation Agency (hereinafter referred to as JICA) and headed by Mr. Chuzo Tomosawa, Senior Staff Engineer, Radio Frequency Monitoring Department, Radio Regulatory Bureau, Ministry of Posts and Telecommunications, visited the Islamic Republic of Pakistan from March 10th, 1979 to March 22nd, 1979 for the purpose of working out the details of the technical cooperation program concerning the Central Telecommunication Research Laboratories Project in the Islamic Republic of Pakistan.

During its stay in the Islamic Republic of Pakistan, the Team exchanged views and had a series of discussions with the Pakistani authorities concerned in respect of the desirable measures to be taken by both Governments for the successful implementation of the above-mentioned Project.

As a result of the discussions, the Team and the Pakistani authorities concerned agreed to recommend to their respective Governments the matters referred to in the document attached hereto.

Islamabad, March 22nd, 1979

Tsawa 22/3/79

Chuzo Tomosawa
Head of the Japan Implementation Survey Team

22/3/79

S.A. Siddigi
Director General of the Pakistan Telegraph and Telephone Department

THE ATTACHED DOCUMENT

I. COOPERATION BETWEEN BOTH GOVERNMENTS

1. The Government of Japan and the Government of the Islamic Republic of Pakistan will cooperate with each other in implementing the Central Telecommunication Research Laboratories Project (hereinafter referred to as "the Project") for the purpose of conducting practical research which promotes to development of systems and equipments in the field of telecommunications in the Islamic Republic of Pakistan.

2. The Project will be implemented in accordance with the Master Plan which is given in Annex I.

II. DISPATCH OF JAPANESE EXPERTS

1. In accordance with the laws and regulations in force in Japan, the Government of Japan will take necessary measures through JICA to provide at its own expense services of the Japanese experts as listed in Annex II through the normal procedures under the Colombo Plan Technical Cooperation Scheme.

2. The Japanese experts referred to in 1 above and their families will be granted in the Islamic Republic of Pakistan the privileges, exemptions and benefits no less favourable than those accorded to experts of third countries working in the Islamic Republic of Pakistan under the Colombo Plan Technical Cooperation Scheme.

III. PROVISION OF MACHINERY AND EQUIPMENT

1. In accordance with the laws and regulations in force in Japan, the Government of Japan will take necessary measures through JICA to provide at its own expense such machinery equipment and other materials necessary for the implementation of the Project as listed in Annex III, through the normal procedures under the Colombo Plan Technical Cooperation Scheme.

2. The articles referred to in 1 above will become the property of the Government of the Islamic Republic of Pakistan upon being delivered c.i.f. to the Pakistani authorities concerned at the ports and/or airports of disembarkation, and will be utilized exclusively for the implementation of the Project in consultation with the Japanese

experts referred to in Annex II.

IV. TRAINING OF PAKISTANI PERSONNEL IN JAPAN

1. In accordance with the laws and regulations in force in Japan, the Government of Japan will take necessary measures through JICA to receive at its own expense the Pakistani personnel connected with the Project for technical training in Japan through the normal procedures under the Colombo Plan Technical Cooperation Scheme.

2. The Government of the Islamic Republic of Pakistan will take necessary measures to ensure that the knowledge and experience acquired by the Pakistani personnel from technical training in Japan will be utilized effectively for the implementation of the Project.

V. MEASURES TO BE TAKEN BY THE GOVERNMENT OF THE ISLAMIC REPUBLIC OF PAKISTAN

1. In accordance with the laws and regulations in force in the Islamic Republic of Pakistan, the Government of the Islamic Republic of Pakistan will take necessary measures to provide as its own expense :

   (1) Services of the Pakistani counterpart personnel and administrative personnel as listed in Annex IV ;
   (2) Land, buildings and facilities as listed in Annex V ;
   (3) Supply or replacement of machinery, equipment, instrument, vehicles, tools, spare parts and any other materials necessary for the implementation of the Project other than those provided through JICA under III above ;
   (4) Transportation facilities and travel allowances for the Japanese experts for the official travel within the Islamic Republic of Pakistan.

2. In accordance with the laws and regulations in force in the Islamic Republic of Pakistan, the Government of the Islamic Republic of Pakistan will take necessary measures to meet ;

   (1) Expenses necessary for the transportation within the Islamic Republic of Pakistan of the articles referred to in III above as well as for the installation, operation and maintenance thereof ;

   (2) Customs duties, internal taxes and any other charges, imposed in the Islamic Republic of Pakistan on the articles referred

to in III above ;

(3) All running expenses necessary for the implementation of the Project.

VI. ADMINISTRATION OF THE PROJECT

1. The Director General of the Pakistan Telegraph & Telephone Department (hereinafter referred to as PTT) will have the overall responsibility for the implementation of the Project.

2. The General Manager/Project Director of the Central Telecommunication Research Laboratories (hereinafter referred to as CTRL) will be responsible for the operation of the Project.

3. Japanese Chief Advisor with support of Japanese experts will take appropriate care of technical matters and give necessary technical and managerial advice on the Project to the General Manager/Project Director of the CTRL and, if necessary, to the Director General of the PTT in close consultation with the General Manager/Project Director of the CTRL.

4. Japanese experts will give technical instruction and advice related to matters concerning the implementation of the Project.

5. Research Board headed by the Director General of the PTT will make and determine the basic policy in regard to the implementation of the Project.

6. Project Committee will be established for the Administration of the Project.
   The PTT, factories and Japanese Chief Advisor will be included in the Committee members as well as staff of the Project.

7. For the effective and successful implementation of the Project, the PTT will coordinate the Pakistani organizations concerned.

VII. CLAIMS AGAINST JAPANESE EXPERTS

The Government of the Islamic Republic of Pakistan undertakes to bear claims, if any arises, against the Japanese experts engaged in the Project resulting from, occuring in the course of, or otherwise connected with the discharge of their official functions in the Islamic Republic of Pakistan except for those arising from the willful misconduct or gross negligence of the Japanese experts.

VIII. MUTUAL CONSULTATION

There will be mutual consultation between the two Governments or any major issues arising from, or in connection with this Attached Document.

IX. TERM OF COOPERATION

The duration of the technical cooperation for the Project under this Attached Document will be five years from March 22nd, 1979.

ANNEX I

MASTER PLAN

1) The CTRL will be established as the PTT's research laboratory.

2) Research activities of the CTRL will be as follows ;

   (1) Research and development of telecommunication equipments in the fields of ;

   (A) Telephone

   (B) Telegraph

   (C) Radio

   (D) Transmission

   (E) Manufacturing

   (2) Development will finish at the completion of prototype, not including the mass production which will be made in Pakistani factories.

ANNEX II

JAPANESE EXPERTS

1) Chief Advisor
2) Coordinator
3) Expert in the fields of :
   (1) Telephone
       Telephone
       Ess soft
   (2) Telegraph
       Data
   (3) Radio
       Microwave
   (4) Transmission
       Carrier
       PCM
   (5) Manufacturing
       Circuit Component
       (Installation, Operation guide)

Note: If necessary, short-term experts other than those experts will be dispatched.

ANNEX III

LIST OF THE ARTICLES

Machinery and equipment for the Section of :

1. Telephone Equipment
2. Switching System
3. Telegraph
4. Power Plant
5. Microwave
6. V.H.F
7. Carrier
8. P.C.M.
9. Outside Plant
10. Semiconductor
11. Computor
12. Chemical Lab./Testing Lab.

For details, see annexure III attached with minutes of Record of Discussions. Format A-4 may be processed for supply of the items.

ANNEX IV

LIST OF PAKISTANI STAFF

1. General Manager
2. Technical staff for Research Department :
   (1) Telephone
   (2) Telegraph
   (3) Radio
   (4) Transmission
   (5) Manufacturing
   (6) Planning Coordination
3. Administrative staff
   (1) Administration
   (2) Accounting
   (3) Clerical work
   (4) Others

ANNEX V

LIST OF LAND, BUILDINGS AND FACILITIES

1. Land

2. Buildings and facilities
   (1) Laboratories for 6 Departments
   (2) Anechoic room
   (3) Adequate office facilities
   (4) Rooms for Japanese Chief Advisor, Coordinator and Experts
   (5) Workshop
   (6) Store-house
   (7) Electric power plant
   (8) Miscellaneous rooms

2. プロジェクト実施の暫定スケジュール（英文）

TENTATIVE SCHEDULE OF IMPLEMENTATION

A N D

THE PLAN OF ACTIVITIES ON THE TECHNICAL COOPERATION FOR THE CENTRAL TELECOMMUNICATION RESEARCH LABORATORIES PROJECT IN THE ISLAMIC REPUBLIC OF PAKISTAN

Islamabad, March 22nd, 1979

JAPAN INTERNATIONAL COOPERATION AGENCY (JICA)

A N D

PAKISTAN TELEGRAPH AND TELEPHONE DEPARTMENT (PTT)

The Japan Implementation Survy Team and the Director General of the Pakistan Telephone and Telegraph Department have jointly formulated, for reference of "the Record of Discussions between the Japanese Implementation Survey Team and the Authorities concerned of the Government of Pakistan on the Japanese Technical Cooperation for the Central Telecommunication Research Laboratories Project", the Tentative Schedule of Implementation and the Plan of Activities as annexed hereto.

Islamabad, March 22nd, 1979

CHUZO TOMOSAWA
HEAD OF
THE JAPAN IMPLEMENTATION
SURVEY TEAM.

S.A. SIDDIQI
DIRECTOR GENERAL OF
THE PAKISTAN TELEGRAPH AND
TELEPHONE DEPARTMENT.

(1) Tentative Schedule of Implementation

ITEM \ YEAR	1979	1980	1981	1982	1983	1984
Term of Cooperation (R/D)	Mar.					
(Dispatch of Japanese Experts) 1. Chief Advisor (1) 2. Coordinator (1) 3. Experts (A) Telephone Dept. Telephone (1) Ess soft (B) Telegraph Dept. Data (1) (C) Radio Dept. Microweve (1) (D) Transmission Dept. Carrier (1) PCM (1) (E) Manufacturing Dept. Circuit Component (1) (F) Short-term Experts	Jul. Sep.					
(Provision of Equipment)						
(Training of Pakistani personned in Japan) 1. General Manager (1) 2. Technical personnel (A) Telephone Dept. (B) Telegraph Dept. (C) Radio Dept. (D) Transmission Dept. (E) Manufacturing Dept. (F) Planning Coordination Dept.	Several Persons	Several Persons	Several Persons	Several Persons	Several Persons	
(Assignment of Pakistani staff) 1. General Manager (1) 2. Technical Personnel (A) Telephone Dept.(8) (B) Telegraph Dept.(8) (C) Radio Dept. (8) (D) Transmission Dept. (8) (E) Planning Coordination (4) 3. Secretary for Chief Advisor (1) 4. Administrative Personnel (12)	Oct. July					
(Operation of the CTRL)	Nov.					
(Construction of Building and Facilities)	→					

Note: This schedule is formulated tentatively on the assumption that necessary budget will be acquired. This schedule is subject to change within the scope of the "Record of Discussions" in the Future if necessary.

(2) Plan of Activities

Department	Main priority project	1979	1980	1981	1982	1983	1984
Telephone	* High Loss Telephone set(D)	←	→				
	Push Button Telephone set (D)	←	→	→	→		
	* Small Type Ess soft(S/D)	←	→	→	→	→	→
	Auto-routine Tester (D)	←	→	→			
Telegraph	VFT Terminal Equipment (S/D)	←	→	→			
	Multi Telegraph Equipment (S/D)	←	→	→	→	→	→
	* Data MODEM (S/D)	←	→	→	→	→	→
Radio	Power Supply Unit(S/D)	←	→	→	→		
	* 1800ch FM Transmitta and Receiver (S/D)	←	→	→	→	→	→
	FM MODEM (D)	←	→	→	→	→	→
	Wave Guide & Attennator for M/W. (S/D)	←	→	→	→		
	IF Aplifier (S/D)	←	→	→	→		
	UHF 12 ch Set (S/D)		←	→	→		
	Self Supporting & Guide Structure (S/D)	←	→				
	VHF T/R, power Ampliffer Duplex Filter (S/D)	←	→	→	→	→	
	Automobile phone (S/D)	←	→	→	→	→	
	High Gain Antena (S/D)	←	→	→			
	150 MHZ Walkie-Talkie (S/D)	←	→	→			
Transmission	* Terminal Equipment of Coaxialcable (S/D)	←	→	→	→	→	→
	* Terminal Equipment of PCM (S/D)	←	→	→	→	→	→
	power Feed Equipment (COX) (S/D)	←	→	→			
	Power Feed Equipt. (PCM) (S/D)	←	→	→	→	→	
Manufacturing	Primary/Secondary Standard (st.)	←	→	→	→	→	
	IC (P)	←	→	→	→	→	
	* Resister & Condencer(P)	←	→	→	→	→	
	Computer (S)	←	→	→	→	→	
	Work Shop (S/App.)	←	→	→	→	→	
	Test Facilities (S/App.)	←	→	→	→	→	

Note: S---------Study
D---------Development
St.-------Standardization
P---------Produce
App.------Application
*---------Japanese Expert's high priority project

3. 討議議事録及び暫定スケジュールに関する議事録（英文）

MINUTES FOR THE RECORD OF DISCUSSIONS AND THE TENTATIVE SCHEDULE CONCERNING CTRL PROJECT
P A K I S T A N

The JICA Mission (headed by Mr. Chuzo Tomosawa) stayed in Islamabad for about 2 weeks since March 10, 1979 had discussions with T & T Department staff, signed the record of discussions and tentative schedule. The detailed matters other than those described in above mentioned documents, shall be implemented through this minutes.

1) COMMISSIONING OF CTRL:-

Keeping in view the schedule of installation of research equipment (Annexure - I) it has been planned to commission the Central Telecom. Research Laboratories in first week of November 1979. However November 3rd was recommended as a first choice being National Holiday in Japan as "CULTURE DAY". The range of guests or participants, preparation of the ceremony will be discussed later between Japanese side (Embassy, Japanese Experts) and T & T side.

2) DISPATCH OF JAPANESE EXPERTS FOR CTRL:-

First group consisting of an Advisor, one Co-ordinator and one or two experts would join the CTRL in July/August 1979, and the remaining experts would join in September/October 1979. Japanese experts working in TRC Haripur are planned to go back to Japan in early November 1979.

3) PROJECT COMMITTEE:-

The Committee meetings should be held at least once in every three (3) months for the effective administration of research activities in CTRL.

4) MUTUAL CONSULTATION IN :-

1) Training of Pakistani personnel in Japan (Formats A2, A3).
2) Additional machinery, equipment and spare parts or components (Format A4).

should be made with Japanese experts and requested through Colombo Plan Formats on yearly basis before November every year. Additional machinery and equipment could be supplied if necessary through normal procedure of JICA within the range of budget allowed by Japanese Government during cooperation term. (Rough estimation of above mentioned machinery and equipment is shown

as annecture II)

JICA Co-ordinator will co-operate for such documentation procedure. He will also coordinate every day procedure among Japanese experts such as correspondence between Pakistan and Japan, and assistance for Chief Advisor.

Training program for F.Y 1979 is as follows : -

No.	COURSE	No. of Persons	TERM	Note
1)	Telephone Switching (I)	1	Apr. 5 - Jul - 15	NTT
2)	Carrier Telephony	1	May 3 - Aug - 12	NTT
3)	Telephone Outside Plant	1	Jun. 7 - Sep.16	NTT
4)	Microwave Communication	1	Jul.5 - Oct.15	NTT
5)	Int. Telex Technique	1	Aug.16 - Nov. 5	KDD

(Note 1) In addition to above, study tour for senior staff members of PTT should be arranged.

(Note 2) The increase of trainees and expansion of training period should be considered in future. T & T explained the detail of training as annexture III and requested this should be considered in training program in future.

5) ACCOMMODATION, FURNITURE: -

Accommodation and furnitures will be acquired by Japanese side with full T&T side cooperation. T&T submitted the information as annexture IV.

Import taxes for cars, air-conditioners, refrigerators will be exempted in line with Colombo Plan cases.

Benefit to be given to Japanese Expert by Pakistani Government will not be lower than those given to ITU/COLOMBO PLAN EXPERTS in general. T&T department would consider possibility of providing a telephone connection in the official capacity of the Japanese experts. Japanese side wanted provision of accommodation for Japanese experts by T&T side in future and T&T side explained to make effort to meet this requirement but this is very difficult.

6) SCHOOLS, HOSPITALS:-

As for information and procedures, T&T will give full support to Japanese experts.

7) TRANSFER OF PERSONNEL AND EQUIPMENT FROM TRC TO CTRL:-

1) Personnel N I L
2) Equipment List(I) as early as possible

List (II) at the time of necessity with due assignment of personnel (Annexure V).

8) TRC experts will co-operate within their remaining capacity and with due agreement by JICA for installation supervision of grant assistance machinery and equipment upon official request from T&T side.

9) JICA mission proposed on Organization, job description and job evaluation for CTRL (Annexture VI). After discussions minor changes were made such as working relationship between Japanese experts and Pakistani counterparts.

Whole of these matters being so important, should be discussed later in further detail between Japanese Chief Adviser and General Manager/Project Director of CTRL.

10) CHANGE OF PROJECTS :-

Some changes of projects between TRC and CTRL have been proposed by T&T and agreed as follows :-

A) CTRL to TRC

1) Outside Plant Section: Line Fault location equipment
2) " " " : Standardization of Cable jointing.
3) " " " : Standardization of Material and installation.

B) TRC to CTRL

1) Switching System Section: Include Line concentrator to ESS
2) Power Section: Add 24V 75AH, 60V 25A, 100 A (60V 50 A will be completed at TRC).
3) Microwave Section: Add UHF 6 CH to UHF 12 CH.

Note: 1) Change "S" to "S/D" for 1800 CH FM T/R in Microwave section.
2) Change of Priotiry (II to I) : 150 MHZ walkie Talkie, Power feed equipment (COX, PCM).
Priotity (I to II) : 10 KW Transmitter, TR Radio Terminal.

Above mentioned changes of projects should be discussed and recognized by " Project Committee " in later days.

11) SUPPLEMENT :-

Previous " Record of Discussion " signed on December 24, 1978 will be substituted by concerned documents (The Record of Discussions, the tentative schedule and these minutes) hereafter.

CHUZO TOMOSAWA
HEAD OF THE JAPAN
IMPLEMENTATION SURVEY TEAM.

S.A.H. NAQVI
CHIEF ENGINEER (DEVELOPMENT)
PAKISTAN TELEGRAPH AND TELEPHONE
DEPARTMENT, ISLAMABAD.

Annexure I

TENTATIVE IMPLEMENTATION SCHEDULE

SECTION	MAR 1979	APR	MAY	JUN	JUL	AUG	SEP	OCT	NOV	DEC	JAN 1980	FEB
ELECTRONIC SWITCHING SYSTEM					INSTALLATION			TESTING			RETESTING	
MICROWAVE												COMMISSIONING
RADIO TELEPHONE MOBILE												
COMPUTER												
COAXIAL CABLE	TRANSPORTATION FROM JAPAN TO PAKISTAN	CUSTOM CLEARANCE & INLAND TRANSPORTATION										
HUMIDITY CHAMBER												
D.C. POWER SUPPLY												
R/C MANUFACTURE												
SEMICONDUCTOR MANUFACTURE												
WORKSHOP												
ELECTROPLATING INSTALLATION												

LIST OF ADDITIONAL EQUIPMENT

Section No.	Equipment	Quantity	'79	'80	'81	'82	'83
S-1	Telephone Equipment						
	Telephone sets for high loss sub line	6	0				
	Side tone attenuator measuring set	1	0				
	Capacitor variable	1					
	Resistance variable	1					
	Circuit tester	1	0				
	Frequency counter	1	0				
	Picture phone	1					
S-2	Switching System						
	Impusle recorder	1					
	Capacitor variable	1					
	Selective level meter	1	0				
	Resistance Variable	1					
	Syncroscope dual scope	1	0				
	Mini second meter	1					
	Test call generator	1					
S-3	Telegraph						
	Spare units of TDM	2	0				
	V.F Facsimile equipment	2					
S-5	Power Plant						
	Ac precision 13 range Volt/Ammeter	1	0				
	DC " 17 "	1	0				
	Divert Acting Electrical Ac Recording Voltmeter	1	0				
	DC "	1	0				
	Noise meter	1					
	Divert Acting DC current Recorder	1	0				
	Gauss Meter	1					
	Portable Power Factor meter	1	0				
	Line current Tester	1	0				
	Phase Rotation meter	1	0				
	Sliding AC voltage Regulators (Slidac)	1	0				
	Surface temperature Indicator	1	0				
S-6	Microwave						
	Antenna pattern measuring set	1					
	Spectrum analyser	1					
	Microwave power meter	1					
	Barretor mount	1					
	Vector scope	1					
	Wave guide attenuator	1	0				
	Directional coupler	1	0				
	Phase shifter	1	0				
	Isolator	1	0				
	Magic T	1	0				
	Digital multimeter(Voltmeter)	1					

Section No.	Equipment	Quantity	'79	'80	'81	'82	'83
S-7	V.H.F.						
	150MHz VHF Tx & Rx (included acc'ries)	2					
	Mobile radio test set	1					
	Circuit tester	1					
	Dual pen in recorder	1					
	Walbie Talkie set	2	0				
	V.H.F. VSWR meter	1					
S-9	Carrier						
	Noise figure measuring set	1					
	Distortion factor meter	1					
	Frequency counter	1	0				
	White noise generator	1					
	Variable attenuator	1	0				
	Variable high pass filter	1	0				
	Group delat measuring set	1	0				
	Automatic in-Circuit transistor Checker	1					
	White noise detector	1	0				
	Variable low pass filter	1	0				
S-10	P.C.M.						
	Amplitude delay distortion analyser	1					
	PCM-30 ch system exclude measuring set	1	0				
	PCM signal generator	1					
	Lenel Digital oscillator	1					
	Measurement of total distortion with level tester	1					
	Lenel meter with psophometer	1					
S-11	Outside plant						
	B.W. Tester	1					
	Jointing measuring set	1	0				
	Splicing measuring set	1					
	Psophometer	1					
S-13	Semiconductor						
	Thickness measuring instrument	1					
	Platinum resistance thermometer	1					
	Curve tracer	1					
S-15	Computer						
	Digital memory oscilloscope	1	0				
	X-Y Plotter	1					
S-18	Chemical Lab. /Testing Lab.						
	Electric furnace Temperature	1					
	High Voltage tester	1					
	Oven	1					

Annexure - II (2)

20-3-1979

SEC	NO	PROJECT	PY	SCHEDULE 79	80	81	82	83	84	REMARK
TEL EQP (1)	1	D. high loss tel set	I	0.5	+1	+2				Q/Y 10,000. cost 300 RP.
	2	D.push button tel set	I	0.5	+1	+2				
	3	D.small tel set	III							
	4	D.electronic tel set	II							after item I
	5	D.picture phone	III							
	6	D.card dial phone	III							
	7	D.Button tel set	II							
SW SYS (2)	1	S/D small type Ess.	I	0.5	+2	+1				S:4 5 years includes L/C
	2	S/D.subs iden'cation equip	II							
	3	D.mobile exchange	II							
	4	D.remote cont Ess	III							
	5	D.auto-routine tester	I	0.5	+1	+1				Q/Y 50
	6	D.auto line routiner	II							
TGF (3)	1	S/D.VFT terminal equip	I		+2	+4				S+6 DX
	2	S/D.multi tgf equip	I	0.5	+1					
	3	S/D.electronic teleprinter	III							
	4	S/D. TF/carrier FAY	II							
	5	S/D. auto code senden	II							
DATA (4)	1	S/D. MODEN	I	+3	+4					
	2	S/D.keyfoard printer	II							
	3	S/D.error correction equip	II							
POW (5)	1	S/D.power supply unit	I	1+2	+4					800AH.add 24A 75A,60V25A, 100A
	2	S/D.A.V.R.	II							
	3	S/D.C/DC displey of Batt	III							+0 TRC
U (6)	1	S/D 1800ch FM T and R	I	1+	1					Q/Y 100 S:2 years D:manufactory
	2	D.FM.MODEM	I	0+	1					
	3	S/D.compensatory equip	II		0+0.5					
	4	S/D.W/G& att for M/W	I	0+	1					
	5	S/D.IF amp	I	0+	0.5					
	6	S/D.UHF 12 ch set	I		0+ 1					400 MHZ. includes 6 CH
	7	S/D.self supporting	I		0+0.5					
	8	S.Laser	III		0+	0+ 1				
	9	S.parametric amp	II		0+	0+ 1				
	10	S.servo-motor	II		0+	0+ 1				

SEC	NO.	PROJECT	PY	SCHEDULE 79	80	81	82	83	84	REMARKS
VHF 7	1	S/D T/R,power Amp, Duplex F:L	I		0+	1				150 MHZ single channel
	2	S/D Automobile phone	I		0+	1				
	3	S/D 150 MHZ Walkie Talkie	I		0+	0+1				
	4	S/D High Gain Antenna	I		0+	0+1				
HF 8	1	S/D 10 KW X mitter	III		1					
	2	S/D Lin compex	II		0+	0.5				
	3	S/D Tr. Radio Terminal	I		0+	0.5				
	4	S/D Long periodic Aerial	II		0+	0+1				
COX 9	1	S/D Terminal Equip COX	I		1+	1+1				Q/Y 100,D:5MG&L.A
	2	S/D Remote Supervisory Equip	II		0+	1+1				Q/SY 20.
	3	S/D Power Feed Equip	I		0+	1+1				Q/SY 20.
PCM 10	1	S/D Terminal Equip of P.C.M.	I		1+	1+1				Q/SY 100
	2	S/D Remote Supervisory equip.	II		0+	1+1				
	3	S/D Power Feed Equipt	I		0+	1+1				
OUT	1	S/D Accessaries	II							Semi Automatic Spricing Machine, after item 2.
12	1	Primary/secondary standard	I		1+	2+1				Caribration of Measuring Set
13	1	Produce I.C	I		1+	2+2	+11			
14	1	Produce, registor condencer	I		1+	3+3	+6			
15	1	S.Computor	I		1+	1				
16	1	S/Application Work shop	I		0+	1+	1+18			
18	1	S/Application Test Fascilities	I		0.5	+1	+1			

COMPUTER HARDWARE

1) General

a) Advantages of computer systems; introduction to software; different computing systems and their evaluation; system block diagram and brief discription, Introduction to data communication components and apparatus, drawing reading etc. 2 weeks

b) Practical 1 week

2) a) Fundamental of computers e.g. digital arithmatic, Boolean algebra, Minimization of Boolean functions, Logic circuits and their characteristic switching matrices, Input/Output and other assosiated devices, MODEM and their characteristics. Decision tables and processing logic, Arithmatic elements, Multiprocessor systems etc. 12 weeks

b) Practical 4 weeks

3) Study tour to different research organisations telecom centres/manufactures etc. 2 weeks

4) a) Logical design of simple digital computer with special reference to 100F system, including computer design, System design, Functional design detail design and complete computer and system discription etc. 8 weeks

b) Techniques of computer based telecom system-hardware with detailed study of actual system, Tarrifs etc. 4 weeks

c) Practical 3 weeks

5) Study tour 2 weeks

6) On the job

Installation, wiring and operation of 100F mini-computer equipment including testing, Fault tracing, Floor lay-out planning etc. 4 weeks

TOTAL 42 weeks

COMPUTER-SOFT-WARE

1) General

   a) Computer operations e.g. electronic digital computers, Application of Computer to problems in business, General purpose computer, Time shared computers, Data communications, Introduction to computer hardware, general componets and apparatus etc. 4 weeks

2) a) Fundamental of programming e.g. computer programs basic components of a digital computers, Construction of storage, BRANCH, SKIP, instructions; programming systems, Assembly language, compiler language, High level languages, flow charting techniques, system library subroutness; Operating soft ware, Macros etc. 12 weeks

   b) Program writing in FORTRAN language with complete knowledge of data files, data banks, store-merge, data conversion, etc.

   c) Practical 4 weeks

4) Study tour 2 weeks

5) a) Introduction to system analysis :-

      i) Project management control.

      ii) Elements of PERT/CPM

      iii) Critical path analysis.

      iv) Resources analysis scheduling i.e. linear programming

      v) Management information system

      vi) Simulation programs

      vii) Telecommunication network analysis and design, Billing data analysis, traffic calculations, service grade analysis, scientific calculations etc.

   b) Detailed study of one of the computer based telecommunication systems tarrif etc. 4 weeks

   c) Practical 2 weeks

6) Study tour 2 weeks

TOTAL 42 weeks

DATA COMMUNICATION

1) General

Introduction to data communication and data transmission, Definition of different terms used in data communication, Introduction to digital computers and their role in data communications, Brief description of PCM system, Scope and field of application of data service, general idea of components and apparatus etc. 4 weeks

2) a) Fundamentals of Data communications e.g. digital arithmatic, modulation and transmission rates, Synchronous and asychnonous data Principle and specification of different types of modems, i.e. 300 BPs, 1200 BPs, 2400 BPs, 4800 BPs, 9600 BPs, Different types of modulations used in data communication (AM,FM,DM, etc.) Definitions and characteristics of different interchange circuits,; automatic calling and answering equipment, Timing of line signals Forward and backward channels, DTE, DCE, Characteristics of transmission media, Analog to digital converters and vice versa etc. 12 weeks

b) Practical 4 weeks

3) Study tour 2 weeks

4) Data network planning, switched network, Switched digital networks, switched telephone network, Telegraph circuits, Voice graded circuits, wideband circuits, Level plans for data transmission, existing Datal services and the new services in the worlds, Multiplexing techniques etc. Connection, installation and operation of Data equipment. 12 weeks

b) Practical 4 weeks

5) Study tour 2 weeks

6) a) Testing and Fault tracing.

i.e. The level conditions, measurements of terminal return loss, assymetry loss, noise Voltage, Attenuation distortion Group delay distortion, extraneous Voltage, Frequency drift, Phase Jitter, Impulsive noise, Bit error rate, Block error rate etc. 4 weeks

b) Tarrifs

TOTAL 42 weeks

PCM - TDM

1) General

Scope and application of PCM systems, Introduction to data transmission, advantage of PCM system compared to others. Advance developments. General idea of components and apparatus, diagram reading etc. 3 weeks

2) a) Fundamental of PCM system i.e. digital arithmatic, Sampling, Quantizing, Coding/decoding, Delta modulation, Time division multiplexing, Ist order (30CH) 2nd order (120CH) 3rd order (480CH) PCM system, Parameter and types of cables and repeater, PCM on Microwaves etc. 12 weeks

b) Practical 4 weeks

3) Study tour 2 weeks

4) a) Study of on actual PCM system, Planning of the routes, cable behaviour, Traffic Interface unit design and its functions, Signalling Critica (F-I, E.M.D., ESS etc.) Programmable control logic unit, power supplies system composition and operation etc. 8 weeks

b) Practical on the Job 4 weeks

5) Study tour 2 weeks

6) a) Fault tracing/testing i.e. testing of cable, repeater, multiplexing equipment etc. measurement of cross talk, quantization noise, netloss deviation, channel amplification etc. 6 weeks

TOTAL 41 weeks

INFORMATION FOR JICA DELEGATION

1) ACCOMMODATION:

2 Bed Room, 3 Bed Room and 4 Bed Room houses in Islamabad alongwith Drawing, Dinning Room, Kitchen, independent Bath Rooms are available on hire around Rs. 1500/-, Rs. 2500/- and Rs. 4000/- per month respectively. Normally advance rent of one year of two years are demanded by the landlord depending upon the individual cases. Renting of house to the foreigners is preferred because of the better up keep. A number of estate agencies are operating in Islamabad and Rawalpindi who help in the hiring of the houses. All possible helps within means of the T & T will be afforded to the experts for searching of the houses according to their requirements and liking and finalization of the deal.

2) FURNITURE:

T & T does not provide any furniture. Items such as beds, carpets, curtains, tables, sofas, chairs etc. can either be purchased or taken on hire. It would be preferable that these items are purchased in the first place and while going back the same can be disposed of at a good price. Furniture is an item which is depended very much on individual liking. Therefore, it will not advisable to purchase the same in advance. Rs. 20,000/- to Rs. 25,000/- should be sufficient to adequately furnish the houses according to ones own taste.

3) ELECTRICAL HOUSE HOLD APPLICANCES:

Electrical house hold appliances like air-conditioners, refrigerators etc. are available in the open market but are very expensive. Fridges of about 9 cubic feet with separate freezer compartment are available at about Rs. 9,000/-. Air-Conditioner one ton and one and half ton capacity with cooling and beating system are available between Rs. 17,000/- to Rs. 20,000/-.

4) REPAIR OF ACCOMMODATION:

It is normally the responsibility of the landlord to carryout general repair of the house, painting, white washing etc. "Clause of the same effect is generally provided in the hiring agreement. However tenant is also required to carryout repairse of items which are damaged due to mis-handling. T & T can assist in what-ever possible manner within resources available at its disposal.

5) MEDICAL AID:

In two cities of Islamabad and Rawalpindi two Hospitals are available for the treatment of government servants i.e. Central Government Poly Clinic in Sector G-6, Islamabad and Central Government Hospital on Murree Road Satellite Town, Rewalpindi. Additionally three (3) more hospitals are also available in Rewalpindi city. The names of the same are Holy Family Hospital Satellite Town, Cantorment General Hospital Rawalpindi cantt and Combined Military Hospital in Rewalpindi Cantt. Except for the Combined Military Hospital, treatment can be availed from the any other hospitals. Additionally a number of private clinics run by Specialists and general practitioners are also available in Islamabad and Rawalpindi. All these hospitals are well equipped and provide adequate medical facilities. The services of all kinds of medical Specialists are also readily available. Separate Dental clinics are also available run by qualified Dental Surgeons and Dentists.

6) SCHOOLS:

A number of Federal Government Model Schools (English Medium) are available in Islamabad. However most of the childrens of the foreigners avail education facilities in the International School run by the Americans in Sector H-9 near to the Research Laboratories. No separate school in Japanese language is available. Specific information about these may be had from the Embassy of Japan.

Photo copy of the map of Islamabad published by the Capital Development Authority alongwith vital information is enclosed herewith.

LIST-1

1. Switching Section

(1)	FRTEX-400 (FUJITSU)	1
(2)	AC Precision 13 Range Volt Ammeter (YEW)	1
(3)	DC Precision 17 Range Volt Ammeter (YEW)	1
(4)	Dial Variable Resister REC-1 (YEW)	1
(5)	Measuring Set TT-3 (ANDO)	1
(6)	Variable Capacitor SOKUHAN - 1 M (ANDO)	1
(7)	Crosstalk Measuring Set MCV-1A (ANDO)	1

2. Telegraph Section

(1)	DC Precision 17 Range Volt Ammeter (YEN)	1
(2)	Sliding AC Voltage Regulator	1
(3)	Regulated DC Power Supply	1
(4)	Variable High Pass Filter (ANDO)	1
(5)	Variable Low Pass Filter (ANDO)	1

3. Carrier Section

(1)	MHNW-33A Network (ANDO)	1
(2)	V.T.V.N. TE-65	1

4. V.H.F. Section

(1)	DC precidion 17 Range Volt ammeter (YEN)	1
(2)	Electoronic Voltmeter ML-43A (ANRITSU)	1
(3)	Vector Voltmeter 8405A (YHP)	1

5. Library All books written in Japanese

LIST-2

1. Microwave Section

(1)	Microwave survey and Propagation Test Equipments (Detail is shown in following sheets.)	1
(2)	Video Cassette Recorder (SONY)	1
(3)	Video Cassette Player (SONY)	1
(4)	Video Monitor (NEC)	1
(5)	Video Coder (SONY)	1
(6)	Video Camera (SONY)	1
(7)	Video Monitor (SONY)	1
(8)	Polaroid Camera	1
(9)	8mm Camera (CANNON)	1
(10)	8mm Projector (CANNON)	1

2. MICROWAVE SURVEY AND PROPAGATION TEST EQUIPMENTS

1.	Ink-writing oscillograph (SANEI)	1 set
2.	Tracking Scope (TAKEDA)	1 set
3.	Frequencycounter (TAKEDA)	1 set
4.	Mirroe Ball	2 sets
5.	Cavity Frequency Meter (SHIMADA) 2GHz use	2 sets
6.	Cavity Frequency Meter (SHIMADA) 6GHz use	1 set
7.	Theodlite with Tripod	2 sets
8.	150MHz 10W Mobile Radio	2 sets
9.	150MHz 1W VHP Radio Telephone	2 sets
10.	Dry-Wet Thermometer 7days type	2 sets
11.	Field Intensity Meter 2GHz use	1 set
12.	Field Intensity Meter 6GHz use	1 set
13.	Power meter	1 set
14.	Barretter Mount 2GHz use	1 set
15.	Barretter Mount 6GHz use	1 set
16.	Sweep Signal Generator 2GHz use	1 set
17.	Sweep Signal Generator 6GHz use	1 set
18.	Portable Transmitter 2GHz use	1 set
19.	Portable Transmitter 6GHz use	2 sets
20.	Portable Engine Generator	3 sets
21.	Automatic Voltage Stabilizer	2 sets
22.	AC/DC Converter	2 sets
23.	DC/AC Inverter	2 sets
24.	Multi-terminal Transformer	2 sets
25.	Battery	4 pcs.
26.	Portable Structure Tower	1 set
27.	Movable Parabola Antenna and Tripod	2 sets
28.	Supporting Pole for Mirror Ball	1 set
29.	Wooden Staff	2 pcs.
30.	Measuring Pole	6 pcs.
31.	Measuring Tape	2 pcs.
32.	Clinometer	2 pcs.
33.	Binocular	2 pcs.
34.	Aneroid Barometer	2 pcs.
35.	Altimeter	2 pcs.

36.	Calculator	2 pcs.
37.	Wet & Dry Thermometer	2 pcs.
38.	TOYOTA Land Cruiser	2 pcs.
39.	Coaxicial Cord	1 set
40.	Coaxicial Adaptor	1 set
41.	Connector	1 set
42.	Flexible Waveguide	3 pcs.
43.	Adapter	4 pcs.
44.	Isolator 2GHz use	2 pcs.
45.	Isolator 6GHz use	2 pcs.
46.	Directional Coupler 2GHz use	2 pcs.
47.	Directional Coupler 6GHz use	2 pcs.
48.	Termination 2GHz use	4 pcs.
49.	Termination 6GHz use	4 pcs.
50.	Attenuator	1 set
51.	Pad	2 pcs.
52.	Power Cord	1 set
53.	Measuring coaxicial cord	1 set
54.	Parts for Switchboard	1 set
55.	Recording Paper	1 set
56.	Table Tap	6 pcs.
57.	Manila Hope	1 pc.
58.	Sheet water proof	10 pcs.
59.	Safety Bolt	4 pcs.
60.	Tool Set	2 pcs.
61.	Others	

Annexure - VI

(Draft)

Some proposals on organization,
job description and job evaluation for CTRL

March 1979

This is a brief idea about CTRL organization and some hints on research projects administration from Japanese side. It needs further modifications according to Pakistani side opinions and actual experiences.

It is our great pleasure if this paper can be of nay help for better administration of CTRL.

1. Organization

(1) Basic idea

The following items could be regarded as important factors to setup an organization of research laboratory.

(a) Rational organization

Weighted assignment of personnel to high priority projects and/or grouping of projects having similar technology.

(b) Flexible organization

Flexibility for reduction, expansion or mutual assistance of organization at the completion or beginning of projects. (ex. project team method)

(c) Manageable organization

Simple organization, clear allotment of responsibility and decentralization of authority.

(2) Actual procedures

(a) Clarification of organization functions

Generally, organization of laboratories could be divided into following functions:

A) R&D Department (1) Research Management Division
(2) R&D Division
(3) Design & Production Division

B) Service Department (4) Technical support Division
(5) General Affairs Division

The R&D division, main part of laboratory, can also be

divided into some divisions in general. Generally, two ways of division might be possible as follows:

A) Service oriented division

Ex. Telephone, Telegraph, Data Communication, Facsimile, etc.

B) Technology oriented division

Ex. Switching, Transmission, Outside Plant, Subscribers equipment, etc.

For laboratory, aiming at developing techniques, the latter may be better for management porpose.

An example of early stage organization of CTRL from above mentioned standpoint is given in Fig. 1.

Also, the relation between T&T and Japanese Experts is shown in Fig. 2.

(b) Index for staff allocation

Allocation of personnel could be done due to following indices, taking account of project characteristics (Study or Development) or experience at TRC, Haripur, etc.

For study oriented project: 2-3 persons/project

For development oriented project: 5-10 persons/project

For the time being, however, reserch activities might have tendency of "Study" rather than "Development", so, many project can be treated by allocating a few personnels for each projects. But, at the time of "Development" stage, more concentration of personnels to selected high priority projects might become necessary.

These indices should be revised after obtaining actual experiences. Fig. 4 shows a draft of personnel allocation in R&D division.

In fact, more emphasis should be placed on high priority projects.

Also, total personnel allocation is shown in Fig. 5.

As could be shown in Fig. 1 and Fig. 2, present scheme has extremely biased in Transmission Division. So, a division of transmission division into two divisions, for example, Cable Transmission Division and Wireless Transmission Division may be better or readjustment (reduction) of projects may be necessary.

A draft plan of such division is shown in Fig. 3.

2. Job Description

General job description of each division could be described as as follows:

(1) Research Management Section (Planning and Coordination)

a) Arrangement and coodination of long term and yearly project plan.

b) Arrangement and coordination of project results.

c) General study on the feasibility of local production for each project.

d) Arrangement of personnel request and training plan.

e) Arrangement and coordination of R&D budget.

f) Investigation and planning of building, machinery and equipment including expansion programme.

g) Investigation and planning of R&D management.

h) Preparatory work for "Project Committee" and coordination between T&T and factories.

i) Special order from CTRL Manager.

(2) R&D Section

a) Switching Department
R&D of software and hardware of electronic exchanges, various testing equipment, large capacity power supply units.

b) Transmission Department
R&D of Cable Transmission, Wireless Transmission or PCM Transmission systems and equipment

c) Outside Plant and Subscribers Equipment Department
R&D of cable jointing method, various testing equipment, accessories and subscribers equipment.

(3) Design and Production Department

a) Design and production of circuit components

b) Material testing and calibration of measuring instruments

c) Cooperation for the production of prototypes by various machine tools.

(4) Technical Support Department
(Information management)

a) Library activities (books, journals, reports, etc.)

b) Patent activities

c) Publication, public relations.

d) References of International conferences & international standards.

e) Printing, copying

f) Operations and management of computers (Shift to data Commu.)

(General affairs)

a) Payroll, personnel, budget, welfare.

b) Puchasing and management of commodities, materials and equipment

c) Maintenance and management of building and furnitures

d) Management of laboratory budget.

e) Miscellaneous jobs (cars, cleaning, guard, etc.)

3. Job Evaluation

For the administration of research activities, progress check at certain interval and projects evaluation are indispensable.

In general, we have two kinds of evaluation:

Evaluation by actual results: comparison of actual research cost and actual effect in mass production process after the successful completion of R&D.

Evaluation by estimation: comparison of estimated research cost and estimated effect by supposed completion of R&D.

In former case, evaluation is possible by collection and analysis of actual cost data, but in latter case, many methods are proposed. Some of them are as follows:

(1) Index of return method

A checking method if the estimated research cost will remain within certain range (Index of Return). For example, in case of new products, the estimated research cost should be less than 3% of total sales amount for 5 years. In case of improvement of existing products, the estimated research cost should be less than 2% of total sales amount for 2 years, etc.

(2) Priority ranking method

Low ranked research projects which exceed the budget range are eliminated.

(3) Profile chart method

Evaluation by 5 stages (very good, good, normal, poor,

very proof) for many aspects such as originally, marketability production cost, importability of parts and/or raw materials, exportability of products, demand forecast, availability of production machinery, process know how, etc.

(Ex. of Profile Chart)

	very g	good	normal	poor	very p
Originality					
Marketability					
Production cost					
Importability of parts					

Fig. 1 CTRL Organization (example)

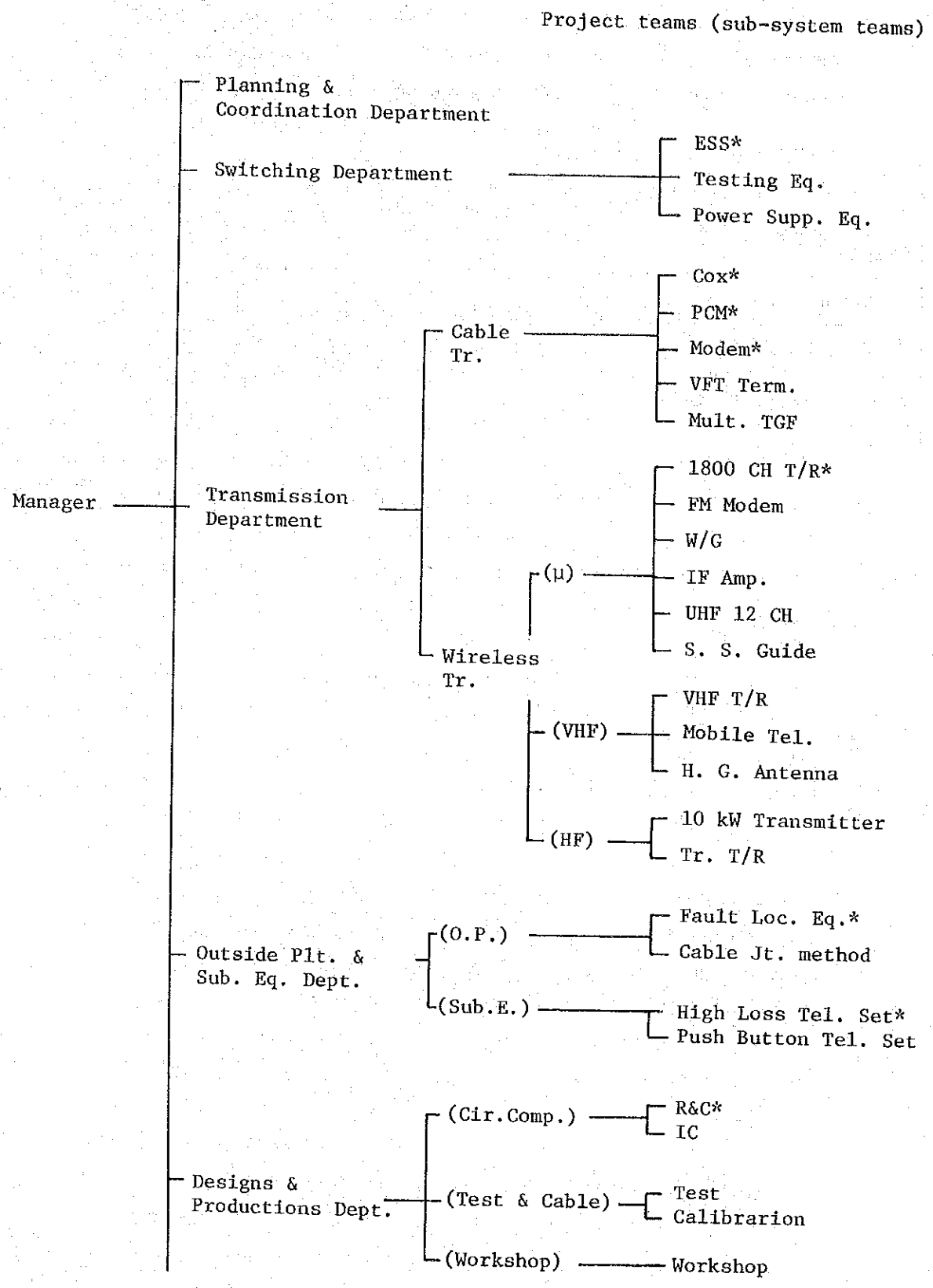

(Fig. 1 continued)

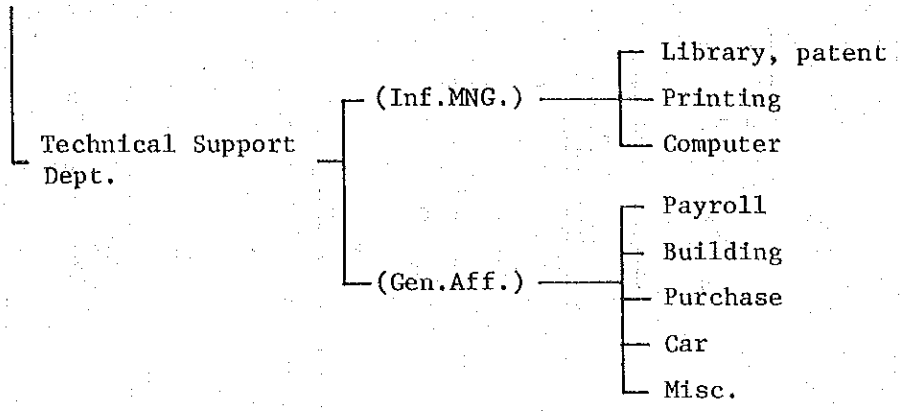

(Note)

1. Only priority I projects (29 projects) are shown as project teams from among 58 projects proposed by T&T.

2. "Outside Plant" and "Subscribers Equipment" were put together as they had little projects and closely related.

3. "Power Supply Unit" was included in "Switching Department" as this department being the major user of power.

4. ( ) shows a "group head" and either he may be an independent person or he may be deputed by Director.

5. "Computer" belongs to "Administration" Department taking account of actual operational activities, but this can be set up as an independent "Data Communication" Department. This was agreed.

6. *shows Japanese experts' high priority projects.

Fig. 2 PROPOSED WORKING RELATIONSHIP OF C. T. R. L.

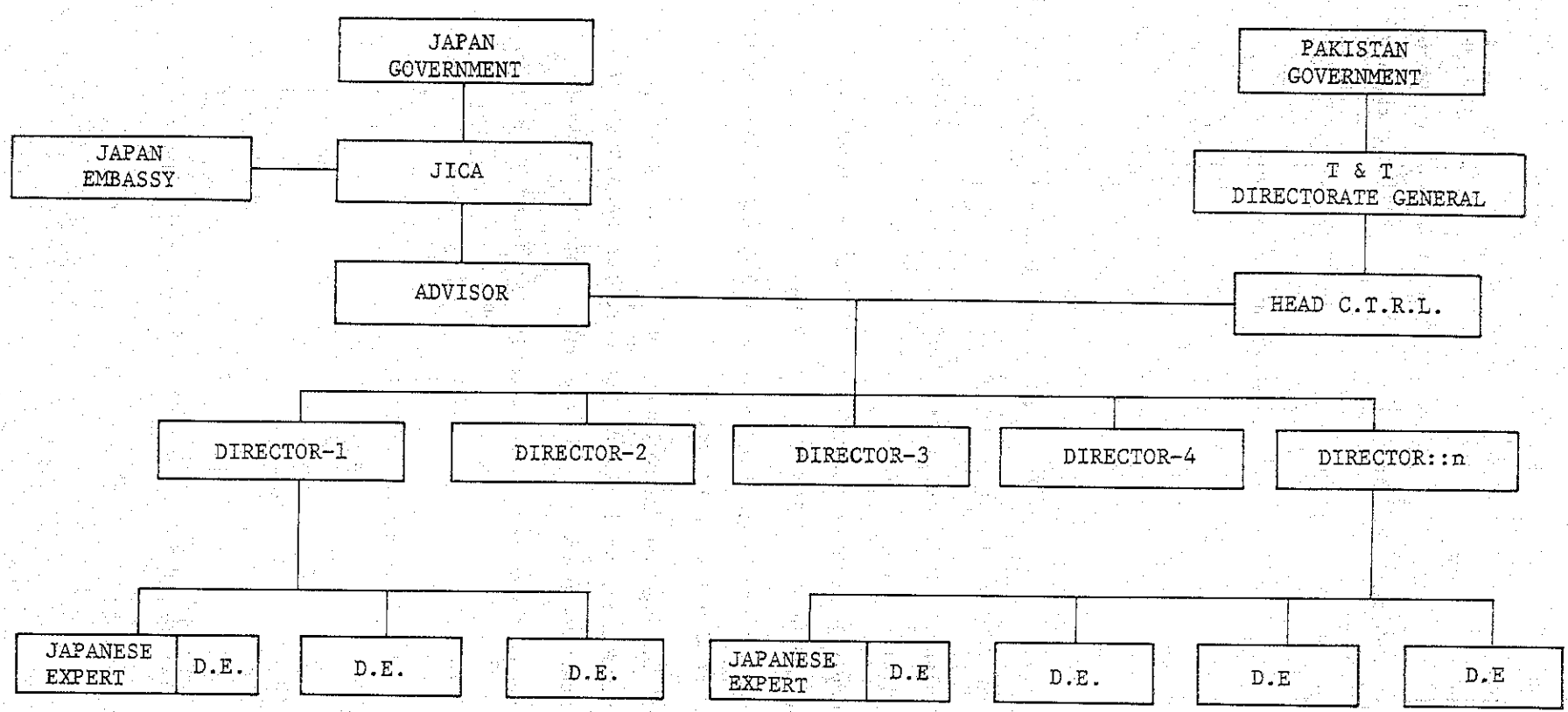

Fig. 3 Division Plan of Transmission Department
(With some adjustment of projects)

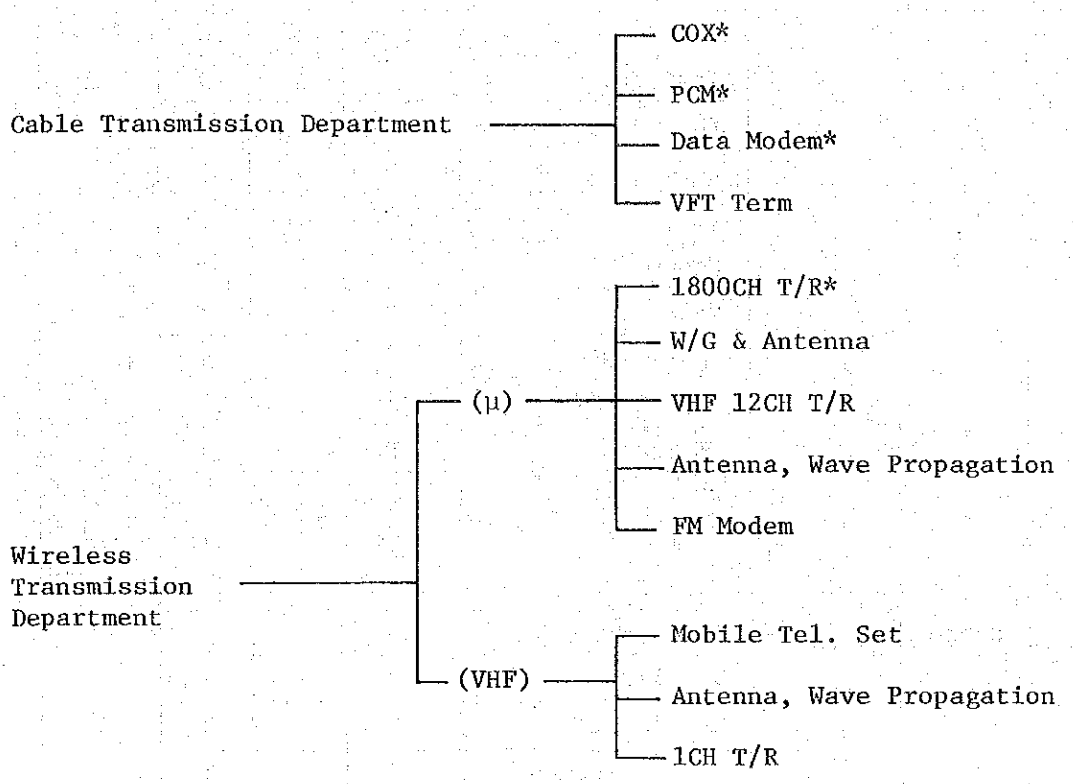

(Note)

1. VFT Term includes Multi TGF.
2. 1800CH T/R includes IF AMP.
3. W/G and Antenna includes Self Support Guide.
4. 1CH T/R includes High Gain Antenna
5. "Antenna, Wave Propagation" projects were added both to μ and VHF groups, as this is essential for the study of radio system design in Pakistan.
6. HF group was omitted as there were too many projects in Wireless Transmission Department. This can be treated in future if necessary.
7. *--- Japanese Expert's high priority project.

Fig. 4 Manpower Estimation for Project Teams

Dept.	Group		Project team	Class	Min	Max	Sub t (min)	Sub t (max)
SW.			ESS	S/D	5	10	12	23
			Test Eq.	D	5	10		
			Pow. Supp. Unit	S/D	2	3		
Tr.	Cable		COX	"	2	3	35	55
			PCM	"	2	3		
			Modem	"	2	3		
			VFT	"	2	3		
			Mult. TGF	"	2	3		
	Radio	(μ)	1800 CH T/R	S/D	5	10		
			FM Modem	D	5	10		
			WG	S/D	2	3		
			IF Amp	"	2	3		
			UHF 12 CH	"	2	3		
			Self Sup. Ant.	"	2	3		
		(VHF)	VHF T/R	"	2	3		
			Mobile Tel.	"	2	3		
			H. G. Antenna	"	2	3		
		(HF)	10 KW X'mittor	"	2	3		
			TR T/R	"	2	3		
OP & Sub. E	OP		Fault Loc. Eq.	S/A	2	3	14	26
			Joint Method	S	2	3		
	Sub. Eq.		High Loss Tel.	D	5	10		
			Push Button Tel.	D	5	10		
Tec. Ass.	Circ. comp.		R, C	PD	5	10	25	50
			IC	"	5	10		
	Test & Clb		Test	"	5	10		
			Calib.	"	5	10		
			Workshop	"	5	10		
Adm.	Inf. Mng.		Computer	"	5	10	5	10
					94	171	91	164

Fig. 5 Total Manpower in CTRL

	Director	Jap. Exp.	Grp. Head	Proj. Loader	Rschr	T.S.A.	Total
Manager	Manager 1					3	4
Gen. Adv.		Gen.Adv. 1				3	4
Pl. & Co. Dept.	1				10	3	14
Sw.Dept.	1	1		3	12	3	20
Tr.Dept.	1	3	4	16	35	3	62
Op. & Sub. Eq.Dept.	1	2	2	4	14	3	27
Design & Production Dept.	1	a	3	5	25	3	38
Tech Support Dept.	1		1 1*	1 7*	5 35*	3	54
Total	7	7+a	11	36	136	24	222

(Note)

1. a : temporary (but counted as 1 in Total)
2. * : clerical staff
3. T.S.A.: Typist, Secretary, Assistant

For precise work of evaluation, accurate setting of purpose (target) and accurate measuring of R&D results are necessary, and it is preferable to have special organization to perform such work.