APPENDIX 2

REQUEST OF ED/NEC

FOR

URGENT REINFORCEMENT

Request of ED/NEC for Urgent Reinforcement
OF
Kathmandu Distribution Line Network

H.M.G.Electricity Department (ED) and Nepal Electricity Corporation (N.E.C.) requested the JICA's basic design team the following identified schemes to be implemented. Target for the urgent implementation of the distribution network is set to meet the power demand in 1985/86 and in the areas covered by K2,Balaju, Teku, New Teku, Maharajgunj and Patan substations principally, which are supplying more than 70 % of the total energy consumption in the Kathmandu Valley.

1. Reinforcement Proposals

1.1 Teku & New Teku Substation areas

a) Interconnection of New Teku and the existing Teku Substations

In order to transmit the power from Kulekhani to the Kathmandu Valley,the new line is required between the two Substations.
The New line consisting of double circuits of 11 KV ACSR 240 mm^2 assuming 15 to 20 MW transmission is planned to be constructed in the right of way of the existing Teku - Thankot feeder.
In Teku substation, two OCB Pannels are required for connecting the double circuits line to the substation.

b) New 11 KV feeders from New Teku Substation.

Four (4) OH 11 KV feeders are required to be newly extended from New Teku Substation to supply the power to Thankot, ropeway, Kirtipur and Soaltee.

No OCB panel for these new feeders is required to be installed, because necessary panels are to be provided in the Kulekhani No 1 Project.

c) New 11 KV feeders to Thapathali area.

Two new feeders are required from Teku Substation directly to Thapathali one of the heavy loading center, on 1.4 Km route. The new feeders will supply approximate 10,000 KVA to Thapathali and reduce the heavy loading duty of the existing ring line by such diverting route.
Two (2) feeder panels are required for the new feeders at Teku substation.

d) Rearrangement of Teku- Kalimati and Teku- Mint feeders

For the stable operation of the Teku- Kalimati and Teku-Mint feeders which are also one of the heavily loaded feeders, the feeder should be reinforced from the current single circuit to double circuits near Teku substation.
For the purpose, two (2) OCB feeder panels and 1,320 m underground cable are required.

1.2. Patan Substation area.

a) Rearrangement of Patan- Patan feeder

For the same effect as the above item 2-1 (d), the feeder should be double near the substation, for which one (1) additional OCB panel, 800 m overhead feeder and 720 m underground cable are required.

b) Interconnection of Patan- Godawari feeder and Patan Pharping Line at Khokana.
There are two (2) new big consumers along the patan pharping line; one (1) is a Cement factory with 1 MW and another is a new drinking water Pumping station with 1 MW. This pumping station is main source of water supply to Patan area. To keep stable supply of power to the station, both feeders should be interconnected. From the interconnecting line, some distribution transformers will supply the power to the unelectrified houses in Bungamati Village. Interconnection line is approximately 3.7. Km long.

1.3 Balaju substation area

Rearrangement of the existing BID (Balaju Industrial District) feeder

The present feeder to BID is common with the power supply to other consumers. BID has been very often shut- down by the fault occured in other areas. To keep the reliable power supply to BID, the supply circuit should be seperated from the lines to other areas, for which a new feeder of 1.5 Km long

is required together with one (1) OCB feeder panel at Balaju substation.

1.4. Maharajgunj Substation area

Rearrangement of the existing Maharajgunj- Kingsway feeder

Demand in 1985/86 of Kingway feedeer is fore casted at 5,500 KVA. The existing feeder from the substation, one (1) circuit for about initial 1.5 Km long should be divided into two (2) routes ~~thereafter~~. The rearrangement is to separate it completely into two (2) circuits directly from the substation.

The rearrangement requires one (1) OCB feeder - Panel and 1.2 Km underground cable as the overhead line construction is difficult.

1.5 Kathmandu (K2) Substation area

a) Upgrading of the existing 2.3. KV or 3.3 KV line to 11 KV

In order to increase the capacity and to reduce energy loss and voltage drop, the existing 2.3 KV and 3.3 KV system should be upgraded to 11 KV.

The upgrading feeders are the stand by diesel feeder, (Mahendra city 2.3 KV) Tangal and Mahabaudha feeders of 8 Km long in total.

b) Replacement of Conductor on K2- Kingsway

The existing conductor (ACSR 0.05 in^2 Cu.eq) should be upgraded by replacement with the bigger size conductors to meet the demand of 5000 KVA expected at 1985/86.

1.6 Addition of Distribution Transformers

In order to meet the growing demand in the areas, approximate 25,000 KVA pole transformers should be added in total. Some poles are to be replaced for these transformers.

1.7. Expansion of New 11 KV line and Replacement of Conductors

New 11 KV overhead lines are proposed to be expanded in the town areas for about 5 Km and in the suberb areas for about 50 Km.
Conductor size will be HAL (Hard- drawn Aluminium) 22 mm^2 or ACSR 19 mm^2.
In some areas, the existing conductors of insufficient current capacity should be replaced by the bigger size conductors. New conductors will be of ACSR 58 mm^2 (Capacity of 240A) and HAL 75 mm^2 or 95 mm^2 (Capacity of 280 to 320 A).

1.8 Rearrangement of Airport and Tangal feeders

In order to keep reliable supply to the international airport, the existing feeder for the airport and Tangal supply, single circuit for the initial 0.5 Km from Chabel S/S Should be modified to double circuit.
Meterials for the rearrangement of two (2) feeder panels 0.1 Km underground cable and 0.5 Km overhead line are necessary.

1.9 Lainchour and Thapathali Switching Station

Two (2) intermediate Switching stations are proposed to be established on K2- Balaju line and K2- Patan line respectively, in order to operate and maintain systematically the congested network and to lighten the existing ring line from the heavy load which is going to produce excessive voltage drop and energy loss.

1.10 400/230 Volts Low- tension networks:

In order to electrify the new houses in city and suberb areas low tension distribution lines are proposed.

1.11 Maintenance tools

In order to carry out better maintenance of the power system network some maintenance equipments and tools are proposed as per the attached appendix IV.

1.12 The JICA Team surveyed the site along the above mentioned areas jointly with the engineers of ED & NEC from 22nd May to 17th June 1980. The estimated work quantities are detailed with proposed priority in appendix I. Summery of the request for the urgent implementation is as below.

a) 11 KV new extension lines (town area)	43.1 Km
b.)11 KV new extension lines (suburb area)	50.5.Km
c) 11 KV conductor upgrading	26.2 Km
d) Voltage upgrading from 2.3 KV & 3.3 KV to 11KV	10.2 Km
e) Pole mounted transformers	25,600 KVA 245 locations
f) New switching stations	2 Locations
g) New low tension lines	186.3 Km

2) Works to be provided by (E.D.) & N.E.C.

a) Shut- down on some feeders is required during construction of new lines, conductor upgrading, transformer addition, voltage upgrading etc.
ED/ NEC will give daytime shut-down in accordance with the construction schedule.

b) Before commencement of the site works, ED/NEC will settle the anticipated problems regrading the right of way.

c) Works for connection of incoming and outgoing line to new switching station shall be carried out by ED/NEC including the shift of the existing panels for rearrangement.

d) All erection works of 400/230 V low tension lines, including connection to transformers and consumers will be carried out by ED/NEC out of the fund made available under the grant.

e) Existing conductors and pole-mounted transforers removed from the existing lines may be re-used as a part of those low tension materials and equipment, as much as possible.

3) Project Benefit

a) Capacity of the network will be increased from the present 50 MVA to 78 MVA by the extension of the network with a additional transformers.

b) New consumers of approximate 20,000 will be electrified by the extension of 11 KV network.

c) Average Voltage drop recorded at more than 20 % will be remarkably improved.

d) Energy loss recorded at approximate 30% will be much reduced by reinforcement of the network.

e) Shut-down by line fault of supply to consumers will be decreased by dividing the existing common feeders into the individual feeders.

4) Completion Target

All the proposed construction works are proposed to be completed in time of the commissioning of the Kulekhani Hydro Power Station.

5) Technical Information and Design Criteria.

The technical matters and basic design criteria, as discussed between E.D,N.E.C. and the Survery team are given in appendix II

6) Data given to the team by E.D. & N.E.C. are included in appendix III.

Signed

(S.K.Malla)
Executive Chairman
Nepal Electricity Corporation.

(B.M.Singh)
Dy.Chief Engineer,
H.M.G.Electricity Dept.

APPENDIX-1 ~~TABLE-1~~ ESTIMATED QUANTITIES

WORK ITEMS		OVERHEAD LINE		UNDERGROUND CABLE		3φ POLE TRANSFORMERS (PCS)						OCB PANEL (SETS)	APPROX. Q'TY OF POLE	WORK PRIORITY
		CONDUCTOR & DISTANCE (KM)	CIRCUIT	SIZE & DISTANCE (KM)	CIRCUIT	10KVA	25KVA	50KVA	100KVA	150KVA	250KVA			
TEKU S/S	Interconnection of Teku and New Teku	3.00	2	0.1	2	–	–	–	–	–	–	2	38	A
NEW TEKU S/S	New 11KV feeder from New Teku	3.25	4	–	–	–	–	–	17	–	5	–	52	A
TEKU S/S	New 11KV feeder to Thapathali	1.43	2	0.2	2							2	14	A
"	Rearrangement of Teku-Kalimati	0.17	1	1.13	1				2		4	2	6	A
"	Rearrangement of Teku-Mint	0.82	1	0.20	1						5		22	A
PATAN S/S	Rearrangement of Patan-Patan	0.80	1	0.72	1				5		5		29	A
"	Interconnection of Patan-Phanping-Godawari	3.76	1										40	A
BALAJU S/S	Rearrangement of B1D feeder	1.11	1	0.46	1							1	13	A
M'SUNJ S/S	Rearrangement of Kingsway			1.20	1				4		5	1	–	A
K2 S/S	Upgrading of 2.3KV, 3.3KV to 11KV			4.69	2				2		20	1	–	A
"	Upgrading of Kingsway conductor	0.09	1								6		–	A
"	Upgrading of Tangal 3.3KV to 11KV	3.01	1	0.44	1				8		9		–	A
CHABEL S/S	Rearrangement of Airport & Tangal	0.50	2	0.10	1				9		15	2	4	A
NEW LINE EXTENSION (11KV) IN PATAN TOWN														
	Dhobighat								1				1	C

APPENDIX-1 ~~TABLE-1~~ ESTIMATED QUANTITIES

WORK ITEMS	OVERHEAD LINE		UNDERGROUND CABLE		3Φ POLE TRANSFORMERS (PCS)						OCB PANEL (SETS)	APPROX. Q'TY OF POLE	WORK PRIORITY
	CONDUCTOR & DISTANCE (KM)	CIRCUIT	SIZE & DISTANCE (KM)	CIRCUIT	10KVA	25KVA	50KVA	100KVA	150KVA	250KVA			
Kopundole, Sanepa & Santabhawan	1.33	1						4				25	C
Chyasel 3.3KV to 11KV	0.12	1						1				4	C
Talsikhel & Menbhawan	0.30	1						2				7	C
Pinchhe Tole	0.12	1						1				4	C
Chakpat	0.19	1						1				4	C
Satdobato	0.08	1						1				3	C
St. Merry School	0.15	1						1				4	C
NEW 11KV LINE EXTENSION IN KATHMANDU TOWN													
Baneswor Heights	0.15	1						1				4	C
Battis Putali West	0.24	1						1				7	C
Battis Putali East	0.18	1						1				6	C
Dhobidhara	0.17	1						1				6	C
Behind Babar Mahal	0.38	1						1				8	C
Behind Stadium	0.03	1						1				1	C
Chhouni	0.11	1						1				4	C

APPENDIX-1 ~~TABLE 1~~ ESTIMATED QUANTITIES

WORK ITEMS	OVERHEAD LINE		UNDERGROUND CABLE		3Φ POLE TRANSFORMERS (PCS)						OCB PANEL (SETS)	APPROX. Q'TY OF POLE	WORK PRIORITY
	CONDUCTOR & DISTANCE (KM)	CIRCUIT	SIZE & DISTANCE (KM)	CIRCUIT	10KVA	25KVA	50KVA	100KVA	150KVA	250KVA			
Sunargaon								1				1	C
Maligaon	0.15	1						1				4	C
Dhumbarahi	0.31	1						1				4	C
Lamtangin & Tusal	0.97	1						3				19	C
Basundharadole	0.12	1						1				3	C
Kotesuar								1				1	C
Behind Prime Minister's	0.15	1						1				5	C
NEW 11KV LINE EXTENSION IN PATAN SUBURB													
Jharuarasi	3.52	1				5						30	C
Dhapakhel	0.57	1				3						9	C
Bisankhu Narayan	1.25	1				1	1					24	C
Lamatar	6.49	1			1	5	2					66	D
Lele	1.38	1				1						14	D
Bungamati 7 & 8	(low tension line only)												D
NEW 11KV LINE EXTENSION IN KATHMANDU SUBURB													

APPENDIX - 1 ~~TABLE 1~~ ESTIMATED QUANTITIES

WORK ITEMS	OVERHEAD LINE		UNDERGROUND CABLE		3Φ POLE TRANSFORMERS (PCS)						OCB PANEL (SET.)	APPROX. Q'TY OF POLE	WORK PRIORITY
	CONDUCTOR & DISTANCE (KM)	CIRCUIT	SIZE & DISTANCE (KM)	CIRCUIT	10KVA	25KVA	50KVA	100KVA	150KVA	250KVA			
Pharping Southel	1.07	1				2						14	C
Satikhel	2.40	1				3						25	C
Sitapaila	1.07	1				7						17	C
Gothatar	1.72	1				3						15	C
Dhapasi (Basundhara)	2.10	1			4	1						21	C
Chapali Bhadrakali	1.85	1				2						16	C
Indrayani (Chabel)	0.95	1				4						12	C
Mulpani	1.00	1				3						10	C
Mahankal	2.42	1				2	1					25	C
Alapoth & Bhadrabas	1.57	1				3	1					21	C
Chovar	1.52	1				1	1					16	D
Gokarneswor	1.84	1				2						18	D
Shyachatar	1.76	1				4						20	D
Mana Maiji	1.03	1				3						8	D
Phutung Chour	1.76	1					2					16	D

APPENDIX-1 ~~TABLE-1~~ ESTIMATED QUANTITIES

WORK ITEMS		OVERHEAD LINE		UNDERGROUND CABLE		3Φ POLE TRANSFORMER (PCS)						OCB PANEL (UNITS)	APPROX. CITY OF POLE	WORK PRIORITY
		CONDUCTOR & DISTANCE (KM)	CIRCUIT	SIZE & DISTANCE (KM)	CIRCUIT	10KVA	25KVA	50KVA	100KVA	150KVA	250KVA			
	Goldhunga	6.40	1				10						57	D
	Jorepati	0.94	1				3						14	D
	Rankot Darapowa	2.26	1				6						29	D
	Bhimdhunga	1.60	1				3						17	D
	Purano Naikap	1.90	1				4						24	D
	Koteswar	0.08	1				1						1	D
UPGRADING OF CONDUCTOR SIZE														
TEKU AREA	Kalimati Petrol station	0.47	1											A
"	Tripureswar - Dhanahara	2.29	1											A
K2 AREA	Naxal - Bhagawatistan	0.52	1											A
	Baneswar 3.3KV to 11KV	2.34	1											A
	Naxal - chabel	2.04	1											A
	Gaushala - Harijentole	1.11	1											A
	Gaushala - chabel	0.97	1											A
	Palace South Gate - Bunamaharani	2.13	1											A

APPENDIX-1 ~~TABLE 1~~ ESTIMATED QUANTITIES

WORK ITEMS		OVERHEAD LINE		UNDERGROUND CABLE		3Φ POLE TRANSFORMERS (PCT)						OCB PANEL (NETT)	APPROX. Q'TY OF POLE	WORK PRIORITY
		CONDUCTOR & DISTANCE (KM)	CIRCUIT	SIZE & DISTANCE (KM)	CIRCUIT	10KVA	25KVA	50KVA	100KVA	150KVA	250KVA			
"	Hatisar - Police H.Q	0.52	1											A
"	Dillibazar - Naxal	1.26	1											A
"	Bunamahorani - Hatisar	1.02	1											A
PATAN AREA	Sontabhawan - Pinchhen	1.14	1											A
"	Sontabhawan - Pulchok	2.95	1											A
"	Sainbu Bhainsepati - Phanping	5.00	1										UPGRADING OF CONDUCTOR	A
M'GUNI AREA	Kingsway	3.66	1										90	A
LAINCHOUR SW. S												11		B
THAPATALI SW. S												10		A
11KV TOTAL		115.74 cct-km		14.23 cct-km		5	83	8	75	-	74	32	972	
						28.025 KVA								
(BREAKDOWN)														
	NEW EXT. (TOWN)	33.66 cct-km		9.54 cct-km		SHIFTING OF TR. REPLACED								
	" (SUBURB)	50.45 "		-		(-1)	(-16)	(-8)	(-21)					
	CONDUCTOR UPGRADE	26.16 "		-		NEW REQUIREMENT								
	VOLTAGE UPGRADE	5.47 "		4.69 cct-km		4	67	-	54	-	74			
						25.615 KVA								
NEW EXTENSION OF 400/230V LT. LINE		186.3												E

Appendix II- Technical Information & Design Criteria

Japanese standards will be principally applied to all materials and equipments. However, standards equivalent to Japanese standard might also be applied.

1. Technical Information:

a) Meteorological Data from 1921 to present

Data recorded at Kathmandu airport are as below :-

Maximum average air temperature	25.2° C
Extremely highest air temperature	27.8°C
Minimum average air temperature	11.7°C
Extremely lowest air temperature	-3.9°C
Extremely highest wind velocity	52 Knot = 26.77 m/s.

b) Soil Geological Data

Test results along 66 KV new transmission line between New Teku and Patan substation will be referred.

c) Existing concrete poles and steel tubular poles are capable to support bigger size conductors installation.

d) In case of replacement of the existing conductors to bigger size conductors most of the existing cross- arms and insulators are considered not to be replaced with new ones.

e) All conductors on the existing overhead line are bare ACSR and copper. In this connection overhead conductors on the upgrading and new expansion lines will also be bare ACSR and HAL.

f) Annual and monthly load factors are recorded as 43 to 44 % and 55 to 56 % respectively. Power factor in the valley is 90 %.

g) Compensation for excessive voltage drop due to inductive loading shall be studied and incorporated wherever necessary.

2. Design Criteria:

a) Wind pressure and Temperature.

The recorded extremely highest wind velocity was 52 Knot. Considering the design practice based on B.S. applied in Nepal design wind velocity is assumed at 50 Knots equivalent to 25 m/s. The design wind pressure

on conductors and pole shall be taken as 31 kg/m^2 on the projected area. For conductor sag calculation conductor maximum temperature is assumed at 70°C taking account of maximum air Temperature and conductor temperature rise due to current flow.
While, minimum conductor temperature is assumed at 0°C taking account of no current flow and no case of simultaneous occurrence of max. wind velocity (April) and extremely lowest air temperature (January).

b) Support:

i) Considering local conditions,
Maximum span length for this project is assumed as 150 M, if applicable.

ii) Standard ground clearances of conductors are as below :-

	11 KV	400/230V
Road crossing	20 feet (6 m)	
By Road	19 feet (5.8m)	16 feet (4.8 m)
Others	17 feet (5 m)	

iii) Standard conductor spacing of 11 KV line is 75 cm.

iv) Safety factor will be 2.5 to ultimate strength for support and its foundation.

c) Conductors:

i) From the viewpoint of importance of line, overhead groundwire will be installed only on the 11 KV line between Teku and New Teku substations.

ii) Underground cables should be laid at more than 70 cm below ground surface in accordance with the Nepali practice. Cables will be directly buried in the ground with suitable protections for the traffic load.

iii) Safety factor should be more than 2.5 for aluminium overhead conductors and 2.2 for galvanized stell wires to their ultimate breaking strength.

d) Insulations:

i) Pin type and suspension type insulators for 11 KV line should be of porcelain and glazed brown colour.

ii) Suspension type insulator disc will be of clevis- tongue.

iii) Mechanical factor of safety of insulators should be more the 2.5.

iv) One(1) 10 " suspension type insulator per phase will be used at every heavy angle and dead- end support. But in case of metalled road with heavy traffic crossiong double insulators shall be provided at every heavy angle pole.

e) Transformers:

i) Transformers will be of three phase oil immersed outdoor- use and pole- mounted type.

*ii) Voltage tap range of transformers shall be suitable for variation of primary voltage from + 5 to - 10 % of nominal 11 KV with 2½ % steps to give 400/230 Volts secondary.

iii) Vector group of transformers shall be D Y 11.

*iv) For every transformer outdoor L.T. distribution box with L.T. fuses shall be provided.

*v) L.T. side of the transformer shall be cable ended type

(* Subject to the ammendment if needed.)

Appendix III- List of Data Supplied

1. Meteorological data
2. Daily load curve of 11 KV ring substation and feeders.
3. Maximum load demand of feeders.
4. Load growth study and 10 year generation plan.
5. Distribution system Diagrams of 11 KV. 3.3 and 2.3 KV feeders.
6. Maps of Kathmandu City.
7. Detail Schemes for networks extensions in suberb areas.
8. Detail schemes for reinforcement proposals.
9. Annual Reports.
10. List of technical man power of N.E.C.

Appendix IV

Requirements of tools & equipments for Maintenance of the Power System networks

Maintenance tools are required for carrying out the reintorcement works programme and the list a re given as follows:

1.	Line Stringing tools	1 lot
2.	Mobile Cable laying equipment with excavator, drum roller and Carrier	2 sets
3.	Mobile O/H line maintenance equipment with ladders, necessary tools, pulling winch vice etc.	2 sets
4.	A suitable crane for transportation and installation of distribution transformer upto 250 KVA with spare parts.	1 set
5.	Hydraulic Crimping tools for conductor Jointing and cable termination complete with die and hydraulic cutter.	2 sets
6.	Temporary anchor Stays.	6 nos
7.	Cable fault detector & maintenance tools.	3 sets
8.	Transformer maintenance equipments as follows	2 sets
8.1	Oil filter set	
8.2	Oil testing set	
8.3	Megger 2000 Volts	
9.	Meter testing sets	1 set
10.	Tong Tester upto 1000 A (upto 11 KV)	10 Nos
11.	Transformer Testing equipment for Testing copper loss, no load loss, KVA rating and efficiency of the transformers	1 set
12.	Diesel Pick ups	2 nos
13.	Diesel Jeeps	4 nos.

APPENDIX 3

INLAND TRANSPORTATION

1. The materials and equipment will be landed at Calcutta port in India.

2. There is a railway from Calcutta to Raxaul at the border of India and Nepal. However, the railway consists of broad and narrow gauges roads; broad gauge between Calcutta and Muzaffarpur and narrow gauge between Muzaffarpur and Raxaul. Accordingly, the transshipment of cargoes should be required at Muzaffarpur.

   Taking account of such troublesome transshipment of cargoes at the railway stations of the port, Muzaffarpur and Raxaul, the most of cargoes to Nepal is transported by lorrys or trailors.

3. The imported materials and equipment cleared at the custom office of Calcutta are transported by lorrys or trailors by about 800 km road to Raxaul.

   The cargoes inspected at Raxaul custom office by Indian Government are imported in Nepal and cleared at Birganj custom office by Nepal Government. Then, the cargoes are transported by lorrys or trailors to Kathmandu.

4. The traffic road between Birganj and Kathmandu, about 190 km long, is zigzagged in the 2,000 m high mountains between Hetauda and Kathmandu.

   There are many bridges between Calcutta and Kathmandu. Although the allowable load capacity of bridges in India is reported as 60 tons, that in Nepal is limited to 15 tons with the maximum cargo length of 7 m in accordance with the informations of Department of Road, Nepal.

   Outline of the road is as shown in the attached sheet. Main bridges on the road in Nepal are outlined as follows;
   (No. of bridges are referred to the attached sheet.)

Bridge No.	Type of Bridge	Length (m)	Width (m)
1	semi through truss	25	3.5
2	steel truss	12	3.5
3	"	15	3.5
4	"	12	3.5
5	"	13	3.5
6	"	24	3.5
7	channel girder	7	4.0
8	steel truss	15	4.0
9	"	30	4.5
10	"	60	4.5
11	concrete girder	5	4.5
12	steel truss	8	4.5
13	"	80	4.5
14	"	90	4.5
15	"	60	4.5
16	concrete girder	60	4.5
17	steel truss	60	4.5
18	"	60	4.5

5. Assuming no delay due to the troubles from custom clearance, transshipment, strike of labour union, it takes about 40 days to transport cargoes from Calcutta to Kathmandu.

unloading at Calcutta port	:	7 days
custom clearance at Calcutta port	:	5 "
transportation between Calcutta and Raxaul	:	10 "
transportation between Raxaul and Kathmandu	:	17 "
		39 days

(*) including custom clearances at Raxaul and Birganj.

OUTLINE OF MAIN ROAD
(BIRGANJ — KATHMANDU)

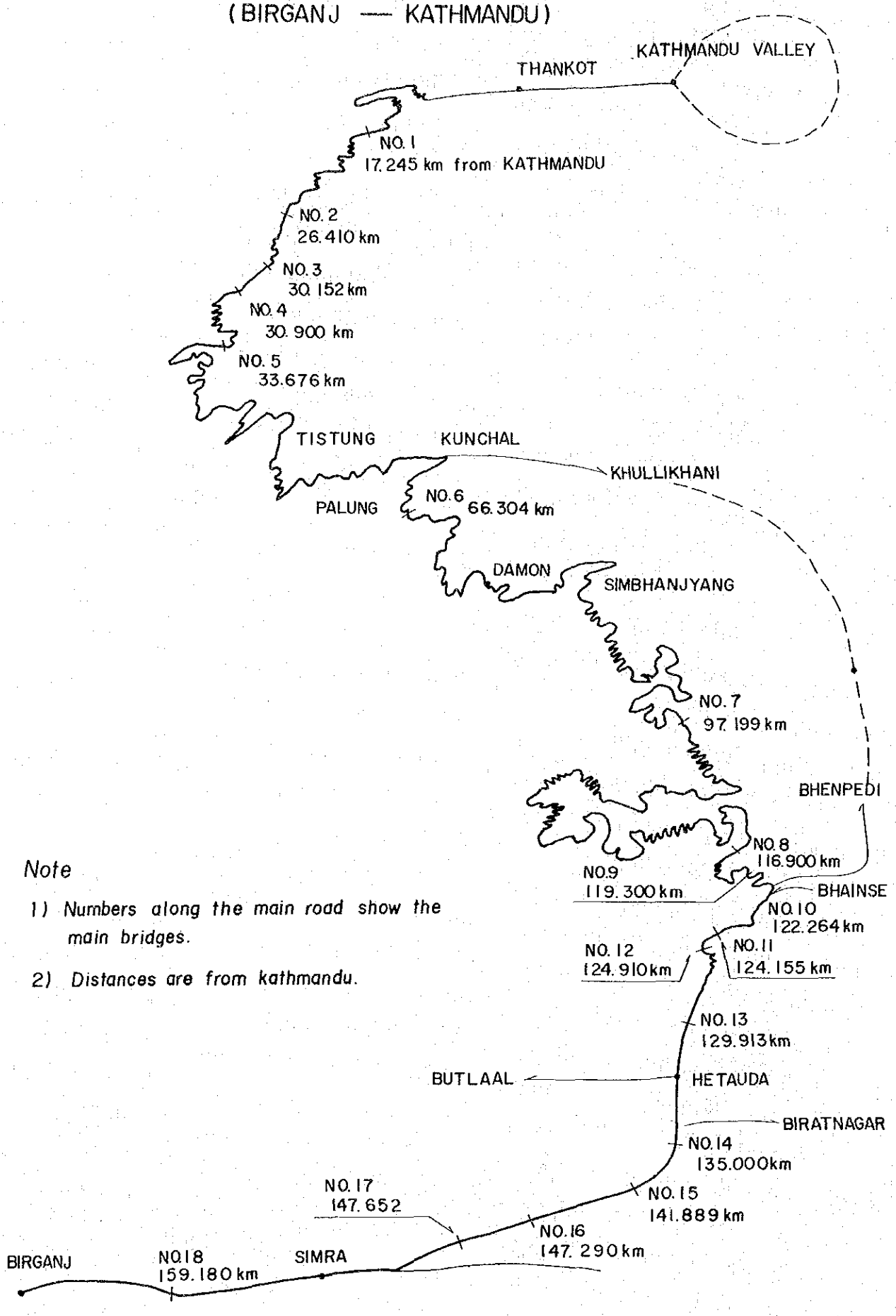

Note

1) *Numbers along the main road show the main bridges.*

2) *Distances are from kathmandu.*

APPENDIX 4

PRESENT POWER TARIFF
AND
REVENUE/EXPENDITURE
OF
NEC

Present Power Tariff

	Present	Previous
Domestic		
(1) up to 25 kWh	25 Paisa/kWh	25 Paisa/kWh
(2) " 100 kWh	40 "	35 "
(3) " 300 kWh	55 "	42 "
(4) above 300 kWh	70 "	50 "
(Minimum charge)		
(1) up to 15 A meter	6.25 Rs/month, 22 kWh free	6.25 Rs/month, 22 kWh free
(2) 16 to 30 A meter	16.25 " , 50 "	15.00 " , 45 "
(3) 31 to 60 A meter	36.25 " , 100 "	32.50 " , 90 "
(4) 61 to 100 A meter	63.75 " , 150 "	53.50 " , 135 "
(5) above 100 A meter	146.25 " , 300 "	116.50 " , 270 "
Industry		
(1) up to 100 kW		
- demand charge	12.00 Rs/kW/month	8.50 Rs/kW/month
- unit charge	36 Paisa/kWh	25 Paisa/kWh
(2) above 100 kW		
- demand charge	30.00 Rs/kW/month	17.15 Rs/kW/month
- unit charge	30 Paisa/kWh	20 Paisa/kWh
Commercial		
- demand charge	30.00 Rs/kW/month	18.00 Rs/kW/month
- unit charge	41 Paisa/kWh	20 Paisa/kWh
Street Light		
(1) metered	35 Paisa/kWh	25 Paisa/kWh
(2) unmetered	14 Paisa/W/month	10 Paisa/W/month
Irrigation & Water supply		
- demand charge	25.00 Rs/kW/month	-
- unit charge	25 Paisa/kWh	-
Transportation		
- demand charge	25.00 Rs/kW/month	18.00 Rs/kW/month
- unit charge	30 Paisa/kWh	25 Paisa/kWh
Temporary Connection		
(1) metered	100 Paisa/kWh	75 Paisa/kWh
(2) unmetered	45 Paisa/W/month	35 Paisa/W/month

Reference: US$1.00 = Rs.11.90

Revenue and Expenditure of NEC

(x 10^3 Rs)

	Net Revenue	Expenditure	Balance
1968/69	6,401	5,247	1,154
69/70	7,811	7,676	135
70/71	8,613	8,138	475
71/72	9,629	8,770	859
72/73	12,130	10,620	1,510
73/74	15,812	14,900	912
74/75	18,610	25,887	-7,277
75/76	23,114	32,233	-9,119
76/77	35,979	25,135	10,844
77/78	40,954	39,381	1,573
78/79	49,297	55,812	-6,515
79/80 (*)	59,464	45,850	13,614

Note: (*) Those figures are estimated by NEC as of June 1, 1980.

MAPS AND DRAWINGS

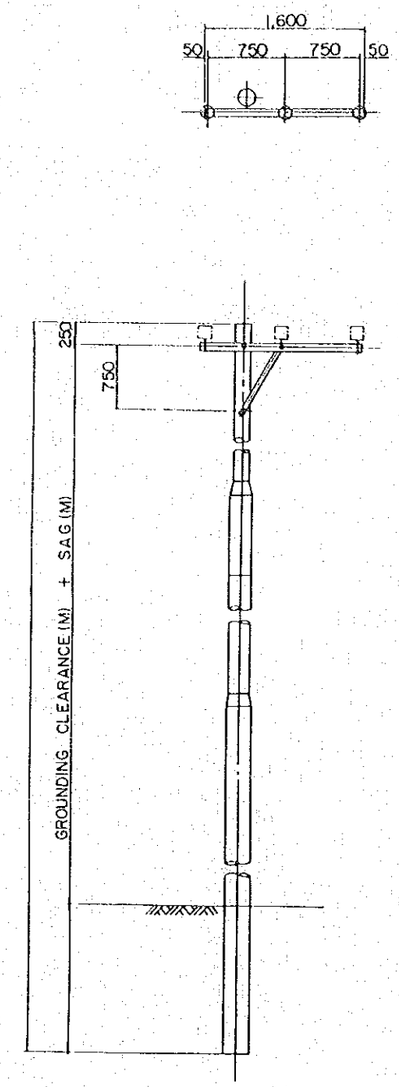

A - TYPE

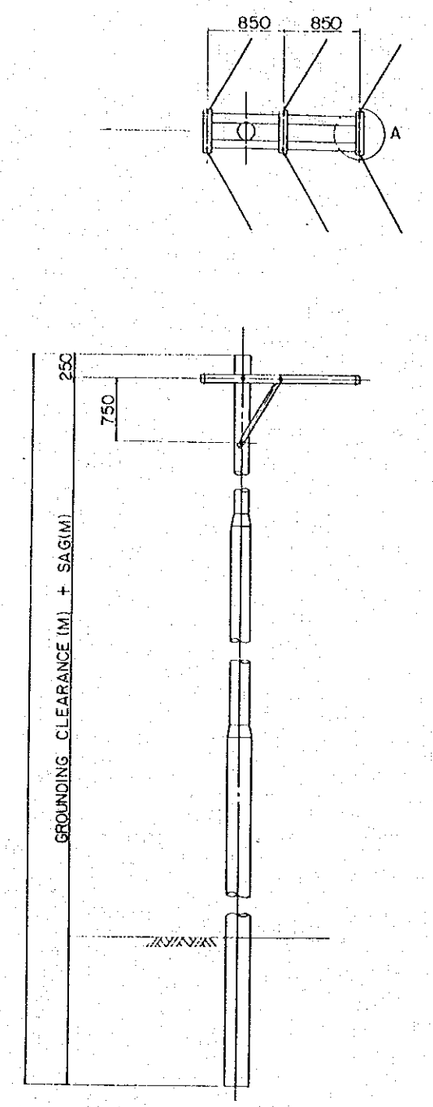

B & C - TYPE

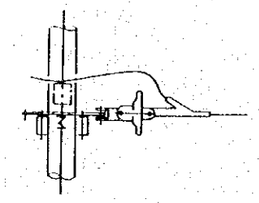

DETAIL-A

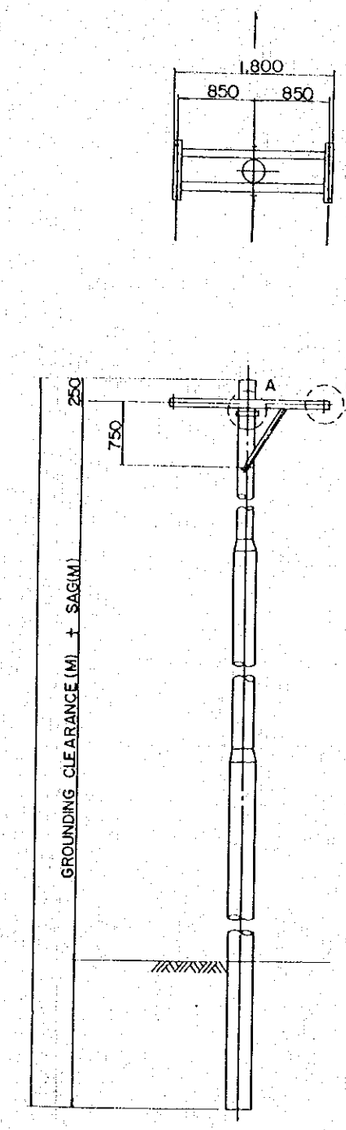

D-TYPE

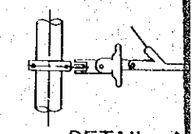

DETAIL - A

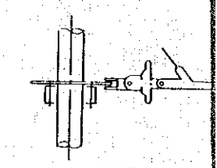

DETAIL - B

KATHMANDU VALLEY DISTRIBUTION NETWORK PROJECT	11 KV SINGLE CIRCUIT TYPE-A,B,C,& D, POLE
HIS MAJESTY'S GOVERNMENT OF NEPAL	DWG.NO KR - 01

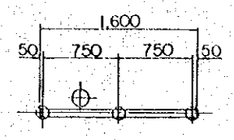

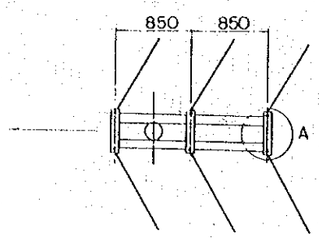

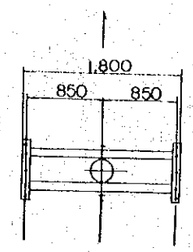

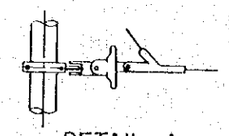

DETAIL-A

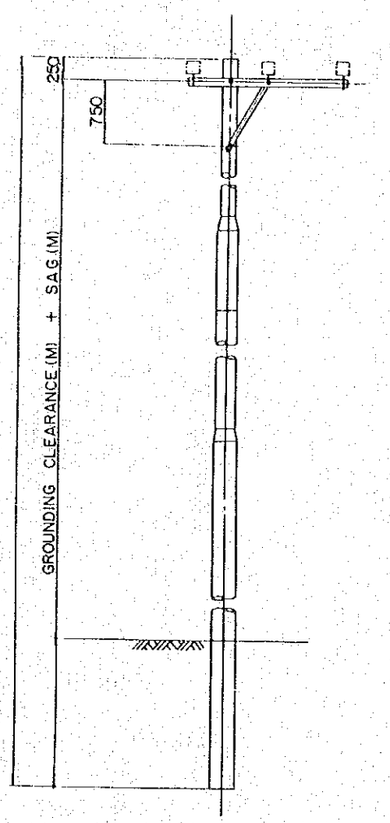

A-TYPE

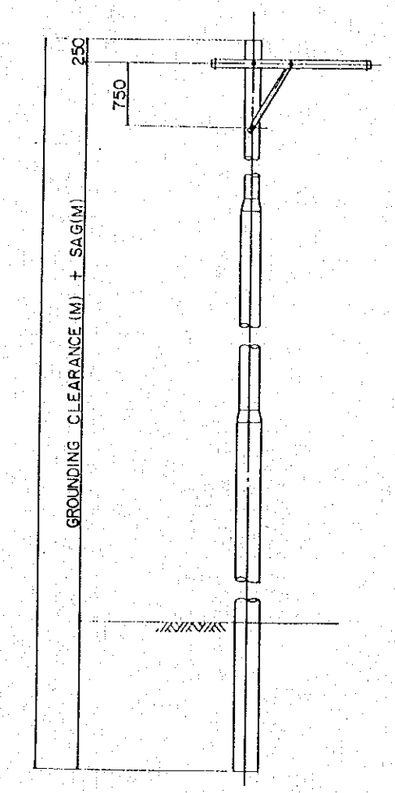

B & C-TYPE

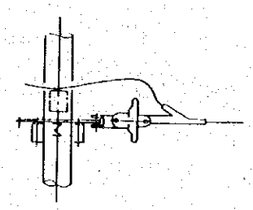

DETAIL-A

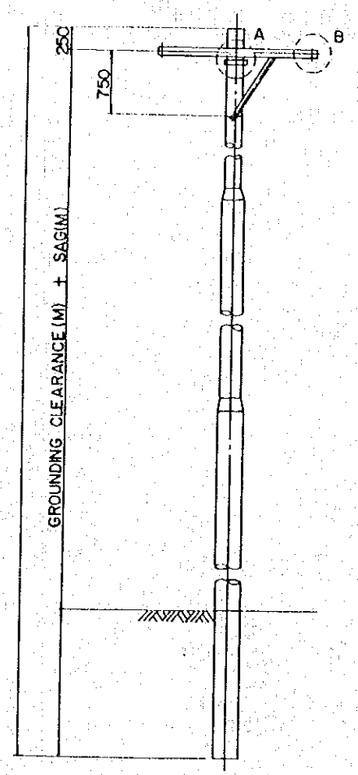

D-TYPE

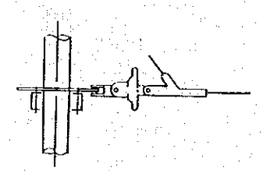

DETAIL-B

KATHMANDU VALLEY DISTRIBUTION NETWORK PROJECT	11 KV SINGLE CIRCUIT TYPE-A,B,C,& D, POLE	DESIGN / DATE / CHECKED / APPROVED
HIS MAJESTY'S GOVERNMENT OF NEPAL	DWG.NO KR-01	JAPAN INTERNATIONAL COOPERATION AGENCY

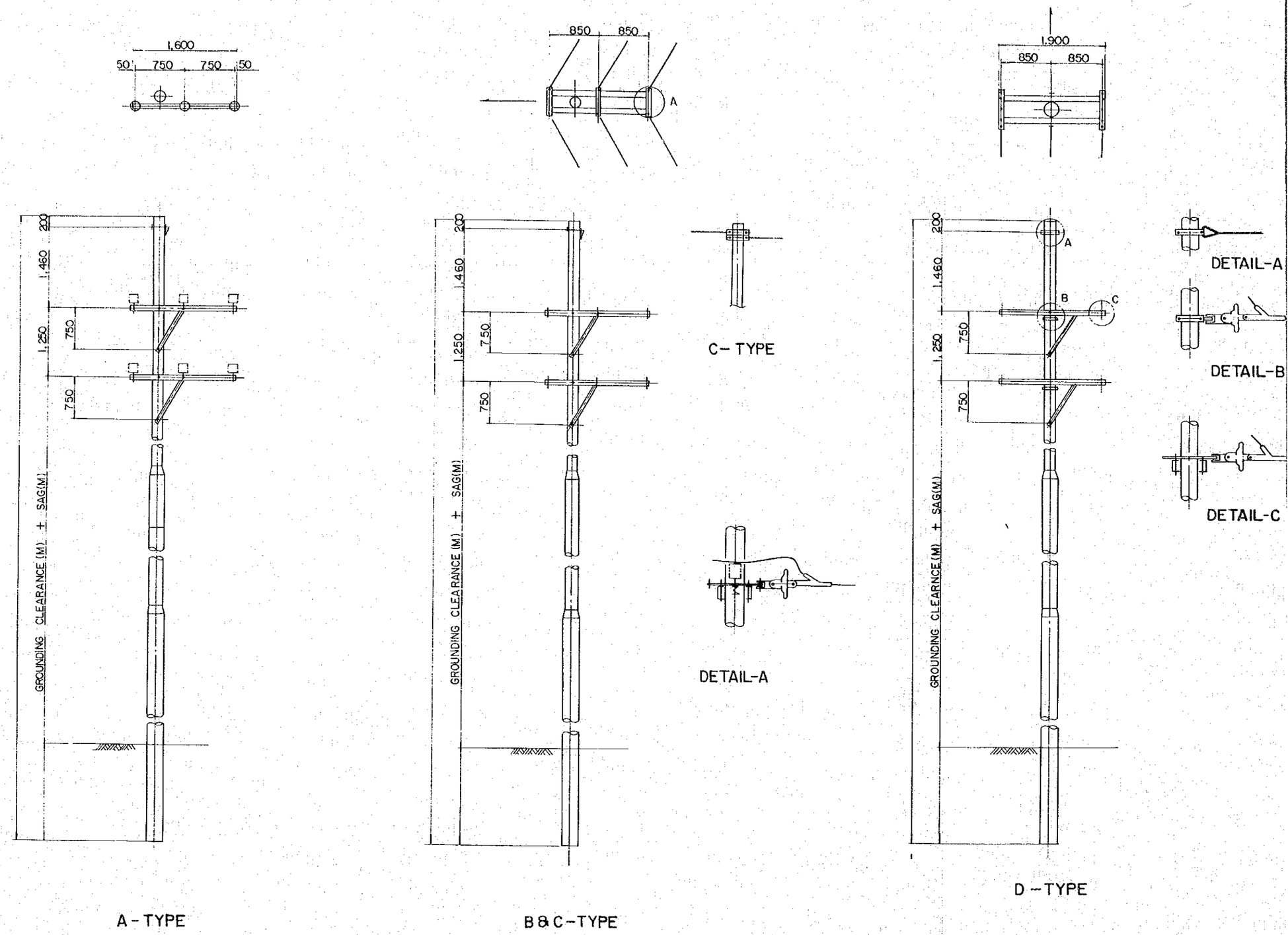

KATHMANDU VALLEY DISTRIBUTION NETWORK PROJECT	11KV DOUBLE CIR TYPE-A,B,C,&D, PO
HIS MAJESTY'S GOVERNMENT OF NEPAL	DWG.NO KR – 02

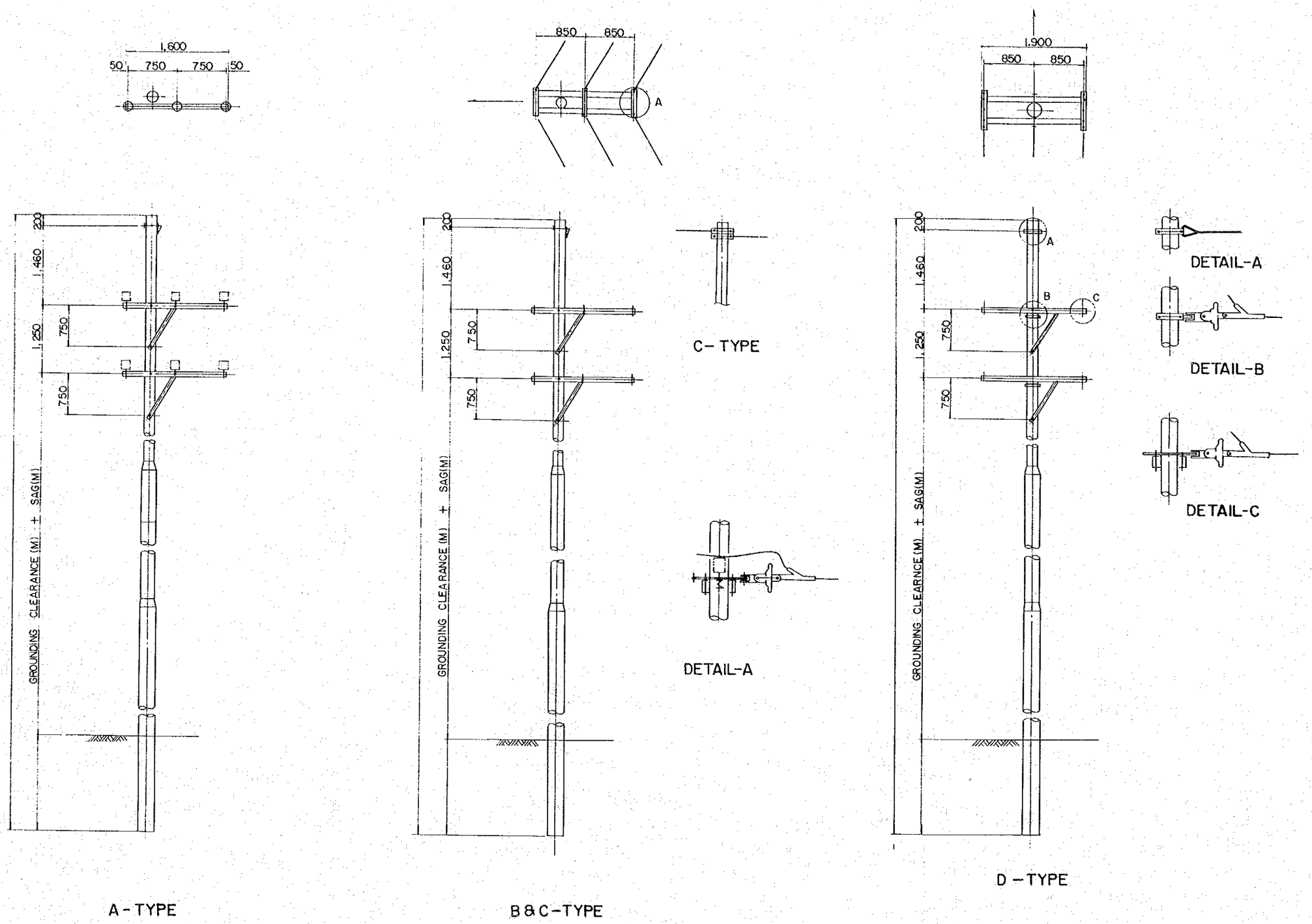

KATHMANDU VALLEY DISTRIBUTION NETWORK PROJECT	11KV DOUBLE CIRCUIT TYPE-A,B,C,&D, POLE	DESIGN DATE CHECKED APPROVED
HIS MAJESTY'S GOVERNMENT OF NEPAL	DWG. NO KR – 02	JAPAN INTERNATIONAL COOPERATION AGENCY

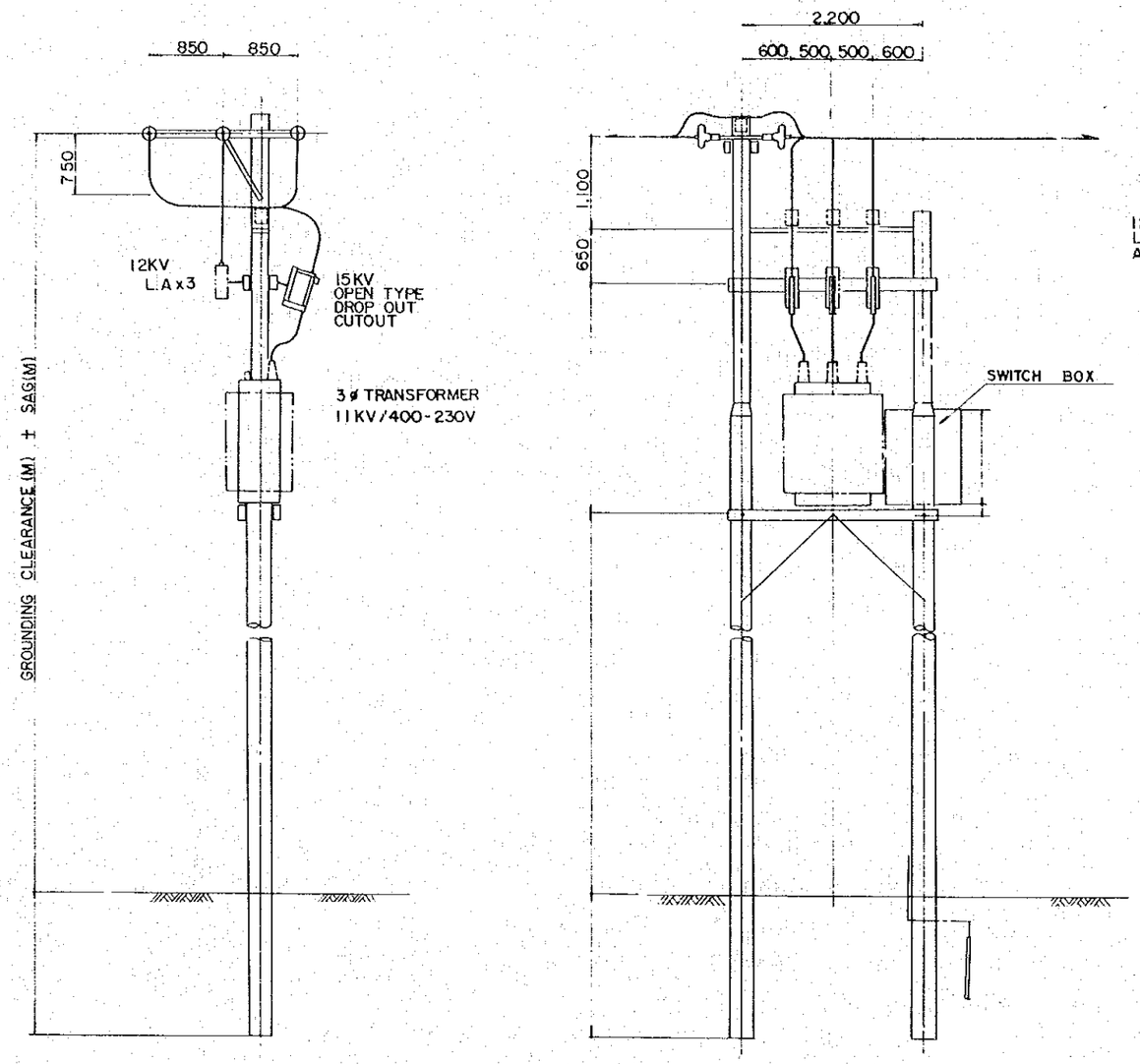

TRANSFORMER POLE (T-TYPE)

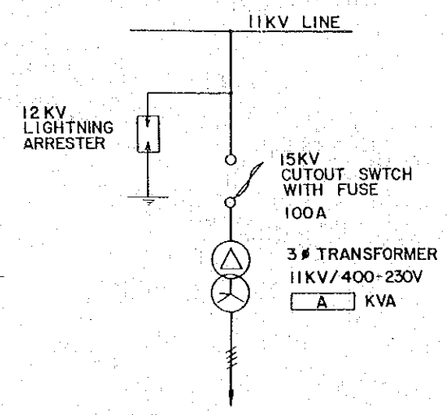

SKELETON DIAGRAM

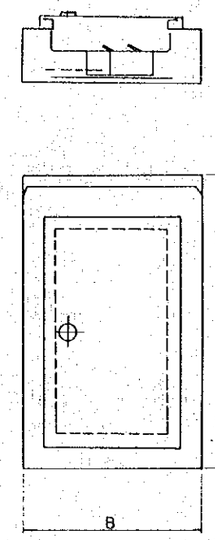

SWITCH BO

CAPACITY OF TRANSFORMER (A)	NO & RATING OF NFB		DIMENSIO
	MAIN 1.NO	BRANCH 4.NOS	(B)
10 KVA	3P-30AF	3P-30AF	
25 〃	3P-100AF	3P-30AF	
50 〃	3P-225AF	3P-30AF	
100 〃	3P-400AF	3P-100AF	
250 〃	3P-600AF	3P-225AF	

KATHMANDU VALLEY DISTRIBUTION NETWORK PROJECT	TYPE-T, POLE
HIS MAJESTY'S GOVERNMENT OF NEPAL	DWG. NO KR-03

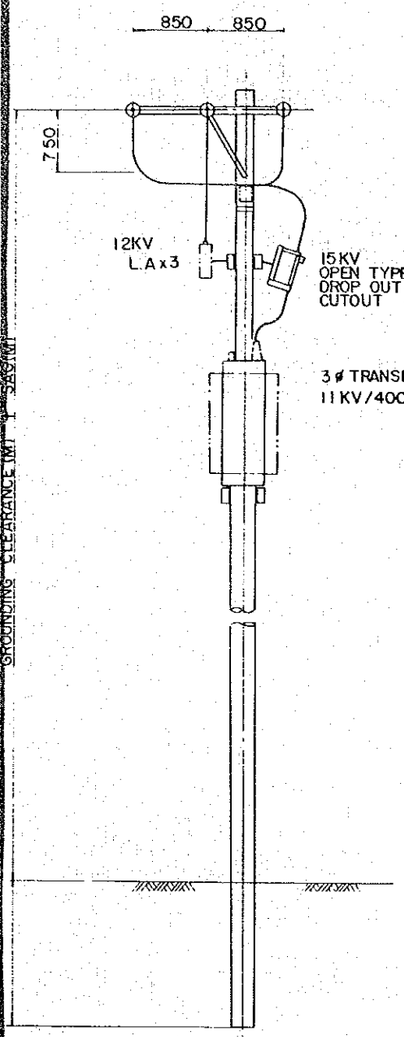

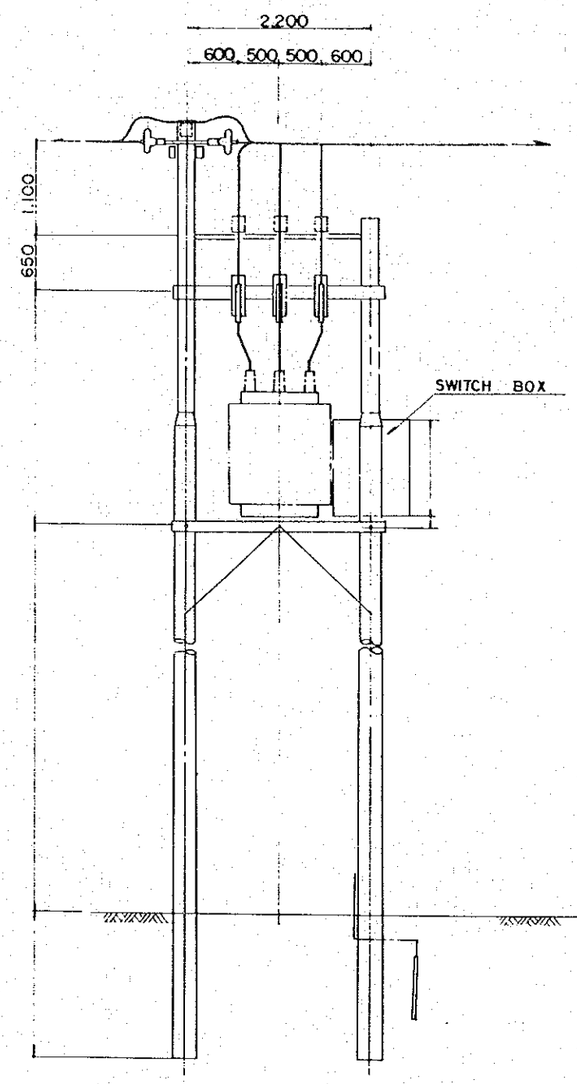

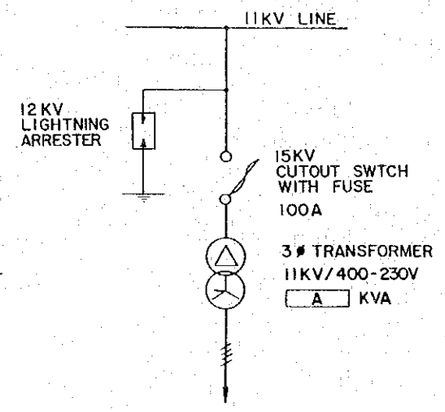

SKELETON DIAGRAM

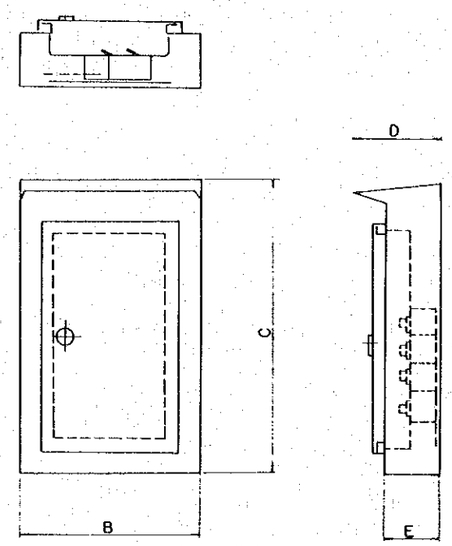

SWITCH BOX

CAPACITY OF TRANSFORMER (A)	NO & RATING OF NFB		DIMENSIONS OF SW. BOX (mm)				REMARKS
	MAIN 1.NO	BRANCH 4.NOS	(B)	(C)	(D)	(E)	
10 KVA	3P-30AF	3P-30AF					
25 〃	3P-100AF	3P-30AF					
50 〃	3P-225AF	3P-30AF					
100 〃	3P-400AF	3P-100AF					
250 〃	3P-600AF	3P-225AF					

TRANSFORMER POLE (T-TYPE)

KATHMANDU VALLEY DISTRIBUTION NETWORK PROJECT	TYPE - T, POLE	DESIGN / DATE / CHECKED / APPROVED
HIS MAJESTY'S GOVERNMENT OF NEPAL	DWG. NO KR-03	JAPAN INTERNATIONAL COOPERATION AGENCY

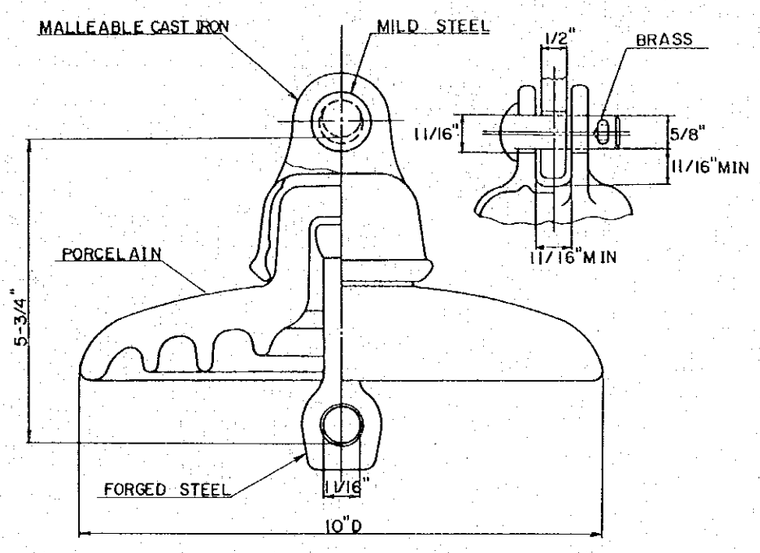

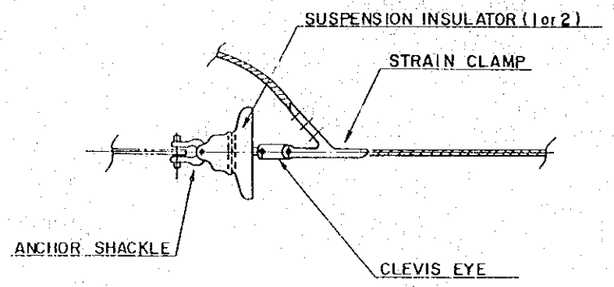

11KV TENSION HARDWARE SET

KATHMANDU VALLEY DISTRIBUTION NETWORK PROJECT	SUSPENSION INSULATOR	DRAWN DATE CHECKED APPROVED
HIS MAJESTY'S GOVERMNMENT OF NEPAL	DWG.NO KR-04	JAPAN INTERNATIONAL COOPERATION AGENCY

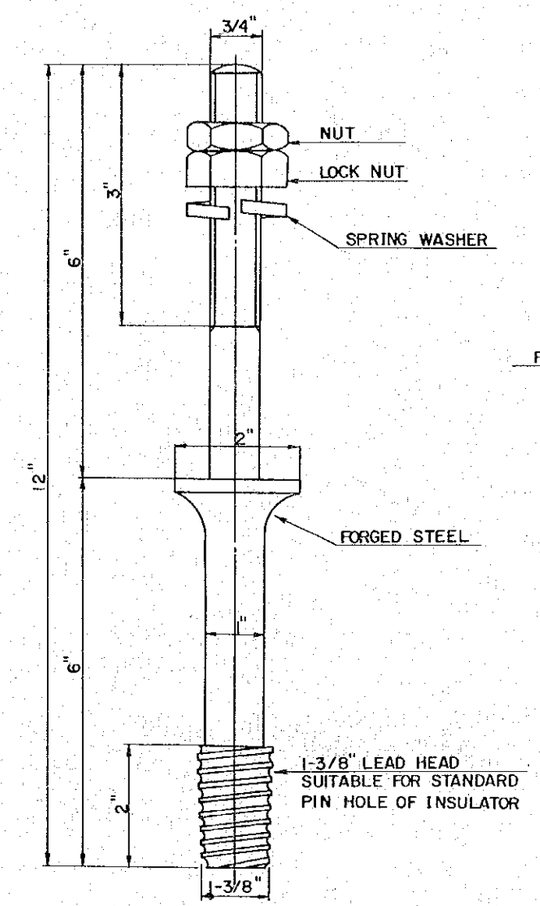

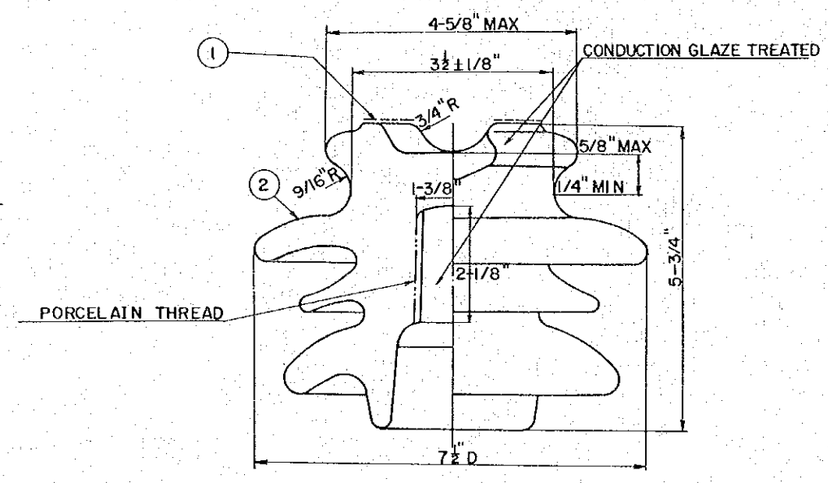

KATHMANDU VALLEY DISTRIBUTION NETWORK PROJECT	PIN TYPE INSULATOR (Chocolate Brown Glazed)	DESIGN DATE CHECKED APPROVED
HIS MAJESTY'S GOVERMNMENT OF NEPAL	DWG.NO KR-05	JAPAN INTERNATIONAL COOPERATION AGENCY

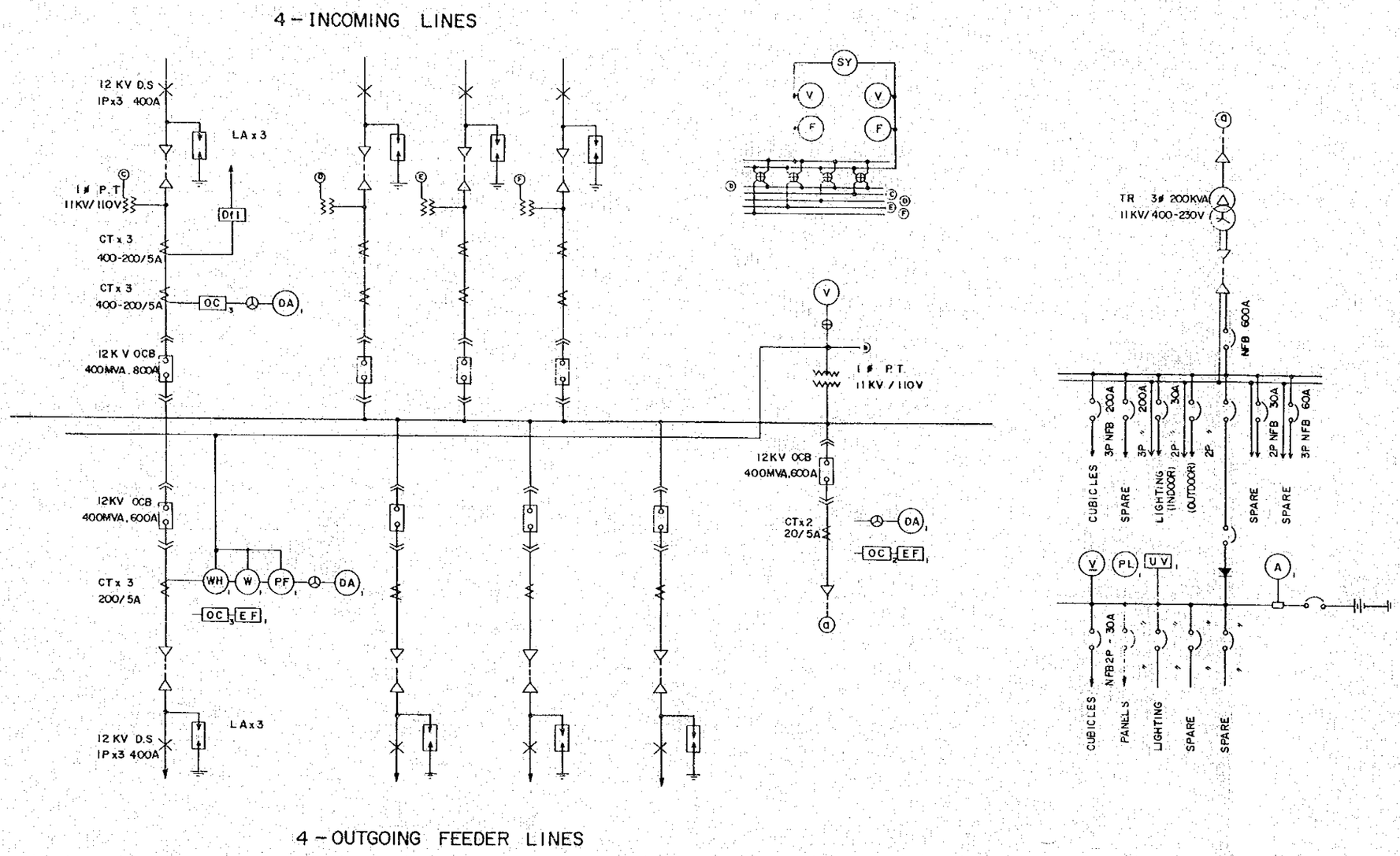

KATHMANDU VALLEY
DISTRIBUTION
NETWORK PROJECT

HIS MAJESTY'S
GOVERMNMENT OF NEPAL

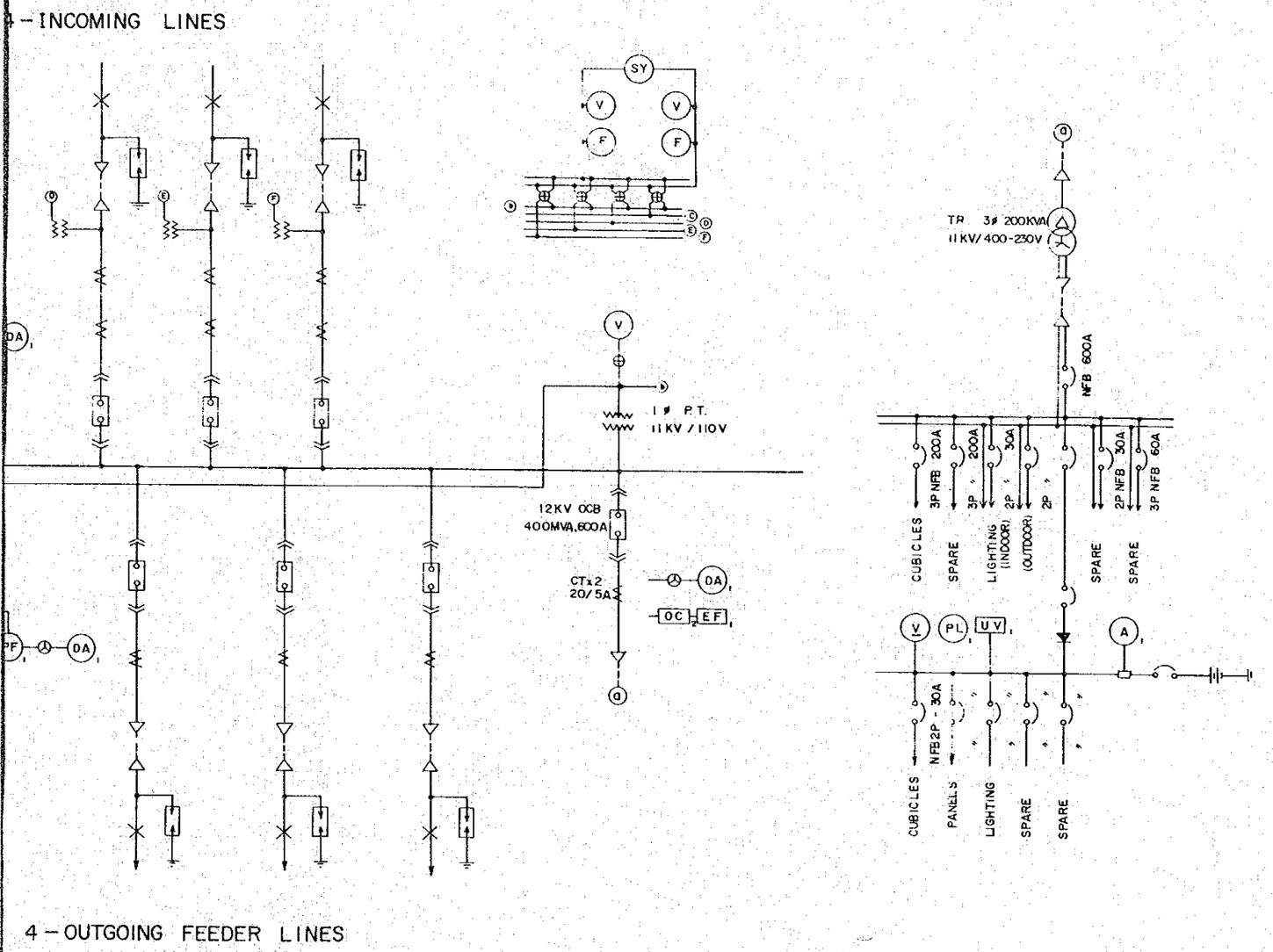

LEGEND

C.T	CURRENT TRANSFORMER
D.S	DISCONNECTING SWITCH
O.C.B	OIL CIRCUIT BREAKER
L.A	LIGHTNING ARRESTER
N.F.B	NONFUSE BREAKER
P.T	POTENTIAL TRANSFORMER
TR.	TRANSFORMER
(A)	A.C. AMMETER
(A)	D.C. AMMETER
(DA)	A.C. DEMAND AMMETER
(PL)	PIOT LUMP
(Sy)	SYNCHRONIZER
(V)	A.C. VOLTMETER
(V)	D.C. VOLTMETER
(W)	WATTMETER
(WH)	WATTHOUR METER
Df	DIFFERENTIAL RELAY
EF	EARTH FAULT RELAY
OC	OVER CURRENT RELAY
UV	UNDER VOLTAGE RELAY

KATHMANDU VALLEY DISTRIBUTION NETWORK PROJECT	LAINCHOR S.S. SINGLE LINE DIAGRAM	DESIGN / CHECKED / APPROVED / DATE
HIS MAJESTY'S GOVERMNMENT OF NEPAL	DWG. NO KR - 06	JAPAN INTERNATIONAL COOPERATION AGENCY

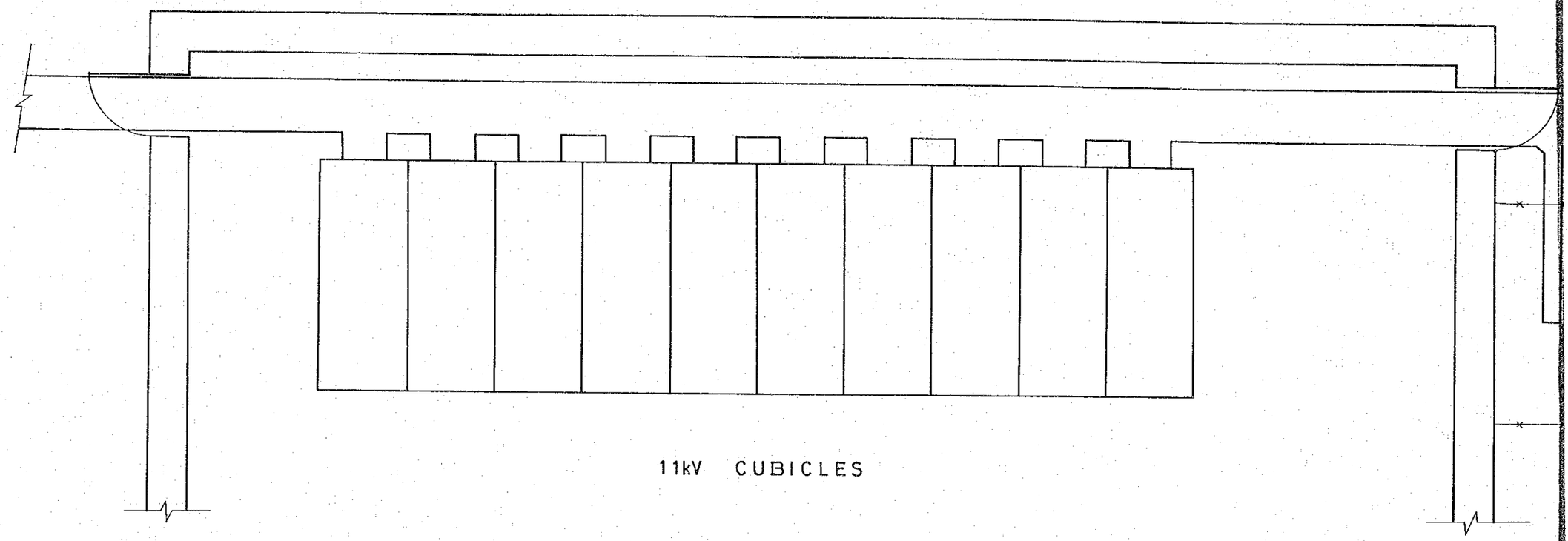

KATHMANDU VALLEY DISTRIBUTION NETWORK PROJECT	LAINCHOR SWITCHING STATI
HIS MAJESTY'S GOVERNMENT OF NEPAL	DWG.NO. KR-07

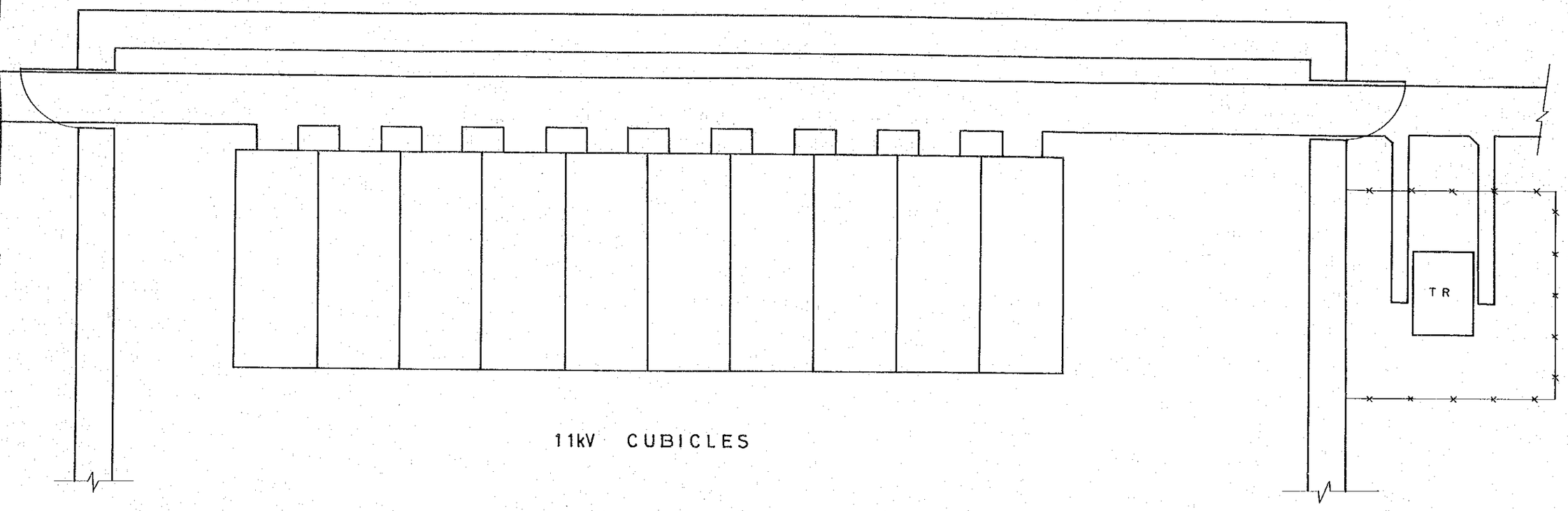

KATHMANDU VALLEY DISTRIBUTION NETWORK PROJECT	LAINCHOR SWITCHING STATION	DESING / DATE CHECKED APPROVED
HIS MAJESTY'S GOVERNMENT OF NEPAL	DWG.NO. KR-07	JAPAN INTERNATIONAL COOPERATION AGENCY

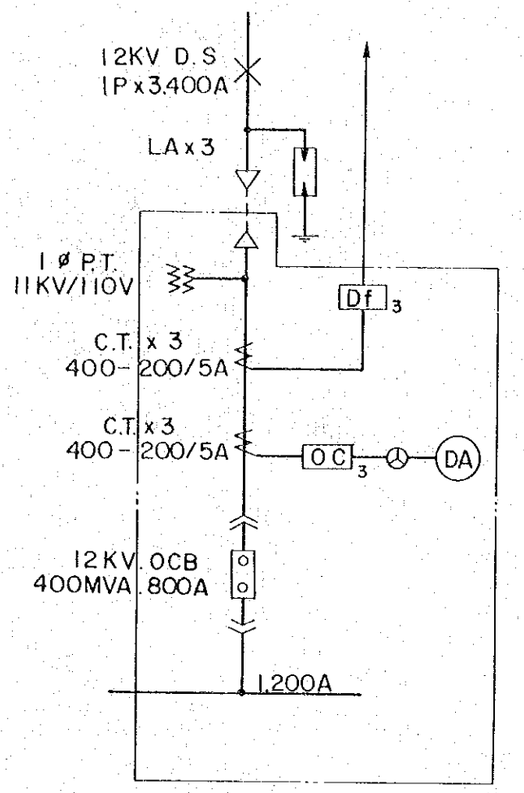

11KV INCOMING CUBICLE

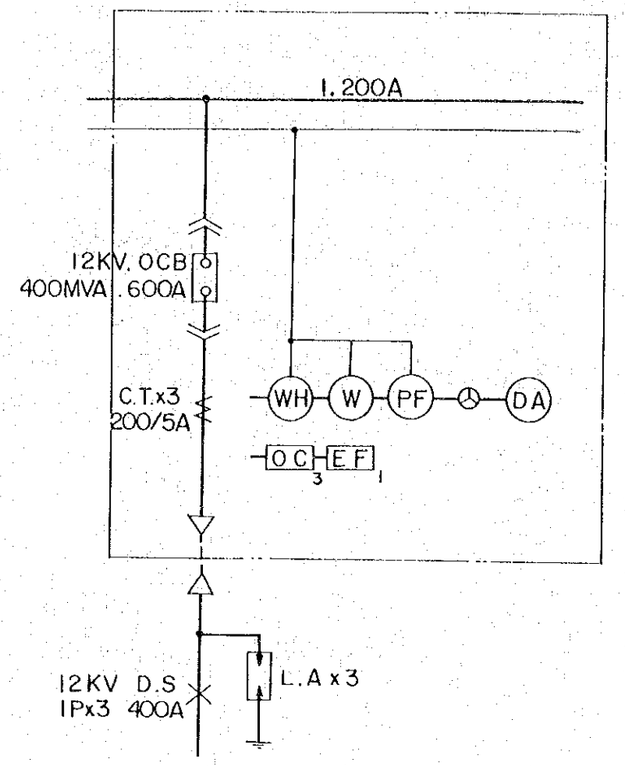

11KV OUTGOING CUBICLE

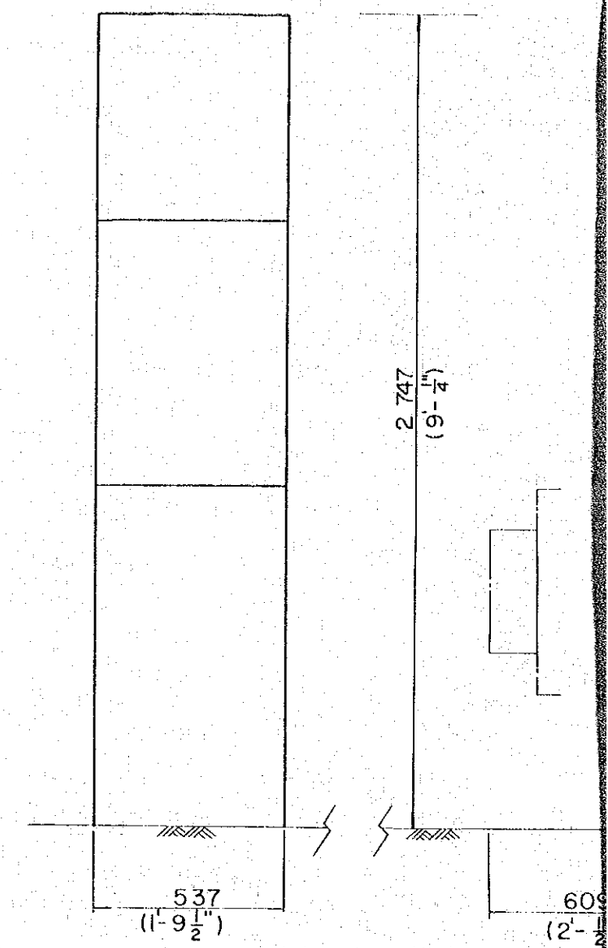

FRONT VIEW

DIMENSION OF 11KV EX

DESCRIPTION OF ADDING ELEVEN (11)
INCOMING & OUTGOING CUBICLES.

NAME	11KV CUBICLE IN.	11KV CUBICLE OUT.	REMARKS
TEKU S. S.	4 NOS.	2 NOS.	
BALAJU S. S.	—	1	
CHABEL S. S.	—	2	
K-2 S. S.	—	1	
M'GUNJ S. S.	—	1	

(ALL THE EXISTING
ARE THE ENGLISH

KATH
D
NET

HI
GOVER

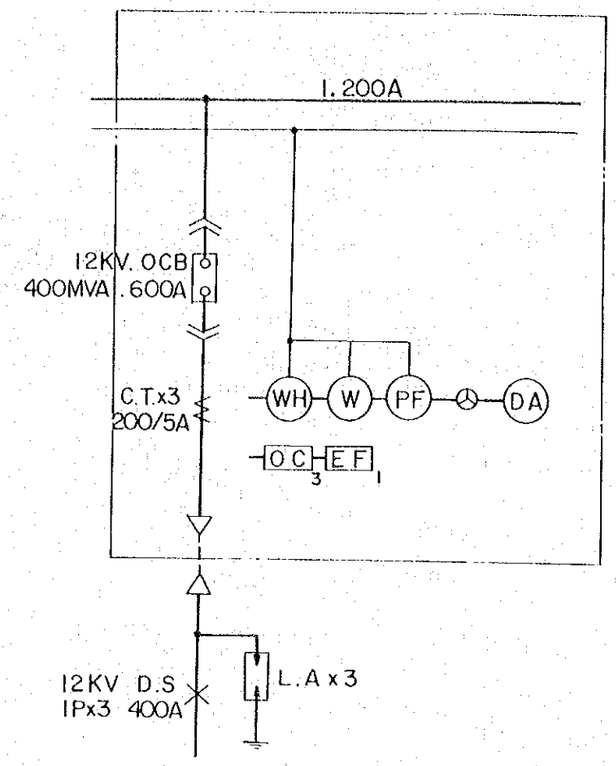

11KV OUTGOING CUBICLE

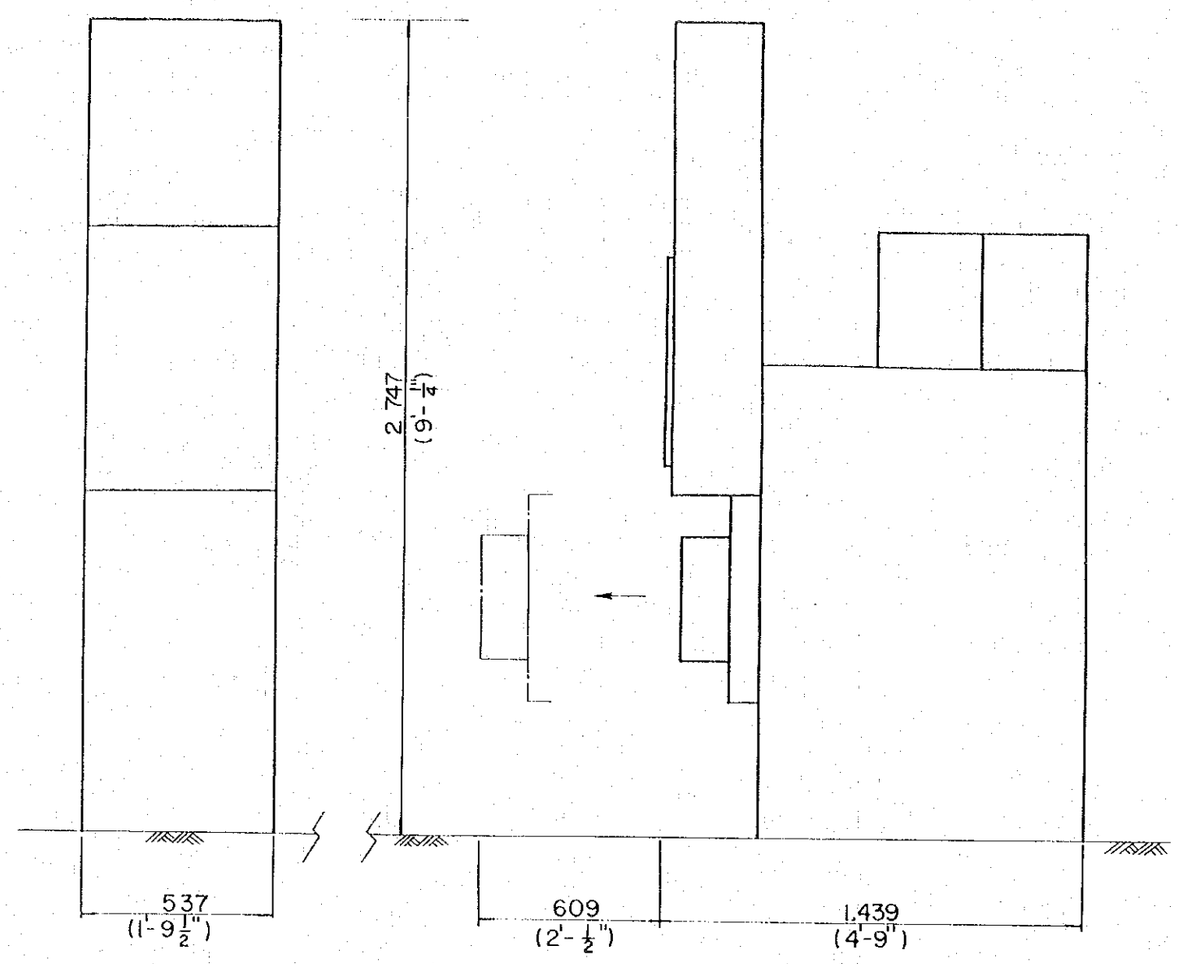

FRONT VIEW

SIDE VIEW

DIMENSION OF 11KV EXISTING CUBICLE

N OF ADDING ELEVEN (11)
OUTGOING CUBICLES.

/ CUBICLE OUT.	REMARKS
OS. 2 NOS.	
1	
2	
1	
1	

(ALL THE EXISTING CUBICLE OF DIFFERENT SUBSTATION ARE THE ENGLISH ELECTRIC CO., LTD MAKE.)

KATHMANDU VALLEY DISTRIBUTION NETWORK PROJECT	11KV EXISTING CUBICLE	DESING: DATE CHECKED APPROVED
HIS MAJESTY'S GOVERNMENT OF NEPAL	DWG. NO. KR-08	JAPAN INTERNATIONAL COOPERATION AGENCY

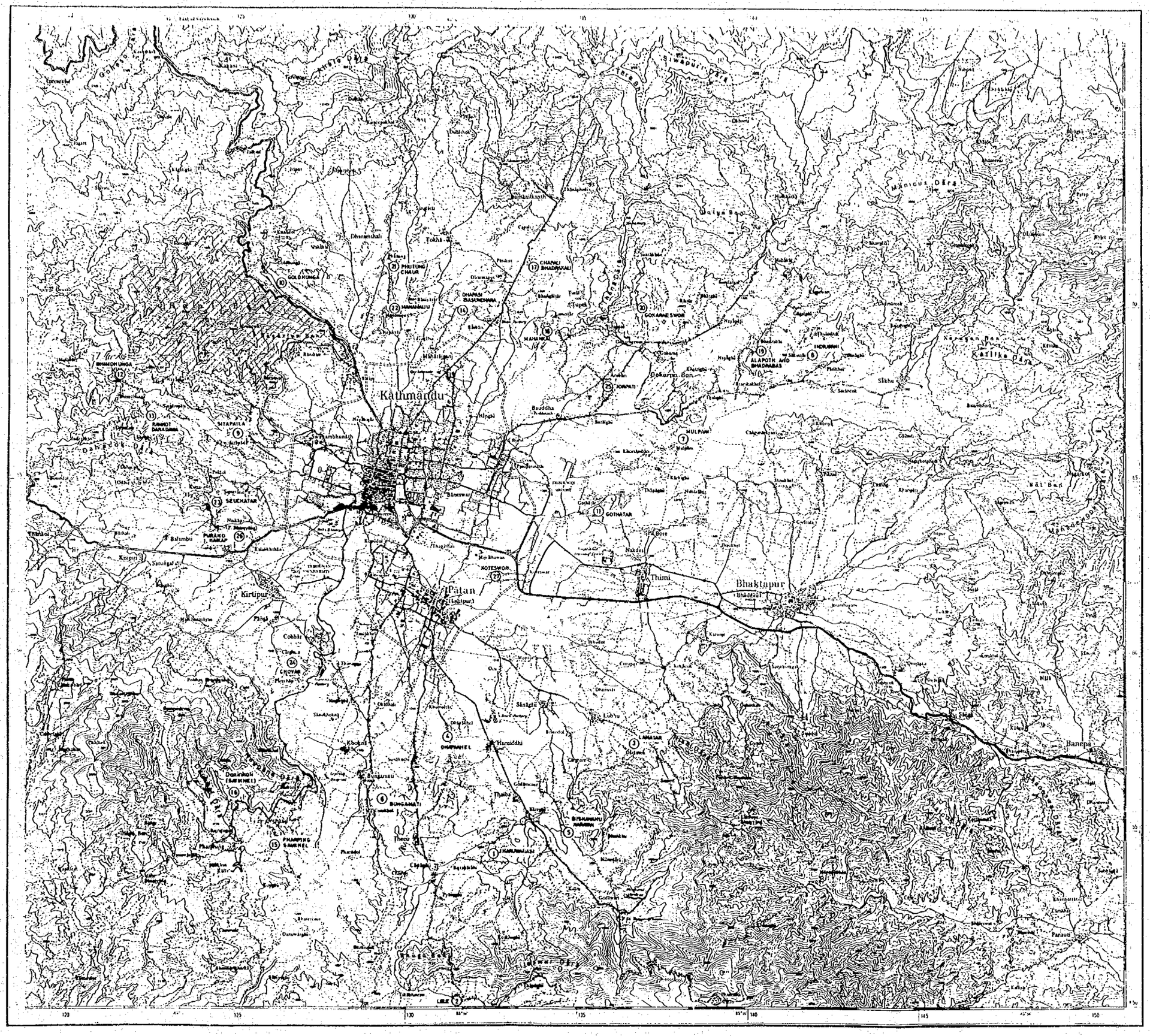
Kathmandu
Patan
Bhaktapur
Thimi
Kirtipur
Banepa
Sankhu
Panauti
Dakshin Kali
Sheshnarayan
Chandragiri
Nagarjuna
Shivapuri
Phulchoki
Manichud Dera
Dhulikhel
Dhulikel
Kathmandu Valley
1 : 50.000
8 colours
Nepal-Kartenwerk der Ar
für vergleichende Hochg
Pronunciation (thumb-rules)
KATHMANDU VALLEY
DISTRIBUTION
NETWORK PROJECT
HIS MAJESTY'S
GOVERNMENT OF NEPAL
LOCATION MAP (1)
NEP—1001
JAPAN INTERNATIONAL
COOPERATION AGENCY

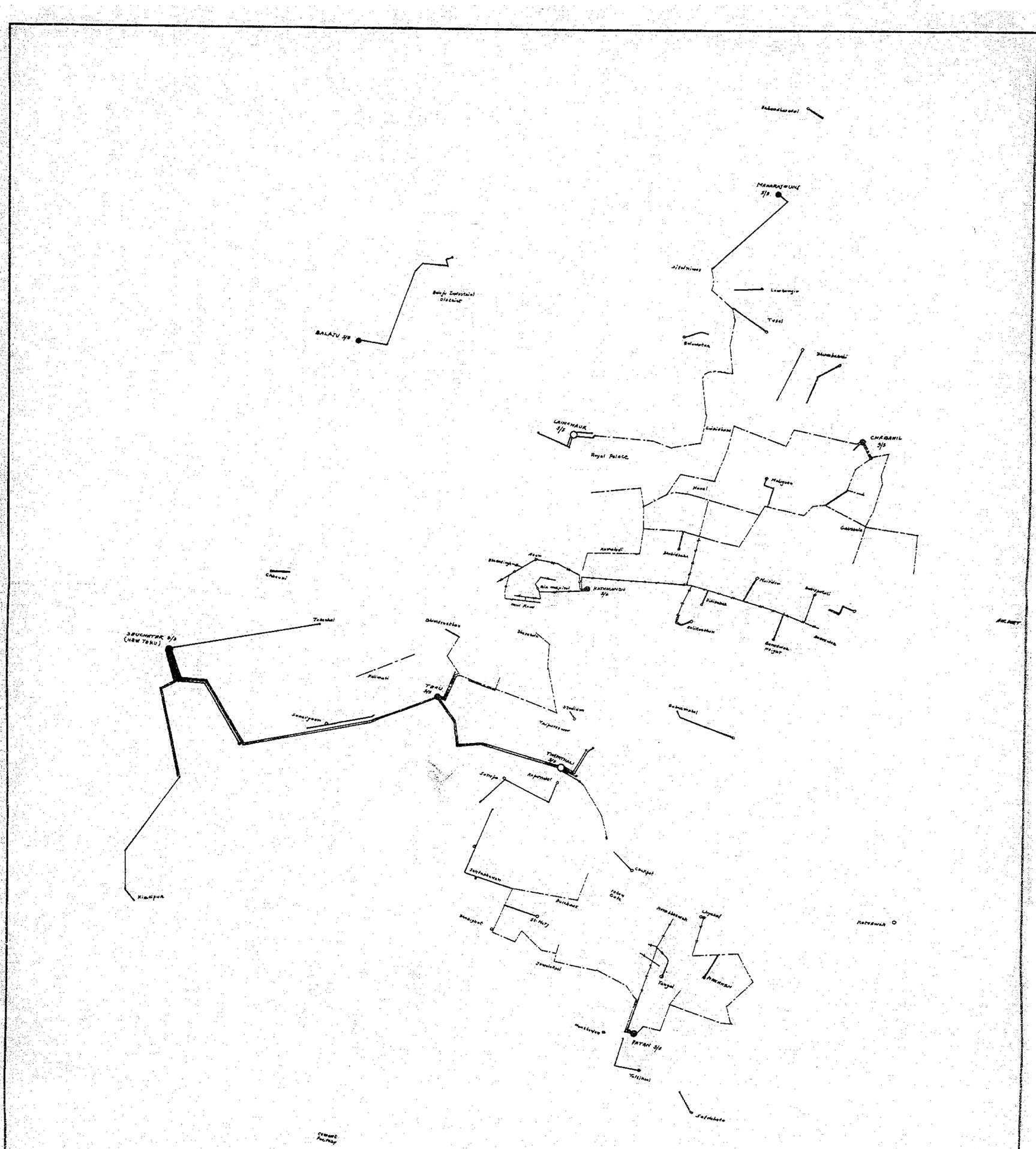

LEGEND

- EXISTING Substation
- Proposed Switching Station
- New Transformer Point
- Voltage uprating to 11kV
- Conductor Size upgrading to 0.1 sq. in. Cu. Eq. ACSR
- New 11kV Line Construction

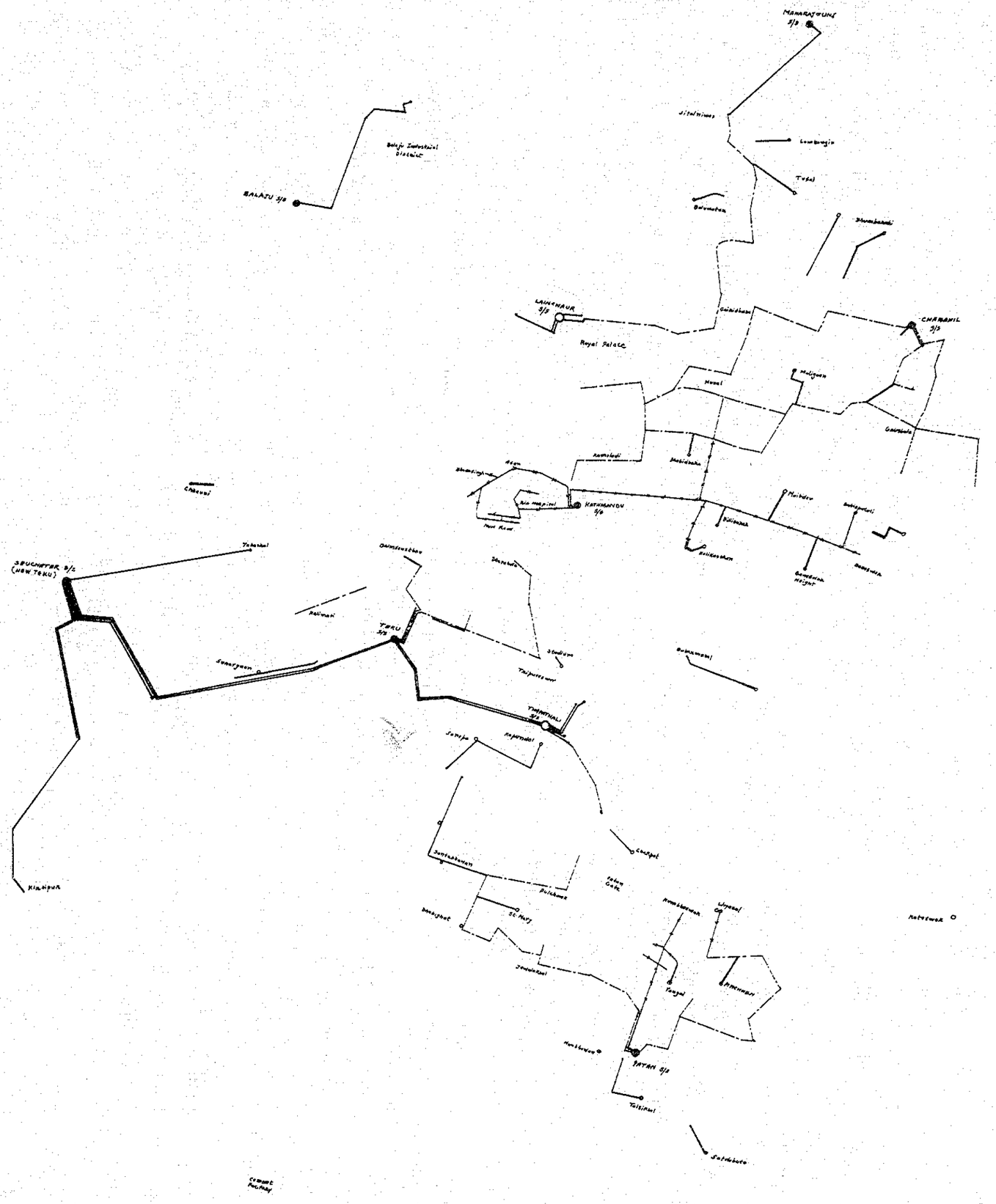

LEGEND

- EXISTING Substation
- Proposed Switching Station
- New Transformer Point
- Voltage uprating to 11kV
- Conductor Size upgrading to 0.1 sq. in. Cu. Eq. ACSR
- New 11kV Line Construction

KATHMANDU VALLEY DISTRIBUTION NETWORK PROJECT	LOCATION MAP (3)	DESING DATE CHECKED APPROVED
HIS MAJESTY'S GOVERNMENT OF NEPAL	DWG NO NEP—1003	JAPAN INTERNATIONAL COOPERATION AGENCY

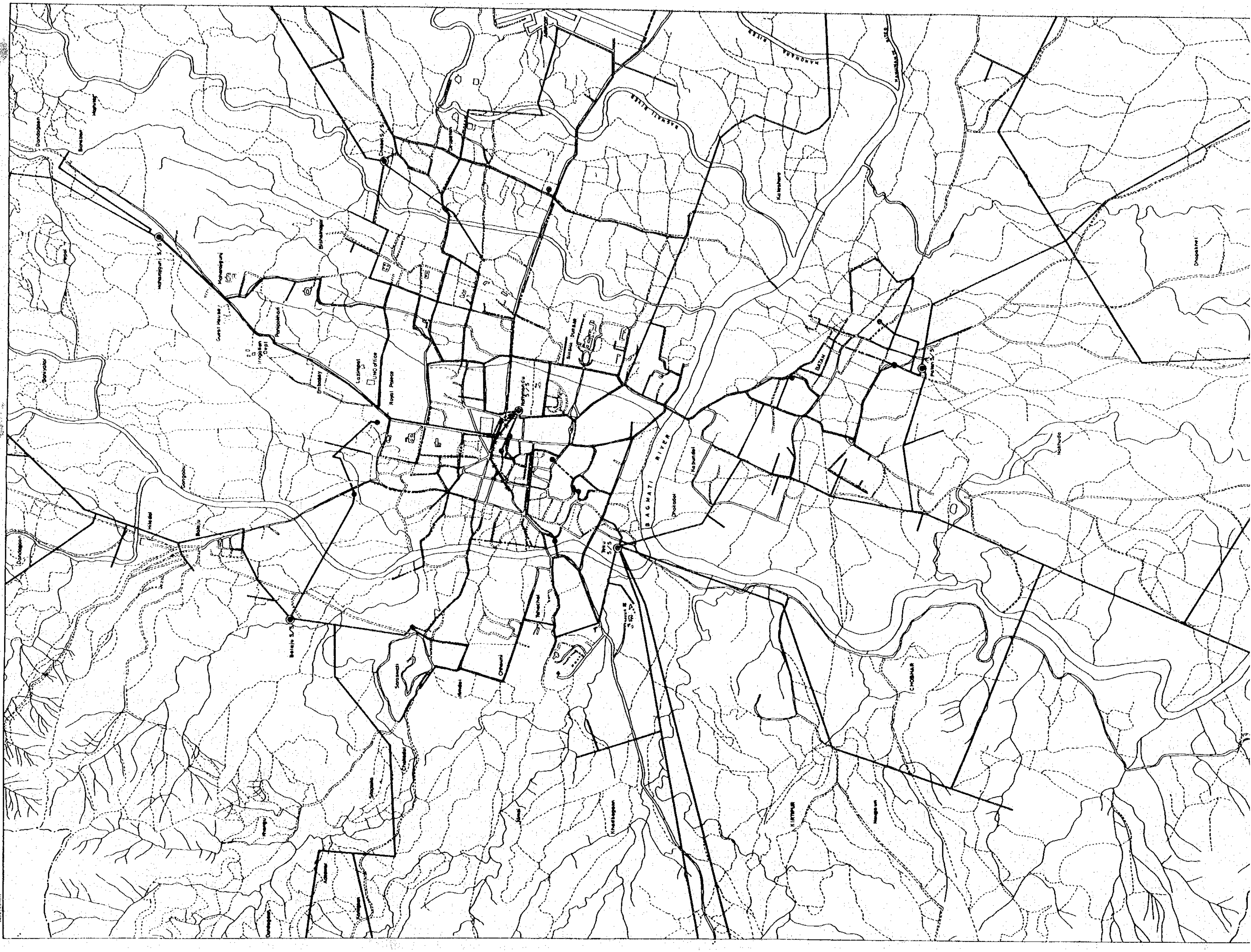
Dandagaon
Baralbar
Maharajgunj S/S
Maharajgunj
Guest House
Irrigation Dept
Panipokhari
Bishalnagar
Embassy
Lazimpat
UNO office
Royal Palace
Chabel S/S
Baniyatar
Gongabu
Hiledal
Balaju
Singha Durbar
Kathmandu S/S
BAGMATI RIVER
Dhokodol
Kopundol
PATAN
Patan S/S
Nakhudo
Dhapakhel
Kalimati
Teku S/S
Balaju S/S
Sorswoti
Hindol
Chhauni
Tahachal
CHOBHAR
KIRTIPUR
Khadkagaon
Chalnakhel
Sitapaila
Adeshwor
Dandagaon
MANOHARA RIVER
HANUMANTE RIVER

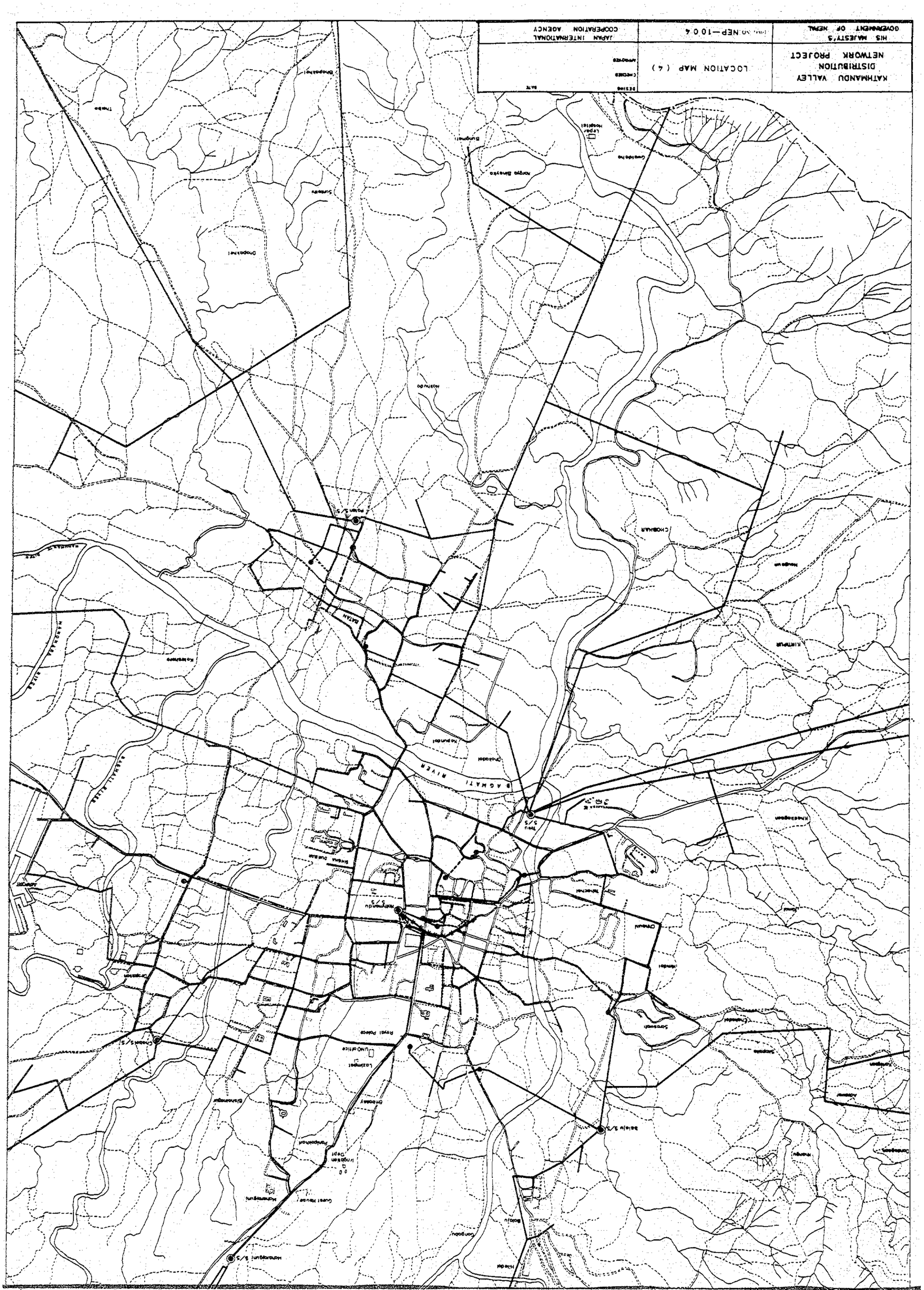
KATHMANDU VALLEY
DISTRIBUTION
NETWORK PROJECT
LOCATION MAP (4)
HIS MAJESTY'S
GOVERNMENT OF NEPAL
JAPAN INTERNATIONAL
COOPERATION AGENCY
BAGMATI RIVER
Royal Palace
Dhobighat
Lagankhel
Balaju
Teku
Kalimati
Kathmandu
Chabahil
Baneshwor
Thimi
Bhaktapur
Dhapasi
Tokha
Budhanilkantha
Gokarna
Sankhu
Pharping
Dhulikhel
Banepa
Panauti
Kirtipur
Godawari
Phulchoki
Chandragiri
Hetauda
Bhimphedi
Mahabharat Range
Thankot
Chitlang
Markhu
Daman
Sindhuli
Ramechhap
Dolakha
Sindhupalchowk
Nuwakot
Rasuwa
Dhading
Gorkha
Lamjung
Tanahun
Kaski
Syangja
Palpa
Nawalparasi
Chitwan
Makwanpur
Rautahat
Bara
Parsa
Sarlahi
Dhanusha
Mahottari
Sirha
Saptari
Siraha
Udayapur
Khotang
Okhaldunga
Bhojpur
Dhankuta
Sunsari
Morang
Jhapa
Ilam
Panchthar
Taplejung
Terai
Mahabharat Range
Siwalik Range
Kathmandu S/S
Balaju S/S
Teku S/S
Chabahil S/S
Bhaktapur S/S
Lagankhel S/S
Dhobighat S/S
Royal Palace
Lagankhel Depot
Lagankhel Hospital
Dhobighat Depot
Chabahil Depot
Bhaktapur Depot
Teku Depot
Balaju Depot
Kathmandu Depot
Chabahil Hospital
Bhaktapur Hospital
Teku Hospital
Balaju Hospital
Kathmandu Hospital
Tribhuvan Airport
Tribhuvan University
Kathmandu Valley
Bagmati River
Kathmandu Ring Road
Kathmandu Bypass Road
Ring Road
Bypass Road
Tribhuvan Highway
Prithvi Highway
Arniko Highway
Sunkoshi Highway
Mahendra Highway
Pokhara Road
Chitlang Road
Dhulikhel Road
Sankhu Road
Bhaktapur Road
Thimi Road
Kalimati Road
Balaju Road
Teku Road
Chabahil Road
Lagankhel Road
Dhobighat Road
Kathmandu Road
Gokarna Road
Dhapasi Road
Tokha Road
Budhanilkantha Road
Sankhu Road
Pharping Road
Dhulikhel Road
Banepa Road
Panauti Road
Kirtipur Road
Godawari Road
Phulchoki Road
Chandragiri Road
Hetauda Road
Bhimphedi Road
Thankot Road
Chitlang Road
Markhu Road
Daman Road
Sindhuli Road
Ramechhap Road
Dolakha Road
Sindhupalchowk Road
Nuwakot Road
Rasuwa Road
Dhading Road
Gorkha Road
Lamjung Road
Tanahun Road
Kaski Road
Syangja Road
Palpa Road
Nawalparasi Road
Chitwan Road
Makwanpur Road
Rautahat Road
Bara Road
Parsa Road
Sarlahi Road
Dhanusha Road
Mahottari Road
Sirha Road
Saptari Road
Siraha Road
Udayapur Road
Khotang Road
Okhaldunga Road
Bhojpur Road
Dhankuta Road
Sunsari Road
Morang Road
Jhapa Road
Ilam Road
Panchthar Road
Taplejung Road

JICA