8-5 Maintenance of Large Synchronous Motor

8-5-1 General

Daily checkings are required for the electric current, noise, smell and power coefficient of high voltage panel, MG panel and synchronous motors on which troubles have occurred during actual operation.

Furthrermore, checking of sliding condition and removal of carbon powder on the slip rings and brush shall be done once a month, which only are movable portion for the D.C power supply to rotor. In case of decreased contact pressure between brush and surface of commutator, sparking will occur and the surface of commutator will be striated. As short circuit between phases will occur, if conditions would be left as they are, appropriate maintenance has to be performed.

In addition, sequence test (trip condition, starting condition) and independent characteristic test of relays have to be performed systematically.

8-5-2 Control Circuit

During our staying periods, SYN-GAS COMP$^{\underline{or}}$ of ammonia plant was miss-stopped may be due to the trouble of ventilation slip ring. On this accident, it is the worse fact that the operation was restarted without any prompt investigation of sequence accident. In such case, the condition, cause and countermeasure have to be examined thoroughly and sufficiently. Sequence of Syn.gas Comp$^{\underline{or}}$ of Ammonia plant was investigated as shown in the next page. This investigation has revealed that the trouble of ventilation slip ring for trip in-put and trouble of auxiliary power source of Motor Air Temp can be indicated by alarm only and necessity of stopping may be made as dependent

upon the operator's judgement. Thus unnecessary equipment should be removed so far as practical and control circuit should be simplified as a whole. On the other hand, it is recommendable to instal ground relay, step-out relay, under-voltage relay and exciter accident relay for trip in-put.

EXPLNATION OF SYNCHRONOUS MOTOR 2500 KW MAE MOH FACTORY

(1) SINGLE LINE DIAGRAM

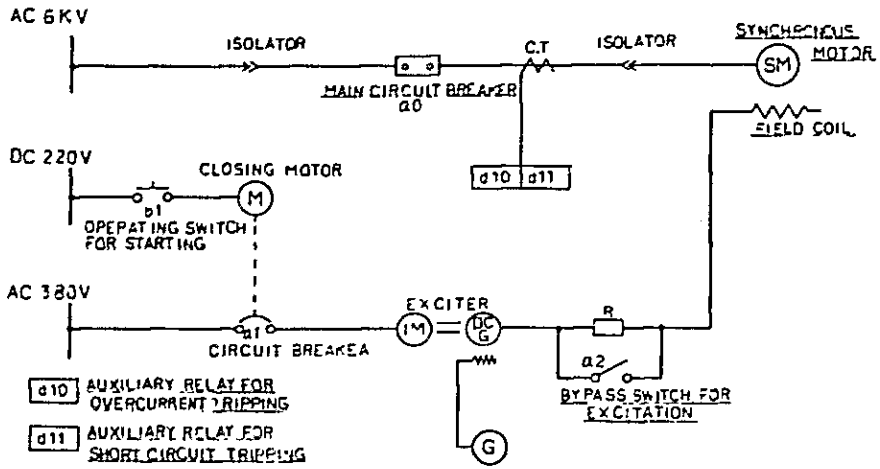

(2) AUXILIARY SOURCE

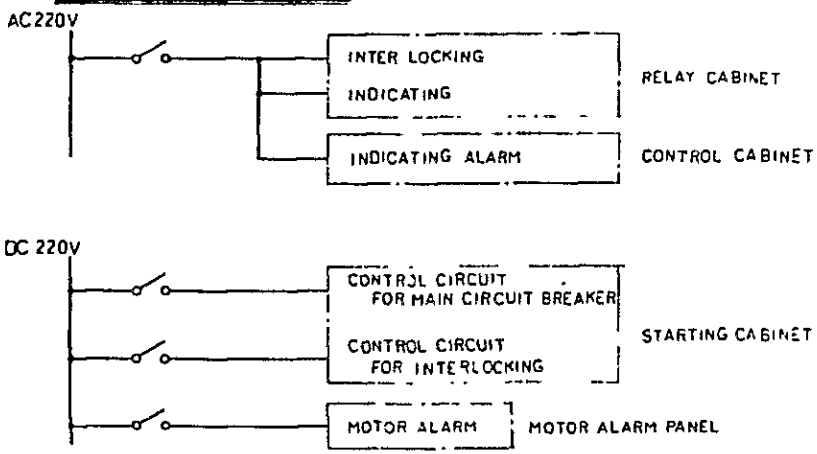

(3) STARTING - LOOP

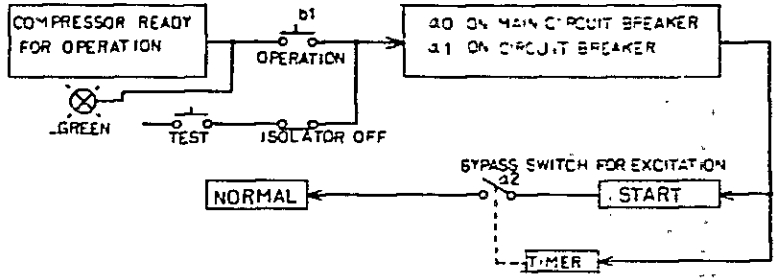

(4) STOP SYSTEM

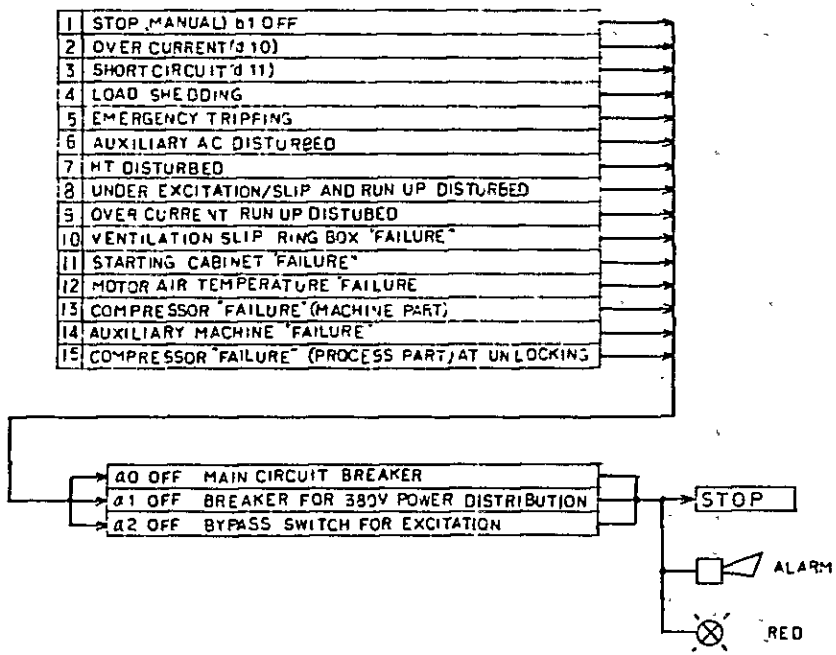

8-5-3 Insulation of Motor

For both in-door and weather-proof types, dew condensation will occur on the surface of motor coil, if the open-type motor is stopped for long periods. This phenomenon will occur due to the differences between the temperature of motor and that of surrounding atmosphere, as the temperature variation of motor is not proportional to that of atmosphere. This dew condensation will cause the decrease of insulation grade.

In addition, for the case of Mae Moh Factory, over-aged conditions of equipment aggravate the insulation grade. Appropriate counter-measures against such condition are as follows:

(1) Providing space heater to be operated during motor stop.

(2) Protecting motor from surrounding atmosphere by Cloth Cheet Cover upon motor stopping.

(3) Cleaning of coil, varnish treatment and drying, in case surface of motor coil is dusty.

For Mae Moh Factory, cleaning of coil as stated in (3) above, is indispensable measure. Sample explanation of procedure for cleaning and drying of coil is as follows:

(1) Pull out the rotator from stator.

(2) General cleaning (surface of iron core and coil)

(3) Cleaning by splashing the pure water

(4) Drying by hot air (upto approximately 100 mΩ at point "B" of the Graph)

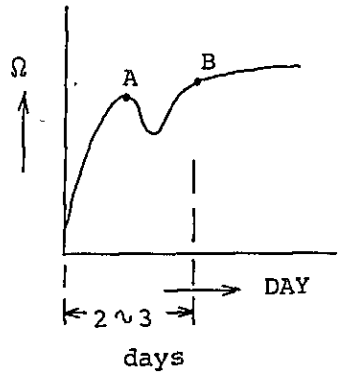

(5) Varnish treatment (Air-spraying)

(6) Re-drying by hot air (up to approximately 100 MΩ)

Total days required for the above procedure are about one week, and the supervision by the specialist is recommendable.

8-6 Record of Checking and Repairing of Grounding Facility

Grounding facility of Mae Moh Factory is net-work basically, covering wide area, and the grounding resistance can be deemed to be low enough through the year. However, since earthing electrode will be overaged by corrosion year by year, checking and maintenance of the facilities shall be properly practised. Our investigation and supervision of repair were made on the following point;

(1) Condition of mechanical and chemical damage of lead wire connecting the earthing electrode and the earthing main wire on the ground.

(2) Condition of earthing of main earthing wire on the ground and of lead wire for earthing of equipment.

Further, earthing resistance of earthing electrode was measured and entered the measured value and points on plot plan; result of which indicates to be good. Embedded earthing electrodes are newly installed around 05, Finished Dust Bunker of Gasification plant as shown on "Sketch of newly installed earthing electrode" in next page.

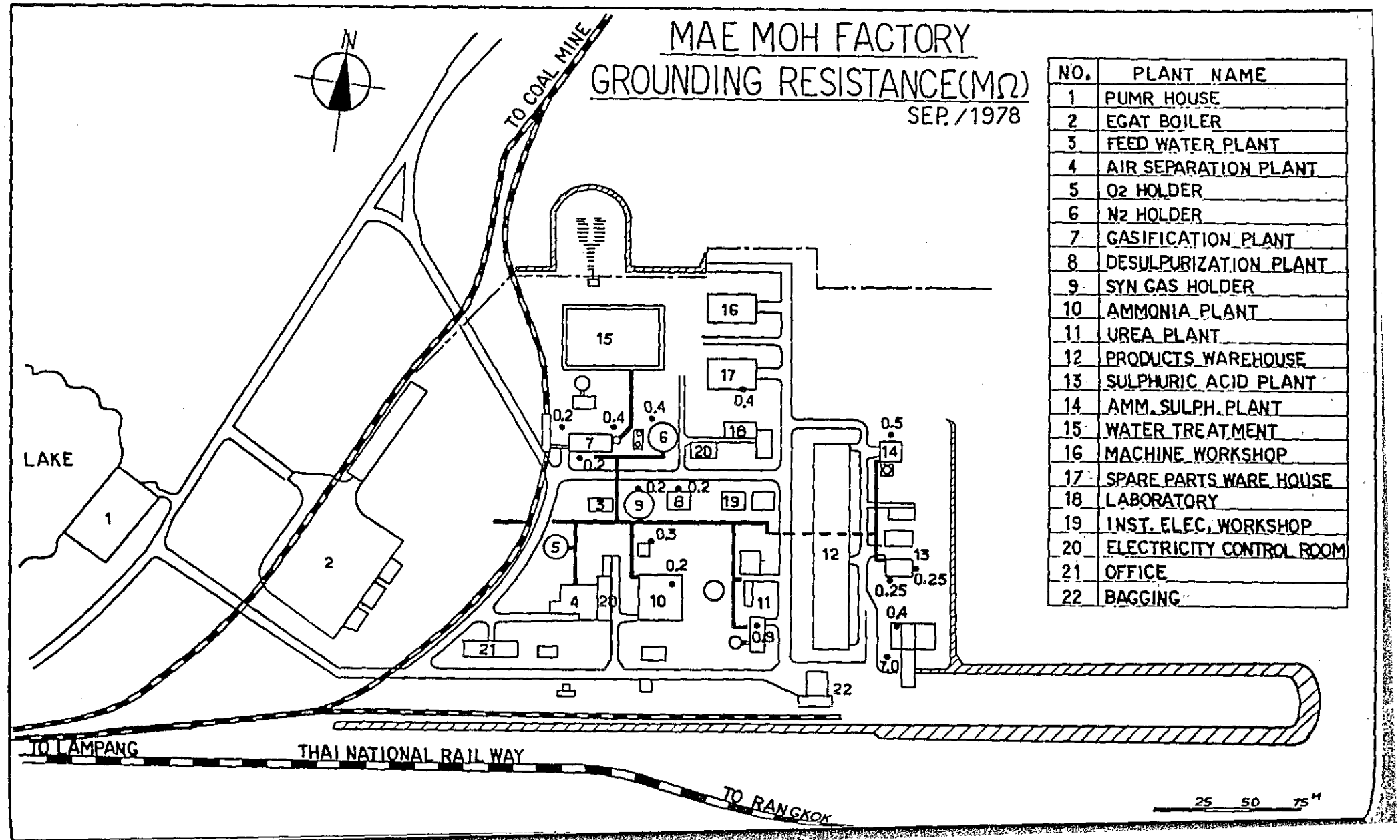

NO.	PLANT NAME
1	PUMR HOUSE
2	EGAT BOILER
3	FEED WATER PLANT
4	AIR SEPARATION PLANT
5	O2 HOLDER
6	N2 HOLDER
7	GASIFICATION PLANT
8	DESULPURIZATION PLANT
9	SYN GAS HOLDER
10	AMMONIA PLANT
11	UREA PLANT
12	PRODUCTS WAREHOUSE
13	SULPHURIC ACID PLANT
14	AMM. SULPH. PLANT
15	WATER TREATMENT
16	MACHINE WORKSHOP
17	SPARE PARTS WARE HOUSE
18	LABORATORY
19	INST. ELEC. WORKSHOP
20	ELECTRICITY CONTROL ROOM
21	OFFICE
22	BAGGING

- Sketch of Newly Installed Earthing Electrode -

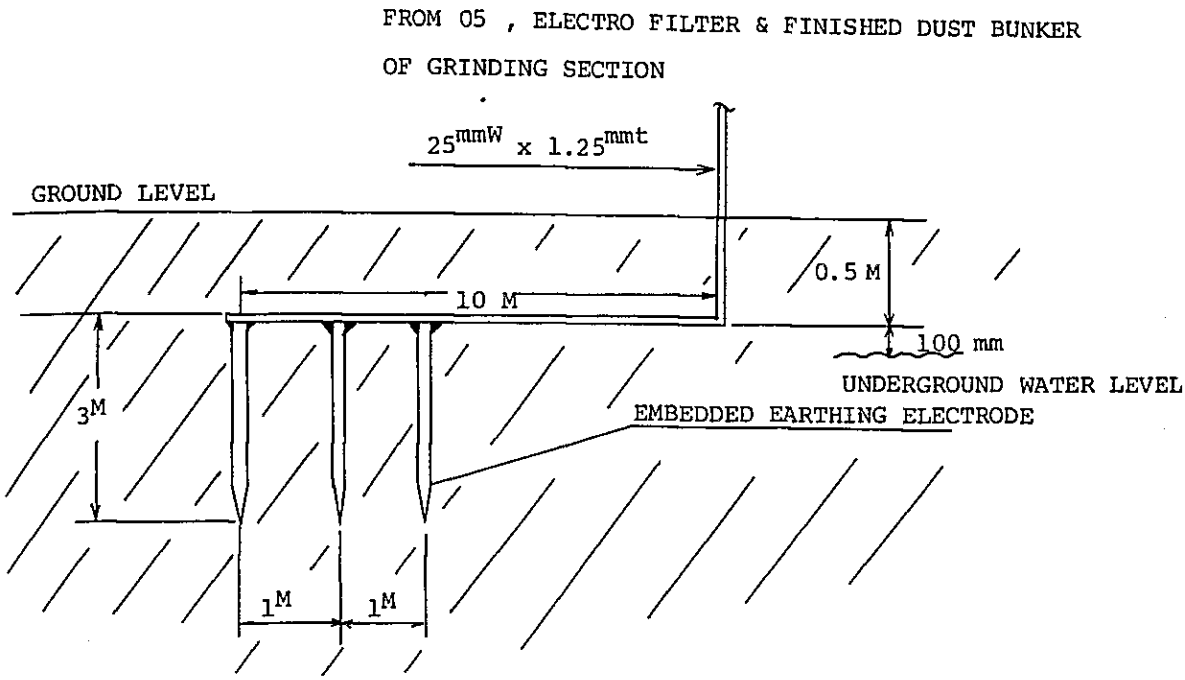

Detail of embedded earthing electrode

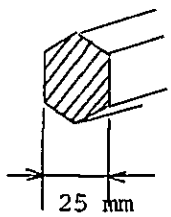

Material : Fe

Steel flat bar from 0.5, Electro Filter & Finished Dust Bunker was welded with hexagonal embedded earthing electrodes and embedded in the gound.
Earthing resistance value is 0.2 Ω, which is good.

8-7 Plan for Future Replacement

Following replacements are urgently required among electrical equipments, the cost of which is estimated as approximately Baht 570,000.-. For the replacement of the protection relay, its adjustment and cleaning of motor, two specialists have to be despatched for two weeks.

Cost for despatching Specialist:

(2 men x 14 days x @US$300 x @¥200)

+ ¥1,000,000.- = ¥2,680,000.-

≒ ¥3,000,000.-

= Baht 300,000.-

SECTION 9

REPORT FOR ANALYSIS WORK

Section 9 Report for Laboratory Analysis Work

9-1 Summary

Main works of Laboratory is process analysis and finished products analysis, with its organization of 5 sections for category of raw materials and finished products. Analysis works are performed by technicians, and the results will be reported to each plant after checkings by chemists. Analysis equipments and instruments, as commonly required, are provided.

Laboratory has 13 years experiences after the completion of the Factory, and its technical level is of capable grade to cope with the normal operation of Mae Moh Factory.

Under the present situation, there are such points to be solved as, clarification of specified control standard, maintenance of analysis equipments and instruments, provision of spare parts, improvement of requested analysis system, etc.

To state for the future direction of Laboratory, it is advised that daily works shall be more fulfilled, as auxiliary division of factory, for maintaining the overaged factory, and cooperation with plant engineers is required for solving the problems of process concerned.

9-2 Present Situation and Problem of Laboratory

9-2-1 Organization and Work Obligation

Laboratory is composed of 5 sections of Lignite, Gas, Water, Finished Products and Standard. Its works are for process analysis and finished products inspection, while there are no sections for investigation and study work.

Total numbers of staffs are 23 personnels and management is composed of 1 manager and 3 chemists, while technicians are 17 staffs.

MANAGER	LIGNITE	- CHEMIST 1 Staff	- TECHNICIAN 3 Staffs
	GAS *1	- CHEMIST 1 Staff (LIGNITE work)	- TECHNICIAN 8 Staffs
	FINISHED PRODUCT	- CHEMIST 1 Staff	- TECHNICIAN 3 Staffs
	WATER	- CHEMIST 1 Staff	- TECHNICIAN 2 Staffs
	STANDARD	- CHEMIST 1 Staff (FINISHED PRODUCT work)	- TECHNICIAN 1 Staff
			(Others- 2 labours)

*1 GAS SECTION is of 3 shift works.

(Contents of Work)

Following process analysis and finished product inspection works are executed by 5 sections.

As daily work, sampling of 40 numbers from all plants and analysis of 190 items are normally performed.

Method of analysis is of German style.

Results of the analysis of process and finished products are reported to each Plant after checking by chemists. In case that the abnormal results are produced or any problems are raised from plant side, solutions thereof are made by chemists and manager.

(Work for each Section)

LIGNITE ... Coal analysis of RAW LIGNITE and LIGNITE DUST

GAS ... Process gas analysis of each GAS, ADIP, AMMONIA, AIR SEPARATION and UREA Plant.

FINISHED PRODUCTS ... Analysis of finished products of UREA, SULPHURIC ACID, AMMONIUM SULPHATE.

WATER ... Analysis of Water Quality of RAW WATER, DRUM WATER, STEAM CONDENSATE, WASTE WATER.

STANDARD ... Preparation of Standard liquid, reagents and measurement line, and management of reagents instruments.

(Report of DAILY WORK)

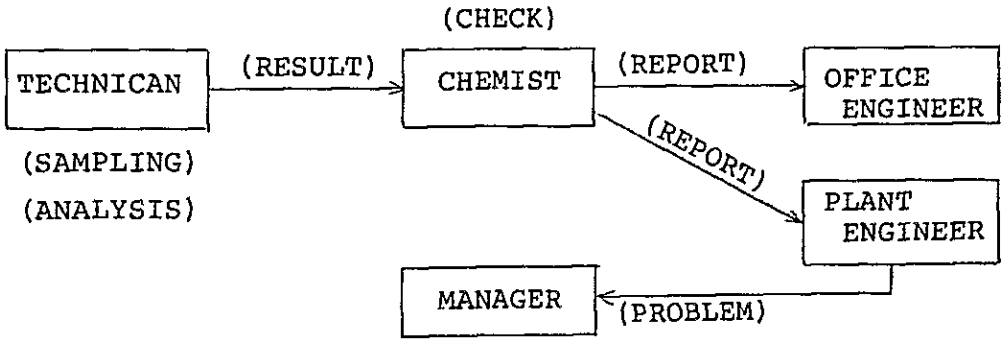

9-2-2 Study of Organization and Work

(1) Main works for chemicsts are check and management of daily work as line engineers at laboratory. However, chemists keep reserved capabilities, which can be spared to staff work, and shall be shifted to the work of investigation and study apart from lines in future.

(2) At present, specified standard values for judging the existence of abnormality in the analized results are not clear enough, and discrepancies sometimes occur among the judgements to abnormal values made by chemists and plant engineers. Specified standard values shall be established between laboratory and plants, so that the prompt and appropriate measures can be taken for abonrmal values results by laboratory and plant side.

(3) Analysis requests are conveyed to laboratory manager by plant engineers. These requests are made verbally but not by written form, whereas, sometimes, the data necessary for problem solution could not be obtained due to improper analysis items and methods. For more clarification, written form of requested analysis shall be made.

(4) As the rotation of technicians has seldom been executed between each section, flexibility for works is not sufficient. Regular rotation of technicians is necessary.

(5) At gas and standard sections, 2 chemists are in double obligations. If staffs are in short due to resigns, etc., works will be disturbed. Additional employment or training of successors is necessary.

(6) Records of previous work, preservation of technical data and transference of work at the time of resign, are not executed. These are the negative factors for proper function of laboratory. Improvement shall be made for documentation control.

9-3 Facility of Equipments and Instruments

(Analysis equipments and instruments)

As shown on attached Sheet-1, analysis equipments and instruments, as commonly required, are provided, and inquiries by operation side can be coped with.

However, most of them are of German made as having procured 10 some years before, and troubles occur sometimes due to overaged conditions. In addition, spare parts are not sufficiently provided at the time of troubles, due to totally imported commodities.

In future, appropriate consideration shall be paid for maintenance and spare parts.

(Analysis Reagents/Instruments)

Most of reagents are of imported ones. There are no problems for daily work, as the necessary quantities are reserved. It will take long time to obtain special reagents. On this regard, tie-up collaboration is necessary with adjacent universities and hospitals.

(Facility of Laboratory)

For the facilities of laboratory, gas distribution line and water purifying device for analysis work are not sufficient. Due to no gas distribution line, high pressure gas cylinders are brought in the room. This is dangerous. Water purifying device is treating the industrial water by ion exchanger and, as the quality of water purified therefrom is not good, it cannot be used for microanalysis.

(Recommendation)

1. Following equipments and instruments shall be procured immediately.

	Cost (Baht 1000)
1) Element Analyzer (Damaged previously)	200.
2) Colorimeter (often troubled)	60.
3) Gas Chromatography Sample Device (heavily rusted)	10.
Total	270.

2. Counter Measure for Facilities of Laboratory

Construct the internal distribution line of N_2 Gas and analysis work fuel gas, and construct housing for high pressure cylinder at outside. N_2 Gas can be made available by branching from utility line.

Water Purifying Device:

Newly construct the distilled water production device, or draw in the purified water from plant and treat by ion exchanger.

Total cost is estimated as Baht 30,000.-.

9-4 Chemist & Technician

Chemists have enough chemical knowledge for factory.

They keep reserve-capacilities under checking and management of daily work. These reserve-capabilities shall be applied to cooperation work with plant engineers, without limiting to daily work of laboratory.

For maintaining factory, it is necessary to solve problems by cooperated work of plant side and laboratory without limiting to daily work only. For this purpose, it is important to keep close communications with engineers and to study plant (plant engineers' advices are also necessary).

Technicians' works are accurate and their analysis techniques are good. As their fundamental knowledges for chemicals and safety precautions are not sufficient, instructions on these points to them by manager and chemist will result the further level-up of their technical standards.

9-5 Future Direction of Laboratory

For the future direction of Laboratory, further fulfillments of daily works shall be established, together with solution of process problems due to overaged condition of factory, under cooperation with plant side, in consideration of the overaged condition of plant.

Following matters are recommended as future direction;

1. Work for Chemist and Technician

   By transferring checking work of daily work for chemist to technician, reserve energy of chemist shall be used for solving the various problems of whole factory.

   In future, investigation and study sections shall be established in laboratory, and chemists shall execute staff work, while daily work shall be managed by section leaders promoted from technicians.

2. Management of Specified Value for daily work.

   For daily work, specified standard value shall be established, so that technician can check analysis results.

   While there would be no problem for raw material coal and finished products inspection, specified standard value shall be established for the judgement of existence of process abnormality on water analysis and process gas analysis.

   For water analysis, it is appropriate to establish specified standard value under confirmation between laboratory and plant managers, by referring Japan Boiler Code and examples of boiler water quality control as introduced by us at this time.

For process gas analysis, specified standard value shall be established after study and confirmation between managers, judging from Data comparison between stable period and abnormal period of plant, analysis designed value and previous investigation report. This specified standard value shall be thoroughly made known to technicians and abnormal case, if happen, shall be made possible to be promptly reported.

3. Requested Analysis

Written form shall be provided so that the requested analysis can be made easily by plant side and the result can be used effectively. In the request form, items of purpose, sample name, time, analysis items, and urgency shall be provided. In report form, items of analysis purpose, sample name, analysis result and comment shall be provided, and the reports shall be preserved as record.

Sample forms are shown on attached sheet 2 and 3.

4. Facilities of Equipments and Instruments

As the analysis equipments and instruments are imported, spare equipments and spare parts shall be stocked. Especially, for the one set equipment in the List as indicated in attached sheet-1, attention shall be paid.

As the repair makers for analysis equipments are not available, maintenance of them shall be considered and clarify the man of responsible for equipments handling.

Operation method shall be standardized and operation shall be performed with thorough knowledge by indicating important points of operation on indicating board, etc.

5. Training, Rotation and Staffs

For the further level up of technicians, work training and regular rotation are necessary.

Work trainins are,

Fundamental chemical knowledge (As understandable for analysis methods)

Pant characteristics (As understandable knowledge for analysis purpose)

Specified Standard Value for control

Safety Work Knowledge (Knowledge for high pressure gas, dangerous objects, poisonous substances, as handled in factory)

Rotation shall be performed regularly once a year and shall be planned so that one rotation for all sections can be completed for 4 years.

Manager shall consider the reserves of staffs for non-disturbance to daily work and the execution of aforesaid training and rotation can be helpful for the case of unexpected short of staff numbers.

6. Preservation of Record and Documents

As the preservation of previous work records and technical data, and the transference of work at the time of chemist resigning, have not been executed, systemization of them shall be established. In addition, as the reference documents and data are not sufficient for investigation and study for the problems on the work, the necessary volumes and kinds of such documents shall be provided.

Attached Sheet - 1

INSTRUMENT OF LABORATORY

NO.	INSTRUMENT/APPARATUS	Q'TY	REMARKS
1	ELEMENT ANALYZER	0	LIGNITE ANALYSIS
2	CALORIMETER	1	LIGNITE ANALYSIS
3	ASH MELTING POINT METER	1	"
4	SMASH MACHINE	1	"
5	SMASH MACHINE SCREW TYPE	2	"
6	SHAKER	1	"
7	SIEVES	1	"
8	GASCHROMATOGRAPH	1	GAS ANALYSIS
9	ORSAT APPARATUS	2	"
10	GAS METER (WET TYPE)	2	"
11	LABO MINI PUMP	3	"
12	ELECTRIC PHOTOMETER	1	WATER & FINISHED PRODUCT ANALYSIS
13	PH METER	2	"
14	CONDUCTIVITY METER	1	"
15	ELECTRIC BALANCE (PRECISEN)	2	GENERAL ANALYSIS
16	ELECTRIC BALANCE	3	"
17	ELECTRIC FURNACE	2	"
18	ELECTRIC DRY OVEN	3	"
19	ELECTRIC REFRIGERATOR	1	"

Attached Sheet - 2

FROM OF REQUEST FOR ANALYSIS

REQUEST FOR ANALYSIS

SAMPLE		SIGNATURE
SAMPLING DATE		
(PURPOSE)		
(Req, Finished Date)		
(ANALYSIS ITEM)		

Attached Sheet - 3

PLANT

SIGNATURE

ANALYSIS REPORT

NO DATE:

THEME		REQUESTED PLANT	
TEST TIME		ANALYSER	

(ANALYSIS PURPOSE)

(ANALYSIS ITEM & METHOD)

(ANALYSIS RESULTS)

(OBSERVATION)

(REMARKS)

(EXAMINATION DATA) OTHER PIECE

9-6 Analysis Results

Plant	Sample	Sampling Point	Analysis Item	Analysis Method	Analysis Result		Remarks (Spec.)	
Gasification	Raw Lignite	from the Train	H_2O	Xyrol Extraction	35.11	wt%	33.0	1/DAY
			CO_2	$Ba(OH)_2$ Titration	1.90	"		1/DAY
			C	Soda lime gravimetric		"	52.8	1/WEEK
			H	P_2O_5 "		"	3.9	"
			N	Hydrogenation		"	2.3	"
			S	Combustion	2.59	"	4.2	"
			Ash content	gravimetric	15.52	"	22.3	"
			SiO_2 in Ash	Absorption	9.0	"	31.1	1/DAY
			Al_2O_3 "	gravimetric	4.99	"	22.4	"
			CaO "	Titration with EDTA	31.50	"	7.8	"
			Fe_2O_3 "	" $KMnO_4$	11.97	"	26.7	"
			MgO "	" EDTA	2.19	"	2.0	"
			Softening point		1340	°C	1080°C	1/WEEK
			Melting "		1390	"	1300°C	"
			Flowing "		1410	"	1300°C	"
			Heat of Combustion	Calorimeter	5712	Kcal/kg	5110 High & water free	1/WEEK

Plant	Sample	Sampling Point	Analysis Item	Analysis Method	Analysis Result		Remarks (Spec.)	
Gasification	Lignite dust	Screw feeder	H_2O	Xyrol Extraction	6.78	wt%		1/DAY
			CO_2	Ba(OH) Titration	2.20	"		1/DAY
			C	Soda lime gravimetric	51.30	"		1/WEEK
			H	P_2O_5 "	4.69	"		"
			O		17.53	"	Calculated	"
			N	Hydrogenation	1.85	"		"
			S	Combustion	1.75	"		1/DAY
			Ash content	gravimetric	16.10	"		"
			SiO_2 in Ash	Absorption	8.89	"		"
			Al_2O_3 "	gravimetric	7.54	"		"
			CaO	Titration with EDTA	27.85	"		"
			Fe_2O_3	" $KMnO_4$	14.77	"		"
			MgO	" EDTA	5.93	"		"
			Softening point		1430	°C		1/DAY
			Melting "		1495	"		"
			Flowing "		1535	"		"
			Heat of Combustion					1/DAY

Plant	Sample	Sampling Point	Analysis Item	Analysis Method	Analysis Result		Remarks (Spec.)	
Gasification	Lignite dust (Cont'd)	Screw feeder	Dust Size	Screening				1/DAY
			>0.2 mm		1.2	wt%		
			>0.09		26.2	"		
			>0.06		14.8	"		
			<0.06		57.8	"		
	Syn. gas	Effluent of final cooler	CO_2	Orsat	9.5	vol%		2/SHIFT
			O_2	"	0.0			
			CO	"	60.6			
			H_2	"	24.5			
			N_2 (+Ar)	"	5.3			
			CH_4	"	0.1			
ADIP (Desulphurization)	ADIP inlet gas	Before Absorber	H_2S	Iodine Titration	0.16	vol%		1/DAY
	outlet gas	After "	H_2S	Ditto	105	ppm		
	vent gas	After Regenerator	H_2S	Ditto	2.68	vol%		

Plant	Sample	Sampling Point	Analysis Item	Analysis Method	Analysis Result		Remarks (Spec.)	
Ammonia Synthesis	Inlet gas	before Saturator	CO_2	Orsat	10.5	vol%		1/SHIFT
			O_2	Ditto	0.0	"		
			CO	Ditto	56.1	"		
			CH_4	Ditto	0.0	"		
			H_2	Ditto	27.6	"		
			N_2(+Ar)	Ditto	5.8	"		
	Outlet of CCV#I		CO_2	Orsat	38.0	"		1/SHIFT
			CO	Ditto	5.7	"		
	Outlet of CCV#2		CO_2	Orsat	40.3	"		1/SHIFT
			CO	Ditto	3.7	"		
	Outlet of CO_2 Absorber		CO	Orsat	5.1	"		1/SHIFT
			N_2	Ditto	7.8	"		
			H_2	"	87.6	"		
	Outlet of Flash vessel		CO_2	Orsat	65.9	"		1/SHIFT
			CO	Ditto	3.1	"		
			H_2	Ditto	27.2	"		
			N_2(+Ar)	Ditto	5.8	"		

Plant	Sample	Sampling Point	Analysis Item	Analysis Method	Analysis Result		Remarks (Spec.)	
Ammonia Synthesis	Syn. gas	Syn. gas Comp. 7th Stage	H_2	Orsat	74.7	vol%		1/DAY
			N_2	Ditto	25.0	"		
			O_2	Gaschromatograph	0.0	"		
			Ar	Ditto	0.3	"		
			CO	Ditto	0.0	"		
			CO_2	Ditto	46.8	ppm		
	Return gas	CO Scrubber return line	CO_2	Orsat	8.4	vol%		2/WEEK
			CO	Ditto	78.6	"		
			H_2	Ditto	3.8	"		
			N_2	Ditto	9.2	"		
	Ammonia converter inlet		H_2	Orsat	61.5	vol%		1/SHIFT
			N_2	Ditto	30.2	"		
			CH_4	Gaschromatograph	0.0	"		
			CO	Ditto	0.0	"		
			CO_2	Ditto	40.0	ppm		
			Ar	Ditto	3.6	vol%		
			NH_3	Absorption	4.7	"		

Plant	Sample	Sampling Point	Analysis Item	Analysis Method	Analysis Result		Remarks (Spec.)	
Ammonia Synthesis	Ammonia Converter outlet		H_2	Orsat	50.1	vol%		1/SHIFT
			N_2	Ditto	28.8	"		
			Ar	Gaschromatograph	4.2	"		
			NH_3	Absorption	17.0	"		
	Tail gas	Tail gas Scrubber	H_2	Orsat	61.8	vol%		2/WEEK
			N_2		38.2	"		
Urea	CO_2 gas	before CO_2 Compressor	CO_2		96.4	vol%		1/2HR
Feed Water	Raw water	inlet of flocculator	pH	pH meter	6.75	-		1/DAY
			P-alkalinity	Titration	0	mg/l		
			M- "	Ditto	2.35	"		
			Total Hardness	Ditto	237.2	"		
			Carbonate "	Ditto	117.8	"		
			Silica	Absorption	1.0	"		
			Chloride	Distillation	4.0	"		
			Ammonium	"	20.0	"		
			Nitrate	Absorption	14.0	"		
			Sulphate	"	113.4	"		

Plant	Sample	Sampling Point	Analysis Item	Analysis Method	Analysis Result		Remarks (Spec.)	
Feeder water (cont'd)	Clean Water	Outlet of sand filter	pH	pH meter	8.7			1/DAY
			P-alkalinity	Titration	0.5	mg/l		
			M- "	Ditto	1.0	"		
			Total Hardness	Ditto	161.1	"		
			Carbonate	Ditto	50.1	"		
			Chloride	Absorption	5.8	"		
	Soft water	Tank	pH	pH meter	8.8			1/DAY
			P-alkalinity	Titration	0.25	mg/l		
			M- "	"	0.30	"		
			Total Hardness	"	2.68	"		
			Conductivity	Conductance meter	54.0	μ℧/cm		
	Feed water	Deaerator outlet	pH	pH meter	8.8			1/DAY
			P-alkalinity	Titration	0.3	mg/l		
			M- "	"	0.45	"		
			Ditto	Winkler method	1.78	"		
			P_2O_5	colorimetric	0.04	"		
			SO_4^{--}	"	1.80			
			N_2H_4		0.33			
			Conductivity		62			

Plant	Sample	Sampling Point	Analysis Item	Analysis Method	Analysis Result		Remarks (Spec.)	
Gasification	Drum water		pH	pH meter	10.75			1/DAY
			P-alkalinity	Titration	3.35	mg/l		
			M- "	Ditto	3.75	"		
			P_2O_5	Colorimetric	5.15	"		
			N_2H_4	Ditto	0.19	"		
			SO_4^{--}	Ditto	70.20	"		
			Conductivity	Conductivity meter	1150.	μ℧/cm		
Auxiliary Plant	Feed Water	Boiler	pH	pH meter	8.80			1/DAY
			P-value	Titration	0.30	mg/l		
			M-value	"	0.45	"		
			Ditto	Winkler method	1.78	"		
			P_2O_5	Absorption method	0.04	"		
			N_2H_4	"	0.33	"		
			SO_4^{--}	"	1.80	"		
			Conductivity	Conductivity meter	62 ~	μ℧/cm		

Plant	Sample	Sampling Point	Analysis Item	Analysis Method	Analysis Result		Remarks (Spec.)	
Gasification Plant	Drum Water		pH	pH meter	10.75			1/DAY
			P-value	Titration method	3.35	mg/l		
			M-value	"	3.75	"		
			P_2O_5	Absorption method	5.15	"		
			N_2H_4	"	0.19	"		
			SO_4^{--}	"	70.20	"		
			Conductivity	Conductivity meter	1150	μℭ/cm		
Ammonia Synthesis	Drum Water		pH	pH meter	8.95			1/DAY
			P-value	Titration method	0.25	mg/l		
			M-value	"	0.40	"		
			P_2O_5	Colorimetric	0.04	"		
			N_2H_4	"	0.54	"		
			SO_4^{--}	"	7.56	"		
			Conductivity	Conductivity meter	110	μℭ/cm		

Plant	Sample	Sampling Point	Analysis Item	Analysis Method	Analysis Result		Remarks (Spec.)	
Urea	Drum		pH	pH meter	9.70			1/DAY
			P-value	Titration method	0.80	mg/l		
			M-value	"	1.10	"		
			N_2H_4	Colorimetric	0.13	"		
			SO_4^{--}	"	27.00	"		
			P_2S_5	"	0.78	"		
			Conductivity	Conductivity meter	370.0	μ℧/cm		
Sulphuric Acid	Drum water		pH	pH meter	11.20			1/DAY
			P-value	Titration	12.40	mg/l		
			M-value	"	13.25	"		
			Ditto	Winkler	0	"		
			N_2H_4	Colorimetric	1.13	"		
			SO_4^{--}	"	180.0	"		
			Conductivity	Conductivity	3500	μ℧/cm		
			P_2O_5	Colorimetric	8.42	mg/l		
Feed water	Steam-Condensate	"	pH	pH meter	7.80			1/DAY
			NH_3	Nesseller method	0	mg/l		

Plant	Sample	Sampling Point	Analysis Item	Analysis Method	Analysis Result		Remarks (Spec.)	
Ammonium Sulphate	A.S waste water	A.S pond	pH	pH meter	8.40			1/DAY
			Conductivity	Conductivity	10000	µ℧/cm		
	N.P waste water	N.P pond	pH	pH meter	8.10			1/DAY
				Conductivity	8000	µ℧/cm		
Urea Plant	Prilled Fertilizer Grade		N_2 total	Kjeldahl	45.53	%	% N≥46	1/DAY
			Biuref	$CuSO_4$	0.9	"	% Biuret ≤ 1	
			Moisture	Gravimetric	0.48	"	% Moisture ≤ 1	
			Size	Screening	<1mm = 2.0 "			
					1-2mm = 84.0 "			
					1-2.4mm = 98.0 "			
					>2.4mm = 0.0 "			
			F-NH_3	Titration	0.03	%		
	Urea Solution	Urea solution behind separator I	NH_3	Volumetric	21.49	%		1/DAY
			CO_2	"	14.05	"		
			Urea	Gravimetric	48.54	"		

Plant	Sample	Sampling Point	Analysis Item	Analysis Method	Analysis Result		Remarks (Spec.)	
Urea Plant	Urea solution (cont'd)	Urea solution behind separator II	NH_3	Titrating	3.05	%		1/DAY
			CO_2	Volumetric	1.45	"		
			Urea	Gravimetric				
		Calbamate solution outlet wash column	NH_3	Gravimetric	35.16	%		1/DAY
			CO_2	"	27.65	"		
		Urea storage tank	NH_3	Gravimetric	1.44	%		1/DAY
			CO_2	"	0.72	"		
		NH_3, CO_2 gas behind separator II (collecting line to ammonium sulfate plant)	NH_3	Gravimetric	50.44	%		1/DAY
			CO_2	"	36.28	"		
Sulphuric Acid	H_2SO_4	$(NH_4)_2SO_4$	H_2SO_4	Titration	98.4	%	98%≥	1/DAY

Plant	Sample	Sampling Point	Analysis Item	Analysis Method	Analysis Result		Remarks (Spec.)	
Sulphuric Acid	H_2SO_4 (cont'd)	Absorber	Total - Fe	Colorimetric	105	mg/l		
		Dryer	SO_2	Iodine titration	10.5	"		
Ammonium sulphate plant	$(NH_4)_2SO_3$		N_2	Volumetric	27.0	%	%N ≥ 21	1/DAY
			H_2O	Gravimetric	0.059	"	moisture ≤ 1	
			Free-Acid	Volumetric	0.024	"	free H_2SO_4 ≤ 0.5	
	Saturate-Lye	Saturator	Free-Acid	Titration	0.85	%		1/DAY
			P_2O_5	Colorimeter	0.0046	"		
			Fe^{+2}	"	12	r.p.m		
			Fe^{+3}	"	1.5	"		
			Density		1.255			

SECTION 10

POSTSCRIPT

Section 10 Postscript

10-1 Explanation of Report

In Section 2 Process of Mae Moh Factory of this report, considerable many pages are spared for the process explanation. This might be considered as being slightly deviated from the original purpose of this report.

However, the reason of our venture to explain this process is for intending the followings and we are hoping to be understood for our true intention.

(1) Without explanation of §2, thorough explanations for §3 Conclusion of Survey Team and §4 Result of Survey cannot be made.

(ii) It is intended to save loss time of at least 3 months by using this report, for the specialists or engineers to be despatched to Mae Moh Factory from Japan in future.

(iii) It is expected that the section will be useful for the training of common staffs as operators, etc., of Mae Moh Factory.

In addition, detailed reports are indicated for machinery, measurement, electricity and analysis. These are provided, especially considering the effective use of this report by the Engineers of Mae Moh Factory.

The intention of attachment of equipment list is the same as above, and this list is indespensable for PM execution while it is stated in this report that the PM is necessary for rehabilitation of Mae Moh Factory. It is expected to realize further improvement of this equipment list by Mae Moh Factory.

10-2 Gratitude

We would like to express our thanks to all of the staffs of Mae Moh Factory for their active cooperation for our survey of Mae Moh Factory.

Furthermore, express our thanks to all of CFC head office, Japanese Embassy and Japan International Cooperation Agency in Bangkok for their kind consideration during our stay in the Kingdom of Thailand.

As the last, express our thanks to all of the Japan International Cooperation Agency for their kind instructions and consideration to the despatching of survey team and preparation of this report.

APPENDIX

EQUIPMENT LIST

- Vessels List
- Heat Exchangers List
- Compressors/Blowers List
- Pump List

BOILER PLANT	1/3 ∿ 3/3
FEED WATER ADIP PLANT	1/3 ∿ 3/3
AIR SEPARATION PLANT	1/1
GASIFICATION PLANT	1/6 ∿ 6/6
AMMONIA PLANT	1/7 ∿ 7/7
UREA PLANT	1/5 ∿ 5/5
SULPHURIC ACID PLANT	1/4 ∿ 4/4
AMMONIUM SULPHATE PLANT	1/1

TOWER, VESSEL, TANK LIST

ITEM-NO EQUIPMENT	NUMBER	SIZE (mm) HEIGHT & LENGTH	SIZE (mm) OUTSIDE DIA-METER	SIZE (mm) WALL THICK-NESS	PRESSURE (Kg/cm²) OPERA-TION	PRESSURE (Kg/cm²) DESIGN	TEMPERATURE (°C) OPERA-TION	TEMPERATURE (°C) DESIGN	MATERIAL	NOZZLE (mm) INLET	NOZZLE (mm) OUTLET	FLUID	REMARKS
DRUM	2	6,700^{L}	1,400	30		52		270	St35.8/II			STEAM	CAPACITY 26.5 T/H
WATER TUBE (BOTTOM)	2	530^{W}	70	4		"		"	"			HOT WATER	
HEADER	2	3951 4000 4490x2	191	16		"		"	"			"	
WATER TUBE (UPPER)	2	180^{W}	70	4		"		"	"			"	
DESUPER HEATER	2	4,100^{L}	191	CAP 25 16		"		415	"	60$^{\phi}$x8	60$^{\phi}$x8	STEAM HOT WATER	
INNER SHELL OF		TOTAL 3005^{L}	146	4.25				"	"				
DESUPER HEATER		70^{L} 80^{L} 525 2300	(81) (146)	4.25 4.25									
STEAM OUTLET HEADER	2	978	191	16		"		465	15Mo3	60$^{\phi}$x8	150	STEAM	
DEARATOR	2												
1ST SUPER HEATER	2					52		465					
2ND " "	2					52		"					
NO.1∿2 ECONOMIZER	2												
AIR PREHEATER	2												(SPARE YES)

BOILER PLANT 2/3 COMPRESSOR, BLOWER LIST

ITEM-NO EQUIPMENT	NUMBER	COMPRESSOR								MOTOR						REMARKS
		PRESSURE (Kg/cm^2)		TEMPERATURE (°C)		CAPACITY	REVOLUTION	TYPE NO.	FULID	POWER (KW)	VOLT. (V)	AMP. (Amp)	REVOLUTION	TYPE NO.	JOYNT TYPE	
		INLET	OUTLET	INLET	OUTLET	(NM^3/H,Kg/H)	(r.p.m)						(r.p.m)			
1D FAN	2	185/205 mmH_2O		D.T 190		105,000	71.4 KW 760 r.p.m.	WB-ST-S -11-LM -a	WASTE GAS	88	380	120	938	KG1406	COUP-LING	ψ=0.87
1ST AIR FAN	2	ATM	205/225 mmH_2O			25,000	19.2 KW 1,450 r.p.m.	WB-ST-LM- JP 66/960ø	AIR	20.4	380	56	1,450	ADM-4062	"	ψ=0.89
2ND AIR FAN	2	ATM	800/850 mmH_2O			6,100	24.5 KW 2,900 mm	WB-M-LM- 3.0/ 690ø	AIR	33	380	61	2,935	ADM-4002	"	ψ=0.92
STOKER	6									2 HP	380	4.2	1,000			
TRAVELLING GRATE	2															

BOILER PLANT 3/3 PUMP LIST

ITEM-NO EQUIPMENT	NUMBER	PUMP											MOTOR						REMARKS
		PRESSURE (Kg/cm2)		SIZE (mm)		TOTAL-HEAD (M)	CAPA-CITY (M^3/H)	MATERIAL		FULID	TEMPE-RATURE (°C)	SHAFT HORSE POWER (P.S) REVOLUTION (r.p.m.)	POWER (KM)	VOLT (V)	AMP (AMP.)	REVOLU-TION (r.p.m)	TYPE NO.	JOYNT-TYPE	
		IN-LET	OUT-LET	IN-LET	OUT-LET			CAS-ING	IMPELLER SHAFT SLEEVE										
BOILER FEED WATER PUMP	2	0.8	70	100	75	616	49.5	S.C	CARBON STEEL			2930 r.p.m.	132	380	243	2960		COUP-LING	
STEAM TURBINE	2	0.7	70	100	75			"	"			N 3000 3000 r.p.m. TRIP 3450 r.p.m.	130 KW	INLET STEAM 44kg/cm2 450°C OUTLET 3.3kg/cm2		N 10500 r.p.m. TRIP 12100 r.p.m.	GT322		

FEED WATER, ADIP PLANT 1/3

TOWER, VESSEL, TANK LIST

ITEM-NO EQUIPMENT	NUMBER	SIZE (mm)			PRESSURE (Kg/cm^2)		TEMPERATURE (°C)		MATERIAL	NOZZLE (mm)		FLUID	REMARKS
		HEIGHT & LENGTH	OUTSIDE DIA-METER	WALL THICK-NESS	OPERA-TION	DESIGN	OPERA-TION	DESIGN		INLET	OUTLET		
$10^{kg/cm^2}$ COOLER	1	1,775^H	255	6	10	10		429	15MO3	180	180	STEAM HOT WATER	CAPACITY = 110 ℓ
$3.5^{kg/cm^2}$ COOLER	1	1,500^H	368	6	3	3.5	157	190	HII	180 25	180	STEAM HOT WATER	" = 110 ℓ
(812007) REGENERATOR	1	15,650^H	1500	cap 5 6		1.0		150	St37-2 TRAY SUS	150	200 500	ADIP VAPOUR	CAPACITY 26.4 m^3 16 PIECE (DEMISTER REPLACE)
(812005) ABSORBER	1	15,030^H	1900	cap 10 6		1.0		100	St37-2	500 150	500 150	GAS ADIP	CAPACITY 34.2 m^3 WELDING FACTOR μ = 0.8
(812012) SEPARATOR FOR ABSORBER	1	4,800^H	1,300	6		1.5		80	St37-2	500	500	GAS	(DEMISTER REPLACE)
(812009) SCRUBBER	1	14,000^H	1,300	6		1.0		60	St37-2	500 100	500 100	GAS WATER	CAPACITY = 8.0 m^3 (EPOXY COATING AGAIN)
DEARATOR	1												

HEAT EXCHANGER LIST

ITEM-NO EQUIPMENT		NUMBER	FLUID	CAPA-CITY (Kg/H)	TEMPERATURE (°C) INLET	OUT-LET	DE-SIGN	PRESSURE (Kg/cm2) OPERA-TION	DESIGN	TUBE AREA (M2)	SIZE (mm) HEIGHT LENGTH	OUTSIDE DIA-METER	WALL THICK-NESS	MATERIAL	NOZL (mm) INLET	OUTLET	REMARKS
HOT WATER HEAT EXCHANGER	SHELL	1	HOT WATER				177		24		4,924 L	521	COVER 5 7 COVER 8	HII	100	100	μ=0.8 TUBE PLATE 45t
	TUBE		B.F.W				110		6	50	4,100	25	2	ORIGINAL St35.29 SUS304	100	100	
(812003)	SHELL	1	WATER	(V=400ℓ)			120		8		998 H	1020	7	St37-2			
DEPHLEGMATOR	TUBE		SYN.GAS	(V=270ℓ)			120		2		998	25	2	St35.2			TUBE 776 PIECE
(812004) REBOILER	SHELL	1	ADIP				160		1.5		650 L 3470 L	750x1100 1100	CONE 6 5	HI	200	500 150	μ=0.8
	TUBE		STEAM				160		6	91	3000	25	2.6	St35	200	50	TUBE 188 PIECE
(812001) HEAT EXCHANGER	SHELL	1	ADIP							100	1970 H	1450	5				SPIRAL TYPE
	TUBE		ADIP														
"	"	1	"				70		5	80	1870 H	1200	4				"
			"				70		5								
(812006)	SHELL	1	WATER				45		6.2	40	1133 H	1050	4				
COOLER	TUBE		WATER				45		6.2								
(812002) CIRCULATION COOLER	SHELL	2	ADIP						5								
	TUBE		WATER						6								

FEED WATER, ADIP PLANT 3/3

PUMP LIST

ITEM-NO EQUIPMENT	NUMBER	PUMP											MOTOR						REMARKS
		PRESSURE (Kg/cm2)		SIZE (mm)		TOTAL-HEAD (M)	CAPA-CITY (M3/H)	MATERIAL		FULID	TEMPE-RATURE (°C)	SHAFT HORSE POWER (P.S) REVOLUTION (r.p.m.)	POWER (KM)	VOLT (V)	AMP (AMP.)	REVOLU-TION (r.p.m)	TYPE NO.	JOYNT-TYPE	
		IN-LET	OUT-LET	IN-LET	OUT-LET			CAS-ING	IMPELLER SHAFT SLEEVE										
BOILER FEED WATER PUMP	3		31	65	50	390	13.5	S.C	C-S	HOT WATER		2900 r.p.m.	25	380	48	2960		COUP-LING	
STEAM TURBINE FOR B.F.P	1	D.P 28	D.P 3	65	50			"	"	STEAM HOT WATER	D.T 442	N 3000 r.p.m. TRIP 3450 r.p.m.						"	
L.P BOILE FEED WATER PUMP	2		6	40	40	60	7	FC	"	HOT WATER		2.2 PS	3.5	380	6.6	2900		"	
SOFT WATER PUMP	4		6.6	75	65	55	70	"	"	SOFT WATER	25	15.9 KW	22	380	13	2945	OR 1126-2	"	ψ=0.87
"	1			150	125	15	200	"	"	"	25	10.4 KW	15	380	31	1450	OR 1126-4	"	ψ=0.83
COOLING WATER PUMP	3				400	60	1600	"	FC C-S Cu ALLOY	WATER C-S CuALLOY		990 r.p 990 r.p.m.	360	6000	43	990	OR 3124-6B	"	ψ=0.86
(811001∿3) ADIP SOLUTION PUMP	3		6	75	50	45	70	"	C-S	ADIP			13	380	26	2940	OR 1126-2	"	
(811005∿6) PROCESS WATER PUMP	2		3.2	75	50	30	30	"	"	WATER		5.5 PS 2930 r.p.m.	6.5	380	12.3	2935	OR 726-2	"	

AIR SEPARATION PLANT

COMPRESSOR, BLOWER LIST

ITEM-NO EQUIPMENT	NUMBER	COMPRESSOR								MOTOR						REMARKS
		PRESSURE (Kg/cm^2)		TEMPERATURE (°C)		CAPACITY	REVOLUTION	TYPE NO.	FULID	POWER (KW)	VOLT. (V)	AMP. (Amp)	REVOLUTION	TYPE NO.	JOYNT TYPE	
		INLET	OUTLET	INLET	OUTLET	(NM^3/H,Kg/H)	(r.p.m)						(r.p.m)			
AIR TURBO	1	ATM	D.P 5.2			24,400	1,500 r.p.m.	VK25	AIR	2,200	6,000	290	1,500		COUP-LING	$\psi = 0.95$
EXPANSION TURBINE	2					5,130	16,000r.p.m.	ET181		90	380	165	1,480	OR 2026-4	GEAR	
N_2 COMPRESSOR	2						375 r.p.m. S=200									
1 STAGE		1	2.26	25	136	1,928										
2 "		2.26	8.5	39	148	658										
3 "		8.5	24.2	39	138	225										

GASIFICATION PLANT 1/6

TOWER, VESSEL, TANK LIST

ITEM-NO EQUIPMENT	NUMBER	SIZE (mm) HEIGHT & LENGTH	SIZE (mm) OUTSIDE DIAMETER	SIZE (mm) WALL THICKNESS	PRESSURE (Kg/cm^2) OPERATION	PRESSURE (Kg/cm^2) DESIGN	TEMPERATURE (°C) OPERATION	TEMPERATURE (°C) DESIGN	MATERIAL	NOZZLE (mm) INLET	NOZZLE (mm) OUTLET	FLUID	REMARKS
RAW LIGNITE BUNKER	1	$16,300^{H}$	7,500 3,000	500	ATM.				CEMENT			COAL	
HOT GAS PRODUCER	1	$9,350^{H}$	3,010	5 BRICK 250							800	N_2	
ELECTRO FILTER	1												
CYCLONE	2		1,412	6								LIGNITE N_2	
FINISHED DUST BUNKER	1	$6,850^{H}$	5,000	8		D.P $5,000^{mm}$						"	
NITROGEN TANK	2				5000^{mm}							N_2	
GASIFIER	1	$5,926^{L}$	2,910 2,694 2,474	10 12 12				JACKET 250	JACKET WRSt37-2-HI St35.8	100 700	100 1,200	WATER GAS	
SERVICE BIN	2	6730^{H} 850 3,670 1,510 700	2,200 2200x916 916 916x400	cap 10 8 8 7 7					MRSt37-2	410	400	LIGNITE N_2	
WASHER	1	$14,250^{H}$	3,020	7 CONE 12 CASTABLE 75					RSt37-2	900 20^{A}x64^{PIECE}	600 300	GAS WATER	

ITEM-NO EQUIPMENT	NUMBER	SIZE (mm) HEIGHT & LENGTH	SIZE (mm) OUTSIDE DIAMETER	SIZE (mm) WALL THICKNESS	PRESSURE (Kg/cm²) OPERATION	PRESSURE (Kg/cm²) DESIGN	TEMPERATURE (°C) OPERATION	TEMPERATURE (°C) DESIGN	MATERIAL	NOZZLE (mm) INLET	NOZZLE (mm) OUTLET	FLUID	REMARKS
STEAM DRUM	1					29			HII	300 50	 40	STEAM WATER	VOLUME 3,750 ℓ
FINAL COOLER	1	10,350^{H} CONE 2,000^{H}	2,216 2216x420	cap 20 8 CONE 10		3,000^{mm} H_2O			St 00	600 40	600	GAS WATER	RASHING RING 200^{H}x 2
SYNTHESIS FLARE STACK SEAL POT	1	1,200^{H}	1,016	8 BOTTOM 15		3,000^{mm} H_2O			MRSt37-2	400	400 50	GAS WATER	
NITROGEN SEAL POT	1	902^{H}	1,616	8 BOTTOM 20		3,000^{mm} H_2O			"	250	250	N_2	
SYNTHESIS SEAL POT	1	3,258^{H}	2,016	8		3,000^{mm} H_2O			"	600	600	GAS	
NO REMOVAL TANK	2	6,725^{H}	6,000	8 BOTTOM 10		1,000^{mm} H_2O			"	600	600	"	
CASTABLE LINE TUBULAR BOILER WASHER	1	1,500^{L} 625^{L} 5,610^{L}	1400x900 900 920	7 4 7					HI+OASTABLE " "				625L EXPANSION ND 2$^{kg/cm^2}$ INSIDE 103t CASTABLE N=3
GAS LINE PIPE SEAL POT→BOOSTER BOOSTER→ADIP		 40M 150M	 609.6 508	 6 6		1,700^{mm} H_2O			 MRSt37-2				
(742001) SYNTHESIS GAS HOLDER	1												

GASIFICATION PLANT 3/6

HEAT EXCHANGER LIST

ITEM-NO EQUIPMENT		NUMBER	FLUID	CAPA-CITY (Kg/H)	TEMPERATURE (°C)			PRESSURE (Kg/cm2)		TUBE AREA (M2)	SIZE (mm)			MATERIAL	NOZL (mm)		REMARKS
					INLET	OUT-LET	DE-SIGN	OPERA-TION	DESIGN		HEIGHT LENGTH	OUTSIDE DIA-METER	WALL THICK-NESS		INLET	OUTLET	
COOLING WATER COOLER	SHELL	3	SOFT WATER	1200 H 400 W				5	6	49	PLATE TYPE			CARBON STEEL	150	150	
	TUBE		COOLING WATER	84 PIECE					6					SUS304	125	125	
TUBULAR BOILER	SHELL	1	WATER	5,460			235		29		9,800 H 1,550 H	2,100 1,450	CAP 24 25 22 CAP 27 CAP 29 22	17Mn4 HI 17Mn4 HI	200	300	TUBE PLATE 12t
	TUBE		GAS	114 PIECE						190	7,780 L 7,780 L	76.1 76.1	2.9 5.6	st35.8 15 Mo3	600	1,400	94 20 TOTAL 114
RADIATION BOILER	SHELL	1	STEAM	3,460				29							50	150	
	TUBE		GAS														

COMPRESSOR, BLOWER LIST

ITEM-NO EQUIPMENT	NUMBER	COMPRESSOR								MOTOR						REMARKS
		PRESSURE (Kg/cm^2)		TEMPERATURE (°C)		CAPACITY	REVOLUTION	TYPE NO.	FULID	POWER (KW)	VOLT. (V)	AMP. (Amp)	REVOLUTION	TYPE NO.	JOYNT TYPE	
		INLET	OUTLET	INLET	OUTLET	(NM^3/H, Kg/H)	(r.p.m)						(r.p.m)			
RECYCLE VAPOUR FAN	1		D.P 790 mmWS	120		41,400	120 KW 1480 r.p.m.	B2667	DUST N_2	160	380	290	1,485	OR 2424-4	COUP-LING	
RAW MATERIAL BELT CONVEYOR	1					51,970 ℓ 1,000 W 55°4'	20.5 r.p.m.	KZN450	COAL	11	380	22.4	1,450		GEAR	
ELCO BELT	1						BYEL	FA2LC2	COAL	1.1	380	2.8	1,400	OR 424-4	GEAR	
HAMMER MILL	1					2600 ø 2600 W HAMMER 56 PIECE	260 KW 547 r.p.m.		COAL N_2	340	6,000	39	1,492	OR 3024-2B	"	
AIR FAN	1	ATM	D.P 375 mmH_2O	25		11,520	1,460 r.p.m.		AIR	15.5	380		1,460		COUP-LING	
05 CHAIN CONVEYOR	1						4 KW 37.5 r.p.m.		LIGNITE N_2		380		1,430		GEAR	
ROTARY VALVE (CYCLONE)	2					5,000 kg/H	BYEL		"		380				"	
RETURNED VAPOUR FAN	1								"	15	380	31	1,460		COUP-LING	
ROTARY VALVE (FINISHED DUST BUNKER)	1					1,200 kg/H	BYEL	FA31	"	1.5	380	3.7	1,470	OR 426-4	GEAR	
SCREW CONVEYOR (FOR SERVICE BIN)	2						3 KW 52 r.p.m.	2LGI 134	"		380	6.7	1,400		"	

GASIFICATION PLANT 5/6

COMPRESSOR, BLOWER LIST

ITEM-NO EQUIPMENT	NUMBER	COMPRESSOR								MOTOR						REMARKS
		PRESSURE (Kg/cm^2)		TEMPERATURE (°C)		CAPACITY	REVOLUTION	TYPE NO.	FULID	POWER (KW)	VOLT. (V)	AMP. (Amp)	REVOLUTION	TYPE NO.	JOYNT TYPE	
		INLET	OUTLET	INLET	OUTLET	(NM^3/H,Kg/H)	(r.p.m)						(r.p.m)			
CHAIN CONVEYOR (FOR SERVICE BIN)	2						3 KW 52 r.p.m.		LIGNITE N_2		380	6.7	1,400		GEAR	
SCREW FEEDER	4						BYEL	WAG 4	LIGNITE O_2	7.5	380	15.6	1,440	OR 786-4	"	
VAPOUR FAN (CYCLONE)	1		D.P 250 mmH_2O		D.T 120	16,200	14.5 KW 1,460 r.p.m.	B2301-99	LIGNITE N_2	8.5	380	37	1,460	OR 1324-4	COUP-LING	
O_2 BLOWER	2	HOLDER PRESS.	D.P 5,000 mmH_2O		OT 90 D.T 100	5,330	17,464 r.p.m.	RT-P315 G	O_2	110	380	200	2,975	OR 2224-2	GEAR	
N_2 BLOWER	1	"	D.P 6,000 mmH_2O			2,340	880 r.p.m.		N_2	75	380	139	1,480	OR 2024-4	GEAR COUP-LING	
	1	"	D.P 2,700 mmH_2O			474	1450 r.p.m.		"	18.5	"	37	1,460			
WET CONVEYOR	1								SYN.GAS WATER	160	380	290	985		COUP-LING	
GAS BLOWER	2			40		15,400 (0.868 kg/m^3)	60.5 KW 2,970 r.p.m.		SYN. GAS	90	380	165	2,970	OR 2026-2	"	
BOOSTER	4		D.P	66		13,700 (0.996 kg/m^3)	82.5 KW 4,700 r.p.m.		"	110	380	200	2,975		GEAR	

GASIFICATION PLANT 6/6

PUMP LIST

ITEM-NO EQUIPMENT	NUMBER	PUMP											MOTOR						REMARKS
		PRESSURE (Kg/cm2)		SIZE (mm)		TOTAL-HEAD (M)	CAPA-CITY (M3/H)	MATERIAL		FULID	TEMPE-RATURE (°C)	SHAFT HORSE POWER (P.S) REVOLUTION (r.p.m.)	POWER (KM)	VOLT (V)	AMP (AMP.)	REVOLU-TION (r.p.m)	TYPE NO.	JOYNT-TYPE	
		IN-LET	OUT-LET	IN-LET	OUT-LET			CAS-ING	IMPELLER SHAFT SLEEVE										
COOLING WATER PUMP	2 + 1		5	150	125	45	220	FC	CARBON STEEL	WATER	40		4.5	380	84	1470	OR 1726-4	COUP-LING	1SET ENGINE
SPRAY WATER PUMP	2		16	25	25	130	3	"	"	SOFT WATER				380	8.2	2880		"	TYPE TURBINE
WASHING WATER PUMP (FOR ELECTRIC FILTER)	1			40	25	50	10	"	"	WATER			5.5	380	11.3	2930		"	
FUEL OIL PUMP	2		6					"	"	FUEL OIL			0.55	380		1400			

TOWER, VESSEL, TANK LIST

ITEM-NO EQUIPMENT	NUMBER	SIZE (mm) HEIGHT & LENGTH	SIZE (mm) OUTSIDE DIAMETER	SIZE (mm) WALL THICKNESS	PRESSURE (Kg/cm²) OPERATION	PRESSURE (Kg/cm²) DESIGN	TEMPERATURE (°C) OPERATION	TEMPERATURE (°C) DESIGN	MATERIAL	NOZZLE (mm) INLET	NOZZLE (mm) OUTLET	FLUID	REMARKS
(292006) DEMOISTURE	1	24,700H 8,328 1,320 4,600 1,350 9,102	 1,200 1200x1500 1,500 1500x2000 2,000	CAP 12 13 16 16 21 21		24		200	HII	350 100 80 150	200 250	GAS HOT WATER	TOP 1200ø x 7M REPLACED (Aug.,'78) RASHIG RING/3 LAYER x-RAY 25%, 100% =0.9
(292001) SATURATOR	1	20,185H 9,435 1,250 9,500	 1,800 1,100	 19 14 CAP 12		24		200	HII	200 250	200 80	GAS HOT WATER	RASHIG RING 2 LAYERS x-RAY 25%, 100% μ=0.9 (Nov.'77, REPLACED)
(292004) CO CONVERTER	1	8,941H	1,900	24		24		500	13CrMo44	350 "	350 "	GAS "	CATALYST 23,980ℓ x-RAY 100% μ=0.9
(312001) CO_2 SCRUBBER	1	26,673H	2,500	TOP 17 18		23		50	BH36K	500 200	500 200	WATER GAS	TRAY 25 STAGES EPOXY COATING
(312002) FLASH VESSEL	1	5,000L	2,000	20	8	21	50		HII	600	600	WATER	EPOXY COATING
(312013) DEGASIFYING TOWER	1								SEMENT		700 350	WATER CO_2	
(432102) COPPER SOLUTION SCRUBBER	1	20,000H	800	24		120		50	BH36K	80 100	80 50	GAS COPPER SOL'N	CAPACITY 8.4m³ RASHIG RING 1 STAGE X-RAY 100% / ANNEALING
(432103) AMMONIA WATER SCRUBBER	1	15,705H	550	15		120		50	HSB50	80 25	80 50	GAS AMMONIA WATER	RASHIG RING 1 STAGE X-RAY 100%

TOWER, VESSEL, TANK LIST

ITEM-NO EQUIPMENT	NUMBER	SIZE (mm) HEIGHT & LENGTH	SIZE (mm) OUTSIDE DIA-METER	SIZE (mm) WALL THICK-NESS	PRESSURE (Kg/cm²) OPERA-TION	PRESSURE (Kg/cm²) DESIGN	TEMPERATURE (°C) OPERA-TION	TEMPERATURE (°C) DESIGN	MATERIAL	NOZZLE (mm) INLET	NOZZLE (mm) OUTLET	FLUID	REMARKS
(432104) PRESSURE BLAST VESSEL	2	1,905H	323.9	14.2 CAP 15		120		20	HII	100	100	COPPER SLUTION	X-RAY 25%
(432101) OIL SEPARATOR	1	3,960H	620	26		120		50	HII	80	80	GAS	" μ=0.9
(432001) REGENERATOR (FOR COPPER SOLUTION)	1	TOTAL 15,932H											
		(7,726)	1,000	6		0.5		80	SUS304		300	GAS	RASHIG RING (SUS304)
										100		COPPER	1 STAGE
SHELL		(2,000)	1,000	8		3		150	HI	200	50	SDL'N	
TUBE		(2,000)	63.5	3		0.5		150	SUS304				CAPACITY 26.4m³ 70 PIECES
		CONE (1,304)	650	8		0.5							
SHELL		(4,902)	650	8		0.5		80	St37-2	150	150	COPPER SOL'N	
TUBE		(4,225)	51	2.5		0.5		80	SUS304				" 45.5m³ 72 PIECES
(432006) SURGE TANK	1	16,100H	1,400	TOP 6 LOW 10 CAP 12		0.5		80	MRSt37-2 HI	300	150	"	" 16.4m³
AMMONIA RECEIVER	1	5,000L	400	6		20		50	HI	100	65	Liq NH_3	μ=0.8
(522001) FLASH VESSEL	1	4,830H	1,200	13		31		50	HII	125	50	"	X-RAY μ=0.9
(522003) TAIL GAS SCRUBBER	1	8,590H	450	7		30		120	HII	50	50	"	μ=0.8

TOWER, VESSEL, TANK LIST

ITEM-NO EQUIPMENT	NUMBER	SIZE (mm) HEIGHT & LENGTH	SIZE (mm) OUTSIDE DIAMETER	SIZE (mm) WALL THICKNESS	PRESSURE (Kg/cm^2) OPERATION	PRESSURE (Kg/cm^2) DESIGN	TEMPERATURE (°C) OPERATION	TEMPERATURE (°C) DESIGN	MATERIAL	NOZZLE (mm) INLET	NOZZLE (mm) OUTLET	FLUID	REMARKS
(522107) HIGH PRESSURE OIL SEPARATOR	1	3,000H	830	COVER240 65 CAP 160		450		50	24CrMo5	90	90	GAS	X-RAY YES
(522106) HIGH PRESSURE HN_3 SEPARATOR	1	4,950H	1,000	COVER365 60 CAP 102		450		50	42CrMo4	90	90	"	"
(522101) NH_3 SYNTHESIS CONVERTER	1	13,000H	950	COVER285 TOP 250 75 BOTTOM250		450		200	24CrMo5	90 45	200	"	"
(111002) SYNTHESIS GAS COMP. 4TH STAGE SUCTION SEP.	2	1,700H	558	10		24		60	HI	150	200	"	
" 3TH STAGE SEPARATER	2	1,685H	558	10		28		60	HI	125	250	"	
" 4TH STAGE SEPARATER	2	1,750H	406.4	CAP 13 12.7		66		60	HII	67	100	"	
" 5TH STAGE SEPARATER	2	1,950H	TOP 345 323.9	72.5 20		123		60	RSt42-2 St35.8	50	75	"	
" 6TH STAGE SUCTION SEPARATER	2	1,250H	TOP 430 275	123 17.5		121		60	St35.4	175	200	"	
" 6TH STAGE SEPARATER	2	1,959H	TOP 305 244.5	93.5 26		265		60	CK35N St35.8	43.5	50	"	
" 7TH STAGE SEPARATER	2	1,750H	TOP 315 244.5	46		495		60	CK35N St45.8	35	45		

ITEM-NO EQUIPMENT		NUMBER	FLUID	CAPA-CITY (Kg/H)	TEMPERATURE (°C) INLET	OUT-LET	DE-SIGN	PRESSURE (Kg/cm2) OPERA-TION	DESIGN	TUBE AREA (M2)	SIZE (mm) HEIGHT LENGTH	OUTSIDE DIA-METER	WALL THICK-NESS	MATERIAL	NOZL (mm) INLET	OUTLET	REMARKS
(292002) HEAT EXCHANGER I	SHELL	1	SYN.GAS				236		24		3,182 L	700	CAP 15	HII	350	350	μ=0.8
	INNER SHELL										3,182 L	600	CAP 8				EXPANSION 16CrMo4
												TUBE PLATE	3				
													20				
	TUBE		SYN.GAS				410		24	20	2,000 L	26.9	2.3	St35.8/II	350	350	131 PIECES
(292003) HEAT EXCHANGER II	SHELL	1	"				500		24		7,344 L	900	CAP 29	13CrMo44	350	350	x-RAY
													14	15Mo3			μ=0.9
	INNER SHELL										7,344 L	800	CAP 14	15Mo3			EXPANSION 13CrMo44
													4				
	TUBE		"				500		24	150	5,600 L	26.9	2.6	15Mo3	350	350	
(292005) WATER PREHEATER	SHELL	1	"				398		24		COVER 463x2	622	14	HII	350	350	x-RAY
											650 L	630	21				
											5510 L	641	13				
	EXPAN-SION										745 L	636	24				
											292	716	3	16CrMo4/HII			
	TUBE		WATER				200		27	120					250	250	239 PIECES
(292008) COOLER FOR CIRCULATING WATER	SHELL	1	COOLING WATER				100		5		8,430 H	670	COVER 11 6	HII	250	250	
	TUBE		HOT WATER				113		27	175	7,696 L	25	2	st35.29	100	100	301 "
(432007) COPPER SOLUTION COLLER	SHELL	5	COOPER SOL'N				39		45		5,446	318	7.5	st35	80	80	
	TUBE		WATER				100		6		5,000	25	2	"	50	50	54 "
COPPER SOLUTION COLLER	SHELL	1	LQ NH_3				50		20		4,949	700	7	HI	65	150	
	TUBE		COPPER SOL'N				50		6	129	5,000	25	2	st35.8/I			331 "
NH_3 CONDENSER	SHELL	1	NH_3				120		20		5,949	700	8	HI	150	100	
	TUBE		WATER				50		6	164	6,000	25	2	st35.8/I			352 "

HEAT EXCHANGER LIST

ITEM-NO EQUIPMENT		NUMBER	FLUID	CAPA-CITY (Kg/H)	TEMPERATURE (°C) INLET	OUT-LET	DE-SIGN	PRESSURE (Kg/cm2) OPERA-TION	DESIGN	TUBE AREA (M2)	SIZE (mm) HEIGHT LENGTH	OUTSIDE DIA-METER	WALL THICK-NESS	MATERIAL	NOZL (mm) INLET	OUTLET	REMARKS
(522104) WASTE HEAT BOILER	SHELL	1	BOILER WATER	2.6 T/H	80		220	1.5	5		4,150 H	1600	10	HII	25 50	200	x-RAY
	TUBE		SYN.GAS				220		450	75	1,565 M	35	5		90	90	
(522105) GAS COOLER	SHELL	1	WATER				50		5		11,884 H	750	CAP 7 6	HI	200	200	
	TUBE		SYN.GAS NH_3				200		450	120	HEADER 1,340 885 220Mx10	133 44.5 20	23 8 3.6	15Mo3	90	90	
(111002) SYNTHESIS GAS COMPRESSOR	SHELL	2	SYN.GAS				200		3.4		3,300	750	CAP 7 6	HI	400	400	
1ST STAGE COOLER	TUBE		WATER				40		4.6		690	15	1	Cu-P			143 PIECES x 5 SECTION
2ND " "	SHELL	2	GAS				160		11.3		3,472	500	10	HI	250	250	
	TUBE		WATER				40		4.6		690	15	1	Cu-P	100	100	144 PIECES x 4 SECTION
3RD " "	SHELL	2	GAS				150		28		2,400	465	CAP 11 10	HI	250	125	
	TUBE		WATER				39		4.6		1,800	16	1.5	Cu-P	65	65	253 PIECES
4TH " "	SHELL	2	WATER				40		4		5,120	127	4		100	100	
	TUBE		GAS						66	16.1	6,025	76.1	4.5	st35	65	65	15 "
5TH " "	SHELL	2	"				40		4		5,120	114.3	3.6		75	75	
	TUBE		"						123	16.7	6,034	63.5	5.6	st35.8	50	50	18 "
6TH " "	SHELL	2	"				40		4		5,120	114.3	3.6		75	75	
	TUBE		"						265	13.2	6,036	63.5	10	st45.8	43	43	13 "
7TH " "	SHELL	2	"				40		4		5,120	108	3.6		75	75	
	TUBE		"						450	13.5	6,031	60.3	12.5	st45.8	35	35	14 "

ITEM-NO EQUIPMENT	NUMBER	COMPRESSOR								MOTOR						REMARKS
		PRESSURE (Kg/cm^2)		TEMPERATURE (°C)		CAPACITY	REVOLUTION	TYPE NO.	FULID	POWER (KW)	VOLT. (V)	AMP. (Amp)	REVOLUTION	TYPE NO.	JOYNT TYPE	
		INLET	OUTLET	INLET	OUTLET	(NM^3/H, Kg/H)	(r.p.m)						(r.p.m)			
(S21001) GAS CIRCULATING COMPRESSOR	2	D.P 431	D.P 451	70	70	8,220	180 r.p.m		GAS	153	380	280	990	OR-2624-6	FLAT	
AMMONIA COMPRESSOR	2			150	75				NH_3	175	380	310	1490	OR-2426-4	"	
(111002) SYNTHESIS GAS COMPRESSOR	2						3035 PS 250 r.p.m STROK 500			2,500	6000 CYL.DIA	263 PISTON DIA(mm)	250	PFW580 /18-24	COUP-LING	
		MIN	D.P	D.T												
1ST STAGE		200	2.53	35		N 5730			GAS		1055	1052				MAIN METAL 300^{H7}
2ND "		2.5	9.5	"		MAX 6875			"		708	705				CROSS METAL 140^{H7}
3RD "		9.5	24	"					"		415	413				
4TH "		21	56	"		N 6038			"		320	318				
5TH "		56	110	"		MAX 7245			"		215	213				
6TH "		100	234	"		N 5684			"		134	133				
7TH "		222	451	"		MAX 6820			"		94	92				

AMMONIA PLANT 7/7 PUMP LIST

ITEM-NO EQUIPMENT	NUMBER	PUMP											MOTOR						REMARKS
		PRESSURE (Kg/cm2)		SIZE (mm)		TOTAL-HEAD (M)	CAPA-CITY (M3/H)	MATERIAL		FULID	TEMPE-RATURE (°C)	SHAFT HORSE POWER (P.S) REVOLUTION (r.p.m.)	POWER (KW)	VOLT. (V)	AMP (AMP.)	REVOLU-TION (r.p.m)	TYPE NO.	JOYNT-TYPE	
		IN-LET	OUT-LET	IN-LET	OUT-LET			CAS-ING	IMPELLER SHAFT SLEEVE										
COOLING WATER PUMP	2		5.8	250	200		400	F.C	CARBON STEEL	WATER	35	66 KW	75	380	139	1480	ILA2-204	COUP-LING	
(291001) HOT WATER PUMP	2		28	250	250	62	270	SC	"	HOT WATER	170	2900 r.p.m.	64	380	118	2970	OR-2024-2	"	
(291002) WARM WATER PUMP	2		26	75	75			"	"	"			9.5	380	18	2935	OR-884-2	"	
(311001∿2) WATER PUMP	1	0.4	30	250	250		1600	"	"	WATER	35	1480 r.p.m.	1100	6000	127	1490		"	
WATER TURBINE I		22.5	8.5	250	250			FC	SUS C-S	"									
II		8.4	1.6	250	250			"	SUS	"									
(431001) COPPER SOLUTION PUMP	2		120	150	100		33	S.C	C-S	COPPER SOLUTION		190 PS 130 r.p.m.	180	380	330	990	OR-2624-6	FLAT BELT	
(431002) H.P AMMONIA WATER PUMP	2		120	50	25		3	"	"	AMMONIA WATER		17.5 PS 250 r.p.m.	17	380	34	1465	OR-1324-4	"	
(431003) CONDENSATE PUMP	1		120	50	25		1	"	"	WATER		120 r.p.m.	6.8	380	14	1445	IMA2078-4BA	V-BELT	
CONDENSATE PUMP	1		32	50	25		2.8	"	"	"		4.5 PS 220 r.p.m.	5	380	10.5	1445	IMA2072-4BA	"	

ITEM-NO EQUIPMENT	NUMBER	SIZE (mm) HEIGHT & LENGTH	SIZE (mm) OUTSIDE DIA-METER	SIZE (mm) WALL THICK-NESS	PRESSURE (Kg/cm²) OPERA-TION	PRESSURE (Kg/cm²) DESIGN	TEMPERATURE (°C) OPERA-TION	TEMPERATURE (°C) DESIGN	MATERIAL	NOZZLE (mm) INLET	NOZZLE (mm) OUTLET	FLUID	REMARKS
(572101) 2ND REACTOR (LINING)	1	17,950H	1,000	TOP 165 50 5 7	200	230	170	190	WB35 WNr4404	40	40	UREA	X-RAY 100% μ=1.0
(571001) CO_2 COMPRESSOR 4TH STAGE SEPARATOR	1	1,584H	TOP 220 168.3 BOTTOM 40	TOP 525 11		108		MAX 70	MTst42-2 St35.8	35	75	CO_2	
5TH STAGE SEPARATOR	1	2,015H	TOP 310 191	20		230		150	10CrMo10	45	45	CO_2	
(572006) WASHING COLUMN	1	6,820H 4130 750 1940	412 720	6 10 CAP 14		25		150	WNr4550	80 25	80 25	GAS NH_3	
(572001) NH_3 FILTER	2	2,270H	509	10		30	45	100	MRSt37-2	50	50	NH_3	X-RAY 25%
(572005) 1ST STAGE SEPARATOR	1					25			WNr4550				
(572013) DISSOCIATION SEPARATOR	1					3							
(572009) AMMONIA STORAGE	1	3,110L	1,200	CAP 16 14	20	25		45	HII HI	50	40	HN_3	μ=0.8
(572020) SUPPLETION WATER TANK	1	1,500H	1,000	CAP 16 14	25	30	45	60	HII HI	25 15	20	WATER N_2	μ=0.8 .

TOWER, VESSEL, TANK LIST

ITEM-NO EQUIPMENT	NUMBER	SIZE (mm)			PRESSURE (Kg/cm^2)		TEMPERATURE (°C)		MATERIAL	NOZZLE (mm)		FLUID	REMARKS
		HEIGHT & LENGTH	OUTSIDE DIA-METER	WALL THICK-NESS	OPERA-TION	DESIGN	OPERA-TION	DESIGN		INLET	OUTLET		
(572021) STEAM CONDENSATE TANK	1	2,100H	2,200	10		ATM		140	St37-2	50		CONDEN-SATE	
(572031) SEAL TANK FOR CONDENSATE	1	2,300H	500	2		"		45	WNr4550				
(812002) UREA STORAGE TANK	1	5,000L	2,200						WNr4541		25	UREA	(INSIDE U-TUBE)
(812003) UREA FILTER	1	960H	400	3					WNr4541	50	50	UREA	
(572015) ABSORPTION COLUMN	1	2,996H	400	3		0.2		150	WNr4541	100	100	GAS	
(572014) NH_3 CONDENSATE TANK	1	3,178	2,000			ATM							
(812007) 2ND SEPARATOR	1	2,700H	700	6		2		200	WNr4541	200	250		
(812005) SEPARATOR	1												
PRILLING TOWER	1												
CO_2 DRYING ABSORVER	2	3,000L	1,800	8		500mm		160				AIR CO_2	

HEAT EXCHANGER LIST

ITEM-NO EQUIPMENT		NUMBER	FLUID	CAPACITY (Kg/H)	TEMPERATURE (°C) INLET	TEMPERATURE (°C) OUTLET	TEMPERATURE (°C) DESIGN	PRESSURE (Kg/cm2) OPERATION	PRESSURE (Kg/cm2) DESIGN	TUBE AREA (M^2)	SIZE (mm) HEIGHT LENGTH	SIZE (mm) OUTSIDE DIAMETER	SIZE (mm) WALL THICKNESS	MATERIAL	NOZL (mm) INLET	NOZL (mm) OUTLET	REMARKS
(571001) CO_2-COMPRESSOR 4TH STAGE COOLER	SHELL	1	WATER						4		5,120	88.9	3.2	st35	65	65	DOUBLE TUBE TYPE
	TUBE		CO_2						108	3.38	5,336	44.5	4.5	st35.8	35	35	(Aug.'78 REPLACE)
" 3RD STAGE COOLER	SHELL	1	WATER						4		5,120	88.9	3.2	st35	65	65	DOUBLE TUBE TYPE
	TUBE		CO_2						32	9.1	5,331	70	3.6	st35.29	65	65	
(572104) FIRST REACTOR	SHELL	1	STEAM			150	175		3.5		7,193	1500	13	HII	100	100	
	TUBE		UREA			175	190	200	230	12.7	8230x2 5950Vx12	40 25	3.5 3	Nr 4580	33	33	
(812011) CONDENSATOR	SHELL	1	GAS				150	1	2		3,650	550	COVER 5 4	Nr 4541	250	32	
	TUBE		WATER				150	VUCUM	2		2500Vx81	25	2	"	200	200	
(812009) CONDENSATOR 2ND STAGE EVAPORATOR	SHELL	1	GAS				150	1	2		4750	550	COVER 5 4	Nr 4541	250	32	
	TUBE		WATER				150	VUCUM	2		3650Vx81	25	2	"	200	200	
(812004) HEATER 1ST STAGE EVAPORATOR	SHELL	1	STEAM				200		10		2000	450	5	Nr 4404	100	40	
	TUBE		UREA				200	VUCUM		120 PIECE	2000	25	2	"	25	250	
(812006) HEATER 2ND STAGE EVAPORATOR	SHELL	1	STEAM				200		10		2000	273	4	Nr 4404	50	25	
	TUBE		UREA				200	VUCUM		25 PIECE	2000	25	2	"			
(572007) NH_3 CONDENSER	SHELL	1	NH_3				100		25		5235	503	11	st35	125	100	
	TUBE		WATER				100		4	144 PIECE	4500	25	2	st35 8/I	150	150	
(572008) NH_3 CONDENSER	SHELL	1	NH_3				100		25		3000	508	11	st35	125	100	
	TUBE		WATER				100		4	144 PIECE	3000	25	2	st35 8/I	150	150	

COMPRESSOR, BLOWER LIST

ITEM-NO EQUIPMENT	NUMBER	COMPRESSOR								MOTOR						REMARKS
		PRESSURE (Kg/cm^2)		TEMPERATURE (°C)		CAPACITY	REVOLUTION	TYPE NO.	FULID	POWER (KW)	VOLT. (V)	AMP. (Amp)	REVOLUTION	TYPE NO.	JOYNT TYPE	
		INLET	OUTLET	INLET	OUTLET	(NM^3/H, Kg/H)	(r.p.m)						(r.p.m)			
AIR BLOWER	1	ATM	500 mmH_2O			6,720	14 KW 2940 r.p.m.		AIR	19	380	37	2,955	OR-1326-2	COUP-LING	
CO_2 BLOWER	2	HOLDER PRESS.	718 mmH_2O			3,660	2,900 r.p.m.		CO_2	13	380	26	2,940	OR-1126-2	"	
(571001) CO_2 COMPRESSOR	1					2,450	780 P.S 295 r.p.m. STROK 400 mm		CO_2	680	6,000	80	295	CSPRY-487/1820	"	
		D.P	D.P				CYLINDER DIA.	PISTON DIA.								MAIN BEARING
1ST STAGE		718	3.7	37			673 ø	672 ø								236^{H7}
2ND "		3.7	12.9				470	468								CROSS BEARING
3RD "		12.9	27.6				238	236								112^{H7}
4TH "		27.6	93				168	167								
5TH "		93	216		125		70	69								

ITEM-NO EQUIPMENT	NUMBER	PUMP											MOTOR						REMARKS
		PRESSURE (Kg/cm^2)		SIZE (mm)		TOTAL-HEAD (M)	CAPA-CITY (M^3/H)	MATERIAL		FULID	TEMPE-RATURE (°C)	SHAFT HORSE POWER (P.S) REVOLUTION (r.p.m.)	POWER (KM)	VOLT (V)	AMP (AMP.)	REVOLU-TION (r.p.m)	TYPE NO.	JOYNT-TYPE	
		IN-LET	OUT-LET	IN-LET	OUT-LET			CAS-ING	IMPELLER SHAFT SLEEVE										
(571006) H.P FLUSH WATER PUMP	1			20	10	2000	0.5	S.C	3 PLUNGERS	WATER		3.6 KW 155 r.p.m.	4.8	380	11.6	950	OR-726-6	V-BELT	
(571002) AMMONIA PUNGER PUMP	1	21	200	65	40		10	S.C	"	LIQ-NH_3		179 r.p.m.	100	380	190	1488	OR-2244-4	GEAR	
(571006) FEED WATER PUMP	2			25	25	88.1	2.73	S.C	C-S	WATER		2850 r.p.m.	9.5	380	18	2935	OR-824-2	COUP-LING	
(571010) CONDENSATE PUMP	1			25	25	48.1	3.6	F.C	C-S	WATER		2850 r.p.m.	4.6	380	8.8	2935	OR-724-2	"	
(571007) ABSORPTION CIRCULATING PUMP	1			50	50	35.1	16	SUS	SUS	NH_3 WATER		2850 r.p.m.	4.6	380	8.8	2935		"	
(571011) N_2 COMPRESSOR	1			40	15	300	25	S.C	C-S	N_2		1450 r.p.m.	6.8	380	14.1	1445	OR-726-2	"	
(57100) SUPPLETION PUMP	2			25	25	250	1	SUS	SUS (3 PLUNGERS)	CONDEN-SATE		250 r.p.m.	2	380	4.45	1420	OR-523-4	V-BELT	
(811002) UREA SOLUTION PUMP	2			25	25	85	35	SUS	SUS	UREA		2850 r.p.m.						COUP-LING	
(811003) UREA MELTING PUMP	2			50	40	47.5	54	SUS	SUS	UREA		2850 r.p.m.						"	

SULPHURIC ACID PLANT 1/4

TOWER, VESSEL, TANK LIST

ITEM-NO EQUIPMENT	NUMBER	SIZE (mm)			PRESSURE (Kg/cm²)		TEMPERATURE (°C)		MATERIAL	NOZZLE (mm)		FLUID	REMARKS
		HEIGHT & LENGTH	OUTSIDE DIA-METER	WALL THICK-NESS	OPERA-TION	DESIGN	OPERA-TION	DESIGN		INLET	OUTLET		
DRUM	1	3,000L	1,200	CAP 24 17		32		236	17Mn4	100 75	150 75	HOT WATER STEAM	
CONVERTER	1	10,500H	6,036 4,800	8 10						600 620	420 620	GAS "	
DRYING TOWER	1	8,150H	4,420	10		0.3			MSt37	920	1,100		BRICK 80t
ABSORPTION TOWER	1	8,150H	4,420	10		0.3			MSt37	920	1,100		"
ACID TANK	2	7,000H	6,000										

HEAT EXCHANGER LIST

ITEM-NO EQUIPMENT		NUMBER	FLUID	CAPA-CITY (Kg/H)	TEMPERATURE (°C)			PRESSURE (Kg/cm2)		TUBE AREA (M2)	SIZE (mm)			MATERIAL	NOZL (mm)		REMARKS
					INLET	OUT-LET	DE-SIGN	OPERA-TION	DESIGN		HEIGHT LENGTH	OUTSIDE DIA-METER	WALL THICK-NESS		INLET	OUTLET	
WASTE HEAT BOILER	SHELL	1	GAS	8 T/H	100		350		32	280	10150 H	3000	10		1400	1200	
(ECONOMIZER)	TUBE		STEAM							190	1536 M	60.3	3.2	St35.8			
(SUPER HEATER)											2460 M	38	3.6	"			
AIR PREHEATER	SHELL	1	AIR								7725 H	2820	10	MRSt37	1000	1000	CASTABLE 65t
	TUBE		GAS								5570 5570	44.5 44.5	4 4.6		1000	1000	102 PIECES 944 "

SULPHURIC ACID PLANT 3/4

COMPRESSOR, BLOWER LIST

ITEM-NO EQUIPMENT	NUMBER	COMPRESSOR								MOTOR						REMARKS
		PRESSURE (Kg/cm^2)		TEMPERATURE (°C)		CAPACITY	REVOLUTION	TYPE NO.	FULID	POWER (KW)	VOLT. (V)	AMP. (Amp)	REVOLUTION	TYPE NO.	JOYNT TYPE	
		INLET	OUTLET	INLET	OUTLET	(NM^3/H,Kg/H)	(r.p.m)						(r.p.m)			
AIR FAN	2	AIM	1910 mm			25,920	170 KW 1460 r.p.m.		AIR	200	380	370	1480	OR-1992-4D	COUP-LING	

SULPHURIC ACID PLANT 4/4 PUMP LIST

ITEM-NO EQUIPMENT	NUMBER	PUMP											MOTOR						REMARKS
		PRESSURE (Kg/cm2)		SIZE (mm)		TOTAL-HEAD (M)	CAPA-CITY (M3/H)	MATERIAL		FULID	TEMPE-RATURE (°C)	SHAFT HORSE POWER (P.S) REVOLUTION (r.p.m.)	POWER (KM)	VOLT. (V)	AMP (AMP.)	REVOLU-TION (r.p.m)	TYPE. NO.	JOYNT-TYPE	
		IN-LET	OUT-LET	IN-LET	OUT-LET			CAS-ING	IMPELLER SHAFT SLEEVE										
ACID PUMP	8					22	45			ACID		16 PS 1450 r.p.m.							

AMMONIUM SULPHATE PLANT

TOWER, VESSEL, TANK LIST

ITEM-NO EQUIPMENT	NUMBER	SIZE (mm)			PRESSURE (Kg/cm²)		TEMPERATURE (°C)		MATERIAL	NOZZLE (mm)		FLUID	REMARKS
		HEIGHT & LENGTH	OUTSIDE DIA-METER	WALL THICK-NESS	OPERA-TION	DESIGN	OPERA-TION	DESIGN		INLET	OUTLET		
(512001) SATURATOR	2	7,350H	4,000	10		ATM			MRSt37-2	300	150		BRICK 30t x 2 LAYER
(512003) LEY TANK		7,154L	2,800	4									

INSTRUMENT

INSTRUMENT TIME SCHEDULE FOR ANNUAL SHUT DOWN OF MAE MOH FACTORY

1. JUL. 1978

	ITEM	11	12	13	14	15	16	17	18	19	20	21	22	23	24	25	26	27	28	29	30	REMARK
1	Control valve over haul																					
	Gasification LCV-5																					
	to mat pot								take off			put on		Test								
	Feed water PCV-3-65-02																					
	" PCV-3-63-03																					
	" TCV-3-66-01																					
	" TCV-3-66-02																					
	Ammonia PCV-3-29-06																					
	" PCV-3-31-12																					
	" LCV-3-29-02																					
	" LCV-3-52-01																					
	" LCV-3-52-03																					
	H_2CO_3 LCV								to Bangkok													diaphragm change
	A.S PCV-2-51-09																					
	" LCV-2-51-02																					
	" TCV-2-51-09																					
	Feed water LCV																					
2	Thermo recorder over haul																					
	Gasification																					TRA-1, TR-2, TRA-3 TR-23, TR-24, TI-23-1, TI-7
	Sulphuric acid																					TR-868-3-3, TR-868-1-6, TR-861-2
	Controller over haul																					
	Ammonia																					FIC-3-29-03
	Gasification																					PIC-3, PIC-4, PRCA-19, TRC-6A, TIC-6B
	Ammonium sulphate																					PRC-2-51-02, PRC-251-09, TIC-2-51-09
3	Valve Check																					
	Gasification																					41 set
	Feed water																					5 "
	Adip																					3 "
	Egat Boiler																					4 "
	Ammonia																					25 "
	Sulphuric acid																					1 "
	Ammonia sulphate																					4 "
4	Protection tube inspection																					
	Egat Boiler																					TI × 2
	Gasification																					TR-1-3 TR-23-1, TR-23-4, TR-24-3
	Adip																					TR-4-11-01-5, TR-4-11-01-2, TR-4-11-07
	Sulphuric acid																					TI-861-1-1 TI-861-1-10, TI-868-11
	Ammonium sulphate																					TR-01-4, TIC-2-51-09
	Ammonia																					TR-3-29-01-3, TR-3-29-01-8, TR-3-29-01-11, TIC-3-29-04
																						TI-3-43-01-1, TI-3-43-01-4, TI 3-43-01-10, TR-3-52-04-9
5	Dicoprecip cleaning																					LICA-3-29-01, LICA-3-29-02, LICA-3-31-01
6	Change new type																					PT-3-52-09 PT-3-62-04
7	PG & meggering check																					
	Gasification																					.5 set meggering AC 220V line
	Feed water											meggering										10 " "
	Adip																					15 " "
	Egat Boiler																					50 " "
	Ammonia																					20 " "
	Air separation																					20 " "
	Sulphuric acid																					20 " "
	Ammonium sulphate																					80 " "
8	Thermocouple change																					
	Gasification																					TRA-2/1-6, TRA-3/1-6, TR-20/1-6, TR-23/1-4
	Ammonia																					TR-24/1-3, TRA-1/1-6
																						TR-3-29-01/1-12, TR-3-29-02/1-9, TIC-3-29-04
																						TI-3-43-01 1-11, TIC-3-43-02, TIA-3-29-03
	Compensation wire change																					TR-23-1, TRA-1-1 (Gasification)
9	Feed water steam system change																					
	Egat Boiler																					
	Panel preparation																					FCE type 2 set. SCA type 2 set.
	controller "																					Egat Boiler PCV-3-65-01
	control valve "																					Cable 400m
	wiring																					
	1 A line blanch																					5 set
	Transmitter lead pipe																					
	Test																					
10	Ammonia N_2 line change																					
	Panel preparation																					ammonia & Air separation
	controller "																					PIC, FIC
	PT "																					Air separation
	PCV FCV "																					Ammonia & separation
	IA take out																					PCV. PCV PT
	Test																					

Note.

Gasification PT-19 take off & ON, LA-2~6 check FR-16 orifice.

Adip TI-4-11-01-7 TI-4-11-01-8

Ammonia TR-3-52-01 /2~7 check HCV-3-52 /02~08 action test
TI-3-52-01 /2~7 "

Sulphuric acid FI-861-1 orifice

Air separation 4 way valve check (7/19~22)

Egat Boiler change sw at Temp meter oil pump check

GASIFICATION PLANT

TAG. NO.	SERVICE	RANGE	OPERATION VALVE	CONTROLLER OUTPUT	RECORDER	INDICATOR	CONTROLLER	TRANSMITTER	CONTROL VALVE	ALARM	REMARKS
FIC-6A	NO.1 O_2 BLOWER	0~5000 Nm^3/h	2850 Nm^3/h	90%	—	o	o	o	o	—	CONTROLLER OVERHAULED / GOOD
FIC-6B	NO.2 O_2 BLOWER	"	0 STOP	0	—	o	o	o	o	—	CONTROLLER OVERHAULED / GOOD
FR-8	O_2 CONSUMPTION	0~5000 Nm^3/h	2800 Nm^3/h	—	o	—	—	o	—	—	
FR-9 A1	O_2 FLOW BLOW-PIPE 1	0~1500 Nm^3/H	780 Nm^3/H	—	o	o	—	o	—	$\times^H$	
" A2	" BLOW-PIPE 2	"	675 Nm^3/H	—	o	o	—	o	—	$\times^H$	
" B1	" BLOW-PIPE 3	"	600 Nm^3/H	—	o	o	—	o	—	$\times^H$	
" B2	" BLOW-PIPE 4	"	675 Nm^3/H	—	o	o	—	o	—	$\times^H$	
FR-11	O_2 EMERSION SHAFT	0~200 Nm^3/H	130 Nm^3/H	—	—	o	—	o	—	—	
FI-13	COOLING WATER TO THE WASHER	0~200 m^3/H	116 m^3/H	—	—	o	—	o	—	—	

TAG. NO.	SERVICE	RANGE	OPERATION VALVE	CONTROLLER OUTPUT	RECORDER	INDICATOR	CONTROLLER	TRANSMITTER	CONTROL VALVE	ALARM	REMARKS
FI-14A	NO.1 THEISEN WATER	0~30 m^3/H	15 m^3/H	—	—	o	—	o	—	—	
" -14B	NO.2 THEISEN WATER	"	16.2 m^3/H	—	—	o	—	o	—	—	
FI-15	COOLING WATER TO FINAL COOLER	0~20 m^3/H	7 m^3/H	—	—	o	—	o	—	—	
FR-16	SYNTHESIS GAS	0~12500 Nm^3/H	8000 Nm^3/H	—	o	—	—	o	—	—	ORIFICE CLEANED
FI-20	STEAM	0~11000 Nm^3/H	1150 Nm^3/H	—	—	o	—	o	—	—	
FI-21	N_2 GAS	0~300 Nm^3/H	0 Nm^3/H	—	—	o	—	o	—	—	
FI-23	WASHER WATER	0~100 %	46%	—	—	Δ	—	Δ	—	—	

TAG. NO.	SERVICE	RANGE	OPERATION VALVE	CONTROLLER OUTPUT	RECORDER	INDICATOR	CONTROLLER	TRANSMITTER	CONTROL VALVE	ALARM	REMARKS
PIC-3	NO.1 N_2 BLOWER	0~10000 mmWG	7500 mmWG	0%	—	o	o	o	o	—	CONTROLLER OVERHAULED / GOOD
PIC-4	NO.2 N_2 BLOWER	"	0	0	—	o	o	o	o	—	CONTROLLER OVERHAULED / GOOD
PIA-5	N_2 VESSELS	"	5400 mmWG	—	—	o	—	o	—	× H L	
PGA-8A	O_2 BLOWER	0~4 kp/cm^2	1.0 kp/cm^2	—	—	—	—	—	—	× H L	
PGA-8B	"	"	0	—	—	—	—	—	—	× H L	
PRA-10	O_2 MAIN	0~10000 mmWG	5000 mmWG	—	o	—	—	o	—	× H L	
PIA-11A1	O_2 PRESS	0~2500 mmWS	1300 mmWS	—	—	o	—	o	—	× H L	
" A2	"	"	1500 mmWS	—	—	o	—	o	—	× H L	
" B1	"	"	1350 mmWS	—	—	o	—	o	—	× H L	

TAG. NO.	SERVICE	RANGE	OPERATION VALVE	CONTROLLER OUTPUT	RECORDER	INDICATOR	CONTROLLER	TRANSMITTER	CONTROL VALVE	ALARM	REMARKS
PIA-11B2	O_2 PRESS	0~2500 mmWS	1200 mmWS	—	—	o	—	o	—	× H L	
PR-13	IMMERSION SHAFT	-160~0 ~+250 mmWS	+90 mmWS	—	o	—	—	o	—	—	
PRCA-19	SYN GAS BLOWER	-400~0 ~+250 mmWS	+250 mmWS	75%	o	o	o	o	Δ	× H L	CONTROLLER OVERHAULED / GOOD
PRCA-21	SYN GAS BOOSTERS	0~1000 mmWS	+400 mmWS	75%	o	o	o	o	Δ	× H L	
PI-22	SYN GAS BOOSTERS OUT	0~6000 mmWS	2400 mmWS	—	—	o	—	o	—	—	
PGA-23A	WASH SPRAY	0~6 kp/cm^2	5 kp/cm^2	—	—	Δ	—	—	—	× L	
PGA-23B	PUMP HOUSE	"	3 kp/cm^2	—	—	Δ	—	—	—	× L	
PIA-25	SYN GAS SEAL POT	0~1600 mmWS	600 mmWS	—	—	o	—	o	—	× H	
PIA-27	COOLING WATER PUMP	0~10 kp/cm^2	5.2 kp/cm^2	—	—	o	—	—	—	× L	

TAG. NO.	SERVICE	RANGE	OPERATION VALVE	CONTROLLER OUTPUT	RECORDER	INDICATOR	CONTROLLER	TRANSMITTER	CONTROL VALVE	ALARM	REMARKS
PR-35A	SERVICE BIN A	0~1000 mmWS	100 mmWS	—	O	—	—	O	—	—	
PR-35B	" B	"	"	—	O	—	—	O	—	—	

TAG. NO.	SERVICE	RANGE	OPERATION VALVE	CONTROLLER OUTPUT	RECORDER	INDICATOR	CONTROLLER	TRANSMITTER	CONTROL VALVE	ALARM	REMARKS
LICA-5	STEAM DRUM	0~500 mm	250 mm	10%	—	o	o	o	×	× H L	CONTROLLER AND CONTROL VALVE BOTH WERE OVERHAULED CV IS TO BE REDUCED
LA-2+6 I	SERVICE BIN	H 1m L 3m	—	—	—	—	—	Δ	—	Δ H L	"L" ALARM NOT GOOD CHANGE ALL IS BETTER
LA-2+6 II	"	H 1m L 3m	—	—	—	—	—	Δ	—	Δ H L	"L" ALARM NOT GOOD CHANGE ALL IS BETTER
SIA-1 A1	REVOLUTION OF SCREW A1	0 110 u/min	50 u/min	—	—	o	—	o	—	× L	SWITCH NOT GOOD
" A2	" A2	"	"	—	—	o	—	o	—	× L	SWITCH NOT GOOD
" B1	" B1	"	"	—	—	o	—	o	—	× L	SWITCH NOT GOOD
" B2	" B2	"	"	—	—	o	—	o	—	× L	SWITCH NOT GOOD
CO_2R-2	THEISEN OUTLET	0~25 vol%CO_2	—	—	Δ	—	—	×	—	—	TO BE REPLACED
O RA-1	SYN-GAS	0~1 0~5 vol%O_2	—	—	Δ	o	—	×	—	—	TO BE REPLACED

TAG. NO.	SERVICE	RANGE	VALVE OPERATION	ELEMENT	COMPENSATE WIRE	PROTECTION TUBE	RECORDER	INDICATOR	ALARM	REMARKS
TGA-12B	O_2 BLOWER	0~160°C	90°C	o	—	o	—	o	o H	
" -12B	"	"	25°C	o	—	o	—	o	o H	
TR-20/1	O_2 MAIN	0~150°C	85°C	o	o	—	Δ	—	—	ELEMENT CHANGED / OK, RECORDER TO BE REPLACED
" 2										
" 3										
" 4										
" 5										
" 6										
TR-23/1	TUBULER BOILER IN LET	50~1600°C	630°C	o	Δ	o	Δ	—	—	ELEMENT CHANGED / OK, RECORDER TO BE REPLACED
" 2	"	"	"	o	Δ	o	Δ	—	—	
" 3	"	"	"	o	Δ	o	Δ	—	—	
" 4	TUBULER BOILER OUT LET	"	350°C	o	Δ	o	Δ	—	—	
" 5	"	"	"	o	Δ	o	Δ	—	—	
" 6	"	"	"	o	Δ	o	Δ	—	—	

TAG. NO.	SERVICE	RANGE	OPERATION VALVE	ELEMENT	COMPENSATE WIRE	PROTECTION TUBE	RECORDER	INDICATOR	ALARM	REMARKS
TR-24/1	WASHER	0~100°C	62°C	o	o		Δ	—	—	ELEMENT CHANGED / OK AND RECORDER TO BE CHANGED
" 2	FINAL COOLER	"	32	o	o		Δ	—	—	"
" 3	BEFORE ORIFICE	"	51	o	o		Δ	—	—	"
" 4	WASHER	"	62	o	o		Δ	—	—	"
" 5	FINAL COOLER	"	32	o	o		Δ	—	—	"
" 6	BEFORE ORIFICE	"	51	o	o		Δ	—	—	"

TAG. NO.	SERVICE	RANGE	OPERATION VALVE	CONTROLLER OUTPUT	RECORDER	INDICATOR	CONTROLLER	TRANSMITTER	CONTROL VALVE	ALARM	REMARKS
HV-1A1	O_2 GASIFIER IN	0~100%	35%	—	—	o	—	—	o	Δ	SWITCH NOT GOOD / TO BE RENEWED
" -1A2	"	"	24	—	—	o	—	—	o	Δ	"
" -1B1	"	"	40	—	—	o	—	—	o	Δ	"
" -1B2	"	"	15	—	—	o	—	—	o	Δ	"
" -2A1	N_2 GASIFIER IN	0~600 μA	0 %	—	—	o	—	—	o	Δ	"
" -2A2	"	"	0	—	—	o	—	—	o	Δ	"
" -2B1	"	0~100%	0	—	—	o	—	—	o	×	"
" -2B2	"	"	0	—	—	o	—	—	o	×	"
" -3	SYN GAS FLARE	"	0	—	—	o	—	—	o	Δ	"

TAG. NO.	SERVICE	RANGE	OPERATION VALVE	CONTROLLER OUTPUT	RECORDER	INDICATOR	CONTROLLER	TRANSMITTER	CONTROL VALVE	ALARM	REMARKS
HV-4	N_2 SEAL POT IN	0~100 %	100%	—	—	o	—	—	o	Δ	SWITCH NOT GOOD / TO BE RENEWED
" -5	N_2 BY-PASS	"	0	—	—	o	—	—	o	Δ	"
" -6	SYN GAS BLOWER	"	0	—	—	o	—	—	o	Δ	"
" -7A1	PIV-GEAR	0~30 A	6 A	—	—	o	—	—	—	Δ	"
" -7A2	"	"	5.5 A	—	—	o	—	—	—	Δ	"
" -7B1	"	"	5.1 A	—	—	o	—	—	—	Δ	"
" -7B2	"	"	5.5 A	—	—	o	—	—	—	Δ	"
PIA-1	HYDRAULIC OIL	32∿42 kp/cm^2	39 kp/cm^2	—	—	0	—	0	—	$\times^{H}_{L}$	PRESSURE GAUGE TO BE RENEWED

GRINDING PLANT

TAG. NO.	SERVICE	RANGE	OPERATION VALVE	CONTROLLER OUTPUT	RECORDER	INDICATOR	CONTROLLER	TRANSMITTER	CONTROL VALVE	ALARM	REMARKS
FI-1	VAPOUR BLOWER	0~3100 Nm^3/H		—	—	o	—	o	—	—	LEED PIPE NOT GOOD / CLEANING ONCE/YEAR
FI-2	VAPOUR BOOSTER	0~15000 Nm^3/H	7500 Nm^3/H	—	—	o	—	o	—	—	CLEANING ONCE/YEAR
FI-5	COMBUSTION AIR	0~11000 Nm^3/H	4950 Nm^3/H	—	—	o	—	o	—	—	
TRC-6	"	0~5500 Nm^3/H	2750 Nm^3/H	50%	o	—	Δ	o	Δ	—	CONTROLLER IS USED ONLY BY MANUAL
FI-9	BLOWER F5	0~11000 Nm^3/H	7150 Nm^3/H	—	—	o	—	o	—	—	CLEANING ONCE/YEAR
FI-10	N_2 BLOWER	0~8000 Nm^3/H	400 Nm^3/H	—	—	o	—	o	—	—	

TAG. NO.	SERVICE	RANGE	OPERATION VALVE	CONTROLLER OUTPUT	RECORDER	INDICATOR	CONTROLLER	TRANSMITTER	CONTROL VALVE	ALARM	REMARKS
PI-1	OUTLET HOT GAS PRODUCER	-150~0 ~+250 mmWS	±0 mmWS	—	—	o	—	o	—	—	
" -2	DUST SPARATOR	-630~0 ~+400 mmWS	-250 mmWS	—	—	o	—	o	—	—	
PRCA-4	ELECTRO FILTER	-160~0 ~+250 mmWS	+10 mmWS	×	×	o	×	Δ	×	o L	TO BE REPLACED
PDI-10	PRIMARY AIR	0~63 mmWS	60 mmWS	—	—	o	—	o	—	—	
PIA-12	COMBUSTION FUEL	0~250 mmWS	60 mmWS	—	—	o	—	Δ	—	o H	

TAG. NO.	SERVICE	RANGE	OPERATION VALVE	CONTROLLER OUTPUT	RECORDER	INDICATOR	CONTROLLER	TRANSMITTER	CONTROL VALVE	ALARM	REMARKS
LA-3	FINISHED DUST BUNKER	H 4m L 8m	—	—	—	—	—	×	—	H × L	TRANSMITTER TO BE RENEWED
LA-4	LIGHT FUEL OIL TANK		—	—	—	—	—	o	—	Δ L	

TAG. NO.	SERVICE	RANGE	VALVE OPERATION	ELEMENT	WIRE COMPENSATE	TUBE PROTECTION	RECORDER	INDICATOR	ALARM	REMARKS
TRA-1/1	COAL SHAFT	50~750°C	360°C	o	Δ	o	Δ	—	×	RECORDER TO BE RENEWED
" 2	"	"	×	×	Δ	o	Δ	—	×	
" 3	"	"	430	o	Δ	o	Δ	—	×	
" 4	"	"	270	o	Δ	o	Δ	—	×	
" 5	"	"	×	×	Δ	o	Δ	—	×	
" 6	"	"	126°C	o	Δ	o	Δ	—	×	
TR-2/1	SICHTER	0~200°C	126°C	o	o	—	Δ	—	—	ELEMENT CHANGED / RECORDER TO BE RENEWED
" 2	BEHIND SEPARATOR	"	132	o	o	—	Δ	—	—	"
" 3	ELECTRO FILTER	"	130	o	o	—	Δ	—	—	"
" 4	SECONDARY AIR	"	73	o	o	—	Δ	—	—	"
" 5	MIXTURE	"	78	o	o	—	Δ	—	—	"
" 6	SEKUNDUR LUFF	"	137	o	o	—	Δ	—	—	"
TRA-3/1	FINISHED DUST BUNKER 1350mm	0~200°C	82	o	o	—	Δ	—	—	ELEMENT INSTALLED SPACE RECORDER WAS
" 2		"	—	—	—	—	Δ	—	—	REPAIRED AND MOUNTED,
" 3	FINISHED DUST DUNKER 6350mm	"	90	o	o	—	Δ	—	×	YET IT'S BETTER TO BE RENEWED
" 4		"	—	—	—	—	Δ	—	×	
" 5	FINISHED DUST BUNKER 3800mm	"	87	o	o	—	Δ	—	×	
" 6	OUTLET	"	55	o	o	—	Δ	—	×	
TI-7	OUTLET HOT GAS PRODUCER	50~120°C	590°C	o	Δ	—	—	o	—	

TAG. NO.	SERVICE	RANGE	OPERATION VALVE	CONTROLLER OUTPUT	RECORDER	INDICATOR	CONTROLLER	TRANSMITTER	CONTROL VALVE	ALARM	REMARKS
O_2RA-1	HOT GAS PRODUCER	0~21	4.5%	—	×	o	—	o	—	Δ^{H}_{L}	SAMPLING SYSTEM AND SAMPLING PUMP TO BE RENEWED
O_2RA-2	ELECTRO FILTER	"	10	—	×	o	—	o	—	Δ^{H}_{L}	"
O_2RA-3	FINISHED DUST BUNKER	"	0.5	—	×	o	—	o	—	Δ^{H}_{L}	"

TAG. NO.	SERVICE	RANGE	OPERATION VALVE	CONTROLLER OUTPUT	RECORDER	INDICATOR	CONTROLLER	TRANSMITTER	CONTROL VALVE	ALARM	REMARKS
HV-1	BLOWER F2	0~100 %	—	45%	—	o	—	—	o	Δ	SWITCH TO BE RENEWED
" -2	BOOSTER F3	"	—	52	—	o	—	—	o	Δ	"
" -3	ROLLER FEEDER	"	—	35	—	o	—	—	o	Δ	"
" -4	ERKO BELT FEEDER	"	—	54	—	o	—	—	o	Δ	"
" -5	PRIMARY AIR	0~600 μA	—	200 μA	—	o	—	—	o	Δ	"
" -6	SECONDARY AIR	0~100 %	—	20%	—	o	—	—	o	Δ	"
" -7	ELECTRO FILTER OUT	"	—	42	—	o	—	—	o	Δ	"
" -8/1	BEHIND SEPARATOR	"	—	100	—	o	—	—	o	Δ	"
" -8/2	"	"	—	100	—	o	—	—	o	Δ	"

TAG. NO.	SERVICE	RANGE	OPERATION VALVE	CONTROLLER OUTPUT	RECORDER	INDICATOR	CONTROLLER	TRANSMITTER	CONTROL VALVE	ALARM	REMARKS
HV-9	STARTING STACK	0~100 %	—	0%	—	o	—	—	o	Δ	SWITCH TO BE RENEWED
" -10	FLUE GAS	0~600 μA	—	570 μA	—	o	—	—	o	Δ	"
" -11	N_2 INERTISATION	"	—		—	o	—	—	o	Δ	INDICATOR CHANGED / OK SWITCH TO BE CHANGED
HSVA-12	N_2 LINE	0~100 %	—	0%	—	o	—	—	Δ	Δ	SWITCH TO BE CHANGED
FSVA-11	COMBUSTION AIR	SHUT -OPEN	OPEN	—	—	—	—	—	Δ ON-OFF VALVE	—	MAGNET VALVE NOT GOOD
FSV-12	FUEL OIL	SHUT -OPEN	OPEN	—	—	—	—	—	Δ ON-OFF VALVE	Δ	HAND CONTROLED MAGNET VALVE NOT GOOD TO BE REPLACED

FEED WATER PLANT

TAG. NO.	SERVICE	RANGE	OPERATION VALVE	CONTROLLER OUTPUT	RECORDER	INDICATOR	CONTROLLER	TRANSMITTER	CONTROL VALVE	ALARM	REMARKS
FR-3-65-01	30^K STEAM	0~12 t/H	12 t/H	—	Δ	—	—	×	—	—	TRANSMITTER TO BE CHANGED
PRC-3-65-01	30^K STEAM	0~50 kg/cm^2	25 kg/cm^2	35%	o	—	o	o	o	—	CONTROL VALVE, CONTROLLER, RECORDER AND TRANSMITTER CHANGED
PRC-3-65-02	10^K STEAM	0~15 kg/cm^2	7 kg/cm^2	90%	o	—	o	o	o	—	CONTROLLER, RECORDER AND TRANSMITTER CHANGE CONTROL VALVE OVERHAULED / GOOD
PRC-3-65-03	3^K STEAM	0~5 kg/cm^2	2.8 kg/cm^2	100%	Δ	—	o	o	o	—	TRANSMITTER, CONTROLLER CHANGED CONTROL VALVE OVERHAULED / GOOD
PC-3-65-10	DEAREATOR	—	—	—	—	—	—	—	Δ	—	CONTROL SYSTEM TO BE CHANGED
PIA-3-65-13	STEAM TURBINE	0~63 kg/cm^2	30 kg/cm^2	—	—	o	—	—	—	—	
PIA-3-65-05	STEAM	"	15 kg/cm^2	—	—	o	—	—	—	—	

TAG. NO.	SERVICE	RANGE	OPERATION VALVE	CONTROLLER OUTPUT	RECORDER	INDICATOR	CONTROLLER	TRANSMITTER	CONTROL VALVE	ALARM	REMARKS
PIA-3-65-02	10^K STEAM	0~25 kg/cm^2	8 kg/cm^2	—	—	o	—	—	—	o	
PIA-3-65-03	3^K STEAM	0~10 kg/cm^2	3 kg/cm^2	—	—	o	—	—	—	o	
PIA-3-65-04	DEAREATOR	0~1 kg/cm^2	0.2 kg/cm^2	—	—	o	—	—	—	o	TRANSMITTER, INDICATOR NEWLY INSTALLED
LIC-3-65-01	DEAREATOR	0~1200 mm	800 mm	25%	o	—	o	o	Δ	—	TRANSMITTER, CONTROLLER CHANGED

TAG. NO.	SERVICE	RANGE	OPERATION VALVE	CONTROLLER OUTPUT	RECORDER	INDICATOR	CONTROLLER	TRANSMITTER	CONTROL VALVE	ALARM	REMARKS
TIC-3-65-01	10^K STEAM	0~250 °C	200°C	0%	—	o	o	×	Δ	—	CONTROLLER RENEWED TRANSMITTER NOT GOOD
TC-3-65-02	3^K STEAM	0~250 °C	150°C	ON,OFF	—	—	×	×	×	—	CONTROL VALVE OVERHAULED TRANSMITTER OVERHAULED } / NOT GOOD
TIA-3-65-04	OUTLET PIPE	0~250 °C	170°C	—	—	o	—	—	—	o	
TIA-3-65-05	"	0~200 °C	140°C	—	—	o	—	—	—	o	
TR-3-65-03	30^K STEAM	0~600 °C	400°C	—	×	—	—	—	—	—	RECORDER NOT GOOD RECORDER AND COMPENSATE WIRE TO BE RENEWED

AIR SEPARATION PLANT

TAG. NO.	SERVICE	RANGE	OPERATION VALVE	CONTROLLER OUTPUT	RECORDER	INDICATOR	CONTROLLER	TRANSMITTER	CONTROL VALVE	ALARM	REMARKS
FR-1	AIR INLET APPARATUS	0~40000 Nm^3/H	29000 Nm^3/H	—	o	—	—	o	—	—	RECORDER OVERHAULED / OK TRANSMITTER ZERO ADJUSTED / OK
FR-2	O_2 PRODUCT	0~5000 Nm^3/H	3350 Nm^3/H	—	o	—	—	o	—	—	
FR-3	N_2 PRODUCT	0~4000 Nm^3/H	3100 Nm^3/H	—	o	—	—	o	—	—	

TAG. NO.	SERVICE	RANGE	OPERATION VALVE	CONTROLLER OUTPUT	RECORDER	INDICATOR	CONTROLLER	TRANSMITTER	CONTROL VALVE	ALARM	REMARKS
LRA-2	CONDENSATE TANK	0~2500 mm	2000 mm	—	O	—	—	O	—	O	
LIC-4	SPRAY COOLER CC	0~500 mm	260 mm	10%	—	O	O	O	O	—	CONTROL VALVE OVERHAULED / GOOD
LIC-7	EVAPORATION COOLER CE	0~1000 mm	560 mm	5%	—	O	O	O	O	—	CONTROL VALVE OVERHAULED / GOOD

TAG. NO.	SERVICE	RANGE	OPERATION VALVE	CONTROLLER OUTPUT	RECORDER	INDICATOR	CONTROLLER	TRANSMITTER	CONTROL VALVE	ALARM	REMARKS
P1-1	REGEN R1	0~10 kp/cm^2	5.0 kp/cm^2	—	—	o	—	—	—	—	
" -2	REGEN R2	"	5.0 kp/cm^2	—	—	o	—	—	—	—	
" -3	REGEN R3	"	4.9 kp/cm^2	—	—	o	—	—	—	—	
" -4	REGEN R4	"	4.9 kp/cm^2	—	—	o	—	—	—	—	
" -5	PRESS. COL. C1	"	4.9 kp/cm^2	—	—	o	—	—	—	—	
" -6	PRESS COL. C2	0~1 kp/cm^2	0.47 kp/cm^2	—	—	o	—	—	—	—	
" -7	INLET TUBE AT1	0~10 kp/cm^2	4.7 kp/cm^2	—	—	o	—	—	—	—	
" -8	INLET TUBE AT2	"	0 kp/cm^2	—	—	o	—	—	—	—	
" -11	O2-AFTER EVAP. AE	0~1600 mmWS	460 mmWS	—	—	o	—	—	—	—	

TAG. NO.	SERVICE	RANGE	OPERATION VALVE	CONTROLLER OUTPUT	RECORDER	INDICATOR	CONTROLLER	TRANSMITTER	CONTROL VALVE	ALARM	REMARKS
PIA-14	OUTLET O_2 PUMP AP	0~4 kp/cm^2	2.0 kp/cm^2	—	—	o	—	—	—	o	
PI-15	AIR INLET APPARATUS	0~15 kp/cm^2	5.0 kp/cm^2	—	—	o	—	—	—	—	
" -16	N_2 PRODUCT	0~1600 mmWS	830 mmWS	—	—	o	—	—	—	—	
" -17	O_2 PRODUCT	"	350 mmWS	—	—	o	—	—	—	—	
PIC-8-21 -01	N_2 COMPer BY PASS	0~40 kg/cm^2	20.5 kg/cm^2	30%	—	o	o	o	o	—	THIS AUTOMATIC CONTROL SYSTEM NEWLY INSTALLED.

TAG. NO.	SERVICE	RANGE	OPERATION VALVE	CONTROLLER OUTPUT	RECORDER	INDICATOR	CONTROLLER	TRANSMITTER	CONTROL VALVE	ALARM	REMARKS
HC-1	LIQUID O_2 AFTER E2	0~100%	—	75%	—	O	—	—	O	—	
HC-2	LIQUID N_2 AFTER E3	"	—	65%	—	O	—	—	O	—	
HC-3	EVAPORATOR	"	—	25%	—	O	—	—	O	—	

TAG. NO.	SERVICE	RANGE	VALVE OPERATION	ELEMENT	WIRE CONPENSATE	TUBE PROTECTION	RECORDER	INDICATOR	ALARM	REMARKS
TI-1	REGEN R1	-200~+50 0~+200°C	-104 °C	o	o	—	—	o	—	
" -2	" R2	"	-106	o	o	—	—	o	—	
" -3	" R3	"	-107	o	o	—	—	o	—	
" -4	" R4	"	-108	o	o	—	—	o	—	
" -5	VALVE BOX V1	"	-170	o	o	—	—	o	—	
" -6	" V2	"	-167	o	o	—	—	o	—	
" -7	" V3	"	×	×	o	—	—	o	—	
" -8	" V4	"	-174	o	o	—	—	o	—	
" -9	AIR AFTER TUBE. COILS	"	-142	o	o	—	—	o	—	
" -10	AIR BEFORE TUBE. INES	"	-142	o	o	—	—	o	—	
" -11	AIR BEFORE TURB. AT1	"	-142	o	o	—	—	o	—	
" -12	AIR AFTER TURB. AT1	"	-147	o	o	—	—	o	—	
" -13	AIR BEFORE TURB. AT2	"	+25	o	o	—	—	o	—	
" -14	AIR AFTER TURB. AT2	"	+25	o	o	—	—	o	—	
" -15	O_2 EVAP. AE	"	+28	o	o	—	—	o	—	
" -16	LIQUID O_2 AFTER E2	"	-186	o	o	—	—	o	—	
" -17	IMPURE N_2 AFTER E2	"	-178	o	o	—	—	o	—	
" -18	IMPURE N_2 AFTER E1	"	-177	o	o	—	—	o	—	
" -19	PURE N_2 AFTER E3	"	-178	o	o	—	—	o	—	

TAG. NO.	SERVICE	RANGE	OPERATION VALVE	ELEMENT	COMPENSATE WIRE	PROTECTION TUBE	RECORDER	INDICATOR	ALARM	REMARKS
TI-20	LIQUID N_2 AFTER E3	-200~+50°C 0~+200°C	-183°C	O	O	—	—	O	—	
" -21	AIR INLET APPARATUS	"	+27	O	O	—	—	O	—	
" -22	PURE N_2 PRODUCT	"	+21	O	O	—	—	O	—	
" -23	PURE O_2 PRODUCT	"	+29	O	O	—	—	O	—	
" -24	IMPURE N_2 OUTLET	"	+28	O	O	—	—	O	—	
" -25	O_2 AFTER EVAP. AE	"	+35	O	O	—	—	O	—	
" -26	HEATING OUTLET A2	"	+25	O	O	—	—	O	—	
" -27	HEATING OUTLET A1	"	+25	O	O	—	—	O	—	
" -28	BEARING TURB. AT1	"	+46	O	O	—	—	O	—	
" -29	"	"	+56	O	O	—	—	O	—	
" -30	BEARING TURB. AT2	"	+25	O	O	—	—	O	—	
" -31	"	"	+25	O	O	—	—	O	—	
TR-3/1	REGENERATOR 1 Mitte	-170~-50°C	-114°C	O	O	—	—	O	—	
" 2	REGENERATOR 2 Mitte	"	-123	O	O	—	—	O	—	
" 3	REGENERATOR 3 Mitte	"	-108	O	O	—	—	O	—	
" 4	REGENERATOR 4 Mitte	"	-110	O	O	—	—	O	—	
" 5	Luff aus REGENERATOR	"	-169	O	O	—	—	O	—	
" 6	Luff Vorden Turbinen	"	-167	O	O	—	—	O	—	

ADIP PLANT

TAG. NO.	SERVICE	RANGE	OPERATION VALVE	CONTROLLER OUTPUT	RECORDER	INDICATOR	CONTROLLER	TRANSMITTER	CONTROL VALVE	ALARM	REMARKS
FRC-4-11-01	IN ABS ADIP	0~10x9 m^3/H	45 m^3/H	30%	Δ	—	o	o	o	—	
FRC-4-11-03	REBOILER	0~ 10x9 T/H	3.7 T/H	30%	Δ	—	o	o	o	—	CONTROL VALVE OVERHAULED / GOOD
FI-4-11-04	COOLING WATER	0~35 T/H	10 T/H	—	—	o	—	o	—	—	
PIA-4-11-15	INST AIR	0~10 kg/cm^2	3.5 kg/cm^2	—	—	o	—	—	—	o	
LIA-4-11-12	ABSORBER		×	—	—	×		×	—	×	
LICA-4-11-02	ABSORBER	0.2~ 1.0 K	0.6 kg/cm^2		—	o	o	o	o	$\times^{H}_{L}$	
LIA-4-11-03	REGENERATOR	0~100%	50%	—	—	o	—	—	—	$\times^{H}_{L}$	
LA-4-11-01	SCRUBER		—	—	—	—	—	o	—	×	

TAG. NO.	SERVICE	RANGE	OPERATION VALVE	ELEMENT	COMPENSATE WIRE	PROTECTION TUBE	RECORDER	INDICATOR	ALARM	REMARKS
TR-4-11-01 /1	ADIP SOLUTION	0~200°C	48°C	P+100 Δ	Δ	—	×	—	—	RECORDER TO BE RENEWED
2	SYNTHESIS GAS	"	65°C	Δ	Δ	o	×	—	—	PROTECTION TUBE INSPECTED / GOOD
3	ADIP SOLUTION	"	30°C	Δ	Δ	—	×	—	—	
4	"	"	47°C	Δ	Δ	—	×	—	—	
5	"	"	82	Δ	Δ	o	×	—	—	PROTECTION TUBE INSPECTED / GOOD
6	"	"	96	Δ	Δ	—	×	—	—	
7	REGENERATOR ACID GAS	"	72°C	Δ	Δ	o	×	—	—	PROTECTION TUBE INSPECTED / GOOD
8	ADIP SOLUTION	"	34	Δ	Δ	o	×	—	—	"
9	"	"	104	Δ	Δ	—	×	—	—	
10	STEAM	"	147°C	Δ	Δ	—	×	—	—	
11	SPARE	"	—	—	—	—	×	—	—	
12	"	"	—	—	—	—	×	—	—	

AMMONIA PLANT

TAG. NO.	SERVICE	RANGE	OPERATION VALVE	CONTROLLER OUTPUT	RECORDER	INDICATOR	CONTROLLER	TRANSMITTER	CONTROL VALVE	ALARM	REMARKS
FR-3-29-01	GAS OUTLET CO-CONVERSION	0~25000 Nm^3/H	18000 Nm^3/H	—	o	—	—	o	—	—	
FRC-3-29-02	STEAM INLET CO-CONVERSION	0~9000 kg/H	6390 kg/H	25%	o	—	o	o	o	—	CONTROL VALVE OVERHAULED / GOOD
FI-3-29-03	HOT WATER TO SATURATOR	0~150 m^3/H	105 m^3/H	—	—	o	—	o	—	—	
FIC-3-29-04	CIRCULATING WATER TO DEMOISTURE	0~40 m^3/H	29.6 m^3/H	50%	—	o	o	o	o	—	CONTROL VALVE OVERHAULED / GOOD
FIC-3-29-05	WATER FROM TO SATURATOR TO DEMOISTURE	0~120 m^3/H	81.6 m^3/H	30%	—	o	o	o	o	—	CONTROLLER OVERHAULED / GOOD
FIC-3-29-06	WARM WATER TO DEMOISTURE	0~30 m^3/H	13.5 m^3/H	25%	—	o	o	o	o	—	
FR-3-31-01	GAS OUTLET CO_2-REMOVAL	0~15000 Nm^3/H	12900 Nm^3/H	—	o	—	—	o	—	—	
FI-3-31-02	WATER TO SCRUBBER	0~2300 Nm^3/H	1080 Nm^3/H	—	—	o	—	o	—	—	CONTROL VALVE OVERHAULED / GOOD
FRC-3-31-03	N_2 TO CONVERTER GAS	0~3000 Nm^3/H	2100 Nm^3/H	50%	o	o	o	o	o	—	CONTROLLER and CONTROL VALVE INSTALED TRANSMITTER ΔP CHANGED (3600 mmWS → 1296 mmWS, 5000 Nm^3/H → 3000 Nm^3/H)

TAG. NO.	SERVICE	RANGE	OPERATION VALVE	CONTROLLER OUTPUT	RECORDER	INDICATOR	CONTROLLER	TRANSMITTER	CONTROL VALVE	ALARM	REMARKS
FR-3-43-01	SYN GAS QUANTITY	0~20000 Nm^3/H	10600 Nm^3/H	—	o	—	—	o	—	—	
FI-3-43-02	QUANTITY OF RETURN-GAS	0~1200 Nm^3/H	0 Nm^3/H	—	—	o	—	o	—	—	
FR-3-52-01	NH_3 CONV INLET	0~100000 Nm^3/H	51000 Nm^3/H	—	o	—	—	o	—	—	TRANSMITTER ΔP CHECKED / GOOD
FIA-3-52-01/B	"	0~26300 Nm^3/H	OVER SCALE	—	—	o	—	o	—	o	LOW ANN TRANSMITTER ΔP CHECKED / GOOD
FR-3-52-03	OUTLET FLOW TAIL GAS SCRUBBER	0~1200 Nm^3/H	672 Nm^3/H	—	o	—	—	o	—	—	

TAG. NO.	SERVICE	RANGE	OPERATION VALVE	CONTROLLER OUTPUT	RECORDER	INDICATOR	CONTROLLER	TRANSMITTER	CONTROL VALVE	ALARM	REMARKS
LICA-3-29-01	SATURATOR	0~1500 mm	1080 mm	20%	—	O	O	O	O	H O L	CHAMBER CLEANED / GOOD
LICA-3-29-02	DEMOISTURE	"	1020 mm	75%	—	O	O	O	O	H O L	CONTROL VALVE OVERHAULED / GOOD CHAMBER CLEANED / GOOD
LIA-3-29-04	TOP SATURATOR	0~1400 mm	1400 mm	—	—	O	—	O	—	H O L	
LICA-3-31-01	PRESSURE WATER SCRUBBER	0~1500 mm	1020 mm	25%	—	O	O	O	O	H O L	CHAMBER CLEANED / GOOD
LIA-3-31-02	"	0~1000 mm	1000 mm	—	—	O	—	O	—	H O L	
LIA-3-31-05	FLASH VESSEL	"	500 mm	—	—	O	—	O	—	H O L	
LICA-3-43-01	COPPER SOLUTION IN SCRUBBER	"	580 mm	75%	—	O	O	O	O	H O L	
LIA-3-43-02	"	"	590 mm	—	—	O	—	O	—	H O L	
LICA-3-43-03	NH_3 WATER IN SCRUBBER	"	560	5%	—	O	O	O	O	H O L	

TAG. NO.	SERVICE	RANGE	OPERATION VALVE	CONTROLLER OUTPUT	RECORDER	INDICATOR	CONTROLLER	TRANSMITTER	CONTROL VALVE	ALARM	REMARKS
LIA-3-43-04	NH_3 WATER IN SCRUBBER	0~1000 mm	580 mm	—	—	o	—	o	—	o^H_L	
LI-3-43-06	SURGE TANK	0~2250 mm	—	—	—	Δ	—	×	—	—	THERE IS NO TRANSMITTER
LICA-3-52-01	NH_3 SEPARATOR	0~1000 mm	580 mm	40%	—	o	o	o	o	o^H_L	CONTROL VALVE OVERHAULED / GOOD
LIA-3-52-02	"	"	660 mm	—	—	o	—	o	—	o^H_L	
LICA-3-52-03	NH_3 FLASH VESSEL	"	500 mm	75%	—	o	o	o	o	o^H_L	CONTROL VALVE OVERHAULED / GOOD
LICA-3-52-04	TAIL GAS SCRUBBER	"	250 mm	10%	—	o	o	o	o	o^H_L	
LICA-3-52-05	WASTE HEAT BOILER	0~750 mm	430 mm	25%	—	o	o	o	o	o^H_L	
LI-3-74-01	SYN GAS HOLDER	0~6000 m^3	5100 m^3	—	—	o	—	o	—	—	

TAG. NO.	SERVICE	RANGE	OPERATION VALVE	CONTROLLER OUTPUT	RECORDER	INDICATOR	CONTROLLER	TRANSMITTER	CONTROL VALVE	ALARM	REMARKS
PR-3-29-02	GAS OUTLET CO-CONVERSION	0~40 kp/cm^2	20 kp/cm^2	—	o	—	—	o	—	—	
PR-3-29-08	STEAM INLET CO-CONVERSION	"	23 kp/cm^2	—	o	—	—	o	—	—	
PaIA-3-31-02	PRESSURE WATER SCRUBBER	0~5000 mmws	1600 mmws	—	—	o	—	o	—	o H	
PR-3-31-04	GAS OUTLET CO_2-REMOVAL	0~40 kp/cm^2	19.5 kp/cm^2	—	o	—	—	o	—	—	
PRC-3-31-12	GAS FROM FLASH VESSEL	0~16 kp/cm^2	7.7 kp/cm^2	40%	o	—	—	o	—	—	CONTROL VALVE OVERHAULED / GOOD
PR-3-31-17	N_2 TO CONVERTER GAS	0~40 kp/cm^2	19.5 kp/cm^2	—	o	—	—	o	—	—	
PR-3-43-02	PRESSURE AFTER CUS SCRUBBER	0~160 kp/cm^2	102 kp/cm^2	—	—	o	—	o	—	—	
PI-3-43-04	PRESSURE AFTER RETURN GAS	0~630 mmws	410 mmws	—	—	o	—	o	—	—	
PI-3-52-02	SYN GAS INLET	0~630 kp/cm^2	315 kp/cm^2	—	—	o	—	o	—	—	

TAG. NO.	SERVICE	RANGE	OPERATION VALVE	CONTROLLER OUTPUT	RECORDER	INDICATOR	CONTROLLER	TRANSMITTER	CONTROL VALVE	ALARM	REMARKS
PI-3-52-04	SYN GAS INLET	0~630 kp/cm^2	315 kp/cm^2	—	—	o	—	o	—	—	TRANSMITTER CHANGED TO NEW TYPE
PR-3-52-09	INLET CONVERTER	"	330 kp/cm^2	—	o	—	—	o	—	—	TRANSMITTER CHANGED TO NEW TYPE
PI-3-52-11	PRESSURE IN FLASH VESSEL	0~63 kp/cm^2	29 kp/cm^2	—	—	o	—	o	—	—	
PRC-3-52-12	OUTLET TAIL GAS SCRUBBER	"	28.5 kp/cm^2	15%	o	—	o	o	o	—	
PIA-3-52-14	Ins.T AIR	0~10 kp/cm^2	3.5 kp/cm^2	—	—	o	—	—	—	o L	
TIC-3-29-04	GAS OUTLET HEAT EXCHANGER I	0~400 °C	240°C	100%	—	o	o	o	Δ	—	POWER CYLINDER TO BE CHANGED (TWO SET)
TIC-3-43-02	INLET SURGE TANK	0~100 °C	75°C	50%	—	o	o	o	o	—	

TAG. NO.	SERVICE	RANGE	OPERATION VALVE	CONTROLLER OUTPUT	RECORDER	INDICATOR	CONTROLLER	TRANSMITTER	CONTROL VALVE	ALARM	REMARKS
HIC-3-52-02	VENT BEFORE CIRCULATING SYSTEM	0~100%	—	100%	—	o	—	—	o	—	
" -03	INLET NH_3 CONVERTER	"	—	"	—	o	—	—	o	—	
" -04	FRESH GAS 1st STAGE	"	—	48%	—	o	—	—	o	—	
" -05	FRESH GAS 2nd STAGE	"	—	35%	—	o	—	—	o	—	
" -06	FRESH GAS 3rd STAGE	"	—	17%	—	o	—	—	o	—	
" -07	VENT IN CIRCULATING SYSTEM	"	—	0%	—	o	—	—	o	—	
" -08	BY PASS CONVERTER	"	—	0%	—	o	—	—	o	—	

TAG. NO.	SERVICE	RANGE	OPERATION VALVE	CONTROLLER OUTPUT	RECORDER	INDICATOR	CONTROLLER	TRANSMITTER	CONTROL VALVE	ALARM	REMARKS
DR-3-43-01	DENSITY NH_3 WASHER	0.3~0.5 kp/Nm^3	0.55 kp/Nm^3	—	o	—	—	o	—	—	
DR-3-52-01	DENSITY NH_3 CONV	0.3~0.7 kp/Nm^3	0.58 kp/Nm^3	—	o	—	—	o	—	—	
ARA-3-29-01	OUTLET CO-CONVERSION	0~10% CO	1% CO	—	Δ	—	—	Δ	—	o^H	
AR-3-29-02	DRAIN WATER	3~9 pH	×	—	×	—	—	×	—	—	INSTRUMENT WAS MISSED
AR-3-31-01	OUTLET CO_2 REMOVAL	0~3 % CO_2	×	—	×	—	—	×	—	—	"
ARA-3-43-01	SYN GAS	0~100 PPM CO_2	28 PPM	—	o	—	—	o	—	o^H	
ARA-3-43-02	"	0~50 PPM $CO + CO_2$	×	—	×	—	—	×	—	—	INSTRUMENT WAS MISSED
ARA-8-21-01	O_2	0~100 PPM O_2	30 PPM	—	o	—	—	o	—	o^H	

TAG. NO.	SERVICE	RANGE	OPERATION VALVE	ELEMENT	COMPENSATE WIRE	PROTECTION TUBE	RECORDER	INDICATOR	ALARM	REMARKS
TR-3-29-01 /1	GAS OUTLET SATURATOR	0~600°C	164°C	o	Δ	—	o	—	—	ELEMENT CHANGED
" /2	1 STAGE INLET CO-CONVERTER	"	351	o	Δ	—	o	—	—	"
" /3	1 STAGE OUTLET CO-CONVERTER	"	481	o	Δ	o	o	—	—	" PROTECTION TUBE INSPECTED / GOOD
" /4	II STAGE INLET CO-CONVERTER	"	350	o	Δ	—	o	—	—	"
" /5	II STAGE OUTLET CO-CONVERTER	"	381	o	Δ	—	o	—	—	"
" /6	GAS INLET WATER PREHEATER	"	350	o	Δ	—	o	—	—	"
" /7	GAS INLET DEMOISTURE	"	163	o	Δ	—	o	—	—	"
" /8	GAS OUTLET CO-CONVERSION	"	33	o	Δ	o	o	—	—	" PROTECTION TUBE INSPECTED / GOOD
" /9	HOT WATER TO SATURATOR	"	172	o	Δ	—	o	—	—	"
" /10	STEAM INLET AFTER SEPARATOR	"	345	o	Δ	—	o	—	—	"
" /11	OUTLET CO_2-REMOVAL	"	25	o	Δ	—	o	—	—	"
" /12	N_2 TO CONVERTER GAS	"	28	o	Δ	—	o	—	—	"
TI-3-29-02 /1	GAS INLET SATURATOR	0~600°C	41°C	o	Δ	—	—	o	—	ELEMENT CHANGED
" /2	GAS AFTER STEAM SUPPLY		172	o	Δ	—	—	o	—	"
" /3	WATER INLET WATER PREHEATER		163	o	Δ	—	—	o	—	"
" /4	HOT WATER TO FEED WATER PLANT		153	o	Δ	—	—	o	—	"
" /5	HOT WATER FROM FEED WATER PLANT		67	o	Δ	—	—	o	—	"

TAG. NO.	SERVICE	RANGE	VALVE OPERATION	ELEMENT	CONDENSATE WIRE	PROTECTION TUBE	RECORDER	INDICATOR	ALARM	REMARKS
TI-3-29-02 /6	CIRCULATING WATER TO DEMOISTURE	0~600°C	41°C	o	Δ	—	—	o	—	ELEMENT CHANGED
" /7	WARM WATER TO DEMOISTURE	"	74	o	Δ	—	—	o	—	"
" /8	WATER TO DEMOISTURE	"	136	o	Δ	—	—	o	—	"
TI-3-43-01 /1	AFTER COPPER SOLUTION SCRUBBER	0~600°C	10°C	o	Δ	o	—	o	—	ELEMENT CHANGED, AND PROTECTION TUBE INSPECTED / GOOD
/2	OUTLET NH_3 WATER SCRUBBER	"	20	o	Δ	o	—	o	—	"
/3	AFTER RETURN GAS	"	28	o	Δ	—	—	o	—	
/4	OUTLET SUCTION TANK	"	15	o	Δ	o	—	o	—	" PROTECTION TUBE INSPECTED / GOOD
/5	AFTER REGENERATOR	"	26	o	Δ	—	—	o	—	"
/6	BEFORE HEATING PART	"	72	o	Δ	—	—	o	—	"
/7	AFTER UPPER PART	"	68	o	Δ	o	—	o	—	" PROTECTION TUBE INSPECTED / GOOD
/8	OUTLET REGENERATOR	"	80	o	Δ	—	—	o	—	"
/9	OUTLET SURGE TANK	"	75	o	Δ	—	—	o	—	"
/10	OUTLET WATER COOLER	"	28	o	Δ	o	—	o	—	" PROTECTION TUBE INSPECTED / GOOD
/11	OUTLET COOLING UNIT	"	10	o	Δ	—	—	o	—	"
TIC-3-29-04	GAS OUTLET HEAT EXCHANGE I	0~400°C	240°C	o	Δ	o	—	o	—	ELEMENT CHANGED, AND PROTECTION TUBE INSPECTED / GOOD
TIC-3-43-02	INLET SURGE TANK	0~100°C	75°C	o	Δ	o	—	o	—	"

TAG. NO.	SERVICE	RANGE	OPERATION VALVE	ELEMENT	CONPENSATE WIRE	PROTECTION TUBE	RECORDER	INDICATOR	ALARM	REMARKS
TR-3-52-01 /1	INLET CONVERTER	0~600°C	23°C	o	Δ	—	o	—	—	
" 2	INLET 1st STAGE	"	400	o	Δ	—	o	—	—	
" 3	OUTLET 1st STAGE	"	465	o	Δ	—	o	—	—	
" 4	INLET 2nd STAGE	"	422	o	Δ	—	o	—	—	
" 5	OUTLET 2nd STAGE	"	472	o	Δ	—	o	—	—	
" 6	INLET 3rd STAGE	"	450	o	Δ	—	o	—	—	
" 7	OUTLET 3rd STAGE	"	479	o	Δ	—	o	—	—	
" 8	OUTLET CONVERTER	"	179	o	Δ	—	o	—	—	
" 9	OUTLET TAIL GAS	"	30	o	Δ	o	o	—	—	PROTECTION TUBE INSPECTION ED / GOOD
" 10	SPARE	"	—	—	—	—	o	—	—	
" 11	"	"	—	—	—	—	o	—	—	
" 12	"	"	—	—	—	—	o	—	—	

TAG. NO.	SERVICE	RANGE	OPERATION VALVE	ELEMENT	COMPENSATE WIRE	PROTECTION TUBE	RECORDER	INDICATOR	ALARM	REMARKS
TI-3-52-02 /1	INLET CONVERTER	0~600°C	26°C	o	Δ	—	—	o	—	
" 2	INLET 1ST STAGE	"	386	o	Δ	—	—	o	—	
" 3	OUTLET 1ST STAGE	"	433	o	Δ	—	—	o	—	
" 4	INLET 2nd STAGE	"	430	o	Δ	—	—	o	—	
" 5	OUTLET 2nd STAGE	"	462	o	Δ	—	—	o	—	
" 6	INLET 3rd STAGE	"	451	o	Δ	—	—	o	—	
" 7	OUTLET 3rd STAGE	"	463	o	Δ	—	—	o	—	
" 8	OUTLET CONVERTER	"	124	o	Δ	—	—	o	—	
" 9	OUTLET BOILER	"	136	o	Δ	—	—	o	—	
" 10	OUTLET NH_3 SEPT	"	23	o	Δ	—	—	o	—	

UREA PLANT

TAG. NO.	SERVICE	RANGE	OPERATION VALVE	CONTROLLER OUTPUT	RECORDER	INDICATOR	CONTROLLER	TRANSMITTER	CONTROL VALVE	ALARM	REMARKS
FRCA-3-57-02	NH_3 LIQUID	0~10 m^3/H	6.3 m^3/H	50 %	O	↑	O	O	O	×	TRANSMITTER "ΔP" CHECKED / GOOD RECORDER OVERHAULED / GOOD ALARM UNIT TO BE RENEWED
FR-3-57-03	CO_2-COMP IN LET	0~3500 Nm^3/H	1600 Nm^3/H	—	O	—	—	O	—	—	"U" TUBE and RECORDER OVERHAULED / GOOD POSITION CHANGE FOR TRANSMITTER OK TRANSMITTER "ΔP" CHECKED / GOOD
FrR-3-57-07	NH_3 STORAGE TANK	0~2 m^3/H	2 m^3/H	—	O	—	—	O	—	—	TRANSMITTER OVERHAULED / GOOD RECORDER OVERHAULED / GOOD
FrRC-3-57-08	NH_3 SCRUBBER	0~0.2 m^3/H	0.2 m^3/H	65 %	O	—	O	O	O	—	TRANSMITTER } OVERHAULED / GOOD RECORDER } CONTROL VALVE OVERHAULED / GOOD
FrRC-2-81-01	UREA FILTER OUT	0~7x0.07 m^3/H	2.66 m^3/H	40 %	O	—	O	O	O	—	RECORDER OVERHAULED / GOOD

TAG. NO.	SERVICE	RANGE	OPERATION VALVE	CONTROLLER OUTPUT	RECORDER	INDICATOR	CONTROLLER	TRANSMITTER	CONTROL VALVE	ALARM	REMARKS
PRC-2-81-04	EVAPORATOR	0~0.7 kp/cm^2	0.38 kp/cm^2	100%	o	–	o	o	Δ	–	CONTROL VALVE, RECORDER } OVERHAULED / GOOD
PRC-2-81-07	SEPARATOR 2nd	$9\sim9\times10^3$ mm H_2O	7.2 kg/cm^2	–	o	–	×	o	o	–	CONTROLLER NOT GOOD RECORDER OVERHAULED / GOOD
PRC-2-81-11		0~6 kg/cm^2			–	–	Δ	Δ	Δ	–	LOCAL CONTROL
PRCA-3-57-05	NH_3 STORAGE TANK	0~40 kp/cm^2	21 kp/cm^2	15 %	o	–	o	o	o	o_L	RECORDER OVERHAULED / GOOD L ALARM CONTACT OVERHAULED / GOOD
PRC-3-57-12	LIQ NH_3 to FIRST REACTOR	0~400 kp/cm^2	190 kp/cm^2	65 %	o	–	o	o	o	–	TRANSMITTER, RECORDER } OVERHAULED / GOOD
PRC-3-57-15	STEAM FIRST REACTOR	0~6 kp/cm^2	4 kp/cm^2	30 %	o	–	o	o	o	–	RECORDER OVERHAULED / GOOD
PRC-3-57-16	STEAM	0~6 kp/cm^2	3 kp/cm^2	o	o	–	o	o	o	–	TRANSMITTER, RECORDER } OVERHAULED / GOOD
PRC-3-57-17	CONDENSATE 1ST REACTOR	0~400 kp/cm^2	200 kp/cm^2	10 %	–	–	o	o	o	–	

TAG. NO.	SERVICE	RANGE	OPERATION VALVE	CONTROLLER OUTPUT	RECORDER	INDICATOR	CONTROLLER	TRANSMITTER	CONTROL VALVE	ALARM	REMARKS
PRC-3-57-25	CARBAMATE GAS	0~4 kp/cm^2	2.05 kp/cm^2	60 %	o	—	o	o	o	—	RECORDER OVERHAULED / GOOD
PICA-3-57-32	N_2 GAS TANK	0~40 kp/cm^2	25 kp/cm^2	o	—	o	o	o	o	o H L	H.L ALARM CHECKED / GOOD
PIA-3-57-38	INST AIR	0~10 kp/cm^2	38 kp/cm^2	—	—	o	—	o	—	o	
PIA-3-57-08	CO_2-GAS to CO_2-COMP.	0~63 kp/cm^2		—	—	o	—	o	—	o	
PIA-3-57-56	COOLING WATER	0~10 kp/cm^2	2 kp/cm^2	—	—	o	—	o	—	o	
PIA-3-57-58	OIL COMP	0~6 kp/cm^2	3 kp/cm^2	—	—	o	—	o	—	o	

TAG. NO.	SERVICE	RANGE	OPERATION VALVE	CONTROLLER OUTPUT	RECORDER	INDICATOR	CONTROLLER	TRANSMITTER	CONTROL VALVE	ALARM	REMARKS
LIA-3-57-01	NH_3 STORAGE TANK	0~100 mm	60 mm	0 %	—	o	o	o	o	o	CONTROL VALVE, INDICATOR } OVERHAULED / GOOD H.L ALARM CHECKED / GOOD
LICA-3-57-02	1st REACTOR	0~100 mm	30 mm	0 %	—	o	o	o	o	o H L	H.L ALARM CHECKED / GOOD
LIC-3-57-03	UREA SOLUTION 1st SEPor	0~100 mm	42 mm	10 %	—	o	o	o	o	—	CONTROL VALVE OVERHAULED / GOOD
LICA-3-57-04	UREA SOLUTION 2nd SEPor	0~100 mm	48 mm	0 %	—	o	o	o	o	—	CONTROL VALVE OVERHAULED / GOOD
LIC-3-57-05	WASHING COLUMN	0~100 mm	40 mm	20 %	—	o	o	o	o	—	
LICA-3-57-07	SEPARATION WATER TANK	0~100 mm	60 mm	10 %	—	o	o	o	o	o H L	CONTROL VALVE OVERHAULED / GOOD H.L ALARM CHECKED / GOOD
LICA-3-57-08	STEAM CONDENSATE TANK	0~100 mm	100 mm	75 %	—	o	×	o	o	o H L	TRANSMITTER, INDICATOR } CHECKED / GOOD H.L ALARM NEW WIRING
LICA-3-57-09	NH_3 CONDEN-SATE TANK	0~100 mm	53 mm	100 %	—	o	o	o	o	o H L	INDICATOR OVERHAULED / GOOD H.L ALARM CHECKED / GOOD

TAG. NO.	SERVICE	RANGE	OPERATION VALVE	CONTROLLER OUTPUT	RECORDER	INDICATOR	CONTROLLER	TRANSMITTER	CONTROL VALVE	ALARM	REMARKS
LIA-2-81-01	UREA STRAGE TANK	0~100 mm	45 mm	—	—	o	—	o	—	o H L	INDICATOR CHECKED / GOOD H.L ALARM CHECKED / GOOD
LI-2-81-02	UREA MALTING	0~100 mm	o	—	—	o	—	×	—	—	
LIA-2-81-04	UREA TOWER TOP	0~100 mm	o	—	—	o	—	o	—	o L	
LIA-3-52-	NH_3 SYNTHESIS	0~100 mm	o	—	—	o	—	o	—	o H L	

TAG. NO.	SERVICE	RANGE	OPERATION VALVE	CONTROLLER OUTPUT	RECORDER	INDICATOR	CONTROLLER	TRANSMITTER	CONTROL VALVE	ALARM	REMARKS
TRC-3-57-06	UREA SOLUTION 1st	0~200 °C	93°C	15%	o	—	o	o	o	—	RECORDER OVERHAULED / GOOD TRANSDUCER CHECKED / GOOD
TRC-3-57-	UREA SOLUTION 2nd	0~150 °C	72°C	100%	o	—	Δ	o	o	—	RECORDER OVERHAULED AND TRANSDUCER CHECKED / GOOD
TRC-3-57-10	WASHING COLUMN	0~150 °C	80°C	75%	o	—	o	o	o	—	CONTROL VALVE RECORDER TRANSDUCER } OVERHAULED / GOOD
TRC-2-81-05	SEPARATOR	50~150 °C	111°C	75%	o	—	o	o	o	—	CONTROL VALVE RECORDER TRANSDUCER } OVERHAULED / GOOD
TRC-2-81-07	STRAGE TANK	50~150 °C	130°C	75%	o	—	o	o	o	—	CONTROL VALVE RECORDER TRANSDUCER } OVERHAULED / GOOD
TIC-2-81-10	UREA MALT	0~150 °C	73°C	o	o	—	o	o	o	—	TRANSDUCER CHECKED / GOOD
TRC-3-57-02											CONTROL VALVE OVERHAULED / GOOD TRANSDUCER "
ARA-3-57-01	CO_2-C INLET	0~1%	0.8%	—	—	×	Δ	—	Δ	×	RECORDER NOT GOOD INDICATOR " ALARM " } TO BE RENEWED

TAG. NO.	SERVICE	RANGE	OPERATION VALVE	ELEMENT	COMPENSATE WIRE	PROTECTION TUBE	RECORDER	INDICATOR	ALARM	REMARKS
TR-3-44B-01/1	CO_2-GAS DRYING	0~200 °C	×	×	×	Δ	×	—	—	
2	"	"	×	×	×	Δ	×	—	—	
3	"	"	×	×	×	Δ	×	—	—	
4	"	"	×	×	×	Δ	×	—	—	
5	"	"	×	×	×	Δ	×	—	—	
6	"	"	×	×	×	Δ	×	—	—	
7	"	"	×	×	×	Δ	×	—	—	
8	"	"	×	×	×	Δ	×	—	—	
9	"	"	×	×	×	Δ	×	—	—	
10	"	"	×	×	×	Δ	×	—	—	
11	"	"	×	×	×	Δ	×	—	—	
12	"	"	×	×	×	Δ	×	—	—	

TAG. NO.	SERVICE	RANGE	OPERATION VALVE	ELEMENT	COMPENSATE WIRE	PROTECTION TUBE	RECORDER	INDICATOR	ALARM	REMARKS
TR-3-57-05 /1	1st REACTOR BOTTOM	0~250°C	72	Δ	Δ		×	—	—	
/2	"	"	113	Δ	Δ		×	—	—	
/3	1st REACTOR UPPER	"	—	Δ	Δ		×	—	—	
/4	2nd REACTOR INLET	"	172	Δ	Δ		×	—	—	
/5	" OUTLET	"	187	o	Δ	Δ	×	—	—	
/6	WASHING COLUMN IN	"	110	Δ	Δ		×	—	—	
/7	" BOTTOM	"	57	Δ	Δ		×	—	—	
/8	" UPPER	"	159	Δ	Δ		×	—	—	
/9	" OUTLET	"	50	Δ	Δ		×	—	—	
/10	UREA MALTING PUMP OUTLET	"		o	Δ		×	—	—	
/11	TR-3-57-05/5	"		Δ	Δ		×	—	—	
/12	TR-3-57-05/10	"		o	Δ		×	—	—	

TAG. NO.	SERVICE	RANGE	VALVE OPERATION	ELEMENT	WIRE CONDENSATE	TUBE PROTECTION	RECORDER	INDICATOR	ALARM	REMARKS
TIA-3-57-02 /1	AMMONIA TANK OUT	0~250°C	33°C	Δ	×	Δ	—	×	× L	
2	1st REACTOR INLET NH_3		28°C	Δ	×	Δ	—	×	× L	
3	1st REACTOR INLET CO_2		117°C	Δ	×	Δ	—	×	× L	
4	1st REACTOR BOTTOM		147°C	Δ	×	Δ	—	×	× L	
5	2nd "		159°C	Δ	×	Δ	—	×	× L	
6	2nd REACTOR MIDDLE		154°C	Δ	×	Δ	—	×	× L	
7	"		153°C	Δ	×	Δ	—	×	× L	
8	"		163°C	Δ	×	Δ	—	×	× L	
9	2nd REACTOR OUT		118°C	Δ	×	Δ	—	×	× L	
10	HEATOR INLET		62°C	Δ	×	Δ	—	×	× L	
11	WASHING COLMUN		74°C	Δ	×	Δ	—	×	× L	
12	WATER TANK		44°C	Δ	×	Δ	—	×	× L	
13	NH_3 SCRUBBER		49°C	Δ	×	Δ	—	×	× L	
14	NH_3 CONDENSATE TANK		38°C	Δ	×	Δ	—	×	× L	
.										
.										
.										
.										
40										

AMMONIA SULPHATE PLANT

TAG. NO.	SERVICE	RANGE	OPERATION VALVE	CONTROLLER OUTPUT	RECORDER	INDICATOR	CONTROLLER	TRANSMITTER	CONTROL VALVE	ALARM	REMARKS
FR-2-51-01	CARBAMATE GAS	0~6000 kg/H	×	—	×	—	—	×	—	—	INSTRUMENT MISSED
FI-2-51-02	INLET SATURATOR	0~3000 kg/H	×	—	—	—	—	×	—	—	INSTRUMENT MISSED
" -03	"	"	×	—	—	—	—	×	—	—	INSTRUMENT MISSED
KrL-2-51-04	NH_3 WATER	0.3~3 m^3/H	0 m^3/H	—	—	—	—	o	—	—	
" -05	"	"	×	—	—	—	—	×	—	—	INSTRUMENT MISSED
FR-2-51-06	SATURATOR STEAM	0~2000 kg/H	760 kg/H	—	o	—	—	o	—	—	
FI-2-51-07	"	0~1000 kg/H	450 kg/H	—	—	—	—	o	—	—	
" -08	"	"	0 kg/H	—	—	—	—	o	—	—	
FrL-2-51-09	HOT WATER	0.3~3 m^3/H	0.5 m^3/H	—	—	—	—	o	—	—	

TAG. NO.	SERVICE	RANGE	OPERATION VALVE	CONTROLLER OUTPUT	RECORDER	INDICATOR	CONTROLLER	TRANSMITTER	CONTROL VALVE	ALARM	REMARKS
FrL-2-51-10	HOT WATER	0.3~3 m^3/H	0 m^3/H	—	—	—	—	o	—	—	
FrR-2-51-11	H_2SO_4 98%	0.5~5 m^3/H	2 m^3/H	—	o	—	—	o	—	—	
FrL-2-51-12	"	0.25~2.5 m^3/H	×	—	—	—	—	×	—	—	INSTRUMENT MISSED
" -13	"	"	×	—	—	—	—	×	—	—	INSTRUMENT MISSED
FR-2-51-14	NH_3 WATER	0~6000 kg/H	0 kg/H	—	o	—	—	o	—	—	
FR-2-51-15	NH_3 GAS	0~3500 kg/H	×	—	×	—	—	o	—	—	RECORDER MISSED
FR-2-51-16	PROCESS WATER	0~10 m^3/H	7.1 m^3/H	—	o	—	—	o	—	—	

TAG. NO.	SERVICE	RANGE	OPERATION VALVE	CONTROLLER OUTPUT	RECORDER	INDICATOR	CONTROLLER	TRANSMITTER	CONTROL VALVE	ALARM	REMARKS
PIA-2-51-01	NH_3 GAS	0~16 kp/cm^2	×	—	—	×	—	Δ	—	×	INSTRUMENT MISSED
PRC-2-51-02	"	0~6 kp/cm^2	×	×	×	—	×	Δ	×	—	INSTRUMENT, CONTROLLER NOT GOOD
PRA-2-51-04	CARBAMATE GAS	"	0 kp/cm^2	—	Δ	Δ	—	Δ	—	×	
PRA-2-51-06	SATURATOR STEAM	0~16 kp/cm^2	5 kp/cm^2	—	o	Δ	—	Δ	—	×	
PRCA-2-51-09	COOLING WATER	"	3.5 kp/cm^2	100%	Δ	Δ	×	Δ	o	×	CONTROL VALVE OVERHAULED / GOOD CONTROLLER OVERHAULED / GOOD
PIA-2-51-10	INST AIR	0~10 kp/cm^2	3.5	—	—	o	—	—	—	×	

TAG. NO.	SERVICE	RANGE	OPERATION VALVE	CONTROLLER OUTPUT	RECORDER	INDICATOR	CONTROLLER	TRANSMITTER	CONTROL VALVE	ALARM	REMARKS
LIA-2-51-0	H_2SO_4 HEAD TANK	0~1800 mm	×	—	—	—	—	×	—	×	INSTRUMENT MISSED
LICA-2-51-02	NH_3 EVAPORATOR	0~750 mm	490 mm	250 mm	—	Δ	o	o	o	×	CONTROL VALVE OVERHAULED / CONTROL VALVE TO BE RENEWED
LIA-2-51-03	"	0~500 mm	×	—	—	—	—	×	—	×	INSTRUMENT MISSED
LIA-2-51-08	LYE-TANK	0~2900 mm	×	—	—	—	—	×	—	×	INSTRUMENT MISSED
LI-2-51-10	SULPHURIC ACID TANK	0~1200 mm	×	—	—	Δ	—	×	—	×	TRANSMITTER NOT GOOD
TIC-2-51-09	NH_3 SUPER HEATER	-10~0~~+50 °C	25 °C	90 %	—	Δ	×	—	Δ	—	PROTECTION TUBE TO BE CHANGED CONTROL VALVE OVERHAULED / GOOD

TAG. NO.	SERVICE	RANGE	OPERATION VALVE	ELEMENT	COMPENSATE WIRE	PROTECTION TUBE	RECORDER	INDICATOR	ALARM	REMARKS
TR-2-51-01 /1	CARBAMATE GAS	0~200°C	52°C	Δ	Δ	—	o	—	—	
" 2	STEAM	"	153.5	Δ	Δ	—	o	—	—	
" 3	NH_3 GAS	"	63	Δ	Δ	—	o	—	—	
" 4	H_2SO_4 98%	"	34	Δ	Δ	Δ	o	—	—	PROTECTION TUBE TO BE RENEWED
" 5	SPARE	"	—	—	—	—	—	—	—	
" 6	"	"	—	—	—	—	—	—	—	
" 7	"	"	—	—	—	—	—	—	—	
" 8	"	"	—	—	—	—	—	—	—	
" 9	"	"	—	—	—	—	—	—	—	
" 10	"	"	—	—	—	—	—	—	—	
" 11	"	"	—	—	—	—	—	—	—	
" 12	"	"	—	—	—	—	—	—	—	
TI-2-51-06 /1	OUTLET LYE TANK	0~150°C	×	×	×	×	—	×	—	INSTRUMENT MISSED
" 2	AT DRYER HEATING ZONE	"	×	×	×	×	—	×	—	
" 3	AT DRYER COOLING ZONE	"	×	×	×	×	—	×	—	
" 4	AT TANK FOR SPRAYING AGENT	"	×	×	×	×	—	×	—	

H_2SO_4 PLANT

TAG. NO.	SERVICE	RANGE	OPERATION VALVE	CONTROLLER OUTPUT	RECORDER	INDICATOR	CONTROLLER	TRANSMITTER	CONTROL VALVE	ALARM	REMARKS
FR-861-1	DRYING TOWER OUT	0~26000 Nm^3/h	×	—	×	—	—	×	—	—	
FI-868-1	INLET FURNACE	0~18000 Nm^3/H	×	—	—	Δ	—	×	—	—	
TR-868-3-3	30K STEAM	250~500 °C	×	—	×	—	—	Δ	—	—	RECORDER TO BE CHANGED
FR-868-3-2	"	0~10 T/H	×	—	×	—	—	Δ	—	—	
PR-868-3-6	"	0~40 kg/cm^2	×	—	×	—	—	×	—	—	
LRC-861-1	STEAM DRUM	0~400 mm	72 mm	65 %	o	—	o	Δ	o	—	CONTROLLER OVERHAULED CONTROL VALVE CHANGED TRANSMITTER TO BE RENEWED ITER
DR-861-2	H_2SO_4	94~98.5 %	97 %	—	Δ	—	—	Δ	—	—	
DR-861-3	H_2SO_4	96.5~ 98.5%	99.2 %	—	Δ	—	—	Δ	—	—	

TAG. NO.	SERVICE	RANGE	VALVE OPERATION	ELEMENT	COMPENSATE WIRE	PROTECTION TUBE	RECORDER	INDICATOR	ALARM	REMARKS
TI-861-1/1	BEFORE CONVERTER	0~900°C	280°C	o	Δ	o	—	o	—	PROTECTION TUBE INSPECTIONED / GOOD
2	BEFORE I RAY		402	o	Δ	o	—	o	—	PROTECTION TUBE INSPECTIONED / GOOD
3	I RAY		400	o	Δ	—	—	o	—	
4	OUTLET I RAY		570	o	Δ	—	—	o	—	
5	INLET II RAY		492	o	o	o	—	o	—	COMPENSATE WIRE CHANGED PROTECTION TUBE CHANGED
6	OUTLET II RAY		550	o	Δ	—	—	o	—	
7	INLET III RAY		410	o	Δ	o	—	o	—	PROTECTION TUBE INSPECTIONED / GOOD
8	OUTLET III RAY		410	o	Δ	—	—	o	—	
9	INLET IV RAY		392	o	Δ	—	—	o	—	
10	IV RAY		420	o	Δ	o	—	o	—	PROTECTION TUBE INSPECTIONED / GOOD
11	IV RAY		505	o	Δ	o	—	o	—	PROTECTION TUBE INSPECTIONED / GOOD
12	OUTLET III RAY		460	o	Δ	—	—	o	—	
13	AIR PREHEATER		160	o	Δ	—	—	o	—	
14	INTERMEDIATE COOLER		50	o	Δ	—	—	o	—	
15	"		270	o	Δ	—	—	o	—	
16	AIR PREHEATER		375	o	Δ	—	—	o	—	
17	ECO INLET		370	o	Δ	—	—	o	—	
18	ECO OUTLET		170	o	Δ	—	—	o	—	
19	STEAM		330	o	Δ	—	—	o	—	

TAG. NO.	SERVICE	RANGE	VALVE OPERATION	ELEMENT	WIRE CONPENSATE	TUBE PROTECTION	RECORDER	INDICATOR	ALARM	REMARKS
TR-861-2.1	BEFORE CONVERTER	0~700°C	385°C	o	Δ	—	Δ	—	—	RECORDER OVERHAULED / TO BE RENEWED
" -2.2	BEFORE I RAY	"	400	o	Δ	—	Δ	—	—	
" -2.3	INLET II RAY	"	415	o	Δ	—	Δ	—	—	
" -2.4	OUTLET II RAY	"	495	o	Δ	—	Δ	—	—	
" -2.5	INLET III RAY	"	455	o	Δ	—	Δ	—	—	
" -2.6	IV RAY	"	445	o	Δ	—	Δ	—	—	
TR-868-2.1	OUTLET ECONOMIZER	0~600°C	209°C	o	Δ	—	Δ	—	—	RECORDER OVERHAULED / TO BE RENEWED
" -2.2	OUTLET FURNACE	50~1600°C	900	o	Δ	—	Δ	—	—	

EGAT BOILER

TAG. NO.	SERVICE	RANGE	OPERATION VALVE	CONTROLLER OUTPUT	RECORDER	INDICATOR	CONTROLLER	TRANSMITTER	CONTROL VALVE	ALARM	REMARKS
FI-	COMB AIR	0~100 %	25 %	—	—	o	—	o	—	—	
FI-	COAL RATE	0~100 %	18 %	—	—	o	—	o	—	—	
FI-	HP STEAM FLOW	0~40 T/H	×	—	—	×	—	×	—	—	
FI-	F.W FLOW	0~50 T/H	8 T/H	—	—	o	—	o	—	—	
FI-	STEAM TO FERTZER PLANT	0~15 T/H	12 T/H	—	—	o	—	o	—	—	
LTA-	STEAM DRUM	-18~0 ~+22 mm	±0 mm	—	—	o	×	o	o	o H.L	

TAG. NO.	SERVICE	RANGE	OPERATION VALVE	CONTROLLER OUTPUT	RECORDER	INDICATOR	CONTROLLER	TRANSMITTER	CONTROL VALVE	ALARM	REMARKS
PI-	FD AIR PREHEATER IN	0~250 mmWG	30 mmWG	—	—	o	—	o	—	—	
PI-	FD AIR PREHEATER OUT	"	20 mmWG	—	—	o	—	o	—	—	
PI-	FLUE GAS ECO IN	0~200 mmWG	25 mmWG	—	—	o	—	o	—	—	
PI-	FLUE GAS ECO OUT	"	12 mmWG	—	—	o	—	o	—	—	
PI-	FLUE GAS PREHEATER OUT	"	0 mmWG	—	—	o	—	Δ	—	—	
PI-	STORAGE TANK I	0~40 CM.WG	13 CM.WG	—	—	o	—	o	—	—	
PI-	STORAGE TANK II	"	"	—	—	o	—	o	—	—	
PI-	SEC AIR	0~1000 mmWG	0 mmWG	—	—	Δ	—	Δ	—	—	
PI-	FD AIR	0~250 mmWG	20 mmWG	—	—	o	—	o	—	—	

TAG. NO.	SERVICE	RANGE	OPERATION VALVE	CONTROLLER OUTPUT	RECORDER	INDICATOR	CONTROLLER	TRANSMITTER	CONTROL VALVE	ALARM	REMARKS
PI-	HP STEAM	0~100 kg/cm^2	40 kg/cm^2	—	—	o	—	o	—	—	
PI-	FURNACE DRAFT	-10~0 ~+5 mmWG	-3 mmWG	—	—	o	—	o	—	—	
PGA	STEAM	0~100 kg/cm^2	40 kg/cm^2	—	—	o	—	o	—	—	
PG	FEED WATER	"	63 kg/cm^2	—	—	o	—	o	—	—	

TAG. NO.	SERVICE	RANGE	OPERATION VALVE	ELEMENT	CONPENSATE WIRE	PROTECTION TUBE	RECORDER	INDICATOR	ALARM	REMARKS
TI-	ED ECO IN	0~300°C	90°C	O	O	—	—	O	—	
TI-	FD AIR PREHEATER OUT	"	104	O	O	O	—	O	—	PROTECTION TUBE INSPECTIONED / GOOD
TI-	FW FCO OUT	"	240	O	O	—	—	O	—	
TI-	DESUPER HEATER IN	200~550°C	330°C	O	O	—	—	O	—	
TI-	DESUPER HEATER OUT	"	460°C	O	O	—	—	O	—	
TI-	FLUE GAS ECO IN	0~700°C	230°C	O	O	—	—	O	—	
TI-	FLUE GAS ECO OUT	"	280	O	O	—	—	O	—	
TI-	FLUE GAS PREHEATER OUT	"	520	O	O	O	—	O	—	PROTECTION TUBE INSPECTIONED / GOOD
TI	SUPER HEATER OUTLET	200~500°C	435°C	O	O	—	—	O	—	

TAG. NO.	SERVICE	RANGE	OPERATION VALVE	CONTROLLER OUTPUT	RECORDER	INDICATOR	CONTROLLER	TRANSMITTER	CONTROL VALVE	ALARM	REMARKS
CO_2	INSIDE FURNACE	0 ~ 20 %	×	—	—	×	—	×	—	—	
$CO + H_2$	"	0 ~ 20 %	×	—	—	×	—	×	—	—	

FCV-3-29-02 (AMMONIA PLANT STEAM)		
SPECIFICATION	VALVE TYPE	Single seat
	RATING	40 K
	SIZE	80 A
	TYPE OF PLUG	COMPLETE CONE/PARABOLIC
	CHARACTERISTIC	Equal %
	CV	65
	VALVE ACTION	Spring close
	FLOW	max. 6.8 t/H, standard 5.94 t/H
	TEMP/ΔP	350°C/3.5 kg/cm^{2}G
INSPEC RESULT	TIGHT TEST	Water 60 kg/cm^2, 15 min Good
	LEKAGE TEST	Air 1 kg/cm^2, 9.6 ℓ/min Good
	VALVE TRAVEL	Full stroke Good
	PAINTING OF BODY	OK
	GLAND PACKING	Changed, OK
	SEAT PACKING	"
REMARKS	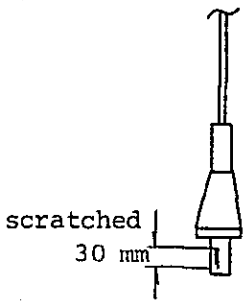 became slender about 0.5 mm	
	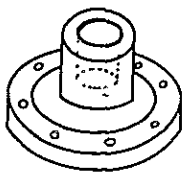 The lower cover of guide bush had been damaged and it was newly prepared and changed. 34 ø 25 ø 20 mm	
	* Valve plug & Seat ring should be replaced.	

FRC-3-29-02 (AMMONIA PLANT)

SPECIFICATION	VALVE TYPE	Single seat
	RATING	350°C/29 K
	SIZE	80
	TYPE OF PLUG	Complete cone/parabolic
	CHARACTERISTIC	Equal %
	CV	65
	VALVE ACTION	Spring close
INSPEC RESULT	TIGHT TEST	
	LEKAGE TEST	
	VALVE TRAVEL	
	PAINTING OF BODY	
	GLAND PACKING	
	SEAT PACKING	
REMARKS		

PCV-3-31-2 (AMMONIA PLANT FLASH VESSEL)		
SPECIFICATION	VALVE TYPE	Single seat
	RATING	40 K
	SIZE	
	TYPE OF PLUG	PARABOLIC
	CHARACTERISTIC	Eq %
	CV	MAX CV:20 NOR.OPERATION CV: 11.6
	VALVE ACTION	AIR to OPEN
INSPEC RESULT	TIGHT TEST	WATER 60 K, 15 min. Good
	LEKAGE TEST	Air 2K, 0.35 ℓ/min. Good
	VALVE TRAVEL	Full stroke Good
	PAINTING OF BODY	OK
	GLAND PACKING	Changed OK
	SEAT PACKING	"
REMARKS	 scratch 20 mm length " 30 mm " 15 mm	

LCV-3-52-01 (AMMONIA SEPARATOR)

SPECIFICATION	VALVE TYPE	Angle
	RATING	500 K
	SIZE	24
	TYPE OF PLUG	PARABOLIC
	CHARACTERISTIC	LINEAR
	CV	1.33
	VALVE ACTION	AIR to OPEN
	BODY MATERIAL	WN 4580/VA
INSPEC. RESULT	TIGHT TEST	WATER 600 kg/cm^2, 15 min. Good
	LEKAGE TEST	AIR 4 kg/cm^2, 0.8 ℓ/min. Good
	VALVE TRAVEL	Full stroke Good
	PAINTING OF BODY	OK
	GLAND PACKING	Change OK
	SEAT PACKING	"
REMARKS	VALVE PLUG & SEAT RING changed	

LCV-3-29-02 (AMMONIA DEMOISTURE WATER)		
SPECIFICATION	VALVE TYPE	Double seat
	RATING	40 K
	SIZE	
	TYPE OF PLUG	PARABOLIC
	CHARACTERISTIC	LINEAR
	CV	max Cv 310, NOR OPERATION Cv 230.6
	VALVE ACTION	AIR to OPEN
	SERVO MOTOR	A300
INSPEC RESULT	TIGHT TEST	Water 60 kg/cm^2, 15 Good
	LEKAGE TEST	Water 4 kg/cm^2, 0 ℓ/min Good
	VALVE TRAVEL	Full stroke OK
	PAINTING OF BODY	OK
	GLAND PACKING	Changed OK
	SEAT PACKING	"
REMARKS		

PCV-3-65-03 (FEED WATER MEDIUM STEAM)

SPECIFICATION	VALVE TYPE	Double seat
	RATING	16
	SIZE	80
	TYPE OF PLUG	PARABOLIC
	CHARACTERISTIC	Eq %
	CV	KV 76
	VALVE ACTION	AIR to OPEN
INSPEC RESULT	TIGHT TEST	Water 24 kg/cm^2, 15 min Good
	LEKAGE TEST	Water 4 kg/cm^2, 5.4 ℓ/min. Good
	VALVE TRAVEL	Full stroke OK
	PAINTING OF BODY	OK
	GLAND PACKING	Changed OK
	SEAT PACKING	"

REMARKS

VALVE STEAM & PLUG are recommendable to be changed within 2 years.

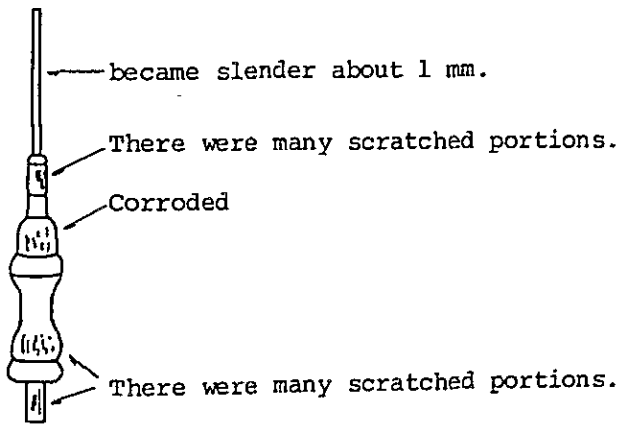

PCV-3-65-02 (FEED WATER MEDIUM STEAM)

SPECIFICATION	VALVE TYPE	Single seat
	RATING	40
	SIZE	50
	TYPE OF PLUG	PARABOLIC
	CHARACTERISTIC	Eq %
	CV	KV: 40
	VALVE ACTION	AIR to OPEN
	MAX FLOW	11 t/H
INSPEC RESULT	TIGHT TEST	Water 60 kg/cm^2, 15 min Good
	LEKAGE TEST	AIR 2 kg/cm^2, 4.2 ℓ/min Good
	VALVE TRAVEL	Full stroke good
	PAINTING OF BODY	OK
	GLAND PACKING	Changed OK
	SEAT PACKING	"

REMARKS

Valve stem to be changed next occasion.

Valve plug and seat ring were finished by the machining.

Body inside has a hole by corrosion and seat ring damaged by the leakage. The troubles have been repaired by welding, yet it is recommendable to replace within 2 years.

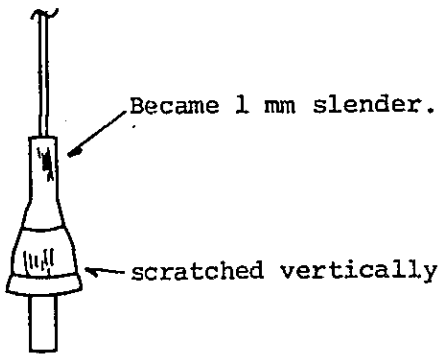

TCV-3-65-01 (FEED WATER INJECTION WATER)

SPECIFICATION	VALVE TYPE	
	RATING	40 K
	SIZE	
	TYPE OF PLUG	
	CHARACTERISTIC	
	CV	
	VALVE ACTION	
INSPEC RESULT	TIGHT TEST	Water 60 kg/cm^2, 15 min. Good
	LEKAGE TEST	-
	VALVE TRAVEL	Full stroke OK
	PAINTING OF BODY	OK
	GLAND PACKING	Changed OK
	SEAT PACKING	"
REMARKS		

valve plug

Valve plug and Seat ring good

Valve plug double seat face OK

TCV-3-65-02 (FEED WATER INJECTION WATER)		
SPECIFICATION	VALVE TYPE	
	RATING	20 K
	SIZE	
	TYPE OF PLUG	
	CHARACTERISTIC	
	CV	
	VALVE ACTION	
INSPEC RESULT	TIGHT TEST	Water 30 kg/cm^2, 15 min. Good
	LEKAGE TEST	-
	VALVE TRAVEL	Full stroke OK
	PAINTING OF BODY	OK
	GLAND PACKING	Change OK
	SEAT PACKING	"
REMARKS	 valve plug	

LCV-5 (GASIFICATION STEAM DRUM)

SPECIFICATION	VALVE TYPE	Single seat
	RATING	
	SIZE	32 (1 1/2")
	TYPE OF PLUG	
	CHARACTERISTIC	Eq %
	CV	
	VALVE ACTION	
	FLOW	Q max 42 m^3/H, Q normal 8 m^3/H
	P_1, P_2	33.5 K, 12 K min.
INSPEC RESULT	TIGHT TEST	Water 60 kg/cm^2, 15 min. Good
	LEKAGE TEST	AIR 2 kg/cm^2, 1 ℓ/min. Good
	VALVE TRAVEL	Full stroke OK
	PAINTING OF BODY	OK
	GLAND PACKING	Changed OK
	SEAT PACKING	"

REMARKS

Connections of Valve plug and Stem were loosened and had been repaired.

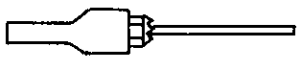

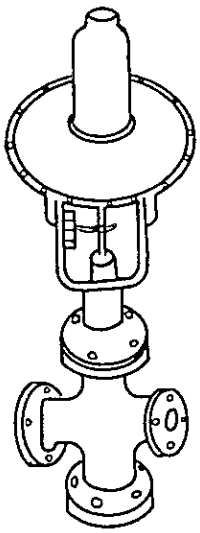

This was changed to UREA PLANT TCV-3-57-07.

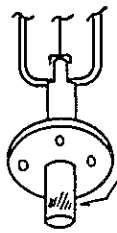

Here was corroded, the damaged one was used in Urea plant and it is better to be renewed.

The CV value of LCV is too large.
It should be reduce to size of 1/3.

FCV-4-11-03 (ADIP OUTLET CONDENSATE REBOILER)		
SPECIFICATION	VALVE TYPE	Single seat
	RATING	10
	SIZE	25
	TYPE OF PLUG	PARABOLIC
	CHARACTERISTIC	Eq %
	CV	13
	VALVE ACTION	AIR to OPEN
INSPEC RESULT	TIGHT TEST	Water 15 kg/cm^2, 15 min. Good
	LEKAGE TEST	AIR 4 kg/cm^2, 0 ℓ/min. Good
	VALVE TRAVEL	Full stroke OK
	PAINTING OF BODY	OK
	GLAND PACKING	Changed OK
	SEAT PACKING	"
REMARKS	VALVE PLUG and Seat ring were finished.	

LCV-4 (AIR SEPARATION)		
SPECIFICATION	VALVE TYPE RATING SIZE TYPE OF PLUG CHARACTERISTIC CV VALVE ACTION	
INSPEC RESULT	TIGHT TEST	Water 15 kg/cm^2, 15 min. Good
	LEKAGE TEST	
	VALVE TRAVEL	Full stroke Good
	PAINTING OF BODY	OK
	GLAND PACKING	Change OK
	SEAT PACKING	"
REMARKS	Good condition	

LCV-7 (AIR SEPARATION)		
SPECIFICATION	VALVE TYPE RATING SIZE TYPE OF PLUG CHARACTERISTIC CV VALVE ACTION	
INSPEC RESULT	TIGHT TEST	Water 10 kg/cm^2, 15 min Good
	LEKAGE TEST	
	VALVE TRAVEL	Full stroke OK
	PAINTING OF BODY	OK
	GLAND PACKING	Change OK
	SEAT PACKING	"
REMARKS	Good condition	

LCV-861-1 (H_2SO_4 PLANT STEAM DRUM)

SPECIFICATION	VALVE TYPE	
	RATING	
	SIZE	2B
	TYPE OF PLUG	
	CHARACTERISTIC	
	CV	KV: 20
	VALVE ACTION	
INSPEC RESULT	TIGHT TEST	Water 60 kg/cm^2, 15 min. Good
	LEKAGE TEST	AIR 2 kg/cm^2, 0.6 ℓ/min. Good
	VALVE TRAVEL	Full stroke Good
	PAINTING OF BODY	OK
	GLAND PACKING	Change OK
	SEAT PACKING	"

REMARKS

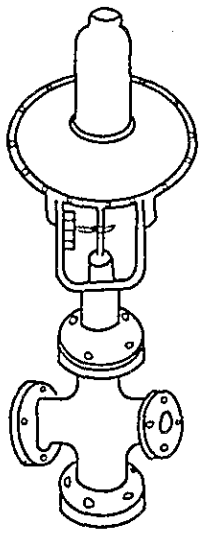

The spare actuator of Ammonia FIC-3-65-03 was converted to this, because of the old actuator had not enough power to close the valve when the water pressure was over 40^K.

The body was change to new spare part, which was made in Bangkok.

KV value of 20 is too large for this valve.

Valve plug was machine and lapped to the seat.

GASIFICATION, FEED WATER, ADIP PLANT CONTROL VALVE O.H SCHEDULE

DATE			

NO	ITEM \ DATE	JUL 11	12	13	14	15	16	17	18	19	20	21	22	23	24	25	26	27	28	RATING	TIGHT TEST	LEAKAGE TEST	TEST DATA (%) 0	25	50	75	100
1	LCV-5 (Gesification drum)																			ND25/40 1/12"	60 kg/cm^2G	AIR 2K 1 l/min.	0	25	50	75	100
2	PCV-3-65-02 (Feed water)																			ND25/40 2" SINGLE SEAT	60 "	AIR 2K 4.2 l/min.	0	25	50	75	100
3	PCV-3-65-03 (Feed water)																			ND25/40 DOUBLE SEAT	24 "	WATER 4K 5.4 l/min.	0	25	50	75	100
4	TCV-3-65-01 (Feed water)																			ND40	60 "	AIR 2K 3 l/min.	0	25	50	75	100
5	TCV-3-65-02 (Feed water)																				30 "	WATER 4K 8.2 l/min.	0	25	50	75	100
6	FCV-4-11-03 (Adip)																			1.21654.4/3 25/53693 GS4571 E25 P13G	15 "	AIR 4K 0 l/min.	0	25	50	75	100

AMMONIA PLANT VALVE OVERHAUL SCHEDULE

DATE			

NO	ITEM \ DATE	JUL 11	12	13	14	15	16	17	18	19	20	21	22	23	24	25	26	27	28	RATING kg/cm^{2}G	TIGHT TEST kg/cm^{2}G	LEAKAGE TEST l/min.	VALVE LIFT TEST DATA 0%	25%	50%	75%	100%
8	FCV-3-29-04 (HOT WATER)								▨											40	60	Water 4K 0	0	25	50	75	100
9	PCV-3-31-12 (FLASH VESSEL)				▨	▨														40	60	Air 2K 0.35	0	25	50	75	100
10	LCV-3-29-02 (DEMOISTURE)												▨	▨						40	60	Water 4K 0	0	25	50	75	100
11	LCV-3-52-01 (NH_3 SEPARATOR)												▨	▨						500	750	Air 4K 0.8	0	25	50	75	100
12	FIC-3-29-02			▨	▨															40	60	Air 1K 9.6	0	25	50	75	100

H_2SO_4

AMMONIUM SULPHATE PLANT VALVE OVERHAUL SCHEDULE

DATE			

NO	DATE / ITEM	JUL 11	12	13	14	15	16	17	18	19	20	21	22	23	24	25	26	27	28	RATING kg/cm²G	TIGHT TEST kg/cm²G	LEAKAGE TEST l/min	VALVE LIFT TEST DATA 0%	25%	50%	75%	100%
	[H_2SO_4 PLANT]																					Air 2K					
13	LCV-861-1			▨	▨	▨	▨	▨	▨											40	60	0.6	0	25	50	75	100
	(STEAM DRUM)																										
	[A S PLANT]																					Water 4K					
14	PCV-2-51-09	▨																		10	15	8	0	25	50	75	100
	(COOLING WATER)																										
																						Air 4K					
15	LCV-2-51-02															▨	▨			40	60	0.5	0	25	50	75	100
	(EVAPORATOR)																										
																						Air 2K					
16	TCV-2-51-09		▨	▨											▨					16	24	0.18	0	25	50	75	100
	(NH_3 SUPER HEATER)																										

GASIFICATION PLANT THERMO RECORDER OVERHAUL SCHEDULE

DATE			

NO	ITEM \ DATE	JUL 11	12	13	14	15	16	17	18	19	20	21	22	23	24	25	26	27	28	RANGE	ELEMENT	TEST DATA	REMARKS
1	TRA-1	▨																		50∿700°C	NiCr-Ni	50 200 400 500 600	
																						(50) (150) (400) (510) (630)	
2	TR-2		▨																	0∿200°C	Pt100Ω	0 50 100 150 200°C	
																						(1) (60) (120) (173) (↗)	
3	TRA-3									Not recording													
4	TR-20					▨	▨													0∿150°C	Pt100Ω	0 50 100 150°C	Pointing of recorder was not clear.
																						(0) (47) (101) (153)	
5	TR-23		▨																	50∿1600°C	PR	50 400 800 1200 1600°C	
																						(50) (420) (900) (1340) (↗)	
6	TR-24	▨	▨							3 Point use										0∿100°C	Pt100Ω	0 20 50 70 90°C	GAIN NO GOOD
										TR-20												(2) (21) (51) (71) (91)	
7	TI-23-1		▨																	0∿1600°C	PR	0 400 800 1200 1600°C	
																						(0) (400) (790) (1170) (1540)	
8	TI-7		▨																	50∿1200°C	NiCr-Ni	50 300 600 900 1200	GOOD
																						(50) (300) (600) (900) (1200)	