5-5 Project Cost

The Project's major materials and equipment, and construction work will be financed by grant aid from the Government of Japan.

The estimated cost to be borne by the Government of Kenya is Ksh 1 million.

Cost estimates were made based on October 1987's exchange rates shown as follows:

1 US $ = 145.68 yen
1 US $ = Ksh 16.21
1 Ksh = 9.02 yen

Works to be borne by the Government of Kenya are as follows:

Electrical Work:

Power receiving and transformer installation work:	Ksh 0.3 million
Cable installation (3,300 V):	Ksh 0.3 million
Other work:	Ksh 0.4 million
TOTAL	Approx. Ksh 1.0 million

GENERAL PLAN

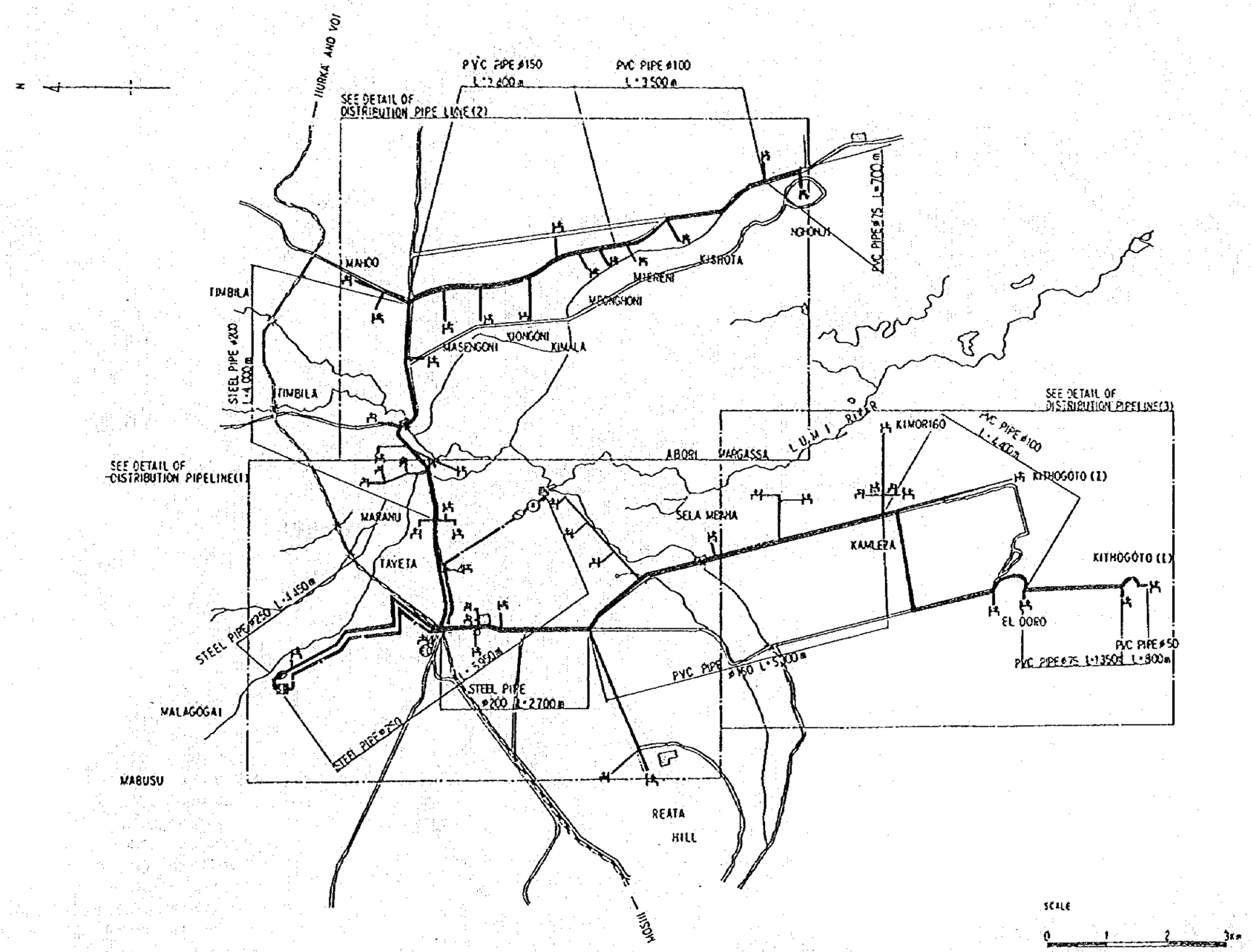

DISCRIPTION	SYMBOL
TRANSMISSION PIPE LINE	
DISTRIBUTION PIPE LINE	
AQUEDUCT BRIDGE	
WATER METER	
PUMP	
SERVICE RESERVOIR	S.R
KIOSK (4TAPS)	4
KIOSK (2TAPS)	
WATER INTAKE FACILITY	I.N
EXISTING ELEVATED TANK	ET

REPUBLIC OF KENYA
MINISTRY OF WATER DEVELOPMENT

TAVETA-LUMI WATER SUPPLY PROJECT

GENERAL PLAN

DATE OCT '87 | SCALE | DWG-No-18

JAPAN INTERNATIONAL COOPERATION AGENCY (JICA)

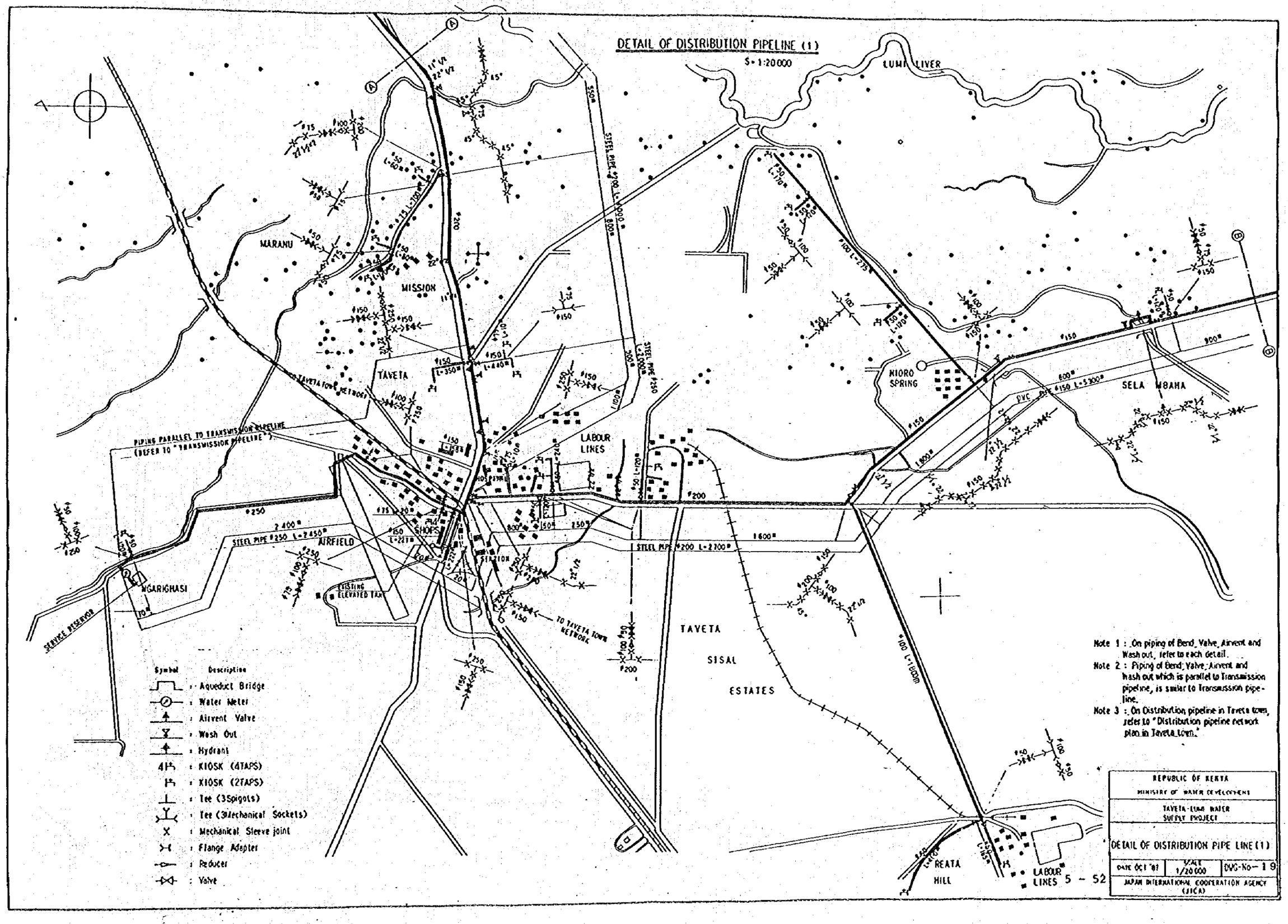
DETAIL OF DISTRIBUTION PIPELINE (1)
S=1:20000
LUMI LIVER
MARANU
MISSION
TAVETA
LABOUR LINES
NIORO SPRING
SELA MBAHA
AIRFIELD
SHOPS
STATION
NGARIGHASI
SERVICE RESERVOIR
EXISTING ELEVATED TANK
TO TAVETA TOWN NETWORK
PIPING PARALLEL TO TRANSMISSION PIPELINE (REFER TO "TRANSMISSION PIPELINE")
STEEL PIPE #250 L=2450m
STEEL PIPE #200 L=2700m
STEEL PIPE #200 L=1000m
STEEL PIPE #250 L=2000m
TAVETA SISAL ESTATES
REATA HILL
LABOUR LINES
Symbol Description
: Aqueduct Bridge
: Water Meter
: Airvent Valve
: Wash Out
: Hydrant
: KIOSK (4TAPS)
: KIOSK (2TAPS)
: Tee (3Spigots)
: Tee (3Mechanical Sockets)
: Mechanical Sleeve joint
: Flange Adapter
: Reducer
: Valve
Note 1 : On piping of Bend, Valve, Airvent and Wash out, refer to each detail.
Note 2 : Piping of Bend, Valve, Airvent and wash out which is parallel to Transmission pipeline, is similar to Transmission pipeline.
Note 3 : On Distribution pipeline in Taveta town, refer to "Distribution pipeline network plan in Taveta town."
REPUBLIC OF KENYA
MINISTRY OF WATER DEVELOPMENT
TAVETA-LUMI WATER SUPPLY PROJECT
DETAIL OF DISTRIBUTION PIPE LINE (1)
DATE OCT '87
SCALE 1/20000
DWG-No-19
JAPAN INTERNATIONAL COOPERATION AGENCY (JICA)

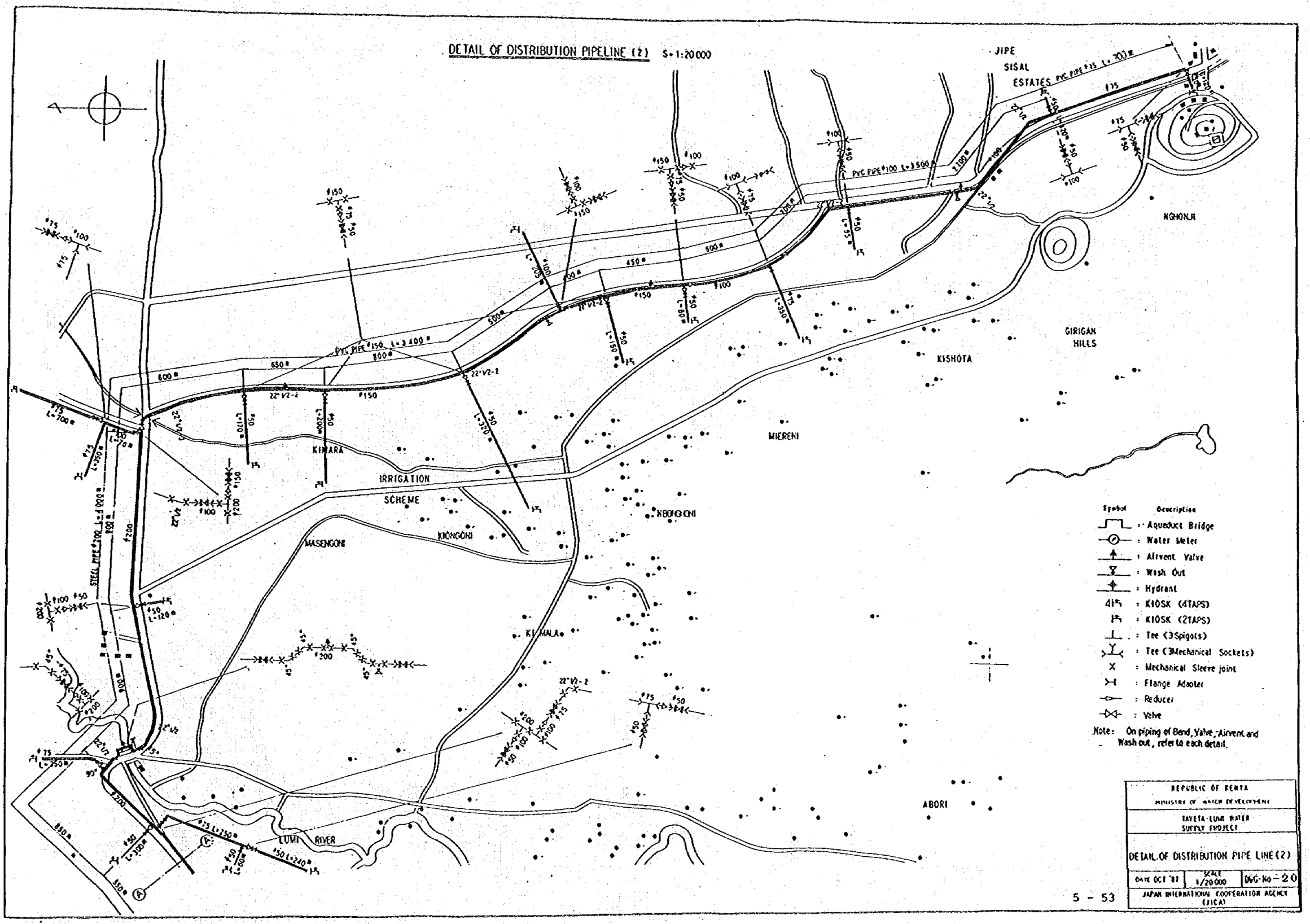
DETAIL OF DISTRIBUTION PIPELINE (2) S=1:20000
JIPE
SISAL
ESTATES
NGHONJI
GIRIGAN
HILLS
KISHOTA
MIERENI
KIMARA
IRRIGATION
SCHEME
NBONGONI
KIONGONI
MASENGONI
KIMALA
ABORI
LUMI RIVER
STEEL PIPE
PVC PIPE
Symbol
Description
: Aqueduct Bridge
: Water Meter
: Airvent Valve
: Wash Out
: Hydrant
: KIOSK (4TAPS)
: KIOSK (2TAPS)
: Tee (3Spigots)
: Tee (3Mechanical Sockets)
: Mechanical Sleeve joint
: Flange Adapter
: Reducer
: Valve
Note: On piping of Bend, Valve, Airvent and Wash out, refer to each detail.
REPUBLIC OF KENYA
MINISTRY OF WATER DEVELOPMENT
TAVETA-LUMI WATER SUPPLY PROJECT
DETAIL OF DISTRIBUTION PIPE LINE (2)
DATE OCT '87
SCALE 1/20000
DWG No - 20
JAPAN INTERNATIONAL COOPERATION AGENCY (JICA)

DETAIL OF DISTRIBUTION PIPELINE (3) S = 1:20000

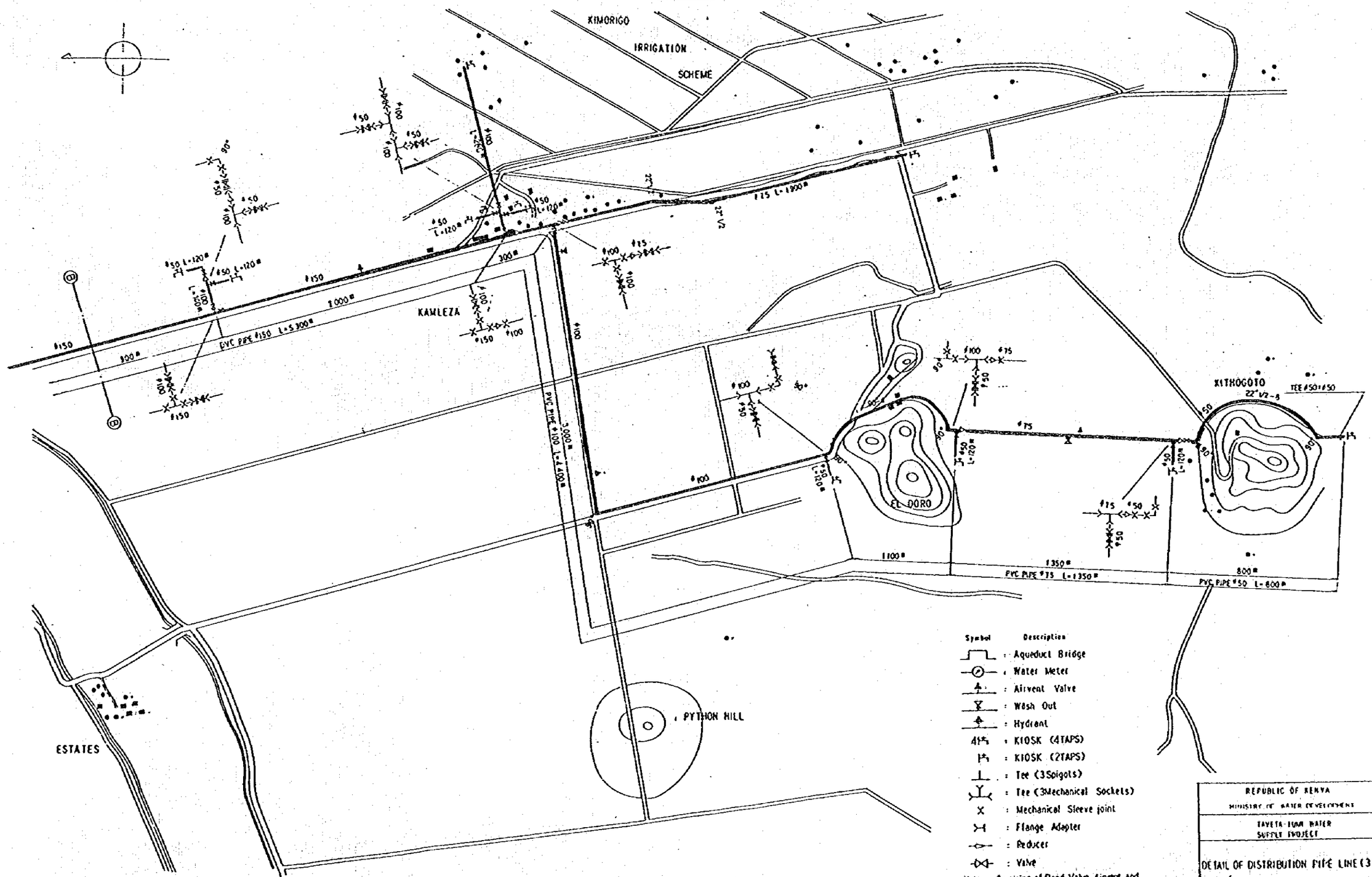

DISTRIBUTION PIPE LINE NETWORK PLAN IN TAVETA TOWN 1:8 000

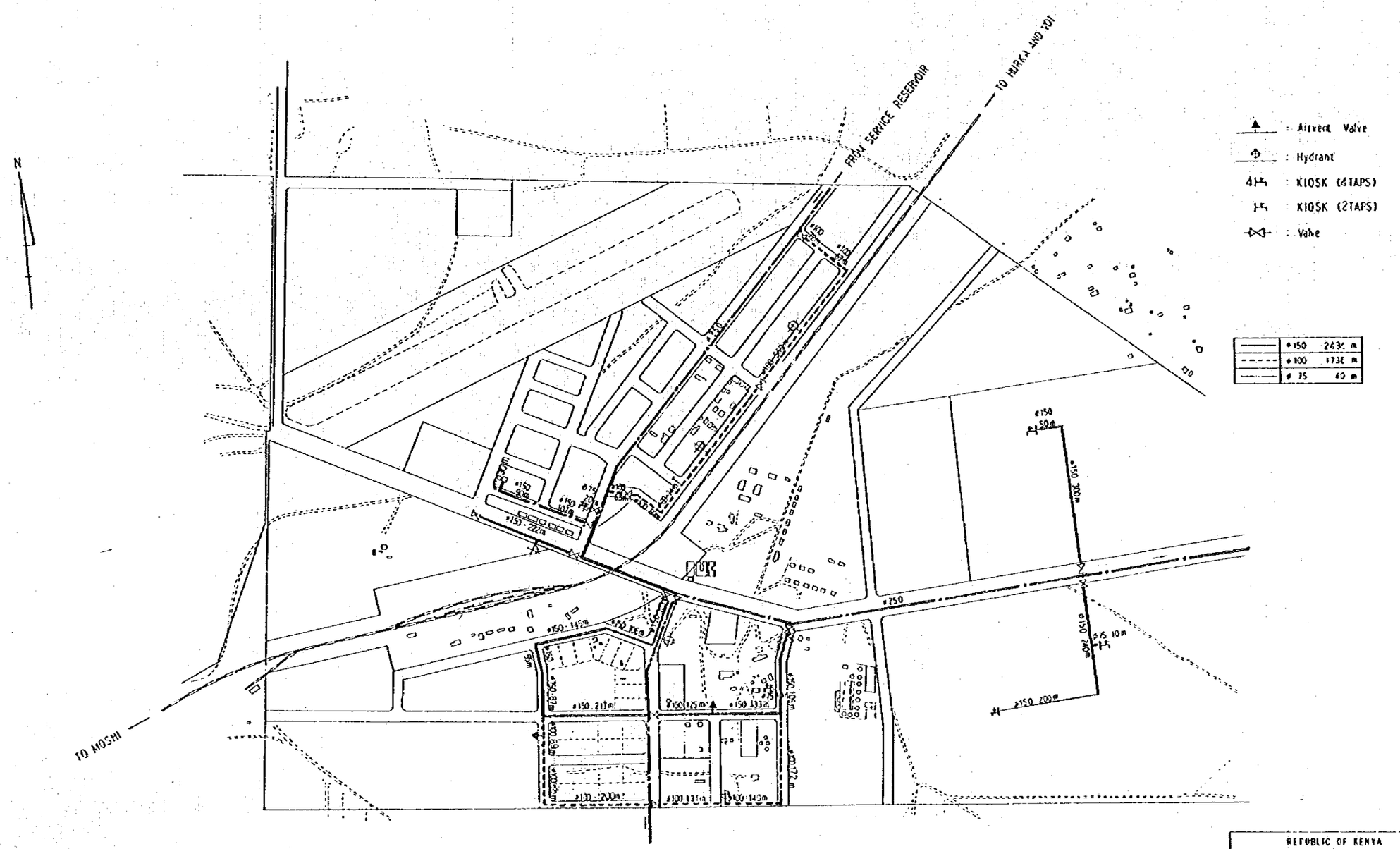

REPUBLIC OF KENYA	
MINISTRY OF WATER DEVELOPMENT	
TAVETA-LUMI WATER SUPPLY PROJECT	
DISTRIBUTION PIPE LINE NETWORK PLAN IN TABETA TOWN	
DATE OCT '87	SCALE 1/8000	DWG-No-22
JAPAN INTERNATIONAL COOPERATION AGENCY (JICA)	

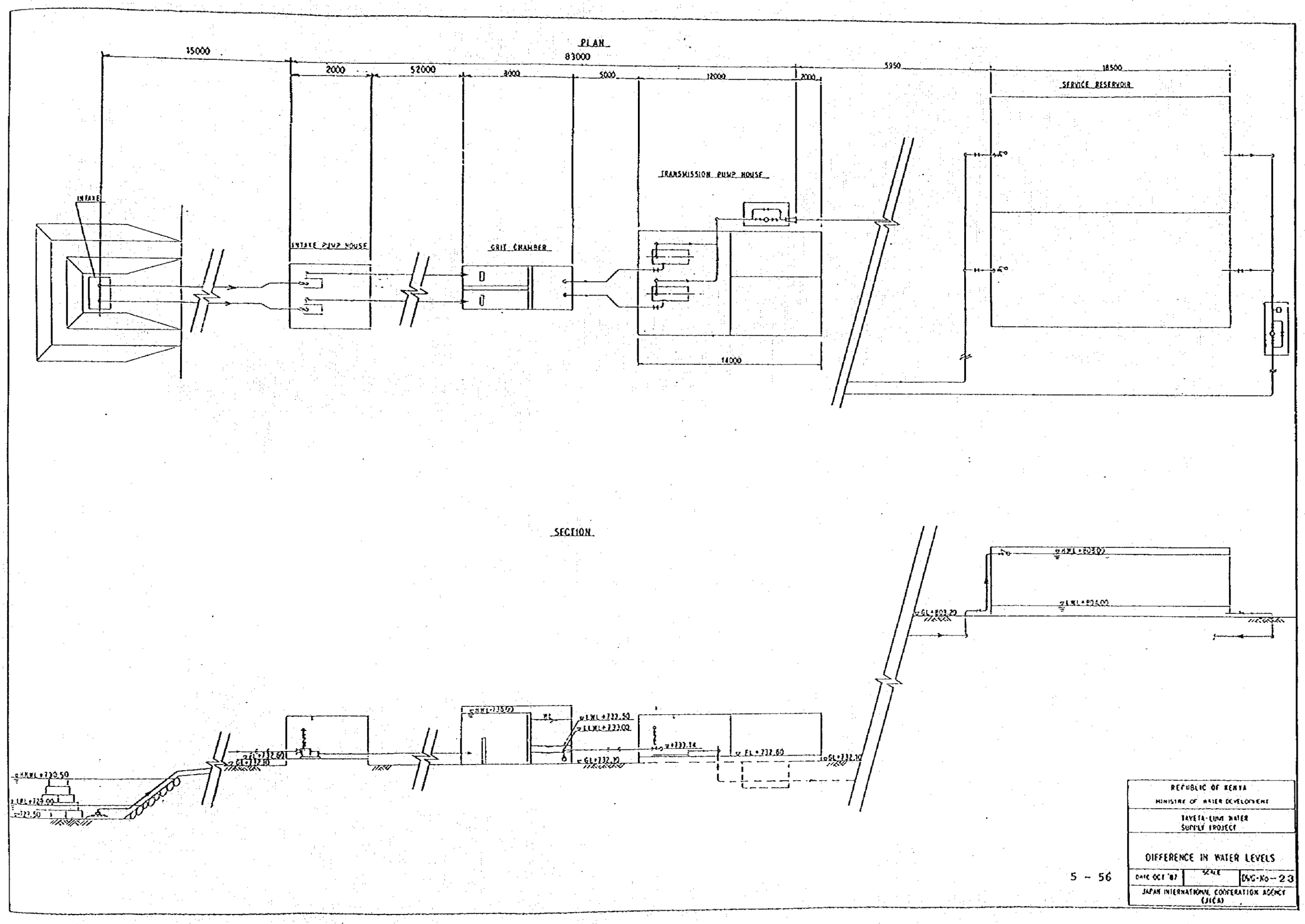
PLAN
15000
83000
2000
52000
3000
5000
12000
2000
5950
18500
SERVICE RESERVOIR
INTAKE
INTAKE PUMP HOUSE
GRIT CHAMBER
TRANSMISSION PUMP HOUSE
14000
SECTION
HWL+730.50
LWL+729.00
+722.50
GL+732.60
GL+732.10
HWL+735.00
FL
LWL+733.50
LWL+733.00
GL+732.10
+733.14
FL+732.60
GL+732.10
HWL+803.00
LWL+802.00
GL+803.20
REPUBLIC OF KENYA
MINISTRY OF WATER DEVELOPMENT
TAVETA-LUMI WATER SUPPLY PROJECT
DIFFERENCE IN WATER LEVELS
DATE OCT '87
SCALE
DWG-No-23
JAPAN INTERNATIONAL COOPERATION AGENCY (JICA)

ARRANGEMENT FOR INTAKE AREA S・1/500

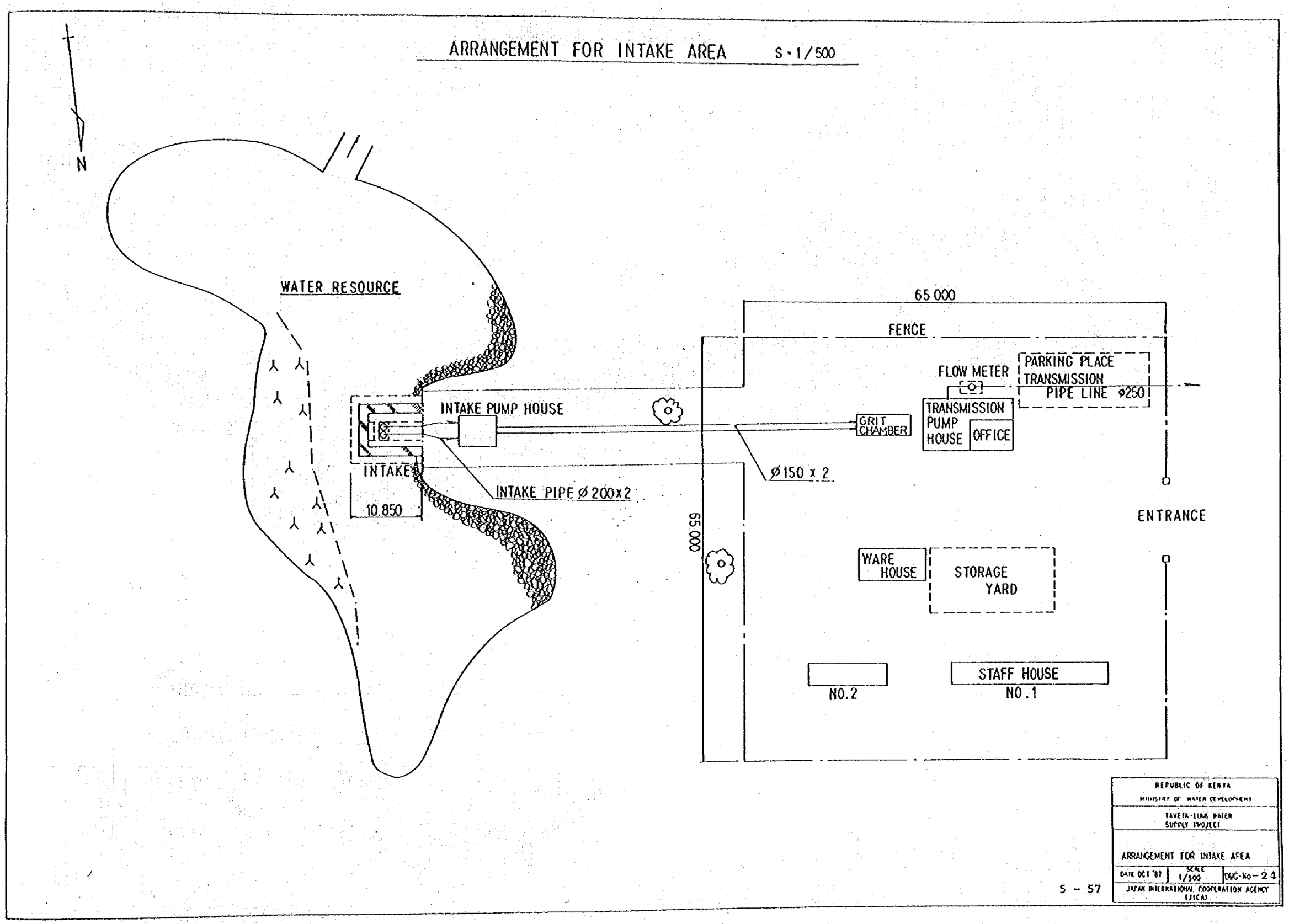

WATER INTAKE POINT

PLAN 1:100

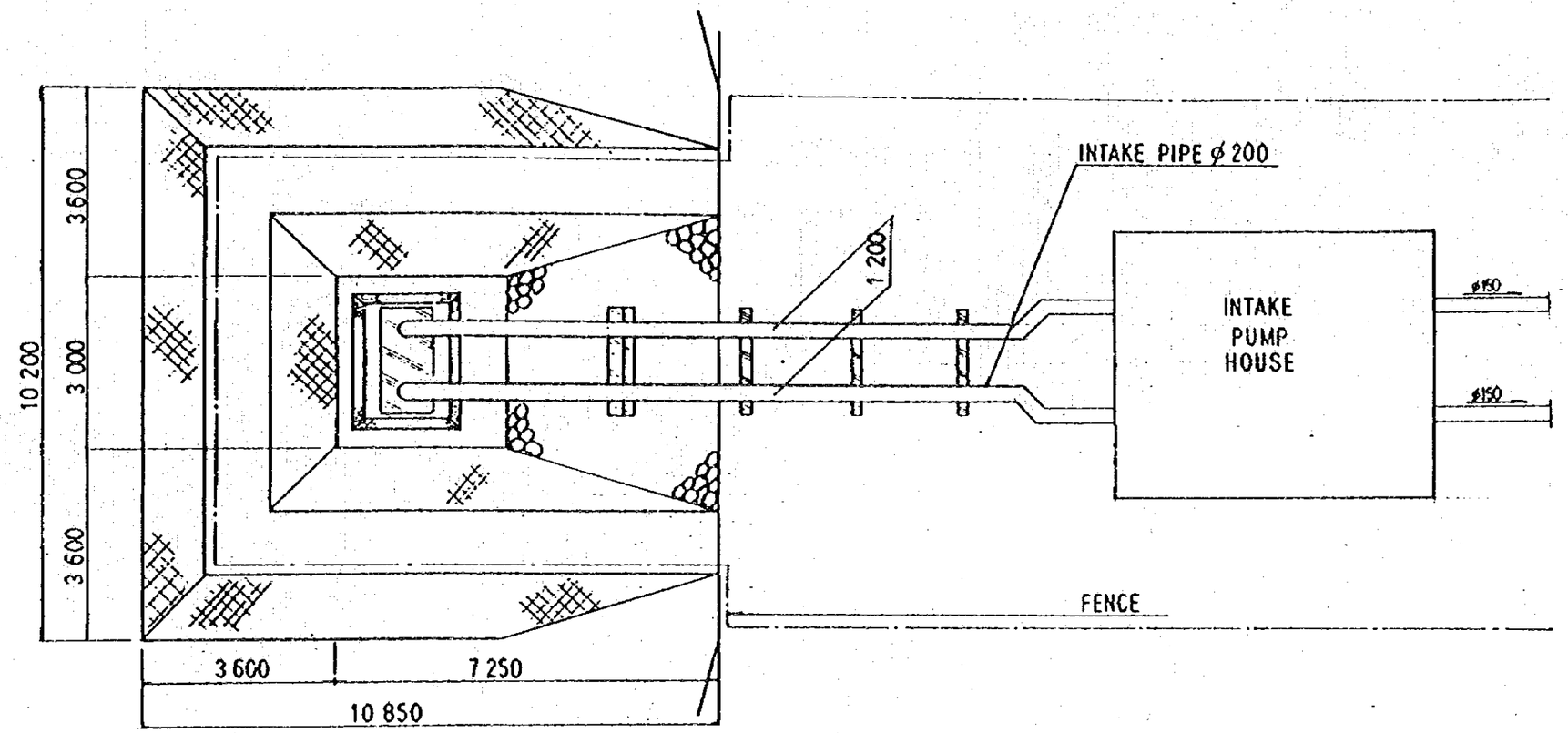

SECTION 1:100

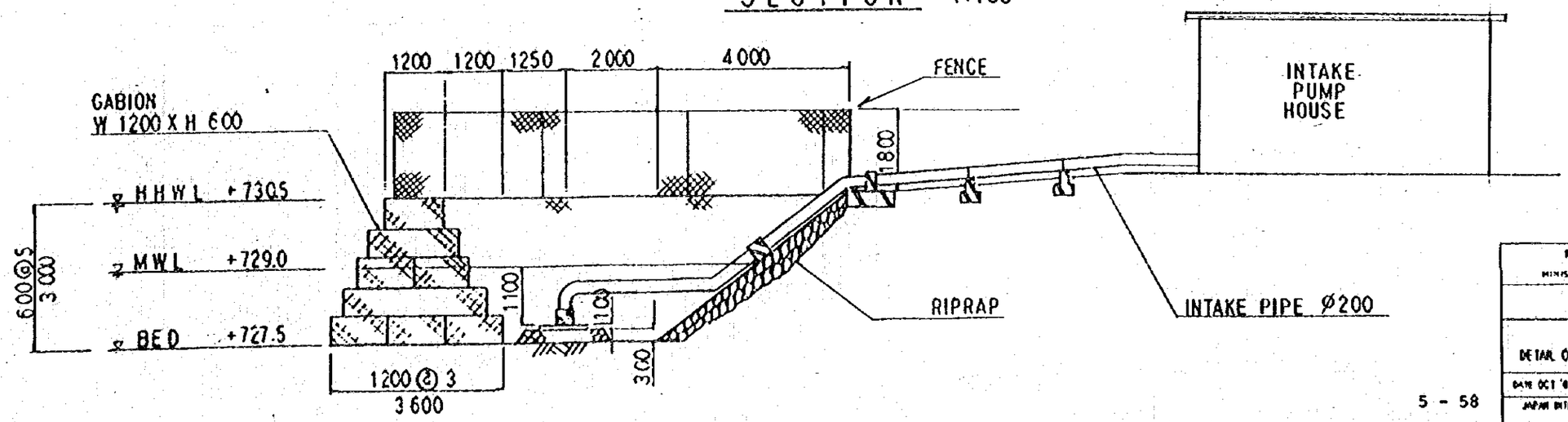

REPUBLIC OF KENYA	
MINISTRY OF WATER DEVELOPMENT	
TAVETA-LUMI WATER SUPPLY PROJECT	
DETAIL OF WATER INTAKE POINT	
DATE OCT '87	SCALE 1/100	DWG-No-25
JAPAN INTERNATIONAL COOPERATION AGENCY (JICA)	

INTAKE PUMP 1:50

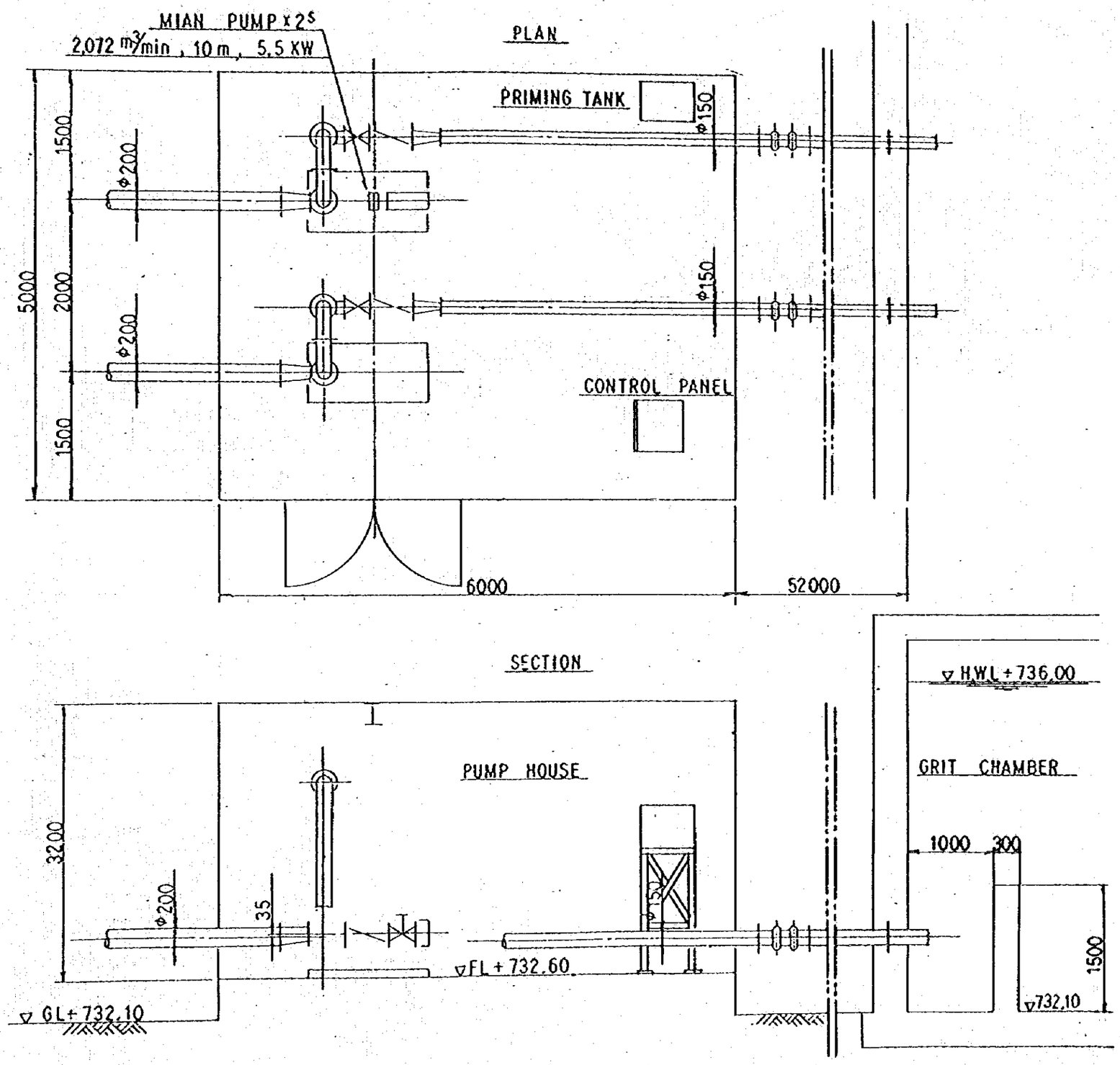

REPUBLIC OF KENYA
MINISTRY OF WATER DEVELOPMENT
TAVETA-LUMI WATER SUPPLY PROJECT

INTAKE PUMP

DATE OCT '87	SCALE 1/50	DWG-No-26

JAPAN INTERNATIONAL COOPERATION AGENCY (JICA)

GRIT CHAMBER

PLAN SCALE 1:100

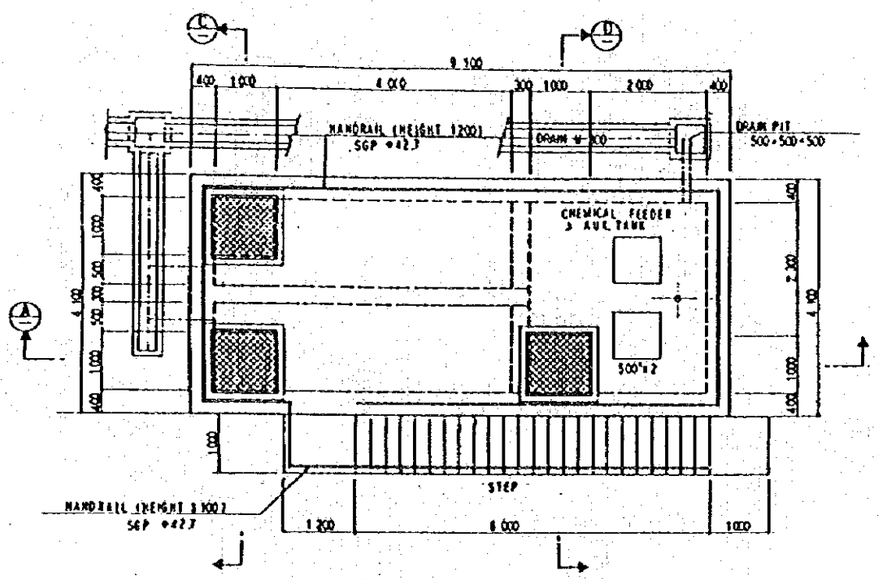

SECTION (A) SCALE 1:100

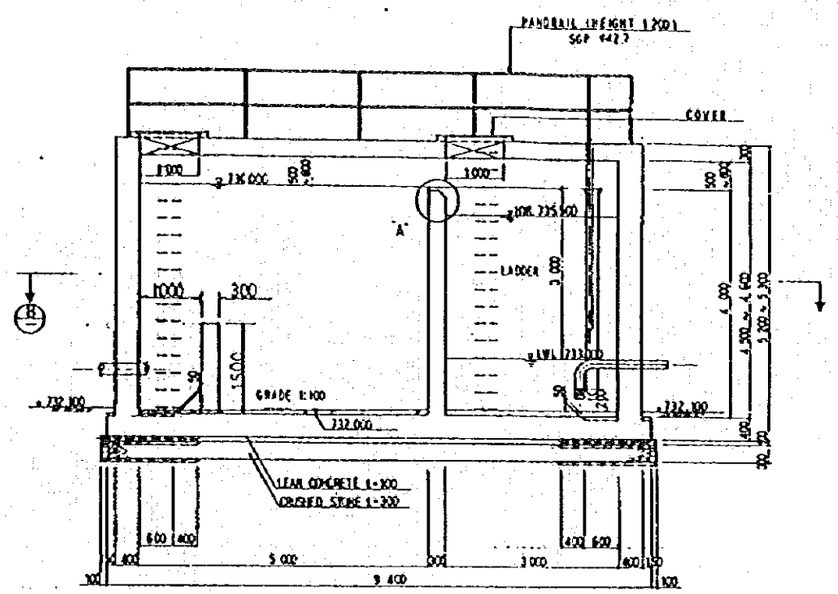

DETAIL OF FLOOR SCALE 1:40

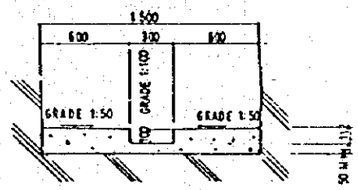

DETAIL OF "A" SCALE 1:20

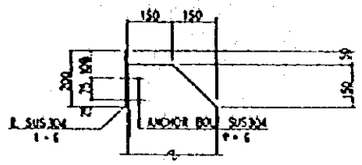

SECTION (B) SCALE 1:100

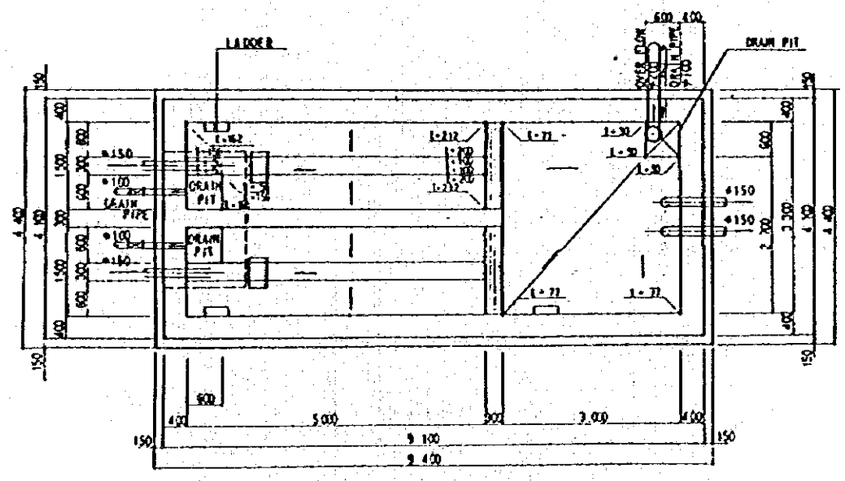

SECTION (C) SCALE 1:100

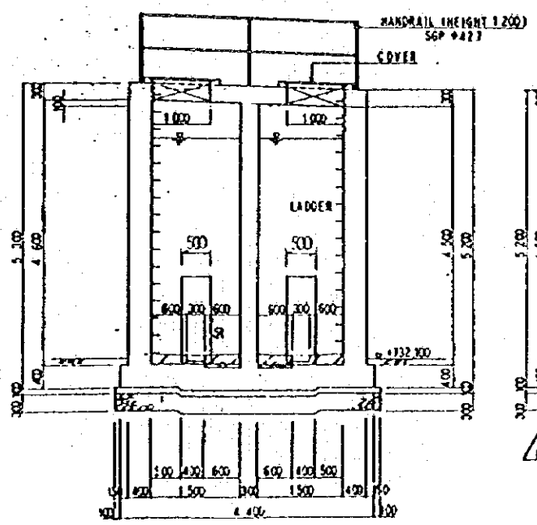

SECTION (D) SCALE 1:100

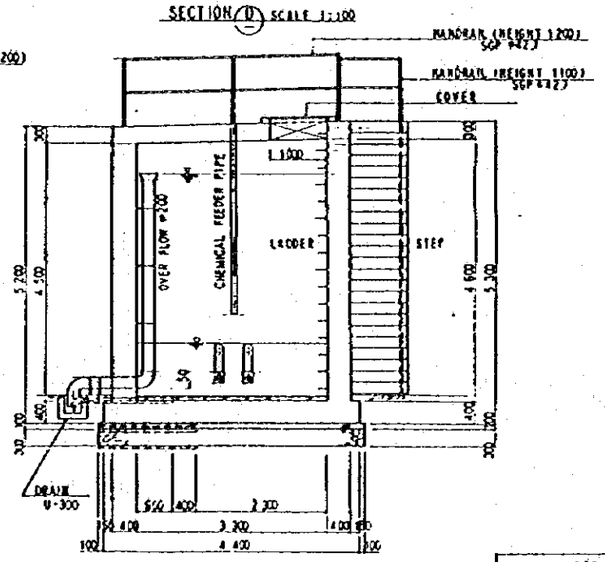

REPUBLIC OF KENYA MINISTRY OF WATER DEVELOPMENT	
TAVETA-LUMI WATER SUPPLY PROJECT	
GRIT CHAMBER	
DATE OCT '87 / SCALE	DWG-No-27
JAPAN INTERNATIONAL COOPERATION AGENCY (JICA)	

GRIT CHAMBER

PLAN

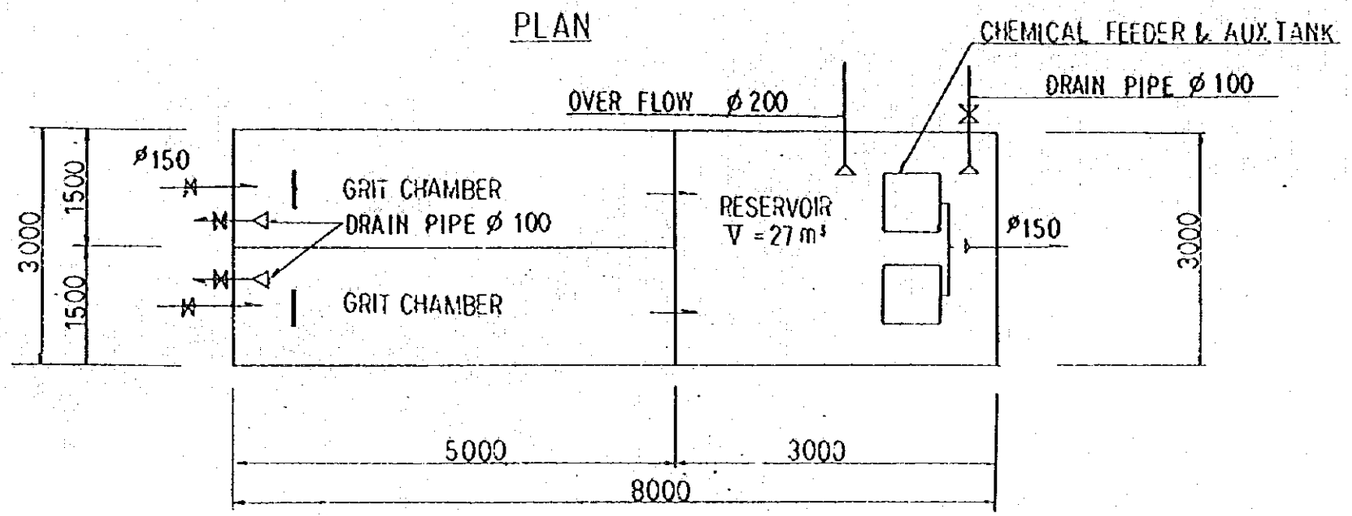

PROFILE

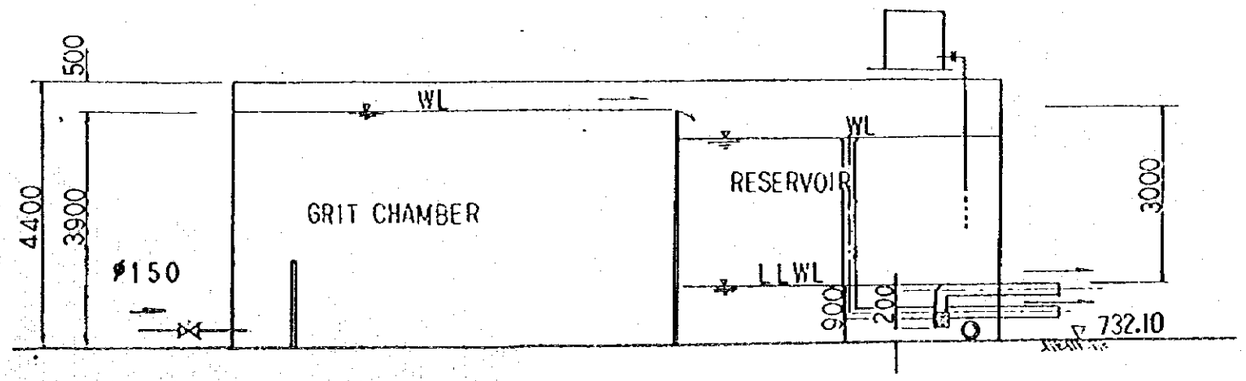

REPUBLIC OF KENYA MINISTRY OF WATER DEVELOPMENT		
TAVETA-LUMI WATER SUPPLY PROJECT		
GRIT CHAMBER		
DATE OCT '87	SCALE	DWG-No-28
JAPAN INTERNATIONAL COOPERATION AGENCY (JICA)		

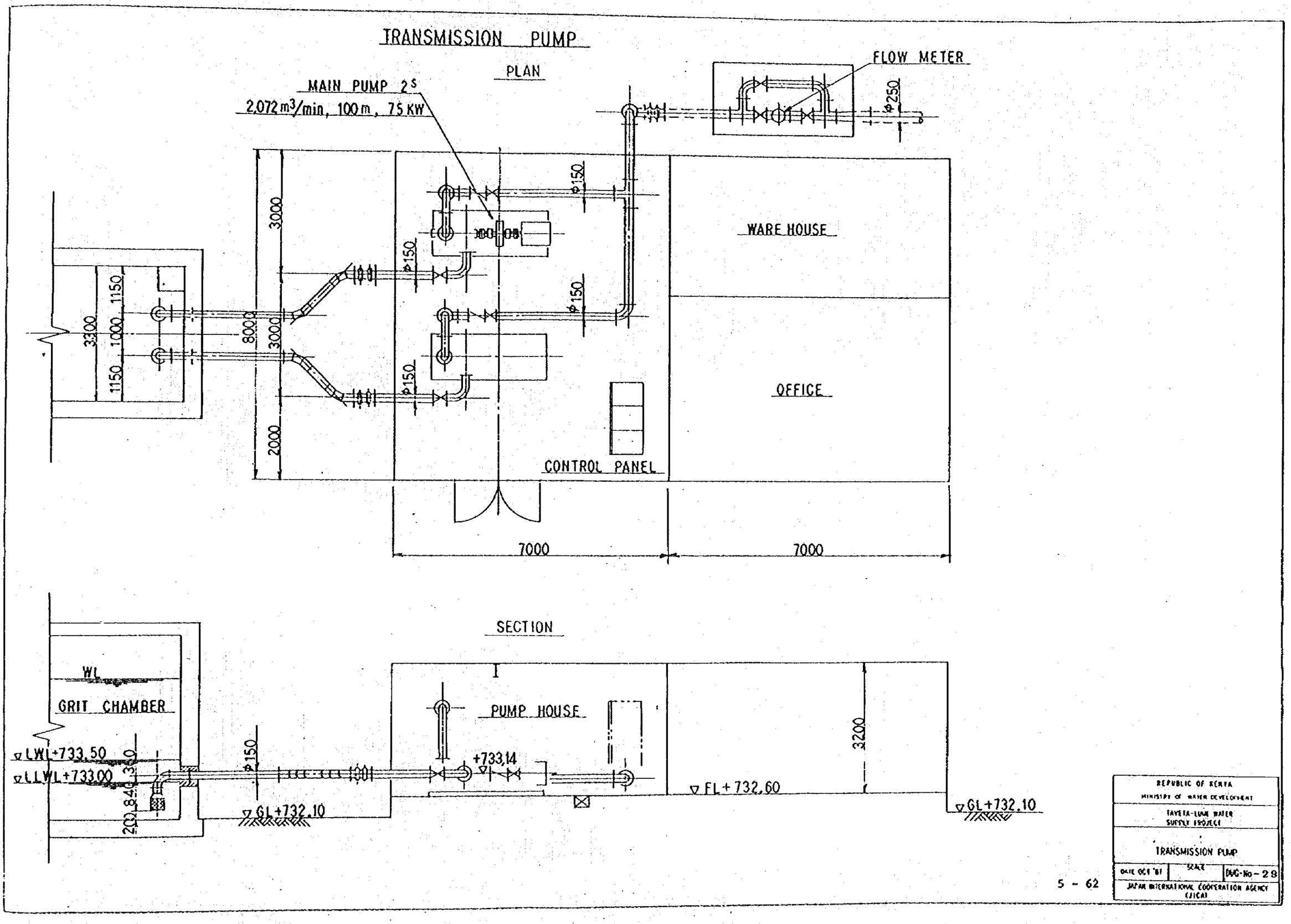
TRANSMISSION PUMP
PLAN
MAIN PUMP 2S
2,072 m3/min, 100 m, 75 KW
FLOW METER
φ250
φ150
WARE HOUSE
OFFICE
CONTROL PANEL
3000
8000
2000
3300
1150
1000
7000
SECTION
WL
GRIT CHAMBER
LWL+733.50
LLWL+733.00
PUMP HOUSE
+733.14
FL+732.60
GL+732.10
3200
REPUBLIC OF KENYA
MINISTRY OF WATER DEVELOPMENT
TAVETA-LUMI WATER SUPPLY PROJECT
TRANSMISSION PUMP
DATE OCT '81
SCALE
DWG-No-29
JAPAN INTERNATIONAL COOPERATION AGENCY (JICA)

SERVICE RESERVOIR

SECTIONAL PLAN SCALE 1:200

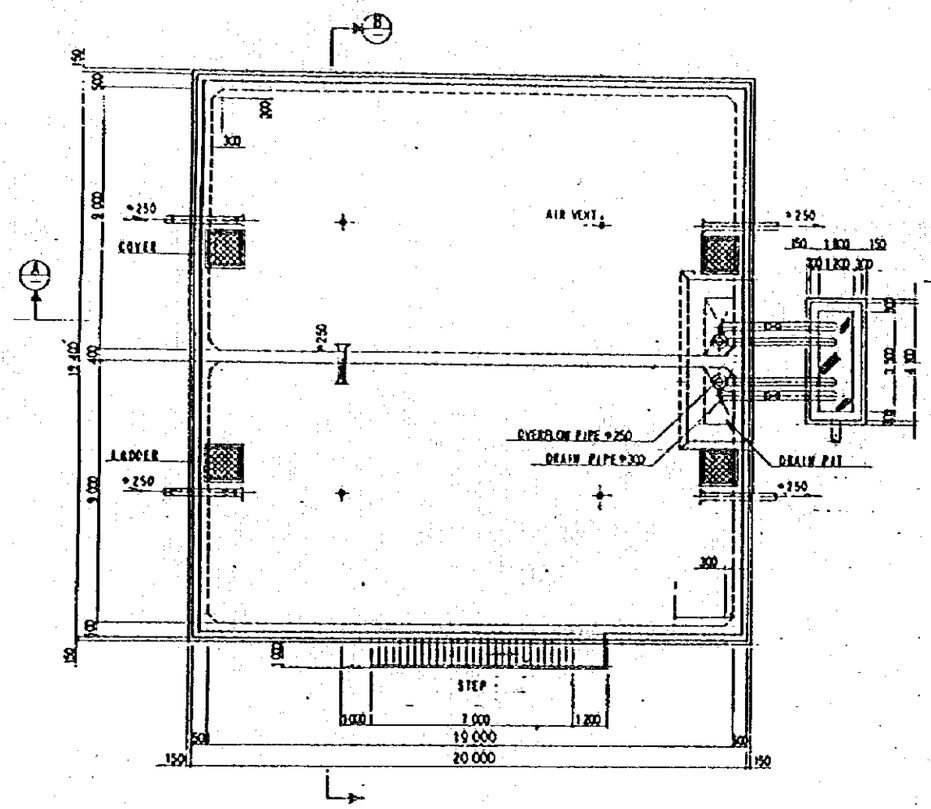

SECTION (B) SCALE 1:200

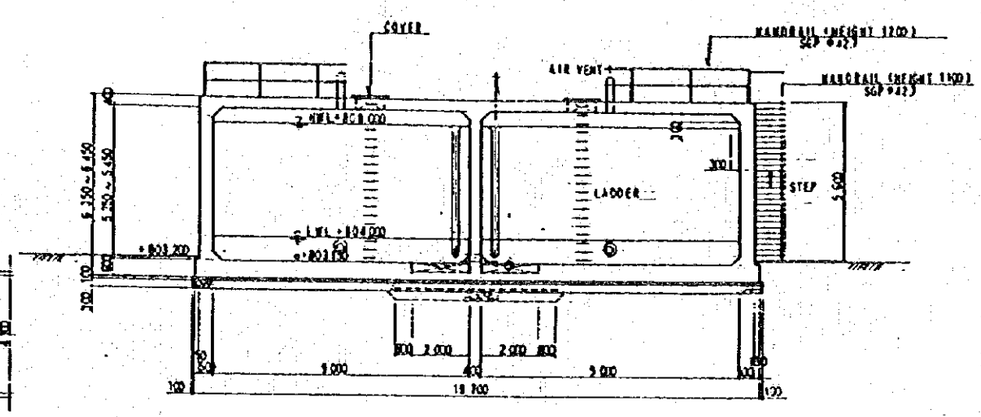

PLAN OF COVER SCALE 1:40

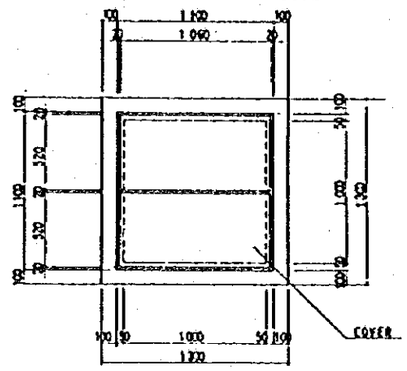

PLAN OF LADDER SCALE 1:20

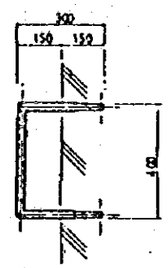

SECTION SCALE 1:20

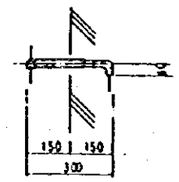

SECTION (A) SCALE 1:200

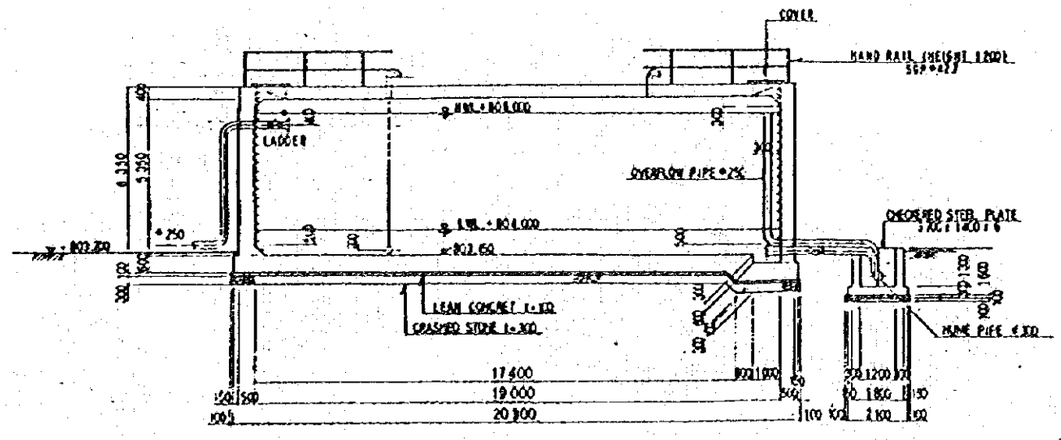

SECTION SCALE 1:40

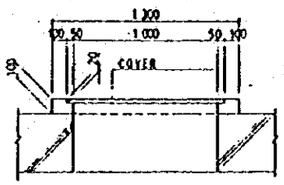

DETAIL SCALE 1:10

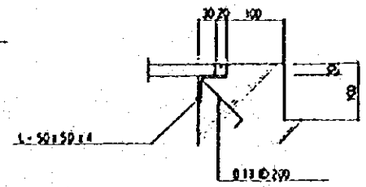

REPUBLIC OF KENYA MINISTRY OF WATER DEVELOPMENT	
TAVETA-LUMI WATER SUPPLY PROJECT	
SERVICE RESERVOIR	
DATE OCT '87 / SCALE	DWG No – 30
JAPAN INTERNATIONAL COOPERATION AGENCY (JICA)	

SERVICE RESERVOIR

PLAN S = 1/200

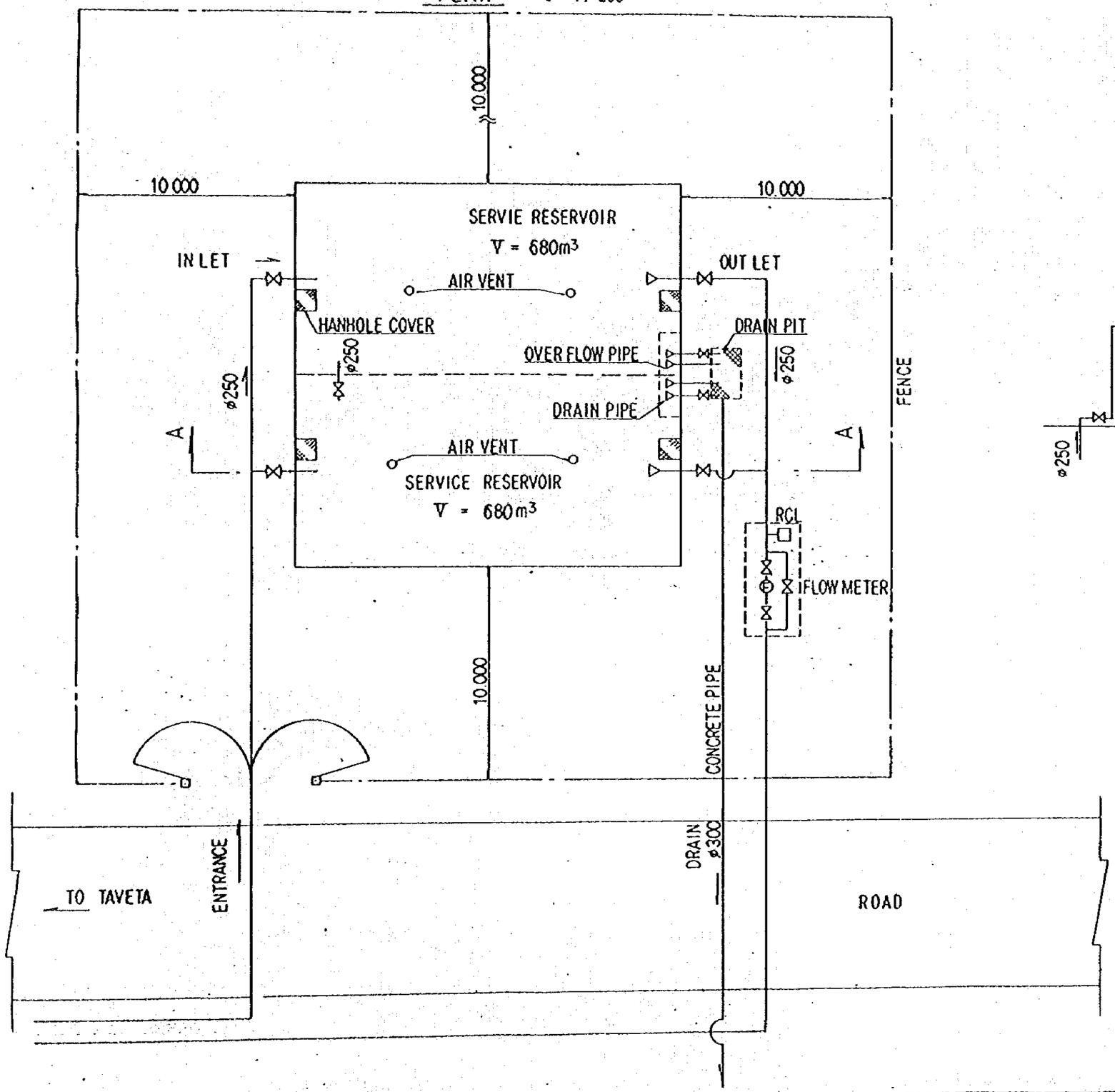

SECTION A – A S = 1/200

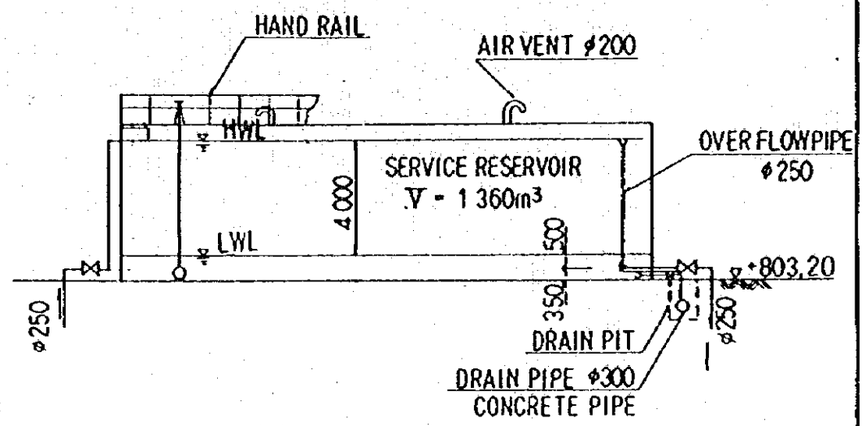

REPUBLIC OF KENYA MINISTRY OF WATER DEVELOPMENT		
TAVETA-LUMI WATER SUPPLY PROJECT		
SERVICE RESERVOIR		
DATE OCT '87	SCALE 1/200	DWG-No – 3 1
JAPAN INTERNATIONAL COOPERATION AGENCY (JICA)		

DETAIL OF AQUEDUCT BRIDGE AT LUMI RIVER (IRRIGATION CHANNEL) S=1:100

PLAN

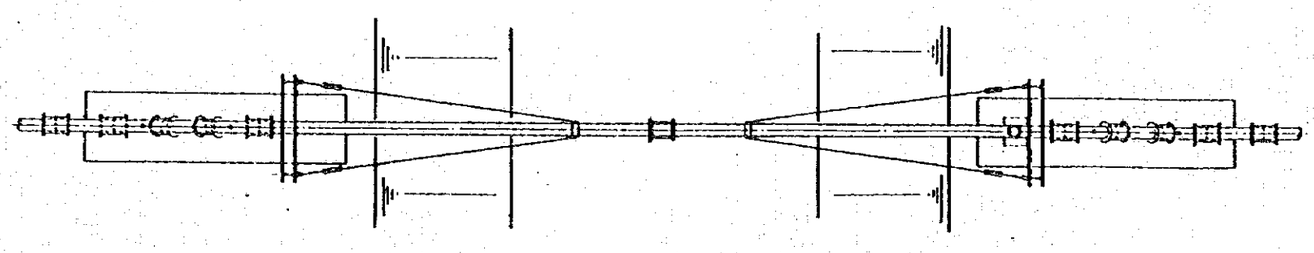

PROFILE

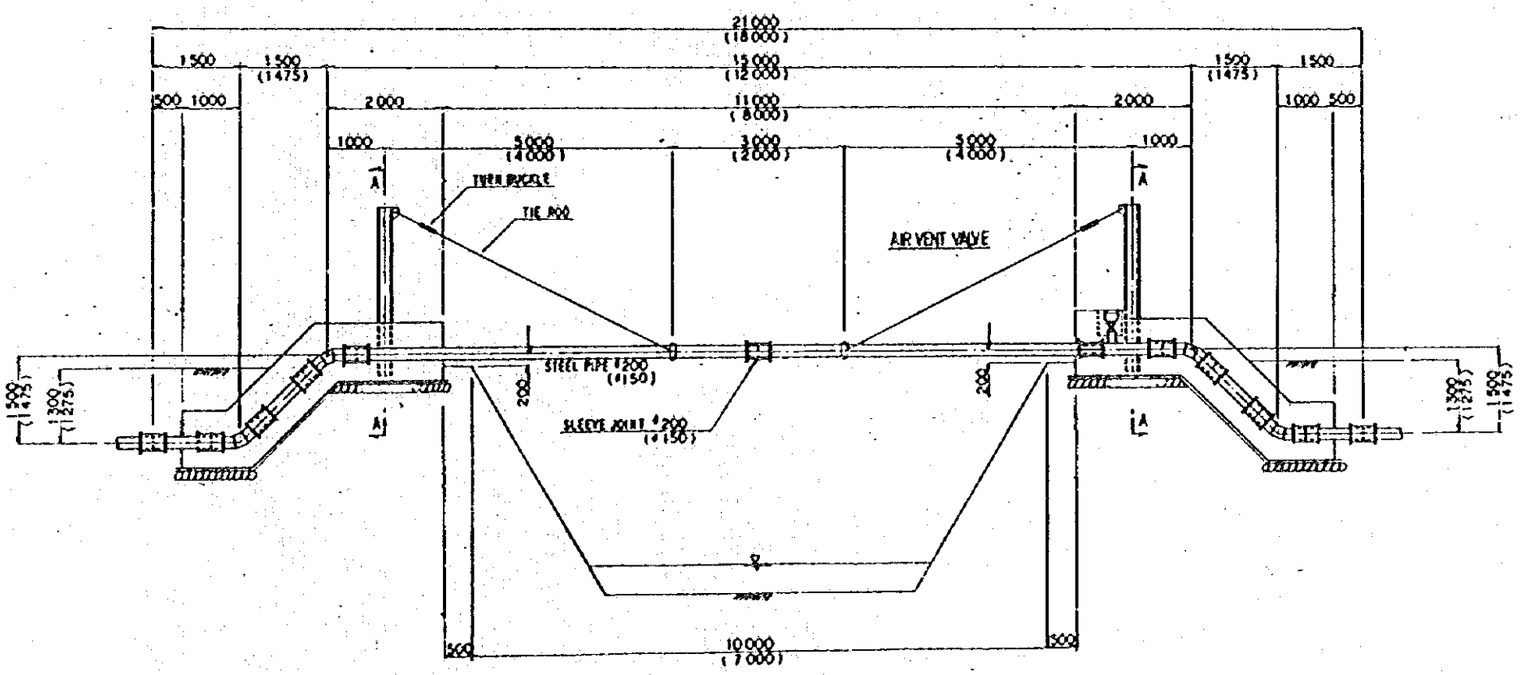

A-A SECTION S=1:60

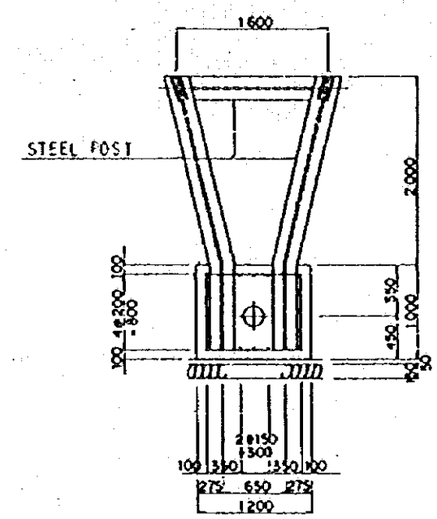

Note : Dimension in ( ) is in case of Irrigation Channel.

REPUBLIC OF KENYA MINISTRY OF WATER DEVELOPMENT		
TAVETA-LUMI WATER SUPPLY PROJECT		
DETAIL OF AQUEDUCT BRIDGE AT LUMI RIVER (IRRIGATION CHANNEL)		
DATE OCT '87	SCALE 1/100	DWG-No-32
JAPAN INTERNATIONAL COOPERATION AGENCY (JICA)		

THRUST BLOCK AND TYPICAL FITTING OF PIPELINE

BEND 90°

PLAN

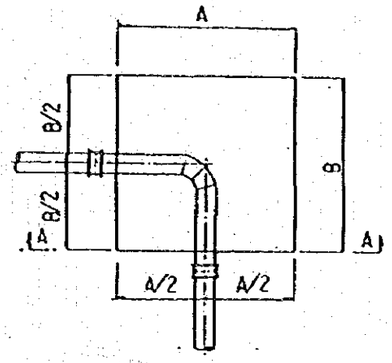

A-A SECTION

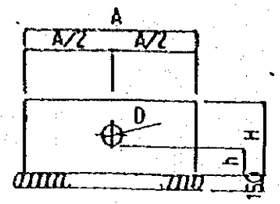

DIMENSION

UNIT:mm

D	A	B	H	h
250	2,300	2,300	900	300
200	1,800	1,800	750	300
150	1,400	1,400	800	300
100	1,000	1,000	500	250
75	750	750	500	250

TEE

PLAN

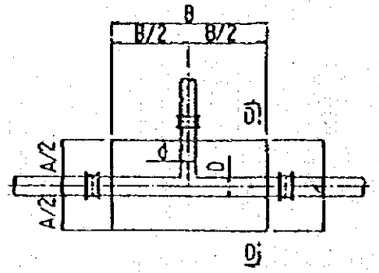

DIMENSION

UNIT:mm

D x d	A	B	H	h
250 x 250	1,850	2,550	800	300
x 200				
x 150				
x 100				
200 x 200	1,500	2,100	800	350
x 150				
x 100				
150 x 150	950	1,650	900	350
x 100				
x 75				
100 x 100	700	1,300	800	300
x 75				
75 x 75	600	1,100	500	250

D-D SECTION

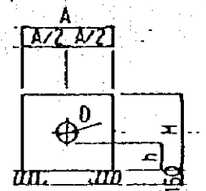

BEND 45°

PLAN

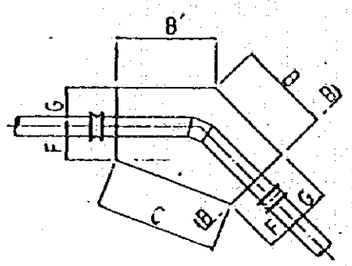

B-B SECTION

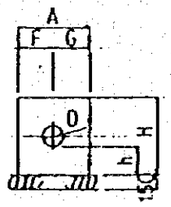

DIMENSION

UNIT:mm

D	A	B	B'	C	F	G	H	h
250	1,000	1,111	1,156	1,456	420	510	807	300
200	730	850	1,005	1,229	350	380	800	350
150	570	773	831	1,046	270	300	653	300
100	420	504	682	839	200	230	457	300
75	400	384	652	838	190	210	200	150

BEND 22°1/2 11°1/4

PLAN

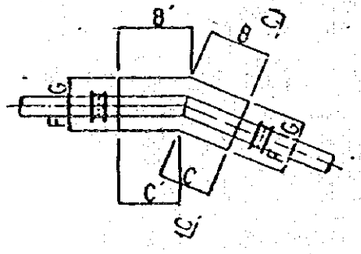

C-C SECTION

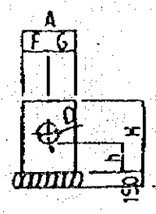

DIMENSION

BEND 22°1/2

UNIT:mm

D	A	B	B'	C	C'	F	G	H	h
250	620	885	710	541	506	300	320	1,047	450
200	530	852	750	546	802	250	280	735	300
150	470	800	881	530	587	220	250	650	300
100	420	540	617	465	523	200	220	310	190
75	400	547	615	467	525	190	210	300	190

BEND 11°1/4

UNIT:mm

D	A	B	B'	C	C'	F	G	H	h
250	520	832	877	575	620	300	320	515	150
200	530	826	880	575	631	250	280	610	150
150	470	577	635	534	592	220	250	390	150
100	420	527	585	488	556	200	230	310	150
75	400	525	584	486	557	190	210	290	150

TYPICAL CROSS SECTION

STEEL PIPE

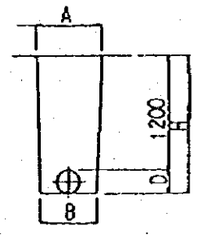

DIMENSION

UNIT:mm

D	A	B	H
250	700	800	1,150
200	700	800	1,400

PVC

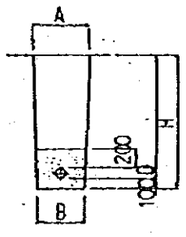

DIMENSION

UNIT:mm

D	A	B	H
150	800	500	1,650
100	800	500	1,450
75	800	500	1,375
50	800	500	1,350

REPUBLIC OF KENYA
MINISTRY OF WATER DEVELOPMENT
TAVETA-LUMI WATER SUPPLY PROJECT

THRUST BLOCK AND TYPICAL FITTING OF PIPE LINE

DATE OCT '87 | SCALE | DWG-No-33

JAPAN INTERNATIONAL COOPERATION AGENCY (JICA)

TYPICAL FITTING OF PIPELINE (1)

VALVE (with LOCK)

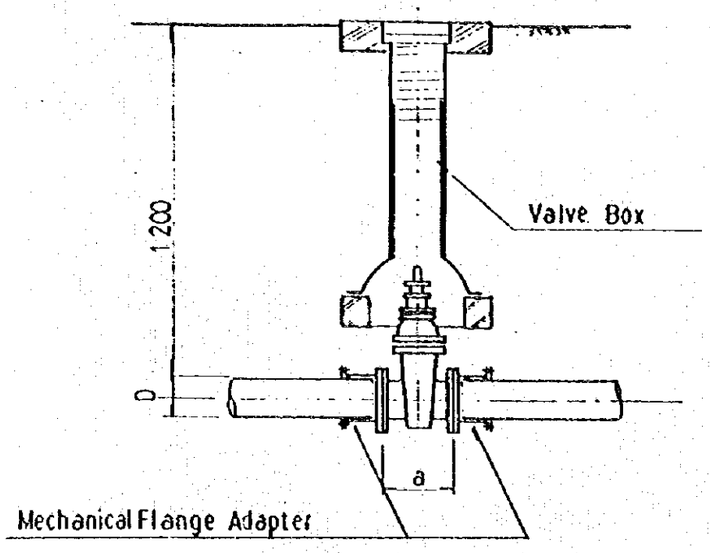

	a (mm)	D (mm)
PVC ø50	180	60
〃 ø75	240	90
〃 ø100	250	110
〃 ø150	280	160
Steel ø200	300	200
〃 ø250	380	250

WASH OUT (with LOCK)

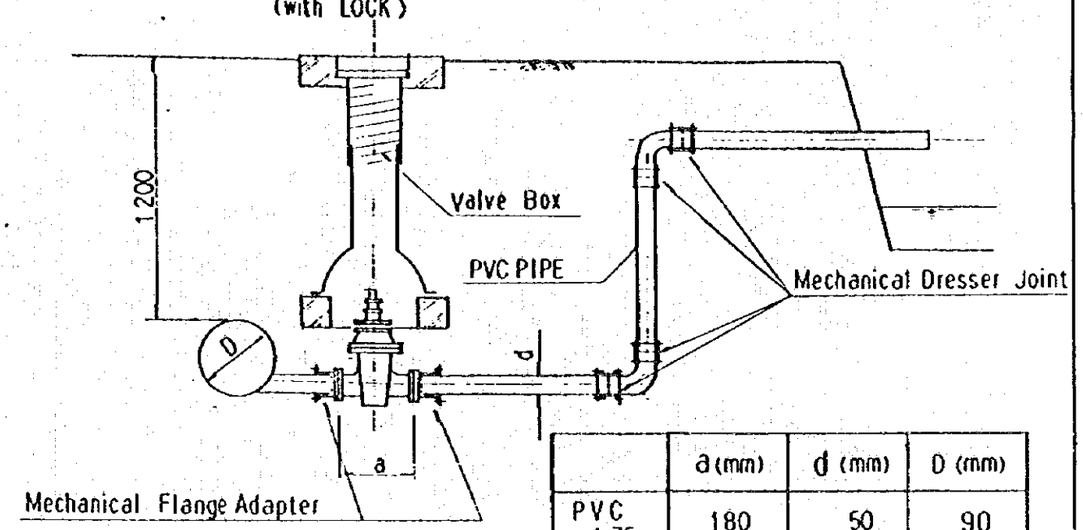

	a (mm)	d (mm)	D (mm)
PVC ø75	180	50	90
〃 ø100	180	50	110
〃 ø150	240	75	160
Steel ø200	250	100	200
〃 ø250	250	100	250

AIR VALVE

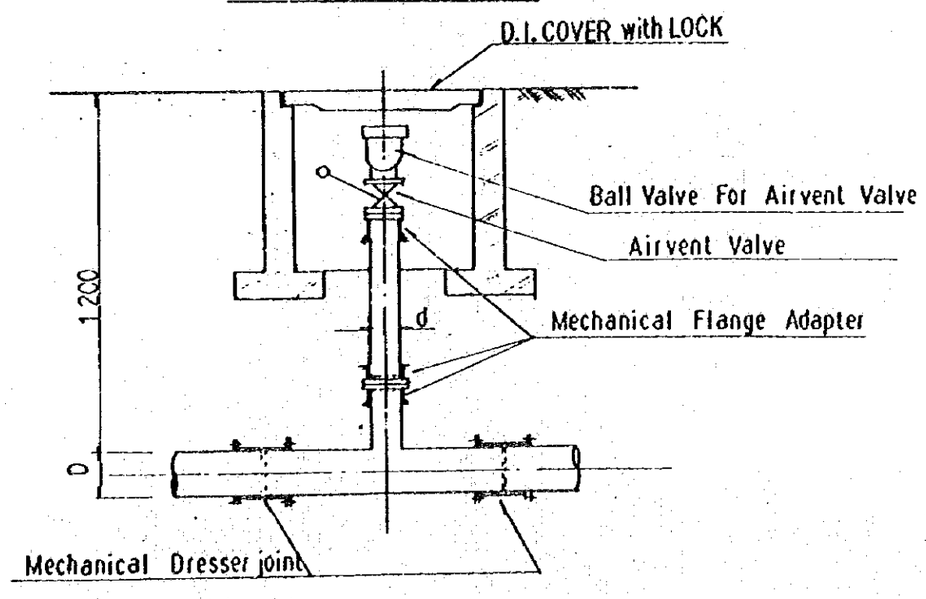

	d	D (mm)
PVC ø75	50	90
〃 ø100	50	110
〃 ø150	50	160
Steel ø200	75	200
〃 ø250	75	250

REPUBLIC OF KENYA
MINISTRY OF WATER DEVELOPMENT
TAVETA-TUMI WATER SUPPLY PROJECT
TYPICAL FITTING OF PIPE LINE (1)
DATE OCT '81 | SCALE | DWG-No-34
JAPAN INTERNATIONAL COOPERATION AGENCY (JICA)

TYPICAL FITTING OF PIPELINE (2)

FIRE HYDRANT

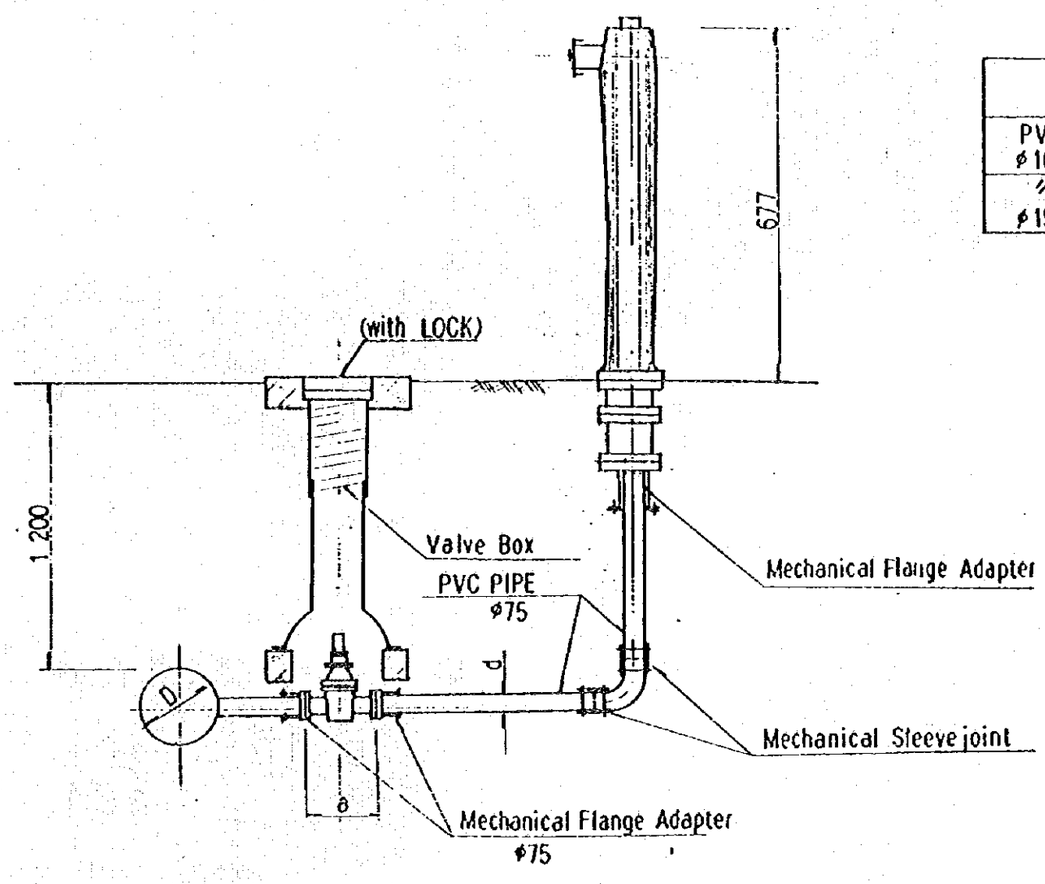

	a (mm)	d (mm)	D (mm)
PVC φ100	240	75	110
〃 φ150	240	75	160

REPUBLIC OF KENYA
MINISTRY OF WATER DEVELOPMENT
TAVETA-LUMI WATER SUPPLY PROJECT
TYPICAL FITTING OF PIPE LINE (2)
DATE OCT '81 | SCALE | DWG-No-35
JAPAN INTERNATIONAL COOPERATION AGENCY (JICA)

INTAKE PUMP HOUSE

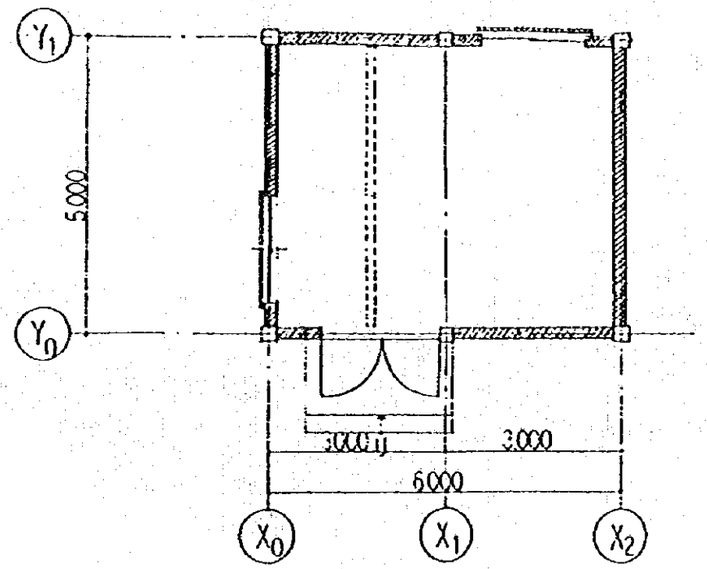

PLAN · SCALE 1:100

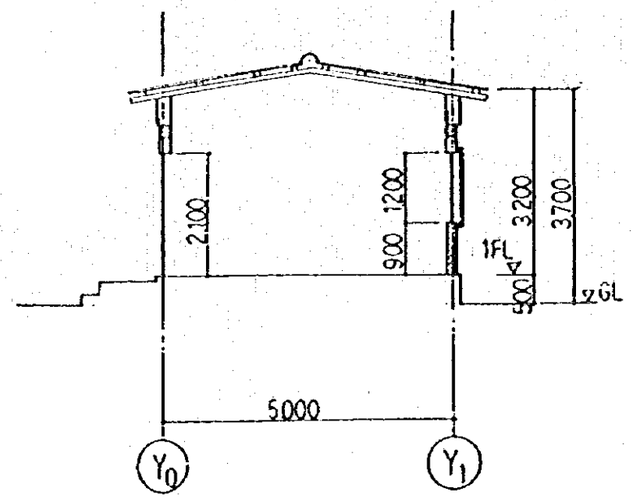

SECTION SCALE 1:100

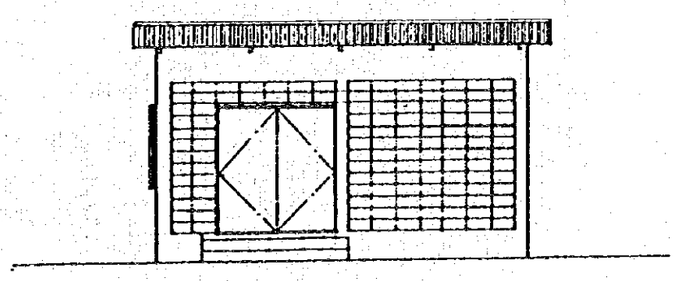

ELEVATION NO.1 SCALE 1:100

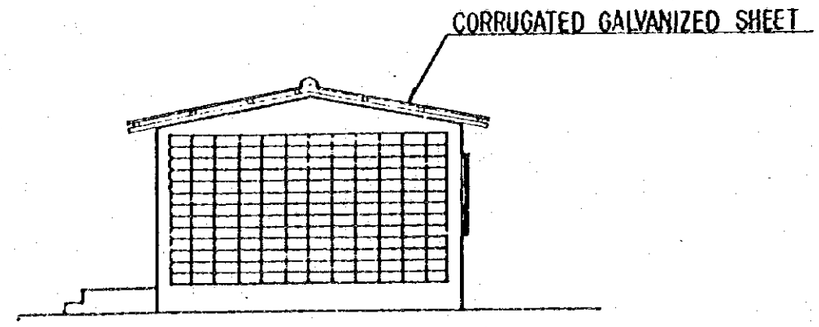

ELEVATION NO2 SCALE 1:100

NOTE : ▨ : BLOCK

: ═══ : HOIST RAIL

REPUBLIC OF KENYA MINISTRY OF WATER DEVELOPMENT	
TAVETA-LUMI WATER SUPPLY PROJECT	
INTAKE PUMP HOUSE	
DATE OCT '81	SCALE 1/100	DWG-No-3 G
JAPAN INTERNATIONAL COOPERATION AGENCY (JICA)	

TRANSMISSION PUMP HOUSE

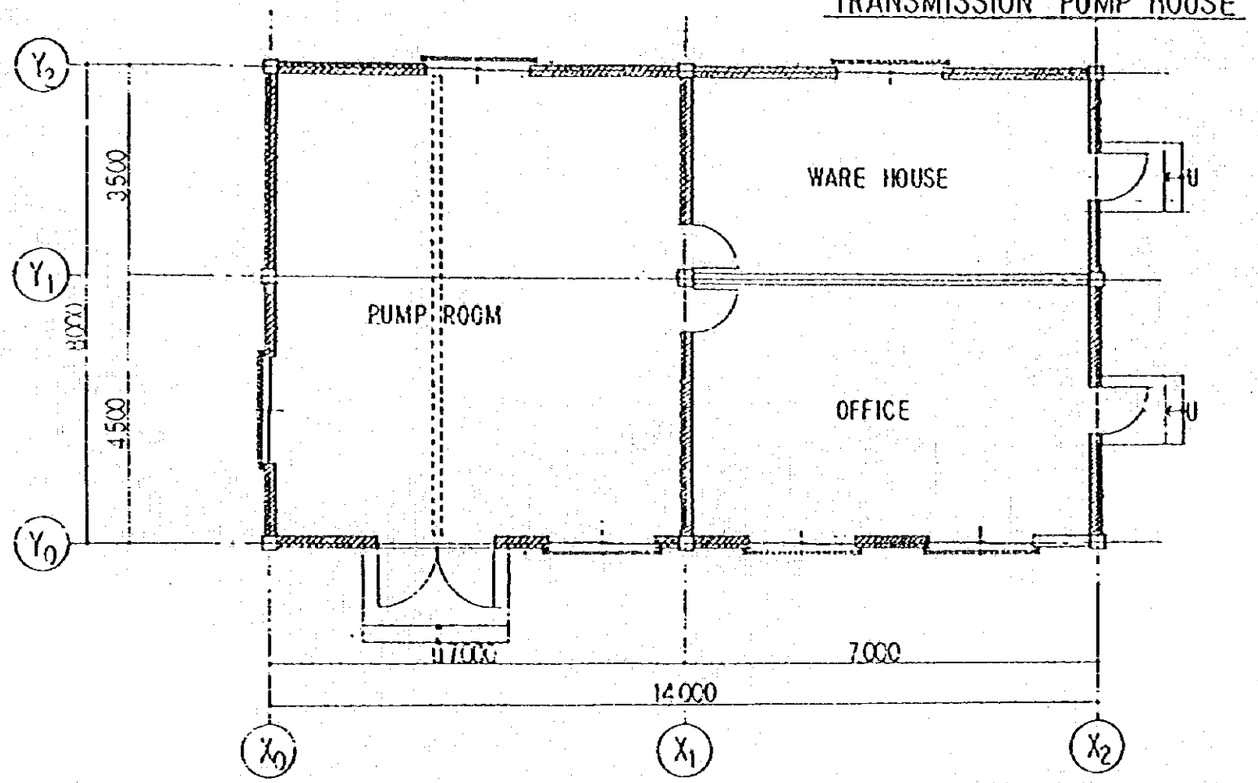

PLAN SCALE 1:100

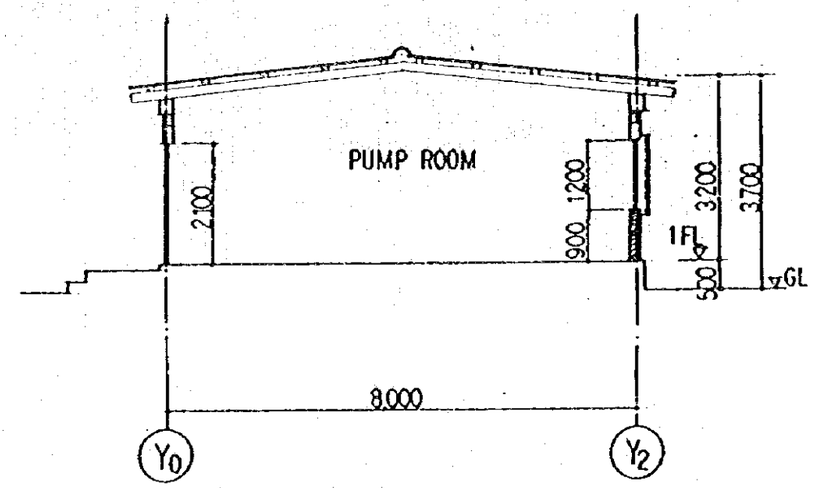

SECTION SCALE 1:100

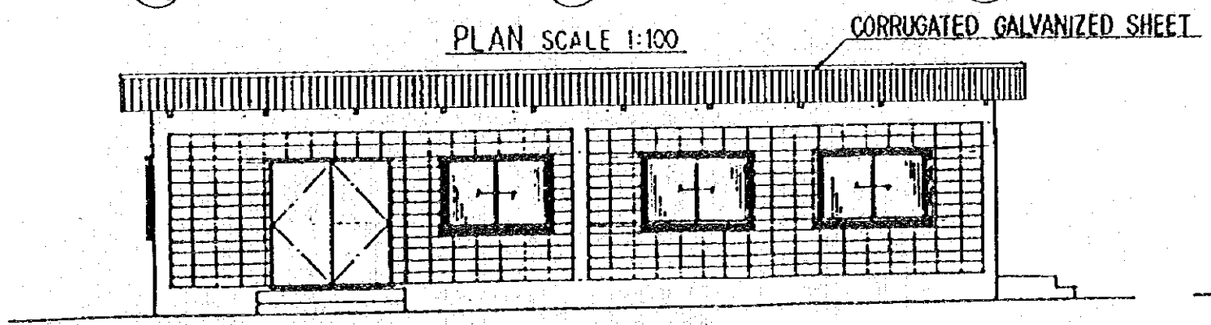

ELEVATION NO.1 SCALE 1:100

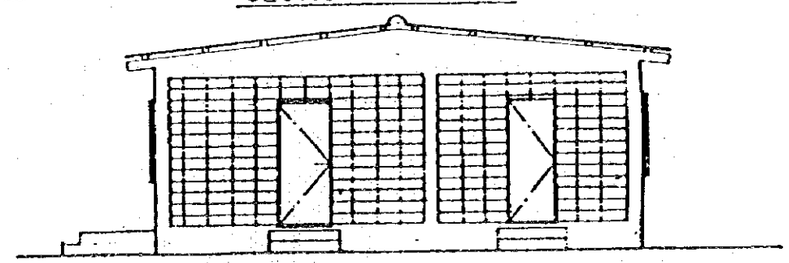

ELEVATION NO2 SCALE 1:100

NOTE : ▨ : BLOCK

: ⋯⋯ : HOIST RAIL

REPUBLIC OF KENYA MINISTRY OF WATER DEVELOPMENT
TAVETA-LUMI WATER SUPPLY PROJECT
TRANSMISSION PUMP HOUSE
DATE OCT '87 | SCALE 1/100 | DWG-No-37
JAPAN INTERNATIONAL COOPERATION AGENCY (JICA)

WARE HOUSE

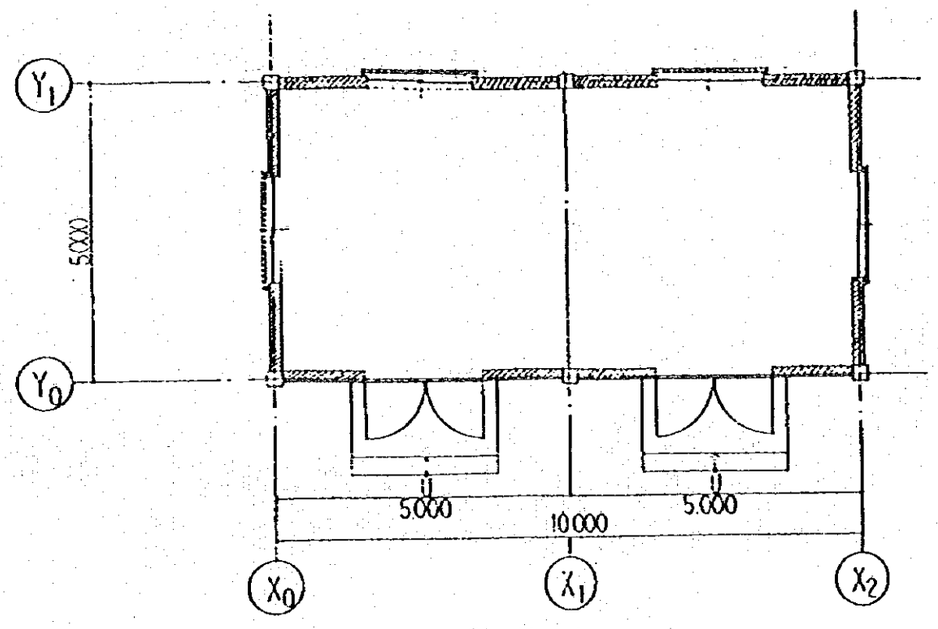

PLAN SCALE 1:100

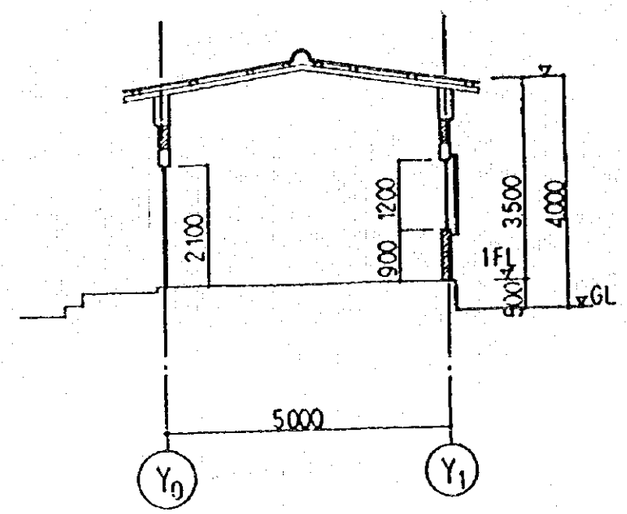

SECTION SCALE 1:100

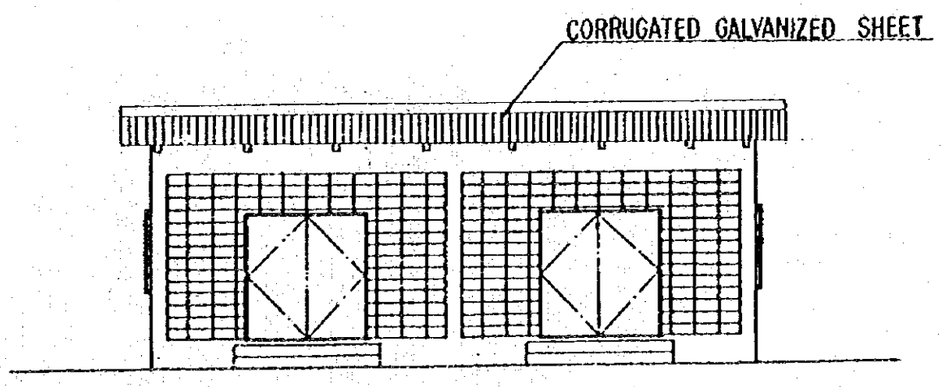

ELEVATION NO.1 SCALE 1:100

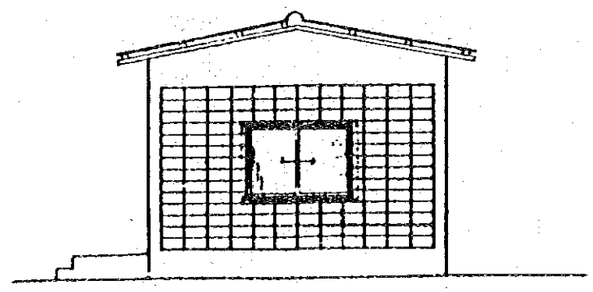

ELEVATION NO.2 SCALE 1:100

NOTE : : BLOCK

REPUBLIC OF KENYA MINISTRY OF WATER DEVELOPMENT		
TAVETA-LUMI WATER SUPPLY PROJECT		
WARE HOUSE		
DATE OCT '87	SCALE 1/100	DWG-No - 3 B
JAPAN INTERNATIONAL COOPERATION AGENCY (JICA)		

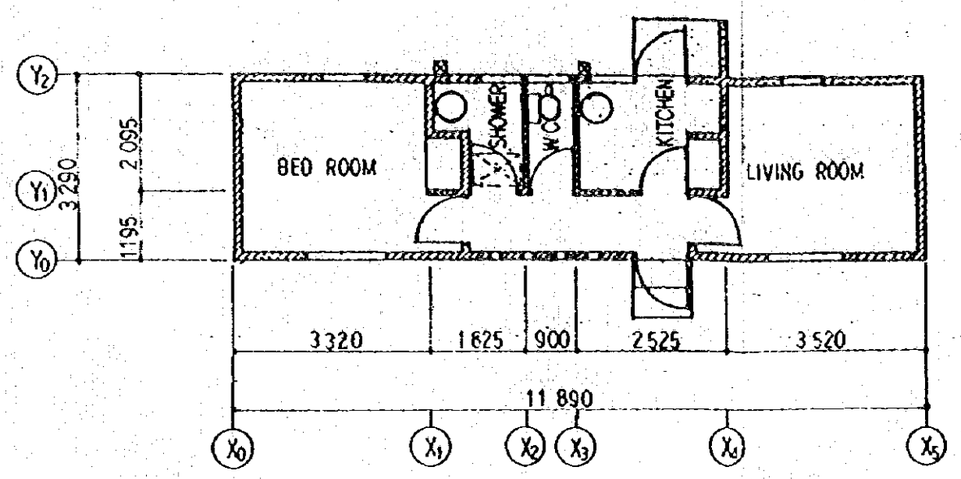

PLAN

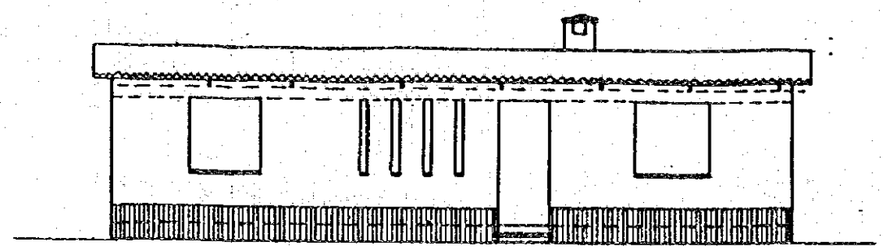

FRONT ELEVATION

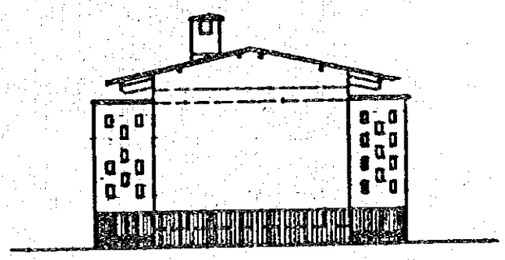

SIDE ELEVATION

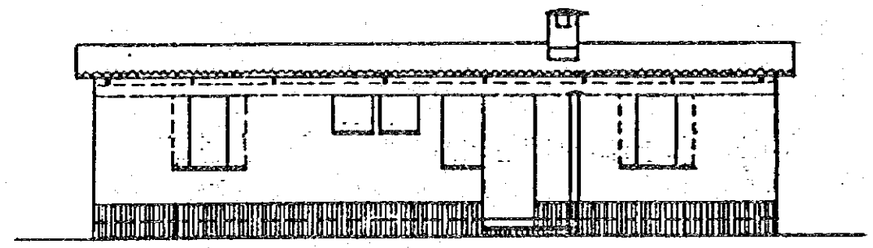

REAR ELEVATION

REPUBLIC OF KENYA MINISTRY OF WATER DEVELOPMENT	
TAVETA-LUMI WATER SUPPLY PROJECT	
STAFF HOUSE (1)	
DATE OCT '87	SCALE 1/100 DWG No - 39
JAPAN INTERNATIONAL COOPERATION AGENCY (JICA)	

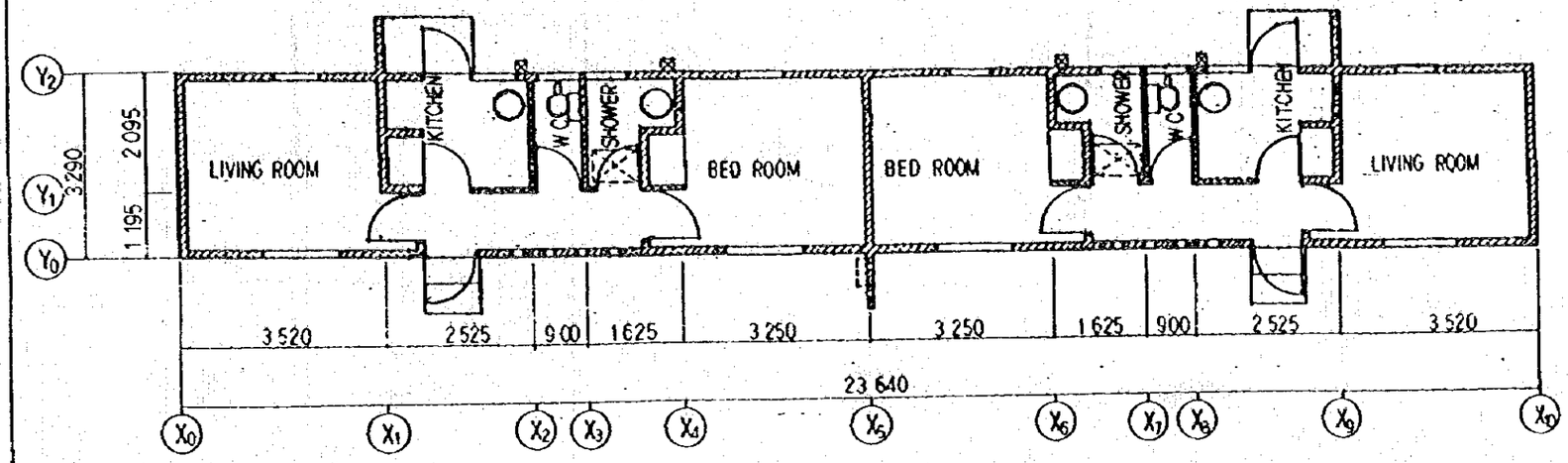

PLAN

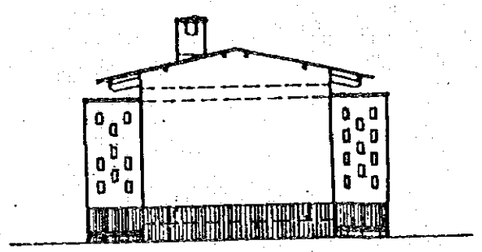

SIDE ELEVATION

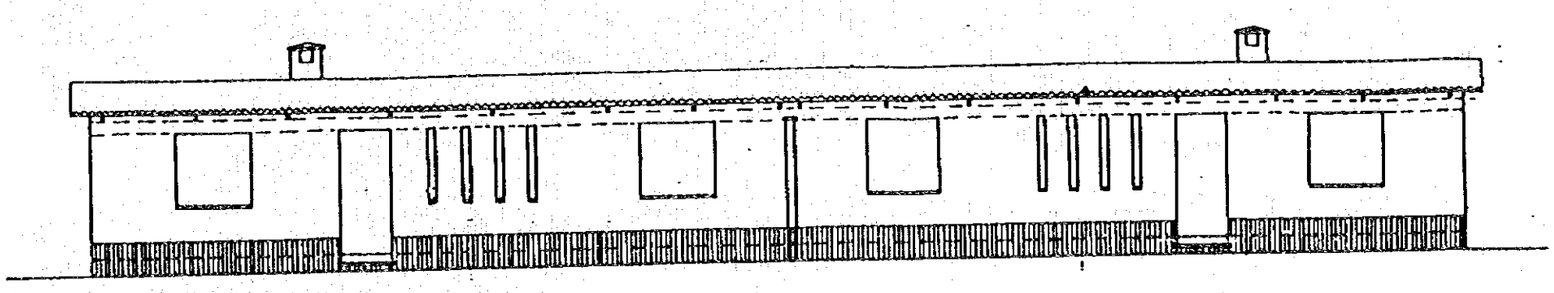

FRONT ELEVATION

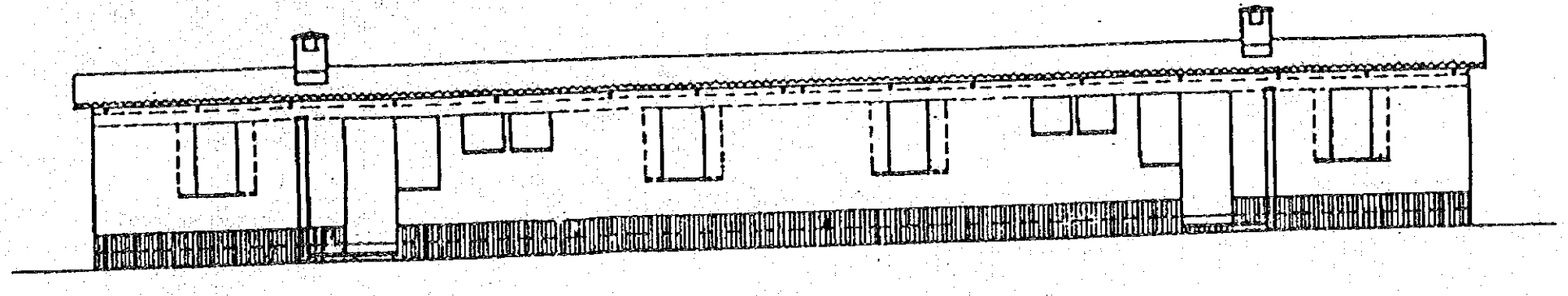

REAR ELEVATION

REPUBLIC OF KENYA
MINISTRY OF WATER DEVELOPMENT
TAVETA-LUMI WATER SUPPLY PROJECT

STAFF HOUSE (2)

DATE OCT '87 | 1/100 | DWG-No-4.0

JAPAN INTERNATIONAL COOPERATION AGENCY (JICA)

KIOSK(2TAPS)

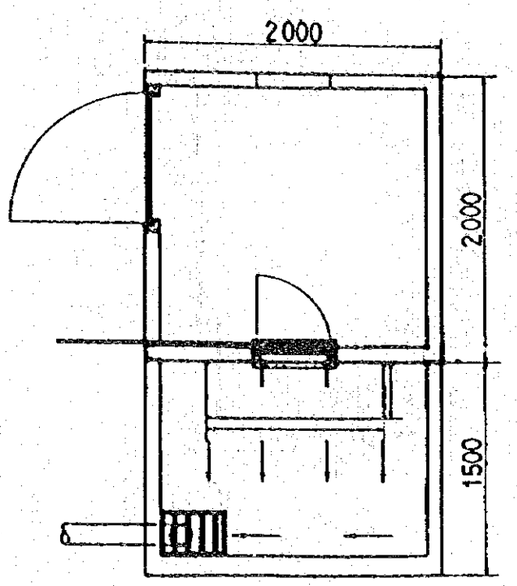

PLAN

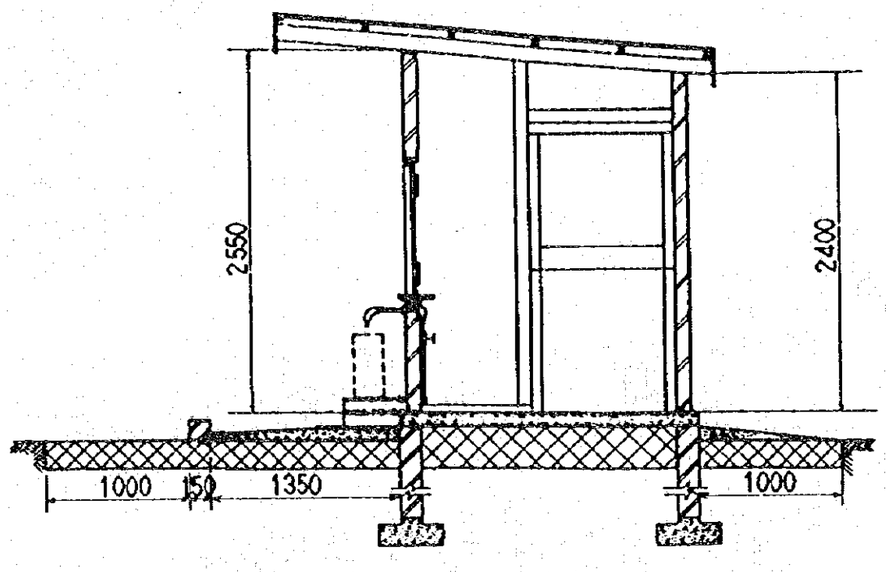

SECTION

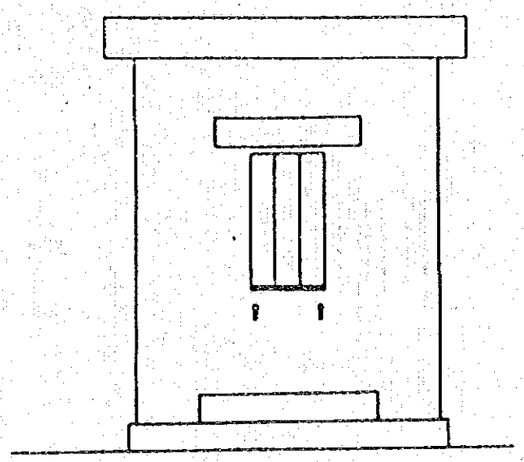

ELEVATION(NO.1)

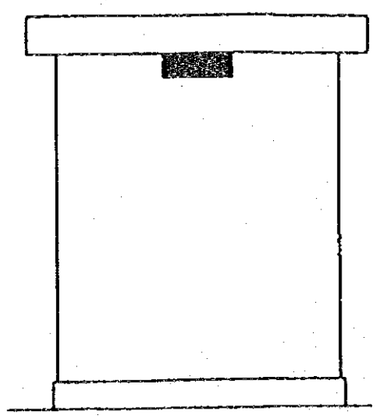

ELEVATION(NO.2)

REPUBLIC OF KENYA MINISTRY OF WATER DEVELOPMENT		
TAVETA-LUMI WATER SUPPLY PROJECT		
KIOSK (2TAPS)		
DATE OCT '87	SCALE	DWG-No-Q 1
JAPAN INTERNATIONAL COOPERATION AGENCY (JICA)		

KIOSK(4TAPS)

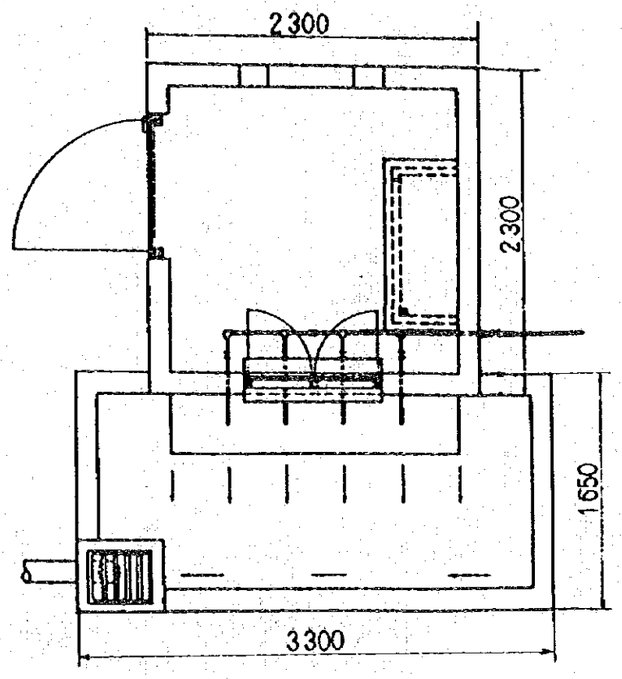

PLAN

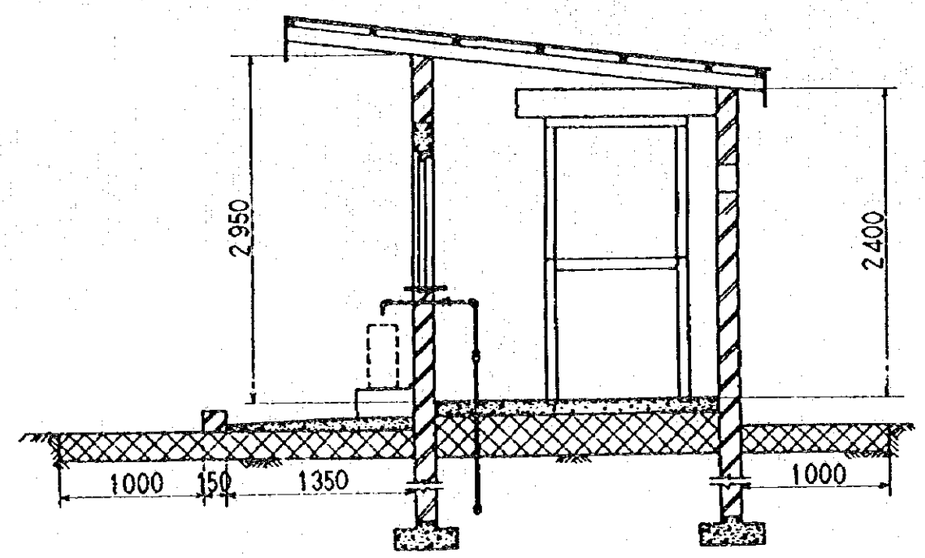

SECTION

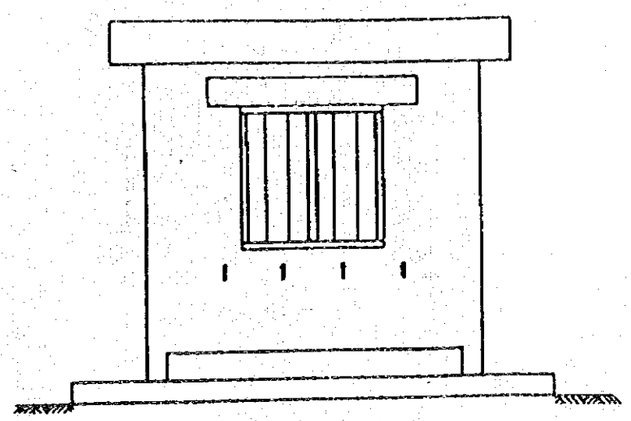

ELEVATION

CRUSHED STONE

CONCRETE

REPUBLIC OF KENYA MINISTRY OF WATER DEVELOPMENT	
TAVETA-LUMI WATER SUPPLY PROJECT	
KIOSK (4TAPS)	
DATE OCT '87	SCALE	DWG-No-42
JAPAN INTERNATIONAL COOPERATION AGENCY (JICA)	

STATION FOR SERVICE RESERVOIR

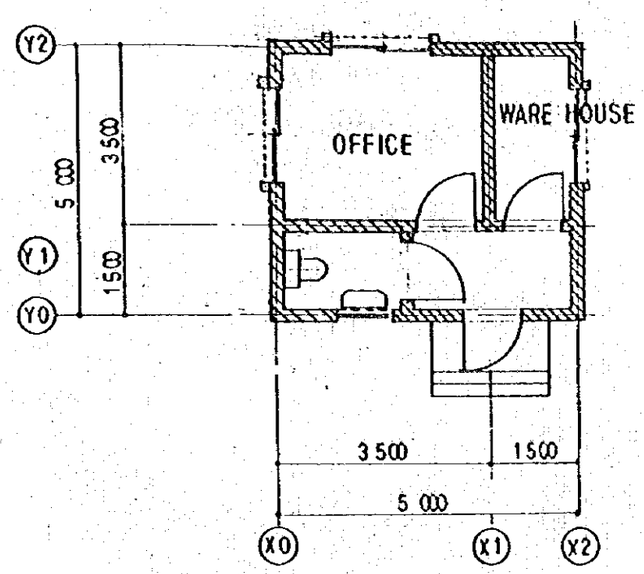

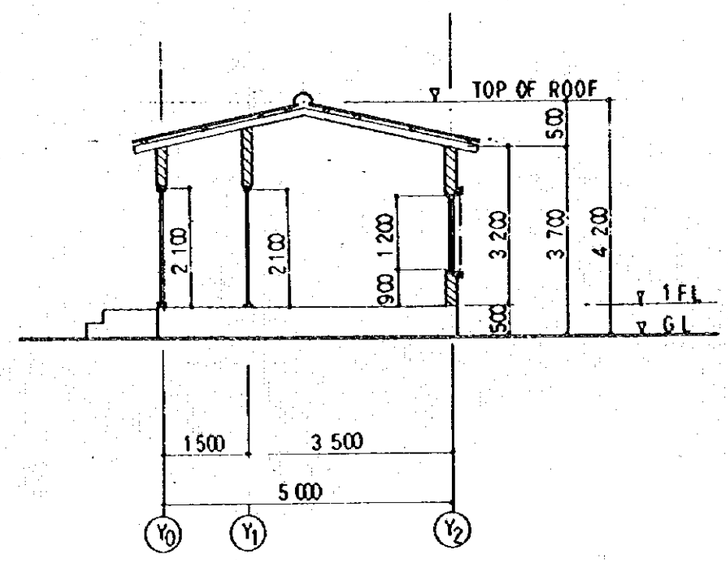

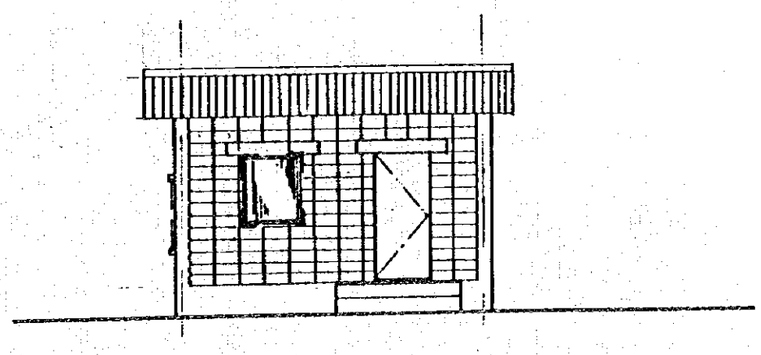

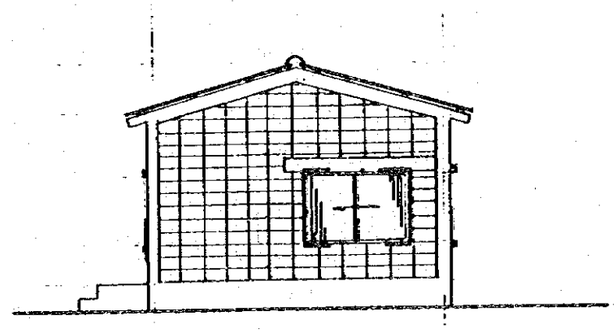

:BLOCK

REPUBLIC OF KENYA MINISTRY OF WATER DEVELOPMENT		
TAVETA-LUMI WATER SUPPLY PROJECT		
STATION FOR SERVICE RESERVOIR		
DATE OCT '87	SCALE 1/100	DWG-No-43
JAPAN INTERNATIONAL COOPERATION AGENCY (JICA)		

FLOW DIAGRAM

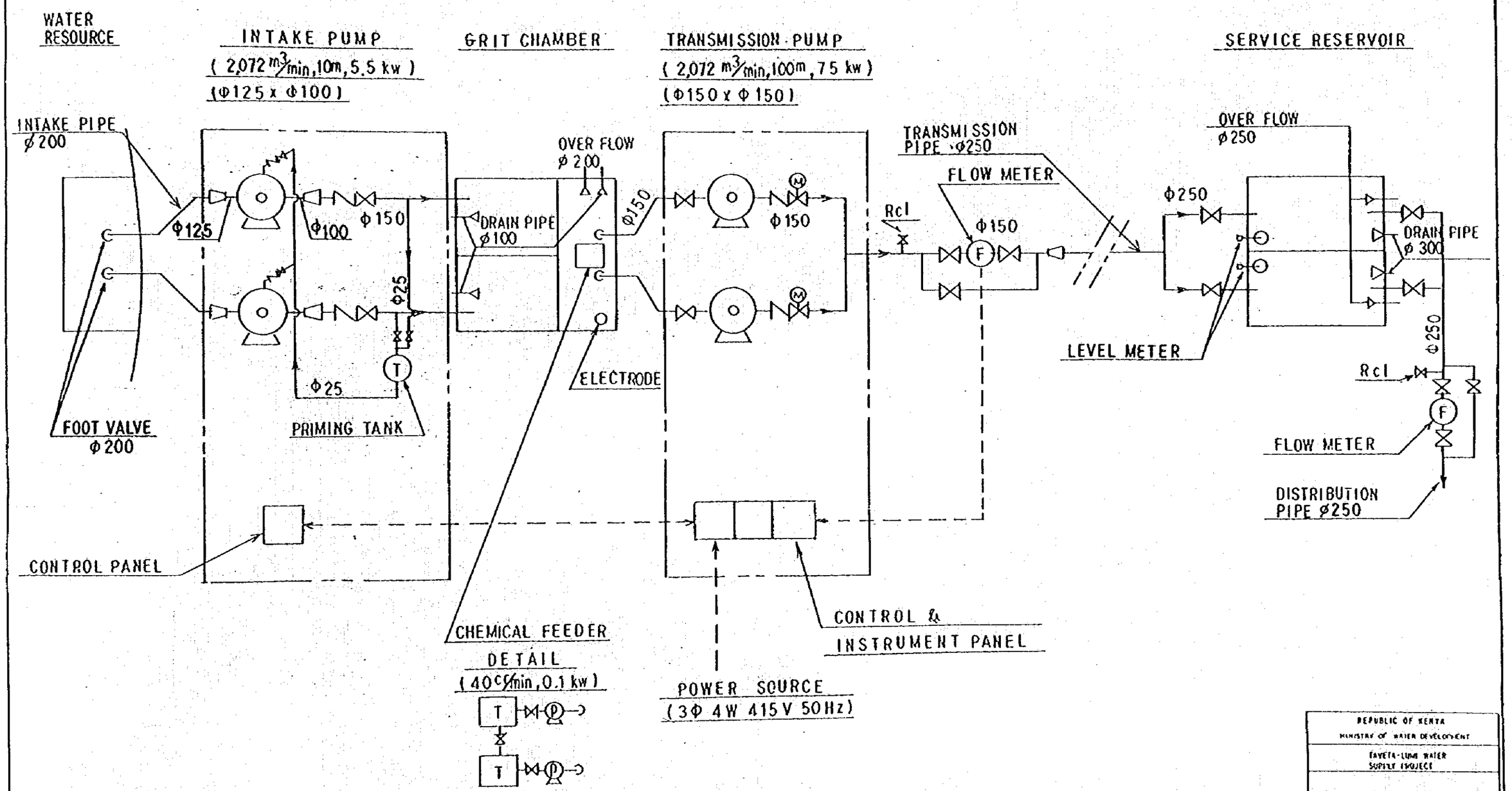

REPUBLIC OF KENYA
MINISTRY OF WATER DEVELOPMENT
TAVETA-LUMI WATER SUPPLY PROJECT
FLOW DIAGRAM
DATE OCT '87 | SCALE | DWG-No-44
JAPAN INTERNATIONAL COOPERATION AGENCY (JICA)

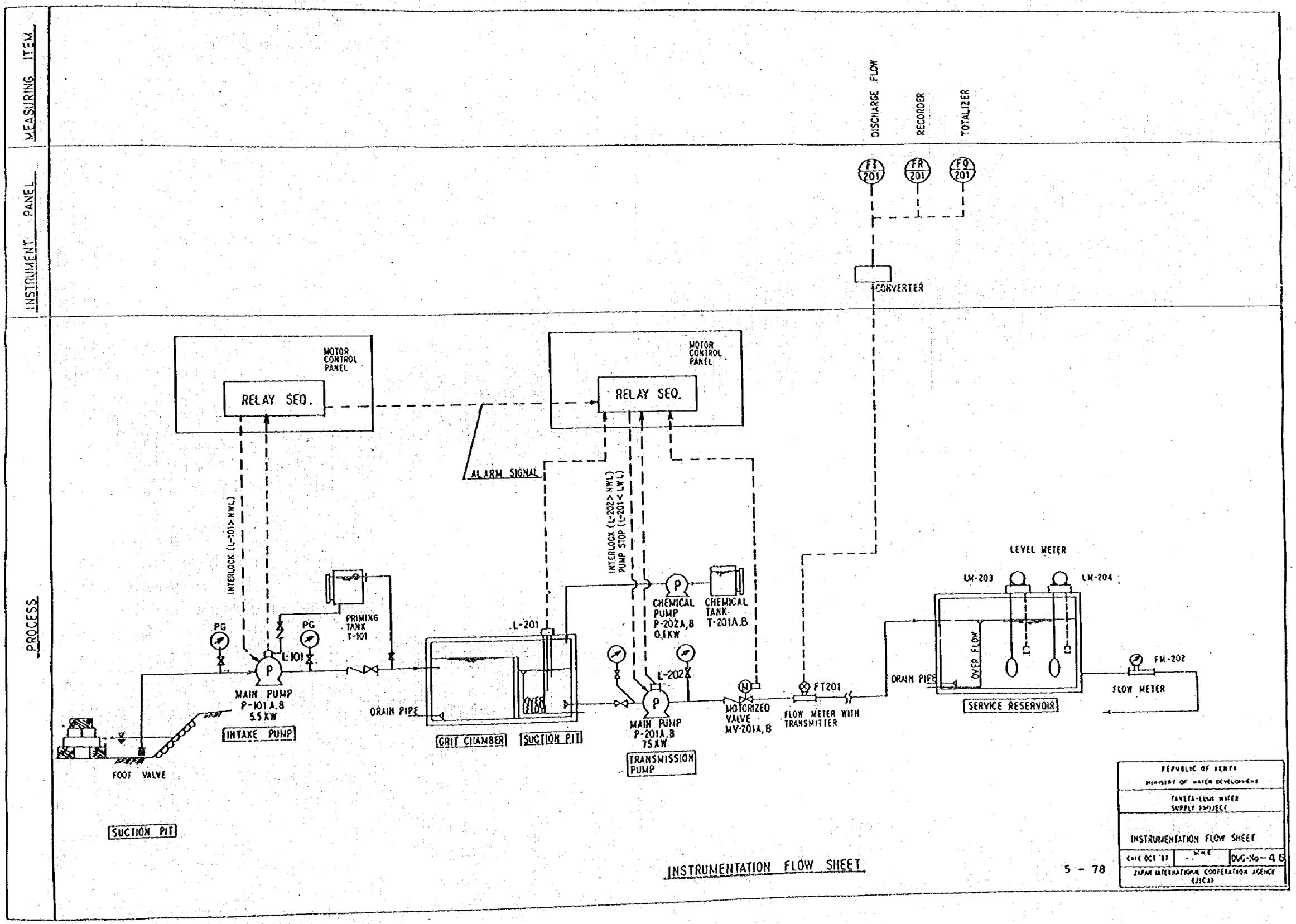

INSTRUMENTATION FLOW SHEET

MEASURING AND CONTROL LIST

MEASURING ITEM	Q'TY	LOCAL	CONTROL CENTER			CONTROL	INTERLOCK	
		I*	I*	R*	T*		S*	
INTAKE PUMP								
1. SUCTION PRESSURE	2	O						
2. DISCHARGE PRESSURE	2	O						
3. PRIMING DETECTOR	2						O	
4. PRIMING TANK WATER LEVEL	1	O						
TRANSMISSION PUMP								
1. SUCTION PRESSURE	2	O						
2. DISCHARGE PRESSURE	2	O						
3. PRIMING DETECTOR	2						O	
4. CHEMICAL TANK LIQUID LEVEL	2	O						
5. SUCTION PIT WATER LEVEL	1					O PUMP STOP at LVL		
6. RESERVOIR WATER LEVEL	2	O						
7. FLOW RATE IN TRANSMISSION PIPE	1		O	O	O			
8. FLOW RATE IN WATER SUPPLY PIPE	1	(I&T) O						
9. RESIDUAL CHLORINE IN TRANSMISSION PIPE	1	(MANUAL CHECK)						
10. RESIDUAL CHLORINE IN WATER SUPPLY PIPE	1	(MANUAL CHECK)						

* NOTE: I : INDICATOR
R : RECORDER
T : TOTALIZER
S : STARTING CONDITIONS

REPUBLIC OF KENYA
MINISTRY OF WATER DEVELOPMENT
TAVETA-LUMI WATER SUPPLY PROJECT
MEASURING AND CONTROL LIST
DATE OCT '87 | SCALE | DWG-No - 46
JAPAN INTERNATIONAL COOPERATION AGENCY (JICA)

EQUIPMENT LIST

INTAKE PUMP

EQUIPMENT		Q'TY
1. MAIN PUMP		2
DIA. φ125×φ100 2.072 m³/min 10m		
·MOTOR		2
STANDARD 5.5kw 415V 50Hz		
·PRIMING DETECTOR		2
·FOOT VALVE	φ200	2
·CHECK VALVE	φ150	2
·GATE VALVE	φ150	2
2. PRIMING TANK	400ℓ	1
3. WATER LEVEL DETECTOR		
·FOR PRIMING DETECTOR		2
4. CONTROL PANEL		1
5. GEARED TROLLEY		
CHAIN BLOCK	0.5ton	1

TRANSMISSION PUMP

EQUIPMENT		Q'TY
1. MAIN PUMP		2
DIA. φ150×φ150 2.072 m³/min 100m		
·MOTOR		2
STANDARD 75kw 415V 50Hz		
·FLY-WHEEL		2
·PRIMING DETECTOR		2
·SUCTION VALVE	φ150	2
·CHECK VALVE	φ150	2
·MOTORIZED VALVE	φ150 0.2kw	2
2. CHEMICAL FEEDER		2
40cc/min 0.1kw		
·CHEMICAL TANK	500ℓ	2
3. FLOW METER	φ150	1
4. WATER LEVEL DETECTOR		
·FOR SUCTION PIT		1
·FOR PRIMING DETECTOR		2
5. CONTROL PANEL		2
·INSTRUMENT PANEL		1
6. GEARED TROLLEY		
CHAIN BLOCK	3ton	1

SERVICE RESERVOIR

EQUIPMENT		Q'TY
1. LEVEL METER		2
2. FLOW METER	φ250	1

REPUBLIC OF KENYA
MINISTRY OF WATER DEVELOPMENT
TAVETA-LUMI WATER SUPPLY PROJECT
EQUIPMENT LIST
DATE OCT '87 | SCALE | DWG-No-47
JAPAN INTERNATIONAL COOPERATION AGENCY (JICA)

CHAPTER 6 PROJECT IMPLEMENTATION PLAN

CHAPTER 6 PROJECT IMPLEMENTATION PLAN

6-1 Implementation Procedure

6-1-1 Responsibility of Project Implementation

MOWD is the agency responsible for the Project in the Republic of Kenya. The Study Team's counterpart in Kenya for the Project's Basic Design Study is the MOWD's Planning and Design Branch. The implementation of the Project will be taken care by the MOWD's Implementation Branch, and Operation and Maintenance Branch.

6-1-2 Detailed Design and Construction Supervision

1. Detailed Design:
   Preparation of the detailed design and tender documents are to be made based on the results of the Basic Design Study. The prepared detailed design and tender documents are to be approved by the MOWD of the Republic of Kenya.

2. Tendering and Contracting:
   A consultant will assist MOWD with the Project tendering. The consultant will assist MOWD to make tender notice, prequalification of contractors, and issue tender documents to the prequalified contractors. After a certain period, the consultant will also assist MOWD to evaluate the tender documents for selection of the contractor. The consultant will assist the client to prevent any delay in signing the contract between MOWD and a Japanese contractor.

3. Construction Supervision:
After the contract agreement, the consultant will assist MOWD by confirming necessary contract documents and by inspecting materials and equipment procured by the contractor in order to ensure smooth project implementation.

2) Construction Supervision in Kenya

The consultant will attend the construction arrangement meeting and provide MOWD and the contractor with advice. The consultant will witness the transporting of materials and equipment in Kenya, and will direct and supervise the contractor who is constructing the facilities, installing and adjusting equipment, and conducting equipment testing operations and completion tests. The consultant will also monitor the construction work schedule, the quality, and cost control in order to complete the construction work within period specified in the Exchange of Notes.

6-1-3 Construction Method

For the construction of water supply facilities, MOWD awards the contracts. As the Project construction period is so short that the selection of a contractor should be made carefully.

6-2 Contribution of the Government of Kenya to the Project

Facilities to be provided by the project are summarized in Section 5-4-3 "Summary of the Project Facilities" (P. 5-48). Of these the Government of Kenya will take responsibility for land acquisition for intake and pumping facilities, transmission and distribution

pipeline routes and reservoir. It is also to be taken care to extend power line of KPLC to the intake facility site.

Finally, costs to be incurred by custom duty and clearance will be met by the Government of Kenya.

6-3 Materials and Equipment Procurement Plan

As a result of construction material market research, it was found that sand, gravel, clement, and timber are obtainable at local markets. As the Project Area locates in a volcanic rock zone, good quality sands should be procured around Voi, about 100 km away from the area.

PVC pipes are widely used for water supply branch lines. Pipes having working pressures of 6 kg/cm^2 to 15 kg/cm^2 are available locally. As some of the pipes to be used in Project facilities will have high static hydraulic pressure, pipe joints should be selected and installed with special care.

Steel pipes suitable for water supply use, having 150 to 800 mm diameters and allowable pressures of 15 kg/cm^2. are available locally.

Annual production capacity of the steel pipes is 12,000 to 15,000 tons for water supply use. These figures can be interpreted to represent 375 to 468 kilometers of 300 mm diameter pipe. About 17 km of pipe having diameters of 200 mm and 250 mm will be required for the Project, the necessary pipe can be readily procured in Kenya.

Kenya has adopted the British Standards for interior and exterior coatings for steel pipe.

In Kenya, steel pipes are manufactured at order basis. After accepting an order for pipe, a certain extent of time is required for obtaining the import license for the necessary raw materials, the shipping period, and for the manufacturing the ordered pipe. No problems should be encountered in the factories' capabilities to manufacture pipes for use in the Project. However, timely materials procurement should be scheduled taking into account the process from the time of order placement until the time of manufacture.

In a recent project carried out under grant aid from West Germany, steel pipes made from hot-coil imported from West Germany were used. A similar procedure would be used in the manufacture of the steel pipes to be procured for the Project.

Construction materials and equipment, other than described above, must be imported from foreign countries.

It is possible to obtain some types of construction equipment on a lease basis. However, special attention should be made to the equipments' maintenance condition, and to the time and terms involved.

6-4 Project Implementation Schedule

The Project implementation is scheduled to be completed within 17 months after the signing of the Exchange of Notes: 6 months for preparing the detailed design and tender documents; 11 months for procuring and transporting materials and equipment, and for constructing Project facilities.

Judging from road conditions in the area, the construction schedule was prepared so that construction work can be performed during dry seasons (see Fig.-48). and 49).

Fig-48 IMPLEMENTATION SCHEDULE

	1	2	3	4	5	6	7	8	9	10	11	12	13	14	15	16	17	18
E / N	▽																	
Selection of Consultants		▽																
Detail Design																		
Public Notice and P/Q																		
Tendering and Evaluation																		
Selection of Contractor						▽												
Procurement							Purchase			Transport		Manufacture						
Consulting Works																		
Intake and Pump Facility																		
Transmission Main																		
Reservoir																		
Distribution Main & Line																		
Distribution Lines																		
Kiosks																		
Buildings																		

6-5 Operation and Maintenance

6-5-1 Operation and Maintenance System

The existing water supply facilities in Taveta Town are operated and maintained by personnel of the MOWD's Coastal Province Branch Office located in Taveta Town. Presently, there are 18 employees working in this office: an office manager, two engineers, and 15 technicians.

After the Project implementation, the branch office will have to undertake new tasks: operation and maintenance of the pumping station distribution reservoir, and the distribution system. Also, the number of kiosks installed in the area will increase from 7 to 48. In order to take care of this additional works, there would be a requirement for retraining office staff members.

With the increased numbers of kiosks in the rural areas, the office staff would need to be increased to carry out the periodical kiosk inspection and maintenance work.

PVC pipe was adopted for use in certain sections of the Project's water supply pipelines in order to reduce water cost. Although PVC pipe can resist comperatively high inside and outside pressures, it is relatively weak, in comparison with steel pipe, in withstanding impact forces from the outside. Therefore, it is important that an ledger book be prepared, immediately after the piping installation work is complete, to keep records of pipe depths and their locations for safeguarding the pipeline.

Judging from the quality of the Kenya Water Institute's education system, and the present facilities' operation and maintenance condition, it is considered that the Project facilities will be properly operated and maintained.

6-5-2 Operation and Maintenance Costs

The Project facilities' operation and maintenance costs is estimated to be Ksh 1.71 mil consisting of salaries and wages, electricity rates, operation and maintenance costs for structures (1% of the construction cost), operation and maintenance cost for equipment (5% of equipment costs), chemical costs and other costs.

CHAPTER 7 PROJECT EVALUATION

CHAPTER 7
PROJECT EVALUATION

7-1 Effects of the Project

One of the more important development objectives of the Republic of Kenya is to provide the country's people with safe drinking water by the year 2005. However, due to the high population growth rate and the decline in the prices of its agricultural products in international markets, budgetary funds needed for water supply projects are extremely scarce.

Since 1970 (a period covering the First through the Fifth Water Supply Programmes), 347 water supply projects were planned. Of this number, only 163 of the said projects were completed. During the Forth and Fifth RWS periods, delays in project implementation have been considerable.

The Project Area is within a portion of the area covered by the Taita-Taveta District Development Programme which is presently in progress with the cooperation of the Government of Denmark. The Programme is an overall development plan for rural areas. A water supply project in the rural areas is also included in the Programme; its purpose is to develop shallow wells and install hand pumps. Taveta Town is not included in this Programme.

In some of the rural areas to the south of Taveta Town, ground water having a high salinity content was found in the shallow strata. This water is not suitable for drinking. No ground water was found in either the shallow or deep strata in other areas.

The Project, in conjunction with the Taita-Taveta District Development Programme, aims at providing water supplies to Taveta Town and to the southern rural areas where ground water suitable for domestic water is unobtainable.

The existing water sources in Taveta Town are two boreholes that were drilled in 1963 and 1975 respectively. The daily discharge of 230 m^3 of water serves 2,760 people in the town itself, and to about 7,000 people in the surrounding rural areas.

The existing water distribution pipes, which were installed before Taveta Town's urban development plan was made, have small diameters and insufficient capacities. Further, the pipes suffer from severe deterioration.

In the rural areas to the south of Taveta Town, people continue to obtain water from nearby irrigation channels or from remote springs. This situation is gradually improving as more shallow wells are being dug and more hand pumps are being installed under the Taita-Taveta District Development Programme. In areas where good quality ground water is unobtainable, however, people have to continue to draw water from irrigation channels and remote springs, even for the foreseeable future.

The 1986 statistics of Taveta Hospitals show that malaria was the disease most often treated. There are many other water borne diseases in the area, they include skin diseases, diarrhrea, and bilharzia. Bilharzia is well known as a disease caused by drinking the irrigation water in the area. (see Table-22).

Table-22 Number of Patients Treated at the Taveta Hospital

	1985	1986
Malaria	22,992	15,144
Upper respiratory infection	10,952	7,632
Outpatients	7,232	3,607
Skin Disease	3,102	2,741
Accidents	2,832	1,755
Diarrhea	1,749	1,712
Bilharzia	2,000	1,190
Accute eye infection	-	797
Ear infection	-	720

The Project, by supplying water to Taveta Town and the rural area to the south of Taveta Town will contribute not only to achieving the objective of the water supply programme, but also to the improvement of the living environment.

From the standpoint of public health, the implementation of the Project, along with the power line extension work that was recently completed, will be an extremely worthwhile undertaking.

As an index for measuring the improvement of the living environment attributable to the Project's implementation, water supply quantities before and after the implementation are tabulated as follows:

	Present Condition	Condition After Project Implementation
Taveta Town:		
Water source:	Wells	Spring
Design Capacity	83 m^3/day 30 l/cap/day	967 m^3/day House Connection: 150 l/cap/day Kiosk: 20 l/cap/day
Population served	2,760	5,591
Rural Areas:		
Water source:	Wells in Taveta Town	Spring
Design Capacity	145 m^3/day 20 l/cap/day	1,746 m^3/day House Connection: 50 l/cap/day Kiosk: 15 l/cap/day
Population served	7,240	33,635
Total:		
Design Capacity	228 m^3/day	2,713 m^3/day
Population served	10,000	39,226

In order to achieve the goal of the Water Supply Programme, MOWD set the policy for furnishing project costs (construction costs plus operation and maintenance costs) from charges assessed to water supply beneficiaries in large and medium sized cities, and in areas where good water sources are easily available. However, in underdeveloped areas and in areas where project costs tend to be higher because of the difficulty in obtaining water sources, the Government provides the costs for construction, and the beneficiaries fund the operation and maintenance costs so that annual operation and maintenance costs will be fully covered by water supply tariffs.

7-2 Feasibility of the Project

7-2-1 Feasibility from a Technical View Point

As suitable spring water is to be used for the Project's water source, only chlorination will be required to treat the water. Hypochlorite, which is commonly used in Kenya, will be used for the chlorination process.

The Project's water supply system involves pumping water from a water source to distribution reserviors, and then effecting distribution by gravity flow. This type of water supply system is widely used in Kenya and does not require any advanced technology. From a technical view point, it is a very appropriate method.

7-2-2 Feasibility from an Economic View Point

Per MOWD's policy, the Government covers the costs of construction, while beneficiaries pay the operation and maintenance costs.

Taveta Town's existing water rates are as follows:

Supply Method	Water Rates
House connection	Ksh 2.0/m^3
Kiosk	Ksh 0.05/20 litres

The above rates have not been able to cover operation and maintenance costs. Therefore, in 1985, MOWD undertook a study for preparing a new water supply rate system.

Water rates presently proposed are as follows:

Supply Method	Water Rates
House connection	
Without meter:	Ksh 30/month
With meter:	Ksh 3.0/m^3
Kiosk	Ksh 2.5/m^3
	Ksh 0.15/20 litres

The Project's design water demand and water rates are as follows (also, see Table-23 for more details):

Classification	Water Demand (M^3/day)	Water Rates (Ksh/m^3)	Total Revenue (Ksh/day)
Public Use	674.36	3.0	2,023
House Connection	1,437.53	3.0	4,313
Kiosk	338.58	2.5	846
Livestock Use	262.40	-	-
TOTAL	2,712.87		7,182

Annual revenue from water rates are:

Ksh 7,182 x 365 = Ksh 2,621,430/year

Thus, the operation and maintenance costs of Project facilities (Ksh 1.7 1 mil) will be fully covered by revenue received.

7-2-3 Feasibility from a Management Viewpoint

The MOWD has been educating and reeducating staff members for handling the operation and maintenance of water supply facilities. This education and training is conducted at the Kenya Water Institute (KWI).

The effects of the MOWD's education system can be clearly seen in the management of Taveta Town's existing water supply facilities. It is considered that the operation and maintenance of the Project facilities will be performed in a satisfactory manner by staff members of MOWD in Taveta Town after they receive certain technical training related to said Project facilities. There should be no operation or maintenance problems as long as water tariffs continue to be collected.

Table 23 Design Capacity by Service Area and Demand

Unit: m^3/day

	Public Use	House Connection	Kiosk	Cattle	Total
Taveta Town	273.68	670.95	22.36	-	966.99
Taveta South	23.00	80.30	35.14	-	139.44
Reata	12.28	32.70	14.72	-	59.70
Kitovo	14.15	37.70	16.97	-	68.82
Sela Mbaha	39.85	85.45	38.46	3.40	167.16
Kamleza	16.98	22.60	27.15	2.75	69.48
Kimoligo	11.23	12.60	5.66	40.40	69.89
El Doro	30.55	61.28	16.36	12.50	120.69
Kithogoto I	9.43	25.10	11.31	12.50	58.34
Kithogoto II	4.73	12.60	5.66	12.50	35.49
Maranu	59.45	188.55	50.26	25.00	298.26
Timbila	66.73	25.10	11.31		128.14
Maho	9.43	25.10	11.31	45.00	90.84
Masengoni	6.80	17.60	7.92	2.90	35.22
Kionsoni	3.30	8.80	3.96	2.60	18.66
Kimala	63.03	61.55	27.71	35.00	187.29
Mbogani	8.90	14.05	6.33	24.45	53.73
Miereni	1.98	5.30	2.37	25.55	35.20
Nghonji	9.43	15.10	11.31	3.10	48.94
Mata	9.43	25.10	11.31	14.75	60.59
Total	674.36	1,437.53	338.58	262.40	2,712.87

CHAPTER 8 CONCLUSION AND RECOMMENDATIONS

CHAPTER 8
CONCLUSION AND RECOMMENDATIONS

8-1 Conclusion

The Project's total expected water tariffs (Ksh 2.62 million/year) will be more than sufficient to cover operation and maintenance costs (Ksh 1.71 million/year).

Judging from the development principles set by the Government of Kenya, and the anticipated effects of the Project, it will be well worthwhile for this Project to be implemented under grant aid cooperation from the Government of Japan.

8-2 Recommendations

1. The Project's water source is extremely important; it has the potential for being put to various uses. The presently assumed leakage of the spring into the Lumi River must be stopped as soon as possible.

2. The Project's water source yields a relatively stable discharge. It will be necessary to establish an accurate discharge measuring system, and to provide for the protection of the water source.

3. Taveta Town's urban development plan was reexamined, but it is assumed that it has not, as yet, been finalized.

   The Project will install water supply pipes only to main areas in Taveta Town. However, the Project is planned to provide 80% of Taveta Town's future population with sufficient amounts of water by means of house connections in accordance with MOWD's design standards. Thus, it is necessary to decide upon the details of the urban development plan at an

early stage in order to allow future installation of house connections.

4. The Project is designed to provide 40% of the people in the rural areas with a sufficient quantity of water through the use of house connections. To carry out a rational water supply plan -- one that provides for the delivery of water through house connections -- in those areas in the future, it would be desirable to make a residential zoning plan.

5. By increasing the domestic water supply, people's daily lives will be improved. However, as the water supply increases the amount of waste water also increases proportionately. For this reason, Taveta Town's urban development plan should be drawn up taking into account waste water treatment.

A P P E N D I X

1 Minutes of Discussion
   1) Minutes of Discussion for The Basic Design Study
   2) Minutes of Discussion for The Draft Final Report

2 Member List of The Study Teams
   1) The Basic Design Study Team
   2) The Draft Final Report Mission

3 Study Itenerary
   1) Itinerary of The Basic Design Study
   2) Itinerary of The Draft Final Report Mission

4 Persons Assisted The Study

5 Calcuration for Design Capacity

1 Minutes of Discussion

1) Minutes of Discussion of The Basic Design Study

MINUTES OF DISCUSSIONS

ON

THE TAVETA-LUMI WATER SUPPLY PROJECT

IN

TAVETA DIVISION, COAST PROVINCE

IN

THE REPUBLIC OF KENYA

In response to the request of the Government of the Republic of Kenya, the Government of Japan decided to conduct a basic design study on the Taveta-Lumi Water Supply System and entrusted the study to the Japan International Cooperation Agency (JICA). JICA sent to Kenya the study team headed by Mr. Norio Nishihata (Team Leader) from September 8 to September 18, 1987.

The team had series of discussions on the Project with the officials concerned of the Government of the Republic of Kenya headed by Mr. Z.J. Kamencu, PS/MWD, and conducted a field survey in Taveta area.

As a result of the study, both parties agreed to recommend to their respective Governments that the major points of understanding reached between them, attached herewith, should be examined towards the realization of the Project.

Mr. Norio Nishihata
Team Leader
Japanese Study Team
JICA

Mr. Z.J. Kamencu
Permanent Secretary
Ministry of Water
Development

18th September, 1987

In witness of the above:

Mr. A. Takahashi
Resident Representative
JICA, Kenya Office

1. The objective of the Project is to supply water and to ensure the proper and effective functioning of a water supply system for the inhabitants in the area of Taveta town and Taveta South by accomodating modern and appropriate facilities.

2. The site of the Project is located on the eastern slopes of Mount Kilimanjaro (site map is attached as Annex I).

3. Contents of the Project as named "The Taveta-Lumi Water Supply Project" required by the Government of The Republic of Kenya, are as follows:

(1) Water Source:	Njoro Kubwa Spring
(2) Flow System:	Spring water is to be lifted up to the reservoir and distributed to service areas by gravity flow
(3) Design Capacity:	2600 m3/day as an average daily demand for approximately 40 Thousand inhabitants by the year 2005
(4) Service Areas:	Taveta town/urban area and Taveta South/rural areas where no alternative water source is available

(5) Major facilities:

(a) Construction of new intakes, having in mind Kenya Government's policy regarding standardization programme

(b) Construction of trunk mains

(c) Construction of new reservoirs with chlorination facilities

(d) Construction of new water supply mains and service lines, preferably using steel pipes with mechanical joints

(e) Provision of public taps (kiosks)

(f) Construction of operators quarters.

Remarks I:

The Contractor who will be proposed to carrry out the construction of the Project must have had sufficient experience on similar water supply projects including the transfer of technology to local counterparts.

Remarks II:

JICA will study and analyse the effects and eligibility of the above Project.

4. Executing Agency:

Ministry of Water Development is responsible for the technical and administration of the Project.

5. Undertakings of the Government of Japan:

The Japanese Study Team will convey to the Government of Japan the intention of the Republic of Kenya that the former takes necessary measures to cooperate by providing the reservoirs and other items listed in Annex II within the scope of Japanese economic cooperation programme under the grant.

6. Understanding of Japan's Grant Aid System:

The Kenyan side has understood Japan's Grant Aid System explained by the Team including the appointment of a Japanese Consultant Firm and Japanese General Contractor for the construction, as requested under Remarks I.

7. Undertakings to be considered by the Government of the Republic of Kenya:

The Government of the Republic of Kenya will consider taking the necessary measures listed in Annex III as proposed by the JICA Team on condition that the Grant Aid would be extended to the Project.

TAVETA-LUMI WATER SUPPLY

Annex 1

SUPPLY AREA

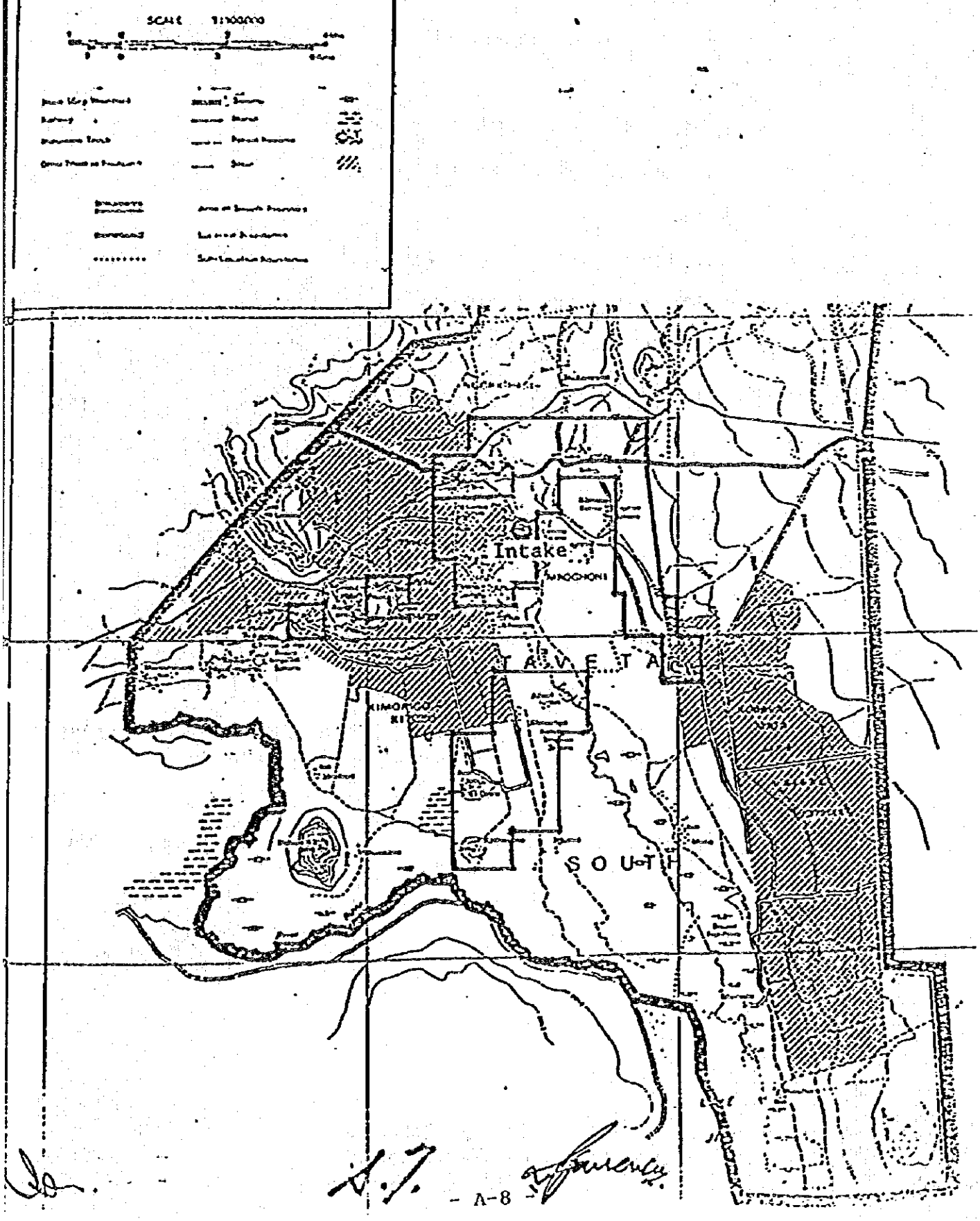

ANNEX II

BASIC DESIGN FINDINGS PROPOSED TO BE INCLUDED AS THE PROJECT COMPONENTS

1. Construction of new intakes having in mind Kenya Government's policy regarding pump standardization programme.
2. Construction of trunk mains.
3. Construction of new reservoirs with cholorination facilities.
4. Construction of new water supply mains and service lines preferably using steel pipes with mechanical joints.
5. Provision of public taps (kiosks).
6. Construction of operators quarters.

* The design capacity will be approximately 2600 m3/day to cover the projected population of 40 Thousand by the year 2005.

** The above mentioned items are subject to changes due to further study and analysis.

ANNEX III

UNDERTAKINGS TO BE CONSIDERED BY THE GOVERNMENT OF THE REPUBLIC OF KENYA AS PROPOSED BY THE JICA TEAM

1. To secure land for reservoir and other water supply facilities.

2. To clear, level and reclaim site prior to commencement of the construction.

3. To undertake incidental out-door works such as roads, fencing, gates and exterior lighting.

4. To pave the road with gravel, boulders, asphalt and/or concrete pavement for access to the site from the main road for both construction and maintenance/operation.

5. To provide facilities for distribution of electricity, drainage and other incidental facilities to the site;
   1) Electricity distributing line
   2) Water supply facilities

6. To bear the following commissions to the Japanese foreign exchange bank for the banking services based upon the Banking Arrangement.
   1) Advising commission of Authorization to Pay
   2) Payment of commission

7. To ensure prompt unloading, tax exemption, customs clearance for the products purchased under the Grant at ports of disembarkation in Kenya. Arrangements for prompt internal transportation, to be paid under the Grant, shall be made for the products.

8. To exempt Japanese nationals from customs duties, income taxes and other fiscal levies which may be imposed in Kenya with respect to the supply of the products and services under the verified contracts.

   These exemptions shall be subject to the existing rules and regulations which are applicable to similar Grant Aid Programmes.

9. To accord Japanese nationals whose services may be required in connection with the supply of the products and the services under the verified contract, such facilities as may be necessary for their entry into Kenya and stay therein for the performance of their work.

10. To maintain and use properly and effectively the facilities constructed and equipment purchased under the Grant.

11. To bear all the expenses other than those to be borne by the Grant, necessary for the construction of the facilities as well as for the transportation and the installation of the equipment.

2) Minutes of Discussion for The Draft Final Report

MINUTES OF DISCUSSION ON
THE DRAFT FINAL REPORT OF THE BASIC DESIGN STUDY OF
TAVETA-LUMI WATER SUPPLY PROJECT IN
TAITA-TAVETA DISTRICT, COAST PROVINCE,
REPUBLIC OF KENYA

In response to the request of the Government of the Republic of Kenya, the Government of Japan conducted a basic design study on the project for the Taveta-Lumi Water Supply Project and entrusted the study to the Japan International Cooperation Agency (JICA). JICA sent to Kenya the study team headed by Mr. Norio Nishihata, Deputy Head, First Basic Design Study Division, Grant Aid Planning and Survey Department, JICA, from 9th September, to 11th October, 1987.

As a result of the study, JICA prepared a draft report and dispatched a team headed by Mr. Masao Tsujioka, Deputy Head, First Basic Design Study Division, Grant Aid Planning and Survey Department, JICA, to explain and discuss it from 23rd November, to 30th November.

Both parties had a series of discussions on the Report and have agreed to recommend to their respective Governments that the major points of understanding reached between them, attached herewith, should be examined towards the realization of the Project.

Mr. Masao Tsujioka
Team Leader
Draft Report Mission of
The Basic Design Study

Eng. H.K. Rotich
Director of Water
Development

ATTACHMENT

1. The Kenya side principally agreed to the basic design proposed in the Draft Final Report, with minor amendments to be incorporated in the Final Design Report, as per attached.

2. The Final Reports (10 copies in English) on the Project will be submitted to the Government of the Republic of Kenya by the middle of January, 1988.

3. The Kenya side understood the system of Japan's Grant Aid Programme and confirmed the Annex III in the minutes of Discussions signed on 18th September, 1987.

A T T A C H M E N T

1. Building Structure:
   - Roof of the Pump Houses should be of G.I. Sheets with a slope.
   - Pump Houses are to be RC/Masonry Block.
   - Staff Houses are to be Masonry Block.
2. Population growth rate in Taveta Town is 4% until the year 2005.
3. PVC pipes are to be selected according to the required working pressure.
4. Distribution pipes shall be designed based on the peak factor: 2.
5. Valves at the Pump Houses shall be installed horizontally.
6. Vacuum pumps are to be replaced by by-pass for priming purpose.
7. Valve chambers have to have lockable covers.
8. Air valve at river crossing shall be installed on the bank within a valve chamber.
9. Kiosks and Operators' Houses are to be as per standard drawings of MoWD to be provided by MoWD.
10. Control system shall be manual type with wireless or telephone instead of automatic type.

2 Member Lists of The Study Team

1) Member List of The Basic Design Study Team

Name	Assignment	Organization
Norio Nishihata	Team Leader	Japan International Cooperation Agency (JICA)
Kenji Nakanosono	Water Supply Engineer	Bureau of Water Supply Yokohama City Council
Takashi Imazu	Structural Engineer	Pacific Consultants International (PCI)
Hiroshi Mori	Water Supply Engineer	Pacific Consultants International (PCI)
Hideharu Masuda	Piping Engineer	Pacific Consultants International (PCI)
Akihiko Togo	Material Engineer	Pacific Consultants International (PCI)

2) Member List of The Draft Final Report Mission

Name	Assignment	Organization
Masao Tsujioka	Team Leader	Japan International Cooperation Agency (JICA)
Takashi Imazu	Structural Engineerr	Pacific Consultants International (PCI)
Hiroshi Mori	Water Supply Engineer	Pacific Consultants International (PCI)
Akihiko Togo	Material Engineer	Pacific Consultants International (PCI)

3 Study Itenerary

1) Itinerary of The Basic Design Study

SURVEY ITINERARY

DATE	DAY	NOTE	ACTIVITIES
Sept. 6, '87	Sun.	NRT to Frankfort	
Sept. 7, '87	Mon.		Arrival in Frankfort
Sept. 8, '87	Tue.	Frankfort to Nairobi	Arrival in Nairobi, Republic of Kenya.
Sept. 9, '87	Wed.		Courtesy calls on Japanese Embassy, JICA & MORD.
Sept. 10, '87	Thu.		Site visit, Observation of existing water supply facilities and Meetings with Branch Office of MOWD & VOI.
Sept. 11, '87	Fri,		Meetings with Divisional Commision Taveta & DANIDA Taveta Office and site investigation.
Sept. 12, '87	sat,		Data collection in MOWD Taveta office and site investigation.
Sept. 13, '87	Sun.		Data collection in MOWD Taveta Office & Kenya Power LIghting, and site investigation.
Sept. 14, '87	Mon.		Expranation of Project outline to District Office Wundanyi and. Taita - Taveta District Development Programme - DANID.
Sept. 15, '87	Tue.		Report the progress to JICA(Nairobi) and Meeting with DANIDA Nairobi.
Sept. 16, '87	Wed.		Confirmation of Minutes of discussion with MOWD(Nairobi) and Arrangement of data collected
Sept. 17, '87	Thu,		Arringement of data collected, study of framework of the project, etc.
Sept. 18, '87	Fri,		Signing of Minutes of Discussion, Messrs NIshihata(Team Leader) and Nakanosono leave for NRT.
Sept. 19, '87	Sat.		Study of framework of the project and data collection.
Sept. 20, '87	Sun,		Study of framework of the project and data collection.
Sept. 21,''87	Mon.		Preparation of basic plan, and reeting with MOWD(Nairobi)
Sept. 22, '87	Tue,		Expranation of progress of study and study schdule to MOWD(Nairobi) and JICA(Nairobi).
Sept. 23, '87	Wed.		Exptanation of land acquisition status by MOWD(Nairobi), and data collection.
Sept. 24, '87	Thu.		Data collection in District Office Wundanyi.
Sept. 25, '87	Fri.		Data collection in DANIDA Taveta Divisional Commission Taveta and MOWD Taveta.
Sept. 26, '87	Sat.		Site investigation.
Sept. 27, '87	Sun.		Site investigation.

Sept. 28, '87 Mon.		Data collection in District Office Wundanyi & MOWD Taveta, and site investigation.
Sept. 29, '87 Tue.		Data collection in Divisional Commission Taveta DANIDA Taveta & Taveta Hospital.
Sept. 30, '87 Wed.		Site investigation, and Meeting with KPLC.
Oct. 1, '87 Thu.		Data collection in District Office Wundani.
Oct. 2, '87 Fri.		Explanation of interim progress report to JICA (Nairobi) & MOWD(Nairobi).
Oct. 3, '87 Stt.		Data collection in MOWD(Nairobi), and Analysis of data callected.
Oct. 4, '87 Sun.		Data collection, Analysis of data collected and Preparation of basic plan.
Oct. 5, '87 Mon.		Data collection, Analysis of data collected and Preparation of basic plan.
Oct. 6, '87 Tue.		Data collection AAnalysis of data collected and Preparation of basic plan.
Oct. 7, '87 Wed.		Data collection in MOWD(Nairobi), and National Institute of Soil Materials.
Oct. 8, '87 Thu.		Data collection in MOWD(Nairobi), and COUR Courtesy calls on Japanese Embassy and JICA in Nairobi.
Oct. 9, '87 Fri.	Nairobi to London	Arrival in London
Oct. 10, '87 Sat.	London to	Depart for Narita.
Oct. 11, '87 Sun.	NRT	Arrival in Narita.

2) Itinerary of The Draft Final Report Mission

Itinerary of The Draft Final Report Mission

Nov. 21	(Sat.)	Departure from Narita
Nov. 23	(Mon.)	Arrival at Nairobi Courtesy call to MOWD, Embassy of Japan and JICA, Nairobi Office
Nov. 24	(Tus.)	Discussion on The Draft Final Report
Nov. 25	(Wed.)	"
Nov. 26	(Thu.)	"
Nov. 27	(Fri.)	Report to Embassy of Japan and JICA, Nairobi Office
Nov. 28	(Sat.)	Supplementary Field Survey at Taveta
Nov. 29	(Sun.)	"
Nov. 30	(Mon.)	Departure from Nairobi
Dec. 2	(Wed.)	Arrival at Narita

4 Persons Assisted The Study

The study team would like to take this opportunity to extend its deepest gratitude to all those who assisted and cooperated in the execution of this study.
We would also like to make special mention of the valuable support and guidance given by the following individuals to whom are truly indebted:

Person Who Assisted This Project

Embassy of Japan (Nairobi)	Mr. Nobuyuki Horie (First Secretary)
JICA Nairobi Office	Mr. A. Takahashi (Resident Representative)
" "	Mr. Yoshinori Ebata
	Mr. Norio Shimomura
MINISTRY OF WATER DEVELOPMENT (MOWD)	Mr. C. J. KAMEMCU
" "	Mr. H. K. A. ROTICH (Director)
" "	Mr. S. NCHOGU (head of planning & design engineer)
" "	Mr. THUKU (head of planning & design engineer)
" "	Mr. NGUNYANGI (planning & design engineer)
" "	Mr. OKALI (administration)
" "	Mr. L. OMOLD (water aportionment board assistant hydrologist)
MOWD VOI OFFICE	Mr. MURIITHE (district water office)
" TAVETA OFFICE	Mr. MZIRAI (divisional water office)
" MONBASA	Mr. J. M. KABAYA (coast province office head of planning and design coast province water branch)
MOWD JICA Expert	Mr. T. TOYODA
" "	Mr. K. MIYAUCHI
TAVETA (D.C.) DISTRICT COMMISSION ..	Mr. WILFTED LOSHAMTER (chief of chala location)
WUNDANYI (D.O.) DISTRICT OFFICE	Mr. JOHNL. M. JUMA (deputy district commissioner)
WUNDANYI (DDO)	Mr. S. K. KILUTA (district development officer)
DANIDA TAVETA	Mr. ANDERS LILJA (hydrogist, TAITA/TAVETA development programme)
DANIDA WUNDNYI ..... TAITA/TAVETA district development Programme nopnd-DANIDA	Mr. NIHS. KJOLSENH (DANID team leader)
DANIDA NAIROBI	Mr. JANSSEN
KPLC (KENYAN POWER LIGHTING)	Mr. MUTHCER MBILA
TAVETA HOSPITAL	Record office head