4-4-3 Implementation Plan

Installation works shall be smoothly conducted, assigning suitable experts in charge of transmitter, power supply and antenna (domestic services only), based on the agreement with the client (RB) for consulting services concerning the following items:

(1) Implementation Design

- Agreement for Consulting Services (after conclusion of the Exchange of Notes)
- Detailed Design
- Completion of Tender Documents (including Technical Specification)
- Tender Notice
- Tender
- Tendering Evaluation
- Witness for Contract Agreement

(2) Installation Works Management

- Approval of Manufacturing and Installation Works
- Witness to Construction Works borne by Bangladesh Side
- Witness to Factory Inspection
- Installation Works Management

4-4-4 Procurement Plan for Equipment

All equipment shall be procured from Japan. Procurement from the countries other than Japan or Bangladesh shall not be adopted this time, because there is no exemplar of such grant aid project in the broadcasting field. Geographical condition of the recipient country was also taken into consideration.

4-5 Implementation Schedule

Time duration of the installation works is 12 months after conclusion of the Exchange of Notes, not separating the phases.

Required time for the installation works on the site is 2.5 months as it is inevitable to utilize a limited break time, about 3 hours at day time of transmission, even if a break at night time might be available for the works, for the purpose of no interference of co-channel of a new transmitter in its installation, adjustment and inspection, and re-connextion of the trunk lines of power supply and the programme transmission link from the studio, and reinforcement and painting for the existing antenna.

Table 9 shows a time schedule of the works.

Table 9 Implementation Schedule

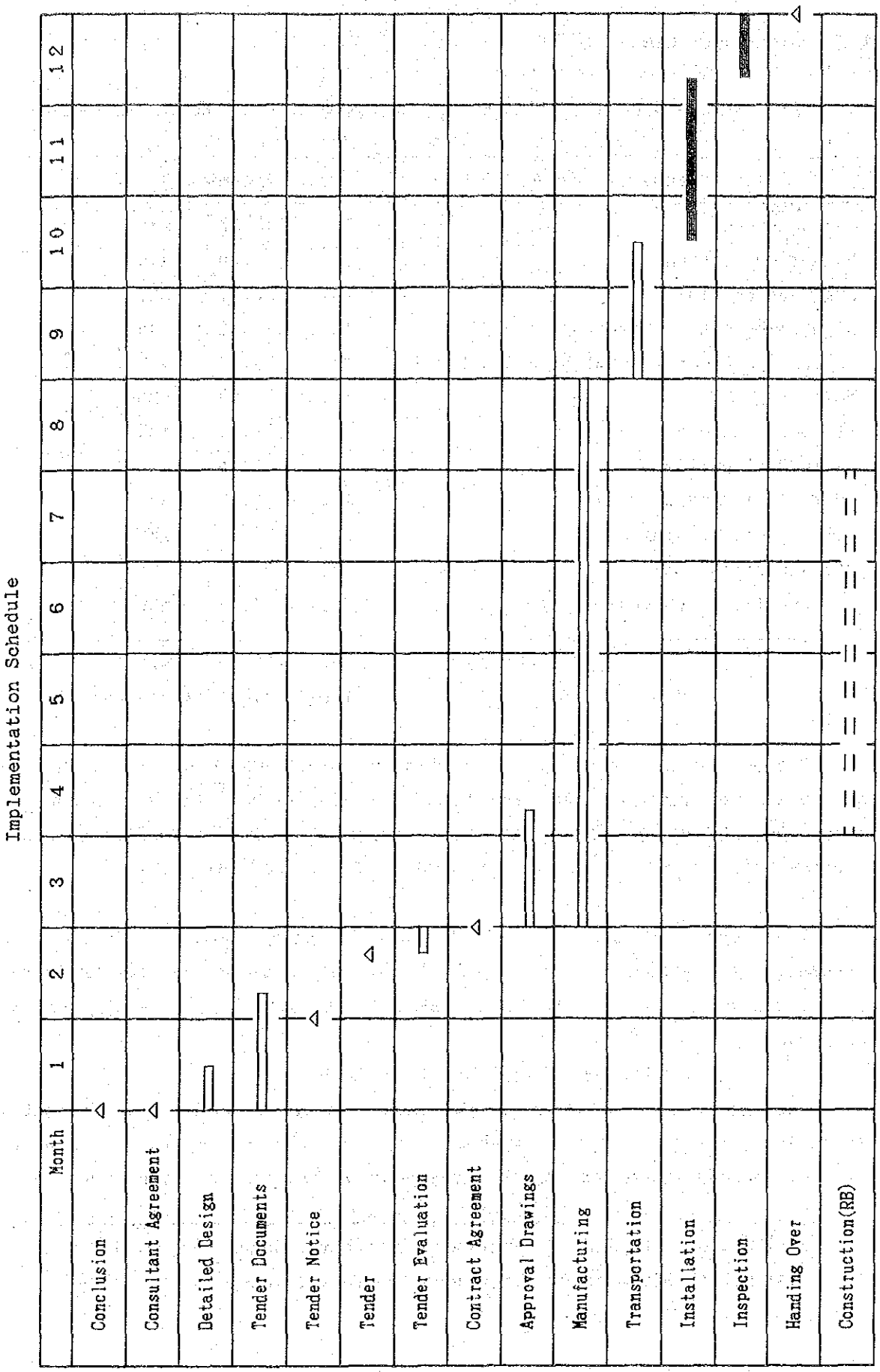

4-6 Maintenance Cost

RB's revenue expenditure in the fiscal year 1986 - 1987 is as follows:

Items	Amount		
Headquarters	Tk.	510.28	lakh
Reception Station	Tk.	8.06	lakh
Engineering Wing	Tk.	26.40	lakh
High Power Transmitting Station(3)	Tk.	211.25	lakh
Super High Power Transmitting Station(1)	Tk.	89.81	lakh
News Wing	Tk.	78.54	lakh
Regional Radio Station	Tk.	372.49	lakh
Radio Publication Wing	Tk.	13.48	lakh
Commercial Service Wing	Tk.	33.60	lakh
Farm broadcast Wing	Tk.	16.49	lakh
Transcription Wing	Tk.	33.32	lakh
International broadcast Wing	Tk.	29.12	lakh
Total	Tk.	1,422.84	lakh
	(about 774 million yen)		

The maintenance cost (purchasing spare parts etc.) summed up in the budget of Headquarters has totalled Tk. 429.90 lakh. It corresponds to about 200 million yen, 30% of the total budget including a foreign currency portion 50%. Thus, the maintenance cost is deemed sufficient.

The annual cost of electric power consumption for High Power Transmitting Station, Chittagong, is to be estimated as follows, provided that a consumption fee is 1.84 Taka/kWH[13], load capacity 400kW and monthly broadcasting hours 434:

$$1.84 \times 400 \times 434 \times 12 = \text{Tk. } 38.33 \text{ lakh}$$

The annual cost of fuel for the same Station is to be also estimated as follows, provided that a light oil cost is 6.06 Taka/litre[14], quantity of fuel consumption of an engine generator 69 litres/hour, the duration of

13) STATISTICAL BULLETIN of Bangladesh (monthly), June, '86, p. 149

14) STATISTICAL BULLETIN of Bangladesh (monthly), June, '86, p. 140

a power failure of city electricity 50 minutes in total per month (10 min. x 5 times) and the duration of the generator on standby 50 minutes in total per month (10 min. x 5 times):

$$6.06 \times 69 \times (50 + 50) \div 60 \times 12 = \text{Tk. } 0.08 \text{ lakh}$$

The total amount of both annual costs mentioned above is Tk. 38.41 lakh, corresponding to 55% of Tk. 70.41 lakh one third of the budget of 3 High Power Transmitting stations of RB.

4-7 Estimated Project Cost

The total project cost borne by Bangladesh is estimated at about Tk. 387.21 lakh (about 210 million Japanese yen).

Its breakdown is as follows:

Items	Amount
a) Pre-construction	Tk. 2.00 lakh
b) Construction works	Tk. 62.23 lakh
c) Machinery & Equipment	Tk. 261.64 lakh
d) Transport Vehicles	Tk. 4.00 lakh
e) Man Power	Tk. 7.56 lakh
f) Other Costs	Tk. 17.30 lakh
g) Cost escalation	Tk. 32.48 lakh
Total	Tk. 387.21 lakh

CHAPTER 5 PROJECT EVALUATION

CHAPTER 5 PROJECT EVALUATION

(1) Justification and Concrete Effectiveness

The executing and responsible agency for this project is Radio Bangladesh (RB). Established forty-seven years ago, RB has an experience of accepting a Japan's grant aid (National Broadcasting House, Dhaka, from 1981 to 1983), operates it skillfully and also has wide experience of constructing, operating and maintaining the three High Power Transmitting Stations. RB also has a long term plan on staff assignment and training.

With relation to programme production, gathering and editing of weather informations have been performed in close collaboration with Bangladesh Meteorological Department that Radio Bangladesh had exchanged a memorandum with, while various programmes catering to audience have been broadcasted. As a result, the rating of a popular programme has risen up to 40% in population.

The Project Proforma presented by Radio Bangladesh gives a minute and thorough description of the Project. The urgency and necessity of this Project are fully recognized as a result of the survey of the background and examination of the contents requested.

It is therefore considered that this Project has ample justification.

Immediated effect of this Project is the expansion of the coverage.

Chittagong Division is composed of 15 zillahs including Chittagong, Comilla and Sylhet and situated as splitting from north to south the eastern part of Bangladesh. Sylhet district in the north and Comilla district in the middle are covered by a 20 kW transmitter and 10 kW one respectively. In addition, the relevant parts of these two districts are also covered by Super High Power Transmitting Station (100 kW) and High Power Transmitting Station (100 kW), Dhaka. Through replacement of the existing 10 kW transmitter with the new high power 100 kW one, the coverage of Chittagong Station will be extended, on an average of the difference of propagation during day and night time through dry and rainy season, by about 3.8 times in population and 2.7 times in land.

(2) Management Plan

After the execution of this project, Kalurghat Transmitting Station of Chittagong Radio Station, is line with 100 kW High Power Transmitting Station, Noapara, Khulna Station, will be raised to a higher status as an "independent station" placed under the supervision of a Resident Engineer in the organization of Radio Bangladesh. Number of technical staff is 19. These members will be assigned in three shifts for daily operation and general shift for maintenance at day time. The new station will have sufficient man power including experienced engineers and technicians organically transferred from three transmitting stations, 1000 kW Super High Power Transmitting Station, Dhamrai, Dhaka (inaugurated in 1974), 100 kW High Power Transmitting Station, Savar, Dhaka (inaugurated in 1963) and 100 kW High Power Transmitting Station, Noapara, Khulna (inaugurated in 1970). Overseas training for the staffers will contribute to the upgrading of the staff.

There is a maintenance schedule table of Kalurghat Transmitting Station, Chittagong, sufficient to recognize an aspect of the management plan by Radio Bangladesh (refer to Annexe 6, No.5). It shows rationalism and thoroughness.

One set of 100 kW (50 kW x 3) transmitter of Noapara Transmitting Station, Khulna, replaced and power-upped by a Japanese manufacturer on a commercial basis in 1979, is the same type as the transmitter proposed in this Project. Though transmitters of two Transmitting Stations, Dhaka are old ones, members on duty at these stations have an experience of not only operation and maintenance but also construction. The essence of radio engineering being universal, they have adequate skills as candidates for the staff of the newly raised Chittagong Station.

The maintenance cost (purchasing spare parts etc.) bearing maintenance management of Radio Bangladesh has been summed up as follows:

Fiscal year	Maintenance cost	Total budget
1981	Tk. 300 lakh	
1984	Tk. 450 lakh	
1986	Tk. 429.90 lakh	Tk. 1,422.84 lakh

The amount in 1986 corresponds to about 200 million Japanese yen, including a foreign currency portion 50%. Thus, the maintenance cost is favourably sufficient.

In this context, the management plan of Radio Bangladesh is evaluated to be appropriate in each aspect of man power, finance and facilities.

CHAPTER 6 CONCLUSION AND RECOMMENDATION

CHAPTER 6 CONCLUSION AND RECOMMENDATION

(1) Conclusion

1) Executing and Responsible Agency is Radio Bangladesh, NBA.

2) Radio Bangladesh has a 47 year history and implemented, under Japan's grant aid, the construction project of National Broadcasting House at Dhaka from 1981 to 1983 and is now operating it successfully.

3) Radio Bangladesh has a rich experience of construction, operation and maintenance 3 big high power transmitting stations, and also has formulated a long term plan for staff assignment and training.

4) With regard to programmes, Radio Bangladesh precisely and steadily broadcasts various programmes including extraordinary weather informations, especially cyclone forecasts, referring to audience's opinions. A rating of a popular programme has risen up to 40% in population.

5) Concerning programme production, gathering and editing of weather informations have been performed in close collaboration with Bangladesh Meteorological Department that Radio Bangladesh had exchanged a memorandum with.

6) As a result of the survey and investigation, it has been made clear that the Project Proforma offered by Radio Bangladesh has minuteness and thoroughness.

7) The urgency and necessity of this Project are sufficiently recognized as a result of the survey of the background and examination of the contents requested.

8) After realization of this Project, in addition to the expansion of the coverage of Chittagong Radio Station, the broadcasting of various programmes closely connected with the localities, especially weather informations including cyclone causing serious disaster every year, will give plenty of benefit to the population of the relevant region.

(2) Recommendation

1) Operational Administration

After the execution of this Project, Kalurghat Transmitting Station of Chittagong Radio Station will be raised to a higher status as an "independent station" placed under the supervision of a Resident Engineer in the organization of Radio Bangladesh. It is desirable that staff assignment and budget allocation suitable for a high power transmitting station should be considered for Kalurghat Transmitting Station.

2) Staff assignment

It is desirable that Radio Bangladesh, utilizing a rich experience of construction, operation and maintenance of Super High Power Transmitting Station, Dhaka, High Power Transmitting Station, Dhaka and High Power Transmitting Station, Khulna, should carry out an adequate staff assignment plan by transferring experienced persons to Chittagong Transmitting Station from three high power stations mentioned above and despatching the staffers to overseas training on a regular basis.

3) Budget allocation

For FY 1986, Tk. 429.90 lakh (including a fcurrency portion 50%) is allocated for the maintenance of proadcasting equipment. Due consideration should be given to the smooth execution of the budget allocation.

4) Undertakings borne by Bangladesh side

The works concerning architecture borne by Bangladesh side shall be completed before commencement of installation of equipment granted by Japanese side.

5) Utilization of T&T Transmission Lines

Radio Bangladesh at present uses a broadcast wave relay system in order to compose the nationwide networks for programme transmission. There is some problem in maintaining quality of programme transmission. Telegraph & Telephone Board now operates the nation-

wide microwave networks of transmission lines (each line 1800 ch of telephones plus standby) which cover all places where regional stations of Radio Bangladesh are located. In order to maintain good quality broadcasting, it is desirable that Radio Bangladesh should constitutes the nationwide networks by utilizing T&T's microwave transmission lines. The bandwidth 10 kHz, necessary for radio programme transmission, will occupy only 3 channels. For this purpose, it is sufficient to add a modulator and demodulator (wide-band 10 kHz, provided by T&T) and a link (for tail connection, provided by RB) between the respective T&T terminal and RB's regional station.

ANNEXE

1. MINUTES OF DISCUSSIONS

MINUTES OF DISCUSSIONS

OF

THE REPLACEMENT PROJECT OF MEDIUM-WAVE TRANSMITTER

IN

THE PEOPLE'S REPUBLIC OF BANGLADESH

In response to the request made by the Government of the People's Republic of Bangladesh for the Replacement Project of Medium - Wave Transmitter (hereinafter referred to as "the Project "), the Government of Japan decided to conduct a Basic Design Study and the Japan International Cooperation Agency (hereinafter referred to as "JICA") has sent to Bangladesh a team headed by Mr. Kiyoshi Sato, Deputy Director of Engineering Division, Broadcast Administration Bureau, Ministry of Posts and Telecommunications, from 2nd October to 22nd October, 1986.

The Team has carried out a field survey, held a series of discussions and exchanged views with the concerned authorities of the Government of the People's Republic of Bangladesh.

As a result of the study and discussions, both the parties have agreed to recommend to their respective Governments to examine the results of the study attached herewith towards realizations of the Project.

Dhaka, 8th November, 1986

Mr. Masahisa Ezaki
Resident Representative
Japan International Cooperation
Agency in Bangladesh.

Mr. Saiful Bari
Chairman
National Broadcasting
Authority, Bangladesh.

ATTACHMENTS

1. The title of the Grant Aid Project is the "Replacement Project of Medium-Wave Transmitter".

2. The objective of the Project is to replace a medium-wave transmitter of Chittagong Radio Station, thus it will be enhanced for the purpose of promoting public services in and around Chittagong Division, especially during inclement weather.

3. The Japanese Study Team has understood the necessity and urgency for the implementation of the Project for the People's Republic of Bangladesh.

4. When the 100 KW transmitter is installed at Chittagong Radio Station, its status will be raised and placed under the supervision of a Resident Engineer.

5. Radio Bangladesh shall be responsible for the operation and maintenance of the equipment provided under the Japanese Grant Aid.

6. Although the Japanese Study Team has got relevant data during the survey regarding the capability of the existing antenna which was constructed more than ten years ago, it is required to make further study in Japan, if any re-inforcement is needed.

7. The Japanese Study Team will convey to the Government of Japan the desire of the Government of the People's Republic of Bangladesh that the former take necessary measures to cooperate in implementing the Project and provide necessary equipment as listed in Annex-1 within the scope of Japanese economic cooperation in the form of the Grant Aid.

8. The Government of the People's Republic of Bangladesh has understood that the Japanese Grant Aid system, as explained by the Team, includes in principle the use of a Japanese consulting firm and a Japanese supplier for implementation of the project.

9. The Government of the People's Republic of Bangladesh will take necessary measures as listed in Annex-2 on condition that the Grant Aid from the Government of Japan is extended to the Project.

10. The final report of the Basic Design Study on the Project in English will be submitted to the Government of the People's Republic of Bangladesh by the beginning of February, 1987.

ANNEX - 1

Items of the equipment for the Project required by the Government of the People's Republic of Bangladesh whose cost will be borne by the Government of Japan.

Equipment list

1.	100 (50 X 2) KW MW Transmitter including:	1 set
	- 50 KW X 2 Combining Equipment	1 set
	- Working Tubes for final PA & MA	1 set
	- Transmitter Control Console	1 set
	- Programme Input Equipment comprising of	1 set
	- AM Modulation Monitor	1 set
	- Oscilloscope	1 set
	- Audio Test Equipment	1 set
	- Monitor Amplifier	1 set
	- Limiting Amplifier	1 set
	- Monitor Selector Panel	1 set
	- Audio Jack Panel	1 set
	- Cabinet Rack Assembly	1 set
	- Dummy Antenna	1 set
	- Accessories	1 set
2.	Automatic Voltage Regulator 3-phase, 4-wire, 350 KVA 50Hz	1 set
3.	Substation Equipment comprising of	
	- 11 KV HT Changeover Switch	1 set
	- LT Distribution Panel	1 set
	- HT/LT Transformer	1 set
	- Accessories	1 set
4.	Ancillary Equipment of the existing Antenna comprising of	1 set
	- Antenna Tuning Unit	1 set
	- Six-wire Feeder Line	1 set
	- Austin Transformer	1 set
	- Obstruction Light Assembly	1 set

5.	Engine Generator, 350KVA 50Hz	1 set
6.	Air-Conditioner for Transmitter Room	2 sets
7.	FM Link	1 set
8.	VHF Communications Equipment	2 sets
9.	Audio Tape Recorder/Reproducer including: - Monitoring Amplifier & Loud-Speaker	1 set 1 set
10.	AM Brodcast Receiver for Programme Relay	2 sets
11.	Measuring Equipment comprising of - Impedance Meter - Frequency Counter - Insulation Resistance Tester - Test Signal Generator 525KHz-110MHz - Circuit Tester	 1 set 1 set 1 set 1 set 5 sets
12.	Installation Tools and Materials	1 set
13.	Spare Parts including: - Tubes for PA & MA	 1 set

Note: On further study, if it is found necessary to re-inforce the existing Antenna, this will be provided.

ANNEX - 2

Following arrangements will be made by the Government of the People's Republic of Bangladesh.

1. To ensure prompt unloadings, custom clearance of the equipment purchased under the Grant (including additional equipment, if any, at ports of disembarkation in Bangladesh. The custom duties and sales taxes of the equipment will be the responsibilities of the Government of the People's Republic of Bangladesh.

2. To exempt Japanese nationals involved in the Project from custom duties, internal taxes and other fiscal levies which may be imposed in Bangladesh with respect to the supply of the equipment and services under the verified contracts.

3. To accord Japanese nationals whose services may be required in connection with the supply of the equipment and the services under the verified contracts such facilities as may be necessary for their entry into Bangladesh and stay therein for the accomplishment of their work.

4. To ensure the satisfactory supply of electricity, which shall be reliable and stable, in advance of commencement of installation works.

5. To arrange the satisfactory accommodation of the new 100KW transmitter in accordance with supplier's drawings and other incidental facilities together with the office building for the staff before commencement of the installation works.

6. To ensure the close communications with the Meteorological Department of Bangladesh for the diffusion of warning signals for hazards during inclement weather.

7. To ensure proper maintenance and effective use of the equipment purchased under the Grant Aid.

ANNEX 2. MEMBER LIST OF THE BASIC DESIGN STUDY TEAM

Mr. Kiyoshi Sato
Team Leader
Deputy Director of Engineering Division,
Broadcast Administration Bureau,
Ministry of Posts and Telecommunications

Mr. Atsushi Fuse
Staff, Second Procurement Division,
Procurement Department,
Japan International Cooperation Agency

Mr. Hideto Yuu
All Japan Radio & Television Engineering Services Co., Ltd.

Mr. Toshinori Miura
All Japan Radio & Television Engineering Services Co., Ltd.

Mr. Tadashi Kyoto
All Japan Radio & Television Engineering Services Co., Ltd.

Mr. Shigeo Hori
All Japan Radio & Television Engineering Services Co., Ltd.

ANNEXE 3 ITINERARY OF THE SURVEY

Date	Abstract
Thu., 2 Oct.	Tokyo (TG - 741) - Bangkok
Fri., 3 Oct.	Bangkok (TG - 321) - Dhaka. Meeting on Itinerary (JICA, RB at Sonargaon) Team Meeting (at Sonargaon)
Sat., 4 Oct.	Visit to ERD Mr. Md. Nasim, Dy. Secretary Visit to Ministry of Information Mr. A.K.M. Ferdous Chowdhury, Dy. Chief of Planning Visit to RB Mr. Asmat Ali & others - Presentation of Inception Report and Questionnaire Observation of H.P.T. Station, Savar and S.H.P.T. Station, Dhamrai
Sun., 5 Oct.	Visit to Planning Commission Mr. Lockman Hakim, DY. Chief Visit to NBH Mr. S.A. Shakadat, Regional Director & Others - Observation of Studio facilities - Discussion on Programmes Meeting on survey at Chittagong (at NBH)
Mon., 6 Oct.	Dhaka (BG-615) - Chittagong Meeting (RB Dhaka and Chittagong) - Presentation of Inception Report - Survey Itinerary

Date	Abstract
Tue., 7 Oct.	Discussion (RB, PWD) Observation and Survey of Studio and Transmitting Station Team Meeting (at Agrabad)
Wed., 8 Oct.	- Leader, Mr. Fuse and Mr. Miura - Discussion (RB, PDB, PWD, MET, at RB) Survey of Transmitting facilities - Mr. Yuu, Mr. Kyoto and Mr. Hori - Measurement of Antenna (Impedance, Insulation resistance, Base current) Measurement of Dimension of Antenna base Investigation of structural strength of Antenna Meeting (RB, at Agrabad)
Thu., 9 Oct.	Discussion (RB, at Kalurghat) Survey of building, Kalurghat (continued) Further investigation of Anchors Team Meeting (at Agrabad) Meeting (RB, at Agrabad) - Explanation of Minutes
Fri., 10 Oct.	Chittagong (BG-616, except Mr. Kyoto and Mr. Hori) - dhaka Meeting (RB, at Sonargaon) Meeting (JICA, at Sonargaon) Preparation of Minutes Draft
Sat., 11 Oct.	Meeting (RB, at NBH, CE Office) - Presentation of Minutes Draft Meeting (JICA, at JICA Office)

Date	Abstract
Sun., 12 Oct.	Team Meeting - Revision of Minutes Draft Meeting (Dy. Chief, M.I., at Sonargaon) - Adjustment of Minutes Draft
Mon., 13 Oct.	Meeting (Joint Secretary, Dy. Chief, at M.I.) Courtesy Call on Ambassador (Leader, Mr. Fuse and Mr. Miura, at Embassy of Japan) Revision of Minutes
Tue., 14 Oct.	Dhaka - Tokyo (TG-322, Leader and Mr. Fuse) Dhaka - Chittagong (BG-611, Mr. Yuu and Mr. Miura).
Fri., 10 Oct.	Investigation of Documents obtained and Preparation of Field Intensity Measurement (Mr. Kyoto and Mr. Hori)
Sat., 11 Oct.	Remeasurement of Current at Antenna base and Measurement of Uprightness of Antenna and Measurement of Earthing Resistance (Mr. Kyoto and Mr. Hori)
Sun., 12 Oct.	Measurement of Field Intensity (Chittagong city and suburban area) and Investigation of a result of Measurement related to Antenna (Mr. Kyoto and Mr. Hori)
Mon., 13 Oct.	Survey of Studio facilities (Mr. Kyoto and Mr. Hori)

Date	Abstract
Tue., 14 Oct.	Measurement of Field Intensity (Chittagong city and suburban area)
Wed., 15 Oct.	Investigation of Documents obtained Investigation of a result of Measurement of Field Intensity
Thu., 16 Oct.	Measurement of Field Intensity (Chittagong city and suburban area)
Fri., 17 Oct.	Measurement of Field Intensity (on the way to and at Cox's Bazar)
Sat., 18 Oct.	Chittagong (BG-612) - Dhaka. Meeting(RB, at RB) Rearrangement of Minutes Investigation of a result of Measurement of Field Intensity
Sun., 19 Oct.	Meeting (RB, at CE Office and NBH) Meeting (T&T, at T&T)
Mon., 20 Oct.	Preparation of Report to JICA and Embassy of Japan Meeting (RB, at CE Office) Reporting to NBA (at NBA Chairman Office) Reporting to JICA (at JICA Office)
Tue., 21 Oct.	Reporting to Embassy of Japan (at Embassy of Japan) Dhaka (TB-322) - Bangkok
Wed., 22 Oct.	Bangkok (TG-740) - Tokyo.

ANNEXE 4 LIST OF INTERVIEWEES

ERD, Ministry of Finance

Mr. Md. Nasim, Deputy Secretary

Ministry of Information

Mr. M. Ahmed Chowdhury, Joint Secretary

Dr. A.K.M. Ferdous Chowdhury, Deputy Chief of Planning

Mr. A.M. Aminul Haque Siddique, Asstt Chief

Planning Commission

Mr. Lockman Hakim, Deputy Chief

National Broadcasting Authority

Mr. Saiful Bari, Chairman

Radio Bangladesh, Dhaka

Mr. M.N. Mustafa, Deputy Director General

Mr. Asmat Ali, Chief Engineer

Mr. Qazi Motaharul Islam, Addl. Chief Engineer

Mr. Harunur Rashid, Regional Engineer

Mr. Rafiqul Islam Bhujyan, Regional Engineer

Mr. Shamsuzzaman Chowdhury, Senior Engineer

Mr. Monoranjan Das, Regional Engineer

Mr. Syed Reasat Hussain, Senior Engineer

Mr. Salahuddin Ahmed, Deputy Senior Engineer

Mr. Syed Bodrod Doza, Addl. Chief Engineer

Mr. Saif Uddin Mallik, Addl. Chief Engineer
(Super High Power TX Station, Dhamrai)

Mr. Golam Mostafa, Resident Engineer
(High Power TX Station, Savar)

Mr. S.A. Shaker, Senior Engineer
(National Broadcasting House)

Mr. S.A. Shahadat, Regional Director
(Programme, NBH)

Mr. M.A. Jalil, Deputy Regional Director
(- ditto -)

Radio Bangladesh, Chittagong

Mr. A.T.M. Mafizul Huq, Regional Director

Mr. Moslem Khan, Regional Engineer

Mr. Shamsul Huda Chowdhury, Deputy Regional Director

Mr. Md. Shamsul Huda, Deputy Regional Director

Mr. D.K. Barua, Deputy Regional Engineer

Mr. Mustafizur Rahman, Asstt. Regional Engineer

Mr. A.K.M. Mazrul Islam, Asstt. Radio Engineer

Mr. Nasimul Quadir Chowdhury, Deputy Controller (News)

Power Development Board, Chittagong

Mr. Liaquat Hossain Bhuiyan, Executive Engineer

Public Works Department, Chittagong

Mr. Abdus Sadeque, Asstt. Engineer

Meteorological Department, Chittagong

Mr. Md. Shahjahan, Regional Director

Telegraph & Telephone Board

Mr. L.H. Bhuya, Division Engineer Microwave

Embassy of Japan, Bangladesh

His Excellency Yoshinori Tanaka, Ambassador extraordinary and plenipotentiary

Mr. Isao Ohashi, First Secretary

JICA Bangladesh Office

Mr. Masahisa Ezaki, Resident Representative

Mr. Keizo Egawa, Deputy Resident Representative

ANNEXE 5 DOCUMENTS OBTAINED

(1) "STATISTICAL BULLETIN of BANGLADESH (monthly)"
Bangladesh Bureau of Statistics, Statistics Division, Ministry of Planning, June, 1986

(2) "1984 - 85, Statistical Yearbook of Bangladesh"
Bangladesh Bureau of Statistics, Statistics Division, Ministry of Planning, December, 1985

(3) "PROJECT PROFORMA for 100 (2x50)kW MF TRANSMITTER, CHITTAGONG"
Radio Bangladesh, National Broadcasting Authority, 1985

(4) "REPORT ON THE STUDY IN THE CAUSES OF DETERIORATION IN THE TRANSMISSION POWER OF THE TRANSMITTER OF RADIO BANGLADESH CHITTAGONG"
Committee headed by Mr. M.N. Mustafa, Deputy Director-General, Radio Bangladesh

(5) "Budget Expenditure (Non Development) (Bengali) NBA
1986 - 87, 1984 - 85, 1981 - 82, 1977 - 78

(6) "Organization Chart", NBA

(7) Justification for man power requirement for operation of 100 (2x50)kW MF Transmitter, Chittagong

(8) SPECIMEN DUTY ROSTER OF TECHNICAL STAFF (RADIO ENGINEER TO EQUIPMENT ATTENDANT) OF 100 (2x50)kW MF TRANSMITTER, CHITTAGONG

(9) MAINTENANCE SCHEDULE BC-10P GATES MW TRANSMITTER

(10) "Programming Policy" (Bengali), NBA

(11) Rules of Procedure for Broadcast of Radio Programmes and News (Bengali)

(12) Radio Bengal (Bengali, Programme Guide)

(13) Social Benefit caused by the execution of the Project

(14) "Extract between Meteorological Department and Radio Bangladesh"

(15) STATISTICAL PRESENTATION OF PROGRAMME CONTENTS (MONTHLY EVALUATION REPORT), Station Chittagong, August, 1986

(16) SOME BASIC INFORMATIONS TOWARDS INSTALLATION OF 100kW TRANSMITTER FOR RADIO BANGLADESH, CHITTAGONG

(17) EXISTING & EXTENSION FLOOR PLAN FOR 100kW MF TRANSMITTING STATION, CHITTAGONG

(18) "INSTRUCTION MANUAL FOR 400 FEET TOWER 100kW CHITTAGONG"

(19) "SITE PLAN OF RADIO SATELLITE STATION AT CHITTAGONG"
Radio Pakistan Karachi, March, '55

(20) DETAILS PLAN MAST & GUY ANCHOR FOUNDATION FOR 400' JAMPRO MAST AT KALURGHAT, CHITTAGONG

(21) SPECIFICATIONS OF EQUIPMENT FOR 100kW MF TRANSMITTER CHITTAGONG

(22) "REPORT ON SUBSOIL INVESTIGATIONS FOR THE 10kW MF TRANSMITTER FOR RADIO PAKISTAN AT KALURGHAT, CHITTAGONG"
SOILTECH International Limited, 1971

(23) MAP OF BANGLADESH showing day and night time medium wave coverage of National Broadcasting Authority (radio)

(24) CHITTAGONG GUIDE MAP 1/20,000

(25) BANGLADESH MAP 1/1,000.000

(26) LAY-OUT PLAN OF BROADCASTING HOUSE AT CHITTAGONG, Dec., '61

6 REFERENCE

রেডিও বাংলাদেশ ও বাংলাদেশ টেলিভিশনের অনুষ্ঠান নীতিমালা

শক্তিশালী গণসংযোগ মাধ্যম হিসাবে রেডিও এবং টেলিভিশনের দায়িত্ব অপরিসীম। তথ্য পরিবেশন, শিক্ষা প্রসার, উন্নয়নমূলক কর্মকাণ্ডে সকলকে উদ্বুদ্ধকরণ ও নির্মল আনন্দদান—এই চারটি ব্যাপারেই হবে অনুষ্ঠান প্রচারের মূল লক্ষ্য। এই চারটি মূল লক্ষ্যের ভিত্তিতে বিভিন্ন অনুষ্ঠান প্রচারের ক্ষেত্রে রেডিও বাংলাদেশ এবং বাংলাদেশ টেলিভিশন নিম্নবর্ণিত নীতিমালা অনুসরণ করবেঃ

১—রাষ্ট্র পরিচালনার মূলনীতি এবং বাংলাদেশ সরকারের রাষ্ট্রীয় আদর্শ ও নীতিমালার উপর ভিত্তি করে অনুষ্ঠান রচনা করতে হবে।

২—বাংলাদেশের রাষ্ট্রীয় নীতি সম্পর্কে জনসাধারণকে শিক্ষিত/অবহিত করে তাদেরকে রাজনৈতিক, রাষ্ট্রীয়, সামাজিক ও সর্বোপরি দেশপ্রেমের চেতনাসম্পন্ন দায়িত্বশীল নাগরিক হিসাবে গড়ে তোলার বাস্তব পদক্ষেপ গ্রহণ করতে হবে।

৩—বাংলাদেশের সার্বভৌমত্ব রক্ষা, রাজনৈতিক স্থিতিশীলতা ও অর্থনৈতিক উন্নতির জন্য বাংলাদেশী জাতীয়তাবাদের প্রকাশ ও বিকাশ সাধন করতে হবে।

৪—দেশীয় সংস্কৃতি অগ্রগতির জন্য বাংলাদেশের আবহমান নিজস্ব মুসলিম সংস্কৃতি, ঐতিহ্য ও ভাবধারার প্রতিফলন, বাংলাদেশী সংস্কৃতির সঙ্গে জনসাধারণের নিবিড় যোগসূত্র স্থাপন এবং বিভিন্ন অঞ্চলের সাংস্কৃতিক ধারাকে বাংলাদেশী জাতীয়তাবাদ ও দেশপ্রেমের আদর্শে অনুপ্রাণিত করে বাংলাদেশী সংস্কৃতির সুষ্ঠু প্রতিফলন ও পরিবর্ধনের চেষ্টা করতে হবে।

৫—সকল ধর্মীয় অনুভূতির প্রতি পূর্ণ শ্রদ্ধা প্রদর্শন করা হবে। কোন জাতি, ধর্ম, সম্প্রদায় বা ব্যক্তি বিশেষের প্রতি কোনরূপ অবমাননা, শ্লেষ, কটাক্ষ বা সমালোচনা করা যাবে না এবং সাম্প্রদায়িকতা পরিহার করতে হবে।

৬—উন্নয়নমূলক কর্মকাণ্ডে অংশগ্রহণ, বিশেষ করে স্বেচ্ছাভিত্তিক অংশগ্রহণ জনসাধারণকে উদ্বুদ্ধকরণ এবং এই লক্ষ্যের বাস্তবায়নে আলোচনা অনুষ্ঠান ও উন্নয়নমূলক প্রকল্পের উপর যথাসম্ভব সচিত্র প্রতিবেদন উপস্থাপিত করতে হবে। শ্রমের মর্যাদা ও কায়িক পরিশ্রমের প্রয়োজনীয়তা সম্পর্কে জনসাধারণকে সচেতন করার প্রচেষ্টা চালাতে হবে। ব্যক্তিগত ও সামাজিক কল্যাণ এবং অর্থনৈতিক উন্নতির জন্য নিজ হাতে কাজ করা যে অবমাননাকর নয় এবং এজন্যে কোন পেশা বা বৃত্তি যে হেয় নয়, অনুষ্ঠানের মাধ্যমে তা ফুটিয়ে তুলতে হবে।

৭—সংস্কৃতি ও চিত্তবিনোদনমূলক অনুষ্ঠানের সঠিক মূল্যায়ন করে শ্রোতা দর্শকদের নির্মল আনন্দ পরিবেশনের প্রচেষ্টা চালাতে হবে। বাংলাদেশী সংস্কৃতির সমৃদ্ধির জন্য

বিভিন্ন অনুষ্ঠানে দেশের প্রত্যন্ত অঞ্চলের শিল্প ও শিল্পীদের অনুসন্ধান ও আবিষ্কার করে তাদেরকে অনুপ্রাণিত করতে হবে এবং জনসমক্ষে তুলে ধরতে হবে।

৮—বাংলা ভাষাকে রাষ্ট্র ভাষার যোগ্য মর্যাদায় সুপ্রতিষ্ঠিত করার লক্ষ্যে বিভিন্ন অনুষ্ঠানের এবং এই উদ্দেশ্যে সঠিক বাংলা উচ্চারণের একটি আদর্শ মান স্থাপনের চেষ্টা করতে হবে। সংবাদ পাঠ ও অনুষ্ঠান ঘোষণার ক্ষেত্রে কোনক্রমেই উচ্চারণের মান শিথিল করা যাবে না।

৯—রেডিও বাংলাদেশ ও বাংলাদেশ টেলিভিশনের অনুষ্ঠান মূলতঃ বাংলায় প্রচার করা হবে। সামগ্রিক অনুষ্ঠান নীতিমালার সংগে সামঞ্জস্য রক্ষা করে সংবাদ, বিদেশী ছায়াছবি ও সংগীত প্রচারিত হবে এবং বিনিময় অনুষ্ঠান প্রচারের ক্ষেত্রে প্রয়োজনবোধে এই নীতি শিথিল করা যাবে।

১০—নাটক, লোক সংস্কৃতিমূলক ও অন্যান্য অনুষ্ঠানের প্রয়োজনে আঞ্চলিক ভাষা ব্যবহার করা যাবে, তবে কোনক্রমেই কোন অঞ্চলের প্রতি কটাক্ষ করার জন্য আঞ্চলিক ভাষা ব্যবহার করা যাবে না।

১১—কৃষি ও শিল্প ক্ষেত্রে উৎপাদন বৃদ্ধি এবং দেশকে স্বনির্ভর করে গড়ে তোলার আন্দোলনে জনসাধারণকে অনুপ্রাণিত করতে হবে। বিশেষ করে কৃষক, শ্রমিক ও অন্যান্য কর্মীদের গুরুত্বপূর্ণ ভূমিকা ও দায়িত্ব পালনে উদ্বুদ্ধ করতে হবে।
বিভিন্ন অনুষ্ঠানে সাধারণ মানুষের সমস্যা ও তাদের আশা-আকাঙ্ক্ষার প্রতিফলনের ব্যবস্থা করতে হবে।

১২—জনসংখ্যা বৃদ্ধির ভয়াবহতা সম্পর্কে বিভিন্ন অনুষ্ঠানের মাধ্যমে জনগণকে সদা সচেতন রাখতে ও এ সম্পর্কে কার্যকর ব্যবস্থা গ্রহণে তাদেরকে আগ্রহী করে তুলতে হবে। শালীনতা, রুচি ও দেশীয় কৃষ্টির প্রতি যথেষ্ট দৃষ্টি রেখে জনসংখ্যা নিয়ন্ত্রণ কার্যক্রম প্রচার করা হবে।

১৩—দেশের প্রতিটি নিরক্ষর মানুষকে স্বাক্ষর হতে সচেতন ও আগ্রহী করার জন্য অনুষ্ঠান রচনা ও প্রচার করতে হবে।

১৪—জনসাধারণকে দেশের শিল্পের উন্নয়ন ও দেশের প্রযুক্তি উদ্ভাবনে উদ্বুদ্ধ করে তুলতে হবে।

১৫—যুব সম্প্রদায়ের সৃজনশীল চিন্তাধারা ও শক্তিকে কর্মক্ষেত্রে নিয়োগের পথ নির্দেশ দিতে হবে এবং তাদের সমস্যা সমাধানের ফলপ্রসূ ইঙ্গিত প্রদান করতে হবে।

১৬—রাজনৈতিক, অর্থনৈতিক, ধর্মীয় তথা সমাজ জীবনের সর্বক্ষেত্রে পুরুষের পাশাপাশি মহিলাদের সমমর্যাদা ও সক্রিয় অংশগ্রহণের লক্ষ্যে অনুষ্ঠানের মাধ্যমে মহিলা সমাজকে

উদ্বুদ্ধ করার বাস্তব পদক্ষেপ গ্রহণ করতে হবে, যেন মহিলা সমাজ আমাদের জাতিকে প্রত্যয়দীপ্ত রাখার ব্যাপারে সত্যিকারের অর্থপূর্ণ ভূমিকা পালন করতে পারে।

১৭—শিশুদের সৌজন্য শিক্ষা, পরিষ্কার পরিচ্ছন্ন থাকা, ধর্ম, সমাজ ও জাতীয় জীবনের এবং বিশেষ করে ইসলামের মহাপুরুষদের আদর্শের প্রতি আকৃষ্ট করে তুলতে হবে। ছোটদের অনুষ্ঠানে ভাই-বোন, পিতা-মাতা, বয়োজ্যেষ্ঠ ও প্রতিবেশীদের সাথে শ্রদ্ধা, সৌহার্দ্য ও সহযোগিতামূলক সম্পর্কের প্রতিফলনকে প্রাধান্য দেওয়া হবে। ছোটদের অনুষ্ঠানে পরনিন্দা, বিবাদ কলহের দৃশ্য পরিহার করতে হবে। দেশপ্রেম ও চরিত্র গঠনের সুশিক্ষা প্রদানের দিকে বিশেষ লক্ষ্য রাখতে হবে।

১৮—নৈতিকতাবোধের উন্নয়ন, সামাজিক কুসংস্কার থেকে মুক্তি এবং সমাজ বিরোধী কার্যকলাপ অবদমনের দায়িত্ব পালন করার লক্ষ্যে সকল রকম দুর্নীতি দমন ও সমাধানের সুস্পষ্ট ইংগিত প্রদান করতে হবে।

১৯—অনুষ্ঠানে কোন প্রকার অশোভন উক্তি উচ্চারণ করা যাবে না।

২০—অনুষ্ঠানে সরাসরি বা বিজ্ঞাপনের মাধ্যমে কোন রাজনৈতিক দলের বক্তব্য বা মতামত প্রচার করা যাবে না।

২১—অনুষ্ঠানে ব্যক্তিগত, পারিবারিক ও সামাজিক জীবনে সততা, আনুগত্য, শৃঙ্খলা, দেশপ্রেম, মিতব্যয়িতা ও নাগরিক দায়িত্ববোধ ফুটিয়ে তুলতে হবে।

২২—জাতীয় সম্পদ রক্ষণাবেক্ষণের জন্য সংশ্লিষ্ট সকল কর্মচারী এবং জনসাধারণকে দায়িত্বশীল হওয়ার জন্য সচেতন করে তুলতে হবে।

২৩—আইনের প্রতি শ্রদ্ধা প্রদর্শনের মনোভাব জাগরূক করে তুলতে হবে।

২৪—কোন মানুষ বা প্রাণীর প্রতি নির্যাতন-এর দৃশ্য অনুষ্ঠানে প্রচার করা যাবে না। নাটকের প্রয়োজনে বিশেষ ক্ষেত্রে এই নীতি শিথিল করা যেতে পারে।

২৫—অনুষ্ঠানে স্বাধীনতা সংগ্রামের প্রকৃত ও সর্বজন স্বীকৃত মুক্তিযোদ্ধাদের ভূমিকা গৌরবান্বিত করতে হবে।

২৬—দেশী ও বিদেশী ছবি/অনুষ্ঠানে অশ্লীল চুম্বনের দৃশ্য সর্বোতোভাবে পরিহার করতে হবে। হিংসাত্মক, সন্ত্রাসমূলক এবং আমাদের সাংস্কৃতিক মূল্যবোধের পরিপন্থী কোন অনুষ্ঠান প্রচার করা যাবে না।

২৭—বিজ্ঞাপনে প্রদত্ত পণ্যের উৎকর্ষ প্রচার করতে গিয়ে অন্য কোন পণ্যকে হেয় করা যাবে না। বিজ্ঞাপনে কোন অশ্লীল বা অশোভন দৃশ্য বা উক্তি থাকতে পারবে না।

No.2 Radio Programme Table (including statistical Presentation of Programme Contents of Chittagong Station, Aug., '86)

ON AIR TIME SCHEDULE (CHITTAGONG RADIO STATION)

WEDNESDAY 1 OCTOBER 1986

1st programme

MORNING

6:00	Broadcasting from Dhaka
6:20	A) Weather forecast
	B) Programme Introduction
6:25	Agricultural talks
6:30	Morning Song
6:40	A) Weather forecast
	B) Music
6:45	Rabindra Song
6:55	Classical Music
7:00	Broadcast from Dhaka
7:25	Patriotic Song
7:30	Chalantika: News from Chittagong broadcasting area
7:35	Modern Song
7:45	Folk Songs
8:00	Local Bengali news
8:05	Nazrul Songs
8:20	Regional Song
8:30	Hasan Rajar Song
8:45	Classical Song
9:00	Broadcast from Dhaka
9:05	Rabindra Song
9:15	Gitalee
9:30	The end

2nd programme

12:00	A) Weather forecast
	B) "Lost" news (Announcement) and Music

AFTERNOON

12:05	Patriotic Songs
12:10	Folk Songs
12:20	Broadcast from Dhaka
01:05	Advertisement programme
02:50	Rabindra Songs
03:00	Broadcast from Dhaka
03:05	Happy life: Family planning programme
03:30	The end

3rd programme

AFTERNOON

04:30	Modern Songs
04:40	Lalon Song
04:50	Nazrul Songs
05:00	Broadcast from Dhaka
05:05	Paharika: Programme in Tripura Language for tribal people
05:25	Tribal News in Tripura language
05:30	Local Bengali News
05:35	Local English News
05:40	Programme introduction and Music
05:45	Rabindra Songs
05:55	Broadcast from Dhaka
06:00	Programme for farmers
06:30	Broadcst from Dhaka
06:35	Modern Songs
06:45	Folk Songs
06:55	A) Weather forecast
	B) Music
07:00	Broadcast from Dhaka
08:45	National programme/Chorus Religious Songs

09:00	A) Weather forecast
	B) Music
09:05	News Rythm
	Radio Description on activities in Chittagong broadcasting zone
09:20	Nazrul Songs
09:30	Broadcast from Dhaka
09:55	Patriotic Songs
10:00	Programme for Cenema Songs
10:30	Classical Songs
11:00	Broadcast from Dhaka
11:10	A) Weather forecast
	B) Tomorrow's programme
11:15	Religions Songs
11:25	A) Recitation from Al-Quran and translation
	B) Conclusion announcement and National anthem
11:30	The end

THURSDAY 2nd October 1986

1st programme

MORNING

06:00	Broadcast from Dhaka
06:20	A) Weather forecast
	B) Programme introduction
06:25	Agricultural talks
06:30	Morning Song
06:40	A) Weather forecast
	B) Music
06:45	Rabindra Song
06:55	Classical Song
07:00	Broadcast from Dhaka
07:25	Patriotic Song
07:30	Chalantika: News from Chittagong broadcasting zone
07:35	Modern Song
07:45	Folk songs
08:00	Local Bengali News
08:05	Nazrul Song
08:20	Folk Song
08:30	Rabindra Song
08:45	Classical Song
09:00	Broadcast from Dhaka
09:15	Modern Song
09:00	The end

2nd programme

12:00	A) Weather forecast
	B) "Lost" News and Music

AFTERNOON

12:05	Patriotic Song
12:10	Nazrul Song
12:20	Broadcast from Dhaka
01:05	Advertisement programme

02:50	Rabindra Song
03:00	Broadcast from Dhaka
03:05	Happy life : Programme about family planning
03:30	The end

3rd programme

AFTERNOON

04:30	Modern Song
04:40	Nazrul Song
04:50	Guiter
05:00	Broadcast from Dhaka
05:05	Paharika : Programme for Tribal people in Marma Language
05:25	Tribal News in Marma Language
05:30	Local Bengali News
05:35	Local English News
05:40	A) Programme introduction
	B) Music
05:45	Rabindra Song
05:55	Broadcast from Dhaka
06:00	Programme for farmers
06:30	Broadcast from Dhaka
06:35	Modern Song
06:45	Folk Song: Rabiul Hag
06:55	A) Weather forecast
	B) Music
07:00	Broadcast from Dhaka
08:45	National programme/Kawali Chorus
09:00	A) Weather forecast
	B) Music
09:05	Modern Song
09:15	Folk Song
09:30	Broadcast from Dhaka
10:00	Religious Songs
10:30	Classical Songs
11:00	Broadcast from Dhaka
11:10	A) Weather forecast
	B) Tomorrow's programme

11:15	Religious Songs
11:25	A) Recitation from Al-Quran and translation
	B) Conclusion announcement and National Anthem
11:30	The end

FRIDAY 3 October 1986

1st programme

MORNING

06:00	Broadcast from Dhaka
06:20	A) Weather forecast
	B) programme introduction
06:25	Agricultural talks
06:30	Dawn Song
06:40	A) Weather forecast
	B) Music
06:45	Rabindra Song
06:55	Classical Song
07:00	Broadcast from Dhaka
07:20	Patriotic Song
07:30	Chalantika : News from Chittagong broadcasting zone
07:35	Modern Song
07:45	Nazrul Song
08:00	Local Bengali News
08:05	Classical Song
08:20	On the way to light Religious programme
08:25	Islamic Song
08:35	Programme for learner of classical music
09:00	Broadcast from Dhaka
09:05	Presentation
	Song of the North
09:10	Child-youth fair programme for child and youth
10:00	The end

2nd programme

12:00	A) Weather forecast
	B) "Lost" News and Music

AFTERNOON

12:05	Advertisement programme
12:30	Azan for Zummah
12:35	Advertisement programme
01:00	Broadcast from Dhaka
01:05	Advertisement programme
02:00	Nazrul Songs
02:30	Classical Songs
02:45	Rabindra Song
03:00	Broadcast from Dhaka
03:30	The end

3rd programme

AFTERNOON

04:30	Modern Song
04:40	Nazrul Song
04:50	Folk Song
05:00	Broadcast from Dhaka
05:05	Paharika : Programme for tribal people in Chakma Language
05:25	Tribal News in Chakma Language
05:30	Local Bengali News
05:35	Local English News
05:40	A) Programme introduction
	B) Music
05:45	Nazrul Song
05:55	Broadcast from Dhaka
06:00	Programme for farmers
06:30	Broadcast from Dhaka
06:35	Songs of Atul Ptashad
06:45	Modern Song
06:55	A) Weather forecast
	B) Music
07:00	Broadcast from Dhaka
08:45	National programme/Rabindra Song Chorus
09:00	A) Weather forecast
	B) Music

09:05	Answeres to the letters from listeners
09:15	Nazrul Song
09:30	Broadcast from Dhaka
10:00	Modern Song from Studio record
10:30	Classical Songs
11:00	Broadcast from Dhaka
11:10	A) Weather forecast
	B) Tomorrow's programme
11:15	Religious Song
11:25	A) Recitation from Al-Quran and translation
	B) Conclusion announcement and National Anthem
11:30	The end

SATURDAY 4 October 1986

1st programme

MORNING

06:00	Broadcast from Dhaka
06:20	A) Weather forecast
	B) Programme introduction
06:25	Agricultural talks
06:30	Dawn Song
06:45	Rabindra Song
06:55	Classical Song
07:00	Broadcast from Dhaka
07:25	Patriotic Song
07:30	Chalantika : News from Chittagong broadcasting Zone
07:35	Modern Song
07:45	Folk Song
08:00	Local Bengali News
08:05	Nazrul Song
08:20	Folk Song
08:30	Programme for learners of Songs
09:00	Broadcast from Dhaka
09:05	Rabindra Song
09:15	Modern Song
09:30	The end

2nd programme

12:00	A) Weather forecast
	B) "Lost" News and Music

AFTERNOON

12:05	Patriotic Song
12:10	Religious Song
12:20	Broadcast from Dhaka
01:05	Advertisement programme
02:50	Regional Song
03:00	Broadcast from Dhaka

03:05	Programme for different Songs
03:30	The end

3rd programme

AFTERNOON

04:30	Nazrul Song
04:40	Modern Song
04:50	Regional Song
05:00	Broadcast from Dhaka
05:05	Paharika : Programme for tribal people in Tripura Language
05:25	Tribal news in Tripura language
05:30	Local Bengali News
05:35	Local English News
05:40	A) Programme introduction
	B) Music
05:45	Rabindra Song
05:55	Broadcast from Dhaka
06:00	Programme for farmers
06:30	Broadcast from Dhaka
06:35	Folk Song
06:45	Modern Song
06:55	A) Weather forecast
	B) Music
07:00	Broadcast from Dhaka
08:45	National programme/Religious Song
09:00	A) Weather forecast
	B) Music
09:05	Modern Song
09:15	Nazrul Song
09:30	Broadcast from Dhaka
10:00	Programme for Songs liked by listener
11:00	Broadcast from Dhaka
11:10	A) Weather forecast
	B) Tomorrow's programme

11:15	Religious Song
11:25	A) Recitation from Al-Quran and translation
	B) Conclusion announcement and National Anthem
11:30	The end

SUNDAY 5 October 1986

1st programme

MORNING

06:00	Broadcast from Dhaka
06:20	A) Weather forecst
	B) Programme introduction
06:25	Agricultural talks
06:30	Dawn Song
06:40	A) Weather forecast
	B) Music
06:45	Rabindra Song
06:55	Classical Music
07:00	Broadcast from Dhaka
07:25	Patriotic Song
07:30	Chalantika : News from Chittagong broadcasting zone
07:35	Modern Song
07:45	Vouaiya
08:00	Local Bengali News
08:05	Nazrul Song
08:20	Folk Songs
08:30	Rabindra Song
08:45	Classical Song
09:00	Broadcast from Dhaka
09:05	Regional Song
09:15	Modern Song
09:30	The end

2nd programme

12:00	A) Weather forecast
	B) "Lost" News and Music

AFTERNOON

12:05	Patriotic Song
12:10	Lalon song
12:20	Broadcast from Dhaka

01:05	Advertisement programme
02:00	Rabindra Song
03:00	Broadcast from Dhaka
03:05	Happy life : Programme on population control
03:30	The end

3rd programme

AFTERNOON

04:30	Folk Songs
04:40	Modern song
04:50	Nazrul Song
05:00	Broadcast from Dhaka
05:05	Paharika : Programme for Tribal people in Mixed Tribal Language
05:25	Tribal News in Chakma language
05:30	Local Bengali News
05:35	Local English News
05:40	A) Programme introduction
	B) Music
05:45	Rabindra Song
05:55	Broadcast from Dhaka
06:00	Programme for farmers
06:30	Broadcast from Dhaka
06:35	Regional Song
06:45	Modern Song
06:55	A) Weather forecast
	B) Music
07:00	Broadcast from Dhaka
08:45	National programme/Lalon song
09:00	A) Weather forecast
	B) Music
09:05	Nazrul Song
09:15	Kawali
09:30	Broadcast from Dhaka
10:00	Drama
11:00	Broadcast from Dhaka

11:10	A) Weather forecast
	B) Tomorrow's programme
11:15	Religious Song
11:25	A) Recitation from Al-Quran and translation
	B) Conclusion announcement and Natinal Anthem
11:30	The end

MONDAY 6 October 1986

1st programme

MORNING

06:00	Broadcast from Dhaka
06:20	A) Weather forecast
	B) Programme introduction
06:25	Agricultural talks
06:30	Dawn Song
06:40	A) Weather forecast
	B) Music
06:45	Rabindra Song
06:55	Classical Song
07:00	Broadcast from Dhaka
07:25	Patriotic Song
07:30	Chalantika : News from Chittagong broadcasting Zone
07:35	Modern Song
07:45	Folk Song
08:00	Local Bengali News
08:05	Nazrul Song
08:20	Hasan Raja Song
08:30	Modern Song
08:45	Classical Songs
09:00	Broadcast from Dhaka
09:05	Folk Song
09:15	Chalantika : Programme for songs by Same writer
09:30	The end

2nd programme

12:00	A) Weather forecast
	B) "Lost" news and Music

AFTERNOON

12:05	Patriotic Song
12:10	Nazrul Song
12:20	Broadcast from Dhaka

01:05	Advertisement programme
02:50	Jibantika
03:00	Broadcast from Dkaka
03:05	Happy life : Programme on population planning
03:30	The end

3rd programme

AFTERNOON

04:30	Regional Song
04:40	Nazrul Song
04:50	Modern Song
05:00	Broadcast from Dhaka
05:05	Paharika : Programme for tribal people in "Marma" Language
05:25	Tribal news in Marma Language
05:30	Local Bengali news
05:35	Local English news
05:40	A) Programme introduction
	B) Music
05:45	Rabindra Song
05:55	Broadcast from Dhaka
06:00	Programme on agriculture for rural women
06:30	Broadcast from Dhaka
06:35	World Childs'day
	Comments/Saying
06:45	Modern Song
06:55	A) Weather forecast
	B) Music
07:00	Broadcast from Dhaka
08:45	National programme/Regional Song
09:00	A) Weather forecast
	B) Music
09:05	Nazrul Song
09:15	Modern Song
09:30	Broadcast from Dhaka
10:00	Folk programme
10:30	Broadcast from Dhaka

11:10	A) Weather forecast
	B) Tomorrow's programme
11:15	Religious Song
11:25	A) Recitation from Al-Quran and translation
	B) Conclusion announcement and Natinal Anthem
11:30	The end

TUESDAY 7 October 1986

1st programme

MORNING

06:00	Broadcast from Dhaka
06:20	A) Weather forecast
	B) Programme introduction
06:25	Agricultural talks
06:30	Dawn Song
06:40	A) Weather fore cast
	B) Music
06:45	Rabindra Song
06:55	Classical Music
07:00	Broad cast from Dhaka
07:25	Patriotic Song
07:30	Chalantika : News from Chittagong broadcasting zone
07:35	Modern Song
07:45	Lalon Song
08:00	Local Bengali news
08:05	Nazrul Song
08:20	Folk Song
08:30	Rabindra Song
08:45	Regional Song
09:00	Broadcast from Dhaka
09:05	Nazrul Song
09:15	Programme on Songs ley a solo composer
09:30	The end

2nd programme

12:00	A) Weather forecast
	B) "Lost" news and Music

AFTERNOON

12:05	Patriotic Song
12:10	Folk Song
12:20	Broadcast from Dhaka

01:05	Advertisement programme
02:50	Rabindra Song
03:00	Broadcast from Dhaka
03:05	Happy life : Programme on population planning
03:30	The end

3rd programme

AFTERNOON

04:30	Programme for women
05:00	Broadcast from Dhaka
05:05	Paharika : Programme for Tribal people in Chakma language
05:25	Tribal news in Chakma language
05:30	Local Bengali news
05:35	Local English news
05:40	A) Programme introduction
	B) Music
05:45	Nazrul Song
05:55	Broadcast from Dhaka
06:00	Krishi firm Programme for farmers
06:30	Broadcast from Dhaka
06:35	Rabindra Song
06:45	Modern Song
06:55	A) Weather forecast
	B) Music
07:00	Broadcast from Dhaka
08:45	National programme/Folk Song
09:00	A) Weather forecast
	B) Music
09:05	Modern Song
09:15	Folk Song
09:30	Broadcast from Dhaka
10:00	Programme on Rabindra Song
10:30	Classical Song
11:00	Broadcast from Dhaka
11:10	A) Weather forecast
	B) Tomorrow's Programme

11:15	Religious Song
11:25	A) Recitation from Al-Quran and translation
	B) Conclusion announcement and National Anthem
11:30	The end

---

by Radio Bengal (Bengali, Programme Guide, Oct., 1986)

STATISTICAL PRESENTATION OF PROGRAMME CONTENTS (MONTHLY EVALUATION REPORT)

HOME SERVICE

STATION/SERVICE CHITTAGONG

MONTH AUGUST YEAR 1986.

STATISTICS CALCULATED IN MINUTES

A(i) INFORMATION (POLITICAL, ECONOMIC AND SOCIAL NEWS)

R. No.	Programme	National Bengali	National English	National Total	Local Bengali	Local English	Local Total	International Bengali	International English	International Total
(a)	News	1390	930	2320	305	155	460			2780
(b)	News Commentary	155	155	310						310
(c)	Special Report	[illegible]								155
(d)	PUBLIC AFFAIRS	Radio	Talkies	Cultural	Sports	Miscellaneous	Development	Total		60
	Your Reel	Relayed	from	Dhaka				405		
	Your Reel	15		10	5	15	15	60		
(e)	Other	Weather Bulletin	ROS	Spokesman Summary	Schools Announcements	Universities Announcements	Special Announcements	Others	Total	
		370	80	240	180	60	20	10	960	
	Grand Total: 4770								4770	

Percentage over total Broadcasting hours: 18·3% (Approx)

(ii) MONITORING

Programme	Station Monitored 1	2	3	4	5	6	7	8	9	10	11	12	13	14	15
Monitoring of news															
News Commentary															

Total Hours of DMB (Daily Monitoring Report)

Schedule	Unschedule	Total

Total Number of Failure of Timing not Broadcast (or due to Technical Difficulties) ...

B. RELIGIOUS PROGRAMME

Recitation from the Holy Quran	Reading from the Holy Quran	Reading from Hadith	Reading from Tafsirs	Hymns & Kaw	Qawaliyas	Total	Special Programme: Muslim	Hindu	Buddhist	Christian	Total
30	160			40	15	245	10	30			40

Grand Total of Religious Programme: 285

Percentage of Total Broadcasting hours: 1·09% (Approx)

C. SOCIAL AUDIENCE PROGRAMME — EDUCATIONAL, SOCIAL/CULTURAL AND MOTIVATIONAL

	Educational: Schools Broadcast	Universities/College Forum	Youth Forum	Children Programme	Family Planning		Social/Cultural: Music	Drama/Dramatised	Quiz	Motivational: Women's Programme	Social Broadcast	
	Total	Total	Total	Total	Total	Total	Total	Total	Total	Total	Total	Total
	60	50	—	150	50	45	250	75	30	90	40	415
Grand Total (C): 2285												

Percentage over Total Broadcasting hours: 8·58% (Approx)

D. MUSICAL PROGRAMME: ENTERTAINMENT, SOCIAL/CULTURAL AND MOTIVATIONAL

	Folk	Modern	Tagore	Nazrul	Particle	Classical	Devotional	Religious	Instrumental	Others	Foreign	Total
	Total	Total	Total	Total	Total	Total	Total	Total	Total	Total	Total	
	590	1840	1035	1045	370	1150	490	385	—	1370	—	8535

	One Production	Cinemas: Film	Type	Total	2 WORLD MUSIC	Language	Duration	Total
		—	1210	1210			2hrs	125
Grand Total: 12015								

Percentage over Total Broadcasting hours: 46·1% (Approx)

COMMERCIAL SERVICE

	Spoken Word: Announcements	Advertisement	Other	Music: Film Song	Instrumental	Others	Total
Total	100	1600		1425		130	A: 1700 B: 1555 C: 3255

E. TRANSCRIPTION SERVICE

Type of Songs (minutes)	Dubs	Outgoing	Rejected	Received	Relay	Kinescope	Total	Home	Abroad
Folk									
Modern									
Dancing									
Kawali									
Nazrul									
Tagore									
Particle									
Devotional									
Pop Music									
Other									
Outgoing									
Total:									

	Spotted			Scheduled			(a) Interview	Spoken word		
	Own Production	Collection	Total	Own production	Collection	Total		Commentary		
								Drama/Feature		
								Recitation		
								Other		

(b) Total Announcement ...

(c)	Music		
2.	Total		
3.	International		

(d) Commentary	Spoken word	Music	Total	(f) Number of Records Utilised	Home	Abroad	Total

Grand Total (D): Percentage over Total Broadcasting Hours:

E(a) TALKS/DISCUSSIONS — (b) FEATURE — F. TRIBAL PROGRAMME

Library	Talkers	Some Conversations	Total	Original	Collected	Total	Kirtan	Tribal Dances	Other	Tribal News	3	4	5	6	7	8	9	10	Total
150	215	630	995				480	60	80	155									775

G. NATIONAL HOOK UP — H. IMPORTED PROGRAMME

G. National Hook Up		H. Imported Programme: Broadcast	Not Broadcast		Grand Total:
4700					

Grand Total (G): 995

Percentage over Total Hours: 3·82% (Approx)

Others (not elsewhere specified)

ENTERTAINMENT/SOCIAL/CULTURAL/MOTIVATIONAL

I. DRAMA/PLAY FEATURE	Social	Historical	Fantasy	Adventure	Adaptations Translations	Educational Motivational	Total
Drama	225				60		285
Plays/Talks		60					60
Particle	40						40
Total							385

Grand Total:

Percentage over Total Broadcasting Hours:

F: 775 = 2·97% (Approx)

G: 4700 = 18·03% (Approx)

H:

I: 385 = 1·48% (Approx)

F	775	2·97% (Approx)
G	4700	18·03% (Approx)
H		
I	385	1·48% (Approx)
Total	5860	22·48% (Approx)

J. FEED BACK

(a) Total Number of Letters Received:

Number of Letters Letter Received

Informative	Requestive	Complaint	Requests for Songs	General	Total
110	90	50	800	265	1315

(b) Number of Letters Replied:

One Magazine	By post	Total
70	—	70

(c) Number of Meetings With the Listeners:

Listeners Place Broadcast (Programme)

Radio Broadcast	Outside Broadcast	Total
2	1	3

K. TOTAL TRANSMISSION HOURS: 26060

(a) DURATION OF BREAKDOWN: 373

1st Transmitter	2nd Transmitter	3rd Transmitter	Total
57	86	230	373

(b) TRANSMISSION HOURS:

Medium Wave	Short Wave	Total
26060	—	26060

Percentage of Transmission of Programme by Chittagong Station

Total ... 18090

" Talkies Hours ... 6515 = 36·01%

" Musical Prog. ... 11575 = 63·31%

(c) Total hours of Spoken words: 12880 (d) Percentage of spoken words over total broadcast hours: 49·43% (Approx) Total hours of Music: 13230 (e) Percentage of Music over total broadcast hours: 50·77% (Approx) (f) Signature of the Speaker:

No.3 Television Programme Table

BANGLADESH TELEVISION

BROADCAST TIME SCHEDULE

5th - 11st October, 1986

SUNDAY

12:45	Opening announcement, AL Quran, today's programme
01:00	Asian Games Direct telecast of football final games from Seoul
03:50	Closing ceremony of Asian Games
06:00	Cartoon film The New Adventure of Superman
06:25	Shurobitan
07:00	Asian Games Recorded programme of concluding day
07:40	A Speech by a presidential candidate
08:00	News in Bengali
08:35	Progotir Pathey
08:50	Film
10:00	News in English
10:35	Abohomman
11:25	Khahar/The news
11:40	Close down

MONDAY

05:00	Opening announcement, Al-Quran, Programme summary
05:10	Local news
05:15	Readings from the Geeta
05:20	Special Programme on World Children's Day.
06:10	Sports programme: wrestling
07:00	Sur lahori
07:30	Speech on the occasion of presidential, election
07:50	Some of today's programmes
08:00	8 O'clock news
08:35	On way to progress: Documentary programme

09:30	Rajanigandhya
09:50	Some of tomorrow's programmes
10:10	10 O'clock new
10:35	Film show
11:25	News in Bengali English
11:35	Some of tomorrow's programmes, verses from the Holy Quran, closing announcement, National Flag National Anthem
11:40	Close down

TUESDAY

05:00	Opening announcement, Al-Quran, Programme summary
05:10	Local news
05:15	Reading from the Geeta
05:20	Cartoon : The Great Space Coaster
05:45	Tagore's song
06:10	Documentary film
06:35	Folk song programme
07:30	Programme on Presidential election
07:50	Today's programme
08:00	News in Bengali
08:35	Shuktara
09:50	Tomorrow's programme
10:00	News in English
10:35	Film : The New Perry Mason
11:25	Khabar The news
11:35	Tomorrow's programme, Verses from the Holy Quran, Closing announcement, National Flag and National Anthem
11:40	Close down

WEDNESDAY

05:00	Opening announcement Al-Quran and programme summary
05:10	Local news
05:15	Recitation from the Geeta
05:20	Cartoon film
05:40	Marami, Devotional says
06:10	TV debate
07:00	Nazrul songs
07:30	Programme on Presidential Polls
07:50	Today's programme
08:00	8 O'clock news
08:35	Pragatir pathey
09:00	Film show
09:50	Tomorrow's programme
10:00	News at Ten
10:35	Khatha o. sur
11:25	News
11:35	Tomorrow's programme, verses from the holy Quran closing announcement, National Flag and National Anthem
11:40	Close down

THURSDAY

05:00	Opening announcement, Al-Quran, programme summary
05:10	Local news
05:15	Reading from the Geeta
05:20	Children's programme
05:45	Hijal tomal
06:10	Show programme
07:00	University Postal Union Day
07:30	Programme on Presidential polls
07:50	Today's programme
08:00	8 O'clock news
08:30	Pragatir Pathey

08:50	Sur Sagar
09:14	Movci of the week
09:50	Tomorrow's programme
10:00	News at 10
11:25	Khabar The news
11:35	Verses from the Holy Quran
	National Flag and National Anthem
11:40	Close down

FRIDAY

03:00	Opening announcement,
	Al-Quran, programme summary
03:10	Reading from the Tripitak
03:15	Alar Pathe
03:40	Cartoon : Thunder Cats
04:05	Sports programme : World cup '86
05:55	Cultural programme
05:55	Film show
06:45	Jibaner Allo
07:10	Documentary film
07:30	Programme on Presidential polls
07:50	Today's programme
08:00	News in Bengali
08:35	Weekly drama
09:50	Tomorrow's programme
10:00	News in English
10:35	Film show
11:25	Khabar The news
11:35	Tomorrow's programme,
	verses from the holy Quran,
	closing announcement,
	National Flag and National Anthem
11:40	Close down

SATURDAY

05:00	Opening announcement,
	Al Quran,
	programme summary
05:10	Local news
05:15	Recitation from the Tripitak
05:20	Cartoon film
05:40	Mela for children
06:10	Tagore's song
06:40	Dheeman
07:30	programme on Presidential polls
07:50	Today's programme
08:00	News in Bengali
08:35	Documentary programme on uplift work
09:00	Magazine programme
10:00	News in English
10:35	Film show : Dallas
11:25	Khabar The news
11:35	Tomorrow's programme, verses
	from the holy Quran, closing announcement,
	National Flag and National Anthem
11:40	Close down

---

by The New Nation and the Bangladesh Observer

গণ-প্রজাতন্ত্রী বাংলাদেশ সরকার
তথ্য মন্ত্রণালয়

No. 4

Memorandum of NBA & MET নং- 4(7)/85-Radio/27516

" স্মারকলিপি " তারিখ- 26.6.85

The undersigned is directed to enclose herewith the relevant extract for his kind information and necessary action at his end.

Sd/
(A.S. M. Salim Akhter)
Section Officer.

Chairman,
National Broadcasting Authority
Dhaka.

NATIONAL BROADCASTING AUTHORITY
NBA. HOUSE, SHAHBAG AVENUE, DHAKA

No. DGRB(PP-3)(PA)/85-19 July 2, 1985

Copy forwarded for information and necessary action . The instructions should strictly be followed.

Sd/- 2.7.85
(M.N. MUSTAFA)
Deputy Director General

1. Director General, Bangladesh Television, Dhaka.
2. Chief Engineer, National Broadcasting Authority. Radio Bangladesh/Bangladesh Television, Dhaka.
3. Deputy Director General, (News), National Broadcasting Autority(Radio), Dhaka.
4. Additional Chief Engineer, SPT, Nayarhat, Dhaka.
5. Resident Enginaer, HPT-1/2, Savar, Radio Bangladesh, Dhaka.
6. Resident Engineer, 100 K.W. Transmitter, Radio Bangladesh, Noapara, Jessore.
7. Director, (News), News & Monitoring, Radio Bangladesh, Dhaka.
8. Director (News), Bangladesh Television, Dhaka.
9. Regional Director, Radio Bangladesh, Dhaka/Chittagong/Rajshahi/Rangpur/Sylhet/Khulna.
10. Regional Controler of News, Radio Bangladesh, Chittagong/Rajshahi/Rangpur/Sylhet/Khulna.
11. Regional Engineer, Radio Bangladesh, Dhaka/Chittagong/Rajshahi/Rangpur/Sylhet /Khulna.

Radio Bangladesh
Chittaong

NO. A(31)/85-৫৮৩ Dated: ১৮/৭/৮৫

Copy for information and necessary action to all concern.

২৮/৭/৮৫
(Md. Samshul Huda)
Deputy Regional Director
For Regional Director.

RADIO BANGLADESH

PRE-DISASTER STAGE

(i) Radio Bangladesh shall establish contact with Directorate of Meteorology and ensure that the teleprinter of Radio Bangladesh functions.

(ii) Radio Bangladesh shall broadcast special programme as authorised by Met. Office and the National Disaster Control Centre ,for information and action of the public.

(iii) Radio Bangladesh shall broadcast special programme authorised by Directorate of Meteorology, Directorate of Flood Forecasting and National Disaster Control Centre. Director of Met.will provide interpretations of various warning signals issued to enable the Radio for broadcasting these interpretations.

ART STATE SIGNAL-III&IV.

IV) Radio Bangladesh shall immedialtely broadcast weather forecast from all its stations after feceiving signal (from I to III) from the Director of Meteorology and announce the same at regular intervals. On receipt of warning signal (IV) shall announce it every hour (withfull interpretations as provided by the Directorate of Meteorology, and the National Disaster Control Centre) shall continue such broadcasts after normal transmission without any break. The Radio Station at Dhaka will also broadcast announcement issued by the Directorateof Disaster Control and the Directorate of Meteorology. The Radio Stations at Chittagong Sylhet, Rangpur and Khulna shall also broadcast instructions issued by the local authorities if so required.

V) Radio Bangladesh shall announce instructions relatiing to precautionary measures, as may be issued by the Directorate of Disaster Control and the Directorate of Meteorology.

DANGER/GREAT DANGER(SIGNAL) V-VII/VII)

VI) Radio Bangladesh shall broadcast danger signals every 30minutes and the great danger signal 15 minutes without any break.

VII) Radio Bangladesh shall announce instructions to local authorities for evacuation of people from vulnerable areas to safe places.

No.5 Maintenance Schedule for MW Transmitter of Chittagong Transmitting Station

MAINTENANCE SCHEDULE

BC-10 P GATES M.W. TRANSMITTER

DAILY MAINTENANCE

1. General cleaning of the Transmitter and speech input equipment.

2. Physical checking of the components of the Transmitter including antenna hut for overheating and spark marks and cleaning.

3. Checking of all the clocks and correction of the time with B.B.C. standard wave.

4. Checking of the voltage reading in the O.C.B. room and log in the register.

5. Testing of all the equipment and gears for their normal operation.

WEEKLY MAINTENANCE

MONDAY :

1. Checking and cleaning of feeder unit and meggering of the antenna coupling condensers.

2. To calibrate the antenna current meter at the transmitter hall with that of antenna hut.

3. To clean mast base insulator and bowl insulators at feeder hut.

TUESDAY :

1. Thorough checking and cleaning of the P.A. cubicle

2. Checking of nuts and bolts fil. connectors, terminal strips of P.A. cubicle for losseeness & tightening of the same if needed.

3. Checking and cleaning of the supervisory console.

WEDNESDAY:

1. To check & clean rectifier & power control panel.

2. To check the H.V. contactor K 105 & clean its contacts.

3. Geeneral cleaning of the generators.

THURSDAY :

1. To check & clean spark gaps and adjustment of the same if required.

2. To check & clean feeder hut unit and feeder lines.

3. To check & clean H.V. Aux relay K 104

FRIDAY : 1. To check & clean modulator cubicle.

2. To megger the dead back ladder compenents easily accessible without removing the audio chassis.

3. General checking of the muss and bolts file connector and T.S. of modulator cubicle for looseness and tightning of the same.

SATURDAY : 1. To check and clean the voltage regulator unit.

2. To check and clean speech input equipment.

3. Cleaning of the trenches inside the Transmitter Hall.

SUNDAY : 1. To check and clean speech input equipment.

2. Thorough checking of the receiving aerials and cleaning of the insulators.

3. To prepare reception summary.

MONTHLY SCHEDULE

1st	1.	Check up all measuring equipment.
	2.	Check up calibration of ammeters and voltmeters.
2nd	1.	Inspect of all relays and contacts of Transmitter and clean.
	2.	Clean internally all parts of transmitter including insulators (use) carbon tetrachloride wherever necessary.
3rd	1.	Inspect power amplifier tank coil connection etc. & clean.
	2.	Test and Clean all overload relays, door interlocks, movable fans and coil contacts.
4th	1.	To clean all power switch contacts of transmitter.
	2.	Check up feeder line sag and feeder pole tensioning and rectify if not in order.
5th	1.	Clean all insulators of feeder lines mast base insulators, spark gaps with proper cleaning agent.
	2.	Megger components of tunning hut.
	3.	Check up aerial and feeder line current from tuning hut and calibrate diode rectifier Unit Motor.
6th	1.	Megger all power cables of transmitter speech gear V.R. tunning hut and transmitter.
	2.	Clean all the touch check for tightness of connection at the switch.
7th	1.	Clean all the Iron clad switches junction boxes light shades and fans etc.
	2.	Building ceiling and walls also are to be get cleaned.
	3.	Clean peep hole rings.
8th	1.	Clean low power rectifier contacts with crocus cloth.
	2.	Clean all socket contacts of prong.

9th 1. Check air filter and clean if necessary.

2. General closed inspection all components of T/R for any abnormality, sparking, charring, dry solder, bad contact loose connection loose nuts and bolts dirt tightness and heating etc.

3. Check air pressure switch and clean if necessary.

10th 1. To measure all tube voltage of T/R by substandard voltmeter and adjust if necessary.

2. Measure screen, plate or other voltage of tubes of T/R (wherever possible) compare against original reading & adjust if necessary.

11th 1. Check up exhaust fans and blower & Lubricate grease them wherever necessary.

2. Check up and clean spark gaps of T/R.

3. Take frequency response of lines.

12th 1. To take frequency response of (a) T/R (B) studio console prog. & non amplifier compare the reading with original normalise the results.

13th 1. To take frequency response of limiting amplifier console, preamplifier, boosters of T/Rs etc. for actions as above.

2. To check up all microphones channels all L/s and loud-speaker circuits for quality, loose connection, insulation etc. voltage regulator check up studio consollette measure all voltage and current compare with original roading and adjust if necessary. Check up all faders thoroughly (of studio console and supervisery console) for crackles, hum etc. and clean them thoroughly.

14th 1. Check up mod. men Unit measure all voltage and performance.

(a) Check up B.P.O. Unit as per I/B (b) repeators and equalisers.

(b) change the crystal.

15th	1.	Check up non-amplifier of rack and measure voltages & check up performances.
	2.	Check up jack panel and terminal board, for proper earth loose connection, dry solder etc.
16th	1.	Measure all voltages of limiting amplifier, check up their performance and rectify if there by any abnormality.
	2.	Overall freq. responses of set up 2. check up voltage of T/T booster.
17th	1.	Check up speed operation etc. of turn tables. Clean the filter thorough maintenance & lubrication of T/Rs as per I.B.
18th	1.	Thorough checking all R.F. circuit component check the operation.
19th	1.	To check up all magnets, replacement of coils if needed.
20th	1.	To check up all audio circuit components of T/R and same feeds and measure voltages.
21st	1.	To check up tuning hut of T-type aerial and its associated components.
22nd	1.	Log up all voltages and performance figures.
23rd	1.	To clean and check up frequency monitor.
24th	1.	To check up noise and distortion figures of all equipment.
25th	1.	Check up door interlock circuit, earth circuit and timing relays and adjust if needed.
26th	1.	Check up flick system.
27th	1.	Measure the D.C. resistance of modulation transformer.

28th 1. Measure the D.C. resistance of H.T. transformer, Austin isolation transformer and log the same.

29th 1. Left over items of the month.

30th 1. Cleaning of observation window.

31st 1. Testing of pumps.

NO.6 Reference Data relating to the Existing Antenna

Ref. 6A Experiment on limited voltage and power of a base insulator

In 1971 - 72, NHK (Japan Broadcasting Corporation) conducted performance test on limited voltage and power of the insulator manufactured on trial for the purpose of adoptation to a super high power transmitting station under planning. This tested insulator was the similar-sized one as the one being used for the existing antenna base of Chittagong Radio Transmitting Station. Useful data in relation to investigating whether the existing antenna mast will be able to take 100 kW power were reported.

The following figure shows approximate dimension of the respective insulators tested and used for the existing antenna mast.

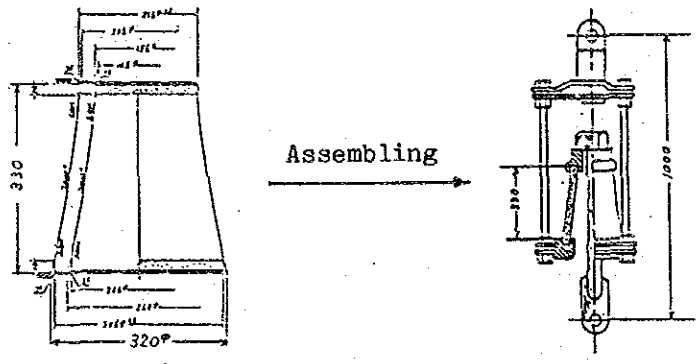

Alumina porcelain insulator

Assembled insulator for guy wire

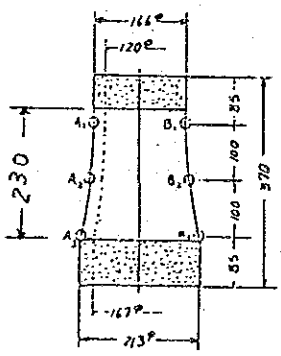

Felspar insulator

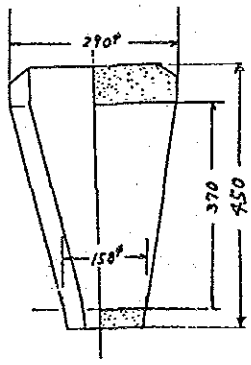

JAMPRO's base insulator

(1) Limited Voltage Characteristics

It was reported that limited voltage of the tested insulator made of alumina porcelain 46.5 kV (peak) at water pouring and 62.5 kV (peak) at dryness on condition that height of a part of porcelain of the tested insulator is 330 mm lower than that of the existing antenna mast 370 mm.

Sparking occured in this case between a rod penetrating at the centre of the tested insulator and a structural frame for an insulator for guy, not between the upper and lower circular edges. In case of a base insulation, sparking voltage of a base insulator without a rod and a structural frame mentioned above will get higher than that of an insulator for guy.

In addition, insulation breakdown voltage of porcelain itself is 10 to 16 kV, while there is no difference between alumina porcelain and felspar.

In case voltage at the antenna base is 23.5 kV (peak) at 100 kW, 100% modulation as mentioned before in item 2-3-3, (2), 3), a margin for insulation breakdown voltage will be doubled (46.5/23.5) at water pouring. It is considered that the existing antenna mast will be utilized for taking 100 kW power by adding a surge protector to the new transmitter and a rain hut and corona ring to the base insulator.

(2) Limited Power Characteristics

Power capacity of the insulator is limited by increment of temperature hereof. In this test, increment of temperature of the insulators of both alumina and felspar was measured on condition of continuous impression of high tension for 240 minutes. A result of measurement was 25°C in case of felspar and 8°C in case of alumina because dielectric loss of felspar is larger than that of porcelain. It proves that alumina is superior to felspar.

By the way, dielectric loss is proportioned to the product of frequency and squared impressed voltage. In case of the existing base insulator, frequency ratio is 873/1000 = 0.88 and voltage ratio 23.5/28 = 0.84 on condition of 23.5 kV at 100 kW, 100% modulation and 873 kHz.

And provided that height of a part of porcelain of the tested insulator is 370 mm and that of the existing base insulator is 450 mm, gradient of electric potential is 0.67 derived from $(370/450)^2$. These 3 factors are combined as $0.88 \times 0.84^2 \times 0.67 = 0.42$. Therefore, dielectric loss of the existing base insulator will be reduced to about 1/2 lower than that of the tested insulator. Increment of temperature is proportioned to dielectric loss, reducing to 12.5°C half of 25°C in case of the tested insulator.

Ref. 6B Dielectric Loss and Increment of temperature of the existing base insulator

Trial culculation of dielectric loss and increment of temperature of the existing base insulator of the antenna of Chittagong Radio Station is as shown below.

Stuff of the base insulator is presumed ordinary porcelain of felspar and physical coefficients are as follows:

Relative dielectric coefficient	(6.0 - 7.0)	:	6.5
Dielectric tangent	(0.006 - 0.01)	:	0.01
Specific gravity		:	2.5
Specific heat		:	0.2

(Source : Handbook of Radio Engineering and Handbook of Electric Engineering, published in Japan)

And impressed voltage for calculation is 8,150 V (r.m.s, 100 kW, 100% modulation) and 873 kHz of a continuous sine-wave.

The following figure is the simplified one of the base insulator for easy calculation (unit: cm)

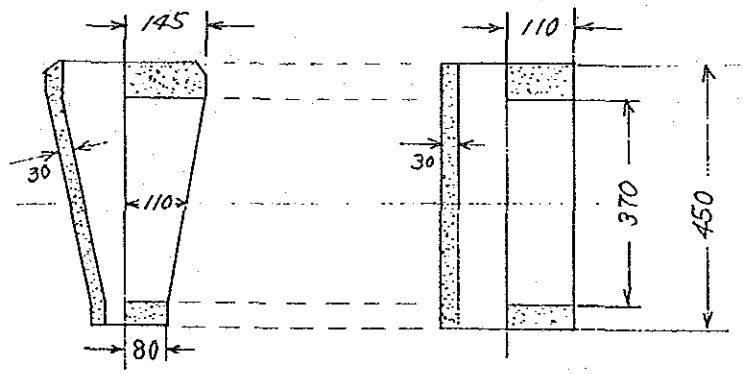

JAMPRO's base insulator

Structurally simplified base insulator

As shown in this figure, a volume of a part of porcelain of the tested base insulator is 8,100 cm^3.

(1) Dielectric Loss

Loss power per unit pv that the insulator absorbs is given

$$pv = 5/9 \cdot f \cdot E^2 \cdot \epsilon \cdot \tan\delta \times 10^{-9} \ (kW/cm^3) \ \ldots\ldots\ldots \ (1)$$

herewith f : frequency (Hz)

E : gradient of electric potential (V/cm)

Impressed voltage is shown V (V: r.m.s.) and distance between two electrodes d (cm), E is

$$E = V/d \ (V/cm)$$

The values mentioned above are substituted for equation (1) :

$$pv = 5/9 \times 873 \times 10^3 \times (8,150/45)^2 \times 6.5 \times 0.01 \times 10^{-9}$$
$$= 1.030 \times 10^{-9} \ (kW/cm^3)$$

Total loss power Pv of the base insulator is

$$Pv = pv \times 8,100 = 0.0083 \ (kW)$$, that is to say, approximately 8 W.

(2) Increment of Temperature

Increment of temperature per second Δt on condition that a physical body M (kg) with specific heat c takes power P (kW) is given

$$\Delta t = P/4.2 \ CM \ \ (^{o}C/sec) \ \ldots\ldots\ldots\ldots\ldots\ldots\ldots\ldots \ (2)$$

Gravity M of the base insulator is

$$M = 2.5 \times 8,100 = 20,250 \ (g)$$
$$= 20.25 \ (kg)$$

Therefore,

$$\Delta t = 0.0083/(4.2 \times 0.2 \times 20.25) = 0.00049 \ (^{o}C/sec)$$

Total increment of temperature ΔT in case of time duration 20 hours of continuous taking of power is

$$T = \Delta t \times 20 \text{ (hours)} = 0.00049 \times 20 \times 60 \times 60 = 35.3 \ (^{o}C)$$

This is a trial of estimation in case of an actual base insulator because the actual value of ΔT not always accords in calculation due to no uniformity of electric field between two electrodes and due to radiation, conduction and convection.

JICA