APPENDIX

Appendix　I

中心部からの供給区域の決定

中心部からの供給区域は，その区域拡大に伴なう送配変電費と中心部の電力原価（注１）の和が周辺地域の火力（Diesel）発電原価（注２）を下廻る範囲内とした。

従って，周辺地域の需用が大きい場合には，中心部からの距離が遠くても，経済的に供給可能となる。

今，負荷率２０％の時の供給距離－限界需用の関係を図示すると，第ＡＰ－Ｉ－１，２図の通りである。

此の場合，周辺地域の火力発電所の有無に依り両者の関係が異る。即ち既設火力発電所がある場合は運転費のみとの比較となるので，供給範囲は狭くなる。

第ＡＰ－Ｉ－１図は１１KV配電線の場合で，対象地に既設火力が無い場合には，例えば３５kmの距離で，２００kW以上の最大需用があれば中央から供給する方が経済的である。Mañazo方面配電線がこれに相当する。

第ＡＰ－Ｉ－２図は，同様に３３KV２次送電線による場合を示す。

注1.　中心部の電力原価としては，Puno に建設する火力発電原価より安いTacna　の火力原価（ＡＰＰ　Ⅱ）にAricota ～Puno 送電経費を加えた0.６７Ｓ／kWH とする。

注2.　周辺地域の火力（Diesel）原価は次の通り

（仕　様　概　要）

出　　力	１０kW～１００kW
力　　率	８０％
運転熱効率	１６％（高標高による低下を見込む）

（固　定　費）

建　設　費	8,０００Ｓ／kW
金　　利	７％
耐用年数	２０年
均等化年経費率	１1.０％（金利，償却，9.４％，その他1.６％）
kWH 当り固定費	0.５０Ｓ／kWH（負荷率　２０％）

（運　転　費）

燃　料　費	0.８５Ｓ／kWH（重油価格1.６０Ｓ／ℓ）
その他の経費	（人件費　油脂費　修繕費等）　0.６９Ｓ／kWH

（発　電　原　価）

固　定　費	0.50	
運　転　費	1.54	
合　計	2.04	S／kWH

Fig. Ap-I-1 Relation of Transmission Distance and Marginal Demand by 10 KV Distribution Line

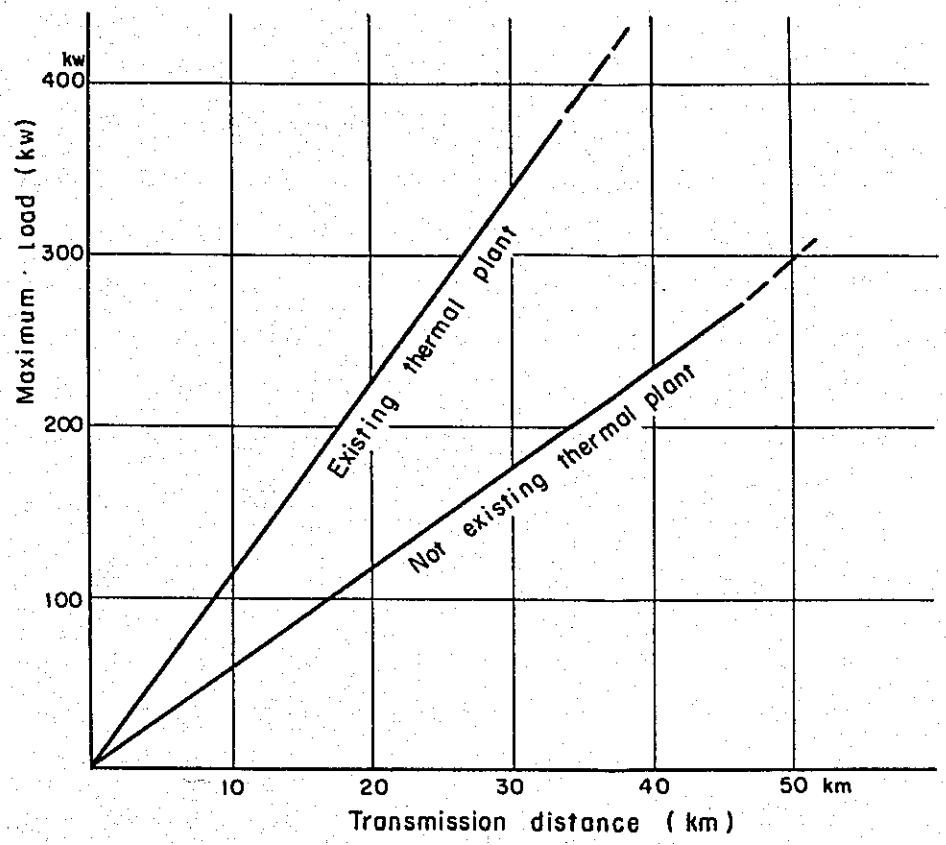

Fig. Ap-I-2 Relation of Transmission Distance and Marginal Demand by 33 KV Transmission Line

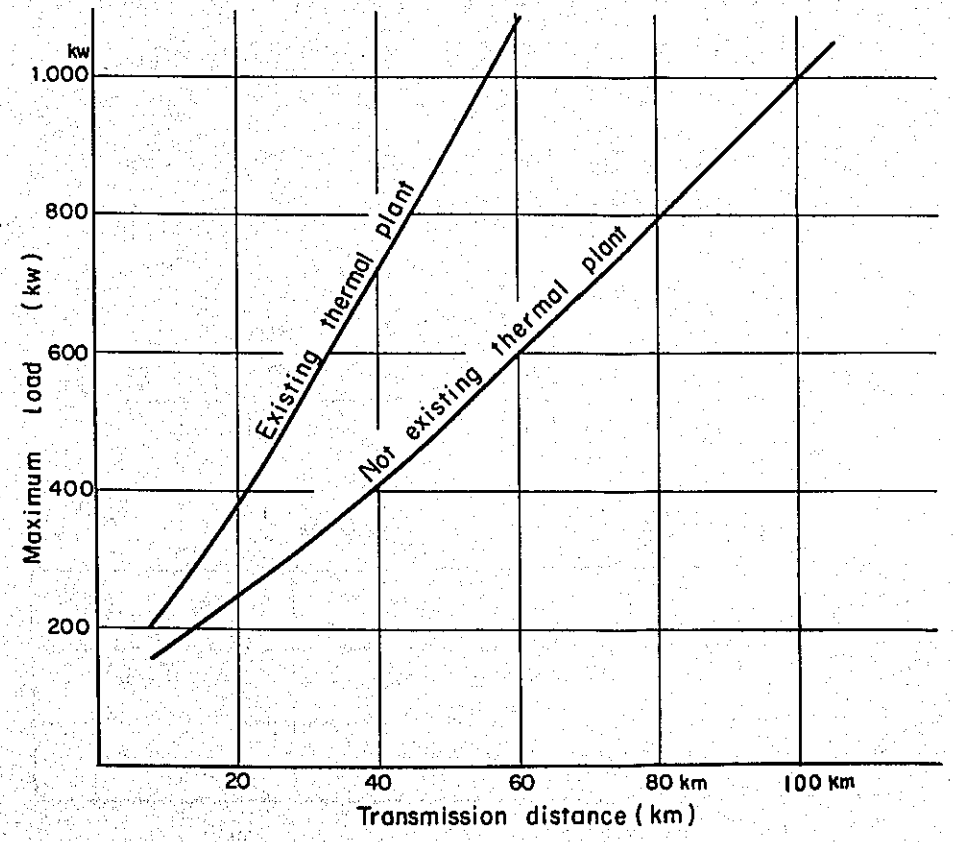

Appendix Ⅱ

代替火力（Diesel）発電原価の算定

(1) Puno系に於ける発電原価

現地調査の結果 Puno 県は海岸から遠く又，標高が高い為，別表に見る様に建設費，燃料費共割高で，従って発電原価はTacnaなどに比べ高くなる。

Puno 県の地理的特殊性から，代替火力としてガスタービンも考えられ，現在Puno 市に設備されているが故障も多く，その発電原価をヂーゼルのそれと比較した場合大差がないと思われるので，此処では，Puno 或は Jnliaca 附近に次の仕様のヂーゼル発電所を建設するものとして，その発電原価を算定すれば以下の計算の様に 1.01S／kWH となる。

（Diesel 発電所仕様）

出　　力	1,000kW
力　　率	80％
運転熱効率	16％

（固　定　費）

建　設　費	7,000S／kW
金　　利	7％
耐用年数	20年
均等化年経費率	11％（金利償却 9.4％　その他 1.6％）
kWH当り固定費	0.16S／kWH（負荷率55％）

（運　転　費）

燃　料　費	0.71S／kWH（重油価格 1.26S／ℓ）
その他経費（人件費・油脂費・修繕費等）	0.14S／kWH

（発電原価）

固　定　費	0.16
運　転　費	0.85
合　計	1.01S／kWH

別表

最近建設された火力発電所建設費

場　所	出　　力	建設単価
Puno	750kW×2	10,700S／kW
Ilave	145kW×2，　70kW×1	9,500S／kW

既設火力発電所燃料費

場　　所	燃　料　費
Puno	0.77 S／kWH
Juliaca	0.79 〃
Lampa	0.91 〃
Huancane	1.31 〃
Desagadero	1.40 〃

(2) Tacnaに於ける火力発電原価

経済評価算定の基準としてTacnaに下記の仕様による火力（Diesel）発電所を建設するものと仮定すれば，発電原価として0.46S／kWHが算定される。

（仕様概要）

出　　力	1,000kW
力　　率	80%
運転熱効率	30%
設備利用率	55%

（固定費）

建設費	4,500S／kW
金　　利	7%
耐用年数	20年
均等化年経費率	11%（金利償却9.4%　その他1.6%）
kWH当り固定費	0.11S／kWH

（運転費）

燃料費	0.23S／kWH
その他経費（人件費，油脂費，修繕費等）	0.12S／kWH

（発電原価）

固定費	0.11S／kWH
運転費	0.35 〃
合　計	0.46S／kWH

Appendix Ⅲ

Aricota～Puno 送電線送電費

金利償却及び運転保守費について，耐用年数間均等化した年間経費を算定し，これを耐用年数間平均の年間kWHで除いてkWH当り送電費を算出した。

1. 金利償却

送電設備，変電設備それぞれについて，1970年における現価を求め，これを耐用年数間に金利7％で資本回収されることとして年間の金利償却と算出した。尚変電設備については設備更新分についても現価還元し，資本回収の対象としてある。

2. 運転保守費

年間均等化経費率が本文に示されているので 1970年における現価に対し，これを乗じて送電，変電両設備についてそれぞれ算出した。

3. 耐用年数間平均電力量

Aricota 系発電所から送電される1970～88年までの 19年間の電力量は第5－1－1図より計算すると60,9970MWH となる。1989年以降はAricota系発電所に供給余力がなくなるので Tacna側に火力発電所を建設し Puno 系に送電することとなるが，これによる発電量は年間約7MW×8760Hとなる。これは全量Puno 側に送電されるので耐用年数の残余31年間についてはこれを以って送電電力量として計算した。

以上の結果，本計画の送電費はkWH当り 0.21 Solesとなる。

計　算　内　容

・ 金利償却　（1970年における現価）

送電設備		74,812×10³ Soles	
変電設備	1期工事分	16,462×10³ Soles	
	（更新分）	3,033 〃	25,449×10³ Soles
	2期工事分	5,183 〃	
	（更新分）	771 〃	
計		100,261×10³ Soles	

100,261×10³ Soles × 0.07245985＝7,265×10³ Soles

・ 運転保守費

送電設備	74,812×2.75％	2,057×10³ Soles
変電設備	25,449×4.42％	1,125 〃
計		3,182 〃

・ 年間経費　7,265＋3,182＝10,447×10³ Soles

・ 耐用年数間平均電力量

$$(609{,}970^{MWH} + 7^{MW} \times 31^{年間} \times 8760^{H}) \times \frac{1}{50} = 50{,}218^{MWH}$$

（1970～88年）　（1989年～2019年）

・ 平 均 原 価

$$\frac{10{,}447 \times 10^3\ Soles}{50{,}218 \times 10^3\ KWH} = 0.208\ Soles/KWH \fallingdotseq 0.21\ Soles/KWH$$

Peru 共和国電気事業法に基づく平均予想電力原価

同法によると予想原価は次の費目から構成され，営業運転開始後３ケ年の平均値をとることとなっている。

・償却費……発電，送電，変電の各設備毎に耐用年数が定められている。

・年配当……8.5％まで認めている。本計画では７％の利率で借款を受けることを予定しているのでそれによって算出した。

・利　益……３％

・送電網拡充基金……５％

・保守運転費……この計画の保守運転費を計上（修繕費を含む）

償　却　費　（1970～72年）	$5{,}814 \times 10^3$ Soles
運転保守費　（同　上）	8,355×　〃
Tacna 系よりの買電料　（同　上）	24,124×　〃
配当，利益，送電網拡充基金（同　上）	41,073×　〃
（建設工事費 $94{,}274 \times 10^3$ Soles × (7＋3＋5)％×3ケ年）	
計	$79{,}366 \times 10^3$ Soles
1970～72年間の販売電力量	$64{,}000 \times 10^3$ KWH
予想平均原価	1.24　S／O／KWH

1. EXISTING METEOROLOGICAL DATA

(1) Meteorological conditions along the transmission line route

(i) Tacalaya

Location	South latitude	17°03.0
	West longtitude	70°24.7
Elevation	4,500 m	

(ii) Rio Quebrada Honda

Location	South latitude	17°09.0
	West longtitude	70°30.9
Elevation	4,200 m	

(iii) Laguna Suche

Location	South latitude	16°55.9
	West longtitude	70°23.3
Elevation	4,452 m	

(iv) Juliaca

Location	Juliaca air-port
Elevation	3,825 m

Table Ap IV-1-1

PRECIPITATION STATION TACALAYA TACNA PERU

RIVER, IN THE BASIN OF ELEVATION 4.500 m UNIT m m YEAR

DATE	JANUARY	FEBRUARY	MARCH	APRIL	MAY	JUNE	JULY	AUGUST	SEPTEMBER	OCTOBER	NOVEMBER	DECEMBER	DATE
1952	- -	- -	- -	- -	- -	- -	5.8 3	29.0 6	13.1 7	0	2.7 1	40.3 12	
1953	159.2 20	163.4 25	106.4 20	13.9 6	0 -	0 -	0 -	0 -	- -	1.0 2	57.3 11	38.2 7	
1954	117.7 12	189.7 26	105.7 21	37.7 10	1.9 2	0 -	0 -	- -	54.0	-	44.6 15	52.4 11	
1955	177.6 30	198.1 23	140.5 23	2.2 1	8.2 1	8.7 2	2.8 2	0 -	4.1 4	8.0 2	6.8 6	90.1 15	
1956	52.9 19	123.2 21	7.5 2	0.5 1	0 -	0 -	0 -	7.2 2	1.3 1	0 -	26.7 5	6.0 5	
1957	34.5 9	91.2 17	92.6 19	5.7 4	0 -	8.8 4	0 -	0 -	1.4 1	9.0 5	3.5 2	109.3 13	
1958	98.0 15	89.5 18	94.0 13	0 -	0 -	0 -	0 -	0 -	5.1 2	7.7 4	5.7 5	10.2 3	
1959	23.5 8	162.1 24	69.8 16	38.9 9	3.4 -	1.8 -	0 -	0 -	2.5 -	0.6 -	3.1 -	156.8 -	
1960	178.6 -	45.2 -	10.5 -	16.5 -	0 -	0 -	0 -	5.5 -	14.9 -	7.4 -	21.7 -	40.2 -	
1961	172.3 26	163.0 24	84.7 19	4.7 -	19.5 -	-	0 -	2.5 -	15.7 -	15.0 -	89.4 -	99.1 -	
1962	130.1 -	133.8 -	76.5 -	47.5 -	0 -	0 -	0 -	0 -	2.5 -	0 -	69.0 -	43.8 -	
1963	140.2 -	188.6 -	152.2 -	51.7 -	13.7 5	0 -	3.5 -	-	34.1 4	7.5 6	26.1 6	64.7 14	
1964	88.3 14	87.4 16	68.8 15	25.1 5	0.4 1	0 -	0 -	7.5 4	0 -	2.6 1	23.1 4	104.7 11	
	NOTA	Wpper : Precipitation Lower : Rainfall day											

ANNUAL TOTAL ( )

Table Ap IV-1-2

PRECIPITATION STATION LAGUNA SUCHE MOQUEGUA PERU

RIVER, IN THE BASIN OF ELEVATION 4.452 m UNIT m m YEAR

DATE	JANUARY	FEBRUARY	MARCH	APRIL	MAY	JUNE	JULY	AUGUST	SEPTEMBER	OCTOBER	NOVEMBER	DECEMBER	DATE
1956	43.9 12	82.9 28	8.0 8	 1	0 -	0 -	0 -	3.5 2	4.5 1	9.0 2	30.0 4	33.3 8	
1957	34.7 9	51.0 16	105.9 21	7.9 6	0.3 1	10.8 7	0 -	0 -	1.1 1	 5	4.3 4	83.9 17	
1958	83.6 16	73.7 25	53.8 18	 2	 2	0 -	0 -	 1	0.5 5	6.2 6	18.7 9	15.2 5	
1959	45.1 8	91.4 22	86.1 20	79.0 17	4.3 -	2.6 -	0 -	4.5 -	2.9 -	 -	4.3 -	122.9 -	
1960	137.9 -	48 -	11.4 -	96.2 -	0 -	0 -	0 -	3.3 -	10.8 -	4.2 -	32.3 -	40.3 -	
1961	116.0 -	106.0 23	74.7 14	7.0 -	12.0 -	 -	0 -	7.0 -	17.2 -	12.6 -	69.1 -	10.7 -	
1962	79.7 -	100.0 -	73.5 -	21.1 -	0 -	0 -	0 -	0 -	0 -	0 -	2.0 -	47.8 -	
1963	86.5 22	142.0 -	111.5 -	51.6 -	8.2 3	0 -	3.0 -	2.5 1	17.0 4	9.0 2	17.0 4	54.5 12	
1964	64.3 8	96.0 18	51.4 13	21.2 5	6.0 2	0 -	0 -	4.5 3	0 -	0 -	18.7 5	76.3 11	
	NOTA	Wpper : Precipitation Lower : Rainfall day											

ANNUAL TOTAL ( )

Table Ap IV- 1 - 3

PRECIPITATION STATION JULIACA PUNO PERU

RIVER, IN THE BASIN OF ELEVATION 3.823 m UNIT m m YEAR

DATE	JANUARY	FEBRUARY	MARCH	APRIL	MAY	JUNE	JULY	AUGUST	SEPTEMBER	OCTOBER	NOVEMBER	DECEMBER	DATE
1961	-	-	-	-	-	-	-	-	9.8	15.0	112.1	82.7	
1962	8.2	48.2	143.6	31.3	2.2	0	0	0	39.7	24.3	20.3	169.0	
1963	118.1	143.0	170.4	49.6	13.4	0	0	1.0	37.5	66.8	39.9	91.4	
1964	67.2	111.6	120.8	24.7	15.7	0	2.7	0	9.8	48.6	56.7	57.9	
1965	92.5	97.7	77.0	30.0	1.0	0	1.0	0	9.0	11.9	51.5	141.4	
1966	58.4	71.7	40.6	18.9	43.5	0	0	0	21.8	34.6	54.5	53.9	
1967	62.0												

ANNUAL TOTAL ( )

Table Ap IV-1-4

TEMPERATURES STATION TACALAYA TACNA PERU

RIVER. IN THE BASIN OF ELEVATION 4,500 m UNIT °C YEAR

DATE	JANUARY	FEBRUARY	MARCH	APRIL	MAY	JUNE	JULY	AUGUST	SEPTEMBER	OCTOBER	NOVEMBER	DECEMBER	DATE
1952							20.3 0.5	22.2 1.7	— —	— —	20.5 -0.9	19.5 0.7	
							23.0 2.5	26.0 5.0	— —	— —	22.0 2.0	23.0 4.0	
							12.0 -3.0	16.0 -1.0	— —	— —	18.5 -3.5	24.0 -3.0	
1953	17.5 3.0	17.5 4.2	18.5 3.6	20.0 2.0	— —	11.2 -4.2	11.1 -5.0	13.3 -4.4	— —	14.2 -2.5	14.4 -0.6	14.4 -0.6	
	22.0 6.0	22.0 6.0	27.0 6.5	22.5 5.0	— —	14.7 -0.6	15.3 -1.7	16.4 -0.6	— —	17.8 2.2	18.9 2.8	17.8 2.8	
	13.0 -1.0	13.0 2.0	14.0 0	15.0 -1.0	— —	5.8 -6.9	7.8 -10.0	10.5 -8.3	— —	16.3 -8.3	7.2 -3.3	7.2 -6.7	
1954	13.3 -1.1	9.8 -0.6	10.6 -1.7	12.2 -1.7	11.7 -3.8	10.6 -6.3	10.9 -6.4	13.2 -4.6	13.3 -4.2	13.8 -4.1	13.1 -3.1	13.7 -2.4	
	19.4 1.1	12.6 1.4	14.4 1.7	15.6 1.1	15.0 0	13.9 -3.8	13.3 -3.8	16.7 -1.7	17.2 -0.3	17.8 0.6	16.7 0.6	17.8 0.8	
	6.7 -4.4	6.4 -5.8	7.2 -5.0	10.6 -6.1	7.8 -6.1	6.1 -10.6	5.6 -10.6	10.0 -8.1	9.7 -8.1	11.4 -6.6	11.1 -6.7	10.6 -5.6	
1955	10.8 -1.2	10.6 -0.6	11.3 -1.3	12.8 -3.3	11.1 -3.9	10.0 -5.0	10.0 -6.1	11.2 -6.8	13.2 -4.3	13.5 -5.4	14.5 -4.4	11.3 -3.4	
	14.4 1.1	14.4 2.2	14.4 1.1	16.1 0.6	15.6 -1.7	12.2 -2.2	13.9 -3.3	15.6 -3.3	17.8 -1.1	16.7 -1.1	19.4 -1.1	15.0 0	
	7.2 -4.4	7.2 -3.3	8.6 -5.0	10.6 -6.7	7.2 -7.8	6.1 -8.9	2.2 -10.0	7.8 -10.6	7.2 -9.4	9.4 -10.6	9.4 -8.3	7.8 -9.4	
1956	10.8 -3.5	13.0 -1.8	13.8 -3.2	13.3 -5.4	11.9 -6.8	10.2 -8.2	9.8 -8.6	11.1 -7.1	12.7 -5.2	14.1 -6.0	13.0 -5.2	12.4 -4.2	
	14.4 -0.6	16.1 0.6	18.3 -0.6	17.8 -1.1	15.0 -1.1	13.3 -3.9	12.2 -2.2	13.3 -1.1	17.8 -0.6	18.3 -1.1	16.1 1.7	15.6 0	
	6.1 -7.2	10.0 -3.3	11.1 -6.7	10.6 -9.4	8.9 -10.6	7.8 -11.1	6.1 -12.2	7.2 -10.0	8.3 -11.1	12.2 -8.9	10.6 -9.4	7.2 -7.8	
1957	12.8 -3.8	12.2 -2.4	10.9 -2.6	11.8 -4.5	12.7 -4.4	9.8 -3.9	10.3 -4.8	12.1 -3.8	13.3 -3.7	14.1 -1.3	14.0 -1.9	13.6 -1.1	
	15.6 -0.6	14.4 0	13.3 -0.6	15.0 -1.1	16.7 2.2	11.7 -1.1	13.9 0.6	15.6 0	15.6 1.1	21.1 2.2	17.8 1.1	18.3 1.7	
	9.4 -7.2	8.9 -4.4	7.2 -5.6	10.0 -7.2	9.4 -9.4	8.3 -10.6	5.0 -8.9	8.3 -7.2	11.7 -6.7	6.7 -5.6	9.4 -6.1	6.7 -6.1	
1958	12.2 0.1	13.3 0.4	13.2 0.1	13.9 -2.9	12.8 -3.7	13.1 -6.1	12.0 -5.1	13.6 -5.1	13.7 -4.4	15.0 -3.6	14.2 -4.7		
	17.2 2.8	17.5 2.8	17.5 2.8	17.5 0.6	17.0 0	15.0 -3.3	15.5 -2.2	18.0 -2.2	16.0 -1.1	18.0 2.8	19.0 0		
	4.4 -5.0	7.5 -3.9	5.5 -2.8	11.5 -10.0	9.5 -6.7	8.5 -10.6	9.0 -7.8	10.5 -7.8	11.5 -8.3	10.0 -7.2	12.0 -7.8		

NOTE

Upper : Average
Middle : Limit +
Lower : " -
Left : Max
Right : Min

ANNUAL TOTAL ( )

Table Ap IV - 1 - 5

TEMPERATURES STATION RIO QUEBRADA HONDA TACNA PERU

RIVER. IN THE BASIN OF ELEVATION 4.200 m UNIT °C YEAR

DATE	JANUARY	FEBRUARY	MARCH	APRIL	MAY	JUNE	JULY	AUGUST	SEPTEMBER	OCTOBER	NOVEMBER	DECEMBER	DATE
1952								15.6 0.8	15.8 1.6	19.4 0.6	17.2 1.1	16.1 2.5	
								— —	19.4 3.9	25.0 3.3	20.0 5.0	19.4 5.6	
								— —	10.6 -2.8	15.6 -1.7	14.4 -1.1	9.4 -1.1	
1953	15.0 2.8	12.8 3.3	14.7 2.8	16.7 2.2	15.6 0	14.4 0.7	15.6 -1.1	16.7 0	— —	17.8 1.1	17.8 2.2	17.8 3.3	
	17.8 5.0	16.7 5.0	20.0 6.1	20.6 5.6	18.9 2.2	17.8 1.7	18.3 2.2	18.9 2.2	— —	22.2 5.6	21.7 4.4	20.6 6.1	
	10.0 0.6	9.4 0.6	10.0 0	12.8 0	12.8 -3.8	9.4 -4.4	11.7 -3.3	15.6 -2.8	— —	15.6 -3.3	8.8 0	15.6 -1.1	
1954	16.7 3.8	11.1 4.4	15.0 2.8	15.6 2.2	13.3 0	13.9 -0.6	15.0 -0.6	16.9 1.2	16.7 1.1	17.2 0.6	17.5 2.2	17.5 2.8	
	22.2 7.8	13.3 7.2	19.4 6.1	17.8 7.8	16.7 3.3	16.7 1.1	17.8 2.2	19.4 3.3	20.0 4.4	18.9 3.9	21.1 5.6	23.8 9.4	
	10.0 -1.1	6.7 -1.1	10.0 -1.1	13.9 -2.2	5.0 -3.3	7.8 -2.8	10.6 -3.8	11.1 -1.1	11.1 -1.7	13.9 -2.2	10.6 -2.8	11.7 -1.1	
1955	15.8 2.9	15.2 2.9	16.3 2.8	17.2 1.7	15.6 0.6	14.4 0.6	13.3 -0.3	15.2 -0.7	16.7 1.9	17.0 0.4	16.4 0.9	12.4 0.9	
	20.0 8.3	19.4 7.8	21.7 4.4	20.6 3.3	18.9 3.3	17.8 3.3	17.8 1.7	17.8 1.7	20.0 5.0	19.4 5.6	19.4 4.4	16.7 4.4	
	11.1 -0.6	10.6 -0.6	4.4 1.1	14.4 0	12.2 -3.3	12.2 -2.8	1.1 -6.1	11.1 -5.0	11.1 -2.8	13.9 -4.4	13.3 -2.9	7.2 -3.9	
1956	13.2 0.6	13.9 1.8	16.1 1.8	15.2 0.4	14.4 -0.1	13.3 1.4	10.9 -3.2	11.2 -2.5	12.6 -1.9	13.2 -2.6	12.0 -2.1	12.9 -0.9	
	18.9 3.9	15.6 3.9	18.3 5.0	17.8 3.3	17.8 2.8	16.7 2.2	15.0 0.6	14.0 0	17.0 2.0	20.0 2.0	15.0 0	16.0 3.0	
	5.6 -3.9	10.6 -0.6	13.3 -0.6	11.1 -3.9	8.9 -3.3	10.6 -5.6	6.7 -6.1	7.0 -7.0	9.0 -8.0	9.0 -7.0	10.0 -5.0	11.0 -3.0	
1957	12.3 -0.2	11.7 0.8	11.7 0.9	12.4 -0.6	12.9 -1.9	10.4 -2.4	10.4 -4.6	12.2 -2.3	14.1 -2.4	13.1 -0.6	13.2 -0.2	13.0 1.0	
	16.0 4.0	14.0 4.0	16.0 3.0	14.0 2.0	16.0 3.0	13.0 0	14.0 -2.0	16.0 1.0	16.0 0	17.0 2.0	16.0 3.0	16.0 4.0	
	9.0 -3.0	9.0 -2.0	7.0 -2.0	10.0 -5.0	9.0 -5.0	7.0 -5.0	7.0 -8.0	9.0 -5.0	8.0 -5.0	9.0 -4.0	10.0 -4.0	8.0 -3.0	
1958	11.5 1.2	13.0 1.9	12.9 1.1	13.2 -1.0	12.4 -1.3	13.0 -2.7	12.5 -2.9	14.2 -2.8	14.2 -1.1	19.1 -0.8	14.5 -0.9		
	15.0 4.0	17.0 5.0	17.0 4.0	16.0 2.0	16.0 3.0	16.0 -2.0	16.0 0.5	19.0 1.0	19.0 3.0	24.0 3.0	20.0 4.0		
	5.0 -3.0	9.0 -2.0	8.0 -2.0	11.0 -4.0	10.0 -4.0	9.0 -6.0	8.0 -5.0	11.0 -6.0	10.0 -6.0	13.0 -5.5	10.0 -6.0		

NOTE

Upper : Average
Middle : Limit +
Lower : " -
Left : Max
Right : Min

ANNUAL TOTAL ( )

Table Ap IV-1-6

TEMPERATURES STATION LAGUNA SUCHE MOQUEGUA PERU

RIVER, IN THE BASIN OF ELEVATION 4.452 m UNIT °C YEAR

DATE	JANUARY	FEBRUARY	MARCH	APRIL	MAY	JUNE	JULY	AUGUST	SEPTEMBER	OCTOBER	NOVEMBER	DECEMBER	DATE
1956	11.2 -4.6 15.5 -1.0 7.5 -9.0	12.3 -3.6 15.5 0.5 7.9 -8.0	14.0 -6.6 165 -0.2 10.5 -11.5	12.2 11.8 15.5 -4.5 7.0 -20.0	9.4 -13.3 15.0 -4.0 5.5 -18.2	8.1 -15.4 14.0 -2.0 3.5 -20.0	7.6 -18.6 12.0 -9.5 3.6 -26.3	9.4 -19.8 12.5 -9.5 7.0 -27.6	11.4 -13.3 16.0 -6.0 6.0 -13.6	13.3 -14.4 18.0 -5.0 9.6 -21.3	13.3 -13.5 19.0 -4.0 9.5 -17.6	12.9 -7.6 17.0 0.5 6.5 -11.0	
1957	12.5 -4.9 16.0 0.5 7.0 -14.0	11.5 -1.4 15.0 2.0 7.5 -5.0	10.4 -1.8 14.5 2.5 4.0 -6.0	12.3 -5.3 15.0 -1.0 8.5 -10.5	11.4 -10.3 15.5 0.5 6.5 -15.5	7.0 -10.8 12.0 -2.5 2.0 20.0	7.9 -15.5 13.5 -8.0 1.0 -20.7	11.3 -13.6 17.0 -8.0 5.5 -21.3	11.1 -13.6 16.0 -5.0 2.5 -20.1	13.8 8.9 19.0 3.5 9.5 -20.0	13.0 -8.5 16.0 0.4 8.5 -18.8	12.6 -4.6 16.5 3.5 7.5 -16.0	
1958	10.4 -0.5 16.5 3.0 2.0 -6.0	11.1 0.2 14.0 5.0 7.0 -6.5	12.2 -1.6 17.0 2.5 5.0 -7.0	13.3 -8.5 17.5 -3.0 8.0 -15.5	10.4 -10.9 15.5 -3.0 5.5 -17.1	12.1 -15.6 16.0 -10.0 6.5 -19.4	9.1 -14.7 13.5 -5.0 5.0 -19.4	11.5 -15.7 15.0 -10.0 7.0 -21.3	11.2 -10.7 14.0 1.0 7.0 -20.0	14.1 -10.1 19.0 1.0 9.0 -18.8	13.0 -10.0 16.0 -2.0 8.0 -18.8		

NOTA

Upper : Average
Middle : Limits + −
Lower :
Left : Max
Right : Min

ANNUAL TOTAL ( )

Table ApIV - 1 - 7

TEMPERATURES STATION JULIACA PUNO PERU

RIVER, IN THE BASIN OF _____ ELEVATION 3.823m UNIT °C YEAR _____

DATE	JANUARY	FEBRUARY	MARCH	APRIL	MAY	JUNE	JULY	AUGUST	SEPTEMBER	OCTOBER	NOVEMBER	DECEMBER	DATE
1961									19.1 -0.1 22.0 — — -3.0	20.8 -2.0 29.8 — — -6.0	20.6 1.6 28.0 — — -1.0	18.2 3.1 29.0 — — 0.9	
1962	16.2 3.2 19.0 — — 0.6	16.4 3.3 19.0 — — 0.6	15.2 2.7 18.0 — — 0.4	15.4 -0.4 17.8 — — -7.0	16.1 -3.4 18.5 — — -12.0	14.7 -11.0 16.6 — — -15.0	15.5 -8.6 17.6 — — -13.0	16.2 -9.1 18.5 — — -16.8	17.4 0.7 20.2 — — -3.0	18.7 -2.3 21.0 — — -9.0	18.8 -1.9 21.2 — — -6.0	15.7 2.2 19.0 — — -0.2	
1963	15.9 3.7 18.2 — — 1.0	14.7 3.2 16.0 — — 1.3	15.7 3.2 17.0 — — -0.8	15.7 0.9 17.0 — — -5.5	15.4 -3.0 16.6 — — -7.0	15.2 -9.1 16.6 — — -12.9	15.6 -8.5 17.1 — — -13.6	17.3 -6.9 18.7 — — -12.0	15.8 -2.2 19.0 — — -7.7	18.0 0.1 20.0 — — -5.0	19.6 0.3 22.4 — — -4.0	17.5 2.8 20.0 — — -1.0	
1964	15.6 1.6 20.8 — — -3.4	16.9 2.8 20.0 — — 0	16.4 2.5 19.0 — — -3.0	16.6 -0.2 18.0 — — -7.0	15.5 -4.5 18.0 — — -11.0	15.8 -10.3 17.0 — — -12.4	15.2 -10.8 17.0 — — -15.1	17.2 -7.2 19.0 — — -12.2	11.9 -4.6 20.4 — — -12.0	17.6 -2.4 20.0 — — -8.0	16.7 -1.1 20.6 — — -4.5	17.5 8.2 20.9 — — -3.7	
1965	15.1 1.4 20.6 — — -2.0	16.3 3.1 17.9 — — -1.0	15.8 1.8 17.1 — — -2.5	16.0 -1.1 18.9 — — -3.8	17.1 -7.0 19.2 — — -11.6	15.4 -10.4 17.6 — — -13.6	15.6 -9.4 17.9 — — -16.5	17.0 -7.8 19.1 — — -14.2	17.0 -3.3 20.6 — — -12.2	19.8 -2.7 22.4 — — -6.0	19.3 -0.1 22.6 — — -5.0	17.2 2.8 20.1 — — -2.0	
1966	18.5 2.3 20.8 — — 0	17.9 2.5 20.4 — — 0.1	17.6 0.5 18.9 — — -4.4	17.7 3.1 19.9 — — -6.9	15.4 -2.8 19.0 — — -7.9	16.0 -7.0 18.5 — — -10.1	16.8 -9.8 19.0 — — -16.7	18.4 -5.6 19.8 — — -9.0	19.0 -2.6 20.8 — — -9.0	19.1 1.6 21.3 — — -2.0	18.5 1.6 20.0 — — -4.4	18.1 2.9 21.4 — — -0.9	
1967	19.1 2.3 — — — —												

ANNUAL TOTAL ( )

Table Ap IV-1-8

HUMIDITY

STATION TACALAYA

TACNA PERU

RIVER. IN THE BASIN OF

ELEVATION 4.500 m

UNIT %

YEAR

DATE	JANUARY	FEBRUARY	MARCH	APRIL	MAY	JUNE	JULY	AUGUST	SEPTEMBER	OCTOBER	NOVEMBER	DECEMBER	DATE
1956	-	-	67	69	40	50	53	45	53	60	64	65	-
1957	71	72	77	52	47	51	38	43	54	57	48	54	-
1958	70	72	63	49	51	42	42	39	45	44	44	-	-

ANNUAL TOTAL ( )

Table Ap IV-1-9

HUMIDITY STATION LAGUNA SUCHE MOQUEGUA PERU

RIVER, IN THE BASIN OF ELEVATION 4.452 m UNIT % YEAR

DATE	JANUARY	FEBRUARY	MARCH	APRIL	MAY	JUNE	JULY	AUGUST	SEPTEMBER	OCTOBER	NOVEMBER	DECEMBER	DATE
1956	63	65	52	43	43	20	23	19	29	20	47	22	
1957	35	48	56	39	29	43	19	20	21	24	22	36	
1958	56	53	43	24	22	19	17	14	25	22	32	-	

ANNUAL TOTAL ( )

2. EXISTING PRECIPITATION DATA

PRECIPITATION 1. STATION SAN GABAN CATCHMENT AREA sq·km

RIVER, IN THE BASIN OF ELEVATION 820 m UNIT mm S 13°28' W 70° 20'

YEAR	JAN.	FEB.	MAR.	APR.	MAY	JUNE	JULY	AUG.	SEPT.	OCT.	NOV.	DEC.	ANNUAL
1936										112.7	931.9	660.7	
1964	121.8	70.5	110.1	35.0	38.5	26.9	32.1	31.4	195.0	416.0	34.7	49.7	1,161.7
1965	726.0	720.0	457.0	435.2	285.0	125.0	500.0	211.0	318.0	713.0	602.2	774.0	5,866.4
1966	830.0	516.0	528.0	275.5	450.3	436.1	244.4	153.7	231.1	418.4	492.7	444.8	5,021.0
1967	1,226.4	1,317.8											
TOTAL	1,672.8	1,306.5	1,095.1	745.7	773.9	588.0	776.4	396.1	744.1	1,547.4	1,129.6	1,268.5	12,049.1
AVERAGE	559.3	435.5	365.0	248.6	257.9	186.0	258.8	132.0	248.0	515.8	376.5	422.8	4,016.2

PRECIPITATION 2 STATION OLLACHEA CATCHMENT AREA ____ sq·km

RIVER. IN THE BASIN OF ____ ELEVATION 2,850 m UNIT mm S 13 ° 48' W 70 ° 32'

YEAR	JAN.	FEB.	MAR.	APR.	MAY	JUNE	JULY	AUG.	SEPT.	OCT.	NOV.	DEC.	ANNUAL
1965	149.5	165.5	96.2	79.5	12.5	*13.0	8.0	25.5	116.5	56.0	95.5	156.8	961.5
1966	128.5	146.0	112.9	26.0	46.9	22.9	0.5	8.9	25.7	119.6	120.0	85.2	824.1
TOTAL	278.0	311.5	209.1	105.5	59.4	35.9	8.5	34.4	142.2	175.6	215.5	243.0	1,818.6
AVERAGE	139.0	155.8	104.6	57.8	29.7	18.0	4.3	17.2	71.1	82.8	107.8	121.5	909.3

* : Estimated value from correlation between Curcero precipitation and Ollachea precipitation.

PRECIPITATION 3 STATION CURUCERO CATCHMENT AREA ____ sq·km

RIVER, IN THE BASIN OF ____ ELEVATION 4,395 m UNIT mm. S 14° 21' W 70 ° 01'

YEAR	JAN.	FEB.	MAR.	APR.	MAY	JUNE	JULY	AUG.	SEPT.	OCT.	NOV.	DEC.	ANNUAL
1956					45.0	13.0	0	0	11.0	-	-	-	-
1957	-	-	81.9	145.6	35.3	0	0	4.8	10.0	40.8	81.9	148.3	-
1958	172.8	86.0	54.5	41.9	57.9	0	17.1	1.1	10.6	66.7	58.8	91.9	659.8
1959	124.3	90.3	117.1	59.1	28.4	16.4	0	9.4	5.7	41.4	66.9	59.0	618.0
1960	125.3	80.4	43.1	54.1	30.4	2.0	12.4	8.4	11.5	64.3	91.0	58.3	581.2
1961	73.2	77.6	99.4	81.1	30.4	3.4	0	7.5	12.3	26.6	54.6	96.3	562.4
1962	67.7	95.7	184.9	24.5	15.8	0	0	0	24.2	24.8	31.8	153.2	622.6
1963	160.2	65.4	108.3	16.6	0	0	0	0	60.3	19.6	6.4	80.9	517.7
1964	94.0	77.2	135.1	35.1	0	0	0	0	16.2	21.3	37.6	109.4	525.9
1965	135.6	117.4	49.4	30.1	1.5	0	0	0.1	22.9	24.7	49.3	142.3	573.3
1966	35.2	160.5	110.0	9.5	36.8	0	0	1.8	42.2	63.2	43.8	54.0	557.0
1967	34.9												-
TOTAL	1,023.2	850.5	983.7	497.6	281.5	34.8	29.5	33.1	226.9	393.4	522.1	993.6	5,869.9
AVERAGE	102.3	94.5	98.5	49.8	25.6	3.2	2.7	3.0	20.6	39.3	52.2	99.4	591.0

PRECIPITATION 4 STATION LIMBANI CATCHMENT AREA _____ sq·km

_____ RIVER. IN THE BASIN OF _____ ELEVATION 3,360 m UNIT mm. S 14 ° 08' W 69 ° 43'

YEAR	JAN.	FEB.	MAR.	APR.	MAY	JUNE	JULY	AUG.	SEPT.	OCT.	NOV.	DEC.	ANNUAL
1963											841.0	157.2	-
1964	108.6	145.6	171.9	111.7	17.8	0	11.1	74.3	83.3	75.0	57.6	116.6	973.5
1965	210.6	223.7	122.3	64.7	8.2	0.7	40.5	19.1	98.3	81.5	56.0	276.8	1,202.5
1966	147.5	150.6	139.2	44.7	59.0	20.7	10.6	30.7	5.7	131.7	98.0	118.5	956.9
1967	136.0	151.2											
TOTAL	466.7	519.9	433.4	221.1	85.0	21.4	62.2	124.1	187.3	288.2	211.6	511.9	3,132.8
AVERAGE	155.6	173.3	144.5	73.7	28.3	7.1	20.7	41.4	62.4	96.1	70.5	170.6	1,044.2

PRECIPITATION 5 STATION CUYO CATCHMENT AREA sq·km.

RIVER, IN THE BASIN OF ELEVATION 3,414 m UNIT S 14 ° 28' W 69 ° 32'

YEAR	JAN.	FEB.	MAR.	APR.	MAY	JUNE	JULY	AUG.	SEPT.	OCT.	NOV.	DEC.	ANNUAL
1963									341.0	76.8	186.7	111.5	
1964	77.2	142.8	191.0	64.4	8.5	0	5.3	28.2	46.6	62.7	32.9	103.2	762.8
1965	137.2	112.9	80.0	48.2	2.1	0	1.5	4.7	98.9	18.4	72.0	150.9	726.8
1966	67.1	104.4	86.7	40.8	139.0	0	8.3	67.2	19.8	68.0	73.7	98.8	773.8

TOTAL	281.5	360.1	357.7	153.4	149.6	0	15.1	100.1	165.3	149.1	178.6	352.9	2,263.4
AVERAGE	93.8	120.0	119.2	51.1	49.9	0	5.0	33.4	55.1	49.7	59.5	117.6	754.5

PRECIPITATION 6 STATION SINA CATCHMENT AREA _____ sq·km

_____ RIVER, IN THE BASIN OF _____ ELEVATION 3,600 m UNIT mm S 14 °30' W 69 ° 17'

YEAR	JAN.	FEB.	MAR.	APR.	MAY	JUNE	JULY	AUG.	SEPT.	OCT.	NOV.	DEC.	ANNUAL
1963									93.4	165.8	96.1	191.8	
1964	177.0	307.1	281.6	87.7	0	0	0	114.0	225.1	262.3	232.4	268.2	1,955.4
1965	388.1	309.7	302.2	103.8	0	0	31.2	55.2	232.3	81.0	134.4	398.5	2,036.4
1966	90.5	181.1	76.1	25.8	93.1	0	0	50.3	65.4	270.0	186.3	157.5	1,195.4
1967	122.2	195.1											
TOTAL	655.6	797.9	659.9	217.3	93.1	0	31.2	219.5	522.8	613.3	553.4	824.7	5,187.2
AVERAGE	218.5	266.0	220.0	72.4	31.0	0	10.4	73.2	174.3	204.4	184.5	274.9	1,729.1

PRECIPITATION 7 STATION SNANEA CATCHMENT AREA _____ sq·km

_____ RIVER, IN THE BASIN OF _____ ELEVATION 4,160 m UNIT mm S 14° 40' W 69 ° 32'

YEAR	JAN.	FEB.	MAR.	APR.	MAY	JUNE	JULY	AUG.	SEPT.	OCT.	NOV.	DEC.	ANNUAL
1963										216.9	103.0	876.0	
1964	12.7	124.9	151.1	75.9	56.0	7.3	0	0	32.4	48.6	58.4	70.9	398.3
1965	147.2	71.9	86.5	37.6	0	0	3.2	13.0	35.9	20.6	52.2	64.7	532.8
1966	50.3	140.4	33.8	7.7	35.5	0	0	0	23.7	65.6	77.5	101.6	536.1
1967	40.1	76.2											
TOTAL	210.2	337.2	271.4	121.2	91.5	7.3	3.2	13.0	92.0	134.8	188.1	237.2	1,707.1
AVERAGE	70.1	112.7	90.5	40.4	30.5	2.4	1.1	4.3	30.7	44.9	62.7	75.7	569.0

PRECIPITATION 8 STATION ANTAUTA CATCHMENT AREA _____ sq·km

_____ RIVER, IN THE BASIN OF _____ ELEVATION 4,150 m UNIT mm. S 14 ° 15' W 70 ° 36'

YEAR	JAN.	FEB.	MAR.	APR.	MAY	JUNE	JULY	AUG.	SEPT.	OCT.	NOV.	DEC.	ANNUAL
1963										52.2	62.6	89.8	
1964	36.7	0	208.8	21.7	6.0	0	0	5.4	41.3	21.8	61.3	137.6	540.6
1965	130.8	65.6	160.0	27.6	14.2	6.1	2.7	12.1	72.0	22.3	55.4	72.2	641.0
1966	65.5	22.1	27.9	22.0	49.3	0	0	1.9	33.6	98.3	93.2	68.5	482.3
1967	24.5	93.9											
TOTAL	233.0	87.7	396.7	71.3	69.5	6.1	2.7	19.4	146.9	142.4	209.9	278.3	1,663.9
AVERAGE	77.7	29.2	132.2	23.8	23.2	2.0	0.9	6.5	49.0	47.5	70.0	92.8	554.7

PRECIPITATION 9 STATION NUÑOA CATCHMENT AREA sq·km

RIVER, IN THE BASIN OF ELEVATION 4,135 m UNIT mm. S 14 ° 28' W 70 ° 39'

YEAR	JAN.	FEB.	MAR.	APR.	MAY	JUNE	JULY	AUG.	SEPT.	OCT.	NOV.	DEC.	ANNUAL
1963									68.7	77.3	63.7	107.3	
1964	85.3	111.2	174.6	45.7	31.3	0	0	0	36.0	28.7	62.1	92.7	667.5
1965	151.7	109.3	186.6	67.4	0	0	0	2.6	12.3	32.3	85.8	164.0	812.0
1966	119.0	116.1	93.5	8.7	36.5	0	0	0	29.9	98.8	79.7	88.8	671.0
1967	59.9												
TOTAL	356.0	336.6	454.7	121.8	67.8	0	0	2.6	78.2	159.8	227.6	345.5	2,150.5
AVERAGE	118.7	112.2	151.6	40.6	40.6	0	0	0.9	26.1	53.3	75.9	115.2	716.8

PRECIPITATION 10 STATION SANTA ROSA CATCHMENT AREA ____ sq·km

RIVER, IN THE BASIN OF ____ ELEVATION 4,360 m UNIT mm S 14 ° 35' W 70 ° 43'

YEAR	JAN.	FEB.	MAR.	APR.	MAY	JUNE	JULY	AUG.	SEPT.	OCT.	NOV.	DEC.	ANNUAL
1956					4.4	0	2.2	0	-	-	-	-	-
1957	92.0	-	-	-	-	-	0	8.5	4.9	36.4	75.2	105.0	-
1958	184.7	187.9	99.2	36.3	28.2	0	6.8	14.0	15.2	65.7	51.5	101.5	791.1
1959	87.5	125.6	174.0	118.7	20.2	9.0	0	4.5	25.2	76.1	72.1	80.8	915.7
1960	341.1	131.2	12.0	11.5	0	10.5	0	12.0	24.3	36.7	135.5	79.2	794.0
1961	153.6	122.4	152.2	56.0	52.0	3.0	0	7.0	29.0	27.8	155.2	218.9	997.0
1962	122.0	180.4	175.2	67.0	2.0	0	0	0	10.0	69.0	26.0	148.0	799.6
1963	450.0	370.7	299.2	90.2	4.0	0	0	0	55.2	43.3	98.0	65.0	1,475.6
1964	110.0	110.0	96.0	52.0	46.0	0	0	0	19.7	28.0	85.5	85.1	632.3
1965	185.5	151.0	259.0	35.0	0	0	0	0	*14.0	39.0	107.0	206.0	996.5
1966	*149.0	*146.0	*118.0	*10.0	*45.0	*0	0	11.0	58.7	128.4	128.3	173.1	967.5
1967	97.7												
TOTAL	1,783.4	1,525.2	1,384.8	476.7	197.4	22.5	6.9	48.5	251.3	514.0	859.1	1,279.6	8,349.4
AVERAGE	198.2	169.5	142.8	53.0	21.9	2.5	0.8	5.4	27.9	57,1	95.5	142.2	927.2

PRECIPITATION 11 STATION ORURILLO CATCHMENT AREA _____ sq·km _____

_____ RIVER, IN THE BASIN OF _____ ELEVATION 3,940 m UNIT mm S 14 ° 44' W 70 ° 32'

YEAR	JAN.	FEB.	MAR.	APR.	MAY	JUNE	JULY	AUG.	SEPT.	OCT.	NOV.	DEC.	ANNUAL
1966													
1967	53.5	118.5						0	29.2	63.3	87.6	97.5	

PRECIPITATION 12 STATION AZANGARO CATCHMENT AREA ____ sq.km

RIVER, IN THE BASIN OF ____ ELEVATION 3,860 m UNIT mm S 14 ° 54' W 70 ° 11'

YEAR	JAN.	FEB.	MAR.	APR.	MAY	JUNE	JULY	AUG.	SEPT.	OCT.	NOV.	DEC.	ANNUAL
1956				0	3.3	0	0	0	37.0	23.4	44.5	167.0	-
1957	116.8	80.4	76.4	84.3	0	6.0	0	3.9	22.7	58.9	85.9	74.9	610.2
1958	148.9	124.4	113.2	43.3	25.7	0	6.7	21.5	36.3	42.5	140.3	91.0	793.8
1959	94.9	134.8	188.1	56.7	30.3	3.1	0	2.6	31.9	60.5	39.8	155.6	798.3
1960	292.6	100.8	81.4	54.7	11.3	1.1	0	7.0	56.8	58.4	96.1	44.6	804.8
1961	132.6	95.9	125.2	73.7	29.9	0	0	5.6	31.1	23.9	44.3	106.7	668.9
1962	118.4	153.6	125.9	54.7	2.4	0	0	0	23.9	32.8	22.4	197.4	731.5
1963	k73.6	143.9	57.7	37.9	10.9	0	0	1.7	44.8	78.4	35.1	120.2	704.2
1964	53.9	59.3	128.6	80.3	15.2	0	0	0.1	41.8	34.8	53.7	76.6	544.3
1965	106.6	88.6	147.9	33.6	1.6	0	0.9	0.2	22.1	20.6	55.4	154.9	632.4
1966	99.8	108.1	69.3	16.9	48.0	0	0	0.5	34.8	46.9	81.5	109.0	614.8
1967	49.7												-
TOTAL	1,338.1	1,089.8	1,113.7	536.1	175.3	10.2	7.6	43.1	346.2	457.7	654.5	1,130.9	6,903.2
AVERAGE	133.8	109.0	111.4	53.6	17.5	1.0	0.8	4.3	34.6	45.8	65.5	113.1	690.3

PRECIPITATION 13 STATION PUNTINA CATCHMENT AREA _____ sq·km

RIVER, IN THE BASIN OF _____ ELEVATION 3,920 m UNIT _____ S 14 • 54' W 69 • 53'

YEAR	JAN.	FEB.	MAR.	APR.	MAY	JUNE	JULY	AUG.	SEPT.	OCT.	NOV.	DEC.	ANNUAL
1956					9.0	3.0	1.5	3.0	48.5	29.1	25.0	-	-
1957	119.5	173.5	82.5	74.5	72.0	15.0	0	5.0	8.5	56.5	50.5	189.5	847.0
1958	100.0	109.5	105.5	34.0	42.0	0	0.3	14.5	62.5	57.5	41.0	-	-
1959	113.0	125.5	220.5	87.5	-	7.0	0	1.5	8.5	57.5	77.0	128.5	826.5
1960	201.0	81.0	69.5	14.0	29.0	0	0	11.5	49.0	52.5	221.5	45.5	774.5
1961	141.5	84.5	91.0	63.5	59.5	0	0	1.0	21.0	18.0	56.0	137.0	673.0
1962	229.5	114.0	132.5	23.0	6.5	0	0.5	0.5	79.5	17.0	49.0	180.5	832.5
1963	185.5	92.5	36.5	25.0	4.0	0	0	1.0	46.0	55.0	61.0	40.5	547.0
1964	67.5	71.0	111.0	72.5	17.5	0	0	1.0	16.0	47.0	80.0	92.5	576.0
1965	194.5	93.5	161.0	39.5	0	0	0	0.5	23.0	21.5	100.2	163.3	797.0
1966	66.5	151.1	66.4	32.2	41.9	0	0	0	26.0	43.4	95.5	48.2	571.2
1967	41.2												-
TOTAL	1,459.7	1,096.1	1,076.4	465.7	281.4	25.0	2.3	39.5	388.5	455.0	1,856.7	1,025.5	7,171.8
AVERAGE	132.7	99.6	97.9	42.3	25.6	2.3	0.2	3.6	35.4	41.4	78.0	93.2	652.2

PRECIPITATION 14 STATION PUCARA CATCHMENT AREA _____ sq·km

RIVER, IN THE BASIN OF _____ ELEVATION 3,910 m UNIT mm S 15° 03' W 70 ° 22'

YEAR	JAN.	FEB.	MAR.	APR.	MAY	JUNE	JULY	AUG.	SEPT.	OCT.	NOV.	DEC.	ANNUAL
1963										64.7	92.1	160.3	
1964	50.4	61.2	155.2	45.0	8.7	0	0	2.5	31.8	27.5	40.1	88.8	511.2
1965	145.7	62.3	151.9	45.6	0	0	0	0	11.2	94.8	55.5	232.5	799.5
1966	57.8	149.2	134.6	2.3	22.0	0	0	0	0.1	87.4	62.2	91.7	561.8
1967	60.5	106.9											
TOTAL	253.9	272.7	441.7	92.9	30.7	0	0	2.5	43.1	209.7	157.8	413.0	1,918.0
AVERAGE	84.6	90.9	147.2	31.0	10.2	0	0	0.8	14.4	69.9	52.6	137.7	639.3

PRECIPITATION 15 STATION LAMPA CATCHMENT AREA ____ sq·km

RIVER. IN THE BASIN OF ____ ELEVATION 3,956 m UNIT mm S 15°21' W 70 ° 23'

YEAR	JAN.	FEB.	MAR.	APR.	MAY	JUNE	JULY	AUG.	SEPT.	OCT.	NOV.	DEC.	ANNUAL
1956				10.0	66.0	1.0	7.0	0.5	3.6	7.1	58.5	121.8	
1957	64.3	166.5	81.1	44.5	1.0	26.5	0	4.0	4.0	59.5	92.3	88.3	632.0
1958	116.0	131.0	129.9	23.0	19.0	0	1.0	0.1	15.7	51.0	84.0	58.0	628.7
1959	105.0	101.0	189.5	164.0	31.5	58.0	2.2	0.1	18.0	16.5	7.0	98.9	791.7
1960	136.5	59.0	24.3	43.0	0.1	0	0	25.5	66.5	92.5	154.0	65.0	666.4
1961	74.0	128.5	222.5	44.5	30.0	0	0	0	46.0	104.5	132.5	183.5	966.0
1962	138.5	248.5	147.5	10.0	0	0	0.1	7.0	67.0	0	20.8	292.5	931.1
1963	209.3	180.7	162.5	0	0	0	0	0	156.0	143.0	35.2	175.5	1,061.9
1964	51.4	125.8	135.5	27.7	18.5	0	0	0	14.5	20.5	*43.0	*97.9	533.9
1965	*160.0	*68.0	*168.0	*45.0	*0	0	1.4	2.7	18.2	22.7	58.8	223.2	768.0
1966	96.4	206.3	102.3	23.3	79.6	0	0	0	39.5	51.5	100.0	138.4	837.3
1967	98.5												
TOTAL	1,151.4	1,415.3	1,363.1	425.0	179.7	84.5	4.7	39.4	445.4	561.7	726.8	1,420.3	7,817.3
AVERAGE	115.1	141.5	136.3	42.5	18.0	8.5	0.5	3.9	44.5	56.2	72.7	142.0	781.7

* Estimated value from correlation between Pucara precipitation and Lampa precipitation.

PRECIPITATION 16 STATION CUENCA RIO VERDE CATCHMENT AREA _____ sq·km _____

_____ RIVER, IN THE BASIN OF _____ ELEVATION 4,260 m UNIT mm S 15° 29' W 70 °49'

YEAR	JAN.	FEB.	MAR.	APR.	MAY	JUNE	JULY	AUG.	SEPT.	OCT.	NOV.	DEC.	ANNUAL
1962	229.4	138.0	159.6	25.7	3.7	0	0	0	52.2	47.7	17.8	203.8	877.9
1963	222.1	184.7	119.7	76.0	26.6	0	0	0.4	16.8	102.2	34.2	198.9	981.6
1964	40.9	126.1	152.0	35.4	29.0	0	0	4.5	6.1	82.0	45.7	72.0	593.7
1965	124.1	163.1	123.1	43.4	5.4	0.5	4.9	0	22.4	25.1	87.7	*87.0	686.7
1966	89.4	178.5	63.5	13.0	40.0	0	0	0	3.7	98.7	103.2	103.4	693.8
1967	77.2												
TOTAL	705.9	790.4	617.9	193.5	104.7	0.5	4.9	4.9	101.2	355.7	288.6	665.1	3,833.7
AVERAGE	141.1	158.1	123.6	38.7	20.9	0.1	0.1	0.1	20.2	71.1	57.7	133.0	766.7

* Estimated value from correlation between Cuenca Lagunillas precipitation and Cuenca Rio Verde precipitation.

PRECIPITATION 17 STATION CUENCA LAGUNILLAS CATCHMENT AREA sq·km

RIVER, IN THE BASIN OF ELEVATION 4,280 m UNIT mm S 15 ° 35' W 70 ° 09'

YEAR	JAN.	FEB.	MAR.	APR.	MAY	JUNE	JUL.	AUG.	SEPT.	OCT.	NOV.	DEC.	ANNUAL
1961												155.9	
1962	201.1	198.1	116.2	33.8	0	*0	0	0	42.6	15.9	17.1	163.4	788.2
1963	220.8	227.5	134.8	100.7	36.2	0	*0	1.0	25.3	28.6	31.0	162.9	968.8
1964	48.6	148.7	94.4	54.7	13.9	0	*0	2.3	2.7	4.6	28.8	75.7	474.4
1965	73.8	146.0	118.9	44.0	22.6	0	3.9	*0	8.1	5.8	23.1	78.4	524.6
1966	78.9	169.6	97.0	40.8	-	0	0	0	1.4	5.2	71.1	82.9	579.9
TOTAL	623.2	889.9	561.3	274.0	105.7	0	3.9	3.3	80.1	60.1	171.1	563.3	3,335.9
AVERAGE	124.6	178.0	112.3	54.8	21.1	0	0.8	0.7	16.0	12.0	34.2	112.7	657.2

* Estimated value from correlation between Cuenca Lagunillas precipitation and Cuenca Rio Verde precipitation.

PRECIPITATION 18 STATION SANTA LUCIA CATCHMENT AREA sq·km

RIVER. IN THE BASIN OF ELEVATION 4,080 m UNIT mm S 15 °41' W 70 ° 36'

YEAR	JAN.	FEB.	MAR.	APR.	MAY	JUNE	JULY	AUG.	SEPT.	OCT.	NOV.	DEC.	ANNUAL
1956										20.0	27.0	-	
1957	-	-	-	-	10.0	0	0	0	8.0	20.0	27.0	41.0	
1958	63.0	114.0	116.1	24.5	19.4	23.2	30.0	0	7.9	0	15.4	108.5	522.0
1959	123.3	108.2	83.8	46.4	18.3	0	0	0	5.0	39.2	59.7	37.0	520.9
1960	72.0	89.0	170.0	43.0	13.0	0	0	0	7.5	11.0	34.0	202.0	641.5
1961	208.2	101.0	77.0	38.0	2.0	0	0	0	61.0	18.0	103.6	45.2	654.0
1962	59.6	153.6	156.5	80.0	47.0	0	0	0	9.0	20.0	55.0	37.0	617.7
1963	100.9	129.8	62.4	-	-	-	-	-	-	-	-	-	293.1
1964	*102.0	*42.0	*42.0	*40.0	*23.0	*0	*0	*0	*12.0	*20.0	*53.0	*56.0	400.0
1965	*11.0	*38.0	*49.0	*51.0	*0	*0	*0	*0	*9.0	*0	*12.0	*108.0	278.0
1966	57.6	167.4	106.4	11.6	52.2	0	0	0	6.2	114.6	103.6	130.8	750.4
TOTAL	696.7	813.2	800.8	334.5	174.9	23.2	30.0	0	117.6	222.8	436.3	734.5	4,384.5
AVERAGE	87.1	101.7	100.8	41.8	21.9	2.9	3.8	0	14.7	27.9	54.5	91.8	548.1

* Estimated value from correlation between Toroya precipitation and Santa Lucia precipitation.

PRECIPITATION 19 STATION TOROYA CATCHMENT AREA sq·km

RIVER. IN THE BASIN OF ELEVATION 4,280 m UNIT mm S 15° 40' W 70 ° 30'

YEAR	JAN.	FEB.	MAR.	APR.	MAY	JUNE	JULY	AUG.	SEPT.	OCT.	NOV.	DEC.	ANNUAL
1963											5.1	96.7	
1964	110.8	43.9	44.0	41.5	27.0	0	0	0	10.2	19.3	55.9	71.4	424.0
1965	8.8	40.2	51.8	52.7	0	0	0	0	6.8	0	10.0	118.4	288.7
1966	66.4	145.4	55.2	2.3	121.8	0	0	0	0.8	128.3	51.5	62.3	634.0
1967	74.2	138.1											
TOTAL	186.0	229.5	151.0	96.5	148.8	0	0	0	17.8	147.6	117.4	252.1	1,346.7
AVERAGE	62.0	76.5	32.2	32.2	49.9	0	0	0	5.9	49.2	39.1	84.0	448.9

PRECIPITATION 20 STATION METEROLOGICO DE LAGUNILLAS CATCHMENT AREA _____ sq·km

_____ RIVER, IN THE BASIN OF _____ ELEVATION 4,200 m UNIT mm S 15 ° 46' W 70 ° 40'

YEAR	JAN.	FEB.	MAR.	APR.	MAY	JUNE	JULY	AUG.	SEPT.	OCT.	NOV.	DEC.	ANNUAL
1961												177.0	
1962	203.8	140.0	118.9	47.6	0	0	0	0	38.3	24.7	3.8	153.6	730.7
1963	161.9	202.5	180.3	90.8	9.8	0	0	0.6	15.2	27.3	41.5	4.2	734.1
1964	46.1	142.4	90.7	46.2	22.4	0	0	4.5	4.6	3.0	37.1	50.3	447.3
1965	134.8	131.5	81.6	30.5	0.7	0.6	2.2	1.1	8.3	2.3	8.8	146.7	549.1
1966	36.6	134.2	59.7	5.8	37.5	0	0	0	6.3	76.4	71.5	75.9	503.9
1967	84.5												
TOTAL	583.2	750.6	531.2	220.9	70.4	0.6	2.2	6.2	72.7	133.7	162.7	430.7	2,965.1
AVERAGE	116.6	150.1	106.4	44.2	14.1	0.1	0.4	1.2	14.5	26.7	32.5	86.1	593.0

PRECIPITATION 21 STATION COJATA CATCHMENT AREA sq·km

RIVER, IN THE BASIN OF ELEVATION 4,380 m UNIT mm S 15°01' W 69 °23'

YEAR	JAN.	FEB.	MAR.	APR.	MAY	JUNE	JULY	AUG.	SEPT.	OCT.	NOV.	DEC.	ANNUAL
1956					0	4.5	13.9	-	30.6	32.4	42.6	86.6	
1957	123.7	139.2	43.0	75.2	-	20.4	0	0.9	8.1	71.8	57.1	123.9	663.3
1958	97.0	94.5	84.4	73.8	52.0	0	18.9	20.4	13.8	74.3	59.8	57.9	646.8
1959	93.2	83.9	104.7	105.3	43.0	23.5	1.0	11.5	25.7	56.9	55.8	105.4	709.9
1960	153.1	90.0	67.1	63.1	34.1	3.1	5.6	31.1	67.7	52.1	126.3	59.0	752.3
1961	143.3	114.2	130.2	74.2	63.9	1.3	0	11.1	56.8	46.1	124.7	144.6	910.4
1962	147.7	88.1	171.3	52.6	27.1	5.1	15.3	0	130.7	86.3	39.0	203.1	966.3
1963	155.2	109.2	138.5	152.4	18.8	4.8	4.5	31.9	103.6	119.5	103.6	202.3	1,144.3
1964	92.3	356.2	235.3	41.3	31.0	0.4	7.5	3.4	37.0	69.8	64.7	47.7	986.6
1965	226.0	194.1	249.7	65.7	37.5	9.0	0	7.4	88.4	47.9	41.3	174.9	1,141.9
1966	100.8	155.1	50.7	14.0	42.5	0	0	0	22.3	28.2	29.4	109.5	552.5
1967	34.8												
TOTAL	1,332.3	1,424.5	1,274.7	717.6	349.9	67.6	52.8	117.7	554.1	652.9	701.7	1,228.3	8,474.3
AVERAGE	133.2	142.5	127.5	71.8	35.0	6.8	5.3	11.8	55.4	65.3	70.2	122.8	847.4

PRECIPITATION 22 STATION HYRAYA - MOHO CATCHMENT AREA _____ sq·km

RIVER, IN THE BASIN OF _____ ELEVATION 3,890 m UNIT mm. S 15° 21' W 69 ° 30'

YEAR	JAN.	FEB.	MAR.	APR.	MAY	JUNE	JULY	AUG.	SEPT.	OCT.	NOV.	DEC.	ANNUAL
1956				5.9	9.5	1.0	0	3.0	39.5	29.0	44.7	104.5	
1957	210.3	132.2	119.0	93.5	33.9	7.5	0	15.0	35.5	93.0	74.0	158.5	972.4
1958	175.4	165.5	162.3	38.1	46.3	0	8.6	20.7	19.5	41.9	92.5	74.1	844.9
1959	180.4	216.5	178.0	126.1	64.9	20.2	0	0	28.8	47.9	86.4	119.6	1,068.8
1960	314.3	184.2	85.1	*76.0	15.9	2.0	0	19.4	*134.0	*69.0	145.3	73.1	1,118.2
1961	227.0	139.3	62.3	113.4	60.3	1.7	0	29.3	103.4	*39.0	65.0	216.9	1,057.6
1962	259.9	114.1	124.2	93.7	8.3	0	0.4	1.9	62.9	*42.0	58.5	286.0	1,056.9
1963	347.2	189.5	110.3	98.7	10.1	0	0	10.8	83.9	68.5	28.6	174.5	1,122.1
1964	88.7	212.3	229.5	42.6	54.7	0	0	1.8	27.4	*3.0	53.0	101.4	814.4
1965	282.2	109.3	103.5	40.8	4.2	0.8	7.7	0.7	30.0	48.7	*106.0	185.1	919.0
1966	156.8	121.2	151.6	38.1	*103.0	0	0	0.5	10.7	37.6	72.4	112.3	804.2
1967	17.8												
TOTAL	2,242.2	1,584.1	1,325.8	761.0	401.6	32.2	16.7	100.1	536.1	495.6	781.7	1,501.5	9,778.5
AVERAGE	224.2	158.4	132.6	76.1	40.2	3.2	1.7	10.0	53.6	49.6	78.2	150.2	977.9

* Estimated value from correlation between Isla Sato precipitation and Moho precipitation.

PRECIPITATION 23 STATION ISLA SATO CATCHMENT AREA sq·km

RIVER, IN THE BASIN OF ELEVATION 3,850 m UNIT mm S 15°33' W 69 ° 30'

YEAR	JAN.	FEB.	MAR.	APR.	MAY	JUNE	JULY	AUG.	SEPT.	OCT.	NOV.	DEC.	ANNUAL
1956					0	0	0	0	3.5	3.1	-	77.0	
1957	161.6	48.0	168.8	21.0	0	8.0	5.6	12.0	10.2	61.2	71.1	229.5	799.0
1958	173.4	219.6	130.5	70.8	42.2	0	19.2	0	52.7	71.6	84.9	75.6	940.5
1959	153.3	121.9	265.6	160.8	150.3	10.2	9.1	12.0	26.0	32.3	42.0	265.6	1,249.1
1960	398.5	164.6	91.6	80.4	41.8	10.4	0	34.8	142.7	71.7	175.0	119.9	1,331.4
1961	148.1	158.6	112.0	200.9	107.8	0	0	18.6	10.2	39.4	75.7	259.5	1,130.8
1962	171.5	220.2	244.2	97.7	0	0	0	0	40.6	47.1	64.1	288.0	1,173.4
1963	273.1	230.2	187.4	127.6	29.0	0	0	11.4	110.1	84.5	*30.0	263.2	1,346.5
1964	*93.0	323.6	286.4	76.0	41.5	0	0	0	85.0	0	53.3	139.6	1,098.4
1965	305.4	210.7	127.2	58.9	32.6	0	0	*2.0	33.9	20.9	113.0	133.8	1,038.4
1966	161.9	239.3	85.4	52.8	109.0	0	0	0	24.7	50.7	91.7	191.0	1,006.5
1967	78.5												
TOTAL	2,039.8	1,936.7	1,699.1	946.9	554.2	28.6	33.9	90.8	536.1	479.4	800.8	1,965.7	11,112.0
AVERAGE	204.0	193.7	170.0	94.7	55.4	2.9	3.4	9.1	53.6	47.9	80.1	196.6	1,112.2

PRECIPITATION 24 STATION HUANCANE CATCHMENT AREA _____ sq·km

RIVER, IN THE BASIN OF _____ ELEVATION 3,860 m UNIT mm S 15° 21' W 60 ° 45'

YEAR	JAN.	FEB.	MAR.	APR.	MAY	JUNE	JULY	AUG.	SEPT.	OCT.	NOV.	DEC.	ANNUAL
1965	173.5	108.5	100.0	23.8	3.5	-	5.5	2.0	21.0	31.0	74.0	184.0	726.8
1966	91.0	123.0	123.0	16.5	75.8	-	-	-	11.6	37.5	63.2	84.4	625.2

PRECIPITATION 25 STATION TARACO CATCHMENT AREA sq·km

RIVER. IN THE BASIN OF ELEVATION 3,815 m UNIT mm S 15°18' W 69 ° 59'

YEAR	JAN.	FEB.	MAR.	APR.	MAY	JUNE	JULY	AUG.	SEPT.	OCT.	NOV.	DEC.	ANNUAL
1963									37.1	29.8	26.4	90.6	
1964	52.1	67.1	101.1	36.3	12.3	0	0	0	26.7	13.4	49.8	33.5	392.3
1965	128.3	100.1	133.6	40.2	4.4	0	0	0	21.9	15.9	49.6	121.4	615.4
1966	60.3	63.2	46.4	5.1	33.1	0	0	0	7.0	27.2	26.8	84.0	353.1
1967	34.9	118.9											
TOTAL	240.7	230.4	281.1	81.6	49.8	0	0	0	55.6	56.5	126.6	238.9	1,360.8
AVERAGE	80.2	76.8	93.7	27.2	16.6	0	0	0	18.5	18.8	42.1	79.6	458.6

PRECIPITATION 26 STATION CAPACHICA CATCHMENT AREA _____ sq.km

_____ RIVER, IN THE BASIN OF _____ ELEVATION 3,868 m UNIT mm. S 15° 38' W 69 ° 50'

YEAR	JAN.	FEB.	MAR.	APR.	MAY	JUNE	JULY	AUG.	SEPT.	OCT.	NOV.	DEC.	ANNUAL
1956				7.4	6.5	0	3.0	2.0	0	0	0	43.0	
1957	107.2	178.3	59.8	54.8	7.2	18.9	0	*2.0	*11.0	*48.0	30.4	91.2	608.8
1958	194.6	245.2	204.3	77.5	41.6	0	0	9.7	16.7	66.6	71.8	65.5	993.5
1959	56.0	131.3	167.7	109.9	36.1	3.5	0	0.3	13.0	33.1	21.3	196.5	768.7
1960	236.1	179.6	96.1	*90.0	*41.0	0	0	12.8	163.3	60.4	147.1	61.1	1,087.5
1961	149.9	159.1	94.4	119.2	41.1	0	0	4.6	58.5	103.9	103.9	188.3	1,022.9
1962	144.0	185.4	132.6	56.9	2.1	0	0	0	35.0	*16.0	69.5	251.9	893.4
1963	170.9	207.7	167.8	55.6	12.4	0	0	4.2	56.4	*86.0	34.5	168.7	964.2
1964	114.7	182.2	363.8	108.4	67.6	0	0	4.0	38.4	*6.0	103.4	117.8	1,106.3
1965	213.3	187.8	248.2	116.8	15.9	0	5.0	0	*41.0	24.4	39.7	190.4	1,082.5
1966	54.0	163.8	49.4	5.7	54.6	0	0.9	0	16.3	29.4	29.4	99.4	502.9
1967	49.2												
TOTAL	1,440.7	1,820.4	1,584.7	794.8	319.6	22.4	5.9	37.6	449.6	473.8	651.0	1,430.8	9,030.7
AVERAGE	144.1	182.0	158.5	79.5	32.0	2.2	0.6	3.8	45.0	47.4	65.1	143.1	903.1

* : Estimated value from correlation between Isla Taquillo precipitation and Capachica precipitation.

PRECIPITATION 27 STATION UMAYO CATCHMENT AREA sq·km

RIVER. IN THE BASIN OF ELEVATION 3,850 m UNIT mm. S 15 ° 43' W 70 °10'

YEAR	JAN.	FEB.	MAR.	APR.	MAY	JUNE	JULY	AUG.	SEPT.	OCT.	NOV.	DEC.	ANNUAL
1963									60.8	65.3	23.3	109.2	
1964	20.2	78.8	74.9	37.7	12.0	0	0	0	12.1	0	15.4	66.3	317.4
1965	105.7	133.5	107.9	51.4	0	0	0	0	19.7	10.5	34.4	114.5	577.6
1966	16.3	44.8	87.5	4.7	35.1	0	0	0	1.3	19.7	87.0	38.4	334.8
1967	85.8	46.8											
TOTAL	142.2	257.1	270.3	93.8	47.1	0	0	0	33.1	30.2	136.8	219.2	1,229.8
AVERAGE	47.4	85.7	90.1	31.3	15.7	0	0	0	11.0	10.1	45.6	73.1	409.9

PRECIPITATION 28 STATION MAÑAZO CATCHMENT AREA sq·km

RIVER, IN THE BASIN OF ELEVATION 3,920 m UNIT mm. S 15 ° 48' W 70 °21'

YEAR	JAN.	FEB.	MAR.	APR.	MAY	JUNE	JULY	AUG.	SEPT.	OCT.	NOV.	DEC.	ANNUAL
1956			79.0	15.0	13.0	0	3.0	12.3	14.2	18.4	-	41.4	
1957	76.3	137.3	75.5	32.4	3.9	-	0	0	6.4	28.2	44.8	134.8	-
1958	121.7	158.6	134.4	34.1	14.5	0	0	2.7	10.2	35.9	81.1	57.1	650.3
1959	84.0	125.9	239.8	68.5	9.3	0.8	0	3.6	11.6	3.9	36.1	261.1	844.6
1960	147.4	122.5	39.9	53.2	1.3	0	0	1.7	91.1	55.1	89.8	66.8	668.8
1961	133.1	130.4	114.6	45.1	49.0	7.2	0	9.3	21.3	13.7	80.1	149.2	753.0
1962	174.0	137.9	54.8	20.4	0	0	0	0	35.5	17.8	32.1	107.7	580.2
1963	149.1	147.8	75.1	56.9	4.0	0	0	7.3	15.1	58.9	29.2	75.9	619.3
1964	38.0	56.0	95.7	48.9	16.7	0	0	0.5	11.9	17.0	28.9	48.4	362,0
1965	84.8	56.3	44.3	17.1	170.2	0.2	1.0	0.9	7.2	3.2	13.7	124.4	523.3
1966	24.5	95.8	36.2	37.5	20.8	0	0	0	6.7	131.0	44.9	29.6	427.0
1967	27.1												
TOTAL	1,060.0	1,168.5	989.3	429.1	302.7	8.2	4.0	38.3	231.2	383.1	480.7	1,096.4	6,191.5
AVERAGE	96.4	116.9	90.0	39.0	27.5	0.8	0.3	3.5	21.0	34.8	48.1	99.7	578.0

PRECIPITATION 29 STATION ISLA TAQUILI CATCHMENT AREA _____ sq·km

RIVER, IN THE BASIN OF _____ ELEVATION 3,850 m UNIT mm. S 15° 46' W 69 ° 42'

YEAR	JAN.	FEB.	MAR.	APR.	MAY	JUNE	JULY	AUG.	SEPT.	OCT.	NOV.	DEC.	ANNUAL
1956					15.1	0	0	18.0	40.0	15.0	45.0	192.0	
1957	136.0	226.5	86.0	81.4	20.8	58.0	0	3.0	12.9	55.8	96.4	97.0	273.8
1958	251.0	169.1	137.2	71.6	41.8	0	12.4	11.3	63.3	104.5	103.9	109.0	1,075.1
1959	60.5	107.9	255.9	126.4	104.2	8.6	0	0	14.0	63.5	40.8	290.2	1,072.0
1960	310.9	219.9	198.2	103.6	36.8	0	0	20.1	247.8	82.9	112.5	84.5	1,417.2
1961	169.1	142.3	107.5	149.2	58.9	0	0	3.6	114.7	21.9	118.1	177.3	1,062.6
1962	211.9	96.2	216.3	83.2	20.2	0	0	0	75.5	20.2	40.7	273.5	1,037.7
1963	190.0	209.4	174.1	69.2	22.3	0	5.7	6.3	85.2	100.0	58.8	198.5	1,119.5
1964	208.7	148.2	272.7	94.0	67.8	0	0	0	56.1	6.7	85.4	48.9	988.5
1965	173.5	246.6	215.5	92.8	9.1	2.3	0	0	48.3	7.8	64.5	201.5	1,061.9
1966	69.4	181.7	115.9	44.5	96.7	0	0	0	21.6	35.5	101.2	130.8	797.3
1967	76.1												
TOTAL	1,781.0	1,747.8	1,779.3	915.9	478.6	68.9	18.1	44.3	739.4	498.8	822.3	1,611.2	10,505.6
AVERAGE	178.1	174.8	177.9	91.6	47.9	6.9	1.8	4.4	73.9	49.9	82.2	161.1	1,050.6

PRECIPITATION 31 STATION ESQUILACHE CATCHMENT AREA _____ sq·km _____

_____ RIVER. IN THE BASIN OF _____ ELEVATION 4,650 m UNIT mm S 16 ° 06' W 70 ° 17'

YEAR	JAN.	FEB.	MAR.	APR.	MAY	JUNE	JULY	AUG.	SEPT.	OCT.	NOV.	DEC.	ANNUAL
1963											34.5	155.9	
1964	62.9	128.8	146.1	-	26.7	0	0	2.0	4.0	5.8	32.9	47.0	
1965	78.5	119.5	92.5	23.0	2.0	0	5.0	0	14.0	-	-	-	

PRECIPITATION 32 STATION PICHACANI CATCHMENT AREA sq·km

RIVER. IN THE BASIN OF ELEVATION 4,180 m UNIT mm S 16 • 05' W 70 • 09'

YEAR	JAN.	FEB.	MAR.	APR.	MAY	JUNE	JULY	AUG.	SEPT.	OCT.	NOV.	DEC.	ANNUAL
1956			133.0	29.0	0	-	-	-	-	-	-	-	
1957	37.5	132.0	70.6	6.1	8.0	2.5	0	0	6.1	46.4	23.4	61.4	394.0
1958	166.8	119.8	123.1	13.3	17.4	0	4.3	12.2	15.3	139.6	99.2	34.8	745.8
1959	75.9	84.3	170.8	32.5	30.4	0.9	0	0	18.7	134.0	46.1	209.0	807.6
1960	217.5	89.9	74.2	53.6	1.5	0	0	9.3	72.8	40.8	121.3	29.7	710.6
1961	147.4	177.8	103.5	56.3	43.5	15 0	0	11.0	31.2	35.5	81.5	205.2	907.9
1962	166.5	151.0	95.8	71.2	2.0	0	0	0.9	57.5	19.0	86.0	104.5	754.4
1963	235.7	185.0	99.4	44.3	2.4	0	0.3	0.5	28.8	45.6	1.5	122.4	765.9
1964	-	-	-	-	12.0	0	0	1.1	61.7	31.7	24.8	34.4	
1965	70.6	82.1	62.4	38.4	4.0	2.0	4.6	8.1	30.9	41.3	46.1	193.9	584.4
1966	78.5	152.8	63.9	25.4	51.5	0	0	0	7.7	36.8	106.7	52.2	575.5
1967	89.2												
TOTAL	1,285.6	1,174.7	996.7	370.1	172.7	20.4	9.2	43.1	330.7	570.7	636.6	1,047.5	6,658.0
AVERAGE	128.6	140.5	96.7	37.0	15.7	2.0	0.9	4.3	33.1	57.1	63.7	104.8	684.4

PRECIPITATION 33 STATION JULI CATCHMENT AREA sq·km

RIVER, IN THE BASIN OF ELEVATION 3,852 m UNIT mm S 16 ° 21' W 69 ° 26'

YEAR	JAN.	FEB.	MAR.	APR.	MAY	JUNE	JULY	AUG.	SEPT.	OCT.	NOV.	DEC.	ANNUAL
1956				3.2	35.0	0	2.0	12.3	0	0	130.0	116.7	
1957	100.4	134.7	143.9	23.6	10.0	20.0	0	8.5	20.5	29.2	59.6	91.1	641.5
1958	225.1	128.8	184.8	35.5	0	0	*8.0	24.3	8.2	20.0	29.9	36.7	701.2
1959	82.8	*80.0	174.3	81.6	21.8	8.0	0	2.5	26.0	35.0	46.5	177.3	735.8
1960	208.8	119.5	24.0	46.0	9.0	23.0	13.0	14.0	87.0	*61.0	32.0	13.2	650.5
1961	15.0	84.4	85.8	14.3	58.1	*0	0	*2.0	80.1	*16.0	38.8	120.8	515.3
1962	82.7	88.3	191.4	89.0	0	*0	12.7	0	61.2	54.4	*30.0	356.8	966.5
1963	306.4	314.1	144.5	51.4	8.1	*0	*5.0	*5.0	*63.0	*74.0	*43.0	165.7	1,180.2
1964	*155.0	*110.0	*203.0	*69.0	*50.0	*0	*0	*0	*41.0	*5.0	*63.0	*36.0	732.0
1965	*129.0	*129.0	84.0	8.0	3.4	0	4.0	0	46.2	16.4	74.5	205.3	753.8
1966	64.5	95.6	52.4	27.5	-	0	0	0	13.0	58.9	66.9	98.6	548.4
1967	68.0												
TOTAL	1,369.7	1,338.1	1,288.1	445.9	231.4	51.0	42.9	56.3	446.3	369.9	484.1	1,301.5	7,425.2
AVERAGE	137.0	133.8	128.8	44.6	23.1	5.1	4.3	5.6	44.6	37.0	45.4	130.2	742.5

* : Estimated value from correlation between Isha Taquillo precipitation and Juli precipitation.

PRECIPITATION 34 STATION YUNGUYO CATCHMENT AREA _____ sq·km

_____ RIVER, IN THE BASIN OF _____ ELEVATION 3,850 m UNIT mm S 16° 14' W 69 °07'

YEAR	JAN.	FEB.	MAR.	APR.	MAY	JUNE	JULY	AUG.	SEPT.	OCT.	NOV.	DEC.	ANNUAL
1965	150.0	137.5	107.0	30.0	9.0	1.0	9.0	0	63.0	29.0	132.0	145.4	812.9
1966	87.0	171.0	70.5	31.6	35.5	0	1.0	0	18.5	50.0	53.0	74.0	592.1
TOTAL	237.0	308.5	177.5	61.6	44.5	1.0	10.0	0	81.5	79.0	185.0	219.4	1,405.0
AVERAGE	118.5	154.3	88.8	30.8	22.3	0.5	5.0	0	0	39.5	92.5	108.7	702.2

PRECIPITATION 35 STATION CHILLIGA CATCHMENT AREA ____ sq-km

RIVER. IN THE BASIN OF ____ ELEVATION 4,213 m UNIT mm. S 16 ° 31' W 69 ° 39'

YEAR	JAN.	FEB.	MAR.	APR.	MAY	JUNE	JULY	AUG.	SEPT.	OCT.	NOV.	DEC.	ANNUAL
1963									4.9	17.2	4.4	111.0	
1964	75.7	80.3	132.2	16.6	18.7	0	0	4.2	15.8	11.0	45.5	93.2	493.2
1965	118.7	67.3	54.6	10.5	1.2	5.2	5.4	3.1	29.7	7.4	10.4	146.7	460.2
1966	33.4	91.8	61.8	9.8	40.5	0	0	0	0.8	17.7	67.0	49.7	372.5
1967	104.7	127.2											
TOTAL	332.5	366.6	248.6	36.9	60.4	5.2	5.4	7.3	51.2	53.3	127.3	400.6	1,695.3
AVERAGE	83.1	91.5	82.9	12.3	20.1	1.4	1.5	2.4	17.1	17.8	42.4	133.5	506.0

PRECIPITATION 36 STATION MAZO CRUZ CATCHMENT AREA _____ sq·km

RIVER, IN THE BASIN OF _____ ELEVATION 4,370 m UNIT mm S 16° 45' W 69 ° 43'

YEAR	JAN.	FEB.	MAR.	APR.	MAY	JUNE	JULY	AUG.	SEPT.	OCT.	NOV.	DEC.	ANNUAL
1957					0	12.0	0	0	0	33.3	0	99.8	
1958	137.0	68.0	101.0	9.3	4.0	0	0	6.3	0	16.9	15.4	37.6	395.5
1959	43.8	103.8	91.9	38.3	1.3	0	0	0	12.4	13.1	15.7	148.6	468.9
1960	181.2	93.7	22.7	29.5	0	0	0	13.2	34.7	43.4	48.2	26.9	493.5
1961	113.2	103.6	43.0	0	23.6	0	0	6.7	16.3	30.1	44.2	145.0	525.1
1962	144.2	132.5	72.3	31.8	0	0	0	0	31.1	8.9	13.5	79.6	513.9
1963	211.9	227.5	125.1	48.9	25.7	0	0	4.0	26.7	21.5	37.5	71.3	800.1
1964	51.6	101.0	97.0	4.9	20.7	0	0	5.5	28.8	0	27.4	39.4	376.3
1965	85.8	85.7	24.1	34.6	0	0	0	9.8	25.0	6.3	10.7	100.5	382.5
1966	40.2	106.0	21.1	0	28.3	0	0	0	8.2	12.1	21.9	99.0	336.8
TOTAL	1,008.9	1,021.8	598.2	197.2	103.6	12.0	0	45.5	183.2	185.6	234.5	847.7	4,438.3
AVERAGE	112.1	113.5	66.5	21.9	10.4	1.2	0	4.6	18.3	18.6	23.5	84.8	475.4

PRECIPITATION 37 STATION CAPAZO CATCHMENT AREA sq·km

RIVER, IN THE BASIN OF ELEVATION 4,350 m UNIT mm S 17° 11' W 69° 44'

YEAR	JAN.	FEB.	MAR.	APR.	MAY	JUNE	JULY	AUG.	SEPT.	OCT.	NOV.	DEC.	ANNUAL
1963										56.4	49.1	122.7	
1964	63.3	101.1	38.8	14.2	10.0	0	0	0	0	10.3	22.7	39.0	299.4
1965	70.3	146.2	33.6	15.0	0	0	0	9.0	22.2	0	13.8	51.2	361.3
1966	6.8	128.0	0	19.9	0	0	0	0	0	0	36.3	54.9	302.2
1967	81.1	171.5											
TOTAL	221.5	546.8	128.7	29.2	29.9	0	0	9.0	22.2	66.7	121.9	267.8	1,443.7
AVERAGE	55.4	136.7	42.9	9.7	10.0	0	0	3.0	7.4	16.7	40.5	67.0	389.3

3. EXISTING RUNOFF DATA

DISCHARGE (1) STATION PTE. CARRETERA

HUANCANE RIVER, IN THE BASIN OF LA. TITICACA ELEVATION 3,805 UNIT cu.m.s. YEAR 1966

DATE	JAN.	FEB.	MAR.	APR.	MAY	JUNE	JULY	AUG.	SEPT.	OCT.	NOV.	DEC.	DATE
1	97.40	39.00	88.70	20.70	7.20	6.15							1
2	134.00	29.25	102.75	22.05	6.44	6.15							2
3	100.00	34.80	106.15	22.05	6.10	5.89							3
4	110.00	46.70	104.95	18.90	6.10	5.63							4
5	75.00	38.00	102.20	17.40	5.80	5.63							5
6	77.80	27.00	93.50	16.20	7.20	5.34							6
7	50.90	26.10	86.85	15.00	7.84	5.34							7
8	38.50	26.10	66.70	13.65	9.50	5.02							8
9	29.50	30.05	54.00	13.20	7.50	5.02							9
10	23.65	34.80	45.50	11.15	7.20	5.02							10
11	19.60	51.50	40.00	11.40	6.40	5.02							11
12	17.27	32.60	33.90	10.50	5.80	5.02							12
13	15.65	27.90	29.90	9.90	5.80	5.02							13
14	14.10	28.35	27.50	9.60	5.80	5.02							14
15	12.30	30.60	24.50	9.00	10.00	5.02							15
16	10.95	38.00	22.05	8.80	18.92	5.02							16
17	9.90	79.80	20.70	8.80	22.28	4.42							17
18	9.30	66.10	20.70	8.60	22.28	4.42							18
19	8.70	72.40	22.05	8.40	18.92	4.42							19
20	8.10	61.50	23.00	8.20	14.70	4.42							20
21	8.10	129.20	23.00	8.20	11.36	4.14							21
22	8.70	147.70	27.50	11.85	9.92	4.14							22
23	11.85	136.60	49.00	13.65	8.84	4.14							23
24	13.20	126.60	51.50	10.20	7.82	4.14							24
25	14.10	103.30	40.50	9.30	6.94	4.14							25
26	15.00	86.20	35.70	8.80	6.67	4.14							26
27	16.62	97.40	31.10	8.40	6.15	4.14							27
28	25.00	81.00	27.50	8.20	6.94	4.14							28
29	27.00	-	24.50	8.00	6.67	4.10							29
30	26.00	-	23.50	8.00	6.67	4.00							30
31	34.80	-	22.05	-	6.41	-							31
TOTAL	1,067.60	1,718.65	1,471.45	358.80	286.17	144.21							
AVERAGE	34.43	61.38	47.46	11.96	9.23	4.80							

Annual Total (cu.m.s.-day

DISCHARGE (1) STATION PTE. CARRETERA

HUANCANE RIVER, IN THE BASIN OF LA. TITICACA ELEVATION 3,805 UNIT cu.m.s. YEAR 1965

DATE	JAN.	FEB.	MAR.	APR.	MAY	JUNEZ	JULY	AUG.	SEPT.	OCT.	NOV.	DEC.	DATE
1	10.50	136.00	44.50	30.84	15.50	5.12	3.35	2.80	2.10	1.70	1.25	2.00	1
2	11.60	147.00	44.00	55.60	14.00	5.12	3.35	2.70	2.10	1.70	1.25	2.00	2
3	15.50	110.50	48.80	52.00	12.75	5.00	3.35	2.70	2.10	1.70	1.25	1.70	3
4	26.30	88.50	57.40	49.40	12.00	5.12	3.25	2.70	1.86	1.70	1.35	1.85	4
5	26.30	91.00	70.00	43.44	11.65	5.12	3.35	2.70	1.90	1.70	1.35	1.70	5
6	18.25	97.50	80.50	37.32	11.20	5.12	3.35	2.68	1.90	1.70	1.40	1.25	6
7	15.50	85.50	80.50	32.80	12.00	5.12	3.25	2.70	1.90	2.62	1.55	5.00	7
8	12.00	75.00	107.00	30.30	10.50	4.95	3.25	2.70	2.13	3.50	1.55	7.54	8
9	9.50	58.50	84.90	26.50	10.50	4.95	3.25	2.70	2.62	2.13	1.70	14.60	9
10	9.50	55.50	68.50	22.00	9.50	4.95	3.25	2.70	2.62	2.00	3.36	11.80	10
11	11.25	56.50	118.00	20.40	8.85	4.60	3.25	2.49	2.75	1.90	2.20	9.70	11
12	15.50	68.00	105.00	19.20	8.50	4.95	3.20	2.50	2.70	1.80	1.25	7.30	12
13	14.00	59.500	75.00	18.00	8.00	4.95	3.20	2.50	2.81	1.80	1.25	16.00	13
14	12.50	54.50	79.20	21.60	7.35	4.40	3.20	2.50	2.80	1.80	1.25	13.80	14
15	15.00	53.50	84.10	27.00	7.10	4.40	3.20	2.50	3.10	1.80	0.80	11.80	15
16	19.50	55.50	99.50	29.88	6.60	4.20	3.20	2.50	2.90	2.10	1.25	21.18	16
17	25.50	63.00	96.50	27.48	6.50	4.20	3.20	2.50	2.80	2.10	5.44	28.50	17
18	34.50	54.00	82.00	36.30	6.20	4.20	3.20	2.14	2.62	1.90	8.26	32.30	18
19	50.00	56.00	86.44	32.80	6.20	3.70	3.21	2.50	2.62	1.90	5.88	22.80	19
20	62.00	50.00	71.00	34.80	6.20	3.70	3.21	2.20	2.80	1.70	4.78	17.50	20
21	92.00	74.00	61.12	35.30	6.00	3.55	2.99	2.20	2.29	1.70	3.90	21.18	21
22	82.50	70.00	52.00	31.80	5.41	3.55	2.99	2.50	1.90	1.70	3.00	25.00	22
23	59.50	59.00	45.84	27.90	5.41	3.35	2.99	2.10	1.90	1.70	3.00	37.50	23
24	66.00	57.00	43.44	25.00	5.40	3.35	2.84	2.07	1.90	1.70	3.00	33.50	24
25	82.50	84.50	43.44	21.60	5.40	3.35	2.82	2.10	1.80	1.70	3.00	22.50	25
26	76.00	90.00	47.84	19.60	4.82	3.35	2.82	2.10	1.80	1.51	2.80	17.00	26
27	78.50	58.50	44.40	19.20	4.42	3.35	2.84	2.10	1.75	1.30	3.00	13.80	27
28	135.50	50.50	40.40	18.80	4.40	3.35	2.84	2.10	1.75	1.30	3.00	12.40	28
29	142.50	-	34.80	18.00	4.40	3.35	2.84	2.10	1.75	1.30	1.85	17.00	29
30	111.00	-	32.80	16.88	4.42	3.35	2.84	2.08	1.75	1.36	2.00	29.20	30
31	121.00	-	29.88	-	4.42	-	2.84	2.20	-	1.30	-	48.50	31
TOTAL	1,461.20	2,059.00	2,058.00	881.74	245.64	127.79	96.76	75.07	67.73	55.84	76.72	515.76	
AVERAGE	47.13	73.53	66.41	29.39	7.92	4.26	3.12	2.42	2.25	1.80	2.55	16.63	

Annual Total (cu.m.s.-day) 7,722.083

DISCHARGE (1) STATION PTE. CARRETERA

HUANCANE RIVER, IN THE BASIN OF LA. TITICACA ELEVATION 3,805 UNIT cu.m.s. YEAR 1964

DATE	JAN.	FEB.	MAR.	APR.	MAY	JUNE	JULY	AUG.	SEPT.	OCT.	NOV.	DEC.	DATE
1	10.75	46.60	23.32	7.92	16.46	6.28	4.34	3.00	2.13	1.94	1.30	2.50	1
2	10.00	46.60	25.52	67.30	14.92	7.40	4.08	3.00	2.13	1.94	1.45	2.32	2
3	7.60	54.94	25.52	58.60	13.78	7.40	3.82	3.12	1.94	1.94	1.30	1.94	3
4	7.60	54.33	49.60	48.37	13.78	7.12	3.82	3.12	1.94	2.00	1.60	1.94	4
5	7.60	48.37	21.04	41.60	12.12	3.12	3.82	3.12	1.94	1.94	1.60	1.75	5
6	7.40	44.60	75.00	36.40	11.48	6.84	4.08	3.12	1.94	2.50	1.45	1.60	6
7	7.12	49.55	77.80	31.20	11.16	6.84	4.08	3.12	2.13	2.90	1.94	1.60	7
8	7.68	44.10	61.24	29.28	10.52	5.72	3.82	3.12	2.32	2.70	2.13	1.60	8
9	10.20	46.60	48.96	28.80	10.20	6.28	3.82	3.12	2.13	2.50	1.94	1.60	9
10	14.54	44.60	52.50	28.80	9.92	6.28	3.56	3.12	1.94	2.13	1.94	1.60	10
11	28.32	42.60	51.91	25.52	9.36	6.00	3.56	3.12	2.13	1.75	2.13	1.60	11
12	36.40	48.96	41.60	28.16	9.08	6.00	3.56	3.12	2.13	1.60	2.32	1.94	12
13	30.24	66.60	34.32	21.52	8.80	5.72	2.30	2.90	2.13	1.60	1.94	3.75	13
14	25.52	74.30	32.24	20.08	8.52	5.72	3.56	2.90	2.13	1.60	1.94	5.25	14
15	23.32	71.50	30.72	18.64	7.96	5.72	3.56	2.70	2.13	1.60	1.75	7.78	15
16	17.68	61.90	34.32	17.20	7.68	5.72	3.30	2.70	2.13	1.60	1.60	9.05	16
17	14.16	57.99	83.28	17.20	7.68	5.44	3.30	2.35	1.94	1.60	1.60	7.00	17
18	12.44	66.60	117.80	16.44	7.96	4.60	3.30	2.35	1.94	1.60	1.60	6.12	18
19	10.20	66.60	87.44	15.68	9.64	4.60	3.30	2.35	1.94	1.45	1.45	6.12	19
20	9.08	68.70	97.52	15.68	9.36	4.60	3.56	2.35	1.94	1.45	1.45	7.25	20
21	7.96	90.32	108.00	22.80	8.80	4.60	3.56	2.35	2.32	1.45	1.50	9.89	21
22	7.12	77.80	109.40	29.76	8.52	4.60	3.56	2.35	2.32	1.30	1.50	6.95	22
23	7.96	56.16	150.00	27.36	8.80	4.60	3.30	2.35	1.75	1.30	1.60	6.55	23
24	9.92	43.60	53.70	22.88	8.80	4.60	3.30	2.32	1.75	3.10	1.60	7.78	24
25	20.56	32.76	81.24	21.04	9.08	4.60	3.30	2.32	1.60	3.10	1.60	9.05	25
26	19.60	31.72	72.20	20.56	9.08	4.60	3.30	2.32	1.60	1.75	1.50	13.10	26
27	17.20	28.32	61.90	21.04	8.80	4.34	3.30	2.32	1.60	1.60	1.50	11.00	27
28	19.60	25.52	58.60	20.56	8.52	4.34	3.30	2.32	1.94	1.30	1.75	9.35	28
29	19.60	23.38	90.32	22.00	7.96	4.60	3.04	2.32	1.94	1.30	2.13	7.78	29
30	22.00	-	128.06	19.12	7.96	4.60	2.78	2.32	1.94	1.20	2.70	7.52	30
31	25.20	-	101.92	-	7.96	-	2.78	2.13	-	1.30	-	9.05	31
TOTAL	474.57	1,515.61	2,096.99	872.87	304.64	166.88	109.08	83.22	59.84	57.04	51.81	172.13	
AVERAGE	15.31	52.26	67.32	29.10	9.83	5.56	3.52	2.68	1.99	1.84	1.72	5.55	

Annual Total (cu.m.s.-day 5,954.660

DISCHARGE (1) STATION PTE. CARRETERA

HUANCANE RIVER, IN THE BASIN OF LA, TITICACA ELEVATION 3,805 UNIT cu.m.s. YEAR 1963

DATE	JAN.	FEB.	MAR.	APR.	MAY	JUNE	JULY	AUG.	SEPT.	OCT.	NOV.	DEC.	DATE
1	55.50	183.40	64.20	57.00	25.35	9.40	6.40	4.00	2.80	4.00	6.00	3.00	1
2	48.60	179.80	65.60	46.00	22.05	9.40	6.40	3.85	2.95	3.70	6.80	4.45	2
3	34.20	133.40	61.40	37.80	21.00	9.00	6.20	3.85	3.10	3.55	6.80	4.45	3
4	28.20	118.45	57.00	34.80	19.50	8.80	6.20	6.70	3.25	3.40	6.60	6.13	4
5	33.00	106.20	47.95	41.80	18.50	8.60	6.00	3.70	3.40	3.25	6.00	8.28	5
6	37.20	103.50	45.30	36.60	18.50	8.40	6.00	3.70	3.55	3.25	5.40	6.70	6
7	47.30	99.75	48.60	33.00	17.50	8.00	6.00	3.70	3.70	3.40	5.00	6.30	7
8	60.00	84.75	42.50	34.20	15.80	8.20	5.60	3.70	4.00	3.40	4.80	7.62	8
9	65.60	90.00	41.80	36.00	15.10	8.00	5.60	3.55	4.40	3.40	4.80	8.50	9
10	69.80	96.00	36.60	33.60	15.10	8.00	5.60	3.55	4.00	3.25	4.40	14.40	10
11	64.20	84.00	37.80	33.00	14.75	8.00	5.60	3.55	3.85	4.00	3.85	12.65	11
12	99.00	77.50	37.80	28.20	14.40	8.00	5.60	3.40	3.55	5.60	3.55	8.50	12
13	128.20	74.00	31.80	33.00	14.40	7.60	5.60	3.40	3.40	4.60	3.40	7.40	13
14	107.10	72.60	29.40	54.00	14.05	7.60	5.60	3.40	3.40	5.20	3.25	7.62	14
15	129.10	77.50	27.00	52.50	13.70	7.40	5.40	3.25	3.40	5.20	3.10	7.62	15
16	157.70	66.30	27.00	51.20	13.35	7.20	5.20	3.25	3.40	5.20	2.95	8.28	16
17	145.70	103.50	30.00	75.40	13.35	7.20	5.20	3.40	4.20	5.40	2.80	9.75	17
18	107.10	121.00	29.40	84.00	13.00	7.00	5.20	3.40	5.40	4.60	2.80	10.00	18
19	94.50	111.60	30.60	58.50	13.00	7.20	5.20	3.40	6.60	4.40	2.65	9.50	19
20	83.25	92.25	36.60	41.10	12.40	7.20	5.00	3.55	5.80	4.60	2.50	8.50	20
21	88.50	84.75	58.50	35.40	11.80	7.20	5.00	3.40	6.40	4.60	2.50	9.25	21
22	82.50	97.50	57.00	35.40	11.20	7.20	4.80	3.40	5.60	6.60	2.80	8.50	22
23	84.00	87.00	57.75	33.00	10.60	7.20	4.40	3.40	5.00	6.00	3.40	7.15	23
24	68.40	85.50	61.40	30.60	10.60	6.80	4.40	3.40	4.40	5.00	3.40	5.95	24
25	76.80	94.50	52.50	28.20	10.30	6.80	4.40	3.40	4.00	4.40	3.00	5.28	25
26	107.10	85.50	43.20	27.60	10.00	6.60	4.20	3.25	4.00	4.00	2.80	4.77	26
27	81.00	74.00	40.40	28.80	10.00	6.60	4.20	3.40	4.00	4.00	2.65	4.60	27
28	102.75	71.20	41.80	36.60	9.80	6.60	4.20	3.10	4.20	4.00	2.80	6.74	28
29	97.50	-	72.60	37.20	9.60	6.40	4.20	3.10	4.00	3.40	2.65	9.75	29
30	140.30	-	82.50	31.20	9.40	6.40	4.00	2.95	4.00	10.60	2.65	10.50	30
31	168.75	-	65.60	-	9.20	-	4.00	2.80	-	9.20	-	11.85	31
TOTAL	2,692.85	2,755.45	1,461.60	1,225.70	437.30	228.00	161.40	106.90	123.75	149.20	116.10	243.59	
AVERAGE	86.87	98.41	47.15	40.86	14.11	7.60	5.21	3.45	4.13	4.81	3.87	7.86	

Annual Total (cu.m.s.-day) 9,701.840

DISCHARGE (1) STATION PTE. CARRETERA

HUANCANE RIVER, IN THE BASIN OF LA. TITICACA ELEVATION 3,805 UNIT cu.m.s YEAR 1962

DATE	JAN.	FEB.	MAR.	APR.	MAY	JUNE	JULY	AUG.	SEPT.	OCT.	NOV.	DEC.	DATE
1	10.00	34.20	61.50	59.10	17.75	6.80	4.25	3.25	3.50	4.40	4.00	3.00	1
2	112.00	35.40	61.50	55.50	16.85	6.20	4.50	3.50	3.80	4.20	4.20	2.90	2
3	93.00	32.60	70.80	55.50	15.50	6.20	4.50	3.00	4.10	3.82	4.00	3.50	3
4	75.10	57.90	69.70	49.00	15.50	6.50	4.50	3.00	4.50	3.70	4.00	3.20	4
5	81.30	90.40	74.40	46.00	15.50	6.80	4.50	2.75	4.80	3.40	4.00	3.80	5
6	87.80	75.80	62.70	42.60	15.50	6.80	4.50	2.50	5.10	3.40	4.00	4.00	6
7	122.50	77.20	57.90	42.60	14.80	6.80	4.25	2.50	4.80	3.00	3.55	4.20	7
8	109.00	107.50	15.20	41.40	14.10	6.80	4.25	2.50	4.30	3.00	3.80	4.20	8
9	81.95	74.40	60.90	35.40	13.75	6.80	4.25	2.50	4.00	2.70	3.75	4.50	9
10	81.95	62.70	131.60	34.20	13.40	6.80	4.00	2.50	3.50	2.70	4.00	8.70	10
11	70.80	46.00	130.00	31.40	12.70	6.80	4.00	2.50	3.50	2.50	4.00	15.00	11
12	54.40	39.00	122.50	28.00	12.70	6.80	3.75	2.50	3.50	2.50	4.00	11.50	12
13	51.10	33.00	146.00	26.00	13.05	6.80	3.75	2.50	3.75	2.40	3.20	12.50	13
14	64.50	31.40	154.00	25.50	12.70	6.80	3.75	2.50	4.00	2.30	3.07	21.50	14
15	62.70	33.00	180.00	28.00	13.40	6.80	3.50	2.50	3.90	2.30	4.00	30.90	15
16	81.30	29.80	174.00	35.40	12.70	6.80	3.50	2.50	3.90	2.30	8.00	25.80	16
17	104.00	26.00	170.00	36.00	12.70	6.80	3.50	2.50	3.95	2.10	7.00	38.00	17
18	65.10	23.20	182.20	30.60	12.70	4.50	3.50	2.50	4.30	2.00	9.00	37.00	18
19	45.00	24.00	191.00	28.50	12.70	4.50	3.50	2.50	3.90	3.80	8.10	26.20	19
20	35.40	28.00	122.50	30.20	12.70	4.50	3.75	2.50	3.75	3.80	8.00	25.80	20
21	31.00	34.20	107.50	31.40	13.40	4.50	3.75	2.50	3.50	4.40	6.30	31.60	21
22	29.80	42.60	80.00	26.00	13.40	4.50	3.50	2.50	3.50	3.80	5.50	54.50	22
23	29.40	34.20	59.10	24.00	13.40	4.50	3.75	2.50	3.75	3.80	5.10	69.00	23
24	31.00	43.80	57.90	23.60	13.75	4.50	3.75	2.50	3.50	3.50	4.75	60.00	24
25	32.20	144.25	59.10	23.60	14.10	4.50	3.75	2.50	3.50	3.40	3.77	65.50	25
26	39.60	89.10	61.50	22.40	14.80	4.50	3.50	2.50	4.50	3.00	3.77	118.00	26
27	39.00	74.40	74.40	21.60	14.80	4.50	3.50	2.50	6.00	3.00	3.77	121.80	27
28	36.00	71.90	87.80	21.20	14.80	4.50	3.50	2.50	6.90	3.00	3.77	76.50	28
29	37.80	-	82.60	20.80	6.80	4.50	3.50	2.50	5.10	2.70	3.50	71.50	29
30	39.00	-	70.80	19.55	6.80	4.50	3.50	2.50	4.30	2.40	3.50	60.10	30
31	38.40	-	61.50	-	6.80	-	3.50	2.50	-	2.20	-	63.90	31
TOTAL	1,942.10	1,495.95	3,110.60	995.05	413.55	172.60	119.50	80.25	125.10	95.12	141.40	1,078.50	
AVERAGE	62.65	48.26	100.34	33.17	13.34	5.75	3.86	2.59	4.17	3.07	4.71	34.79	

Annual Total (cu.m.s-day) 9,769.720

DISCHARGE (1) STATION PTE. CARRETERA

HUANCANE RIVER, IN THE BASIN OF LA. TITICACA ELEVATION 3,805 UNIT cu.m.s. YEAR 1961

DATE	JAN.	FEB.	MAR.	APR.	MAY	JUNE	JULY	AUG.	SEPT.	OCT.	NOV.	DEC.	DATE
1	7.40	59.20	70.60	22.00	12.60	8.00	4.30	2.99	2.48	2.66	1.56	3.90	1
2	11.00	47.20	68.80	21.40	12.20	8.00	4.30	2.99	2.48	2.48	1.44	3.50	2
3	11.80	37.00	85.00	19.00	11.80	7.70	4.30	2.99	2.48	2.48	1.44	3.16	3
4	12.60	33.20	72.40	17.80	11.40	7.40	4.30	2.99	2.31	2.14	1.44	2.82	4
5	11.80	40.00	72.40	15.80	10.40	7.25	4.30	2.82	2.31	1.96	1.44	2.82	5
6	13.00	40.00	82.00	15.00	10.10	7.00	4.30	2.82	2.31	1.97	1.56	2.99	6
7	13.40	64.00	77.20	14.20	9.80	7.00	4.30	2.99	2.31	1.97	1.44	2.48	7
8	27.40	66.40	76.00	14.20	9.80	6.50	4.30	2.99	2.31	1.80	1.56	2.48	8
9	28.20	70.00	67.00	15.40	10.40	6.50	4.30	2.82	2.31	1.68	1.56	2.31	9
10	21.40	79.60	56.00	13.80	11.80	6.25	4.30	2.82	2.14	1.68	1.68	2.48	10
11	20.30	76.00	64.00	13.00	14.60	6.00	4.30	2.82	2.14	1.56	1.97	2.64	11
12	16.60	60.80	88.00	13.00	17.40	5.75	4.10	2.82	2.14	1.56	1.97	6.00	12
13	13.40	47.20	64.00	23.80	17.80	5.50	4.10	2.82	2.14	1.56	1.80	7.75	13
14	11.00	48.40	51.40	46.00	19.00	5.30	4.10	2.65	2.14	1.44	1.80	8.00	14
15	9.80	47.80	44.80	42.40	17.80	5.30	3.90	2.65	2.48	1.44	2.31	13.10	15
16	9.20	43.60	43.60	37.50	15.00	5.30	3.90	2.65	2.65	1.97	2.31	11.60	16
17	8.60	35.50	37.50	70.00	15.00	5.30	3.70	2.82	2.48	1.97	2.31	11.60	17
18	8.30	31.40	39.00	67.60	14.60	5.10	3.50	2.82	2.31	1.14	2.48	9.20	18
19	9.20	28.60	38.50	62.40	15.40	5.10	3.50	2.82	2.99	3.16	2.82	10.10	19
20	9.20	28.20	38.00	50.80	14.20	5.10	3.50	2.82	3.33	1.97	2.99	12.80	20
21	9.20	35.00	30.80	39.00	15.40	4.90	3.50	2.82	2.65	1.68	2.65	17.50	21
22	9.20	46.00	29.60	29.00	18.20	4.90	3.50	2.82	2.48	1.56	2.48	28.00	22
23	9.20	82.00	27.00	19.00	18.20	4.90	3.33	2.82	2.31	2.31	2.48	27.50	23
24	8.30	56.00	25.40	25.00	16.60	4.90	3.50	2.82	2.14	1.68	3.16	23.00	24
25	8.60	55.20	22.60	20.20	14.60	4.70	3.50	2.82	2.31	1.56	3.50	70.00	25
26	25.00	54.40	20.80	18.60	12.60	4.70	3.33	2.82	2.31	1.44	3.90	39.50	26
27	30.20	56.00	20.20	18.20	11.40	4.70	3.33	2.65	2.65	1.44	4.10	37.00	27
28	66.40	70.00	23.80	17.00	10.40	4.70	3.33	2.82	2.65	1.32	3.70	31.40	28
29	96.40	-	21.40	15.80	9.20	4.70	3.33	2.65	2.82	1.32	4.30	33.80	29
30	85.60	-	22.60	15.00	8.60	4.70	3.33	2.48	2.65	1.56	4.30	46.60	30
31	74.80	-	22.00	-	8.30	-	2.99	2.48	-	1.56	-	52.80	31
TOTAL	696.50	1,438.70	1,502.40	811.90	414.60	173.15	118.57	87.08	73.21	56.48	72.45	528.84	
AVERAGE	22.47	51.38	48.46	27.06	13.37	5.77	3.83	2.81	2.44	1.82	2.42	17.06	

Annual Total (cu.m.s-day) 5,973.88

DISCHARGE (1) STATION PTE. CARRETERA

HUANCANE RIVER, IN THE BASIN OF LA. TITICACA ELEVATION 3,805 UNIT cu.m.s. YEAR 1960

DATE	JAN.	FEB.	MAR.	APR.	MAY	JUNE	JULY	AUG.	SEPT.	OCT.	NOV.	DEC.	DATE
1	45.00	136.50	48.24	42.50	11.58	6.60	4.20	2.90	3.10	5.00	2.34	32.19	1
2	59.00	106.00	48.82	48.24	11.92	6.30	4.00	2.90	2.90	4.26	2.68	23.34	2
3	58.00	97.60	49.40	47.08	11.24	6.00	4.00	2.90	2.70	4.26	3.43	17.57	3
4	63.00	92.70	40.90	45.92	10.90	6.00	4.00	2.90	2.50	7.90	3.36	15.17	4
5	63.00	86.95	35.96	45.34	10.56	5.40	4.00	2.70	2.50	6.60	3.19	13.98	5
6	74.00	76.40	29.80	40.90	10.56	5.40	4.02	2.70	2.50	5.40	3.02	13.98	6
7	132.00	84.00	23.96	32.60	10.22	5.40	4.02	2.50	2.50	6.00	3.02	12.80	7
8	108.80	60.00	23.22	28.12	10.90	5.40	4.00	2.50	2.45	8.70	3.02	12.80	8
9	79.20	59.00	21.60	24.84	11.92	5.40	3.78	2.50	2.45	4.80	3.19	13.19	9
10	88.80	63.90	19.76	21.60	11.92	5.40	3.78	2.50	2.40	4.80	4.40	13.98	10
11	87.50	55.80	18.38	20.68	10.56	5.40	3.78	2.50	2.60	4.50	4.89	14.79	11
12	74.00	47.00	17.00	20.68	13.04	5.00	3.70	2.50	2.50	3.30	4.64	16.35	12
13	82.00	45.00	16.12	18.84	22.14	5.00	3.54	2.40	2.48	3.30	4.17	13.98	13
14	84.20	47.50	15.24	18.84	18.38	5.30	3.54	2.35	2.40	2.90	3.70	12.06	14
15	63.00	48.50	14.80	18.84	17.00	5.10	3.54	2.35	2.40	2.70	3.70	12.06	15
16	55.80	85.30	13.92	20.68	13.92	5.00	3.500	2.35	2.40	2.90	4.64	13.98	16
17	58.00	92.70	12.60	19.30	12.60	4.80	3.54	2.40	2.50	2.90	6.66	14.38	17
18	72.00	115.10	11.92	18.38	12.26	4.80	3.30	2.38	2.70	3.10	9.10	12.06	18
19	87.50	100.00	11.24	17.46	11.24	5.00	3.30	2.38	2.70	3.00	10.95	10.58	19
20	85.80	101.80	10.90	17.00	9.20	4.80	3.30	2.30	2.50	2.90	9.10	9.47	20
21	70.00	97.60	11.58	17.00	8.64	4.50	3.30	2.35	2.50	2.70	6.96	7.88	21
22	70.00	74.50	11.92	17.00	8.64	4.26	3.30	2.35	2.40	2.60	8.49	6.96	22
23	88.80	72.00	13.48	17.00	8.08	4.26	3.30	2.38	2.50	2.50	8.49	6.66	23
24	91.40	59.50	16.12	13.92	8.08	4.26	3.10	2.40	2.50	2.30	9.10	6.05	24
25	75.00	60.50	35.96	14.80	8.08	4.26	3.10	2.40	5.50	2.20	9.84	5.81	25
26	79.20	52.50	23.76	13.92	8.08	4.26	3.10	2.35	9.50	2.14	8.79	5.58	26
27	98.80	49.00	20.68	13.04	7.80	4.26	3.00	2.30	9.00	2.10	12.80	5.81	27
28	106.00	45.50	35.96	12.60	7.52	4.20	3.00	2.70	6.00	2.10	26.82	5.58	28
29	100.00	41.40	35.96	11.92	7.52	4.20	3.20	3.30	6.00	2.00	31.53	5.58	29
30	156.40	-	49.40	11.920	6.96	4.20	3.00	3.70	5.40	1.90	32.19	8.18	30
31	150.00	-	41.98	-	6.96	-	2.90	3.30	-	1.90	-	8.79	31
TOTAL	2,606.25	2,144.05	780.38	710.98	338.42	150.16	109.14	80.44	102.48	113.66	248.71	371.63	
AVERAGE	84.07	73.93	25.17	23.70	10.92	5.01	3.52	2.60	3.42	3.66	8.2	11.99	

Annual Total (cu.m.s-day) 7,756.31

DISCHARGE (1) STATION Pte. CARRETERA

HUANCANE RIVER. IN THE BASIN OF LA. TITICACA ELEVATION 3,805 UNIT cu.m.s. YEAR 1959

DATE	JAN.	FEB.	MAR.	APR.	MAY	JUNE	JULY	AUG.	SEPT.	OCT.	NOV.	DEC.	DATE
1	9.70	25.00	25.00	35.00	15.80	7.05	3.90	2.91	1.76	1.47	1.50	2.50	1
2	13.17	18.75	25.00	35.00	15.40	7.05	3.90	2.91	1.76	1.47	1.60	3.66	2
3	13.17	13.80	25.00	51.20	14.20	6.70	3.55	3.03	1.76	1.47	1.60	3.20	3
4	11.77	14.20	25.00	60.00	13.40	6.70	3.55	3.15	1.76	1.47	1.60	5.50	4
5	11.77	12.30	21.85	52.30	13.80	6.35	3.55	3.15	1.76	1.74	1.60	6.76	5
6	11.95	10.90	49.00	45.00	15.40	6.35	3.20	3.03	1.76	1.36	1.50	7.60	6
7	10.20	11.60	19.15	39.00	18.05	6.35	3.75	2.91	1.76	1.26	1.45	5.91	7
8	11.60	12.30	101.00	33.10	18.40	6.35	3.75	2.91	1.86	1.26	1.65	5.27	8
9	13.00	29.50	87.40	29.50	18.05	6.35	3.75	2.79	1.86	1.56	1.69	4.58	9
10	17.00	34.00	70.40	31.30	15.40	6.00	3.63	2.67	1.86	2.39	2.80	4.12	10
11	14.20	34.00	98.60	35.00	14.20	6.00	3.39	2.79	1.70	4.46	2.80	3.43	11
12	16.20	36.50	92.40	38.50	13.40	6.00	3.39	2.91	1.70	3.08	2.80	3.20	12
13	18.75	38.00	80.00	45.00	12.30	5.65	3.39	2.79	1.76	2.85	2.20	3.20	13
14	17.70	41.00	74.80	43.00	10.90	5.30	3.21	2.79	1.76	2.62	2.00	2.86	14
15	17.70	34.00	98.60	55.60	10.20	4.95	3.15	2.67	1.76	2.35	2.00	2.86	15
16	17.00	41.50	155.25	66.00	10.55	4.95	3.15	2.67	1.76	2.69	2.00	2.86	16
17	18.40	40.00	129.00	46.00	10.20	4.60	3.03	2.55	1.76	2.52	2.00	3.03	17
18	16.60	34.00	91.10	40.00	9.50	4.60	2.91	2.43	1.70	2.35	2.35	3.43	18
19	12.65	30.40	93.70	37.00	9.50	4.25	2.91	2.55	1.66	2.35	2.35	6.34	19
20	10.00	34.00	96.20	29.50	4.15	4.25	2.91	2.43	1.66	2.13	1.80	6.34	20
21	9.50	46.50	102.40	25.90	8.80	3.90	3.15	2.43	1.76	2.13	1.80	6.55	21
22	8.45	57.80	88.50	23.20	8.45	3.90	3.15	2.43	1.86	2.13	1.80	6.13	22
23	8.45	56.70	69.30	21.40	8.80	3.90	3.15	2.55	1.80	2.13	2.00	6.34	23
24	7.05	46.50	58.90	19.10	10.55	3.90	3.15	2.55	1.86	2.13	2.05	8.76	24
25	6.70	34.00	50.10	18.40	11.60	3.90	3.15	2.55	1.66	1.74	2.50	9.05	25
26	5.30	30.40	44.00	17.70	10.90	4.25	3.15	2.43	1.66	1.74	2.50	10.50	26
27	6.70	27.70	40.00	17.00	10.20	4.25	3.03	2.43	1.56	1.20	2.05	12.42	27
28	7.05	25.45	36.00	17.70	9.15	4.25	3.03	2.43	1.46	1.25	1.80	20.40	28
29	6.70		34.00	17.70	8.45	3.90	3.03	2.43	1.46	1.30	1.90	26.05	29
30	10.90		32.20	16.60	8.10	4.25	3.03	2.43	1.47	1.25	2.40	26.50	30
31	27.25		29.95		7.75		3.03	2.43		1.20		26.50	31
TOTAL	386.78	870.80	2,113.80	1,041.70	370.55	156.20	102.80	13.13	51.67	60.55	59.99	245.65	
AVERAGE	12.48	31.00	68.19	34.78	11.95	5.21	3.29	2.68	1.72	1.95	2.00	7.93	

Annual Total (cu.m.s.-day) 5,542.90

DISCHARGE (1) STATION Pte. CARRETERA

HUANCANE RIVER, IN THE BASIN OF LA. TITICACA ELEVATION 3805 m UNIT cu.m.s YEAR 1958

DATE	January	February	march	April	May	June	July	August	September	October	November	December	DATE
1	43.80	30.70	40.10	12.80	6.40	5.40	4.00	4.30	5.00	3.34	4.20	12.70	1
2	51.50	42.00	33.20	18.50	6.20	5.20	4.00	4.30	5.00	3.15	3.60	7.70	2
3	65.30	43.80	32.00	24.00	5.80	5.00	4.00	4.30	4.30	3.40	3.30	5.70	3
4	64,60	50.50	32.00	25,75	5.70	5.00	4.60	4.30	3.90	3.40	3.15	5 .20	4
5	52.40	43,80	31.40	21.60	5.40	5.00	4.80	4.30	3.70	3.40	3.00	4.25	5
6	53.00	63.400	34.40	18.60	5.20	4.95	4.80	4.20	3.40	3.90	2.850	3.75	6
7	67.20	75.90	34.30	16.80	5.00	4.55	4.80	4.20	3.30	4.30	2.40	3.25	7
8	69.20	87.30	34.30	16.80	5.00	4.40	4.80	3.90	3.30	3.70	2.15	3.25	8
9	67.80	73.90	33.90	13.90	5.00	4.30	4.80	3.80	3.15	3.40	2.15	3.23	9
10	46.90	65.40	40.10	12.20	4.80	4.30	4.80	3.80	3.15	3.15	2.15	2.52	10
11	41.80	48.50	49.90	11.00	4.80	4.30	4.80	3.80	3.15	3.00	2.15	2.52	11
12	35.00	41.30	61.60	10.10	4.80	4.30	4.80	3.80	3.15	2.85	2.15	2.17	12
13	30.70	34.50	80.20	9.50	8.10	4.30	4.80	3.80	3.15	3.15	2.15	1.82	13
14	29.40	37.60	81.40	9.10	20.60	4.30	4.80	3.80	3.00	3.20	2.40	1.80	14
15	28.80	67.80	74.60	8.60	25.20	4.30	4.80	3.70	3.00	3.20	2.40	1.79	15
16	82.60	98.10	49.20	9.10	16.80	4.15	4.60	3.70	2.85	3.20	2.80	1.82	16
17	110.50	82.60	45.00	11.20	8.40	11.20	4.00	3.70	2.85	3.40	2.80	1.82	17
18	115.20	105.30	41.90	8.10	9.10	4.00	4.30	3.60	2.85	3.15	2.80	1.82	18
19	106.00	117.90	53.00	7.40	8.40	4.15	4.30	3.40	2.85	3.55	2.40	3.25	19
20	77.70	95.60	45.00	7.00	8.10	4.30	4.20	3.40	3.00	3.40	2.40	3.75	20
21	62.80	77.00	44.40	6.80	7.40	4.15	4.20	3.40	3.00	3.40	2.15	3.25	21
22	64.00	75.20	37.00	6.40	6.80	4.15	4.20	3.40	2.85	3.15	2.40	5.20	22
23	64.70	73.90	31.40	6.80	6.40	4.00	4.20	3.40	2.90	3.40	3.15	6.70	23
24	53.00	73.90	28.30	7.30	6.10	4.15	4.20	3.40	2.80	3.40	2.85	7.20	24
25	54.20	97.40	27.00	7.30	5.80	4.15	4.30	3.30	2.85	3.70	4.30	7.70	25
26	49.20	80.10	21.00	6.80	5.70	4.30	4.30	3.15	3.00	3.55	11.00	8.70	26
27	34.40	67.20	17.90	6.40	5.50	4.30	4.30	3.15	3.15	2.80	10.90	11.77	27
28	40.100	52.40	17.10	7.00	5.50	4.15	4.30	3.15	3.15	3.15	10.40	15.97	28
29	40.60		14.60	7.00	5.70	4.15	4.30	3.15	2.80	3.15	10.00	21.57	29
30	36.40		12.80	6.80	5.70	4.00	4.30	3.30	3.90	4.00	10.40	15.27	30
31	36.90		12.10		5.70		4.30	4.60		4.30		11.77	31
Total	1,777.70	1,903.60	1,191.10	337.85	237.90	131.70	138.30	115.70	98.45	105.24	120.95	188.89	
Average	57.35	67.99	38.42	11.26	7.67	4.39	4.46	3.73	3.28	3.39	4.03	6.09	

Annual Total (cu.m.s-day) 6.347.38

DISCHARGE (1) STATION Pte. CARRETERA

HUANCANE RIVER, IN THE BASIN OF LA. TITICACA ELEVATION 3805 m UNIT cu.m.s. YEAR 1957

DATE	January	February	March	April	May	June	July	August	September	Octorber	November	December	DATE
1	2.60	18.10	33.40	9.80	10.90	5.20	3.80	2.30	2.10	2.10	2.60	3.40	1
2	3.75	24.40	35.20	14.50	15.70	5.20	3.80	2.30	2.10	2.10	2.60	4.55	2
3	5.50	33.80	38.40	17.70	14.50	5.20	3.60	2.20	2.10	2.10	2.30	6.30	3
4	16.50	25.50	37.00	19.50	29.60	5.20	3.40	2.20	2.10	2.10	2.60	5.30	4
5	17.45	19.20	33.80	23.00	14.50	5.00	3.40	2.20	2.10	2.10	3.60	4.55	5
6	11.35	16.30	34.80	20.40	12.70	4.90	3.40	2.10	2.20	2.10	3.50	4.55	6
7	22.00	15.00	60.20	16.50	11.40	4.90	3.40	2.10	2.20	2.10	3.60	4.55	7
8	13.80	14.50	29.20	15.00	10.50	4.50	3.40	2.30	2.20	2.10	3.40	4.55	8
9	6.50	16.00	38.10	15.00	9.20	4.30	3.20	2.30	2.20	2.10	2.80	4.55	9
10	4.30	25.20	27.20	14.50	8.80	4.20	3.20	2.30	2.20	2.10	2.60	3.60	10
11	3.50	30.00	26.10	12.70	8.80	4.20	3.10	2.30	2.20	2.50	2.50	3.30	11
12	2.90	29.20	24.80	11.40	8.80	4.20	3.10	2.30	2.20	2.10	2.50	3.20	12
13	2.60	19.40	24.10	10.20	9.50	4.20	2.80	2.30	2.20	2.10	2.50	3.20	13
14	4.30	32.90	24.0[illegible]	10.20	10.50	4.20	2.80	2.30	2.20	2.10	2.60	3.10	14
15	17.45	32,90	23.50	10.20	10.50	4.20	2.80	2.30	2.10	2.10	2.80	3.10	15
16	15.50	42.7-	21.90	10.50	9.80	4.20	2.80	2.30	2.10	2.10	2.85	3.00	16
17	10.90	126.90	19.80	11.20	8.50	4.20	2.80	2.21	2.10	2.10	2.60	3.00	17
18	6.50	133.00	19.20	11.50	8.00	4.20	2.80	2.21	2.10	2.10	2.85	2.85	18
19	5.50	120.60	18.90	16.00	7.40	4.20	2.80	2.21	2.10	2.30	2.85	3.30	19
20	3.75	119.10	18.90	13.40	7.20	4.30	2.70	2.10	2.10	2.60	2.60	4.20	20
21	3.30	107.40	18.90	13.40	6.90	4.50	2.70	2.10	2.10	3.50	2.85	6.60	21
22	3.30	79.10	17.70	13.40	6.70	4.50	2.70	2.10	2.10	3.60	2.60	7.80	22
23	3.05	53.70	14.50	12.10	6.30	4.30	2.50	2.10	2.10	3,40	2.60	11.00	23
24	4.30	48.00	10.20	10.80	6.30	4.20	2.50	2.20	2.10	2.80	5.00	25.00	24
25	4.60	42.80	9.80	9.80	6.30	4.20	4.00	2.10	2.10	2.60	4.20	44.20	25
26	8.50	39.70	9.50	9.50	6.30	4.20	5.60	2.10	2.10	2.50	3.50	45.20	26
27	11.70	42.70	8.30	8.50	6.30	4.20	5.60	2.10	2.10	2.30	4.50	46.20	27
28	11.40	39.40	8.30	8.30	6.30	4.20	5.60	2.10	2.10	2.20	4.55	39.20	28
29	10.90		8.30	8.30	6.30	4.20	5.60	2.10	2.10	2.20	4.55	39.20	29
30	10.90		8.30	8.30	6.00	4.00	5.60	2.10	2.10	2.20	4.55	49.00	30
31	14.50		8.30		5.60		5.60	2.10		2.20		55.20	31
Total	263.10	1,347.70	710.70	385.90	249.10	133.20	111.40	68.03	63.90	72.60	95.15	446.75	
Average	8.49	48.13	22.93	12.86	8.04	4.44	3.59	2.19	2.13	2.34	3.17	14.41	

Annual Total (cu.m.s-day) 3,947.530

DISCHARGE (1) STATION Pte. CAPPETERA

HUANCANE RIVER, IN THE BASIN OF LA. TITICACA ELEVATION 3805 m UNIT cu.m.s YEAR 1956

DATE	January	February	March	April	May	June	July	August	September	Octorber	November	December	DATE
1	0.08	39.90	0.03	8.40	3.05	2.35	1.75	1.65	1.08	1.38	1.38	0.95	1
2	0.05	42.15	0.02	7.80	3.05	2.35	1.75	1.48	1.08	1.38	1.38	1.48	2
3	1.76	47.20	0.03	7.80	3.05	2.35	1.75	1.48	1.08	1.38	1.48	1.75	3
4	3.75	61.95	0.01	7.80	3.05	2.35	1.75	1.48	1.28	1.28	1.40	1.95	4
5	2.09	81.35	seco	7.80	3.05	2.35	1.75	1.48	1.48	1.28	1.20	3.50	5
6	0.48	104.05	"	7.80	2.05	2.25	1.75	1.48	1.38	1.28	1.15	7.80	6
7	0.29	111.75	"	7.08	3.05	2.10	1.75	1.48	1.28	1.15	1.10	4.85	7
8	0.18	68.80	"	6.50	3.05	2.10	1.75	1.48	1.28	1.15	1.30	3.75	8
9	39.70	54.70	"	6.50	3.05	2.10	1.75	1.48	1.28	1.15	1.40	3.30	9
10	67.15	35.05	"	4.65	3.05	2.10	1.75	1.38	1.28	1.15	1.35	2.90	10
11	35.15	30.900	"	4.65	3.05	1.95	1.75	1.38	1.15	1.08	1.50	2.25	11
12	33.25	12.84	"	4.65	3.05	1.95	1.75	1.38	1.15	1.08	1.35	1.95	12
13	19.70	8.33	"	4.65	3.50	1.95	1.75	1.38	1.15	1.08	1.80	1.95	13
14	22.95	4.58	"	4.65	3.50	1.95	1.75	1.38	1.15	1.08	1.60	1.95	14
15	25.70	3.33	"	4.65	3.05	1.95	1.75	1.38	1.15	1.08	1.50	1.95	15
16	12.63	2.56	"	4.65	3.30	1.95	1.75	1.38	1.15	1.08	1.35	2.10	16
17	4.58	1.85	"	4.65	3.30	1.95	1.75	1.28	1.08	0.95	1.60	2.25	17
18	3.53	1.18	"	4.65	3.30	1.95	1.75	1.28	1.08	0.95	1.75	0.60	18
19	2.78	0.76	"	4.65	3.30	1.95	1.75	1.28	0.95	0.95	1.85	0.55	19
20	2.76	0.65	"	4.65	3.30	1.85	1.75	1.28	0.95	0.95	2.50	0.60	20
21	2.44	0.40	"	4.65	3.30	1.85	1.75	1.15	0.95	0.95	2.30	18.33	21
22	4.03	0.33	"	3.50	3.30	1.85	1.75	1.15	0.95	0.95	2.80	2.58	22
23	6.04	0.28	"	3.50	3.30	1.85	1.75	1.15	1.15	0.95	3.90	1.95	23
24	4.58	0.25	"	3.75	3.30	1.85	1.75	1.08	1.28	1.08	4.10	1.95	24
25	4.03	0.19	10.93	3.75	2.63	1.85	1.75	1.08	1.48	1.08	4.30	1.65	25
26	3.10	0.17	10.93	3.75	2.63	1.75	1.75	1.08	1.48	1.08	4.30	1.15	26
27	2.10	0.16	8.85	3.50	2.35	1.75	1.65	1.08	1.65	1.11	3.75	1.08	27
28	1.51	0.09	9.38	3.30	2.35	1.75	1.65	1.08	1.48	1.28	3.50	0.88	28
29	2.51	0.04	9.38	3.30	2.35	1.75	1.65	1.08	1.38	1.28	3.05	1.08	29
30	3.60		9.85	3.30	2.35	1.75	1.65	1.08	1.38	1.38	0.95	8.85	30
31	15.88		8.85		2.35		1.65	1.08		1.38		4.30	31
Total	328.33	615.76	68.24	154.93	93.35	59.80	53.75	40.23	36.55	35.29	62.88	92.15	Total
Average	10.59	21.23	2.20	5.16	3.01	1.99	1.73	1.29	1.29	1.14	2.10	2.97	

Annual Total (cu.m.s-day) 1,641.24

DISCHARGE (2) STATION PTE. CARRETERA

RAMIS RIVER, IN THE BASIN OF LA. TITICACA ELEVATION 3,808 m UNIT cu.m.s. YEAR 1956

DATE	JAN.	FEB.	MAR.	APR.	MAY	JUNE	JULY	AUG.	SEPT.	OCT.	NOV.	DEC.	DATE
1	44.60	116.15	63.20	32.30	17.90	12.55	9.50	7.90	6.70	24.10	16.50	9.60	1
2	43.30	152.45	62.10	32.30	16.35	11.85	9.50	7.90	6.60	24.10	16.50	9.40	2
3	52.75	157.10	62.55	31.20	15.60	11.70	9.50	7.70	6.45	24.10	16.50	8.35	3
4	67.00	160.80	59.30	30.30	14.60	11.50	9.20	7.45	6.45	24.10	16.50	8.70	4
5	77.50	198.55	58.20	30.30	14.60	11.30	9.20	7.45	6.45	24.10	15.50	8.50	5
6	61.10	242.75	61.15	30.30	14.60	11.30	9.10	7.45	6.45	24.10	15.50	8.50	6
7	51.75	246.60	60.20	30.30	14.60	11.20	9.10	7.45	6.45	23.00	14.70	8.50	7
8	45.90	240.80	58.35	30.30	14.60	11.20	9.10	7.45	6.45	23.00	14.70	5.35	8
9	53.70	217.55	57.10	30.30	14.15	11.20	9.10	7.30	6.35	23.00	13.80	8.35	9
10	89.10	211.95	57.35	30.30	14.15	11.20	9.10	7.30	6.35	23.00	13.80	8.35	10
11	124.40	194.55	56.85	28.30	14.15	11.20	8.95	3.30	6.20	23.00	13.80	8.35	11
12	145.70	168.90	55.40	27.20	14.00	11.00	8.95	7.30	6.20	23.00	12.00	8.50	12
13	155.15	150.65	54.50	27.20	14.00	10.90	8.95	7.30	6.10	23.00	12.60	8.70	13
14	133.00	133.90	53.35	27.20	14.00	10.90	8.95	7.30	6.10	22.10	12.60	8.35	14
15	128.95	113.20	52.15	27.20	14.00	10.70	8.95	7.30	6.10	22.10	11.90	8.20	15
16	122.40	106.25	51.40	27.20	14.00	10.70	8.80	7.20	6.10	22.10	11.90	8.00	16
17	115.60	94.50	50.95	26.10	13.80	10.55	8.80	7.20	6.10	22.10	11.30	8.35	17
18	112.75	100.65	50.05	25.30	13.50	10.55	8.80	7.20	6.10	21.00	11.30	8.35	18
19	101.50	98.80	49.15	23.00	13.00	10.55	8.70	7.20	5.90	21.00	11.30	8.70	19
20	93.95	92.50	48.10	23.00	13.00	10.55	8.70	7.20	5.90	21.00	11.30	8.95	20
21	73.80	90.55	45.20	23.00	13.00	10.40	8.55	7.10	5.90	21.00	10.90	9.40	21
22	89.65	103.50	44.60	22.00	13.00	10.40	8.55	7.10	5.90	21.00	10.90	9.90	22
23	84.15	98.50	38.50	22.00	13.00	10.40	8.40	7.10	5.90	21.00	10.90	11.90	23
24	117.55	75.65	37.40	22.00	12.60	10.40	8.20	7.10	5.50	21.00	10.50	12.60	24
25	135.95	74.70	36.50	20.80	12.60	10.00	8.20	6.95	5.85	20.00	10.50	15.50	25
26	143.75	72.80	36.50	20.80	12.60	10.00	8.20	6.95	5.85	20.00	10.15	11.30	26
27	129.85	70.40	36.50	19.60	12.60	10.00	8.20	6.95	5.85	19.00	10.15	11.30	27
28	114.50	65.95	35.30	17.40	12.20	9.70	8.05	6.80	5.60	19.00	9.60	10.95	28
29	155.20	64.10	34.40	17.40	12.20	9.70	8.05	6.70	5.60	17.80	9.40	9.60	29
30	103.50		34.40	17.40	12.20	9.70	3.90	6.70	5.45	17.80	9.40	9.40	30
31	103.50		33.30		12.20		3.90	6.70		17.80		14.70	31
TOTAL	3,071.50	3,914.75	1,534.00	772.00	426.30	323.30	271.15	224.00	188.35	672.40	377.00	297.60	
AVERAGE	99.08	134.99	49.48	25.73	13.75	10.77	8.74	7.22	6.08	21.69	12.56	9.60	

Annual Total (cu.m.s.-day 12,072.750

DISCHARGE (2) STATION PTE. CARRETERA

RAMIS RIVER, IN THE BASIN OF LA. TITICACA ELEVATION 3,808 m UNIT cu.m.s. YEAR 1957

DATE	JAN.	FEB.	MAR.	APR.	MAY	JUNE	JULY	AUG.	SEPT.	OCT.	NOV.	DEC.	DATE
1	16.70	53.00	113.50	93.50	43.00	30.50	18.00	14.00	10.50	9.80	9.82	29.80	1
2	24.70	82.40	108.50	98.40	44.40	30.50	16.20	13.80	10.80	9.80	10.05	29.80	2
3	26.80	101.00	118.50	112.20	48.00	26.90	16.70	13.50	11.10	9.77	9.80	29.80	3
4	31.70	117.20	128.30	127.10	49.30	26.90	16.20	13.50	10.50	9.80	10.40	32.00	4
5	35.30	138.30	138.30	168.00	50.40	25.60	16,20	13.80	10,50	9.77	10.40	33.00	5
6	45.50	116.00	140.80	168.00	46.70	25.60	15.60	13.50	10.40	9.75	11.25	23.00	6
7	48.00	93.40	140.80	128.30	41.80	24.40	15.60	13.10	10.36	9.70	12.00	30.40	7
8	50.20	72.70	133.40	103.50	39.30	23.10	15.60	13.10	10.30	9.75	14.40	28.40	8
9	43.00	67.70	112.20	92.20	34.20	23.10	15.60	12.70	10.30	9.75	12.60	32.00	9
10	36.80	89.70	98.40	104.90	30.50	23.10	15.60	12.70	10.30	9.77	11.70	36.50	10
11	29.60	134.60	92.10	103.50	29.20	21.80	15.20	13.00	10.30	9.77	10.50	32.00	11
12	25.50	176.60	84.60	82.40	28.20	20.60	14.40	13.00	10.40	9.72	9.75	27.60	12
13	23.10	172.90	80.00	75.10	40.50	20.60	14.40	12.70	10.20	9.75	9.00	24.40	13
14	28.10	185.40	83.60	67.70	46.70	20.60	13.40	12.70	10.10	9.77	9.00	21.60	14
15	35.30	184.00	97.20	62.80	46.70	20.60	13.40	12.50	10.20	9.80	9.40	20.20	15
16	39.30	189.10	109.80	62.80	48.00	20.60	14.10	12.00	10.00	9.77	9.75	19.60	16
17	45.50	243.90	101.00	65.40	45.50	20.60	14.10	12.00	10.00	9.72	9.82	20.20	17
18	51.70	252.60	87.40	66.40	44.40	25.60	13.40	12.00	10.00	9.72	10.10	19.60	18
19	53.00	267.70	70.30	65.40	41.80	21.80	13.40	12.00	10.10	9.75	10.10	18.20	19
20	46.70	257.70	70.30	65.40	39.30	21.80	13.40	12.20	10.10	9.77	10.10	20.20	20
21	36.80	245.20	61.50	69.00	39.30	20.60	13.80	12.50	9.80	9.80	10.30	20.20	21
22	28.10	238.80	59.20	64.00	36.70	20.60	14.40	12.00	10.00	10.10	10.10	24.40	22
23	29.20	219.00	88.50	61.50	36.70	23.10	14.40	12.00	10.30	9.82	9.80	41.20	23
24	26.90	188.80	107.40	59.20	34.20	19.20	15.20	12.00	9.85	9.80	9.77	50.00	24
25	26.90	205.00	117.20	53.90	34.20	19.20	15.10	11.80	9.85	10.10	9.80	77.20	25
26	26.90	125.90	102.30	45.50	33.10	19.20	14.00	11.80	9.85	10.40	9.80	95.20	26
27	26.90	125.90	102.30	45.50	33.10	19.20	13.80	11.50	9.82	9.85	9.82	10.30	27
28	25.60	125.90	84.60	43.00	34.20	17.20	14.00	11.40	9.80	10.05	12.80	111.20	28
29	30.40		86.00	44.40	33.10	16.70	13.80	11.40	9.72	9.82	12.60	114.80	29
30	35.30		93.50	44.40	34.20	18.00	13.50	11.40	9.77	9.82	11.10	122.10	30
31	41.80		91.00		33.10		13.10	11.20		9.80		117.10	31
TOTAL	1,070.00	4,475.60	3,133.60	2,447.20	1,220.90	667.30	455.60	386.60	305.22	304.61	315.83	1,405.30	
AVERAGE	34.51	159.84	101.08	81.57	39.38	22.24	14.69	12.47	10.17	9.82	10.52	45.33	

Annual Total (cu.m.s.-day) 16,187.760

DISCHARGE (2) STATION PTE. CARRETERA

RAMIS RIVER, IN THE BASIN OF LA. TITICACA ELEVATION 3,808 m UNIT cu.m.s. YEAR 1958

DATE	JAN.	FEB.	MAR.	APR.	MAY	JUNE	JULY	AUG.	SEPT.	OCT.	NOV.	DEC.	DATE
1	150.20	270.50	320.40	122.80	61.70	41.50	25.20	12.30	12.90	11.60	11.60	39.95	1
2	183.30	228.00	256.20	122.40	59.50	40.40	24.50	12.60	12.90	11.80	11.50	47.51	2
3	231.50	225.10	233.70	117.20	57.00	40.40	23.80	12.90	12.90	11.60	19.88	46.25	3
4	243.00	290.00	219.60	125.00	55.60	39.30	19.80	13.70	12.80	12.00	19.88	39.95	4
5	242.20	334.00	210.00	125.00	54.50	39.30	19.10	14.10	12.80	12.30	20.21	37.43	5
6	215.40	320.20	200.20	114.80	53.10	38.10	19.10	14.10	12.80	12.30	19.88	34.91	6
7	190.50	373.00	206.50	112.20	51.70	36.80	18.40	13.90	12.50	12.10	19.22	34.65	7
8	190.50	413.00	230.40	122.80	50.50	36.50	18.00	13.90	12.70	12.00	18.56	28.37	8
9	191.40	398.20	260.10	122.80	48.20	35.60	18.00	13.70	12.70	12.00	19.22	29.90	9
10	194.50	350.40	399.00	107.60	48.20	34.40	18.40	13.50	12.80	12.00	18.89	27.60	10
11	130.50	295.00	380.50	98.50	46.60	34.40	18.40	13.70	12.50	12.10	19.22	26.00	11
12	265.70	244.50	417.40	92.20	46.60	33.60	18.20	13.40	12.50	12.10	19.22	25.30	12
13	120.50	274.80	431.00	86.80	48.20	32.50	18.00	13.40	12.30	11.80	19.22	24.50	13
14	104.60	193.50	440.00	82.00	50.50	32.50	17.10	13.10	12.10	11.80	18.56	22.20	14
15	97.30	225.50	419.00	79.60	59.50	31.40	17.10	13.10	12.00	11.80	19.22	21.40	15
16	113.80	329.50	423.50	76.80	72.20	31.40	17.10	13.40	12.10	11.60	19.88	23.70	16
17	211.50	352.00	432.60	75.40	71.90	31.40	16.70	12.90	12.10	11.60	18.89	23.00	17
18	314.40	377.80	263.10	74.20	68.60	31.40	16.70	12.30	11.80	11.60	19.22	22.20	18
19	344.50	390.80	257.60	72.100	61.70	20.30	16.70	12.60	11.80	11.80	18.89	21.40	19
20	344.50	356.40	284.40	74.60	58.40	29.40	16.70	12.90	11.80	11.80	19.88	25.00	20
21	302.40	316.10	290.10	66.80	54.60	28.30	16.20	13.10	11.80	11.80	18.56	21.40	21
22	320.30	283.00	272.20	65.50	51.70	28.30	13.90	12.60	11.60	11.60	19.55	23.70	22
23	355.00	299.50	244.50	66.80	51.70	27.50	13.70	12.60	11.60	12.00	19.22	29.90	23
24	329.40	317.60	224.20	72.10	49.50	26.70	13.50	12.60	11.60	12.00	19.88	37.40	24
25	280.00	329.50	195.40	74.60	48.20	26.70	13.50	12.90	11.60	12.10	19.22	46.80	25
26	272.30	371.80	204.20	65.50	46.60	26.70	12.30	12.60	11.50	12.00	19.55	71.80	26
27	264.70	403.00	178.00	63.10	44.80	25.90	12.10	12.60	11.60	11.80	20.54	82.60	27
28	220.80	378.80	152.80	61.70	44.80	25.20	11.90	12.60	12.80	11.80	21.20	79.00	28
29	211.50		142.70	61.70	43.00	25.20	13.10	12.30	11.50	11.60	23.84	89.80	29
30	256.20		142.60	61.70	41.50	25.20	12.30	12.60	11.80	11.80	25.16	99.70	30
31	278.20		127.50		43.00		12.30	12.90		11.60		88.00	31
TOTAL	7,210.60	8,885.50	8,479.50	2,664.70	1,643.60	966.40	521.80	404.90	366.20	367.80	577.76	1,269.32	
AVERAGE	232.60	317.33	273.53	88.82	53.01	32.22	16.83	13.00	12.20	11.86	19.25	40.94	

Annual Total (cu.m.s.-day 33,358.280

DISCHARGE (2) STATION PTE. CARRETERA

RAMIS RIVER, IN THE BASIN OF LA. TITICACA ELEVATION 3,808 m UNIT cu.m.s. YEAR 1959

DATE	JAN.	FEB.	MAR.	APR.	MAY	JUNE	JULY	AUG.	SEPT.	OCT.	NOV.	DEC.	DATE
1	80.00	49.25	162.00	155.90	105.00	73.70	56.05	41.80	31.40	27.80	20.60	21.20	1
2	76.40	72.80	164.00	163.00	98.00	67.40	55.20	41.00	31.40	24.80	20.00	26.00	2
3	76.40	94.20	141.50	197.30	96.10	66.50	55.20	41.80	30.50	24.80	13.60	27.80	3
4	80.00	85.10	150.65	286.50	94.20	63.80	54.35	40.20	29.60	25.40	13.60	30.50	4
5	69.20	73.70	203.70	295.60	91.35	63.80	53.50	41.00	30.50	25.40	16.80	34.10	5
6	65.60	69.20	252.05	250.90	89.45	62.90	52.65	39.40	29.60	23.60	16.80	57.20	6
7	65.60	67.40	312.25	217.70	88.50	62.00	53.50	38.60	29.60	23.00	15.20	98.00	7
8	67.40	65.60	371.50	190.70	88.50	62.00	53.50	41.00	27.80	23.00	16.80	76.00	8
9	60.30	65.60	390.50	172.20	89.45	62.90	52.65	39.40	27.80	23.60	16.80	76.00	9
10	50.60	80.00	362.00	177.45	92.30	62.90	52.65	38.60	27.80	25.40	12.00	70.00	10
11	59.45	118.95	386.70	215.50	89.45	62.00	52.65	39.40	28.70	24.80	18.40	58.80	11
12	62.00	145.50	432.60	238.25	83.40	62.00	51.80	40.20	28.70	24.80	20.00	49.50	12
13	61.15	150.65	432.60	267.50	82.55	61.15	51.80	39.40	28.70	23.60	21.20	42.00	13
14	71.00	203.70	404.00	278.75	79.10	60.30	50.95	38.60	28.70	25.40	18.40	37.00	14
15	75.50	200.55	410.00	235.95	78.20	60.30	50.95	38.60	27.80	25.40	21.20	34.10	15
16	76.40	185.50	445.20	215.50	77.30	60.30	50.10	37.80	26.90	26.00	20.00	32.30	16
17	80.00	185.50	420.00	211.10	76.10	59.45	49.25	38.00	26.90	24.80	18.40	28.70	17
18	80.00	185.50	323.70	188.50	75.50	58.60	49.25	35.40	26.90	24.80	18.40	26.90	18
19	78.20	166.00	306.00	176.40	72.80	57.75	48.40	37.00	26.90	23.60	21.20	28.90	19
20	69.20	164.00	343.10	172.20	74.60	57.75	49.25	37.00	26.00	24.20	21.80	35.00	20
21	62.00	170.70	388.60	154.85	73.70	56.90	45.85	37.00	26.00	24.20	23.00	60.40	21
22	51.80	213.30	379.10	139.50	73.70	56.05	46.70	36.20	25.40	24.80	21.80	83.60	22
23	48.40	226.75	298.20	128.50	74.60	55.20	46.70	36.20	24.80	24.80	21.20	88.10	23
24	45.85	235.95	306.00	122.75	76.40	55.20	45.85	36.20	26.00	23.60	18.40	75.00	24
25	43.40	231.35	270.00	116.00	78.20	54.35	45.85	33.80	26.90	23.60	18.40	79.00	25
26	41.80	213.30	241.70	111.00	82.55	54.35	45.00	33.80	26.00	23.00	20.00	100.00	26
27	39.40	210.00	108.00	83.40	56.05	45.00	45.00	34.60	26.00	20.60	22.40	128.00	27
28	38.60	174.30	203.70	106.00	80.85	56.05	44.20	34.60	25.40	23.00	21.80	144.00	28
29	41.80		186.50	105.00	78.20	56.05	42.60	35.40	23.00	21.80	21.20	161.00	29
30	41.80		179.50	105.00	76.40	55.20	41.80	33.80	26.00	21.80	23.00	188.00	30
31	42.60		152.75		74.60		42.60	33.80		20.60		200.00	31
TOTAL	1,909.85	4,124.35	9,241.10	5,503.50	2,574.75	1,802.90	1,535.80	1,102.60	827.70	746.00	572.40	2,176.90	
AVERAGE	61.60	147.29	298.10	183.45	83.05	60.09	49.54	35.56	27.59	24.06	19.08	70.22	

Annual Total (cu.m.s.-day) 32,118.850

DISCHARGE (2) STATION PTE. CARRETERA

RAMIS RIVER, IN THE BASIN OF LA. TITICACA ELEVATION 3,808 m UNIT cu.m.s. YEAR 1960

DATE	JAN.	FEB.	MAR.	APR.	MAY	JUNE	JULY	AUG.	SEPT.	OCT.	NOV.	DEC.	DATE
1	234.40	442.00	192.00	118.60	76.00	33.50	21.50	19.80	14.40	14.70	18.50	153.00	1
2	229.80	462.00	189.80	123.20	80.20	33.50	24.50	14.90	14.30	25.00	18.50	144.00	2
3	263.20	446.00	179.40	154.20	76.00	33.50	23.90	15.70	14.20	29.00	18.50	119.60	3
4	322.40	424.00	187.80	165.40	76.00	32.00	24.50	15.70	14.30	33.00	20.70	94.60	4
5	297.40	406.00	178.00	157.00	77.40	30.50	23.90	15.30	14.30	41.00	20.90	82.20	5
6	301.80	398.00	161.20	152.80	76.00	30.50	23.90	15.35	14.30	67.50	19.60	83.60	6
7	367.40	392.00	141.60	134.70	72.80	30.50	23.90	14.80	14.20	67.50	20.70	80.80	7
8	421.00	376.40	132.80	124.80	72.80	29.75	23.30	14.90	14.20	63.00	20.70	70.20	8
9	406.00	354.40	121.60	114.40	72.80	29.75	22.70	15.35	14.20	41.00	19.60	71.50	9
10	320.00	350.60	115.80	104.40	71.20	29.00	22.90	15.35	14.20	33.00	21.80	74.10	10
11	327.20	322.40	110.20	101.20	71.20	29.00	22.70	15.35	14.20	33.00	21.80	80.80	11
12	363.80	301.80	106.00	96.40	69.60	29.00	22.10	15.00	14.20	33.00	20.70	89.20	12
13	369.20	271.60	101.20	93.20	69.60	26.75	22.70	15.00	14.10	29.00	22.90	86.40	13
14	365.60	272.80	98.00	94.80	74.40	26.00	24.50	15.00	14.10	27.00	24.00	79.40	14
15	390.00	270.40	93.20	108.80	76.00	26.00	24.50	15.00	14.00	27.00	26.50	67.60	15
16	406.00	318.00	88.60	117.20	76.00	25.25	24.50	15.00	14.10	25.00	26.50	65.00	16
17	412.00	356.30	85.80	114.40	69.60	26.00	23.90	14.90	14.10	25.00	30.25	65.00	17
18	344.90	376.40	81.60	110.20	66.40	24.50	17.45	14.80	14.60	29.00	31.50	62.00	18
19	339.70	386.00	78.80	101.20	63.20	24.50	16.75	14.70	14.60	27.00	41.90	56.00	19
20	427.00	390.00	76.00	94.80	61.60	24.50	16.75	14.90	14.40	27.00	72.80	50.00	20
21	478.00	380.00	72.80	94.80	60.00	23.30	16.75	14.70	14.50	25.00	80.80	44.60	21
22	438.00	367.40	72.80	93.20	60.00	23.30	16.95	14.50	14.40	25.00	67.60	37.85	22
23	406.00	340.80	71.20	93.20	58.40	23.30	17.10	14.50	14.60	23.00	56.00	36.50	23
24	409.00	320.00	76.00	96.40	58.40	22.70	17.80	14.50	14.70	23.00	50.00	34.00	24
25	412.00	297.40	83.00	99.60	56.80	23.30	17.45	14.50	14.40	23.00	44.60	30.25	25
26	415.00	281.30	84.40	96.40	55.20	24.50	17.45	14.50	14.20	23.00	44.60	29.00	26
27	418.00	265.60	88.60	91.60	53.60	24.50	17.80	14.50	14.50	21.00	65.00	29.00	27
28	418.00	258.40	93.20	85.80	53.60	26.00	17.10	14.00	14.20	19.00	85.00	26.50	28
29	442.00	234.40	96.40	84.40	44.00	26.00	16.95	14.70	14.20	20.00	99.80	26.50	29
30	458.00		106.00	81.60	44.00	26.00	16.75	14.40	14.50	21.00	140.00	30.25	30
31	454.00		120.00		45.60		15.00	14.40		18.00		35.95	31
TOTAL	11,656.80	10,062.40	3,481.40	3,291.40	2,038.40	816.90	637.35	461.15	429.20	937.70	1,251.55	2,034.70	
AVERAGE	376.02	346.91	112.30	109.71	65.75	27.23	20.55	14.87	14.30	30.24	41.71	65.63	

Annual Total (cu.m.s.-day) 37,098.950

DISCHARGE (2) STATION PTE. CARRETERA

RAMIS RIVER, IN THE BASIN OF LA. TITICACA ELEVATION 3,808 m UNIT cu.m.s. YEAR 1961

DATE	JAN.	FEB.	MAR.	APR.	MAY	JUNE	JULY	AUG.	SEPT.	OCT.	NOV.	DEC.	DATE
1	50.40	235.50	188.60	167.50	93.00	54.70	23.00	15.32	16.34	13.90	12.16	98.00	1
2	52.80	218.00	250.85	191.50	23.00	47.90	32.00	14.96	14.60	14.92	12.38	67.20	2
3	62.20	184.50	264.75	159.50	81.00	47.90	22.30	14.60	15.18	15.28	12.16	57.20	3
4	78.80	157.25	266.50	154.70	81.00	47.90	22.20	14.60	13.44	14.92	12.38	60.00	4
5	100.90	149.50	306.80	137.55	72.50	44.50	22.20	14.60	12.28	14.56	12.60	60.00	5
6	115.50	148.90	390.00	133.30	72.50	41.10	20.60	14.60	13.44	14.92	11.50	51.60	6
7	110.00	153.30	377.00	122.50	67.50	41.10	20.60	14.60	13.44	14.92	11.50	51.60	7
8	111.30	190.70	344.00	112.90	52.50	41.10	17.44	14.60	14.020	14.20	11.72	41.20	8
9	117.80	262.40	333.00	111.70	52.50	41.10	18.48	14.30	14.02	13.88	11.72	38.80	9
10	116.50	243.65	337.40	116.50	52.50	39.40	21.40	14.36	14.02	13.88	11.00	36.40	10
11	102.20	233.60	333.00	102.90	55.00	37.70	19.00	14.12	13.44	13.88	12.00	36.40	11
12	95.70	237.50	333.00	101.00	62.50	34.60	18.48	13.88	14.02	13.88	13.00	42.40	12
13	84.00	195.35	341.80	97.20	62.50	34.60	19.00	13.60	13.44	13.56	21.60	48.80	13
14	76.20	172.35	298.40	101.00	72.50	33.20	19.96	13.64	13.44	13.56	20.00	63.60	14
15	73.60	205.40	259.50	116.50	75.00	31.80	17.96	13.69	14.02	12.92	28.00	79.80	15
16	66.60	200.00	240.95	139.10	72.50	33.20	18.48	13.88	13.44	12.60	26.40	90.60	16
17	60.00	176.40	232.80	143.75	67.50	31.80	17.96	14.12	13.44	12.60	29.20	104.10	17
18	57.60	159.90	213.20	189.80	67.50	30.40	17.44	13.64	13.44	12.38	30.40	123.00	18
19	54.00	149.70	216.60	239.50	65.00	29.00	16.92	13.64	13.44	12.60	30.40	112.00	19
20	50.40	147.90	218.30	245.10	62.50	29.00	16.40	13.64	13.44	12.60	30.40	116.00	20
21	51.60	147.90	198.20	218.50	92.50	29.00	16.40	13.88	12.86	12.92	34.00	124.00	21
22	60.00	148.20	174.60	183.00	72.50	29.00	16.04	13.64	13.44	12.60	47.20	158.00	22
23	65.50	149.30	168.30	145.30	75.00	29.00	16.40	13.40	13.44	12.60	55.60	187.20	23
24	64.40	160.50	161.90	122.50	81.00	29.00	16.40	12.80	13.44	12.60	50.80	21.075	24
25	60.00	196.40	137.60	116.50	81.00	28.00	16.40	13.30	13.44	11.94	47.20	229.20	25
26	68.80	160.50	126.00	110.50	79.00	28.00	16.40	13.40	14.02	12.60	47.20	231.40	26
27	110.00	160.50	115.20	110.50	62.50	26.00	16.04	13.20	13.44	12.38	60.40	224.80	27
28	134.70	162.60	111.60	104.80	62.50	25.00	16.40	12.80	13.44	12.38	61.60	196.80	28
29	202.80	-	118.80	101.00	60.00	25.00	16.04	13.00	13.90	12.38	60.40	200.00	29
30	253.40	-	13.80	96.25	52.50	25.00	15.68	13.20	13.90	12.60	59.20	244.00	30
31	265.40	-	130.35	-	52.50	-	15.32	13.20	-	11.94	-	270.40	31
TOTAL	2,973.10	5,075.85	7,320.80	4,190.35	2,131.50	1,045.00	567.44	430.10	412.82	411.86	884.56	3,631.05	
AVERAGE	95.93	181.28	236.15	139.67	68.25	34.83	18.30	13.87	13.76	13.28	29.48	17.13	

Annual Total ( )

DISCHARGE (2) STATION PTE. CARRETERA

RAMIS RIVER, IN THE BASIN OF LA. TITICACA ELEVATION 3,808 m UNIT cu.m.s. YEAR 1962

DATE	JAN.	FEB.	MAR.	APR.	MAY	JUNE	JULY	AUG.	SEPT.	OCT.	NOV.	DEC.	DATE
1	280.00	201.90	354.40	273.60	90.40	47.20	29.00	20.00	14.40	18.00	19.00	10.00	1
2	282.00	170.40	350.20	260.00	90.40	47.20	29.00	19.00	14.50	18.00	18.40	9.00	2
3	286.20	145.40	367.00	256.80	88.20	47.20	21.00	19.00	14.50	17.30	18.00	13.50	3
4	273.60	168.10	414.20	237.80	86.00	48.60	29.00	18.50	14.00	17.50	18.00	14.00	4
5	224.60	358.60	390.00	218.00	81.80	48.60	29.00	18.50	14.00	17.50	18.40	20.00	5
6	240.00	410.00	360.00	201.90	19.70	47.20	28.00	17.50	14.00	15.00	17.50	26.00	6
7	233.40	410.00	320.80	204.20	77.60	47.20	28.00	17.50	16.00	15.50	17.50	29.00	7
8	269.40	410.00	311.80	193.00	13.40	47.20	27.00	18.00	16.00	16.00	17.50	39.70	8
9	273.60	387.70	348.10	187.00	71.30	47.20	26.00	17.50	13.60	14.20	17.00	41.50	9
10	294.60	367.00	358.60	161.20	69.20	45.80	24.80	17.50	13.60	15.00	17.50	43.00	10
11	277.80	352.30	367.00	156.60	67.10	38.80	24.80	17.50	13.60	15.50	16.50	44.50	11
12	254.70	377.30	404.00	152.00	65.00	37.40	24.80	17.00	13.60	13.80	16.00	50.80	12
13	193.00	244.20	441.50	143.20	65.00	37.40	24.20	17.00	13.60	15.00	16.50	52.50	13
14	175.00	197.30	449.90	136.60	65.00	36.00	23.60	16.50	13.60	16.00	16.50	70.00	14
15	213.40	156.60	452.00	134.40	65.00	36.00	23.00	16.00	14.90	15.00	17.00	88.00	15
16	195.00	127.80	452.00	138.80	67.10	36.00	23.00	16.00	14.90	14.90	17.00	154.00	16
17	191.00	105.80	435.20	152.00	65.00	36.00	22.40	16.00	14.50	13.60	16.50	178.80	17
18	231.20	77.60	452.00	152.00	65.00	36.00	23.60	15.50	14.50	14.50	17.20	174.00	18
19	179.00	65.00	431.00	138.80	65.00	38.80	23.60	15.50	14.30	12.00	17.20	161.00	19
20	108.00	77.60	410.00	130.00	63.50	38.80	23.60	15.50	14.30	14.00	17.00	130.00	20
21	65.00	797.00	371.60	130.00	62.00	37.40	23.00	15.00	15.20	13.60	17.00	117.50	21
22	71.30	101.40	356.50	130.00	56.00	37.40	23.00	14.50	15.20	13.90	17.50	162.00	22
23	116.80	130.00	333.40	123.40	56.00	35.00	22.40	15.00	14.00	15.00	18.00	199.00	23
24	130.00	138.80	320.60	116.80	54.50	32.00	22.40	15.50	14.00	15.00	16.00	246.00	24
25	88.20	191.00	325.00	114.60	54.50	32.00	22.40	14.50	13.90	14.20	16.00	265.00	25
26	15.50	273.60	335.50	114.60	53.00	31.00	20.60	14.50	13.70	13.90	15.00	274.00	26
27	121.20	358.60	350.20	110.20	53.00	30.00	20.00	14.40	13.40	14.60	15.50	298.00	27
28	235.60	387.70	354.40	105.80	56.00	30.00	20.60	14.20	13.70	14.80	15.00	295.00	28
29	292.50	-	339.70	99.20	53.00	30.00	20.60	14.20	14.80	16.00	14.00	263.00	29
30	286.20	-	303.00	94.80	53.00	30.00	20.60	14.20	13.40	15.00	13.80	253.00	30
31	231.20	-	277.80	-	51.50	-	22.00	14.00	-	14.50	-	241.00	31
TOTAL	6,384.00	6,482.40	11,536.40	4,767.30	2,063.20	1,169.40	752.00	505.30	427.50	469.90	504.00	3,962.00	
AVERAGE	205.93	231.51	372.14	158.91	66.55	38.98	24.25	16.30	14.25	15.15	16.80	127.80	

Annual Total (cu.m.s.-day) 39,023.400

DISCHARGE (2) STATION PTE. CARRETERA

RAMIS RIVER, IN THE BASIN OF LA. TITICACA ELEVATION 3,808 m UNIT cu.m.s. YEAR 1963

DATE	JAN.	FEB.	MAR.	APR.	MAY	JUNE	JULY	AUG.	SEPT.	OCT.	NOV.	DEC.	DATE
1	243.00	336.90	310.00	315.00	170.00	45.00	28.50	21.50	18.50	18.00	25.00	25.00	1
2	241.50	342.50	310.00	292.00	166.00	45.00	27.00	21.20	18.50	18.00	25.00	39.00	2
3	250.00	342.80	315.00	236.00	145.00	45.00	26.00	21.20	18.80	18.00	25.00	43.00	3
4	236.00	339.20	310.00	196.00	138.00	45.00	26.00	21.00	18.50	18.00	24.00	41.00	4
5	216.00	347.60	292.60	196.00	124.00	45.00	25.20	21.50	18.40	17.80	24.00	43.00	5
6	229.00	346.40	262.50	196.00	115.00	42.00	26.00	21.50	18.40	18.00	22.00	47.00	6
7	235.00	347.60	245.00	196.00	110.00	42.00	25.00	21.50	18.40	18.00	20.00	53.00	7
8	236.00	316.00	250.00	180.00	110.00	39.00	26.00	21.20	18.60	17.80	22.00	51.00	8
9	274.00	308.40	240.00	180.00	105.00	39.00	25.00	21.00	18.80	18.00	22.00	53.00	9
10	289.00	301.80	245.00	190.00	100.00	39.00	25.00	20.80	18.60	17.80	22.00	55.00	10
11	294.00	304.00	245.00	190.00	92.00	40.00	25.00	20.50	18.60	17.80	20.00	55.00	11
12	283.90	290.00	242.50	180.00	92.00	42.00	23.50	20.80	18.50	20.00	20.00	59.50	12
13	277.60	261.00	250.00	180.00	90.00	40.00	23.50	20.50	18.50	20.00	20.00	66.25	13
14	285.00	256.50	239.50	180.00	87.00	37.00	23.50	20.50	18.50	23.00	19.50	70.75	14
15	278.50	264.00	230.00	244.00	87.00	38.00	23.60	20.60	18.50	24.50	19.50	82.50	15
16	295.40	297.00	228.50	236.00	85.00	37.00	22.80	20.50	18.50	24.50	19.50	147.50	16
17	334.50	269.00	225.50	228.00	85.00	33.00	22.80	20.50	18.50	24.00	10.00	195.00	17
18	349.50	270.00	227.00	212.00	78.00	32.00	22.80	20.50	19.00	24.00	19.00	157.50	18
19	351.00	283.50	225.50	240.00	78.00	33.00	22.50	20.00	18.50	24.00	18.50	135.00	19
20	328.50	290.00	230.00	220.00	74.00	31.00	22.50	20.00	18.50	23.00	18.50	115.00	20
21	315.00	270.00	245.00	195.00	74.00	30.00	22.00	20.00	18.50	23.00	17.00	100.00	21
22	314.00	268.00	265.00	200.00	74.00	30.00	22.00	19.80	18.50	24.00	18.00	90.00	22
23	306.00	283.50	267.50	190.00	70.00	30.00	21.60	19.60	18.60	24.00	18.00	87.50	23
24	301.40	297.00	265.00	190.00	69.00	29.00	21.60	19.60	18.50	25.00	23.00	82.50	24
25	300.20	310.00	280.00	190.00	65.00	28.50	21.50	19.80	18.20	25.00	24.00	77.50	25
26	305.00	317.50	255.00	190.00	62.00	28.50	21.50	19.80	18.20	25.00	22.00	68.50	26
27	351.00	322.00	247.50	180.00	59.00	28.50	21.50	19.60	19.00	25.00	20.00	64.00	27
28	327.00	316.00	247.50	180.00	55.00	28.00	21.00	19.50	19.00	25.00	19.00	64.00	28
29	327.00	-	242.50	180.00	52.00	27.60	21.20	19.50	19.00	25.00	19.50	64.00	29
30	345.00	-	265.00	180.00	50.00	27.00	21.50	19.00	18.20	24.00	20.00	59.50	30
31	345.00	-	295.00	-	45.00	-	729.90	632.00	-	25.00	-	59.50	31
TOTAL	9,064.00	8,480.90	7,976.50	6,162.00	2,804.00	1,076.00	728.90	632.00	556.80	674.20	625.00	2,351.00	
AVERAGE	292.38	302.88	257.30	205.40	90.45	35.87	23.54	20.38	18.56	21.74	20.83	75.83	

Annual Total (cu.m.s.-day) 41,132.408

DISCHARGE (2) STATION PTE. CARRETERA

RAMIS RIVER, IN THE BASIN OF LA TITICACA ELEVATION 3,808 m UNIT cu.m.s. YEAR 1964

DATE	JAN.	FEB.	MAR.	APR.	MAY	JUNE	JULY	AUG.	SEPT.	OCT.	NOV.	DEC.	DATE
1	71.50	56.50	92.00	302.50	85.80	97.90	15.40	14.80	14.00	11.30	9.40	12.75	1
2	71.50	56.50	77.50	244.20	79.70	31.50	15.10	14.80	14.00	11.30	10.40	12.00	2
3	61.50	68.80	80.25	205.00	67.50	31.50	15.10	17.00	13.70	11.05	12.40	12.50	3
4	51.00	74.50	80.25	176.00	68.00	29.80	15.10	17.00	13.70	11.55	12.20	13.80	4
5	61.50	85.00	77.50	173.40	68.00	27.50	14.80	17.00	13.10	11.05	12.20	21.00	5
6	62.00	102.50	80.25	130.00	65.00	27.50	20.00	17.00	13.40	11.05	12.20	26.00	6
7	46.00	106.00	85.75	125.00	65.00	27.50	19.44	17.00	13.10	10.80	12.40	32.40	7
8	51.00	113.00	94.00	119.60	59.00	19.00	19.44	16.65	13.10	11.05	12.20	30.00	8
9	90.20	102.50	110.50	108.80	59.00	23.20	18.88	16.65	12.80	10.80	11.00	28.00	9
10	130.30	99.00	116.00	106.10	59.00	21.80	18.88	16.65	12.80	10.80	12.00	24.00	10
11	113.10	99.00	121.50	103.40	56.00	20.40	18.32	16.35	13.40	10.55	12.00	20.00	11
12	120.00	92.00	118.75	103.40	56.00	20.40	18.32	16.35	12.80	10.26	12.00	22.00	12
13	135.00	88.50	110.50	95.00	53.00	19.00	18.88	16.00	12.80	10.80	11.00	24.00	13
14	125.50	106.00	116.00	91.90	50.00	19.00	19.44	16.00	12.80	10.26	10.50	30.00	14
15	115.80	142.50	116.00	91.90	48.90	19.00	18.88	15.75	12.80	10.00	10.50	32.50	15
16	103.00	153.75	110.50	88.85	48.90	19.00	19.88	15.40	12.50	9.80	10.50	34.50	16
17	90.20	164.50	129.75	82.75	47.80	19.00	18.32	15.40	12.50	9.60	10.50	36.80	17
18	82.50	178.00	178.40	79.70	47.80	18.40	17.76	15.40	12.80	9.60	10.50	36.80	18
19	77.00	192.00	225.50	76.65	42.70	18.40	17.76	15.40	12.50	9.40	10.80	36.80	19
20	66.20	197.00	219.50	79.70	43.60	17.80	17.76	14.85	12.50	9.20	10.50	36.80	20
21	56.50	199.00	229.50	85.80	44.50	17.20	18.32	14.85	12.80	9.20	10.50	43.50	21
22	51.60	200.00	282.00	95.00	42.70	12.80	16.80	14.85	12.50	8.60	11.00	43.50	22
23	51.60	181.00	298.60	100.70	42.70	17.80	16.00	14.85	12.50	8.50	11.00	36.80	23
24	51.60	150.00	313.60	103.40	42.70	16.60	16.00	14.85	12.50	8.80	11.00	39.00	24
25	51.60	131.25	324.40	100.70	42.70	16.60	15.20	14.56	11.55	8.80	11.00	39.00	25
26	56.50	116.50	342.40	91.90	41.80	16.60	15.20	14.56	11.80	8.80	11.50	50.50	26
27	77.00	116.50	365.00	79.70	40.90	16.60	15.20	14.28	11.80	9.00	11.50	55.00	27
28	70.50	113.00	347.90	98.00	40.90	16.60	15.20	14.28	11.30	8.40	11.20	68.50	28
29	66.20	90.00	298.60	103.90	40.00	15.40	15.20	14.00	11.30	8.60	11.50	59.70	29
30	66.20		202.50	91.90	40.00	15.70	14.60	14.00	11.55	9.00	12.00	52.80	30
31	56.50		295.00		40.90		14.00	14.00		8.80		50.50	31
TOTAL	2,380.60	3,583.80	5,639.90	3,534.35	1,630.50	624.50	529.18	480.53	380.70	306.70	337.40	1,061.45	
AVERAGE	76.79	123.57	181.93	117.81	52.59	20.81	17.07	15.50	12.69	9.89	11.24	34.24	

Annual Total (cu.m.s.-day 20,489.630

DISCHARGE (2) STATION PTE. CARRETERA

RAMIS RIVER, IN THE BASIN OF LA. TITICACA ELEVATION 3,808 m UNIT cu.m.s. YEAR 1965

DATE	JAN.	FEB.	MAR.	APR.	MAY	JUNE	JULY	AUG.	SEPT.	OCT.	NOV.	DEC.	DATE
1	48.20	238.00	189.00	182.50	105.00	31.00	19.50	17.70	12.80	11.36	14.90	15.80	1
2	57.50	307.00	169.50	182.50	100.00	31.00	20.50	18.00	11.84	11.24	14.00	16.70	2
3	60.00	328.00	173.00	209.00	89.50	28.00	20.20	18.10	12.80	11.36	14.00	17.60	3
4	62.00	273.00	191.00	229.50	96.00	27.10	20.20	17.40	12.40	11.36	11.50	19.40	4
5	74.00	237.00	202.00	198.80	96.00	27.10	19.95	17.40	12.80	11.12	11.50	22.10	5
6	102.00	261.50	253.25	186.00	82.00	27.10	20.20	16.70	12.80	11.34	9.50	26.60	6
7	88.00	271.00	293.80	169.50	75.00	27.10	20.20	16.70	13.60	11.24	9.50	27.80	7
8	70.00	250.00	357.00	160.00	58.00	25.30	19.95	16.70	12.40	11.36	11.50	34.00	8
9	58.50	218.00	393.50	157.00	58.00	24.50	19.45	17.40	12.40	11.36	9.50	47.20	9
10	65.00	210.00	354.00	151.00	58.00	24.50	19.45	16.00	12.80	11.36	15.80	56.00	10
11	62.00	205.00	264.00	143.50	54.00	24.00	19.45	16.00	13.20	11.12	15.80	56.00	11
12	68.00	202.00	313.60	134.50	54.00	23.55	19.95	15.60	12.80	11.12	14.90	49.40	12
13	72.00	238.00	327.00	131.50	48.30	23.55	19.24	15.60	12.80	11.00	15.80	49.44	13
14	66.00	246.00	267.50	128.60	45.50	23.55	19.24	15.20	13.20	11.00	15.80	46.10	14
15	74.00	227.00	264.00	130.00	42.00	22.60	19.00	14.40	12.40	11.12	15.80	42.00	15
16	86.00	202.00	300.50	123.00	42.00	23.00	18.80	14.40	11.68	11.00	17.60	50.50	16
17	102.00	196.00	348.00	121.60	42.00	23.00	18.60	14.80	12.80	10.80	19.40	59.60	17
18	120.00	184.00	448.80	124.40	42.00	22.60	18.80	14.80	12.80	11.00	22.10	59.60	18
19	130.50	173.00	448.80	118.80	39.65	23.00	18.80	14.40	12.40	11.00	22.10	74.20	19
20	151.00	164.00	430.50	118.80	39.65	22.60	18.80	14.00	12.40	10.00	21.20	108.00	20
21	169.00	169.00	364.00	123.00	39.65	22.20	18.60	14.00	11.84	10.40	22.10	104.00	21
22	210.00	186.00	287.00	127.50	37.00	22.20	18.40	14.00	11.84	10.40	20.30	104.00	22
23	175.00	231.00	248.00	128.60	37.00	21.80	18.20	14.00	11.76	10.00	18.50	100.00	23
24	140.00	235.00	217.00	130.00	37.00	21.80	18.20	14.40	11.76	10.20	17.60	106.00	24
25	138.00	222.00	198.80	124.40	33.00	21.80	18.20	14.40	11.76	10.20	16.70	112.00	25
26	157.00	258.00	195.50	115.00	33.00	21.40	18.20	13.60	11.76	10.00	16.70	82.40	26
27	186.00	318.00	215.40	109.00	33.00	21.40	18.20	13.60	11.68	10.00	17.60	54.90	27
28	182.00	263.00	207.00	106.20	31.00	21.40	17.70	13.20	11.60	9.92	17.60	46.10	28
29	194.00		184.00	106.20	31.00	19.50	17.70	13.20	11.48	9.84	16.70	46.10	29
30	220.00		182.50	104.80	31.00	19.50	17.40	12.40	11.24	9.92	15.80	51.60	30
31	231.00		184.00		31.00		17.70	13.20		9.92		68.40	31
TOTAL	3,618.70	6,512.50	8,471.95	1,275.20	1,640.25	717.15	588.78	471.30	369.84	332.96	482.70	1,753.50	
AVERAGE	116.73	232.58	273.28	142.50	52.91	23.90	18.99	15.20	12.32	10.74	16.09	56.56	

Annual Total (cu.m.s.-day) 29,234.830

DISCHARGE (2) STATION PTE. CARRETERA

RAMIS RIVER, IN THE BASIN OF LA. TITICACA ELEVATION 3.808 m UNIT cu.m.s. YEAR 1966

DATE	JAN.	FEB.	MAR.	APR.	MAY	JUNE	JULY	AUG.	SEPT.	OCT.	NOV.	DEC.	DATE
1	105.20	120.00	204.00	72.80	24.50	22.50							1
2	120.50	127.40	219.00	76.70	24.50	21.90							2
3	112.20	139.00	245.50	74.00	25.50	21.30							3
4	118.50	141.00	260.00	70.50	25.50	20.60							4
5	120.50	135.00	260.00	67.00	25.50	20.60							5
6	116.20	121.00	250.40	60.00	23.70	19.00							6
7	105.80	111.00	255.00	54.50	23.70	20.60							7
8	96.00	111.00	244.00	49.20	23.70	19.80							8
9	88.00	109.30	219.00	47.40	23.70	19.80							9
10	84.00	112.90	179.40	43.80	22.50	19.80							10
11	79.70	118.30	146.50	42.00	21.30	19.00							11
12	77.00	138.00	124.00	45.50	21.30	18.20							12
13	75.90	139.00	109.80	45.50	22.50	17.76							13
14	75.90	122.00	99.50	42.00	21.90	17.76							14
15	74.30	118.30	89.20	40.40	24.50	17.76							15
16	71.00	119.20	82.20	38.80	24.50	17.28							16
17	73.00	125.50	75.40	37.20	25.50	17.76							17
18	72.30	134.00	70.20	37.20	25.50	16.80							18
19	70.00	152.00	68.90	35.50	25.50	16.80							19
20	69.30	166.00	70.20	35.50	26.50	16.36							20
21	67.50	182.00	76.70	35.50	26.50	16.80							21
22	67.50	198.00	83.50	34.00	26.50	15.92							22
23	68.10	255.00	101.00	34.00	25.50	15.46							23
24	72.90	252.50	114.00	30.40	24.50	14.50							24
25	74.30	241.00	118.20	30.40	23.70	14.50							25
26	74.70	230.00	104.00	32.20	23.70	14.50							26
27	75.00	226.00	95.00	30.40	23.10	13.60							27
28	77.00	219.50	92.00	26.80	22.50	13.60							28
29	78.50		85.00	21.80	21.90	13.00							29
30	79.70		82.20	25.00	22.50	13.60							30
31	80.80		75.40		22.50								31
TOTAL	2,628.30	4,363.90	4,299.20	1,316.00	744.70	526.86							
AVERAGE	84.78	155.85	138.68	43.86	24.02	17.56							

Annual Total ( )

DISCHARGE (3) STATION PTE. MALAVILLAS

COATA RIVER, IN THE BASIN OF ELEVATION 3,828 m UNIT cu.m.s. YEAR 1956

DATE	JAN.	FEB.	MAR.	APR.	MAY	JUNE	JULY	AUG.	SEPT.	OCT.	NOV.	DEC.	DATE
1	5.72	7.73	5.15	3.90	3.05	2.60	2.44	2.39	2.40	2.47	4.45	3.85	1
2	6.87	7.82	5.15	3.85	3.00	2.60	2.44	2.39	2.41	2.47	4.45	3.85	2
3	10.80	9.11	5.00	3.85	3.00	2.60	2.44	2.39	2.41	2.47	4.45	3.85	3
4	11.12	11.98	4.95	3.80	3.00	2.60	2.44	2.39	2.42	2.48	4.45	3.85	4
5	9.47	15.63	4.80	3.75	2.95	2.57	2.44	2.38	2.42	2.48	4.45	3.85	5
6	8.52	15.63	4.83	3.75	2.90	2.57	2.44	2.38	2.42	2.48	4.45	3.85	6
7	6.35	14.44	4.87	3.75	2.90	2.55	2.44	2.38	2.42	2.48	4.45	3.85	7
8	8.40	15.88	4.55	3.67	2.90	2.53	2.44	2.38	2.43	2.48	4.45	3.82	8
9	11.75	16.85	4.55	3.62	2.85	2.53	2.43	2.38	2.43	2.49	4.23	3.66	9
10	12.47	16.37	4.45	3.62	2.85	2.53	2.43	2.38	2.43	2.49	4.17	3.75	10
11	13.55	14.67	4.45	3.57	2.85	2.52	2.43	2.38	2.43	2.49	4.17	3.71	11
12	12.20	12.90	4.30	3.57	2.85	2.51	2.43	2.38	2.43	2.49	4.17	3.65	12
13	10.10	10.72	4.30	3.50	2.85	2.51	2.43	2.38	2.43	2.49	4.17	3.62	13
14	9.05	7.90	4.30	3.50	2.85	2.50	2.43	2.38	2.43	2.50	4.17	3.62	14
15	7.20	7.02	4.30	3.50	2.85	2.49	2.43	2.38	2.43	2.51	4.12	3.62	15
16	5.55	6.65	4.30	3.40	2.80	2.48	2.43	2.38	2.43	2.51	4.12	3.62	16
17	4.93	7.35	4.30	3.40	2.80	2.48	2.43	2.38	2.43	2.51	4.07	3.62	17
18	4.93	7.90	4.30	3.40	2.77	2.48	2.43	2.38	2.43	2.51	4.07	3.62	18
19	6.52	7.05	4.30	3.40	2.75	2.48	2.43	2.38	2.43	2.52	4.07	3.62	19
20	6.80	6.67	4.45	3.35	2.72	2.48	2.43	2.38	2.43	2.52	4.07	3.62	20
21	6.90	6.17	4.45	3.30	2.72	2.47	2.43	2.38	2.43	2.53	4.07	3.85	21
22	5.85	6.10	4.30	3.30	2.72	2.45	2.43	2.38	2.43	2.53	4.07	3.85	22
23	6.17	6.12	4.17	3.25	2.70	2.45	2.43	2.38	2.43	2.53	4.03	3.95	23
24	6.70	5.95	4.17	3.25	2.70	2.45	2.42	2.39	2.43	2.55	4.03	3.95	24
25	7.55	5.75	4.17	3.20	2.70	2.45	2.41	2.39	2.43	2.57	4.00	3.95	25
26	8.85	5.57	4.17	3.20	2.67	2.45	2.41	2.40	2.43	2.57	3.95	3.95	26
27	7.65	5.47	4.12	3.15	2.65	2.45	2.41	2.40	2.43	2.57	3.95	3.92	27
28	7.85	5.47	4.07	3.10	2.65	2.45	2.41	2.40	2.43	2.60	3.95	3.92	28
29	6.42	6.05	4.07	3.10	2.62	2.45	2.41	2.41	2.43	2.60	3.90	4.07	29
30	5.75		4.00	3.10	2.62	2.45	2.40	2.41	2.43	2.60	3.90	4.07	30
31	5.95		3.95		2.60		2.40	2.40		2.60		4.10	31
TOTAL	249.99	272.98	137.28	104.12	86.87	75.14	75.24	73.98	72.79	78.12	125.17	118.18	
AVERAGE	8.06	9.41	4.42	3.47	2.80	2.50	2.42	2.38	2.42	2.52	4.17	3.81	

Annual Total (cu.m.s.-day) 1,469.904

DISCHARGE (3) STATION PTE. MALAVILLAS

COATA RIVER, IN THE BASIN OF ELEVATION 3,828 m UNIT cu.m.s. YEAR 1957

DATE	JAN.	FEB.	MAR.	APR.	MAY	JUNE	JULY	AUG.	SEPT.	OCT.	NOV.	DEC.	DATE
1	4.15	10.90	7.90	10.15	6.35	4.80	4.15	2.80	1.95	1.10	0.90	0.67	1
2	4.57	12.70	8.15	10.00	6.45	4.75	4.10	2.70	1.95	1.10	0.95	0.67	2
3	5.85	15.60	9.00	9.50	6.35	4.70	4.10	2.80	1.95	1.10	0.95	0.67	3
4	6.10	15.05	10.60	10.05	6.25	4.70	4.10	2.70	1.95	1.05	0.95	0.65	4
5	5.35	13.15	10.85	9.75	6.75	4.65	4.15	2.80	1.85	1.05	0.95	0.65	5
6	5.35	10.85	11.40	8.90	6.15	4.60	4.30	2.70	1.85	1.05	0.95	0.55	6
7	5.35	9.00	10.25	8.30	6.00	4.65	4.30	2.65	1.75	1.00	0.90	0.55	7
8	5.20	8.60	9.40	7.85	5.85	4.70	4.20	2.65	1.70	1.00	0.90	0.55	8
9	4.80	9.30	8.85	7.65	5.75	4.70	4.20	2.55	1.70	1.05	0.90	0.55	9
10	4.65	11.50	8.50	7.40	5.35	4.70	4.20	2.55	1.55	1.05	0.55	0.55	10
11	4.45	13.65	8.00	7.10	5.15	4.65	4.15	2.50	1.55	1.05	0.80	0.52	11
12	4.45	15.75	7.65	7.25	5.35	4.65	4.10	2.50	1.45	1.05	0.80	0.52	12
13	4.45	19.40	7.45	7.00	5.15	4.50	4.10	2.40	1.45	1.00	0.80	0.50	13
14	4.65	20.60	8.05	6.95	5.35	4.45	4.05	2.40	1.45	1.00	0.85	0.45	14
15	4.95	20.05	8.35	7.00	5.15	4.45	4.05	2.40	1.45	1.00	0.85	0.45	15
16	5.25	18.80	7.85	7.10	5.35	4.45	4.00	2.35	1.45	1.00	0.85	0.42	16
17	5.20	17.00	7.30	7.10	5.15	4.45	4.00	2.30	1.45	1.00	0.85	0.45	17
18	5.00	15.60	7.00	6.95	5.35	4.65	3.92	2.25	1.45	0.95	0.85	0.45	18
19	4.80	13.20	6.85	6.85	5.15	4.60	3.87	2.30	1.40	1.00	0.85	0.45	19
20	4.65	11.90	6.70	6.75	5.35	4.60	3.87	2.30	1.40	1.05	0.90	0.65	20
21	4.57	10.80	7.00	7.00	5.15	4.60	3.87	2.25	1.35	1.10	0.85	0.75	21
22	4.50	9.60	8.30	7.25	5.35	4.60	3.87	2.25	1.35	1.05	0.75	0.80	22
23	4.50	9.15	8.90	7.45	5.15	4.60	3.87	2.20	1.25	1.00	0.80	0.95	23
24	4.40	8.75	10.90	7.30	4.95	4.60	3.80	2.20	1.30	0.95	0.75	1.15	24
25	4.40	8.00	12.45	7.00	4.95	4.50	3.15	2.20	1.30	1.00	0.75	1.75	25
26	4.35	7.65	11.30	6.85	4.95	4.50	3.10	2.10	1.20	0.95	0.75	2.90	26
27	4.40	7.30	10.30	6.75	4.85	4.45	3.00	2.10	1.20	0.95	0.75	4.50	27
28	4.75	7.55	10.25	6.65	4.85	4.35	2.90	2.00	1.15	0.95	0.65	6.95	28
29	5.00		10.40	6.50	4.85	4.20	2.90	2.00	1.15	0.90	0.65	8.70	29
30	6.10		9.90	6.00	4.85	4.15	2.80	2.00	1.15	0.85	0.65	7.70	30
31	6.10		10.00		4.80		2.80	2.00		0.80		6.90	31
TOTAL	152.25	351.40	279.80	228.35	167.95	136.95	118.00	73.90	45.10	31.15	24.95	54.00	
AVERAGE	4.91	12.55	9.02	7.61	5.41	4.56	3.80	2.38	1.50	1.00	0.83	1.74	

Annual Total (cu.m.s.-day) 1,663.800

DISCHARGE (3) STATION PTE. MALAVILLAS

COATA RIVER, IN THE BASIN OF ELEVATION 3,828 m UNIT cu.m.s. YEAR 1958

DATE	JAN.	FEB.	MAR.	APR.	MAY	JUNE	JULY	AUG.	SEPT.	OCT.	NOV.	DEC.	DATE
1	5.50	10.65	9.65	3.60	5.15	4.55	4.40	4.20	3.75	1.10	1.30	12.80	1
2	4.40	8.40	10.40	7.60	5.10	4.55	4.40	4.20	3.75	1.20	1.30	9.00	2
3	4.50	9.00	12.75	7.40	4.85	4.45	4.40	4.10	3.75	1.80	1.30	6.00	3
4	4.70	10.20	13.20	7.25	4.85	4.45	4.40	4.10	2.30	4.90	1.30	5.00	4
5	4.30	10.60	14.35	7.05	4.80	4.40	4.40	4.10	1.60	1.80	1.30	4.00	5
6	4.10	11.20	14.40	6.90	4.80	4.35	4.40	4.10	1.40	5.50	1.30	3.50	6
7	4.60	17.30	14.30	6.80	4.80	4.40	4.40	4.10	1.20	7.50	1.20	2.50	7
8	4.35	96.20	22.40	6.75	4.80	4.35	4.40	4.00	4.20	4.90	1.10	1.50	8
9	6.35	193.20	151.80	6.65	4.80	4.30	4.40	4.00	1.10	3.60	1.00	2.50	9
10	5.75	106.60	242.80	6.30	4.80	4.30	4.40	3.95	1.10	2.30	0.90	1.50	10
11	4.90	14.50	278.40	6.20	4.80	4.30	4.40	3.95	1.15	1.80	0.90	1.50	11
12	4.35	11.25	282.20	6.05	4.80	5.20	4.40	3.95	1.10	1.60	1.30	1.50	12
13	3.80	9.80	276.30	6.00	4.90	5.00	4.40	3.90	1.05	1.20	1.30	1.40	13
14	3.40	9.20	252.70	5.95	4.95	5.00	4.40	3.90	1.05	1.10	1.30	1.30	14
15	3.30	12.40	168.80	5.90	4.95	5.00	4.40	3.90	1.05	1.10	1.10	1.30	15
16	3.60	16.10	58.30	5.80	4.90	4.70	4.40	3.85	1.00	1.20	1.10	1.40	16
17	5.40	129.20	17.40	5.70	4.90	4.70	4.40	3.85	1.00	1.10	1.10	1.30	17
18	8.20	131.80	13.70	5.65	4.90	4.70	4.40	3.85	1.05	2.30	0.90	1.30	18
19	8.43	92.00	12.90	5.60	4.90	4.70	4.40	3.90	1.05	1.80	1.10	1.30	19
20	9.15	34.30	12.70	5.55	4.85	4.70	4.40	3.90	1.10	1.80	1.30	1.50	20
21	10.20	13.25	11.75	5.55	4.85	4.50	4.40	3.90	1.10	1.80	4.50	1.50	21
22	11.25	12.35	10.60	5.05	4.80	4.50	4.40	3.85	1.10	1.60	4.00	2.50	22
23	11.60	13.20	10.00	5.60	4.80	4.50	4.40	3.85	1.20	1.60	4.00	8.00	23
24	9.15	12.05	9.40	5.60	4.75	4.50	4.40	3.85	1.10	1.20	4.50	8.50	24
25	8.90	11.25	9.80	5.55	4.75	4.50	4.20	3.85	1.20	1.20	3.50	8.00	25
26	6.15	12.35	9.75	5.55	4.60	4.50	4.20	3.85	1.15	1.20	3.50	7.00	26
27	5.10	13.65	8.85	5.55	4.60	4.50	4.10	3.80	1.10	1.20	3.50	7.00	27
28	4.75	11.20	8.85	5.45	4.60	4.40	4.10	3.75	1.00	1.20	3.50	10.60	28
29	6.55		8.40	5.45	4.55	4.40	4.10	3.75	1.00	1.20	4.50	20.50	29
30	10.40		7.90	5.40	4.55	4.40	4.10	3.80	1.00	1.80	15.00	17.20	30
31	13.25		7.65		4.55		4.20	3.80		1.80		15.00	31
TOTAL	200.40	1,003.20	1,982.40	183.45	149.00	136.80	134.60	121.85	42.70	65.40	73.90	167.90	
AVERAGE	6.46	36.90	63.94	6.11	4.80	4.56	4.34	3.93	1.42	2.11	2.46	5.41	

Annual Total (cu.m.s.-day 4,201.600

DISCHARGE (3) STATION PTE. MALAVILLAS

COATA RIVER, IN THE BASIN OF ELEVATION 3,828 m UNIT cu.m.s YEAR 1959

DATE	JAN.	FEB.	MAR.	APR.	MAY	JUNE	JULY	AUG.	SEPT.	OCT.	NOV.	DEC.	DATE
1	9.00	21.60	33.50	65.00	15.40	5.60	4.20	2.87	2.50	1.25	1.00	1.50	1
2	8.00	21.60	31.50	96.50	14.50	4.20	3.50	2.87	2.50	1.25	1.00	2.70	2
3	6.00	17.20	32.50	117.50	13.75	4.20	3.50	2.87	2.50	1.25	0.90	4.20	3
4	6.00	12.80	45.00	95.00	13.00	4.20	3.50	8.87	2.50	1.25	0.90	4.90	4
5	4.50	10.60	95.00	80.40	13.00	4.20	3.50	2.87	2.50	1.00	0.90	11.50	5
6	4.50	9.00	125.00	71.30	13.00	3.50	3.50	2.33	2.50	1.25	0.90	70.00	6
7	3.50	9.50	165.00	68.75	13.00	3.50	3.50	2.33	2.50	2.00	0.90	51.25	7
8	3.50	18.30	185.00	70.00	13.00	3.50	3.50	2.33	2.50	2.00	0.90	39.25	8
9	3.50	33.70	205.00	58.75	12.25	3.41	3.50	2.33	2.50	2.50	0.90	29.50	9
10	3.50	33.70	209.00	67.50	11.50	3.41	3.41	2.33	2.00	2.00	1.00	19.90	10
11	4.50	31.50	255.00	72.60	10.00	3.41	3.41	2.33	2.00	1.50	0.90	16.30	11
12	4.50	34.80	345.00	77.80	11.50	3.41	3.41	2.87	2.00	2.00	0.90	13.00	12
13	3.50	39.20	365.00	84.20	11.50	2.87	3.41	2.87	2.00	2.00	0.90	10.75	13
14	19.40	28.20	345.00	86.60	11.50	2.87	3.41	2.87	2.00	1.50	0.90	10.00	14
15	39.20	26.00	317.00	76.50	11.50	2.87	3.41	2.87	1.50	1.50	0.90	8.50	15
16	53.50	27.10	253.00	66.25	11.50	3.41	3.41	2.87	1.50	2.00	0.90	8.50	16
17	52.40	26.00	173.00	61.25	11.50	3.41	3.41	2.33	1.50	1.50	0.90	10.00	17
18	34.80	21.60	141.00	60.00	11.50	2.87	3.41	2.33	1.50	1.50	0.90	25.50	18
19	18.30	19.40	119.00	50.00	11.50	2.87	3.41	2.33	1.50	1.50	1.00	62.50	19
20	12.80	26.00	107.00	42.70	11.50	2.87	2.87	2.33	1.50	1.25	1.00	55.00	20
21	10.60	41.40	96.50	35.80	11.50	2.87	3.41	2.87	2.00	1.25	1.00	60.00	21
22	9.00	56.80	90.20	29.50	10.75	2.87	3.41	2.87	2.00	1.00	1.00	51.25	22
23	7.00	87.60	80.40	26.50	10.75	4.20	3.41	2.87	2.00	1.00	1.00	52.50	23
24	6.00	92.00	75.20	23.50	10.75	4.20	3.41	2.87	2.00	1.00	1.00	92.60	24
25	4.00	70.00	70.00	21.70	10.75	4.20	2.87	2.87	2.00	1.00	1.00	95.00	25
26	3.50	59.00	60.00	19.90	10.75	4.20	2.87	2.87	2.00	1.00	1.00	107.00	26
27	3.50	48.00	55.00	18.10	10.75	4.20	2.87	2.33	2.00	1.00	1.00	133.00	27
28	4.50	45.80	51.25	18.10	10.75	4.20	2.87	2.33	2.00	1.00	1.00	180.00	28
29	1.50		50.00	17.20	10.75	4.20	2.87	2.33	1.50	1.00	1.00	160.00	29
30	9.50		48.75	16.30	10.00	3.50	2.87	2.38	1.50	1.00	1.00	150.00	30
31	16.10		50.00		8.50		2.87	2.33		1.00		130.00	31
TOTAL	377.10	968.40	4,273.80	1,695.20	361.90	109.22	102.90	80.87	60.50	43.25	28.50	1,646.10	
AVERAGE	12.16	34.58	137.86	56.50	11.67	3.64	3.31	2.60	4.01	1.39	0.95	53.10	

Annual Total (cu.m.s.-day) 8,747.740

DISCHARGE (3) STATION PTE. MALAVILLAS

COATA RIVER IN THE BASIN OF ELEVATION 3,828 m UNIT cu.m.s. YEAR 1960

DATE	JAN.	FEB.	MAR.	APR.	MAY	JUNE	JULY	AUG.	SEPT.	OCT.	NOV.	DEC.	DATE
1	141.02	214.30	90.00	55.00	22.60	11.50	8.50	2.30	2.30	5.00	4.90	80.00	1
2	137.48	214.30	76.25	82.50	19.90	11.50	8.50	2.30	2.70	5.00	5.60	62.00	2
3	132.76	240.50	76.25	95.00	19.90	11.50	7.75	2.30	2.70	5.00	9.20	50.00	3
4	143.38	236.40	67.50	75.00	19.90	11.50	7.75	2.70	3.10	3.50	10.00	45.00	4
5	163.44	292.20	60.00	67.50	19.90	11.50	7.75	2.70	2.30	3.50	10.00	53.00	5
6	165.80	71.80	55.00	51.25	19.00	10.75	7.75	3.10	2.30	3.50	10.00	56.00	6
7	155.18	49.28	50.00	45.00	18.10	10.00	7.75	3.10	2.70	3.10	9.20	53.00	7
8	133.94	142.20	47.50	39.25	17.20	10.00	7.75	3.10	2.30	3.10	8.50	45.00	8
9	103.26	118.60	45.00	33.50	16.30	10.75	7.75	3.10	2.30	3.10	7.70	47.00	9
10	118.60	107.98	42.70	31.50	16.30	10.75	7.00	3.10	2.30	2.90	8.50	40.40	10
11	137.48	99.72	40.40	33.50	17.20	10.75	7.00	3.50	2.70	2.90	8.50	40.40	11
12	173.00	88.75	38.10	30.50	18.10	10.00	7.00	3.50	3.10	2.50	9.20	35.80	12
13	181.40	87.50	35.80	25.50	19.00	10.00	7.00	3.10	3.10	2.50	10.00	30.50	13
14	214.30	90.00	33.50	32.50	17.20	10.00	7.00	4.20	3.10	2.50	10.00	29.50	14
15	223.40	98.54	31.50	38.10	17.20	10.00	7.00	4.20	3.10	2.50	10.00	28.00	15
16	174.20	130.40	31.50	33.50	16.30	10.00	7.00	4.20	3.50	2.80	10.75	25.00	16
17	165.80	193.40	29.50	30.50	16.30	10.00	6.30	4.20	3.50	2.80	26.50	22.00	17
18	175.40	223.40	27.50	27.50	15.40	10.00	6.30	3.50	4.20	2.80	35.80	20.80	18
19	198.20	200.60	25.50	25.50	15.40	10.00	5.60	3.50	4.20	2.80	27.50	19.90	19
20	194.60	161.08	23.50	25.50	14.50	10.00	5.60	3.50	5.60	3.00	27.50	18.00	20
21	187.40	144.56	21.70	28.50	14.50	10.00	5.60	3.10	5.60	3.00	27.50	16.00	21
22	215.60	128.04	20.80	30.50	14.50	9.25	5.60	3.10	5.60	2.50	23.50	14.50	22
23	205.55	113.88	21.70	30.50	13.00	9.25	5.60	3.10	4.90	2.50	20.80	14.50	23
24	209.30	106.80	21.70	29.50	13.00	9.25	5.60	2.70	4.90	2.50	19.00	13.00	24
25	185.00	99.72	25.50	28.50	13.00	9.25	5.60	2.70	7.00	2.00	24.50	13.00	25
26	165.80	92.50	31.50	25.50	13.00	8.50	5.60	2.70	7.00	2.00	65.00	13.00	26
27	154.00	83.25	27.50	23.50	13.00	8.50	4.90	2.30	7.75	2.00	76.25	13.50	27
28	167.00	80.00	25.50	23.50	13.00	8.50	4.90	2.30	8.50	2.00	120.00	15.00	28
29	200.60	75.00	23.50	23.50	13.00	8.50	4.90	2.70	8.50	3.50	120.00	19.00	29
30	216.90		23.50	22.60	12.25	8.50	4.90	2.30	8.50	4.00	95.00	25.00	30
31	224.70		20.80		12.25		4.90	2.30		5.00		28.50	31
TOTAL	5,364.49	4,184.70	1,170.70	1,144.20	500.20	300.00	202.15	94.50	129.35	95.80	850.90	978.30	
AVERAGE	173.04	143.30	37.76	38.14	16.13	10.00	6.52	3.04	4.31	3.09	28.36	31.55	

Annual Total (cu.m.s.-day 15,015.290

DISCHARGE (3) STATION PTE. MALAVILLAS

COATA RIVER, IN THE BASIN OF ELEVATION 3,828 m UNIT cu.m.s. YEAR 1961

DATE	JAN.	FEB.	MAR.	APR.	MAY	JUNE	JULY	AUG.	SEPT.	OCT.	NOV.	DEC.	DATE
1	26.08	150.00	153.50	153.50	46.00	24.12	9.88	6.84	6.08	6.84	4.56	27.06	1
2	28.04	150.00	153.80	123.00	42.80	22.16	10.64	6.84	6.08	6.84	4.56	26.08	2
3	80.20	150.00	123.00	110.80	42.80	20.20	10.64	6.84	6.08	6.84	3.80	20.20	3
4	129.10	153.50	123.00	110.80	42.80	20.20	10.64	6.84	5.32	6.08	3.80	18.44	4
5	129.10	153.50	107.75	107.75	42.80	9.32	9.88	6.84	5.32	6.84	3.80	16.68	5
6	129.10	153.50	110.80	95.55	42.60	19.32	9.88	6.84	5.32	6.08	3.80	14.92	6
7	129.10	160.00	110.80	92.50	39.04	19.32	9.88	6.84	5.32	5.32	3.80	13.16	7
8	116.90	160.00	104.70	74.20	39.06	18.44	9.88	6.84	5.32	5.32	3.80	12.28	8
9	74.20	160.00	104.70	62.00	39.08	18.44	9.88	6.84	5.32	6.08	3.80	11.40	9
10	41.20	160.00	98.60	62.00	36.42	12.28	9.88	6.08	6.08	6.08	9.12	9.88	10
11	38.00	153.50	92.50	55.60	36.42	16.68	9.12	6.08	6.08	6.08	9.12	11.40	11
12	38.00	140.00	92.50	62.00	34.84	16.68	9.12	6.08	6.08	5.32	8.36	14.92	12
13	36.40	140.00	107.75	77.25	33.16	16.68	9.12	6.08	6.08	5.32	10.64	20.20	13
14	30.00	150.00	123.00	92.50	30.18	16.68	9.12	6.08	6.84	3.80	10.64	29.02	14
15	25.10	155.00	123.00	92.50	30.00	16.68	8.36	6.08	6.84	4.56	10.64	47.60	15
16	24.12	158.00	168.75	123.00	30.00	15.80	8.36	6.84	6.08	4.56	9.12	62.00	16
17	22.16	160.00	168.75	123.00	34.80	14.92	8.36	6.84	6.84	5.32	8.36	42.80	17
18	20.20	160.00	212.56	110.80	38.00	14.04	7.60	6.84	6.84	4.56	13.16	46.00	18
19	48.44	162.65	312.75	104.70	39.60	13.16	7.60	6.84	6.84	4.56	21.18	54.00	19
20	26.08	162.65	412.50	104.70	42.80	13.16	7.60	6.84	6.84	3.80	30.00	92.50	20
21	34.80	168.75	441.00	98.60	46.00	12.28	7.60	6.84	6.84	3.80	36.40	123.00	21
22	33.20	168.75	469.50	92.50	46.00	12.28	6.84	6.84	6.84	3.80	27.06	153.50	22
23	30.00	162.65	441.00	92.50	42.80	12.28	7.60	6.84	6.84	3.80	20.20	212.56	23
24	42.80	162.65	412.50	92.50	38.00	12.28	6.84	6.84	6.84	3.80	19.32	241.36	24
25	162.65	160.00	412.50	80.30	31.60	12.28	6.84	6.84	6.84	6.08	39.60	218.32	25
26	162.00	160.00	401.10	74.20	31.60	12.28	6.84	6.84	6.84	7.60	49.20	264.16	26
27	160.00	153.50	384.00	68.10	28.04	12.28	6.84	6.84	6.84	9.88	57.20	212.56	27
28	153.50	150.00	298.50	62.00	28.04	11.40	6.84	6.84	6.84	9.12	46.00	235.60	28
29	153.50		241.36	46.00	26.08	11.40	6.84	6.08	6.84	6.84	33.29	327.00	29
30	150.00		168.75	46.00	24.12	11.40	6.84	6.08	6.84	6.84	26.08	327.00	30
31	150.00		153.50		24.12		6.84	6.08		5.32		298.50	31
TOTAL	2,404.01	4,378.60	6,828.12	2,690.85	1,129.80	468.44	261.66	205.20	190.00	177.08	530.32	3,204.10	
AVERAGE	77.54	156.37	220.26	89.69	36.44	15.61	8.44	6.61	6.33	5.71	17.67	103.35	

Annual Total (cu.m.s.-day) 22,468.18

DISCHARGE (3) STATION PTE. MALAVILIAS

COATA RIVER, IN THE BASIN OF ELEVATION 3,828 m UNIT cu.m.s. YEAR 1962

DATE	JAN.	FEB.	MAR.	APR.	MAY	JUNE	JULY	AUG.	SEPT.	OCT.	NOV.	DEC.	DATE
1	182.00	209.50	150.00	143.20	44.40	17.20	12.00	11.00	5.00	7.00	5.20	3.20	1
2	182.00	233.40	182.00	137.80	44.40	22.70	12.00	11.00	5.00	6.70	5.20	3.50	2
3	237.00	305.00	259.20	126.00	42.20	28.70	12.00	11.00	5.00	6.50	5.20	3.50	3
4	242.40	378.00	337.50	119.00	41.10	28.80	12.00	11.00	6.00	6.50	4.50	5.25	4
5	276.00	402.00	325.00	111.00	40.00	28.80	12.00	6.00	7.00	6.25	4.20	7.50	5
6	237.00	390.00	285.60	99.10	10.00	28.80	12.00	6.00	9.00	6.25	3.60	10.50	6
7	237.00	384.00	219.00	97.10	35.80	27.40	12.00	6.00	9.00	6.00	3.60	12.50	7
8	217.10	441.60	209.50	78.80	35.80	27.40	11.00	6.00	9.00	6.00	3.60	12.00	8
9	240.60	433.20	200.00	58.80	34.40	27.40	12.00	7.00	9.00	5.86	3.50	12.00	9
10	255.00	335.00	188.00	54.90	34.40	16.10	12.00	7.00	8.00	5.86	3.50	13.50	10
11	198.20	237.00	191.00	53.60	34.40	15.00	12.00	7.00	7.00	5.86	4.00	12.50	11
12	192.80	200.00	209.50	46.60	34.40	15.00	12.00	6.00	7.00	6.00	4.00	12.50	12
13	192.80	175.20	182.00	44.40	34.40	15.00	12.00	5.00	7.00	6.00	4.00	15.00	13
14	200.00	157.50	182.00	52.30	33.00	16.10	12.00	5.00	7.00	5.00	4.25	48.00	14
15	209.50	148.30	182.00	77.40	33.00	16.10	12.00	5.00	7.00	4.40	4.50	62.00	15
16	215.20	134.70	178.60	76.00	31.60	16.10	11.00	5.00	6.00	4.40	4.50	67.90	16
17	219.00	124.60	171.80	76.00	31.60	12.00	11.00	5.00	8.00	4.40	4.50	69.00	17
18	229.80	121.80	141.50	76.00	31.60	11.00	11.00	5.00	8.00	4.40	4.50	51.00	18
19	235.20	117.40	130.20	73.60	31.60	11.00	12.00	5.00	8.00	4.40	4.50	37.50	19
20	219.00	119.00	127.40	72.40	27.40	12.00	12.00	5.00	9.00	4.40	4.50	33.75	20
21	120.00	130.20	119.00	71.20	26.60	12.00	12.00	5.00	9.00	5.00	4.50	56.00	21
22	115.80	133.00	126.00	42.20	26.60	12.00	12.00	5.00	9.00	7.40	4.50	106.00	22
23	97.80	133.00	146.60	56.20	26.60	12.00	11.00	5.00	9.00	7.40	4.25	107.50	23
24	96.50	146.60	115.80	53.60	26.60	12.00	12.00	5.00	9.00	8.50	4.00	104.00	24
25	130.20	150.00	106.20	52.30	26.60	11.00	12.00	5.00	9.00	8.50	3.00	120.00	25
26	226.20	182.00	127.40	52.30	26.60	11.00	12.00	5.00	9.00	8.00	3.00	111.50	26
27	251.40	150.00	165.00	51.00	23.80	12.00	12.00	5.00	9.00	6.30	3.05	91.50	27
28	215.20	141.50	143.20	48.80	19.40	12.00	11.00	5.00	8.00	6.30	3.10	87.00	28
29	194.60		143.20	46.60	19.40	12.00	11.00	5.00	8.00	5.70	3.10	77.50	29
30	194.60		153.00	42.20	17.20	11.00	11.00	5.00	8.00	5.70	3.20	75.00	30
31	194.60		159.00		17.20		11.00	5.00		5.20		82.00	31
TOTAL	6,254.50	6,213.50	5,550.20	2,194.40	912.10	515.60	363.00	190.00	233.00	186.18	121.05	1,510.60	
AVERAGE	201.75	221.91	179.03	73.14	31.35	17.18	11.70	6.12	7.75	6.00	4.03	48.72	

Annual Total (cu.m.s.-day) 24,304.130

DISCHARGE (3) STATION PTE. MALAVILLAS

COATA RIVER, IN THE BASIN OF ELEVATION 3,828 m UNIT cu.m.s. YEAR 1963

DATE	JAN.	FEB.	MAR.	APR.	MAY	JUNE	JULY	AUG.	SEPT.	OCT.	NOV.	DEC.	DATE
1	85.90	299.70	388.80	141.60	71.20	34.00	16.95	12.75	9.60	9.60	12.75	13.80	1
2	89.60	320.40	422.60	128.00	67.60	15.90	16.95	12.75	8.55	9.60	13.80	13.80	2
3	68.80	299.70	453.80	119.00	65.20	21.60	16.95	12.75	8.55	9.60	15.90	14.85	3
4	58.00	270.60	407.00	119.00	62.80	20.40	16.95	11.70	8.55	9.60	15.90	19.20	4
5	66.80	234.00	313.20	119.00	61.60	20.40	15.90	11.70	8.55	9.60	15.90	21.60	5
6	128.00	224.00	277.80	116.00	60.40	20.40	15.90	11.70	8.55	9.60	15.90	21.60	6
7	129.70	220.00	252.60	122.00	61.60	19.20	15.90	11.70	8.55	10.65	15.90	28.80	7
8	138.20	192.00	226.00	116.00	59.20	18.00	15.90	11.70	8.55	13.80	15.90	34.40	8
9	145.00	169.20	265.80	110.40	56.80	21.60	15.90	11.70	8.55	25.20	15.90	87.70	9
10	141.60	214.00	310.80	109.10	56.80	24.00	15.90	11.70	8.55	30.00	15.90	47.60	10
11	151.80	216.00	320.40	107.80	55.60	25.20	15.90	11.70	8.55	30.00	15.90	59.20	11
12	123.40	176.40	293.40	100.00	54.40	25.20	15.90	11.70	9.60	30.00	15.90	66.40	12
13	105.20	162.00	248.40	94.80	48.70	24.00	14.85	11.70	9.60	30.00	15.90	68.80	13
14	103.90	206.00	218.00	100.00	43.20	22.80	13.80	11.70	9.60	30.00	15.90	20.40	14
15	123.40	232.00	234.00	94.80	43.20	22.80	13.80	11.70	9.60	27.60	14.85	71.20	15
16	145.00	224.00	236.00	948.00	42.10	21.60	13.80	11.70	9.60	21.60	13.80	111.70	16
17	162.00	200.00	252.00	93.50	39.90	21.60	13.80	11.70	9.60	20.40	13.80	143.30	17
18	180.00	234.00	202.00	90.90	38.80	20.40	13.80	11.70	9.60	19.20	13.80	172.80	18
19	210.00	208.00	188.00	82.60	36.60	20.40	13.80	11.70	9.60	18.00	12.75	113.00	19
20	169.20	202.00	202.00	79.30	35.50	20.40	13.80	11.70	9.60	18.00	12.75	81.50	20
21	143.30	192.00	188.00	80.40	34.40	20.40	13.80	11.70	9.60	16.95	12.75	67.60	21
22	119.50	238.00	172.80	107.80	32.20	20.40	13.80	11.70	9.60	15.90	12.75	55.60	22
23	129.70	265.80	162.00	107.80	31.10	20.40	13.80	11.70	9.60	15.90	12.75	56.80	23
24	116.90	280.20	146.70	92.20	30.00	20.40	13.80	10.65	9.60	15.90	14.85	55.60	24
25	141.60	337.50	136.50	89.60	28.80	20.40	13.80	10.65	9.60	15.90	15.90	48.70	25
26	232.00	381.00	128.00	85.90	27.60	20.40	13.80	10.65	9.60	16.95	15.90	43.20	26
27	275.40	412.20	128.00	84.80	27.60	20.40	13.80	9.60	9.60	13.80	15.90	56.80	27
28	275.40	404.40	134.80	82.60	27.60	18.00	12.75	9.60	9.60	13.80	14.85	89.60	28
29	261.00		141.60	78.20	27.60	15.90	12.75	9.60	9.60	13.80	13.80	81.50	29
30	236.00		138.20	76.00	26.40	16.95	12.75	9.60	9.60	12.75	13.80	73.60	30
31	236.00		141.60		25.20		12.75	9.60		12.75		70.00	31
TOTAL	4,692.30	7,005.10	7,330.80	3,023.90	1,379.70	623.55	454.05	352.20	277.50	546.45	442.35	1,860.65	
AVERAGE	151.36	250.18	236.47	108.79	44.50	20.78	14.64	11.36	9.25	17.62	14.74	60.02	

Annual Total (cu.m.s.-day) 27,988.550

DISCHARGE (3) STATION PTE. MALAVILLAS

COATA RIVER, IN THE BASIN OF _____ ELEVATION 3,828 m UNIT cu. m. s. YEAR 1964

DATE	JAN.	FEB.	MAR.	APR.	MAY	JUNE	JULY	AUG.	SEPT.	OCT.	NOV.	DEC.	DATE
1	70.00	15.80	31.55	64.00	26.80	16.60	10.20	7.00	3.00	2.50	3.90	3.88	1
2	60.40	15.80	29.65	51.70	25.85	16.60	10.20	7.00	3.00	2.50	3.90	3.88	2
3	49.80	19.00	28.70	45.95	24.90	15.80	10.20	7.00	3.00	2.50	3.90	3.88	3
4	44.30	23.00	26.80	42.50	23.00	15.00	10.20	7.00	3.00	2.60	3.90	3.88	4
5	32.50	25.85	26.80	42.50	22.20	15.00	9.40	7.00	3.00	2.60	4.00	3.88	5
6	32.50	31.55	29.65	38.50	22.20	14.20	9.40	7.00	2.88	2.60	4.00	3.90	6
7	31.55	43.65	29.65	35.50	21.40	13.40	8.60	7.00	2.88	2.50	4.00	3.90	7
8	30.60	42.50	29.65	34.50	19.80	14.20	8.60	7.00	2.88	2.60	3.90	3.90	8
9	41.50	56.50	35.50	39.50	19.80	14.20	8.60	6.20	2.88	2.60	3.90	3.90	9
10	43.65	61.50	66.50	37.50	19.80	13.40	8.60	6.20	2.88	2.60	4.00	4.00	10
11	42.50	44.80	56.50	32.50	19.80	13.40	7.80	6.20	3.00	2.50	4.00	4.00	11
12	42.50	41.50	57.75	32.50	19.80	13.40	8.60	6.20	3.00	2.45	4.40	4.15	12
13	39.50	43.65	60.25	31.55	19.80	13.40	8.60	6.20	3.00	2.45	4.40	4.40	13
14	35.50	86.50	60.25	29.65	19.00	11.00	8.60	6.20	3.00	2.45	5.00	4.40	14
15	31.55	100.60	75.25	26.80	18.20	12.60	7.80	6.20	3.00	2.35	4.50	4.40	15
16	28.70	127.70	74.00	25.85	18.20	12.60	7.80	6.20	3.00	2.35	4.50	4.44	16
17	26.80	130.60	84.00	24.90	16.60	12.60	7.80	6.20	3.00	2.28	4.50	4.40	17
18	26.80	138.15	91.50	24.90	16.60	11.80	7.80	6.20	3.00	2.28	4.35	11.00	18
19	23.00	117.55	104.50	24.90	16.60	10.20	7.80	6.20	3.00	2.28	4.20	13.00	19
20	20.60	101.90	113.20	26.80	16.60	10.20	7.80	6.20	2.60	2.35	4.20	13.00	20
21	19.80	90.25	98.00	42.50	17.40	10.20	7.80	6.20	2.60	2.35	4.20	10.50	21
22	19.00	75.25	96.70	47.10	17.40	10.20	7.00	5.40	2.60	2.35	4.00	10.50	22
23	18.20	59.00	126.25	42.50	17.40	10.20	7.00	7.00	2.75	2.35	3.90	8.50	23
24	18.20	49.40	116.10	38.50	20.60	10.20	7.00	7.00	2.75	2.35	3.90	8.50	24
25	18.20	43.65	135.05	34.50	21.40	10.20	7.00	7.00	2.90	2.35	3.75	10.50	25
26	18.20	42.50	91.50	30.60	19.80	10.20	7.80	7.00	2.90	2.28	3.75	15.00	26
27	17.40	42.50	87.75	30.60	19.00	10.20	7.80	7.00	2.60	2.28	3.65	15.20	27
28	16.60	38.50	87.75	29.65	18.20	10.20	7.80	7.00	2.20	2.28	3.65	15.20	28
29	16.60	35.50	86.50	28.70	17.40	10.20	7.00	7.00	2.50	2.28	3.75	15.20	29
30	15.80		91.50	27.75	17.40	10.20	7.80	7.00	2.50	2.28	3.88	13.00	30
31	15.80		81.50		16.60		7.80	7.00		2.28		11.00	31
TOTAL	948.05	1,744.65	2,210.25	1,064.90	609.55	371.60	256.20	205.00	85.30	74.77	121.88	239.25	
AVERAGE	30.58	60.16	71.29	35.49	19.66	12.38	8.26	6.61	2.84	2.41	4.06	7.71	

Annual Total (cu.m.s-day) 7,931.400

DISCHARGE (3) STATION PTE. MALAVILLAS

COATA RIVER, IN THE BASIN OF ELEVATION 3,828 m UNIT cu. m. s. YEAR 1964

DATE	JAN.	FEB.	MAR.	APR.	MAY	JUNE	JULY	AUG.	SEPT.	OCT.	NOV.	DEC.	DATE
1	70.00	15.80	31.55	64.00	26.80	16.60	10.20	7.00	3.00	2.50	3.90	3.88	1
2	60.40	15.80	29.65	51.70	25.85	16.60	10.20	7.00	3.00	2.50	3.90	3.88	2
3	49.80	19.00	28.70	45.95	24.90	15.80	10.20	7.00	3.00	2.50	3.90	3.88	3
4	44.30	23.00	26.80	42.50	23.00	15.00	10.20	7.00	3.00	2.60	3.90	3.88	4
5	32.50	25.85	26.80	42.50	22.20	15.00	9.40	7.00	3.00	2.60	4.00	3.88	5
6	32.50	31.55	29.65	38.50	22.20	14.20	9.40	7.00	2.88	2.60	4.00	3.90	6
7	31.55	43.65	29.65	35.50	21.40	13.40	8.60	7.00	2.88	2.50	4.00	3.90	7
8	30.60	42.50	29.65	34.50	19.80	14.20	8.60	7.00	2.88	2.60	3.90	3.90	8
9	41.50	56.50	55.50	39.50	19.80	14.20	8.60	6.20	2.88	2.60	3.90	3.90	9
10	43.65	61.50	66.50	37.50	19.80	13.40	8.60	6.20	2.88	2.60	4.00	4.00	10
11	42.50	44.80	56.50	32.50	19.80	13.40	7.80	6.20	3.00	2.50	4.00	4.00	11
12	42.50	41.50	57.75	32.50	19.80	13.40	8.60	6.20	3.00	2.45	4.40	4.15	12
13	39.50	43.65	60.25	31.55	19.80	13.40	8.60	6.20	3.00	2.45	4.40	4.40	13
14	35.50	86.50	60.25	29.65	19.00	11.00	8.60	6.20	3.00	2.45	5.00	4.40	14
15	31.55	100.60	75.25	26.80	18.20	12.60	7.80	6.20	3.00	2.35	4.50	4.40	15
16	28.70	127.70	74.00	25.85	18.20	12.60	7.80	6.20	3.00	2.35	4.50	4.40	16
17	26.80	130.60	84.00	24.90	16.60	12.60	7.80	6.20	3.00	2.28	4.35	4.40	17
18	26.80	138.15	91.50	24.90	16.60	11.80	7.80	6.20	3.00	2.28	4.35	11.00	18
19	23.00	117.55	104.50	24.90	16.60	10.20	7.80	6.20	3.00	2.28	4.20	13.00	19
20	20.60	101.90	113.20	26.80	16.60	10.20	7.80	6.20	2.60	2.35	4.20	13.00	20
21	19.80	90.25	98.00	42.50	17.40	10.20	7.80	6.20	2.60	2.35	4.20	10.50	21
22	19.00	75.25	96.70	47.10	17.40	10.20	7.00	5.40	2.60	2.35	4.00	10.50	22
23	18.20	59.00	126.25	42.50	17.40	10.20	7.00	7.00	2.75	2.35	3.90	8.50	23
24	18.20	49.40	116.10	38.50	20.60	10.20	7.00	7.00	2.75	2.35	3.90	8.50	24
25	18.20	43.65	135.05	34.50	21.40	10.20	7.00	7.00	2.90	2.35	3.75	10.50	25
26	18.20	42.50	91.50	30.60	19.80	10.20	7.80	7.00	2.90	2.28	3.75	15.00	26
27	17.40	42.50	87.75	30.60	19.00	10.20	7.80	7.00	2.60	2.28	3.65	15.20	27
28	16.60	38.50	87.75	29.65	18.20	10.20	7.80	7.00	2.20	2.28	3.65	15.20	28
29	16.60	35.50	86.50	28.70	17.40	10.20	7.00	7.00	2.50	2.28	3.75	15.20	29
30	15.80		91.50	27.75	17.40	10.20	7.80	7.00	2.50	2.28	3.88	13.00	30
31	15.80		81.50		16.60		7.80	7.00		2.28		11.00	31
TOTAL	948.05	1,744.65	2,210.25	1,064.90	609.55	371.60	256.20	205.00	85.30	74.77	121.88	239.25	
AVERAGE	30.58	60.16	71.29	35.49	19.66	12.38	8.26	6.61	2.84	2.41	4.06	7.71	

Annual Total (cu.m.s-day) 7,931.400

DISCHARGE (3) STATION PTE. MALAVILLAS

COATA RIVER, IN THE BASIN OF _____ ELEVATION 3,828 m UNIT cu. m. s. YEAR 1965

DATE	JAN.	FEB.	MAR.	APR.	MAY	JUNE	JULY	AUG.	SEPT.	OCT.	NOV.	DEC.	DATE
1	8.00	43.50	70.00	51.00	23.00	8.03	4.50	3.32	1.95	2.14	1.54	2.36	1
2	8.00	43.50	68.50	53.00	22.00	8.03	4.75	3.32	1.95	2.14	1.54	2.37	2
3	9.50	42.50	61.50	54.50	21.00	8.03	4.50	3.32	1.95	2.14	1.54	2.36	3
4	10.50	30.50	60.00	51.00	21.00	8.00	4.50	3.32	1.95	2.14	1.54	13.16	4
5	12.00	26.00	112.00	51.00	21.00	8.00	4.50	3.32	1.95	2.14	1.54	19.70	5
6	12.00	30.50	115.50	48.00	21.00	7.19	4.20	3.32	1.95	2.14	1.52	2.40	6
7	12.00	36.25	115.50	47.50	20.00	7.19	4.20	2.83	1.95	2.14	1.52	19.70	7
8	12.00	46.00	113.50	46.00	20.00	7.19	4.20	2.83	1.85	2.14	1.52	17.80	8
9	12.00	51.00	115.50	33.00	18.50	7.19	4.20	2.83	1.85	2.14	1.52	16.20	9
10	12.00	52.50	115.50	27.00	20.00	7.19	4.20	2.83	1.85	1.81	1.52	17.80	10
11	11.00	56.00	109.00	24.00	13.50	7.19	4.47	2.83	1.85	1.81	1.52	16.20	11
12	13.50	59.00	98.00	24.00	15.00	7.19	4.40	2.83	1.80	1.81	1.52	14.60	12
13	15.50	47.50	104.50	24.00	15.00	7.19	4.20	2.83	1.75	1.81	1.54	14.60	13
14	24.00	43.50	91.80	24.00	15.00	7.19	4.50	2.77	1.60	1.81	1.54	13.70	14
15	30.50	47.50	106.00	24.00	13.50	7.10	4.50	2.70	1.60	1.65	1.54	13.80	15
16	34.00	46.00	117.50	24.00	13.50	7.10	4.20	2.70	1.60	1.65	1.65	14.60	16
17	28.40	67.50	93.00	24.00	12.50	7.10	4.00	2.70	1.60	1.65	1.65	14.60	17
18	24.00	98.00	93.00	24.00	12.00	7.10	3.31	2.67	1.60	1.65	1.76	16.20	18
19	24.00	94.00	88.00	24.00	12.00	4.99	3.31	2.67	1.60	1.65	1.76	19.70	19
20	24.00	89.40	87.00	24.00	12.00	4.99	3.31	2.67	1.60	1.65	1.76	20.00	20
21	24.00	90.50	84.50	26.00	12.00	4.99	3.31	2.67	1.60	1.47	2.10	25.60	21
22	24.00	77.50	81.00	28.40	12.00	4.99	3.31	2.67	1.60	1.47	2.10	24.00	22
23	24.00	80.00	81.00	29.50	12.00	4.99	3.31	2.67	1.60	1.47	2.10	24.00	23
24	23.00	88.00	79.00	30.50	10.50	4.90	3.31	2.67	1.60	1.47	2.10	21.90	24
25	24.00	90.50	74.50	30.50	9.50	4.90	4.17	2.67	1.50	1.47	1.80	21.90	25
26	25.00	75.50	70.00	28.40	9.50	4.90	4.17	2.67	1.50	1.47	1.80	20.80	26
27	25.00	72.00	64.00	25.00	9.25	4.74	4.17	2.67	1.50	1.47	1.70	19.70	27
28	37.50	68.50	58.00	27.00	9.00	4.74	4.17	2.11	1.50	1.47	1.70	18.60	28
29	55.50		47.50	24.00	9.00	4.74	4.17	2.11	1.50	1.47	1.60	28.00	29
30	47.50		45.00	24.00	9.00	4.74	4.17	2.70	1.50	1.50	1.60	46.40	30
31	43.50		45.00		9.00		4.17	2.70		1.50		44.00	31
TOTAL	689.90	1,693.15	2,664.80	975.30	452.25	191.85	126.46	87.00	51.299	54.54	50.18	583.35	
AVERAGE	22.25	60.47	85.96	32.51	14.58	6.39	4.07	2.80	1.71	1.76	1.67	18.97	

Annual Total (cu.m.s.-day 7,625.103

DISCHARGE (3) STATION PTE. MALAVILLAS

COATA RIVER, IN THE BASIN OF _____ ELEVATION 3,828 m UNIT cu.m.s. YEAR 1966

DATE	JAN.	FEB.	MAR.	APR.	MAY	JUNE	JULY	AUG.	SEPT.	OCT.	NOV.	DEC.	DATE
1	52.40	27.00	37.00	31.40	6.95	6.00	4.20	2.36	1.85	1.25			1
2	73.50	29.00	30.00	30.00	6.95	6.00	4.20	2.36	1.65	1.25			2
3	91.50	33.40	37.00	30.00	6.25	6.00	3.40	2.36	1.65	1.25			3
4	88.50	32.20	135.00	30.00	6.25	6.00	3.80	2.36	1.65	1.25			4
5	63.60	33.40	76.50	28.70	6.25	5.70	3.40	2.36	1.65	1.25			5
6	42.50	31.00	125.00	28.70	6.25	5.22	3.12	2.36	1.65	1.25			6
7	32.20	30.00	125.00	27.40	6.25	5.22	3.12	2.36	1.40	1.25			7
8	24.20	29.00	76.50	28.70	6.25	5.22	3.12	2.36	1.40	1.25			8
9	21.50	27.00	57.50	28.70	6.25	5.22	2.84	2.20	1.26	1.70			9
10	18.00	23.30	55.00	28.70	6.25	5.22	3.40	2.20	1.26	1.45			10
11	18.00	21.60	86.00	26.10	6.25	4.74	3.40	2.20	1.26	1.45			11
12	17.40	20.10	76.50	20.50	6.25	4.74	3.40	2.20	1.26	1.90			12
13	16.80	18.70	50.00	15.80	6.25	4.74	3.40	2.20	1.40	1.90			13
14	16.20	20.80	45.00	14.00	6.25	4.74	3.40	2.05	1.40	2.30			14
15	15.00	26.00	41.80	11.60	6.25	4.74	3.40	2.05	1.40	2.30			15
16	15.00	30.00	35.60	11.00	6.25	4.74	3.12	2.05	1.40	2.70			16
17	15.00	27.00	37.00	11.00	6.25	4.74	2.84	2.05	1.40	2.70			17
18	14.40	39.20	35.60	11.00	6.95	4.74	2.84	2.05	1.45	2.70			18
19	14.40	44.90	32.80	10.50	6.95	4.74	2.84	2.05	1.45	2.70			19
20	13.80	49.80	30.00	11.00	9.05	4.74	2.84	2.05	1.45	2.70			20
21	15.00	46.10	41.80	12.20	9.05	4.74	2.84	2.05	1.45	2.70			21
22	16.20	42.50	50.00	12.20	9.05	4.74	2.56	2.05	1.26	2.70			22
23	15.60	63.60	47.50	11.00	9.05	4.20	2.56	2.05	1.26	2.30			23
24	15.60	67.50	45.00	11.00	8.35	4.20	2.80	1.85	1.26	2.30			24
25	15.00	55.00	40.20	10.00	8.35	4.20	2.56	1.85	1.26	2.30			25
26	14.40	55.00	38.60	10.00	7.65	4.20	2.50	1.85	1.26	2.30			26
27	13.80	63.60	34.20	9.50	7.65	4.20	2.56	1.85	1.26	2.30			27
28	13.80	57.40	30.00	9.50	6.95	4.20	2.80	2.05	1.15	2.70			28
29	13.20		27.40	9.50	6.95	3.80	2.80	2.05	1.15	2.70			29
30	13.20		30.00	9.50	6.95	3.80	2.80	2.05	1.15	2.70			30
31	13.20		32.80		6.95		2.80	1.85		2.70			31
TOTAL	822.90	1,044.10	1,642.30	539.20	217.55	145.48	95.66	65.78	41.75	64.20			
AVERAGE	26.54	37.28	52.97	17.97	7.01	4.84	3.08	2.12	1.39	2.07			

Annual Total ( )

DISCHARGE (4) STATION VERDE

VERDE RIVER, IN THE BASIN OF _____ ELEVATION 4,330 m UNIT cu. m. s. YEAR 1961

DATE	JAN.	FEB.	MAR.	APR.	MAY	JUNE	JULY	AUG.	SEPT.	OCT.	NOV.	DEC.	DATE
1												14.20	1
2												9.00	2
3												5.50	3
4												4.40	4
5												4.00	5
6												3.00	6
7												2.80	7
8												2.60	8
9												2.50	9
10												2.40	10
11												2.60	11
12												6.00	12
13												12.10	13
14												32.20	14
15												42.10	15
16												30.40	16
17												29.50	17
18												31.30	18
19												56.00	19
20												102.00	20
21												98.00	21
22											6.50	87.20	22
23											4.60	101.00	23
24											26.80	88.40	24
25											34.90	94.00	25
26											40.30	77.60	26
27											34.00	75.20	27
28											22.60	93.00	28
29											12.80	95.00	29
30											15.60	76.40	30
31											22.60	77.60	31
TOTAL												1,358.00	
AVERAGE												43.80	

Annual Total ( )

DISCHARGE (4) STATION VERDE

VERDE RIVER, IN THE BASIN OF ELEVATION 4,330 m UNIT cu. m. s. YEAR 1963

DATE	JAN.	FEB.	MAR.	APR.	MAY	JUNE	JULY	AUG.	SEPT.	OCT.	NOV.	DEC.	DATE
1	34.90	136.80	117.00	32.20	8.50	1.92	1.20	1.08	1.20	1.28	3.60	2.20	1
2	28.60	114.00	173.20	20.80	8.00	1.84	1.20	1.08	1.20	1.36	4.00	2.30	2
3	18.60	102.00	128.00	21.80	7.50	1.76	1.20	1.08	1.20	1.44	3.40	6.00	3
4	25.00	103.20	105.60	25.90	7.00	1.68	1.14	1.08	1.14	1.68	2.90	7.00	4
5	80.00	96.00	88.40	26.80	8.00	1.68	1.14	1.08	1.14	2.00	5.20	8.00	5
6	87.20	89.60	89.60	33.10	14.90	1.68	1.08	1.08	1.20	2.50	4.00	15.40	6
7	86.00	81.20	76.40	38.50	9.50	1.68	1.08	1.14	1.20	2.30	4.20	24.40	7
8	106.80	68.00	71.60	31.30	7.50	1.60	1.08	1.12	1.20	3.80	3.20	30.40	8
9	87.20	75.20	86.00	29.50	8.50	1.60	1.08	1.20	1.20	4.60	2.80	43.00	9
10	84.80	102.00	82.40	25.90	7.50	1.52	1.08	1.14	1.60	9.00	2.70	53.40	10
11	72.80	87.20	95.00	21.00	5.50	1.52	1.08	1.14	1.60	9.00	2.70	53.40	11
12	57.20	77.60	77.60	17.80	5.00	1.44	1.08	1.14	1.60	14.20	2.60	56.00	12
13	62.00	72.80	71.60	25.90	4.60	1.36	1.08	1.14	1.44	9.50	2.70	56.00	13
14	64.40	98.00	65.60	25.00	4.40	1.36	1.08	1.14	1.36	5.00	2.40	72.80	14
15	68.00	95.00	75.20	24.20	4.00	1.20	1.08	1.14	1.44	3.40	2.00	80.00	15
16	88.40	83.60	81.20	21.80	3.80	1.20	1.08	1.14	1.52	2.90	2.50	102.00	16
17	86.00	84.80	75.20	17.80	3.80	1.28	1.08	1.14	1.52	2.80	2.50	82.00	17
18	106.80	84.80	68.00	14.90	3.80	1.28	1.08	1.14	1.52	2.80	2.30	48.20	18
19	80.00	86.00	63.20	10.70	4.00	1.36	1.08	1.14	1.76	2.70	2.10	33.10	19
20	63.20	72.80	65.60	10.00	3.60	1.28	1.08	1.14	1.76	2.50	2.00	22.60	20
21	57.20	92.00	62.00	13.50	3.20	1.20	1.02	1.14	1.60	2.30	2.00	17.80	21
22	68.00	100.00	56.00	26.80	2.90	1.20	1.02	1.14	1.44	2.10	2.70	29.50	22
23	58.40	106.80	54.70	20.00	2.80	1.20	1.02	1.14	1.28	2.20	3.20	17.80	23
24	56.00	114.00	41.20	19.40	2.80	1.14	1.02	1.14	1.20	2.10	3.40	12.10	24
25	82.40	131.60	31.30	17.00	2.70	1.14	1.02	1.14	1.20	2.00	2.50	8.50	25
26	104.40	131.60	30.40	21.00	2.70	1.08	1.02	1.14	1.14	1.84	2.40	8.50	26
27	121.00	119.00	27.70	17.00	2.70	1.08	0.96	1.14	1.14	1.84	2.30	36.70	27
28	114.00	124.00	33.10	15.60	2.60	1.08	0.96	1.14	1.14	1.76	2.30	54.70	28
29	100.00		33.10	13.50	2.50	1.08	0.96	1.14	1.14	2.00	2.30	45.60	29
30	82.40		25.80	10.00	2.30	1.08	0.96	1.14	1.28	2.10	2.20	46.90	30
31	106.80		38.50		2.30		0.96	1.14		3.20		32.20	31
TOTAL	2,338.50	2,729.60	2,200.20	655.70	158.90	41.52	33.00	35.02	39.96	10.38	83.40	1,108.50	
AVERAGE	75.43	97.48	70.97	21.85	5.12	1.38	1.06	1.12	1.33	3.34	2.78	35.75	

Annual Total (cu.m.s.-day) 9,434.680

DISCHARGE (4) STATION VERDE

VERDE RIVER, IN THE BASIN OF ELEVATION 4,330 m UNIT cu. m. s. YEAR 1962

DATE	JAN.	FEB.	MAR.	APR.	MAY	JUNE	JULY	AUG.	SEPT.	OCT.	NOV.	DEC.	DATE
1	97.00	86.00	64.40	50.80	3.60	1.60	0.90	0.84	0.78	1.14	1.44	1.36	1
2	75.20	87.20	102.00	45.60	3.60	1.60	0.90	0.84	0.78	0.96	1.36	2.10	2
3	87.20	144.40	132.90	40.30	3.60	1.52	0.96	0.78	1.02	0.96	1.20	2.60	3
4	109.20	148.00	111.60	35.80	3.40	1.52	0.96	0.78	0.96	0.96	1.28	2.50	4
5	101.00	131.60	101.00	40.30	3.20	1.44	0.96	0.78	1.20	0.90	1.36	5.00	5
6	111.60	123.00	81.20	36.70	3.00	1.44	0.96	0.78	1.20	0.96	1.20	5.00	6
7	143.20	149.20	74.00	25.50	3.00	1.44	0.90	0.84	0.96	1.02	1.20	2.30	7
8	139.40	142.00	71.60	25.00	2.90	1.44	0.90	0.90	0.90	1.14	1.20	2.30	8
9	118.00	103.20	66.80	21.00	2.90	1.36	0.90	0.90	0.84	1.08	1.20	2.50	9
10	111.60	83.60	66.80	21.80	2.90	1.36	0.90	0.84	0.84	1.02	1.20	2.30	10
11	84.80	71.60	62.00	17.00	2.80	1.28	0.90	0.84	1.14	1.08	1.20	2.20	11
12	89.60	66.80	50.80	13.50	2.80	1.28	0.90	0.84	1.28	1.02	1.20	1.92	12
13	87.20	57.20	53.40	15.60	2.70	1.20	0.90	0.84	1.14	0.90	1.20	9.00	13
14	92.00	50.80	48.20	19.40	2.70	1.20	0.90	0.84	1.02	0.90	1.36	32.20	14
15	126.00	44.30	40.30	14.20	2.60	1.20	0.90	0.84	1.28	0.90	1.36	43.00	15
16	100.00	38.50	28.60	11.40	2.60	1.20	0.90	0.84	1.68	1.02	1.28	56.00	16
17	75.20	34.00	26.80	9.50	2.60	1.14	0.90	0.84	1.92	0.96	1.14	30.40	17
18	62.00	32.20	25.90	8.50	2.60	1.14	0.90	0.84	1.44	0.96	1.14	17.00	18
19	56.00	32.20	25.90	12.80	2.60	1.14	0.90	0.84	1.20	1.20	1.08	10.00	19
20	58.40	36.70	26.80	10.70	2.60	1.08	0.90	0.84	1.14	2.00	1.02	14.20	20
21	53.40	50.80	38.50	8.00	2.60	1.08	0.90	0.84	1.28	2.40	1.02	48.20	21
22	48.20	54.70	28.60	7.00	2.60	1.08	0.90	0.84	1.84	4.00	1.02	74.00	22
23	39.40	58.40	22.60	6.50	2.60	1.08	0.90	0.84	2.10	3.20	1.02	70.40	23
24	37.60	65.60	25.00	6.50	2.60	1.02	0.90	0.84	1.68	2.40	1.02	71.60	24
25	43.00	66.80	25.90	6.00	2.60	1.02	0.90	0.78	1.44	1.92	1.08	84.80	25
26	80.00	63.20	60.80	5.50	2.60	1.02	0.84	0.78	1.36	1.76	1.08	68.00	26
27	90.80	62.00	48.20	5.50	2.60	1.02	0.84	0.78	1.20	1.84	1.02	54.70	27
28	100.00	65.60	46.90	4.80	2.60	0.96	0.78	0.78	1.14	1.84	0.96	50.80	28
29	70.40		50.80	3.60	2.60	0.96	0.78	0.78	1.08	1.68	1.08	37.60	29
30	54.70		68.00	4.60	2.50	0.90	0.78	0.78	1.14	1.60	1.20	36.70	30
31	46.90		65.60		2.50		0.78	0.78		1.36		34.00	31
TOTAL	2,589.00	2,149.60	1,741.90	537.40	87.10	36.72	27.54	25.50	36.98	45.08	25.12	874.68	
AVERAGE	13.51	76.77	56.19	17.91	2.81	1.22	0.88	0.82	1.23	1.45	1.17	28.21	

Annual Total (cu.m.s.-day) 8,186.620

DISCHARGE (4) STATION VERDE

VERDE RIVER, IN THE BASIN OF ELEVATION 4,330 m UNIT cu. m. s. YEAR 1964

DATE	JAN.	FEB.	MAR.	APR.	MAY	JUNE	JULY	AUG.	SEPT.	OCT.	NOV.	DEC.	DATE
1	25.00	3.00	6.28	14.70	4.24	2.25	1.10	1.05	1.05	1.00	1.00	1.40	1
2	17.00	9.00	7.25	11.98	4.06	2.10	1.10	1.05	1.05	1.00	1.05	1.33	2
3	13.51	15.60	5.56	10.12	3.70	2.10	1.10	1.05	1.05	1.00	1.12	1.82	3
4	17.10	17.80	5.32	8.75	3.34	1.82	1.10	1.05	1.00	1.00	2.03	2.59	4
5	13.50	31.30	7.25	7.75	2.98	1.68	1.10	1.05	1.00	1.05	2.13	2.73	5
6	12.10	34.00	8.00	7.00	2.98	1.68	1.10	1.00	1.00	1.05	1.71	2.13	6
7	13.50	27.70	7.50	6.52	2.98	1.68	1.10	0.95	1.00	1.05	1.50	1.82	7
8	23.40	25.00	7.50	7.00	2.80	1.68	0.95	1.00	1.00	1.05	1.33	1.71	8
9	34.20	46.90	22.00	11.05	2.66	1.54	0.95	1.00	1.00	1.05	1.26	1.82	9
10	33.10	31.30	18.88	8.50	2.52	1.54	0.95	1.00	1.00	1.05	1.89	2.13	10
11	26.80	23.40	20.96	7.00	2.38	1.45	0.95	1.00	1.05	1.05	1.26	3.29	11
12	21.00	29.50	26.48	6.76	2.38	1.45	0.95	1.00	1.12	1.05	2.45	3.01	12
13	17.80	45.60	18.88	6.04	2.25	1.45	1.10	0.95	1.12	1.05	3.01	3.29	13
14	12.10	75.20	27.75	5.80	2.10	1.45	1.10	0.95	1.12	1.05	2.34	3.43	14
15	9.00	72.80	22.64	5.56	2.10	1.45	1.10	0.95	1.12	1.00	2.43	5.77	15
16	7.00	78.80	22.64	5.32	2.10	1.35	0.95	0.95	1.12	1.00	1.71	5.25	16
17	7.00	35.00	21.48	4.84	2.10	1.35	0.95	0.95	1.12	1.00	1.50	5.25	17
18	4.80	77.60	23.28	4.60	2.38	1.33	0.95	0.95	1.26	1.00	1.33	6.82	18
19	4.00	64.40	28.40	5.08	3.34	1.33	0.95	0.95	1.26	1.05	1.26	6.30	19
20	3.60	59.60	32.96	6.76	3.70	1.33	0.95	0.95	1.26	1.05	1.26	4.37	20
21	3.20	40.20	28.40	11.36	2.98	1.25	0.95	0.95	1.26	1.00	7.50	3.43	21
22	2.90	30.40	36.00	10.43	2.66	1.25	0.95	0.95	1.19	1.00	1.50	2.87	22
23	2.70	22.60	42.84	8.00	4.24	1.25	0.95	0.95	1.12	1.00	1.33	3.43	23
24	3.60	19.40	34.48	6.76	5.08	1.25	0.95	1.00	1.12	1.00	1.19	5.95	24
25	4.20	20.20	49.36	6.04	3.70	1.10	0.95	1.00	1.05	1.05	1.19	6.12	25
26	3.20	24.20	36.76	6.28	3.16	1.10	0.95	0.95	1.05	1.05	1.12	5.77	26
27	2.70	17.80	27.76	6.76	2.66	1.10	0.95	0.95	1.05	1.05	1.40	4.72	27
28	2.50	13.50	22.00	6.04	2.52	1.10	0.95	0.95	1.00	1.05	2.24	4.37	28
29	2.40	9.50	18.36	5.08	2.52	1.10	0.95	0.95	1.00	1.00	1.82	4.55	29
30	2.40		20.44	4.60	2.52	1.10	0.95	1.00	1.00	1.00	1.50	3.71	30
31	2.70		15.12		2.25		0.95	1.00m		1.00		3.01	31
TOTAL	343.00	1,062.30	672.54	222.48	91.38	43.61	30.95	30.45	32.54	31.80	- 47.30	114.24	
AVERAGE	11.06	36.63	21.69	7.41	2.94	1.45	0.99	0.98	1.08	1.02	1.57	3.68	

Annual Total (cu.m.s.-day) 2,722.595

DISCHARGE (4) STATION VERDE

VERDE RIVER, IN THE BASIN OF ELEVATION 4,330 m UNIT cu. m. s. YEAR 1965

DATE	JAN.	FEB.	MAR.	APR.	MAY	JUNE	JULY	AUG.	SEPT.	OCT.	NOV.	DEC.	DATE
1	2.88	14.50	19.00	15.40	5.80	1.90	1.10	0.90	0.80	1.58	1.10	5.90	1
2	4.22	11.35	45.85	14.95	5.20	1.90	1.10	0.90	0.90	1.65	1.10	8.90	2
3	6.64	9.96	50.40	13.10	5.40	1.90	1.10	0.90	0.90	1.51	1.10	10.10	3
4	6.86	7.96	48.15	10.48	5.20	1.79	1.10	0.90	0.90	1.44	1.30	9.50	4
5	4.00	7.96	32.75	9.18	4.62	1.79	1.10	0.90	0.90	1.30	1.10	13.60	5
6	3.52	14.50	27.10	8.40	4.25	1.79	1.10	0.90	1.00	1.75	1.10	20.60	6
7	3.36	16.30	29.20	7.74	3.84	1.68	1.10	0.90	1.30	1.80	1.30	19.70	7
8	2.72	18.10	21.40	7.30	3.67	1.56	1.10	0.90	1.44	1.00	1.30	13.60	8
9	2.56	14.50	15.40	6.86	3.30	1.50	1.10	0.90	1.30	1.58	1.30	13.20	9
10	3.36	16.30	14.15	6.86	3.00	1.50	1.10	0.90	0.90	1.58	1.44	9.50	10
11	5.76	29.20	27.80	6.42	2.89	1.35	1.10	0.90	0.90	1.65	1.20	6.20	11
12	5.76	19.00	32.00	6.20	2.75	1.35	1.00	0.90	0.90	1.51	1.00	4.96	12
13	7.96	13.80	26.40	6.42	2.65	1.35	1.00	0.90	1.10	1.51	4.90	6.20	13
14	15.40	11.35	25.70	6.20	2.45	1.35	1.10	0.90	1.00	1.58	1.00	7.40	14
15	12.40	14.15	25.70	6.20	2.45	1.25	1.00	0.90	1.10	1.58	1.10	10.70	15
16	11.00	22.60	23.20	5.98	2.56	1.35	1.00	0.80	1.10	1.58	1.75	24.40	16
17	8.66	48.90	48.90	5.54	2.50	1.35	1.00	0.80	0.90	1.51	2.48	20.10	17
18	10.22	44.25	42.72	5.32	2.50	1.35	1.00	0.80	0.90	1.44	2.87	9.80	18
19	9.18	49.50	38.85	5.10	2.36	1.30	1.00	0.80	0.90	1.30	2.87	9.80	19
20	10.22	39.60	31.30	7.74	2.30	1.30	1.10	0.80	0.90	1.30	2.17	8.60	20
21	9.96	43.50	23.20	10.48	2.23	1.15	1.10	0.80	0.90	1.20	1.80	11.30	21
22	8.40	41.15	18.55	14.95	2.23	1.15	1.10	0.70	0.90	1.30	1.70	25.40	22
23	7.30	39.60	15.85	10.22	2.00	1.15	1.00	0.70	0.90	1.30	1.65	25.40	23
24	8.92	51.95	14.50	7.96	2.00	1.15	1.00	0.80	0.90	1.20	1.44	18.60	24
25	20.80	41.15	14.15	6.86	2.00	1.15	1.00	0.80	1.10	1.30	1.30	11.36	25
26	21.40	25.70	12.75	6.42	2.00	1.15	1.10	0.80	1.10	1.20	1.20	8.30	26
27	27.80	19.60	13.80	6.86	2.00	1.30	1.10	0.80	1.20	1.10	1.20	7.70	27
28	20.20	16.30	10.74	7.96	2.00	1.30	1.00	0.70	1.10	1.10	1.30	15.20	28
29	18.55		10.48	6.20	1.90	1.30	1.00	0.70	1.30	1.20	1.37	41.70	29
30	15.85		11.70	5.98	1.90	1.30	1.00	0.70	1.58	1.10	1.58	40.50	30
31	15.40		9.70		1.90		1.00	0.80		1.10		38.10	31
TOTAL	311.36	702.73	781.39	245.28	91.85	42.74	32.70	25.80	31.02	43.18	44.02	479.72	
AVERAGE	10.04	25.09	25.20	8.17	2.96	1.42	1.05	0.83	1.03	1.39	1.46	15.47	

Annual Total (cu.m.s-day) 2,831.695

DISCHARGE (4) STATION VERDE

VERDE RIVER, IN THE BASIN OF ELEVATION 4,330 m UNIT cu.m.s. YEAR 1966

DATE	JAN.	FEB.	MAR.	APR.	MAY	JUNE	JULY	AUG.	SEPT.	OCT.	NOV.	DEC.	DATE
1	38.96	20.76	55.52	6.40	1.85	1.55	0.91	0.82	0.70	0.78			1
2	38.28	16.44	61.04	6.00	1.85	1.55	0.91	0.82	0.70	0.83			2
3	29.20	19.80	51.24	5.40	1.75	1.55	0.91	0.82	0.70	0.83			3
4	23.88	14.28	57.20	4.60	1.65	1.46	0.97	0.82	0.70	1.07			4
5	16.92	12.56	43.40	4.24	1.65	1.46	1.02	0.82	0.70	1.14			5
6	13.20	10.64	34.00	4.08	1.65	1.46	1.02	0.77	0.70	1.30			6
7	10.96	14.28	28.00	3.76	1.65	1.38	1.02	0.77	0.70	1.30			7
8	8.80	11.60	21.24	3.60	1.65	1.38	1.02	0.77	0.70	1.22			8
9	7.28	15.96	17.40	3.28	1.55	1.30	0.97	0.77	0.74	1.55			9
10	6.62	14.28	15.00	3.12	1.46	1.30	1.02	0.77	0.74	1.65			10
11	5.80	10.00	13.92	2.96	1.46	1.30	1.02	0.77	0.74	1.65			11
12	5.40	1.54	12.88	2.80	1.38	1.30	0.97	0.77	0.74	1.38			12
13	4.80	8.54	11.92	2.64	1.38	1.21	0.97	0.77	0.74	1.30			13
14	4.24	8.28	10.96	2.48	1.30	1.21	0.97	0.77	0.74	1.65			14
15	3.92	10.96	9.52	2.32	1.65	1.21	0.91	0.77	0.78	3.06			15
16	3.60	10.96	9.04	2.16	2.75	1.21	0.91	0.73	0.78	3.92			16
17	3.28	22.76	8.02	2.00	3.66	1.12	0.91	0.73	0.78	4.18			17
18	3.76	41.00	7.76	2.00	3.46	1.12	0.97	0.73	0.78	3.48			18
19	6.40	40.32	7.50	1.84	3.08	1.12	0.97	0.73	0.78	3.06			19
20	6.40	42.60	8.80	1.68	2.75	1.12	0.97	0.73	0.78	2.78			20
21	7.28	39.64	13.92	1.68	2.65	1.12	0.91	0.73	0.78	2.90			21
22	6.62	38.96	12.88	2.64	2.50	1.12	0.91	0.73	0.78	3.22			22
23	7.06	47.88	13.20	2.32	2.26	1.04	0.91	0.73	0.89	2.54			23
24	5.80	57.20	11.28	2.00	2.05	1.04	1.02	0.73	0.89	2.06			24
25	8.28	48.60	8.54	1.84	1.96	1.04	0.97	0.77	0.83	1.85			25
26	12.88	62.80	7.06	1.68	1.85	1.04	0.91	0.77	0.83	1.65			26
27	10.00	51.24	6.84	1.52	1.75	1.04	0.91	0.77	0.83	1.85			27
28	8.28	73.00	6.62	1.52	1.75	1.04	0.91	0.77	0.78	1.75			28
29	18.84		6.62	1.36	1.65	0.94	0.91	0.77	0.78	1.46			29
30	29.80		7.28	1.20	1.55	0.94	0.91	0.77	0.78	1.30			30
31	22.76		7.06		1.46		0.91	0.73		1.30			31
TOTAL	379.30	773.88	585.66	85.12	61.11	36.77	29.60	23.82	22.89	60.01			
AVERAGE	12.23	27.63	18.89	2.83	1.97	1.22	0.95	0.76	0.76	1.93			

Annual Total (cu.m.s-day)

DISCHARGE (5) STATION LA LAGUNILLAS

CERRILLOS RIVER, IN THE BASIN OF _____ ELEVATION 4,300 m UNIT cu. m. s. YEAR 1961

DATE	JAN.	FEB.	MAR.	APR.	MAY	JUNE	JULY	AUG.	SEPT.	OCT.	NOV.	DEC.	DATE
1												1.16	1
2												1.16	2
3												1.16	3
4												1.16	4
5												1.16	5
6												1.04	6
7												0.92	7
8												0.92	8
9												0.92	9
10												0.92	10
11												0.80	11
12												0.80	12
13												1.04	13
14												1.04	14
15												1.28	15
16												1.40	16
17												1.64	17
18												1.76	18
19												2.00	19
20												2.36	20
21												3.08	21
22												3.72	22
23												4.02	23
24												5.04	24
25												5.46	25
26												6.30	26
27											1.20	7.38	27
28											1.20	8.19	28
29											1.16	8.73	29
30											1.16	9.44	30
31												10.10	31
TOTAL												96.70	
AVERAGE												3.11	

Annual Total ( )

DISCHARGE (5) STATION LA LAGUNILLAS

CERRILLOS RIVER, IN THE BASIN OF ELEVATION 4,300 m UNIT cu.m.s. YEAR 1962

DATE	JAN.	FEB.	MAR.	APR.	MAY	JUNE	JULY	AUG.	SEPT.	OCT.	NOV.	DEC.	DATE
1	10.76	22.00	25.10	18.50	10.54	4.62	2.60	1.52	0.80	0.77	0.24	0.12	1
2	10.78	23.00	25.40	18.50	10.54	4.41	2.60	1.52	0.80	0.68	0.24	0.12	2
3	11.20	24.50	26.30	18.25	10.32	4.20	2.60	1.40	0.80	0.68	0.24	0.14	3
4	11.76	26.30	26.90	18.25	10.10	4.20	2.48	1.40	0.80	0.68	0.24	0.14	4
5	12.60	28.80	27.20	18.00	9.88	4.04	2.48	1.40	0.80	0.59	0.24	0.16	5
6	13.40	30.10	27.20	18.00	9.66	4.04	2.48	1.40	0.80	0.59	0.24	0.16	6
7	14.00	30.75	27.20	18.00	9.44	3.88	2.36	1.28	0.80	0.59	0.24	0.16	7
8	14.75	31.40	27.20	17.75	9.22	3.88	2.36	1.28	0.80	0.50	0.20	0.20	8
9	15.25	32.05	27.20	17.75	9.00	3.72	2.36	1.28	0.80	0.50	0.24	0.18	9
10	15.75	32.70	26.90	17.25	8.73	3.72	2.24	1.16	0.74	0.50	0.24	0.18	10
11	16.00	32.70	26.90	17.00	8.46	3.56	2.24	1.16	0.80	0.50	0.24	0.18	11
12	16.25	32.05	26.60	16.50	8.19	3.56	2.24	1.16	0.80	0.41	0.24	0.18	12
13	17.25	30.75	26.30	16.25	7.92	3.40	2.12	1.16	0.80	0.41	0.24	0.20	13
14	17.75	29.45	25.70	16.00	7.65	3.40	2.12	1.04	0.74	0.41	0.24	0.22	14
15	11.75	28.15	25.40	15.75	7.38	3.24	2.12	1.04	0.74	0.34	0.24	0.24	15
16	19.30	27.20	24.50	15.25	7.11	3.24	2.12	1.04	0.74	0.34	0.22	0.24	16
17	19.90	26.60	24.00	15.00	6.84	3.24	2.00	1.04	0.74	0.34	0.22	0.26	17
18	20.20	26.00	23.50	14.75	6.57	3.24	2.00	0.92	0.74	0.34	0.22	0.26	18
19	20.20	25.40	23.00	14.50	6.30	3.08	1.88	0.92	0.74	0.31	0.22	0.28	19
20	20.80	24.80	22.50	14.25	6.09	3.08	1.88	0.92	0.74	0.31	0.20	0.25	20
21	20.80	24.50	22.00	14.00	6.09	3.08	1.88	0.92	0.74	0.34	0.20	0.30	21
22	20.80	24.25	20.40	13.72	6.09	3.08	1.88	0.80	0.74	0.34	0.20	0.40	22
23	20.50	24.25	20.80	13.44	5.88	2.92	1.88	0.80	0.68	0.31	0.18	0.40	23
24	20.20	24.50	20.20	13.16	5.88	2.92	1.76	0.80	0.68	0.31	0.15	0.54	24
25	19.90	24.80	19.90	12.60	5.67	2.92	1.76	0.74	1.74	0.26	0.15	0.59	25
26	19.90	24.80	19.90	12.32	5.46	2.92	1.76	0.74	0.74	0.26	0.15	0.95	26
27	20.50	24.50	19.60	12.04	5.46	2.92	1.76	0.80	0.74	0.26	0.15	1.26	27
28	21.10	24.50	18.75	11.76	5.25	2.92	1.64	0.80	0.74	0.26	0.15	1.37	28
29	21.40		18.50	11.20	5.04	2.76	1.64	0.80	0.74	0.22	0.24	1.37	29
30	21.40		18.50	10.98	4.83	2.76	1.52	0.80	0.68	0.22	0.20	1.37	30
31	21.40		18.50		4.83		1.52	0.80		0.22		1.37	31
TOTAL	544.59	760.80	733.05	460.72	229.37	102.95	64.28	32.84	22.74	12.79	6.55	13.79	
AVERAGE	17.56	27.17	23.64	15.35	7.39	3.43	2.07	1.05	0.75	0.41	0.21	0.44	

Annual Total (cu.m.s.-day 2,984.475

DISCHARGE (5) STATION LA LAGUNILLAS

CERRILLOS RIVER, IN THE BASIN OF _____ ELEVATION 4,300 m UNIT cu. m. s. YEAR 1963

DATE	JAN.	FEB.	MAR.	APR.	MAY	JUNE	JULY	AUG.	SEPT.	OCT.	NOV.	DEC.	DATE
1	1.52	14.41	38.05	25.56	13.00	6.00	3.06	1.98	2.00	1.80	1.30	1.30	1
2	1.66	14.95	39.10	24.12	12.77	6.00	3.06	1.98	2.00	1.80	1.30	1.30	2
3	1.80	16.03	40.50	23.16	12.31	5.77	3.06	1.98	1.90	1.70	1.30	1.30	3
4	1.80	16.59	41.20	22.20	12.08	5.54	3.06	1.98	1.80	1.70	1.30	1.30	4
5	2.28	17.17	41.20	21.94	11.85	5.54	3.06	1.98	1.80	1.70	1.30	1.30	5
6	2.92	17.17	40.15	21.68	11.85	5.31	2.90	1.98	1.80	1.70	1.35	1.30	6
7	3.56	17.46	40.15	21.42	11.62	5.08	2.90	1.98	1.80	1.70	1.35	1.30	7
8	4.04	17.75	39.80	21.16	11.39	5.08	2.90	1.86	1.80	1.70	1.30	1.30	8
9	4.68	17.75	39.80	20.90	11.16	5.08	2.90	1.86	1.75	1.70	1.30	1.40	9
10	5.20	18.33	40.15	20.64	10.93	4.85	2.74	1.86	1.75	1.70	1.30	1.60	10
11	6.00	18.91	40.85	20.12	10.70	4.85	2.74	1.86	1.80	1.70	1.30	1.80	11
12	6.20	19.52	40.85	19.60	10.46	4.62	2.74	1.74	1.80	1.70	1.30	1.95	12
13	6.60	19.84	40.50	19.38	10.22	4.62	2.74	1.74	1.80	1.70	1.30	2.10	13
14	7.00	20.16	39.80	18.94	9.98	4.39	2.74	1.74	1.75	1.60	1.30	2.25	14
15	7.40	20.48	39.45	18.72	9.74	4.16	2.58	1.74	1.75	1.60	1.30	2.60	15
16	7.60	21.12	38.75	18.50	9.50	4.16	2.58	1.74	1.75	1.60	1.30	3.00	16
17	8.20	21.44	38.05	18.06	9.26	3.93	2.42	1.74	1.75	1.60	1.30	3.50	17
18	8.40	22.08	38.40	17.84	9.02	3.93	2.42	1.74	1.70	1.60	1.24	3.85	18
19	8.80	23.12	38.05	17.40	8.78	3.70	2.42	1.74	1.70	1.60	1.24	3.85	19
20	8.80	23.48	37.35	16.71	8.54	3.70	2.42	1.62	1.70	1.60	1.24	3.85	20
21	9.00	24.20	36.20	16.48	8.54	3.70	2.42	1.62	1.70	1.60	1.24	3.85	21
22	9.22	24.92	35.40	16.48	8.30	3.54	2.26	1.62	1.70	1.50	1.24	3.85	22
23	9.66	26.00	34.60	16.25	8.07	3.54	2.26	1.50	1.70	1.50	1.24	3.85	23
24	9.88	27.40	33.80	16.02	7.84	3.38	2.26	1.50	1.70	1.50	1.24	3.85	24
25	10.32	28.80	32.65	15.79	7.61	3.38	2.26	1.38	1.70	1.40	1.24	3.50	25
26	11.20	30.90	31.60	15.56	7.38	3.38	2.26	1.26	1.70	1.40	1.24	3.68	26
27	12.40	33.00	30.90	15.33	7.38	3.38	2.10	1.26	1.70	1.35	1.24	3.68	27
28	13.12	34.60	30.20	15.10	7.15	3.22	2.10	1.26	1.65	1.35	1.24	3.85	28
29	13.60		29.50	14.89	6.92	3.22	2.10	1.26	1.65	1.35	1.24	3.85	29
30	13.60		29.15	14.47	6.69	3.06	2.10	1.14	1.65	1.35	1.24	3.85	30
31	13.60		28.45		6.46		2.10	1.14		1.30		3.85	31
TOTAL	230.06	607.58	1,144.60	564.42	297.50	130.11	79.66	51.78	52.75	49.10	38.32	83.81	
AVERAGE	7.42	21.69	36.92	18.81	9.59	4.33	2.56	1.67	1.75	1.58	1.27	2.70	

Annual Total (cu.m.s.-day) 5,329.690

DISCHARGE (5) STATION LA LAGUNILLAS

CERRILLOS RIVER, IN THE BASIN OF _____ ELEVATION 4,300 m UNIT cu. m. s. YEAR 1964

DATE	JAN.	FEB.	MAR.	APR.	MAY	JUNE	JULY	AUG.	SEPT.	OCT.	NOV.	DEC.	DATE
1	3.80	1.77	5.47	8.10	4.77	2.71	1.26	0.55	0.24	0	0	0	1
2	3.68	1.77	5.47	7.75	4.60	2.71	1.26	0.55	0.24	0	0	0	2
3	3.68	1.77	5.30	7.40	4.42	2.58	1.18	0.55	0.24	0	0	0	3
4	3.68	1.90	5.30	7.05	4.42	2.44	1.18	0.55	0.24	0	0	0	4
5	3.51	2.04	5.30	6.70	4.25	2.44	1.08	0.50	0.21	0	0	0	5
6	3.51	2.44	5.30	6.35	4.11	2.44	1.10	0.50	0.21	0	0	0	6
7	3.68	2.58	5.30	6.00	4.11	2.30	1.10	0.45	0.21	0	0	0	7
8	3.68	2.58	5.30	6.00	3.97	2.31	1.02	0.45	0.21	0	0	0	8
9	3.80	2.71	5.47	6.00	3.97	2.17	1.02	0.45	0.19	0	0	0	9
10	3.50	2.71	5.47	5.82	3.83	2.17	1.02	0.45	0.19	0	0	0	10
11	3.60	2.71	5.65	5.82	3.69	2.04	1.02	0.45	0.19	0	0	0	11
12	3.60	2.85	5.82	5.82	3.55	2.04	0.94	0.40	0.19	0	0	0	12
13	3.60	3.27	5.82	5.82	3.55	2.04	0.94	0.40	0.19	0	0	0	13
14	3.60	3.69	6.00	5.82	3.41	1.90	0.94	0.40	0.25	0	0	0	14
15	3.50	3.97	6.35	5.65	3.27	1.90	0.86	0.40	0.24	0	0	0	15
16	3.20	4.42	6.35	5.47	3.27	1.77	0.86	0.40	0.24	0	0	0	16
17	3.20	5.12	6.70	5.47	3.27	1.77	0.86	0.40	0.24	0	0	0	17
18	3.10	5.47	6.70	5.30	3.27	1.77	0.78	0.40	0.24	0	0	0	18
19	3.05	5.82	6.70	5.30	3.27	1.63	0.78	0.40	0.23	0	0	0	19
20	3.50	6.00	6.70	5.30	3.27	1.63	0.78	0.40	0.23	0	0	0	20
21	2.90	6.00	7.05	5.30	3.13	1.50	0.70	0.40	0.23	0	0	0	21
22	2.80	6.00	7.05	5.30	3.13	1.50	0.70	0.40	0.23	0	0	0	22
23	2.70	6.00	7.40	5.30	3.27	1.50	0.70	0.40	0.18	0	0	0	23
24	2.55	5.82	7.75	5.30	3.27	1.42	0.65	0.40	0.18	0	0	0	24
25	2.55	5.82	8.45	5.12	3.13	1.42	0.65	0.40	0.18	0	0	0	25
26	2.45	5.82	8.45	5.12	3.13	1.42	0.65	0.40	0.18	0	0	0	26
27	2.45	5.65	8.45	5.12	2.99	1.34	0.60	0.35	0.12	0	0	0	27
28	2.35	5.65	8.45	5.12	2.99	1.34	0.60	0.35	0.12	0	0	0	28
29	2.20	5.65	8.45	4.95	2.99	1.34	0.60	0.35	0.12	0	0	0	29
30	2.00		8.45	4.77	2.85	1.26	0.55	0.35	0.10	0	0	0	30
31	2.00		8.10		2.85		0.55	0.35					31
TOTAL	97.44	118.06	204.55	174.39	110.15	56.86	27.03	13.20	6.24	0	0	0	
AVERAGE	3.14	4.07	6.59	5.81	3.54	1.89	0.87	0.42	0.20	0	0	0	

Annual Total (cu.m.s.-day 807.795

DISCHARGE (5) STATION LA LAGUNILLAS

CERRILLOS RIVER, IN THE BASIN OF _____ ELEVATION 4,300 m UNIT cu. m. s. YEAR 1965

DATE	JAN.	FEB.	MAR.	APR.	MAY	JUNE	JULY	AUG.	SEPT.	OCT.	NOV.	DEC.	DATE
1	0	0	4.74	7.35	4.00	1.26	0.52	0.33	0.18	0	0	0	1
2	0	0	5.22	7.35	4.00	1.26	0.60	0.33	0.21	0	0	0	2
3	0	0	5.64	7.35	4.00	1.26	0.52	0.32	0.21	0	0	0	3
4	0	0	5.85	7.10	3.76	1.02	0.51	0.32	0.21	0	0	0	4
5	0	0.05	6.10	7.10	3.50	1.02	0.51	0.32	0.21	0	0	0	5
6	0	0.09	6.35	6.85	3.50	1.02	0.52	0.32	0.21	0	0	0	6
7	0	0.21	6.35	6.60	3.25	1.02	0.52	0.32	0.21	0	0	0	7
8	0	0.25	6.60	6.35	3.25	0.95	0.51	0.39	0.21	0	0	0	8
9	0	0.30	6.60	6.10	3.00	0.95	0.52	0.30	0.21	0	0	0	9
10	0	0.35	6.60	6.10	3.00	0.95	0.51	0.30	0.18	0	0	0	10
11	0	0.45	6.60	5.85	3.00	0.95	0.51	0.30	0.19	0	0	0	11
12	0	0.45	6.85	5.43	2.75	0.95	0.51	0.30	0.19	0	0	0	12
13	0	0.55	6.85	5.22	2.50	0.82	0.51	0.28	0.18	0	0	0	13
14	0	0.60	7.10	5.00	2.50	0.82	0.50	0.28	0.19	0	0	0	14
15	0	0.70	7.60	5.00	2.50	0.75	0.48	0.28	0.18	0	0	0	15
16	0	0.75	7.60	5.00	2.25	0.70	0.48	0.28	0.18	0	0	0	16
17	0	0.89	7.60	4.80	2.25	0.75	0.48	0.27	0.19	0	0	0	17
18	0	1.00	7.60	4.80	2.25	0.75	0.48	0.26	0.19	0	0	0	18
19	0	1.20	7.85	4.74	2.00	0.70	0.44	0.26	0.18	0	0	0	19
20	0	1.40	7.85	4.74	2.00	0.70	0.45	0.23	0.14	0	0	0	20
21	0	2.25	8.10	4.74	1.80	0.60	0.40	0.23	0.12	0	0	0	21
22	0	3.00	8.10	4.74	1.55	0.60	0.41	0.21	0.12	0	0	0	22
23	0	3.00	8.10	4.74	1.55	0.60	0.41	0.21	0.12	0	0	0	23
24	0	3.75	8.10	4.74	1.55	0.60	0.40	0.21	0.12	0	0	0	24
25	0	4.30	7.85	4.74	1.55	0.55	0.40	0.21	0.10	0	0	0	25
26	0	4.74	7.85	4.74	1.40	0.55	0.40	0.21	0.10	0	0	0	26
27	0	4.74	7.85	4.74	1.40	0.55	0.40	0.21	0.10	0	0	0	27
28	0	4.74	7.85	4.30	1.40	0.55	0.40	0.21	0.08	0	0	0	28
29	0		7.85	4.30	1.40	0.55	0.34	0.21	0.08	0	0	0	29
30	0		7.60	4.00	1.40	0.55	0.34	0.21	0.07	0	0	0	30
31	0		7.35		1.40		0.34	0.21		0		0	31
TOTAL	0	38.30	219.90	164.17	75.91	24.51	14.45	8.45	5.01	0	0	0	
AVERAGE	0	1.36	7.09	5.47	2.44	0.81	0.46	0.27	0.16	0	0	0	

Annual Total (cu.m.s.-day) 550.718

DISCHARGE (5) STATION LA LAGUNILLAS

CERRILLOS RIVER, IN THE BASIN OF ELEVATION 4,300 m UNIT cu. m. s. YEAR 1966

DATE	JAN.	FEB.	MAR.	APR.	MAY	JUNE	JULY	AUG.	SEPT.	OCT.	NOV.	DEC.	DATE
1	0	0.36	7.05	7.75	3.10	1.88	0.71	0.35	0.06				1
2	0	0.42	1.35	7.40	3.10	1.88	0.64	0.35	0.06				2
3		0.54	9.50	7.05	3.00	1.88	0.64	0.32	0.06				3
4		0.66	10.50	6.70	3.00	1.80	0.64	0.32	0.06				4
5		0.72	11.30	6.35	3.00	1.80	0.57	0.32	0.06				5
6		0.72	11.75	6.00	3.00	1.80	0.57	0.29	0.06				6
7		0.78	12.00	5.80	3.00	1.80	0.57	0.29	0.02				7
8		0.84	12.00	5.60	2.86	1.80	0.50	0.25	0.02				8
9		0.90	12.00	5.40	2.86	1.80	0.50	0.25					9
10		1.04	11.75	5.20	2.72	1.62	0.50	0.25					10
11		1.11	11.50	5.00	2.72	1.62	0.50	0.25					11
12		1.18	11.30	5.00	2.72	1.62	0.50	0.22					12
13		1.18	11.10	4.70	2.58	1.44	0.50	0.22					13
14		1.18	10.90	4.70	2.44	1.44	0.50	0.19					14
15		1.18	10.70	4.40	2.44	1.44	0.50	0.19					15
16		1.18	10.50	4.10	2.58	1.44	0.50	0.16					16
17		1.25	10.25	3.80	2.58	1.28	0.50	0.16					17
18		1.33	10.00	3.80	2.72	1.28	0.50	0.16					18
19		1.65	9.75	3.80	2.58	1.28	0.45	0.14					19
20		1.89	9.50	3.50	2.58	1.14	0.40	0.14					20
21		2.13	9.50	3.50	2.44	1.14	0.45	0.14					21
22		2.35	9.50	3.50	2.44	1.14	0.45	0.14					22
23		2.65	9.50	3.50	2.44	1.14	0.40	0.12					23
24		3.05	9.25	3.35	2.30	1.14	0.40	0.12					24
25		3.35	8.95	3.35	2.18	1.14	0.40	0.10					25
26		4.10	8.95	3.35	2.18	1.14	0.40	0.10					26
27		5.20	1.65	3.20	2.06	1.00	0.40	0.10					27
28		5.80	8.35	3.20	2.06	1.00	0.40	0.10					28
29	0.06		8.05	3.05	2.06	1.00	0.40	0.10					29
30	0.15		7.75	3.05	2.06	0.86	0.35	0.08					30
31	0.21		7.75		1.96		0.35	0.08					31
TOTAL	0.42	48.74	307.90	139.10	79.76	42.74	15.11	6.14	0.40				
AVERAGE	0.01	1.74	9.93	4.63	2.57	1.42	0.48	0.19	0.01				

Annual Total ( )

DISCHARGE (6) STATION SARACOCHA

COMPUERTA RIVER, IN THE BASIN OF ELEVATION 4,300 m UNIT cu. m. s. YEAR 1961

DATE	JAN.	FEB.	MAR.	APR.	MAY	JUNE	JULY	AUG.	SEPT.	OCT.	NOV.	DEC.	DATE
1												0.01	1
2												0.01	2
3												0.01	3
4												0.01	4
5												0.01	5
6												0.01	6
7												0.01	7
8												0.01	8
9												0.01	9
10												0.01	10
11												0.01	11
12												0.01	12
13												0.01	13
14												0.01	14
15												0.02	15
16												0.02	16
17												0.02	17
18												0.02	18
19												0.02	19
20												0.02	20
21											0.01	0.02	21
22											0.01	0.02	22
23											0.01	0.02	23
24											0.01	0.02	24
25											0.01	0.02	25
26											0.01	0.02	26
27											0.01	0.03	27
28											0.01	0.03	28
29											0.01	0.04	29
30											0.01	0.04	30
31												0.06	31
TOTAL												0.59	
AVERAGE												0.01	

Annual Total ( )

DISCHARGE (6) STATION SARACOCHA

COMPUERTA RIVER, IN THE BASIN OF ELEVATION 4,300 m UNIT cu. m. s. YEAR 1962

DATE	JAN.	FEB.	MAR.	APR.	MAY	JUNE	JULY	AUG.	SEPT.	OCT.	NOV.	DEC.	DATE
1	0.12	2.14	2.90	2.19	0.75	0.29	0.32	0.29	0.11	0.10	0.02	0.02	1
2	0.12	2.43	2.90	2.14	0.75	0.26	0.32	0.20	0.11	0.10	0.02	0.02	2
3	0.15	2.75	2.95	2.14	0.75	0.26	0.32	0.20	0.11	0.10	0.02	0.02	3
4	0.15	3.10	2.95	2.09	0.68	0.26	0.32	0.20	0.11	0.10	0.02	0.02	4
5	0.20	3.35	3.00	2.09	0.68	0.26	0.32	0.18	0.11	0.10	0.02	0.02	5
6	0.23	3.55	3.00	2.04	0.64	0.26	0.29	0.18	0.11	0.10	0.02	0.02	6
7	0.26	3.65	3.00	1.99	0.64	0.26	0.29	0.18	0.11	0.10	0.02	0.02	7
8	0.32	3.74	3.00	1.99	0.60	0.26	0.29	0.18	0.11	0.10	0.02	0.02	8
9	0.37	3.78	3.00	1.93	0.60	0.23	0.29	0.18	0.11	0.10	0.02	0.02	9
10	0.49	3.78	2.95	1.88	0.57	0.23	0.29	0.18	0.11	0.10	0.02	0.02	10
11	0.57	3.74	2.90	1.78	0.57	0.23	0.29	0.18	0.11	0.10	0.02	0.02	11
12	0.68	3.65	2.85	1.78	0.53	0.23	0.29	0.18	0.11	0.10	0.02	0.02	12
13	0.79	3.60	2.80	1.78	0.49	0.20	0.26	0.15	0.11	0.10	0.02	0.02	13
14	1.01	3.50	2.75	1.78	0.49	0.20	0.26	0.15	0.11	0.08	0.02	0.02	14
15	1.25	3.45	2.70	1.68	0.46	0.20	0.26	0.15	0.11	0.08	0.02	0.02	15
16	1.34	3.40	2.61	1.64	0.46	0.20	0.26	0.15	0.11	0.08	0.02	0.02	16
17	1.42	3.35	2.52	1.60	0.43	0.20	0.26	0.15	0.11	0.08	0.02	0.02	17
18	1.47	3.25	2.47	1.55	0.43	0.20	0.26	0.15	0.11	0.08	0.02	0.02	18
19	1.51	3.25	2.43	1.51	0.43	0.20	0.26	0.15	0.11	0.08	0.02	0.02	19
20	1.55	3.20	2.38	1.47	0.40	0.20	0.23	0.15	0.11	0.08	0.02	0.02	20
21	1.60	3.15	2.38	1.42	0.40	0.20	0.23	0.12	0.11	0.08	0.02	0.02	21
22	1.64	3.10	2.29	1.34	0.37	0.23	0.23	0.12	0.10	0.05	0.02	0.02	22
23	1.64	3.10	2.25	1.30	0.37	0.26	0.23	0.12	0.10	0.05	0.02	0.02	23
24	1.64	3.15	2.14	1.25	0.37	0.29	0.23	0.12	0.10	0.05	0.02	0.02	24
25	1.64	3.10	2.14	1.15	0.37	0.29	0.23	0.12	0.10	0.05	0.02	0.02	25
26	1.68	3.00	2.14	1.15	0.34	0.29	0.23	0.12	0.10	0.05	0.02	0.02	26
27	1.88	2.95	2.09	1.11	0.34	0.26	0.20	0.12	0.10	0.04	0.02	0.02	27
28	1.93	2.90	2.04	0.92	0.32	0.32	0.20	0.12	0.10	0.04	0.02	0.02	28
29	1.99		2.04	0.92	0.32	0.32	0.20	0.12	0.10	0.04	0.02	0.02	29
30	1.99		2.19	0.79	0.32	0.32	0.20	0.11	0.10	0.02	0.02	0.02	30
31	2.04		2.14		02.9		0.20	0.11		0.02		0.02	31
TOTAL	33.78	91.12	79.96	48.66	15.31	7.52	8.18	4.77	3.21	2.35	0.60	0.62	
AVERAGE	1.09	3.25	2.57	1.62	0.49	0.25	0.26	0.15	0.10	0.07	0.02	0.02	

Annual Total (cu.m.s.-day) 296.112

DISCHARGE (6) STATION SARACOCHA

COMPUERTA RIVER, IN THE BASIN OF ELEVATION 4,300 m UNIT cu. m. s. YEAR 1963

DATE	JAN.	FEB.	MAR.	APR.	MAY	JUNE	JULY	AUG.	SEPT.	OCT.	NOV.	DEC.	DATE
1		0.75	4.70	4.84	2.86	1.10	0.60	0.37	0.21	0.10			1
2		0.84	4.64	4.77	2.80	1.04	0.60	0.37	0.21	0.10			2
3		0.98	4.91	4.70	2.75	1.01	0.56	0.35	0.21	0.10			3
4		1.14	5.05	4.70	2.65	0.98	0.56	0.35	0.21	0.10			4
5		1.18	5.05	4.64	2.60	0.95	0.56	0.35	0.21	0.10			5
6		1.26	5.12	4.58	2.55	0.92	0.52	0.35	0.21	0.08			6
7		1.30	5.26	4.52	2.50	0.89	0.52	0.32	0.19	0.08			7
8		1.40	5.26	4.46	2.45	0.89	0.52	0.32	0.19	0.08			8
9		1.45	5.33	4.40	2.40	0.86	0.52	0.32	0.19	0.08			9
10		1.50	5.40	4.28	2.35	0.83	0.49	0.32	0.19	0.08			10
11		1.55	5.58	4.16	2.25	0.83	0.49	0.32	0.19	0.08			11
12		1.60	5.64	4.10	2.20	0.80	0.49	0.30	0.19	0.08			12
13		1.60	5.76	3.96	2.15	0.80	0.49	0.30	0.19	0.08			13
14		1.65	5.76	3.89	2.05	0.76	0.45	0.30	0.19	0.08			14
15		1.70	5.82	3.82	2.05	0.72	0.45	0.30	0.19	0.08			15
16		1.75	5.88	3.68	1.95	0.60	0.45	0.30	0.19	0.08			16
17		1.80	5.94	3.61	1.95	0.72	0.45	0.27	0.19	0.05			17
18		1.90	5.94	3.54	1.90	0.72	0.45	0.27	0.19	0.05			18
19		2.10	5.94	3.47	1.85	0.72	0.42	0.27	0.19	0.05			19
20		2.20	5.88	3.34	1.80	0.72	0.42	0.27	0.19	0.05			20
21		2.30	5.82	3.22	1.75	0.72	0.42	0.27	0.19	0.05			21
22		2.45	5.76	3.28	1.75	0.68	0.42	0.24	0.16	0.05			22
23		2.60	5.70	3.28	1.65	0.68	0.39	0.24	0.16	0.05			23
24		2.80	5.58	3.28	1.65	0.68	0.39	0.24	0.16	0.05			24
25		3.10	5.46	3.22	1.55	0.64	0.39	0.24	0.16	0.05			25
26	0.20	3.47	5.33	3.16	1.55	0.64	0.39	0.24	0.16	0.05			26
27	0.25	3.89	5.19	3.10	1.50	0.64	0.39	0.24	0.13	0.05			27
28	0.42	4.22	5.12	3.10	1.45	0.60	0.37	0.24	0.13	0.05			28
29	0.57		5.05	2.98	1.35	0.60	0.37	0.24	0.10	0.05			29
30	0.60		4.98	2.92	1.35	0.60	0.37	0.21	0.10	0.05			30
31	0.66		4.84		1.30		0.37	0.21		0.05			31
TOTAL	2.70	54.48	16.82	115.00	62.91	23.34	14.36	9.00	5.41	2.15			
AVERAGE	0.08	1.87	5.42	3.83	2.02	0.77	0.46	0.29	0.18	0.06			

Annual Total (cu.m.s.-day) 306.188

DISCHARGE (6) STATION SARACOCHA

COMPUERTA RIVER, IN THE BASIN OF ELEVATION 4,300 m UNIT cu. m. s. YEAR 1964

DATE	JAN.	FEB.	MAR.	APR.	MAY	JUNE	JULY	AUG.	SEPT.	OCT.	NOV.	DEC.	DATE
1			0.07	0.11	0.05								1
2			0.07	0.11	0.05								2
3			0.07	0.11	0.05								3
4			0.08	0.11	0.05								4
5			0.08	0.11	0.05								5
6			0.08	0.10	0.05								6
7			0.07	0.10									7
8			0.07	0.10									8
9			0.07	0.10									9
10			0.07	0.10									10
11			0.07	0.10									11
12			0.08	0.10									12
13			0.08	0.10									13
14			0.08	0.10									14
15			0.11	0.10									15
16		0.05	0.11	0.10									16
17		0.05	0.11	0.10									17
18		0.05	0.11	0.07									18
19		0.05	0.11	0.07									19
20		0.05	0.11	0.07									20
21		0.05	0.15	0.07									21
22		0.05	0.15	0.07									22
23		0.05	0.15	0.05									23
24		0.05	0.15	0.05									24
25		0.05	0.15	0.05									25
26		0.05	0.15	0.05									26
27		0.05	0.15	0.05									27
28		0.06	0.15	0.05									28
29		0.06	0.15	0.05									29
30			0.15	0.05									30
31			0.15										31
TOTAL		0.73	3.46	2.56	0.30								
AVERAGE		0.02	0.11	0.08	0.01								

Annual Total (cu.m.s.-day 7.059

DISCHARGE (7) STATION PTE. CARRETERA

ILAVE RIVER, IN THE BASIN OF _____ ELEVATION 3,830 m UNIT cu. m. s. YEAR 1956

DATE	JAN.	FEB.	MAR.	APR.	MAY	JUNE	JULY	AUG.	SEPT.	OCT.	NOV.	DEC.	DATE
1				10.90		8.00	5.90	2.05				6.20	1
2				10.45		8.00	5.55	2.05				6.20	2
3				10.45		7.50	5.55	2.05				6.20	3
4				10.45		7.50	5.55	2.05				6.60	4
5				10.10		7.50	5.55	2.05				6.70	5
6				10.10		7.50	5.30	1.80				6.60	6
7				10.10		6.90	5.30	1.80				6.50	7
8				9.80		6.90	5.30	1.80				6.50	8
9				9.80		6.90	5.30	13.90				6.20	9
10				9.30		6.90	4.85	13.20				5.80	10
11				9.30		6.90	4.85	12.90				5.80	11
12				9.30		6.90	4.50	12.90				5.25	12
13				9.00		6.90	4.50	12.30				5.60	13
14				9.00		6.90	4.50	12.30				5.10	14
15				9.00		6.70	4.20	11.70				5.10	15
16				8.80		6.70	4.20	11.15				5.40	16
17				8.80		6.70	4.20	10.90				6.50	17
18				8.80		6.70	3.90	10.50				6.20	18
19				8.30		6.70	3.90	10.10				8.30	19
20				8.30		6.70	3.90	9.40				8.75	20
21				8.30		6.40	3.90	9.40				9.10	21
22				8.00		6.40	3.50	9.05				10.15	22
23				8.00		6.40	3.50	8.80				9.85	23
24				7.50		6.40	3.20	8.40				10.00	24
25				7.50		6.10	3.20	8.40				8.10	25
26				7.50		6.10	3.20	8.00				9.70	26
27				7.50		6.10	2.85	7.65				11.40	27
28				7.50		6.10	2.85	6.90				10.70	28
29				7.50		5.90	2.85	6.70				10.50	29
30				7.50		5.90	2.85	6.70				10.30	30
31							2.40	6.55				10.15	31
TOTAL				266.85		203.20	131.10	243.80				235.45	
AVERAGE				8.89		6.67	4.22	7.86				7.59	

Annual Total ( )

DISCHARGE (7) STATION PTE. CARRETERA

TIAVE RIVER, IN THE BASIN OF ELEVATION 3,830 m UNIT cu. m. s. YEAR 1957

DATE	JAN.	FEB.	MAR.	APR.	MAY	JUNE	JULY	AUG.	SEPT.	OCT.	NOV.	DEC.	DATE
1	12.00	34.10	45.00	32.80	11.75	6.30	8.80	6.00	6.60	2.50	2.50	3.50	1
2	12.00	30.90	45.70	32.80	11.75	6.30	5.80	6.00	6.20	2.50	2.50	3.50	2
3	12.00	33.50	46.20	31.50	11.75	6.30	8.80	6.00	5.40	2.50	8.75	3.50	3
4	12.60	26.60	47.60	30.20	10.20	6.30	8.10	6.00	5.40	2.50	8.10	3.50	4
5	10.00	24.20	49.70	30.20	8.40	6.30	7.70	6.30	4.50	3.00	5.40	3.50	5
6	10.00	20.80	53.50	28.00	8.40	6.30	7.00	6.30	4.50	3.50	4.50	3.50	6
7	9.80	17.60	50.60	26.60	7.70	6.30	7.00	6.30	4.50	3.50	3.50	5.40	7
8	9.80	20.00	49.40	26.60	7.30	8.40	7.00	6.30	4.50	4.50	3.50	5.40	8
9	9.40	21.40	51.20	26.20	7.00	8.40	7.00	6.30	3.50	5.40	3.00	4.50	9
10	9.40	25.30	48.60	26.20	7.00	8.40	7.00	6.30	3.50	3.50	3.00	3.50	10
11	9.40	33.60	45.80	24.80	8.10	8.40	7.00	6.30	3.50	3.50	3.00	3.50	11
12	9.00	47.90	45.80	24.80	9.10	8.10	7.00	6.30	6.20	3.50	2.50	3.50	12
13	9.00	77.00	48.60	19.40	9.10	8.10	6.70	6.30	8.10	3.50	2.50	3.00	13
14	9.00	120.60	50.60	13.00	9.10	8.10	6.70	6.30	11.50	3.00	3.00	3.00	14
15	8.80	92.00	59.40	13.00	8.80	8.40	6.70	6.30	10.15	3.00	3.50	2.50	15
16	8.40	100.50	49.40	13.00	8.80	8.40	6.70	6.30	8.80	2.50	3.50	2.50	16
17	8.10	139.60	45.80	13.00	8.10	8.80	6.70	6.30	7.40	2.50	3.00	2.50	17
18	8.10	86.00	44.00	13.00	7.70	8.80	6.70	6.30	6.20	4.50	3.00	3.00	18
19	7.30	66.50	42.50	13.00	7.70	9.50	6.70	6.30	4.50	4.50	3.00	3.50	19
20	7.30	56.00	39.40	12.70	7.30	10.95	6.30	6.30	3.50	5.40	3.00	4.50	20
21	7.30	51.50	34.80	12.70	7.30	11.30	6.30	6.30	3.50	8.10	2.50	5.40	21
22	7.70	49.40	33.60	12.70	7.30	10.95	6.30	6.30	3.50	8.10	2.50	6.20	22
23	7.30	47.90	32.80	12.70	7.30	10.60	6.30	6.30	3.50	7.50	3.00	15.00	23
24	7.70	45.80	32.10	12.70	7.30	10.60	6.30	6.30	3.50	6.20	3.50	22.70	24
25	9.20	44.50	32.10	12.70	6.30	10.25	6.30	6.30	3.00	5.40	3.50	22.20	25
26	9.90	43.20	32.10	12.40	6.30	10.25	6.30	6.30	3.00	4.50	3.50	30.10	26
27	9.90	42.50	32.10	12.40	6.30	10.25	6.30	6.30	2.50	4.50	3.50	34.40	27
28	12.30	42.50	32.10	12.00	6.30	10.25	6.30	6.30	2.50	3.50	3.50	40.70	28
29	20.00		32.10	11.75	6.30	9.90	6.30	6.30	2.50	3.00	3.50	39.30	29
30	20.80		32.10	11.75	6.30	9.20	6.30	6.30	2.50	3.00	3.50	43.30	30
31	22.80		29.40		6.30		6.30	6.30		3.00		35.60	31
TOTAL	326.30	1,441.40	1,314.10	574.60	248.35	260.40	213.70	194.10	148.45	126.10	107.25	366.20	
AVERAGE	10.52	51.47	42.39	19.15	8.01	8.68	6.89	6.26	4.94	4.06	3.57	11.81	

Annual Total (cu.m.s.-day) 5,329.950

DISCHARGE (7) STATION PTE. CARRETERA

ILAVE RIVER, IN THE BASIN OF ELEVATION 3,830 m UNIT cu. m. s. YEAR 1958

DATE	JAN.	FEB.	MAR.	APR.	MAY	JUNE	JULY	AUG.	SEPT.	OCT.	NOV.	DEC.	DATE
1	28.25	37.20	63.20	41.50	16.70	7.00	5.00	6.50	5.00	4.50	4.00	6.80	1
2	26.80	46.30	101.25	40.70	16.00	7.00	5.00	6.50	5.00	4.50	3.30	5.70	2
3	30.20	51.00	189.70	40.70	16.70	7.50	5.00	6.00	5.00	6.00	3.30	5.70	3
4	28.25	51.00	213.40	39.80	16.70	8.00	5.00	6.00	6.00	8.00	3.30	5.52	4
5	28.75	56.75	201.75	39.80	16.00	8.00	5.00	6.00	5.50	9.50	3.30	5.52	5
6	28.25	73.30	201.75	38.90	14.60	8.00	5.00	6.00	5.00	9.00	3.30	5.19	6
7	28.25	125.10	177.25	37.90	13.90	6.50	5.00	6.00	5.00	8.00	3.30	4.86	7
8	27.75	155.30	263.25	37.90	13.90	6.50	7.00	5.50	6.00	8.00	3.30	4.86	8
9	26.25	137.25	321.20	37.10	13.90	6.50	7.00	5.50	5.50	6.00	3.30	4.53	9
10	21.75	93.20	307.25	37.10	13.90	6.00	7.00	5.50	5.50	6.00	3.30	4.20	10
11	25.60	67.70	228.30	37.10	13.90	6.00	7.00	5.50	6.00	6.50	3.30	4.20	11
12	28.25	58.10	263.25	36.20	12.50	6.00	7.00	5.50	5.00	6.00	3.30	4.20	12
13	28.25	59.20	121.30	35.30	12.50	6.00	7.00	5.50	4.50	6.00	4.00	4.20	13
14	37.10	82.00	193.70	34.30	11.30	6.00	7.00	5.50	4.50	6.00	4.40	4.20	14
15	77.00	157.25	307.25	33.50	11.30	6.00	7.00	5.50	4.50	5.00	5.70	4.20	15
16	105.25	147.20	125.24	32.60	11.30	6.00	7.00	6.00	3.00	4.60	5.70	4.20	16
17	127.25	146.30	101.25	32.60	11.30	5.50	6.50	6.00	3.00	4.60	5.40	3.87	17
18	137.30	131.30	85.30	32.60	11.30	5.50	6.50	5.50	3.00	4.60	4.70	4.20	18
19	127.30	109.25	85.30	32.60	10.10	5.50	7.00	5.50	4.00	5.00	4.70	4.20	19
20	167.25	80.20	78.25	25.60	10.10	5.00	7.00	5.00	3.50	4.60	4.40	3.82	20
21	173.30	66.10	68.25	23.70	9.50	5.00	7.00	5.00	3.50	4.60	4.70	16.75	21
22	133.30	69.20	61.80	22.30	9.00	5.00	7.00	5.00	3.50	4.60	4.70	13.55	22
23	91.25	87.25	58.00	22.30	9.00	5.00	7.00	5.50	3.00	4.60	4.70	10.35	23
24	68.25	111.25	53.30	20.90	9.00	5.00	7.00	5.00	3.00	4.50	5.00	7.15	24
25	56.70	133.25	51.20	20.20	9.00	5.00	6.50	5.00	3.00	4.00	7.10	7.15	25
26	48.20	113.30	48.60	19.50	8.50	5.00	6.50	5.00	3.50	4.00	7.10	7.15	26
27	45.40	89.25	47.25	18.10	8.00	5.00	7.00	5.00	3.50	4.50	7.10	7.15	27
28	43.75	70.60	46.30	18.10	7.00	5.00	7.00	5.00	4.00	4.50	6.40	11.95	28
29	43.75		45.20	16.70	7.00	5.00	6.50	5.00	4.50	4.50	6.40	11.15	29
30	51.00		43.30	16.70	7.00	5.00	7.00	5.00	4.50	4.50	7.50	8.75	30
31	49.10		42.40		7.00		6.50	5.00		4.60		7.15	31
TOTAL	1,939.05	2,605.10	4,094.75	921.80	357.90	178.50	200.00	170.50	130.50	171.30	140.00	202.47	
AVERAGE	62.55	93.03	132.08	30.72	11.54	5.95	6.45	5.50	4.35	5.52	4.66	6.53	

Annual Total (cu.m.s.-day) 11,111.870

DISCHARGE (7) STATION PTE. CARRETERA

ILAVE RIVER, IN THE BASIN OF ELEVATION 3,830 m UNIT cu. m. s. YEAR 1959

DATE	JAN.	FEB.	MAR.	APR.	MAY	JUNE	JULY	AUG.	SEPT.	OCT.	NOV.	DEC.	DATE
1	7.50	12.90	61.80	42.00	16.10	8.86	6.82	5.50	5.00	5.00	2.50	6.50	1
2	7.50	27.00	48.20	48.20	14.80	8.86	8.86	6.82	5.00	4.00	2.50	7.50	2
3	7.50	29.70	45.00	44.00	14.80	8.86	8.86	6.82	5.00	3.50	2.50	7.00	3
4	7.50	20.70	61.80	40.00	12.80	8.86	8.52	6.82	5.00	3.00	2.50	7.00	4
5	7.00	17.40	135.39	38.00	14.15	8.86	8.52	6.82	5.50	2.50	2.50	7.50	5
6	6.00	14.80	216.24	36.00	14.80	8.86	6.82	5.50	2.50	2.50	2.50	10.50	6
7	5.50	12.30	248.58	35.10	16.10	8.52	8.18	6.82	5.50	2.50	2.00	9.90	7
8	5.50	16.10	278.22	40.00	14.80	8.52	8.18	6.48	5.00	4.50	2.00	9.30	8
9	6.50	24.90	345.60	46.00	14.80	8.52	6.82	6.48	5.00	6.50	2.50	7.50	9
10	6.50	28.80	256.66	42.00	13.50	8.18	5.46	6.48	5.00	6.00	2.50	6.50	10
11	6.50	32.40	318.65	40.00	12.90	8.52	5.46	6.14	5.50	6.50	2.50	5.50	11
12	6.00	40.00	264.75	40.00	12.30	8.86	5.46	6.14	5.50	6.00	2.50	4.50	12
13	6.50	40.00	183.90	42.00	12.30	8.86	5.80	6.14	5.50	5.50	2.00	4.50	13
14	7.50	37.00	270.14	44.00	12.30	8.86	5.80	6.14	5.50	4.50	2.00	4.00	14
15	9.30	23.50	221.63	44.00	12.30	8.86	6.48	6.14	5.00	4.50	2.00	4.00	15
16	11.70	20.00	130.00	39.00	12.30	8.86	7.50	6.14	5.00	4.00	2.00	5.00	16
17	10.50	20.70	96.80	36.00	12.30	8.86	7.50	6.14	5.00	3.50	2.00	7.00	17
18	9.30	18.70	87.00	36.00	12.30	8.52	7.50	6.14	5.00	3.50	2.00	7.50	18
19	8.10	18.05	77.05	34.20	12.30	8.52	7.50	6.14	5.00	3.50	2.00	12.30	19
20	7.50	19.35	67.80	31.50	11.70	8.52	7.16	6.14	7.00	3.50	2.00	24.20	20
21	7.50	27.90	63.00	28.80	11.10	8.52	7.16	6.14	12.30	3.50	2.50	27.90	21
22	7.50	41.00	59.40	27.00	11.10	8.52	7.16	6.14	12.90	3.50	3.00	22.10	22
23	7.50	52.60	55.90	25.60	10.50	8.52	7.16	6.14	10.50	3.50	3.50	20.00	23
24	7.00	51.50	50.40	25.60	12.30	8.18	7.16	6.14	8.90	3.00	4.00	26.30	24
25	5.50	40.00	46.00	24.90	12.30	8.52	7.16	6.14	7.50	3.00	4.00	30.60	25
26	5.50	38.00	43.00	24.20	12.30	8.52	7.16	6.14	7.50	3.00	3.50	48.20	26
27	5.50	41.00	40.00	23.50	12.30	8.86	7.16	5.80	7.00	3.00	3.50	59.40	27
28	6.00	43.00	38.00	23.50	9.20	8.86	7.16	5.80	7.00	2.50	3.50	80.50	28
29	10.50		39.00	25.60	11.10	8.86	7.16	6.14	7.00	2.00	3.50	84.40	29
30	12.30		40.00	20.00	11.10	8.86	6.14	6.14	7.00	2.00	3.50	156.00	30
31	14.80		39.00		9.20		7.16	5.50		2.00		150.00	31
TOTAL	239.50	799.30	3,928.92	1,040.70	394.15	260.36	224.34	194.80	193.40	116.00	79.50	863.10	
AVERAGE	7.72	28.54	126.73	34.89	12.71	8.67	7.23	6.28	6.44	3.93	2.65	27.84	

Annual Total (cu.m.s.-day) 8,340.070

DISCHARGE (7) STATION PTE. CARRETERA

HAVE RIVER, IN THE BASIN OF ELEVATION 3,830 m UNIT cu. m. s. YEAR 1960

DATE	JAN.	FEB.	MAR.	APR.	MAY	JUNE	JULY	AUG.	SEPT.	OCT.	NOV.	DEC.	DATE
1	130.00	95.15	35.10	28.80	13.50	9.30	7.50	4.50	7.00	11.50	2.50	30.00	1
2	166.00	105.05	35.10	28.80	12.90	9.30	7.50	4.50	7.00	11.00	3.00	25.00	2
3	116.00	154.00	33.30	32.40	12.30	9.30	7.50	5.50	7.00	11.00	3.00	23.00	3
4	96.80	110.00	31.50	27.00	12.30	8.70	7.50	6.00	5.50	10.00	3.00	20.00	4
5	90.90	78.20	28.80	24.90	12.30	8.70	7.30	6.50	4.50	10.00	3.00	20.00	5
6	90.90	74.75	25.60	21.40	12.30	8.70	7.30	7.50	4.50	10.00	3.00	20.00	6
7	87.00	79.35	24.20	20.00	11.70	8.70	7.30	7.00	5.00	10.00	3.00	20.00	7
8	85.70	63.00	22.80	18.05	11.70	8.70	7.00	6.50	5.00	9.00	3.00	20.00	8
9	71.30	52.60	21.40	16.75	11.10	8.70	7.00	6.50	5.00	9.00	3.00	18.00	9
10	128.00	48.20	20.00	16.75	11.10	7.50	7.00	6.50	4.50	9.00	3.00	17.00	10
11	242.00	46.00	20.00	16.10	11.10	7.00	6.80	6.50	5.00	9.00	2.80	15.00	11
12	278.00	44.00	18.70	14.80	11.10	7.00	6.80	6.50	6.00	9.00	2.80	13.00	12
13	270.00	44.00	17.40	15.45	11.10	7.00	6.80	6.50	6.00	8.00	2.80	11.50	13
14	244.00	59.40	17.40	16.75	11.10	7.00	6.80	5.50	6.00	8.00	3.00	10.50	14
15	270.00	116.00	16.75	17.40	10.50	7.00	6.80	5.00	6.00	8.00	3.00	10.50	15
16	190.00	156.00	16.10	16.75	9.90	7.00	6.80	5.00	6.20	8.00	4.50	10.00	16
17	166.00	154.00	15.45	13.50	9.90	7.00	7.00	5.00	6.20	7.00	11.00	9.00	17
18	194.00	122.00	14.80	12.30	9.90	7.00	7.00	5.00	6.50	7.00	15.00	7.50	18
19	214.00	100.10	14.80	12.30	9.30	7.00	7.00	4.50	7.50	6.50	11.50	6.50	19
20	150.00	80.50	14.15	12.90	9.30	7.00	6.80	4.50	7.50	6.00	10.50	6.50	20
21	110.00	71.30	14.15	16.10	9.30	7.10	7.00	4.50	9.00	4.00	10.50	6.00	21
22	126.00	69.00	14.80	18.05	9.30	7.10	7.00	6.00	9.00	4.00	8.50	5.50	22
23	116.00	57.00	14.80	17.40	9.30	7.50	6.70	6.50	9.00	4.00	7.50	4.50	23
24	112.00	59.40	16.10	16.75	9.30	7.50	6.70	6.50	9.00	4.00	6.50	4.50	24
25	83.10	52.60	15.45	15.45	9.30	7.50	6.80	6.00	8.50	3.50	6.00	4.00	25
26	73.60	49.30	17.40	14.80	9.30	7.50	6.80	6.00	8.80	3.00	7.50	4.50	26
27	130.00	44.00	22.10	13.50	9.30	7.50	6.80	6.50	9.20	3.00	11.50	5.50	27
28	150.00	42.00	24.20	12.90	9.30	7.50	6.80	7.00	10.00	3.00	28.00	6.00	28
29	132.00	39.00	24.20	13.50	10.40	7.50	6.80	6.50	11.00	3.00	40.00	6.50	29
30	103.40		24.20	14.80	10.40	7.50	6.80	6.50	15.00	2.50	35.00	9.00	30
31	90.90		28.80		10.40		6.80	6.50		2.50		11.50	31
TOTAL	4,507.60	2,275.90	659.55	536.35	330.00	231.80	216.50	183.50	216.40	213.50	257.41	380.50	
AVERAGE	145.40	78.47	21.27	17.87	10.64	7.72	6.98	5.91	7.21	6.88	8.58	12.27	

Annual Total (cu.m.s.-day 10,009.00

DISCHARGE (7) STATION PTE. CARRETERA

ILAVE RIVER, IN THE BASIN OF ELEVATION 3,830 m UNIT cu. m. s. YEAR 1961

DATE	JAN.	FEB.	MAR.	APR.	MAY	JUNE	JULY	AUG.	SEPT.	OCT.	NOV.	DEC.	DATE
1	16.60	59.22	62.48	43.13	11.84	9.52	7.78	6.06	6.06	6.44	5.30	13.90	1
2	14.80	57.87	74.31	38.56	11.26	9.52	7.20	6.06	6.06	7.20	6.06	11.84	2
3	18.40	68.00	100.30	34.88	11.26	9.52	7.20	6.06	5.68	7.20	5.68	11.84	3
4	20.20	76.10	82.64	30.28	10.68	9.52	7.20	6.06	5.68	6.82	5.30	11.84	4
5	18.40	76.10	79.82	25.68	11.26	8.94	7.20	5.68	5.68	6.82	4.92	10.10	5
6	17.50	101.24	72.50	24.76	11.26	8.94	7.20	5.68	5.68	6.82	4.92	10.10	6
7	23.84	106.84	75.20	22.84	10.68	8.94	6.82	5.68	5.68	6.82	5.30	10.10	7
8	29.38	110.57	68.00	24.76	10.68	8.36	6.82	5.68	5.68	6.82	5.68	10.10	8
9	25.68	154.79	73.40	23.84	10.10	8.36	6.06	5.68	6.06	6.82	6.82	10.10	9
10	22.00	167.66	77.00	22.00	10.68	7.78	6.44	5.68	5.68	6.44	13.00	6.44	10
11	22.00	129.05	95.60	21.10	11.84	7.20	6.44	5.68	6.44	6.44	18.40	10.68	11
12	24.76	91.92	89.16	20.20	14.80	7.20	6.82	5.68	6.82	6.06	17.50	22.00	12
13	20.20	97.48	69.80	20.20	14.80	7.20	6.82	5.68	6.82	5.68	17.50	45.86	13
14	18.40	122.12	57.87	21.10	14.80	7.20	6.82	5.68	6.06	5.30	15.70	38.56	14
15	13.90	113.28	52.29	28.44	22.00	7.20	6.44	5.68	5.68	5.30	11.84	34.88	15
16	12.42	97.48	46.77	35.80	24.76	7.20	6.44	6.44	5.30	5.68	10.10	33.04	16
17	11.84	90.08	43.13	37.64	22.92	7.20	6.44	7.20	5.68	5.68	9.52	49.50	17
18	13.90	77.00	42.22	36.72	20.20	7.20	6.44	7.20	5.68	5.68	14.80	67.80	18
19	21.10	77.00	39.48	31.20	17.50	7.20	6.44	7.20	6.44	5.68	15.70	80.76	19
20	22.00	75.20	36.72	25.68	15.70	7.20	6.44	6.82	6.44	5.68	15.70	82.64	20
21	22.00	61.56	34.88	22.00	16.60	7.20	6.44	6.44	6.44	4.54	12.42	99.36	21
22	20.20	62.48	33.04	21.10	15.70	7.20	6.06	6.44	6.82	4.16	10.10	95.60	22
23	19.30	77.00	33.04	13.90	14.80	7.20	5.78	5.68	6.82	4.54	10.10	75.20	23
24	27.52	78.88	32.12	18.40	13.90	8.94	5.78	5,68	6.82	5.68	8.36	126.08	24
25	44.04	66.16	31.20	18.40	12.42	9.52	6.06	5.68	7.20	5.30	10.68	124.10	25
26	95.60	60.64	30.28	16.60	11.84	8.36	6.44	5.68	7.20	5.30	19.30	153.80	26
27	110.52	62.48	36.72	14.80	10.68	7.78	6.44	5.30	7.20	6.06	19.30	157.76	27
28	108.68	75.20	40.40	14.80	10.68	7.78	6.44	5.30	6.82	6.06	20.20	136.97	28
29	78.88		44.04	13.00	10.68	7.78	6.44	5.30	6,44	5.68	20.20	126.08	29
30	56.94		47.68	12.42	11.26	7.78	5.68	5.30	6.44	5.68	12.80	121.13	30
31	56.94		51.36		11.84		6.06	6.06		5.30		121.00	31
TOTAL	1,027.99	2,493.35	1,753.45	735.23	429.42	24.09	203.08	182.44	187.50	183.68	355.20	1,911.16	
AVERAGE	66.83	89.04	56.56	24.50	13.85	8.03	6.55	5.95	6.25	5.93	11.84	61.65	

Annual Total (cu.m.s.-day) 9,705.440

DISCHARGE (7) STATION PTE. CARRETERA

TIAVE RIVER, IN THE BASIN OF ELEVATION 3,830 m UNIT cu. m. s. YEAR 1962

DATE	JAN.	FEB.	MAR.	APR.	MAY	JUNE	JULY	AUG.	SEPT.	OCT.	NOV.	DEC.	DATE
1	175.00	160.00	126.00	64.70	19.60	13.60	11.20	10.40	7.00	8.00	4.60	4.45	1
2	180.00	152.50	144.00	72.80	19.00	13.60	11.20	10.40	7.00	8.00	4.30	6.20	2
3	134.00	275.00	175.00	86.00	18.40	12.80	11.20	10.00	7.60	7.65	4.30	6.20	3
4	202.50	351.00	270.00	78.80	18.40	12.80	11.20	10.00	9.40	7.65	4.00	7.50	4
5	222.50	434.00	230.00	69.20	17.20	12.80	11.20	10.00	11.20	7.30	3.88	8.50	5
6	242.50	446.00	235.00	69.20	17.20	12.80	11.20	9.40	11.60	7.30	3.88	10.00	6
7	257.50	416.00	255.00	68.00	17.20	12.80	11.20	9.40	11.60	7.30	3.60	6.20	7
8	335.00	340.00	275.00	59.20	17.20	12.80	11.20	8.20	11.20	7.30	3.60	7.00	8
9	395.00	299.00	250.00	57.00	16.60	12.80	11.20	8.20	8.20	7.30	3.60	7.00	9
10	512.00	225.00	190.00	55.20	16.00	12.80	11.20	8.20	9.40	7.30	3.60	7.00	10
11	330.00	122.00	170.00	49.80	16.00	13.20	11.20	7.60	9.40	6.70	3.88	6.20	11
12	232.50	118.00	165.00	48.90	16.00	13.20	11.20	8.20	10.40	6.65	3.88	6.20	12
13	250.00	124.00	146.00	62.50	16.00	13.60	11.20	9.40	11.20	6.65	3.60	7.00	13
14	240.00	102.50	134.00	59.20	16.00	13.60	11.20	9.40	11.20	6.65	3.60	9.50	14
15	227.50	101.00	128.00	53.40	16.00	13.20	11.20	9.40	10.80	6.60	3.60	14.00	15
16	195.00	96.50	102.50	51.60	15.60	12.80	11.20	9.40	9.40	6.30	4.70	15.50	16
17	190.00	83.00	95.00	48.00	15.60	11.60	11.20	9.40	9.40	6.30	5.40	16.20	17
18	155.00	81.50	92.00	44.00	15.20	12.40	11.20	9.40	9.40	6.30	6.60	15.50	18
19	136.00	90.50	65.80	41.00	15.20	12.40	10.80	8.80	8.80	7.40	8.05	13.20	19
20	146.00	144.00	63.60	40.00	14.80	11.60	10.80	8.20	8.80	6.30	7.00	12.50	20
21	136.00	112.00	62.50	37.20	14.80	11.60	10.80	8.20	8.20	7.40	6.20	13.20	21
22	124.00	114.00	61.40	36.40	14.80	11.60	10.80	8.20	8.20	6.65	4.70	21.50	22
23	107.00	114.00	59.20	36.40	14.80	11.20	10.80	8.20	7.60	6.60	4.70	43.20	23
24	102.50	146.00	55.20	34.80	14.80	11.20	11.20	7.60	7.00	6.60	4.70	57.00	24
25	80.00	180.00	63.60	34.00	14.40	11.20	11.20	7.60	7.00	6.60	4.72	68.00	25
26	92.00	180.00	70.40	32.40	14.40	11.20	11.20	7.00	7.00	6.30	4.45	85.00	26
27	130.00	142.00	66.90	30.80	14.40	11.20	10.80	7.00	7.00	6.30	4.45	68.00	27
28	130.00	150.00	58.10	30.80	14.40	11.20	10.80	7.00	7.00	5.40	4.72	57.00	28
29	138.00		59.20	19.60	14.00	11.20	10.80	7.00	7.00	4.60	4.45	46.50	29
30	148.00		59.20	19.60	14.00	11.20	10.80	7.00	7.00	4.60	4.45	39.20	30
31	207.50		60.30		13.60		10.80	7.00		4.60		35.20	31
TOTAL	6,153.00	5,299.50	3,987.90	1,490.50	491.60	370.00	343.20	265.20	266.00	206.60	137.21	719.65	
AVERAGE	198.48	189.26	128.64	49.68	15.85	12.33	11.07	8.55	8.86	6.66	4.57	23.21	

Annual Total (cu.m.s.-day) 19,730.360

DISCHARGE (7) STATION PTE. CARRETERA

ILAVE RIVER, IN THE BASIN OF _____ ELEVATION 3,830 m UNIT cu. m. s. YEAR 1963

DATE	JAN.	FEB.	MAR.	APR.	MAY	JUNE	JULY	AUG.	SEPT.	OCT.	NOV.	DEC.	DATE
1	32.80	548.00	420.00	103.00	46.00	22.20	15.60	12.60	11.00	10.00	10.50	10.00	1
2	38.40	779.00	375.60	97.40	44.00	22.20	15.60	12.50	10.50	9.50	11.00	10.00	2
3	40.00	620.00	420.00	13.40	42.00	20.80	15.60	12.00	10.50	9.00	10.00	12.60	3
4	37.60	426.20	332.20	89.60	40.20	20.10	15.50	12.00	10.00	9.00	9.50	14.40	4
5	34.40	381.80	266.20	118.20	24.80	20.10	15.50	12.00	9.50	9.00	9.00	13.20	5
6	52.00	521.60	250.60	129.40	35.70	20.10	15.50	12.00	9.50	9.50	9.00	13.20	6
7	77.40	693.00	250.60	112.00	35.70	20.80	14.40	12.00	10.00	9.50	10.00	27.40	7
8	67.80	598.40	238.20	98.70	33.00	20.80	15.00	11.50	10.00	9.00	9.50	26.50	8
9	67.80	394.40	263.00	85.80	33.00	20.80	15.00	11.50	10.00	9.50	9.00	33.00	9
10	89.60	357.00	272.60	82.20	32.20	19.40	15.00	11.50	10.00	12.60	8.00	42.00	10
11	131.00	272.60	313.60	75.00	31.40	19.40	14.40	11.50	12.60	12.60	7.50	48.00	11
12	84.60	226.00	307.40	69.00	29.80	19.40	13.80	11.00	18.00	13.80	7.00	42.00	12
13	115.00	208.00	275.80	65.40	29.00	19.40	13.80	11.00	23.60	17.40	7.00	43.00	13
14	147.00	211.00	319.80	65.40	28.20	18.00	13.20	11.00	20.10	17.40	6.65	40.00	14
15	167.10	229.00	269.40	66.60	28.20	18.00	13.20	11.00	18.00	15.00	6.30	37.50	15
16	143.00	266.20	263.00	65.40	27.40	18.00	13.20	11.00	16.80	13.20	6.30	41.10	16
17	167.40	423.10	220.00	75.00	27.40	18.00	13.20	11.00	16.20	12.60	6.65	44.00	17
18	220.00	548.00	208.00	67.80	26.60	18.00	13.20	11.00	15.60	12.60	6.30	37.50	18
19	263.00	470.20	211.00	57.50	29.00	18.00	13.20	11.00	15.00	12.60	5.95	29.80	19
20	160.20	495.80	256.80	52.00	29.00	18.00	13.20	11.00	15.00	12.60	5.60	25.00	20
21	147.00	326.00	220.00	52.00	27.40	18.00	13.20	11.00	13.80	12.60	5.95	24.30	21
22	131.00	489.40	174.00	61.90	25.80	18.00	13.20	11.00	12.60	12.60	5.95	21.50	22
23	143.00	515.00	164.80	66.60	25.00	18.00	12.60	10.50	11.50	12.00	5.95	21.50	23
24	167.10	451.00	139.00	60.80	24.30	18.00	12.60	10.50	11.00	11.00	6.30	20.10	24
25	208.00	457.40	126.20	61.90	23.60	18.00	12.60	10.00	10.00	11.00	6.65	16.80	25
26	295.00	457.40	116.60	57.50	23.60	18.00	12.60	10.00	10.00	10.50	7.00	15.00	26
27	288.60	457.40	127.80	54.20	23.60	17.40	13.20	10.50	9.00	10.00	7.00	15.60	27
28	313.60	420.00	141.00	52.00	22.90	16.80	13.80	11.00	9.50	10.00	8.00	11.70	28
29	229.00		129.40	52.00	23.60	16.20	13.80	11.00	10.00	10.00	10.50	19.40	29
30	174.00		121.40	49.00	22.90	15.60	13.20	11.00	10.00	10.00	11.00	19.40	30
31	275.80		100.00		23.60		13.20	10.50		10.00		18.70	31
TOTAL	4,507.90	12,242.90	7,294.00	2,226.70	928.90	565.50	431.10	347.10	379.30	356.10	235.05	301.20	
AVERAGE	145.41	394.93	235.29	74.22	29.96	18.85	13.90	11.19	12.64	11.48	7.83	25.84	

Annual Total (cu.m.s.-day) 30,315.750

DISCHARGE (7) STATION PTE. CARRETERA

IIAVE RIVER, IN THE BASIN OF ELEVATION 3,830 m UNIT cu. m. s. YEAR 1964

DATE	JAN.	FEB.	MAR.	APR.	MAY	JUNE	JULY	AUG.	SEPT.	OCT.	NOV.	DEC.	DATE
1	16.20	13.40	45.10	27.50	16.10	14.30	9.70	7.80	7.00	7.62	6.06	6.06	1
2	13.80	16.55	45.10	35.70	16.10	13.85	9.30	7.10	7.80	7.29	6.06	6.06	2
3	11.50	21.00	42.25	28.50	14.30	12.95	9.30	7.10	7.00	7.29	6.06	6.30	3
4	10.50	30.30	36.60	27.20	14.30	12.50	9.30	7.10	7.00	7.29	6.06	7.29	4
5	16.10	44.15	36.60	25.90	13.40	12.10	9.30	7.10	7.00	7.29	6.06	7.29	5
6	16.10	47.00	39.40	24.60	13.40	11.70	9.30	7.10	6.96	7.29	6.06	5.82	6
7	22.00	54.70	41.30	23.30	12.95	10.90	9.30	8.60	6.96	7.29	6.06	5.82	7
8	36.60	60.10	37.50	22.00	12.95	11.70	9.30	9.30	6.96	7.29	6.63	5.82	8
9	44.15	55.80	35.70	22.65	12.95	11.70	8.90	8.50	6.96	7.29	6.63	5.82	9
10	44.15	46.05	37.50	24.60	10.50	11.30	8.90	8.50	6.96	7.29	6.96	5.82	10
11	55.80	40.35	38.45	24.60	12.50	10.90	8.90	8.90	8.36	6.96	10.00	5.82	11
12	52.50	41.30	43.20	22.65	12.10	10.90	8.90	9.30	9.18	6.63	9.59	5.82	12
13	45.10	97.00	40.35	24.60	11.70	10.90	8.90	8.90	9.18	6.63	8.77	6.63	13
14	38.45	184.60	38.45	23.95	11.30	10.50	8.50	8.90	10.00	6.63	8.77	7.29	14
15	30.30	66.40	45.10	23.30	11.30	10.90	8.50	8.90	10.00	6.30	7.62	7.29	15
16	27.20	158.00	49.20	21.50	10.90	10.90	8.50	8.50	9.59	6.30	6.63	7.29	16
17	26.55	132.00	79.00	20.00	11.30	10.90	8.50	8.50	9.18	6.30	6.63	7.29	17
18	25.25	111.60	91.00	19.50	12.95	10.10	8.50	8.50	9.18	6.06	6.63	7.62	18
19	22.00	99.00	70.60	19.00	12.95	10.10	8.50	8.50	9.18	6.06	6.96	8.35	19
20	18.50	140.00	70.60	20.00	14.30	10.10	8.50	8.15	8.77	6.06	6.96	9.18	20
21	17.00	156.00	81.00	21.50	15.20	9.70	8.50	8.15	8.77	6.06	6.96	10.00	21
22	16.55	103.20	72.70	22.00	13.85	10.50	8.50	8.15	8.77	6.06	6.30	10.00	22
23	16.10	81.00	74.80	21.50	14.30	10.10	8.50	8.15	8.77	6.06	6.06	10.00	23
24	16.10	74.80	64.30	20.00	16.10	10.10	8.15	8.50	8.36	6.06	6.06	10.00	24
25	16.55	66.40	70.60	19.50	15.65	10.10	8.15	8.50	8.36	5.82	5.58	10.40	25
26	16.55	60.10	79.00	19.00	14.75	10.10	8.50	8.50	8.36	5.82	5.82	11.20	26
27	16.10	56.90	60.10	19.00	14.30	10.10	8.15	8.50	7.95	5.82	5.82	13.25	27
28	15.65	53.60	54.70	19.00	14.30	10.10	8.15	8.15	7.95	5.58	5.82	14.10	28
29	14.75	47.00	47.00	18.00	14.30	10.10	7.80	8.15	7.95	5.58	6.06	13.65	29
30	14.30		44.15	16.55	14.30	9.70	7.80	8.15	7.62	5.58	6.30	12.00	30
31	13.40		41.30		12.50		7.80	7.80		5.58		11.20	31
TOTAL	722.70	2,158.30	1,652.65	686.75	419.80	329.80	268.80	255.85	245.28	201.81	201.98	260.48	
AVERAGE	23.31	74.42	53.31	22.89	13.54	10.93	8.67	8.25	8.17	6.51	6.73	8.40	

Annual Total (cu.m.s.-day 7,404.200

DISCHARGE (7) STATION PTE. CARRETERA

ILAVE RIVER, IN THE BASIN OF ELEVATION 3,830 m UNIT cu. m. s. YEAR 1965

DATE	JAN.	FEB.	MAR.	APR.	MAY	JUNE	JULY	AUG.	SEPT.	OCT.	NOV.	DEC.	DATE
1	10.00	30.00	28.60	21.00	10.00	6.43	7.40	7.35	6.00	5.00	3.85	4.20	1
2	10.00	25.50	27.20	24.20	9.60	6.43	7.40	7.35	6.00	5.00	3.85	4.20	2
3	8.50	23.00	30.40	27.20	9.00	6.30	7.24	7.35	6.00	5.10	3.75	5.10	3
4	8.50	21.00	33.60	29.00	9.00	7.40	7.24	7.00	6.00	5.10	3.85	6.10	4
5	9.00	17.80	33.20	26.00	9.00	7.57	7.24	7.00	9.00	6.00	3.80	6.50	5
6	9.50	17.80	29.00	23.60	9.00	7.57	7.07	7.00	9.00	7.40	3.80	11.70	6
7	9.00	22.20	30.00	21.50	9.50	7.40	7.07	7.00	10.00	7.50	3.85	11.70	7
8	9.00	33.80	30.40	20.00	9.50	7.40	7.07	7.00	10.00	7.00	3.90	9.00	8
9	9.00	32.50	27.20	18.00	9.00	7.20	7.07	7.00	10.00	5.10	3.90	10.50	9
10	9.00	32.50	25.50	16.00	9.00	7.20	7.00	7.00	8.80	5.10	4.00	8.50	10
11	10.50	35.00	24.20	14.20	9.00	7.20	7.00	7.40	7.40	5.10	4.00	8.50	11
12	15.00	37.00	26.00	11.60	9.00	6.43	7.00	7.40	7.40	5.10	4.20	7.00	12
13	19.60	36.00	33.20	10.50	8.80	6.43	7.00	7.00	7.40	4.80	5.50	6.50	13
14	20.20	47.20	38.20	10.50	8.80	6.43	7.07	7.00	7.00	5.10	4.50	6.50	14
15	20.20	44.20	42.00	12.50	8.80	6.43	7.24	5.80	8.80	6.00	4.50	7.00	15
16	19.00	42.80	39.00	12.50	8.00	6.43	7.24	5.80	8.40	6.00	5.50	9.00	16
17	15.60	51.20	37.60	12.50	7.40	6.43	7.40	5.80	9.50	5.10	6.00	11.70	17
18	15.00	52.00	36.40	12.50	7.40	6.43	7.55	5.80	10.00	5.10	6.00	15.00	18
19	15.00	56.50	33.60	12.50	7.40	7.24	7.55	5.80	10.00	5.00	6.00	14.00	19
20	15.60	69.00	31.00	12.50	7.00	7.24	7.07	5.80	9.50	4.90	5.50	14.00	20
21	16.40	62.00	26.80	11.60	7.00	6.78	7.07	5.80	9.00	4.50	4.80	14.00	21
22	16.40	59.00	23.00	11.60	7.00	6.78	7.07	5.80	8.50	4.50	4.80	21.60	22
23	13.10	55.00	21.50	11.60	7.00	6.28	7.07	5.80	8.00	4.50	4.50	38.50	23
24	15.00	57.40	28.00	11.00	7.00	6.78	7.00	5.80	7.50	4.50	4.50	32.00	24
25	15.00	57.40	28.00	11.00	7.00	6.78	7.00	5.80	7.50	4.50	4.50	32.00	25
26	26.80	47.20	27.20	10.50	7.00	6.78	6.89	5.50	6.10	4.00	4.20	21.00	26
27	35.50	41.20	24.80	10.00	7.00	6.78	6.89	5.80	6.10	3.90	4.20	16.00	27
28	36.40	36.40	23.60	10.00	7.00	7.24	6.89	5.50	5.00	3.90	4.20	14.30	28
29	34.50		25.00	10.00	7.00	7.24	6.72	5.50	5.00	3.90	4.20	17.50	29
30	32.00		23.60	10.00	7.00	7.24	6.72	5.35	5.00	3.90	4.20	23.00	30
31	30.60		19.00		7.00		6.72	5.35		3.90		21.00	31
TOTAL	525.90	1,145.60	904.30	456.20	251.20	206.83	220.08	196.65	234.40	156.50	134.35	434.60	
AVERAGE	16.96	40.91	29.17	15.20	8.10	6.89	7.10	6.34	7.81	5.04	4.47	14.01	

Annual Total (cu.m.s.-day) 4,866.621

DISCHARGE (7) STATION PTE. CARRETERA

ILAVE RIVER, IN THE BASIN OF ELEVATION 3,830 m UNIT cu. m. s. YEAR 1966

DATE	JAN.	FEB.	MAR.	APR.	MAY	JUNE	JULY	AUG.	SEPT.	OCT.	NOV.	DEC.	DATE
1	22.00	11.20	57.20	12.60	5.80	6.61	5.03	5.44	4.28				1
2	26.80	10.80	58.80	13.20	5.80	6.61	5.03	5.44	4.14				2
3	23.80	10.40	58.00	12.60	5.80	6.61	5.03	5.44	4.14				3
4	18.00	11.60	54.00	12.00	5.40	6.61	5.57	5.44	4.05				4
5	16.80	11.20	51.60	11.20	5.80	6.61	5.57	5.15	3.90				5
6	15.60	10.40	47.60	10.80	6.20	6.61	5.57	5.15	3.90				6
7	13.80	10.40	46.00	10.40	6.20	6.61	5.57	4.88	4.05				7
8	12.00	10.40	42.80	10.40	6.20	6.61	5.57	4.88	4.05				8
9	9.20	12.00	36.20	10.40	5.80	6.48	5.82	4.88	4.05				9
10	8.80	14.40	32.60	7.60	5.40	6.48	5.57	4.88	3.90				10
11	8.80	13.80	27.40	7.60	5.40	6.48	5.57	4.88	4.05				11
12	8.80	12.00	23.80	7.60	5.40	6.48	5.83	4.60	4.30				12
13	8.40	14.40	22.00	7.60	5.40	6.64	5.57	4.44	4.30				13
14	7.20	12.60	21.20	7.20	5.40	6.64	5.57	4.60	4.30				14
15	7.20	12.00	20.40	6.80	5.80	6.64	5.57	4.88	4.30				15
16	6.80	12.00	19.60	6.80	5.80	6.64	5.57	4.88	4.15				16
17	6.40	12.00	20.40	6.40	7.90	6.13	5.57	4.88	4.15				17
18	6.40	12.60	19.60	6.40	19.00	6.13	5.57	4.88	4.05				18
19	7.20	13.20	18.00	6.40	20.50	6.13	5.89	4.88	4.05				19
20	7.60	21.20	16.80	7.20	18.00	6.13	5.89	4.88	3.90				20
21	8.00	37.40	16.80	7.20	15.96	6.43	5.89	4.44	3.90				21
22	8.00	36.80	25.60	8.00	12.81	6.43	5.89	4.44	3.90				22
23	10.40	58.80	23.80	8.40	10.25	6.43	5.86	4.44	3.90				23
24	10.80	58.80	21.20	8.40	9.75	5.39	5.86	4.28	3.90				24
25	10.80	54.00	18.80	8.40	9.75	5.31	5.86	4.28	3.90				25
26	11.20	57.20	16.80	8.40	9.75	5.31	5.99	4.28	3.90				26
27	12.00	55.60	16.20	8.00	9.75	5.31	5.99	4.28	3.90				27
28	12.60	55.60	12.60	7.60	9.75	5.31	5.99	4.28	3.90				28
29	14.40		11.60	7.20	8.00	5.31	5.99	4.44	3.90				29
30	14.40		11.20	7.20	7.55	4.77	5.99	4.44	3.90				30
31	11.20		12.00		7.55		5.49	4.44					31
TOTAL	365.40	662.80	880.60	260.00	267.87	185.88	175.79	147.42	121.01				
AVERAGE	11.78	23.67	28.40	8.66	8.64	6.19	5.67	4.75	4.03				

Annual Total ( )

4. MASS CURVES

Fig. Ap-IV-4-1 Residual Mass Curve in Dam Site for Ilave Project

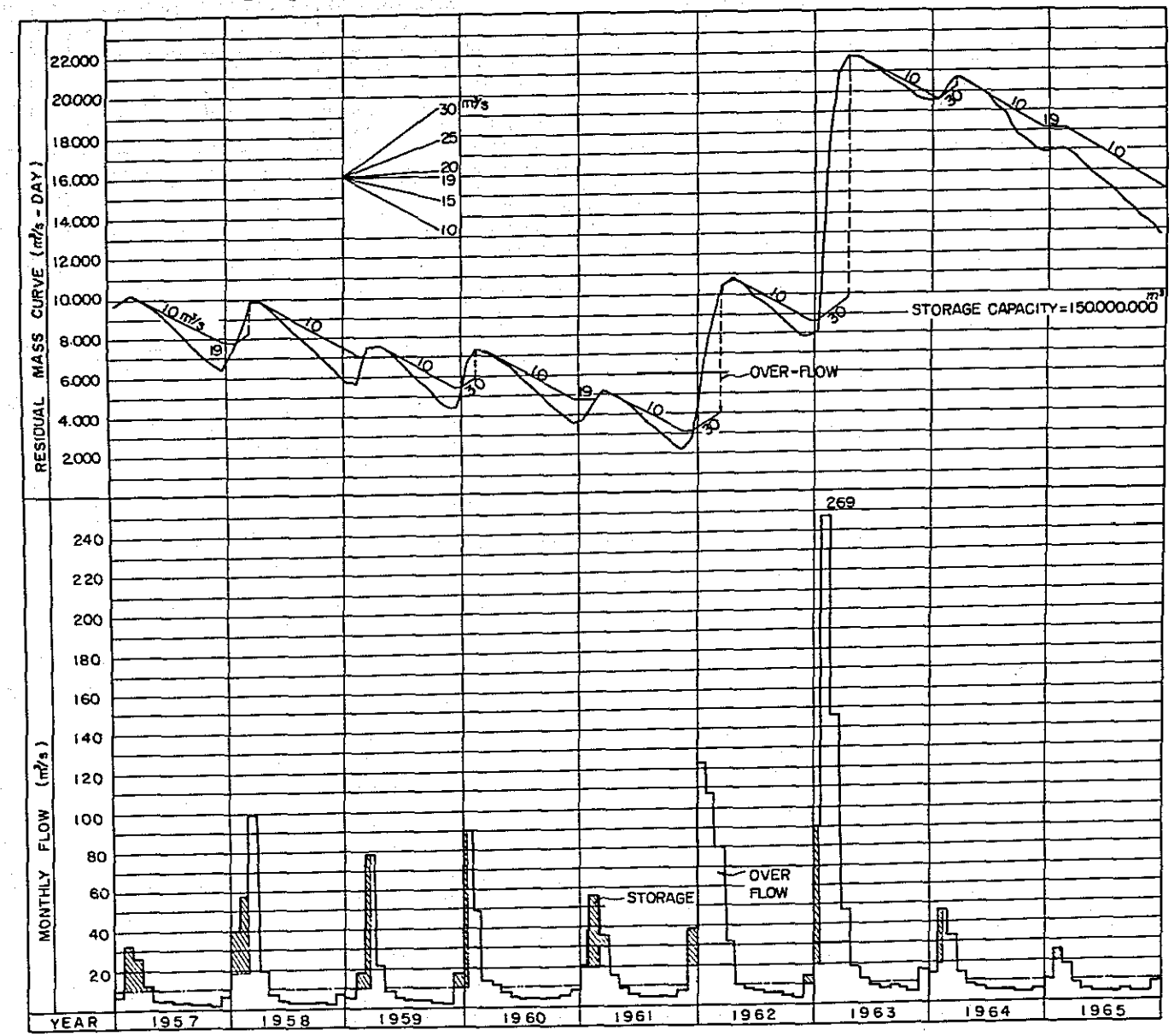

Fig. Ap-IV-4-2 Residual Mass Curve in La. Lagunillas & La. Saracocha for Tambo Project

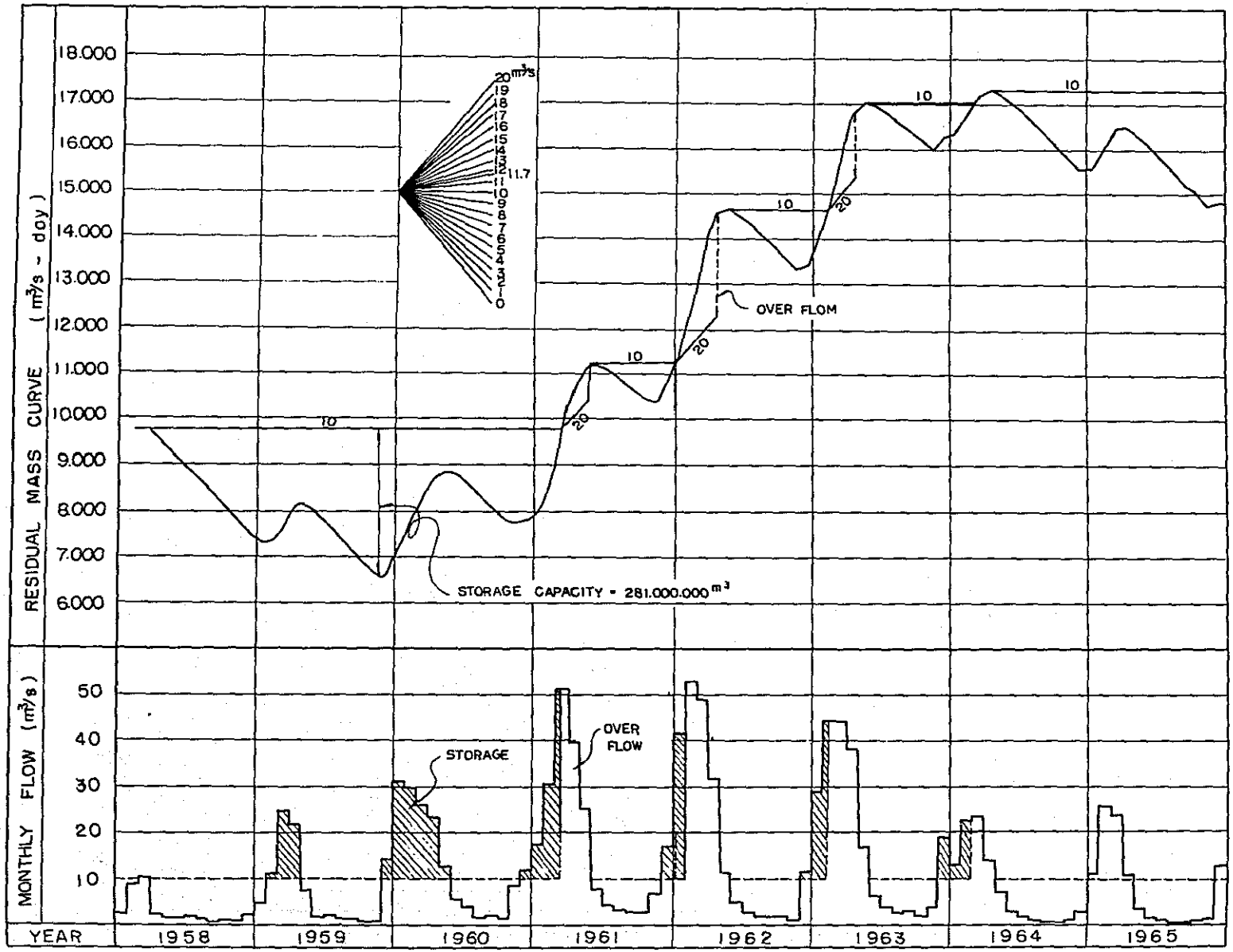

Fig. Ap-IV-4-3 Residual Mass Curve in La. Lagunillas for Lagunillas Project-1

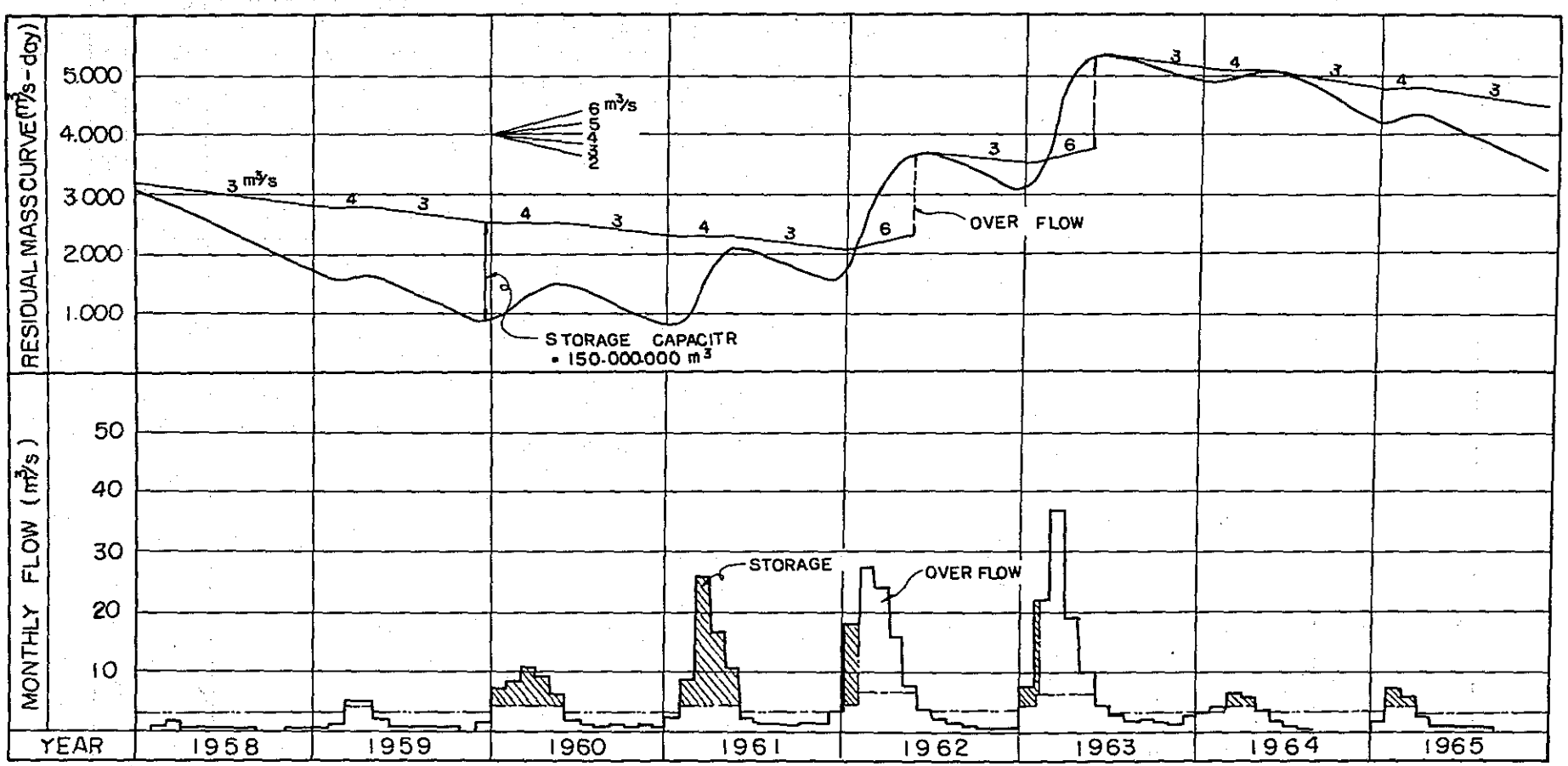

Fig. Ap-IV-4-4 Residual Mass Curve in La. Lagunillas for Lagunillas Project-2

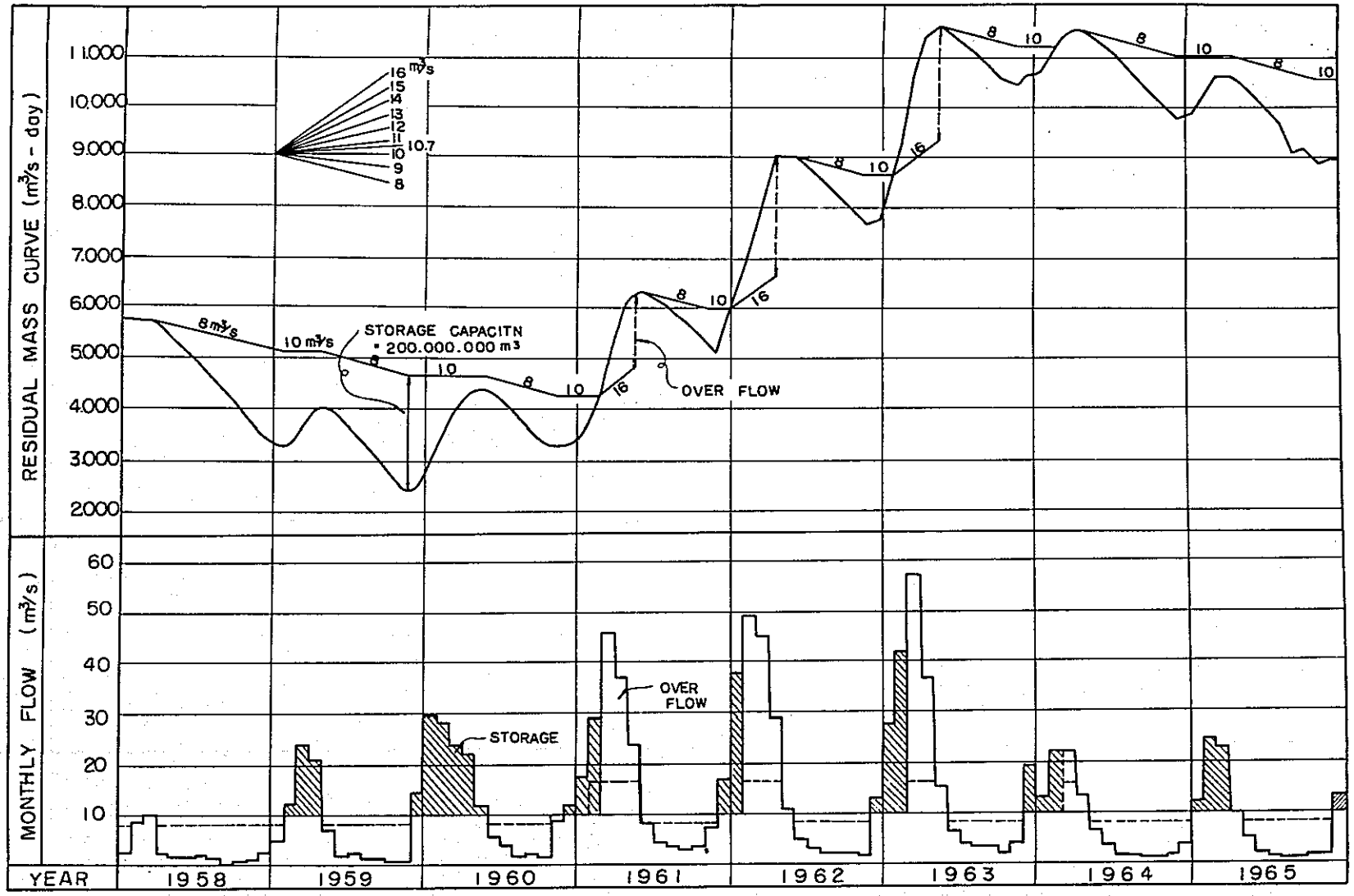

INCLUDING DIVERTED RUN-OFF OF RIO VERDE

Appendix V

Aricota－Puno 送電線予備設計図面

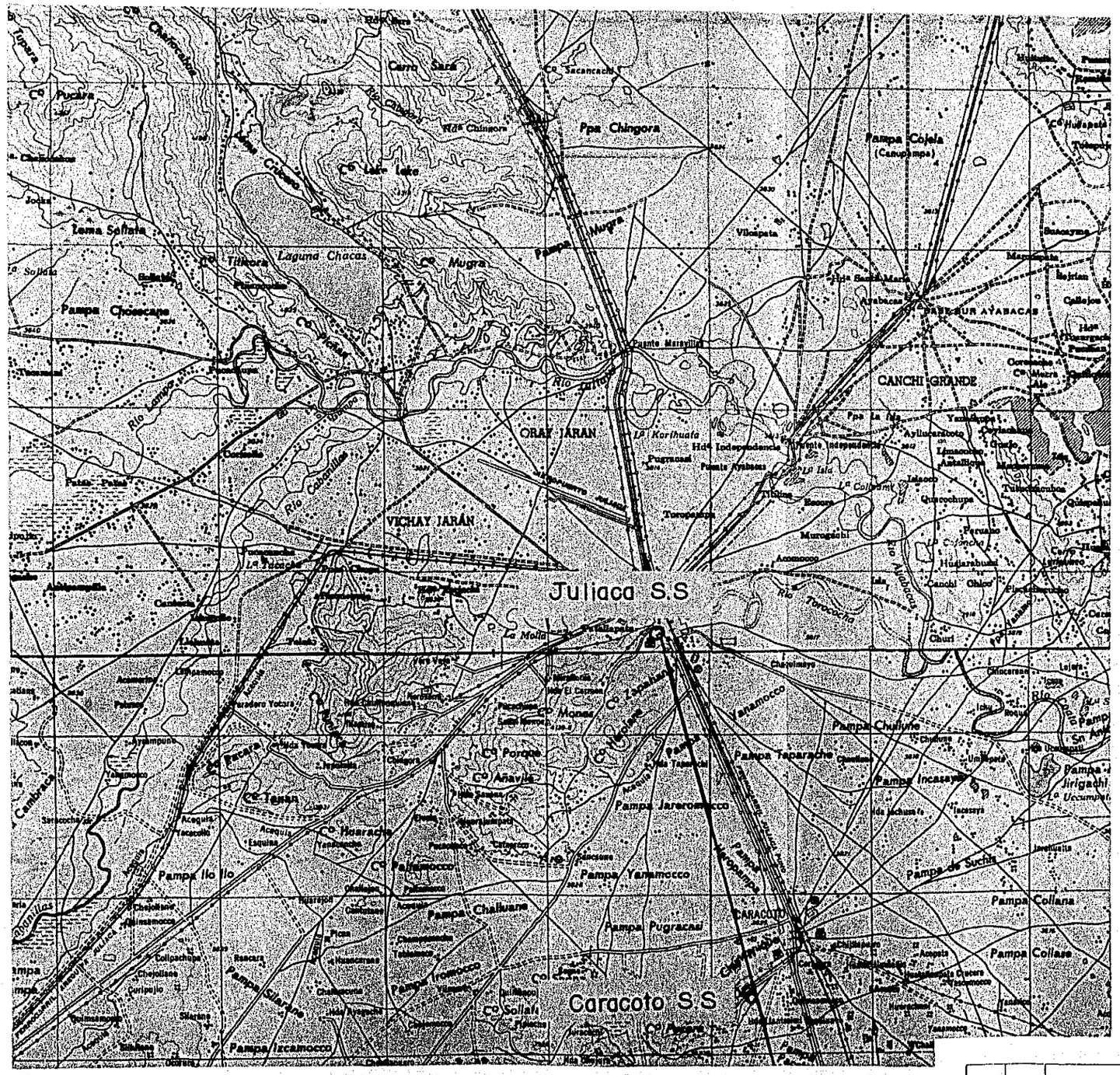

LEGEND

———— 66kV planning

-·-·-·-·-132 kV existing

------ 66 kV existing

1 : 100,000

2000 1000 0 2000 4000 6000

OVERSEAS TECHNICAL COOPERATION AGENCY,JAPAN

MINISTERIO de FOMENTO y OBRAS PUBLICAS
REPUBLICA del PERU

PUNO ELECTRIFICACION PROGRAM

TRANSMISSION
PLAN MAP
ARICOTA No.1 PS-JULIACA S.S

Fig. Ap-Ⅴ-1-1

T.Takenouchi
K Kaneko

REVISION	DATE	DESCRIPTION

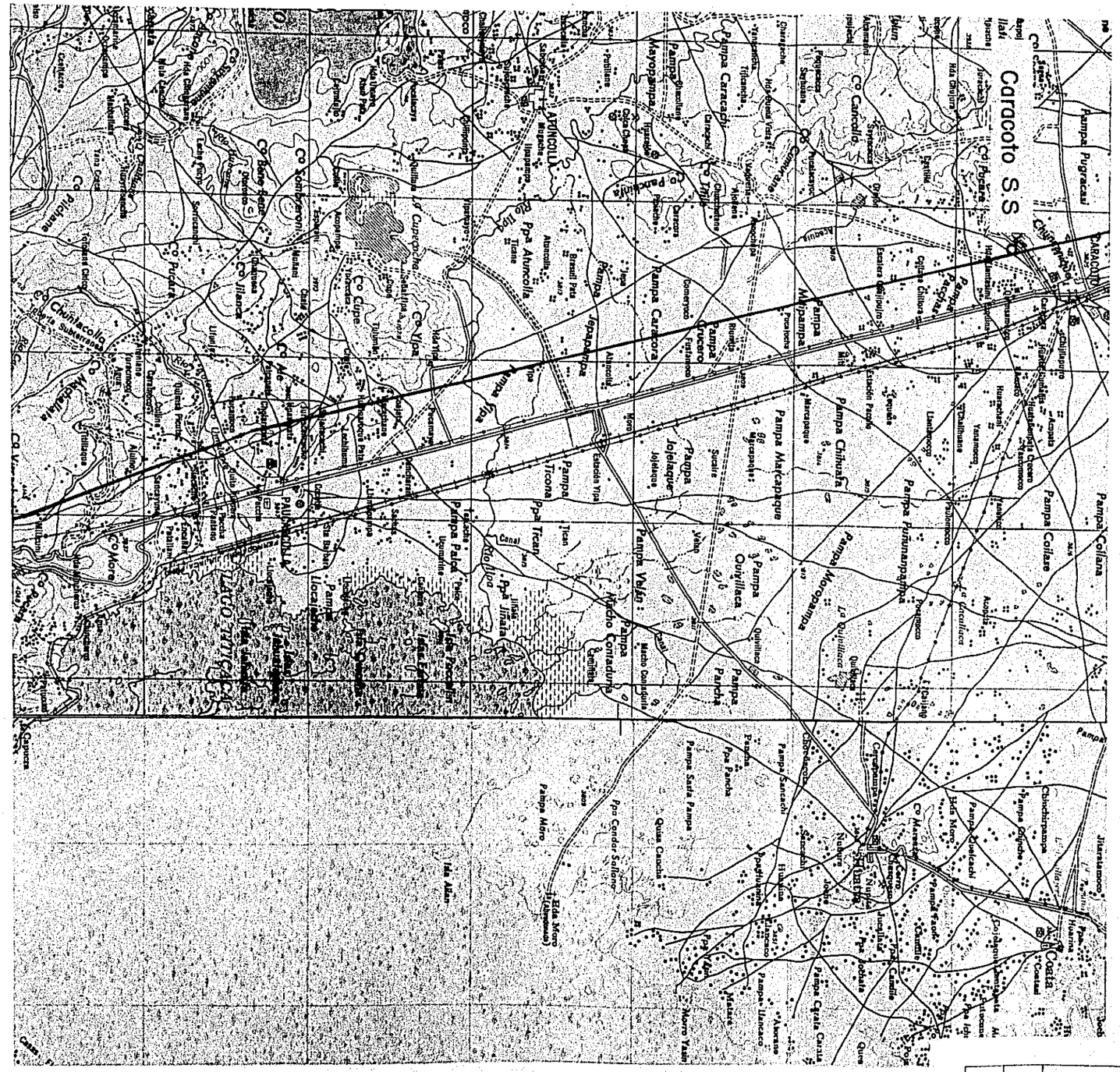

LEGEND

——— 66kV planning

– – – – 132 kV existing

- - - - - 66 kV existing

1 : 100,000

2000 1000 0 2000 4000 6000

REVISION	DATE	DESCRIPTION	BY

OVERSEAS TECHNICAL COOPERATION AGENCY, JAPAN

EPDC CONSULTANTS
ELECTRIC POWER DEVELOPMENT CO., LTD.
TOKYO JAPAN

MINISTERIO de FOMENTO y OBRAS PUBLICAS
REPUBLICA del PERU

PUNO ELECTRIFICACION PROGRAM

T. Takenouchi

APPROVED

CHIEF ENGINEER EPDC
DATE

TRANSMISSION PLAN MAP
ARICOTA No.1 P.S-JULIACA S.S

Fig. Ap-Ⅴ-1-2

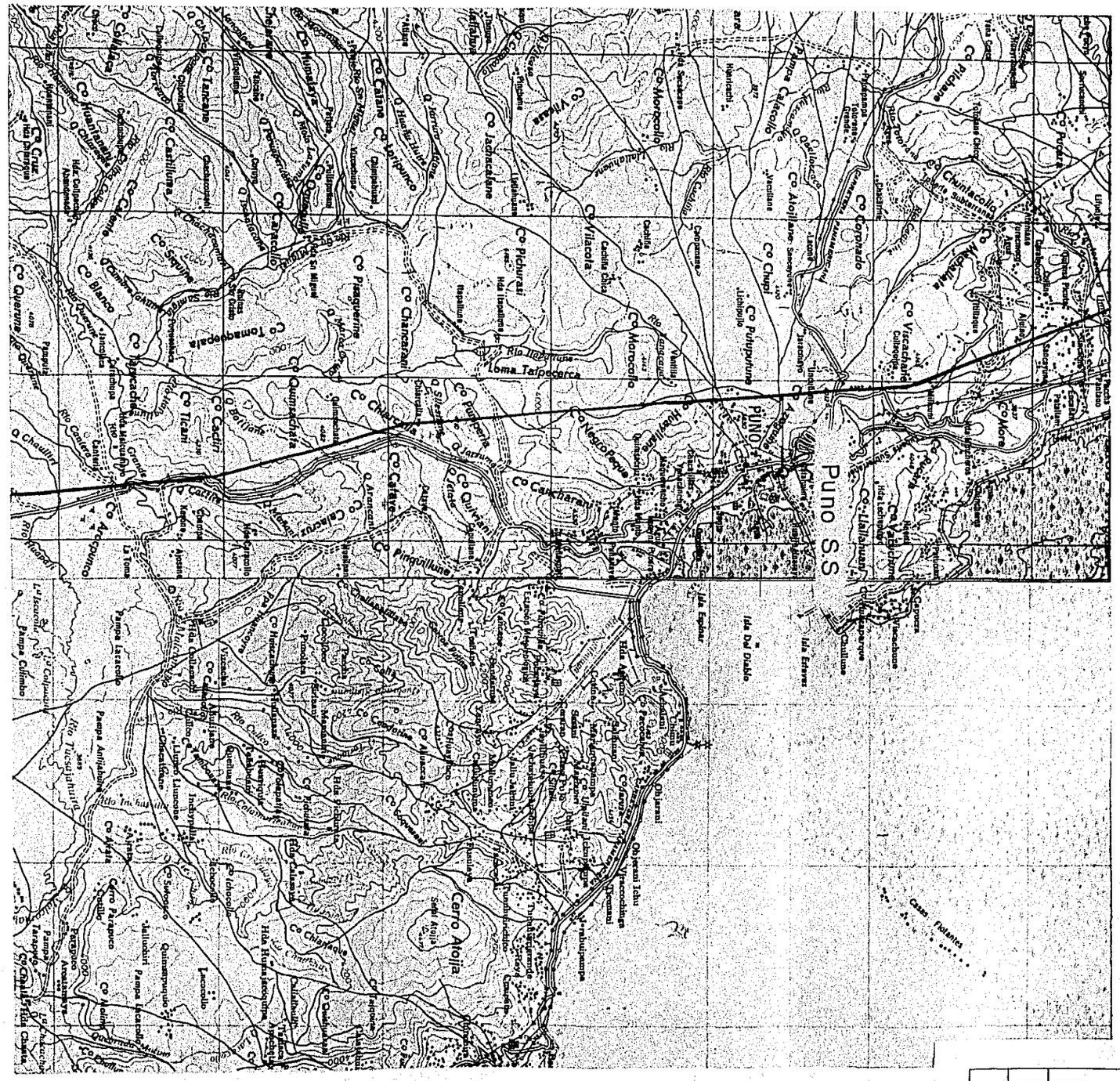

LEGEND

- ────── 66kV planning
- ─ ─ ─ ─132 kV existing
- - - - - - 66 kV existing

1 : 100,000

2000 1000 0 2000 4000 6000

OVERSEAS TECHNICAL COOPERATION AGENCY,JAPAN

EPDC CONSULTANTS (ELECTRIC POWER DEVELOPMENT CO.) TOKYO JAPAN

MINISTERIO de FOMENTO y OBRAS PUBLICAS
REPUBLICA del PERU

DRAWN: Yamura
CHECKED: M. Oeda
SUBMITTED: T. Takenouchi
RECOMMENDED: K. Kaneko
APPROVED: I. Asao
CHIEF ENGINEER EPDC
DATE:

PUNO ELECTRIFICACION PROGRAM

TRANSMISSION
PLAN MAP
ARICOTA No.1 P.S-JULIACA S.S

Fig. Ap- V-1-3

REVISION	DATE	DESCRIPTION	BY

電源開発株式会社
日本国 東京

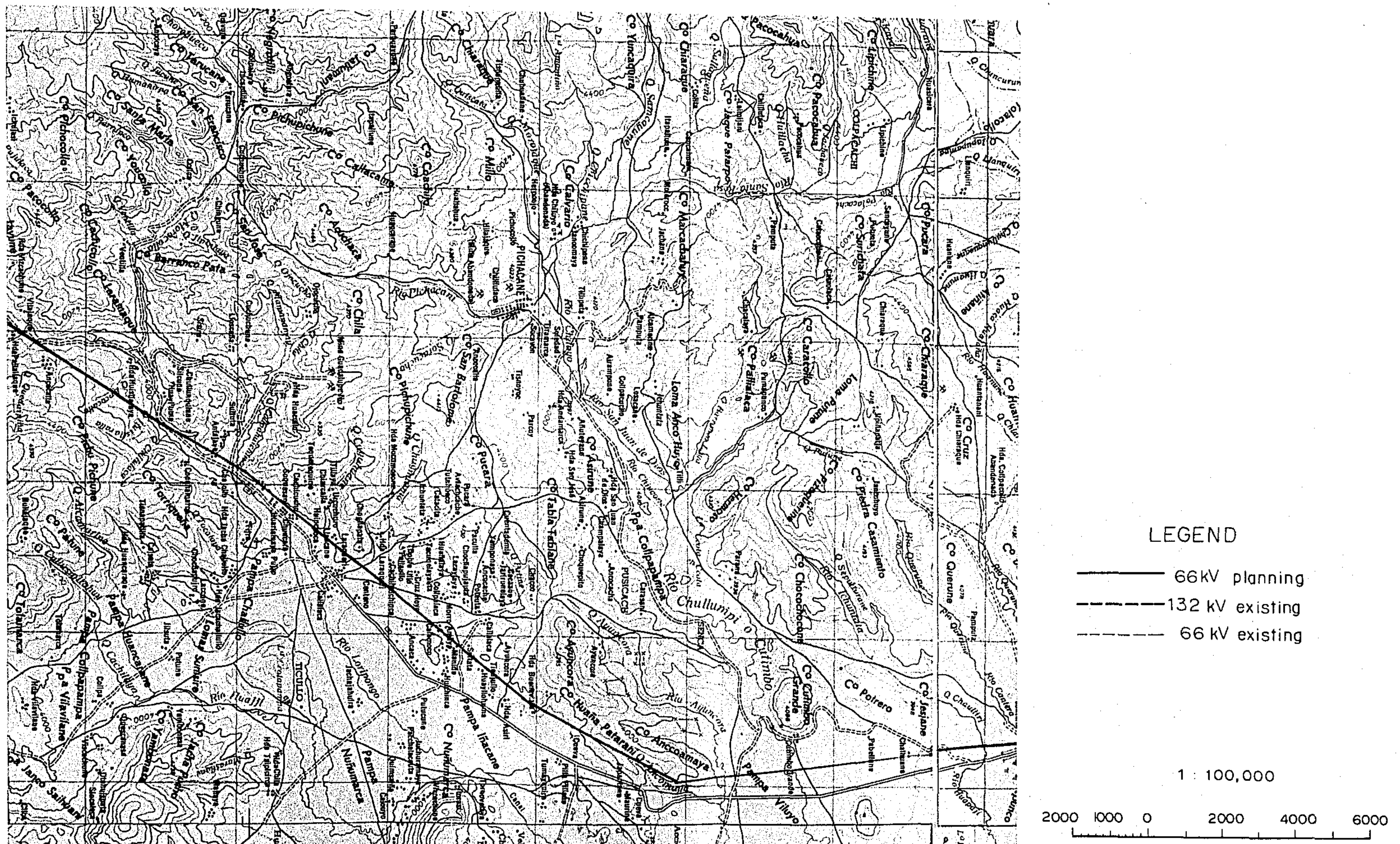

OVERSEAS TECHNICAL COOPERATION AGENCY, JAPAN

E P D C CONSULTANTS
ELECTRIC POWER DEVELOPMENT CO.
TOKYO JAPAN

MINISTERIO de FOMENTO y OBRAS PUBLICAS
REPUBLICA del PERU

PUNO ELECTRIFICACION PROGRAM

DRAWN
CHECKED
Ueda
SUBMITTED
T. Takeuchi
RECOMMENDED
K. Kameno
APPROVED
CHIEF ENGINEER EPDC
DATE

TRANSMISSION
PLAN MAP
ARICOTA No.1 P.S-JULIACA S.S

Fig. Ap- V-1-4

REVISION	DATE	DESCRIPTION	BY

電源開発株式会社
日本国 東京

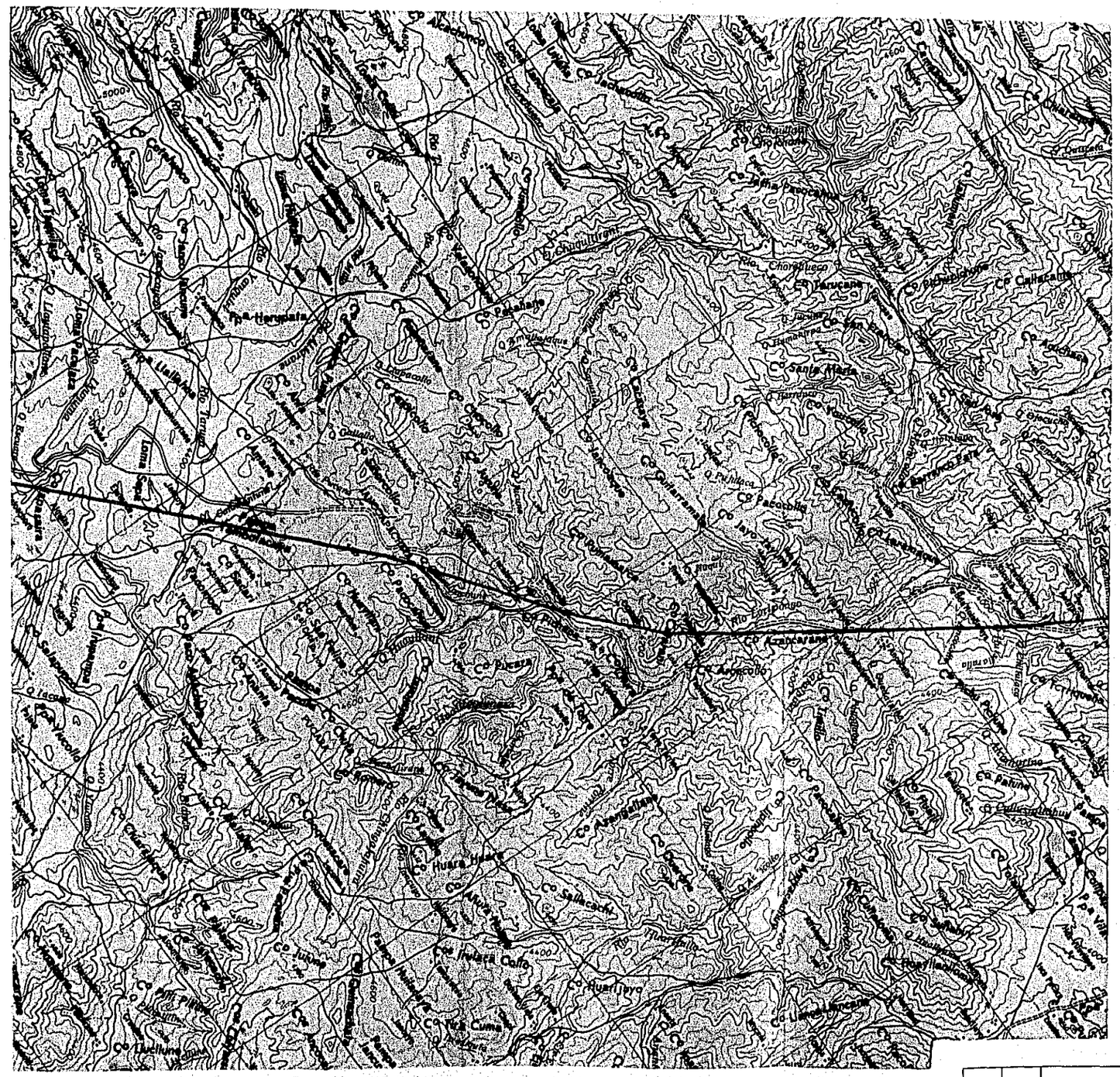

LEGEND

66kV planning

132 kV existing

66 kV existing

1 : 100,000

2000 1000 0 2000 4000 6000

OVERSEAS TECHNICAL COOPERATION AGENCY, JAPAN	
EPDC CONSULTANTS (ELECTRIC POWER DEVELOPMENT CO.) TOKYO JAPAN	MINISTERIO de FOMENTO y OBRAS PUBLICAS REPUBLICA del PERU
DRAWN:	PUNO ELECTRIFICACION PROGRAM
CHECKED:	TRANSMISSION PLAN MAP
SUBMITTED:	ARICOTA No.1 P.S.-JULIACA S.S
RECOMMENDED:	
APPROVED: CHIEF ENGINEER EPDC DATE:	Fig. Ap-V-1-5

REVISION	DATE	DESCRIPTION	BY

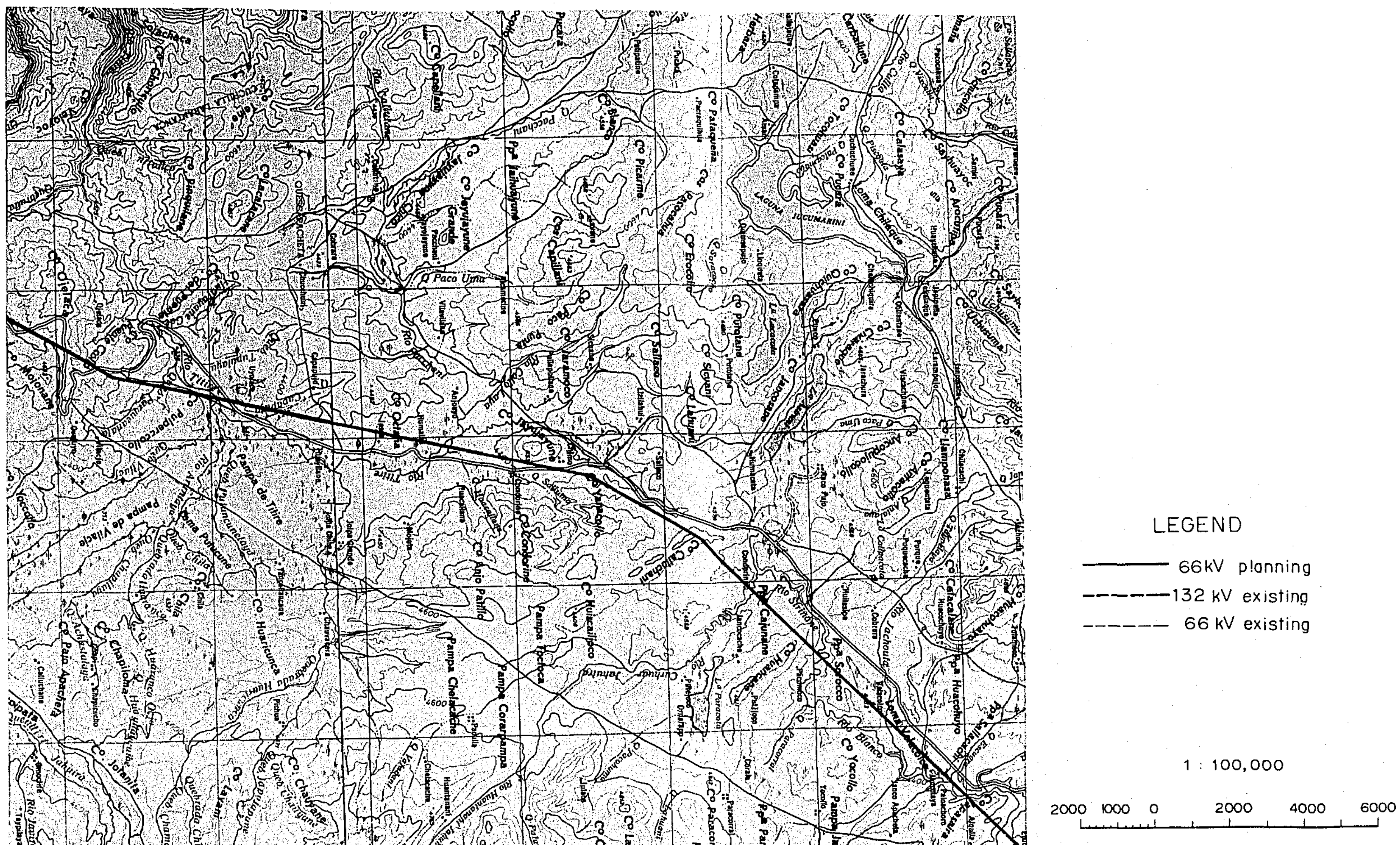

OVERSEAS TECHNICAL COOPERATION AGENCY, JAPAN	
EPDC CONSULTANTS (ELECTRIC POWER) TOKYO JAPAN	MINISTERIO de FOMENTO y OBRAS PUBLICAS REPUBLICA del PERU
DRAWN	PUNO ELECTRIFICACION PROGRAM
CHECKED	TRANSMISSION PLAN MAP ARICOTA No.1 P.S-JULIACA S.S
J. Takenouchi	
Kikawa	
APPROVED	Fig. Ap- V- 1- 6
CHIEF ENGINEER EPDC DATE	

REVISION	DATE	DESCRIPTION	BY

電源開発株式会社
日本国 東京

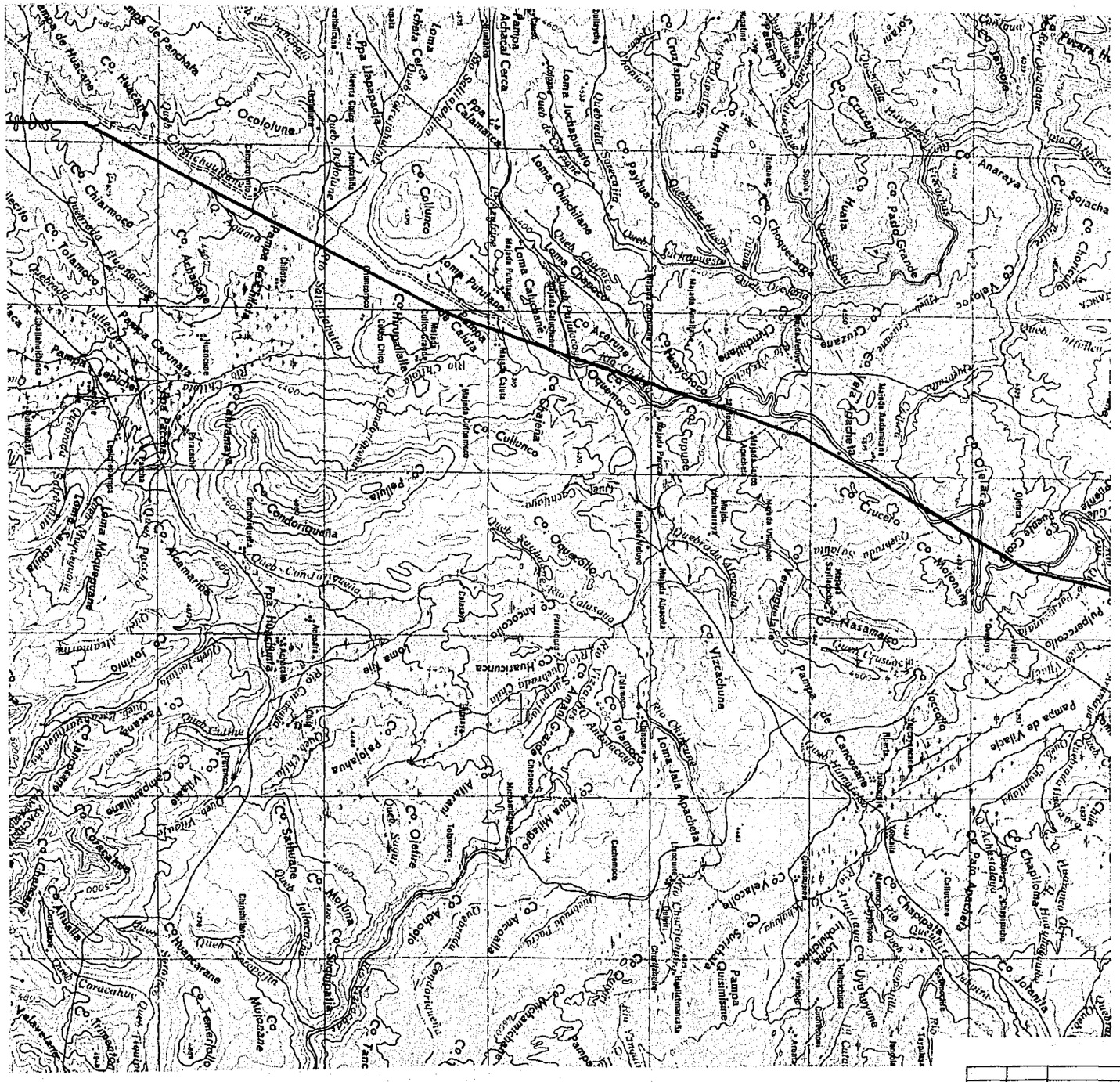

LEGEND

66kV planning

132 kV existing

66 kV existing

1 : 100,000

2000 1000 0 2000 4000 6000

OVERSEAS TECHNICAL COOPERATION AGENCY, JAPAN	
EPDC CONSULTANTS (ELECTRIC POWER DEVELOPMENT CO.) TOKYO JAPAN	MINISTERIO de FOMENTO y OBRAS PUBLICAS REPUBLICA del PERU
DRAWN:	PUNO ELECTRIFICACION PROGRAM
CHECKED:	TRANSMISSION PLAN MAP
SUBMITTED: J. Takanouchi	ARICOTA No.1 P.S.-JULIACA S.S
RECOMMENDED: K. Kanehe	
APPROVED: CHIEF ENGINEER EPDC DATE:	Fig. Ap-V-1-7

REVISION	DATE	DESCRIPTION	BY

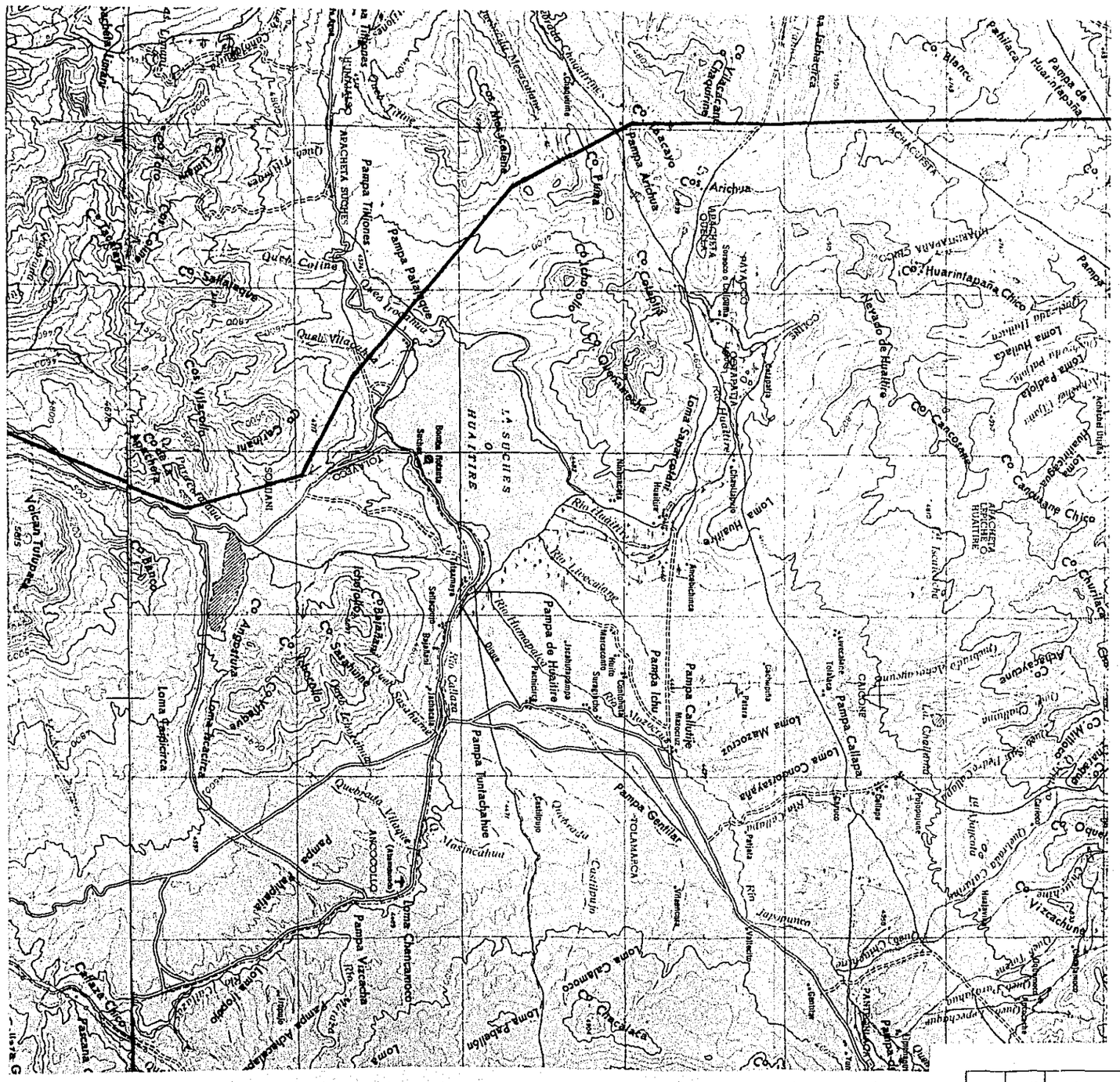

LEGEND

—— 66 kV planning

– – – 132 kV existing

- - - 66 kV existing

1 : 100,000

2000 1000 0 2000 4000 6000

REVISION	DATE	DESCRIPTION	BY

OVERSEAS TECHNICAL COOPERATION AGENCY, JAPAN

E P D C ONSULTANTS ELECTRIC POWER DEVELOPMENT TOKYO JAPAN

MINISTERIO de FOMENTO y OBRAS PUBLICAS
REPUBLICA del PERU

DRAWN

CHECKED

DESIGNED
J. Takenouchi

RECOMMENDED

APROVED

CHIEF ENGINEER EPDC
DATE

PUNO ELECTRIFICACION PROGRAM

TRANSMISSION
PLAN MAP
ARICOTA No.1 P.S-JULIACA S.S

Fig. Ap- Ⅴ-1-8

電源開発株式会社
日本国 東京

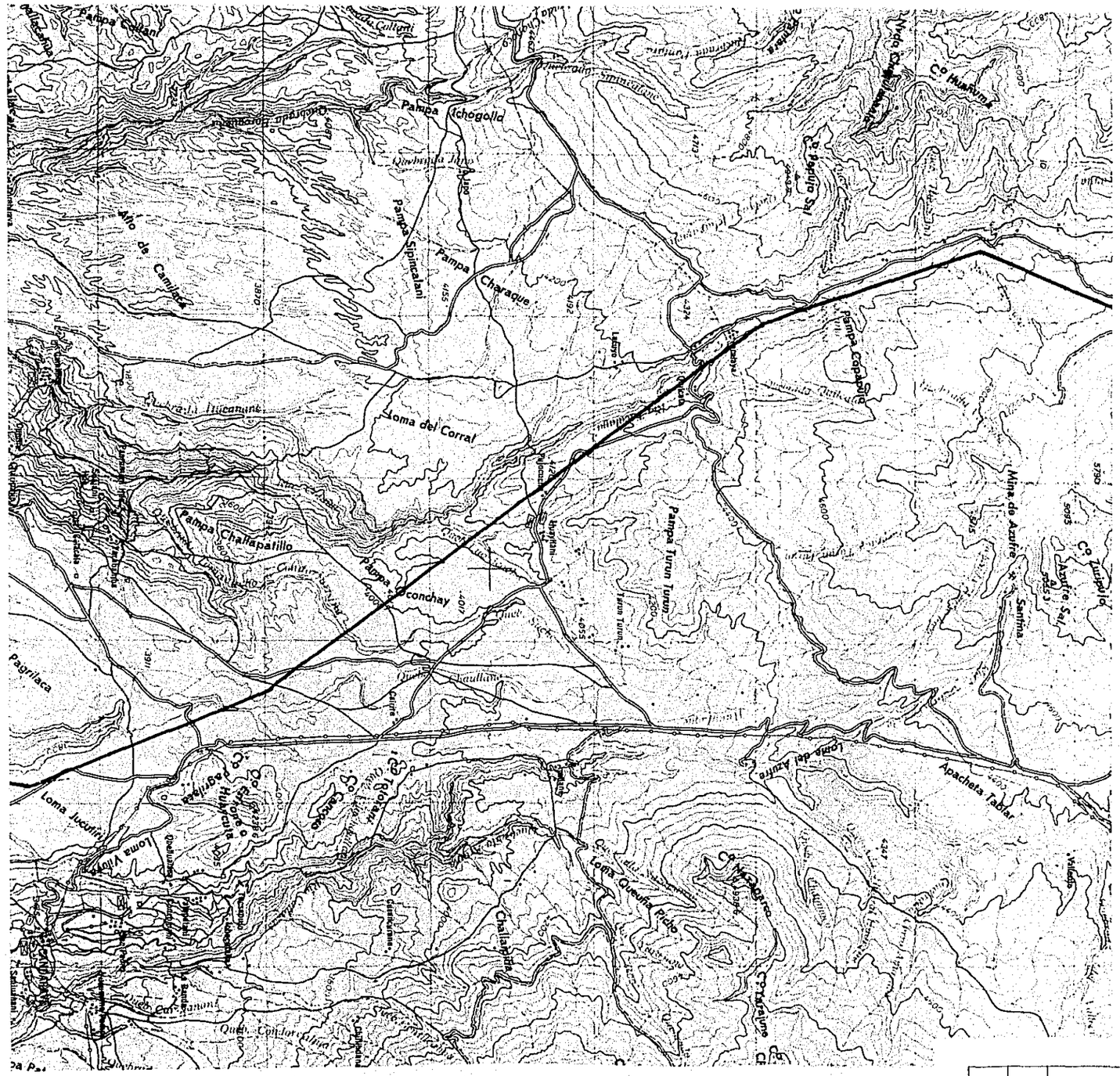

LEGEND

- 66kV planning
- 132 kV existing
- 66 kV existing

1 : 100,000

2000 1000 0 2000 4000 6000

OVERSEAS TECHNICAL COOPERATION AGENCY, JAPAN	
EPDC CONSULTANTS ELECTRIC POWER DEVELOPMENT CO., LTD.	MINISTERIO de FOMENTO y OBRAS PUBLICAS REPUBLICA del PERU
	PUNO ELECTRIFICACION PROGRAM
	TRANSMISSION PLAN MAP ARICOTA No.1 PS-JULIACA S.S
APPROVED	Fig. Ap- V-1-9

REVISION	DATE	DESCRIPTION	

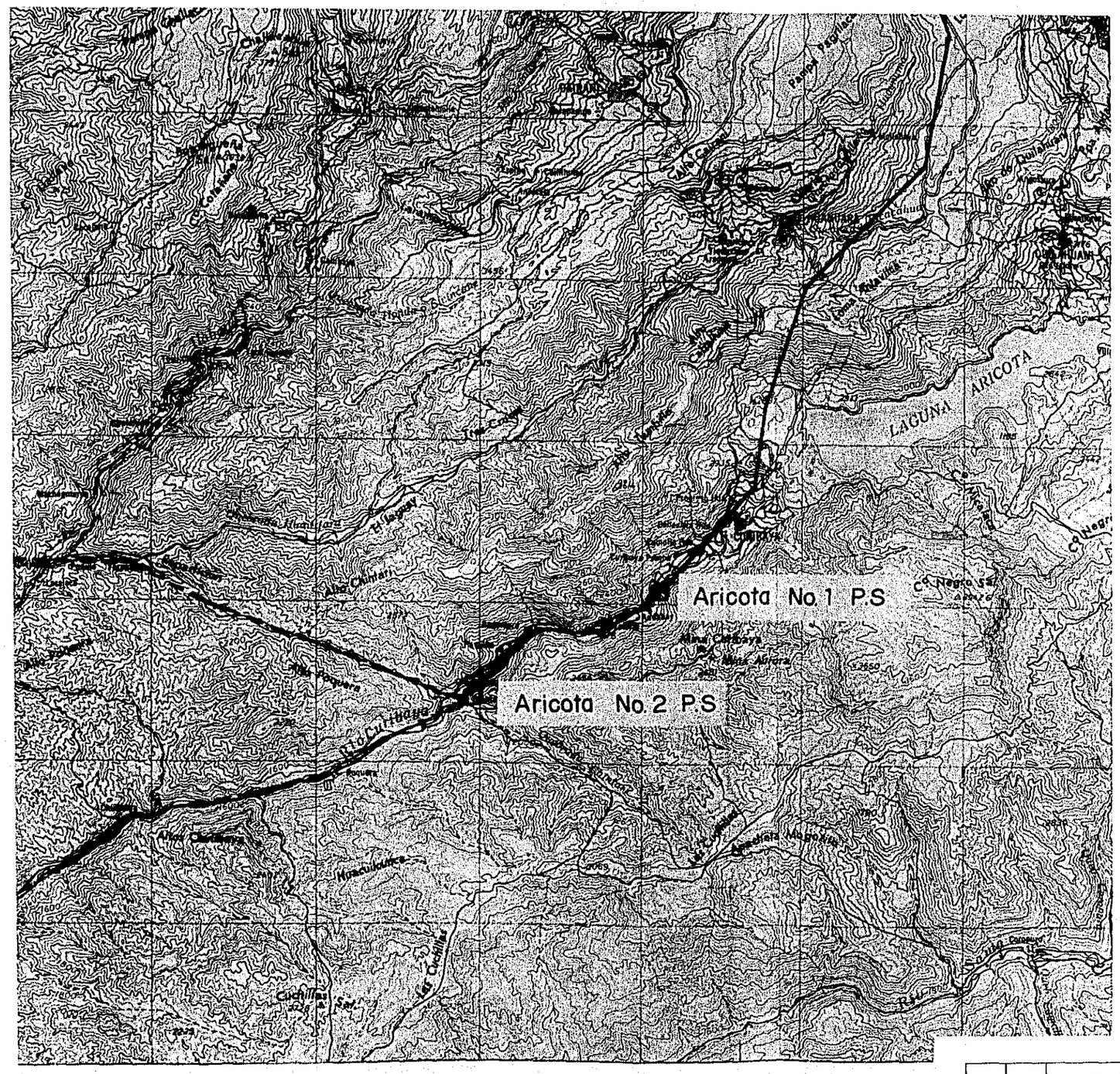

LEGEND

66kV planning

132 kV existing

66 kV existing

1 : 100,000

2000 1000 0 2000 4000 6000

OVERSEAS TECHNICAL COOPERATION AGENCY, JAPAN	
EPDC CONSULTANTS (ELECTRIC POWER DEVELOPMENT CO.) TOKYO	MINISTERIO de FOMENTO y OBRAS PUBLICAS REPUBLICA del PERU
	PUNO ELECTRIFICACION PROGRAM
	TRANSMISSION PLAN MAP ARICOTA No.1 P.S-JULIACA S.S
	Fig. Ap- V-1-10

REVISION	DATE	DESCRIPTION	No.

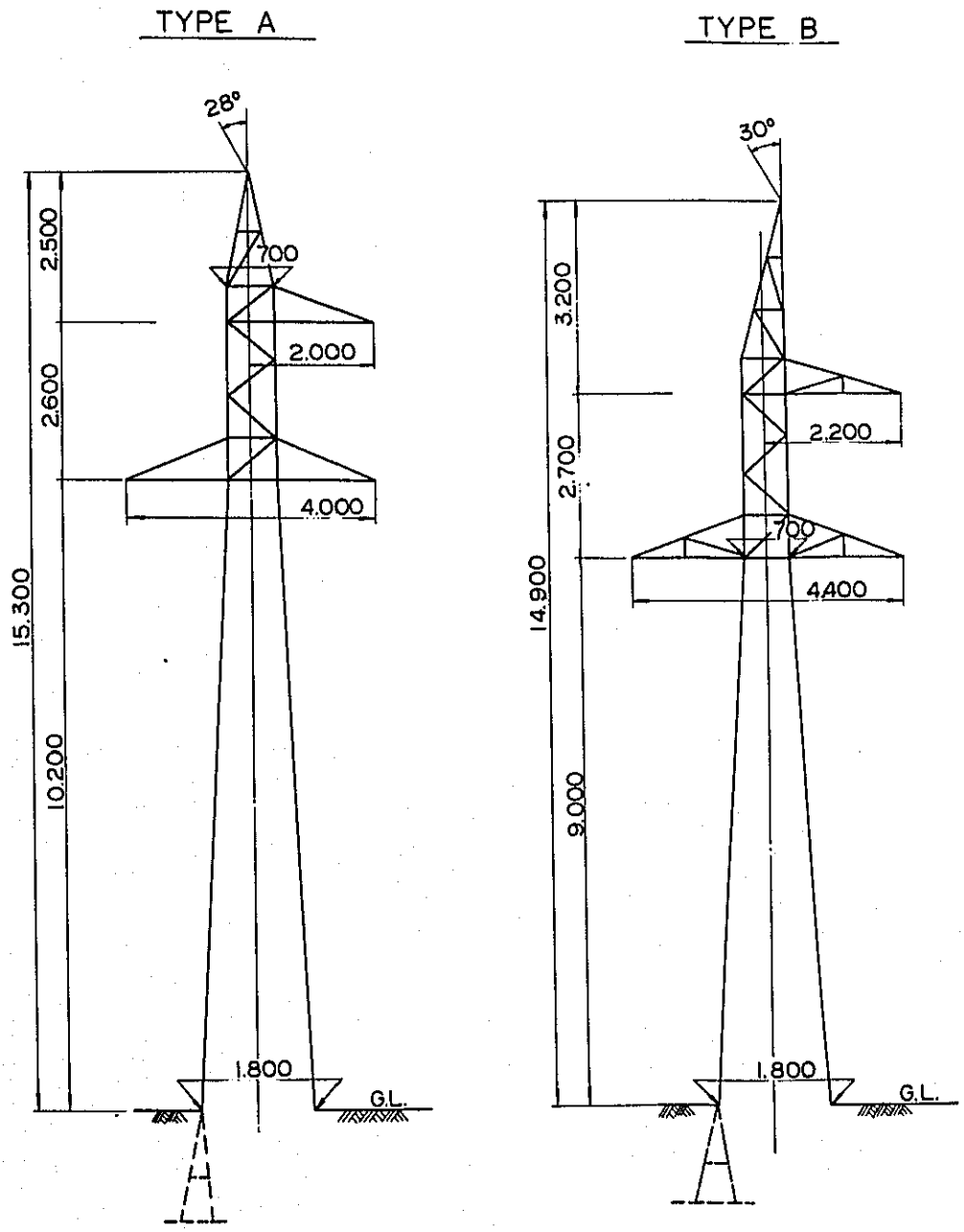

OVERSEAS TECHNICAL COOPERATION AGENCY, JAPAN

EPOC CONSULTANTS (ELECTRIC POWER DEVELOPMENT CO) TOKYO JAPAN

MINISTERIO de FOMENTO y OBRAS PUBLICAS REPUBLICA del PERU

DRAWN: CHECKED: SUBMITTED: RECOMMENDED: APPROVED: CHIEF ENGINEER, EPOC DATE:

PUNO ELECTRIFICACION PROGRAM

TRANSMISSION STEEL TOWER

Fig. Ap V—3—1

REVISION	DATE	DESCRIPTION	BY

(A—4)

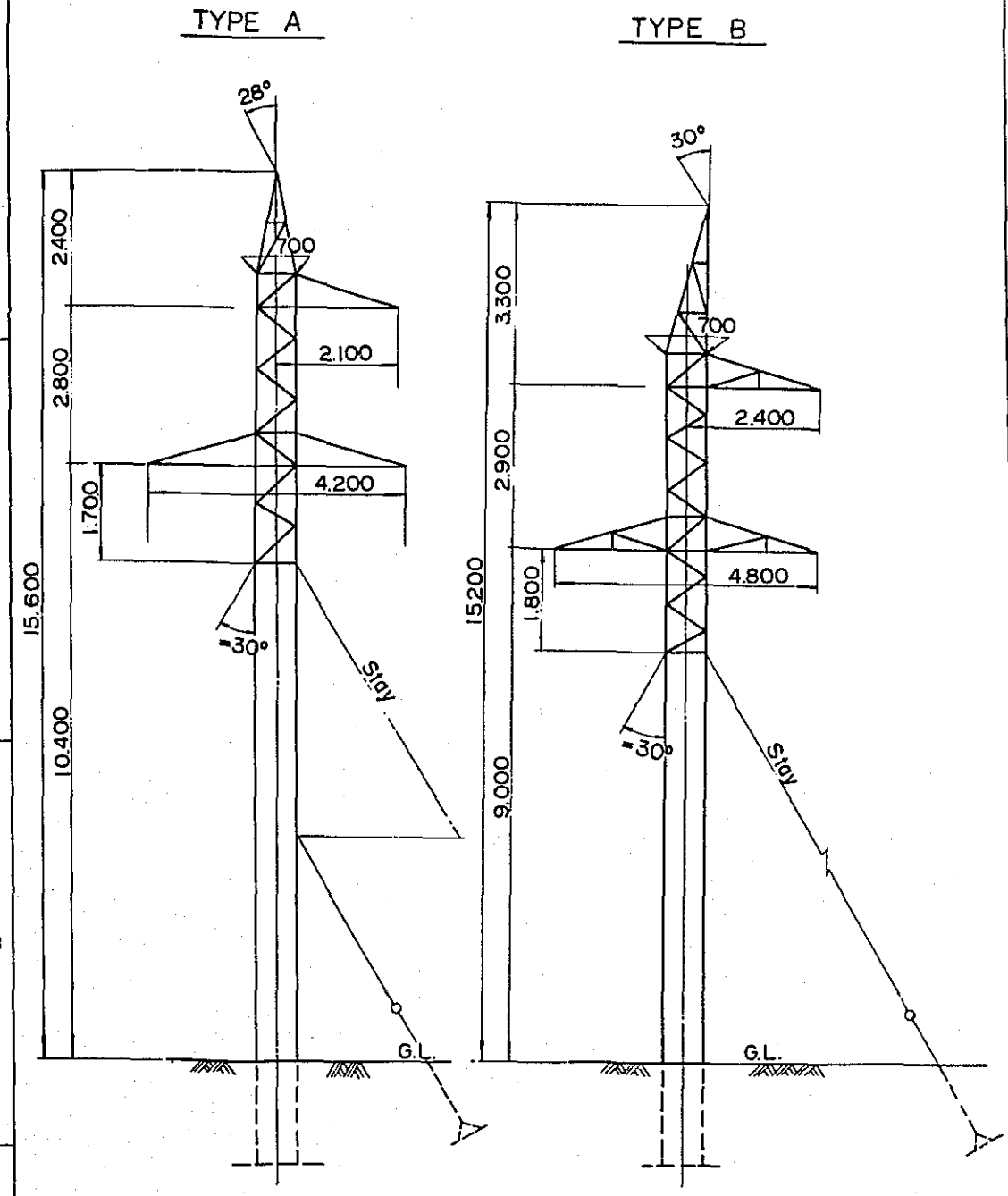

OVERSEAS TECHNICAL COOPERATION AGENCY, JAPAN

E.P.D.C. CONSULTANTS (ELECTRIC POWER DEVELOPMENT CO.) TOKYO JAPAN

MINISTERIO de FOMENTO y OBRAS PUBLICAS REPUBLICA del PERU

PUNO ELECTRIFICACION PROGRAM

TRANSMISSION STEEL POST

Fig. Ap V– 3 – 2

REVISION	DATE	DESCRIPTION	BY

(A – 4)

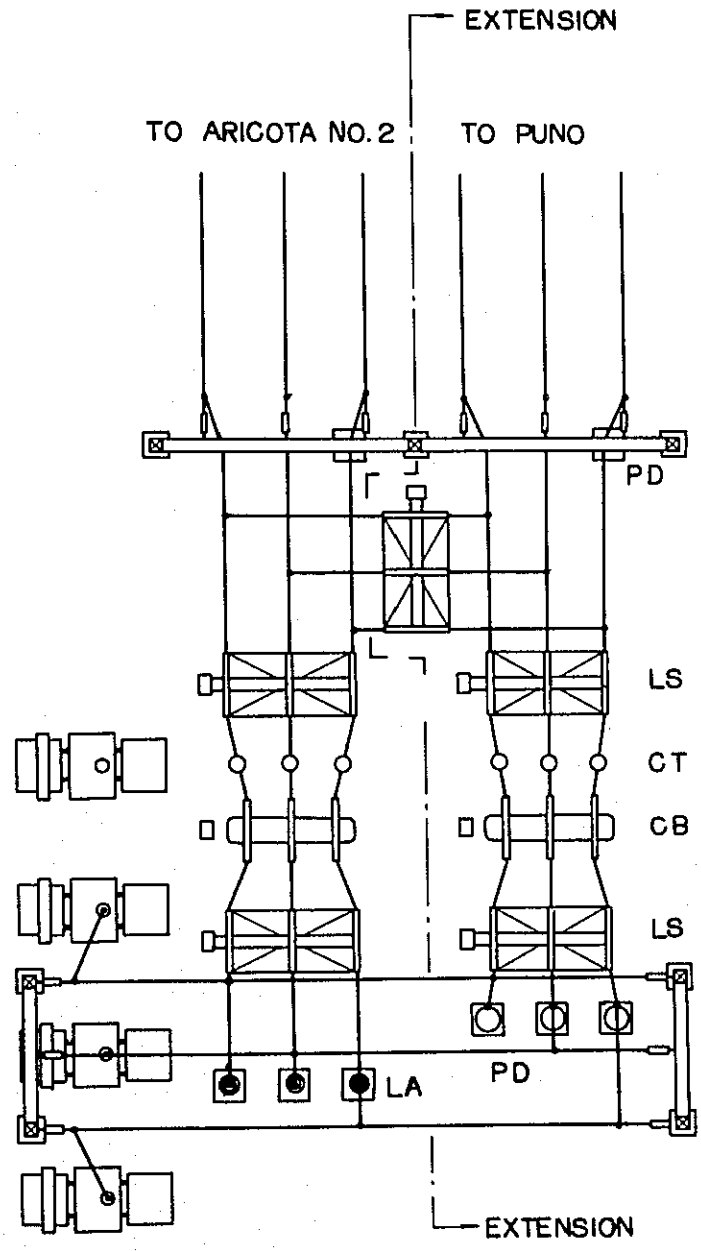

OVERSEAS TECHNICAL COOPERATION AGENCY, JAPAN	
E.P.D.C CONSULTANTS (ELECTRIC POWER DEVELOPMENT CO.) TOKYO JAPAN	MINISTERIO de FOMENTO y OBRAS PUBLICAS REPUBLICA del PERU
DRAWN: M. Sato	PUNO ELECTRIFICACION PROGRAM
CHECKED: M. Hirano	ARICOTA No.1 P.S
ENGINEER: M. Ogata	ARRANGEMENT OF
ENGINEER: T. Kato	EXTENTION EQUIPMENT
APPROVED: T. Ogata	Fig. Ap V-4-1

REVISION	DATE	DESCRIPTION	BY

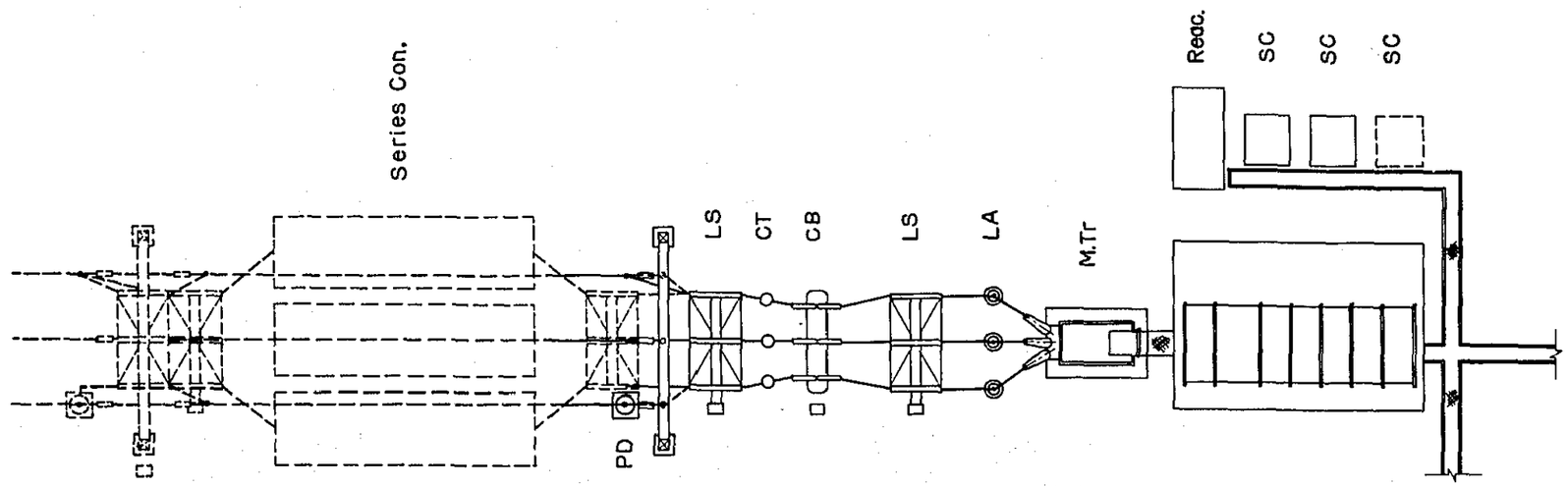

REVISION	DATE	DISCRIPTION	BY

OVERSEAS TECHNICAL COOPERATION AGENCY, JAPAN

ELECTRIC POWER DEVELOPMENT CO. (CONSULTING ENGINEERS) TOKYO, JAPAN

MINISTERIO de FOMENTO y OBRAS PUBLICAS
REPUBLICA del PERU

PUNO ELECTRIFICACION PROGRAM

PUNO S.S
ARRANGEMENT OF EQUIPMENT

Fig. Ap V– 4 – 2

(A-3)

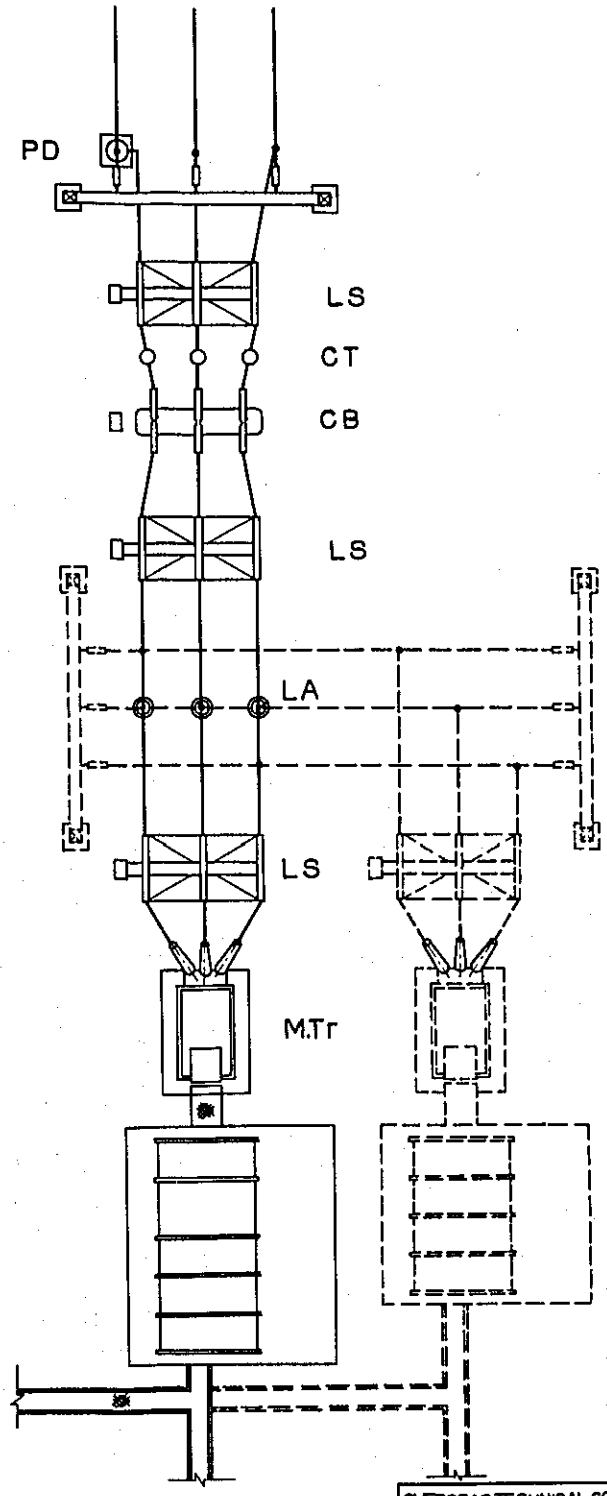

OVERSEAS TECHNICAL COOPERATION AGENCY, JAPAN

E.P.D.C. CONSULTANTS (ELECTRIC POWER DEVELOPMENT CO.) TOKYO JAPAN

MINISTERIO de FOMENTO y OBRAS PUBLICAS REPUBLICA del PERU

DRAWN: M. Saito

CHECKED: M. Hisano

SUBMITTED:

RECOMMENDED: T. Kato

APPROVED: I. Asao

CHIEF ENGINEER, EPDC

DATE:

PUNO ELECTRIFICACION PROGRAM

CARACOTO S.S

ARRANGEMENT OF EQUIPMENT

Fig. Ap V-4-3

REVISION	DATE	DESCRIPTION	BY

電源開発株式会社 日本国 東京

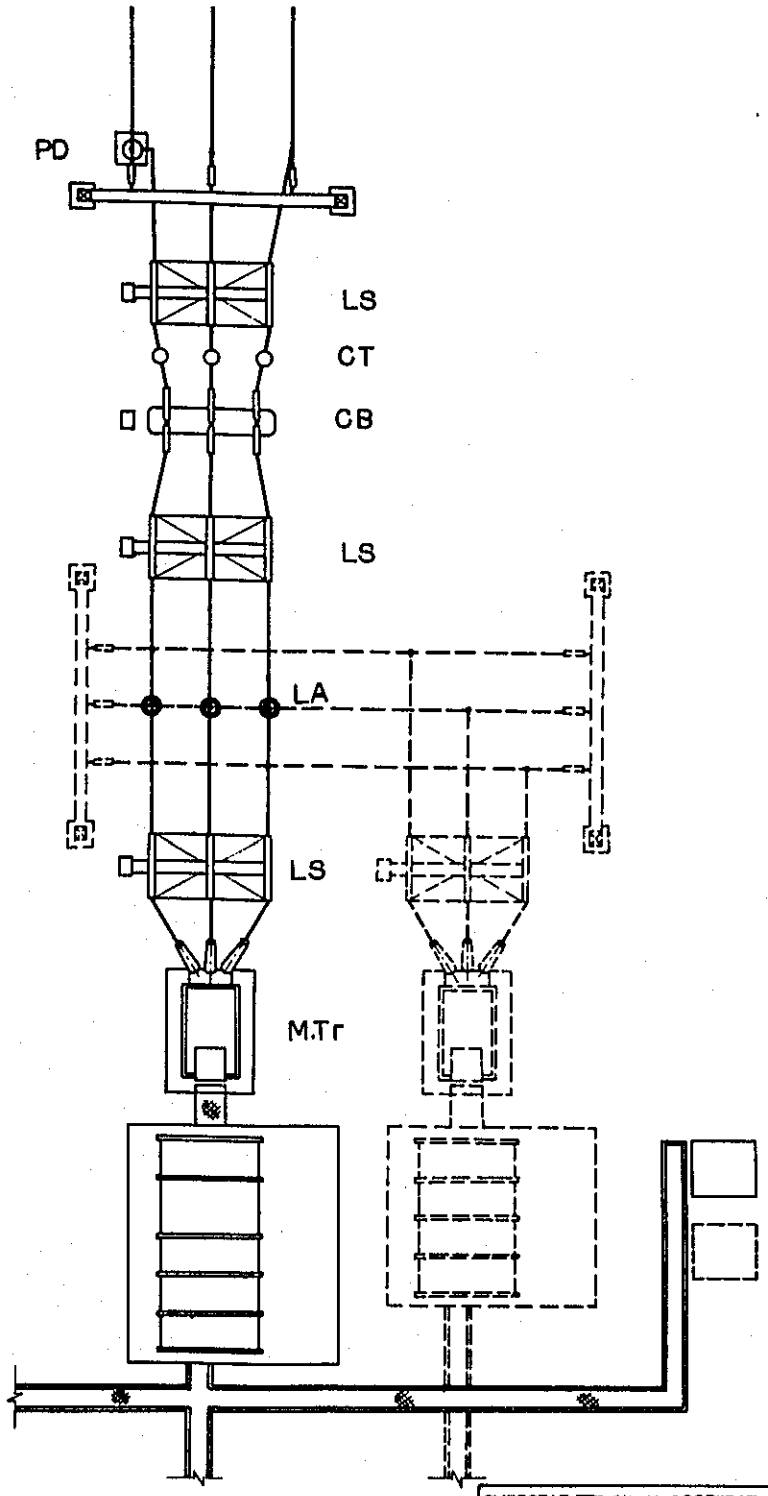

OVERSEAS TECHNICAL COOPERATION AGENCY, JAPAN

MINISTERIO de FOMENT y OBRAS PUBLICAS
REPUBLICA del PERU

PUNO ELECTRIFICACION PROGRAM

JULIACA S.S

ARRANGEMENT OF EQUIPMENT

Fig. Ap V-4-4

REVISION	DATE	DESCRIPTION	BY

(A-4)

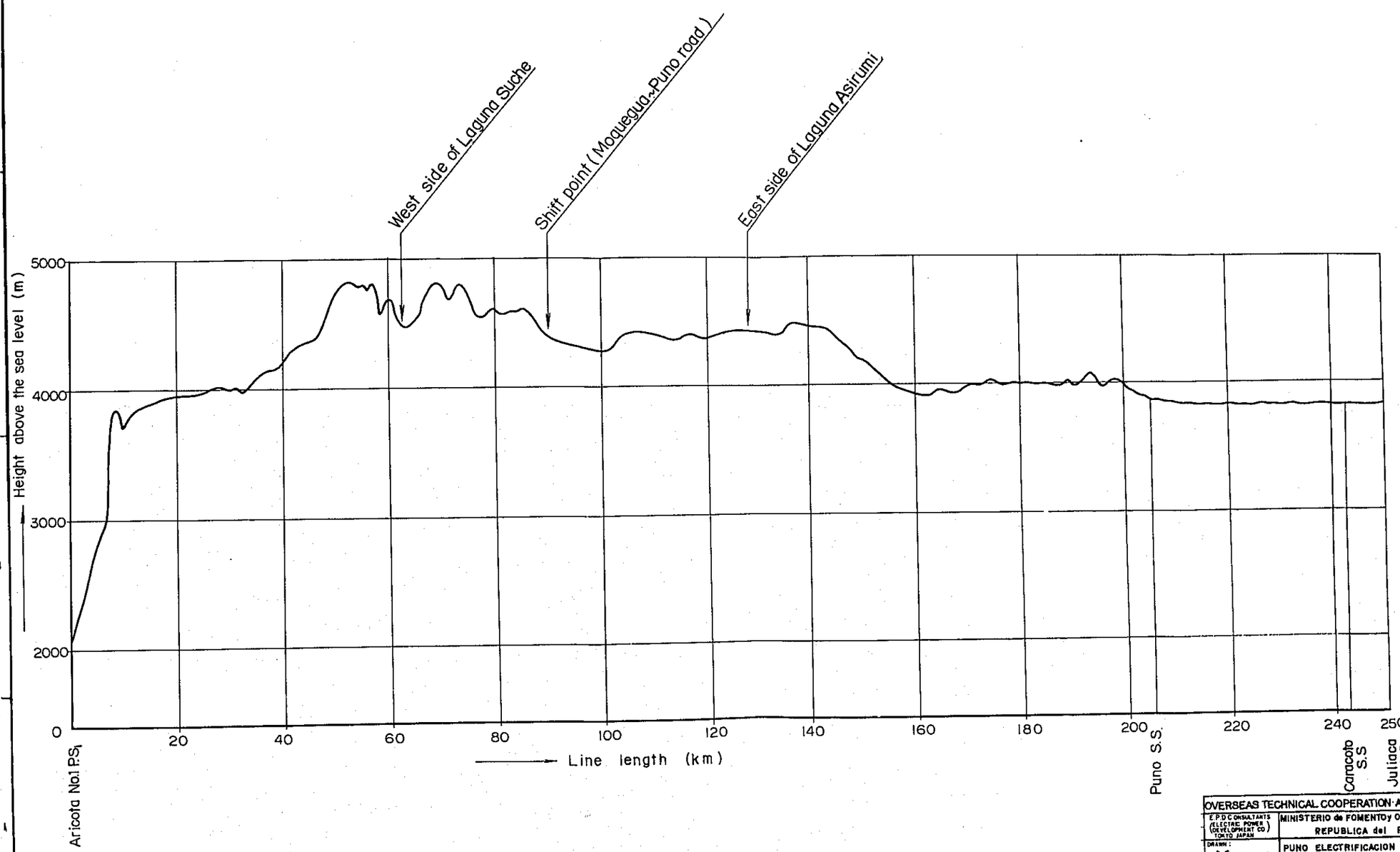

OVERSEAS TECHNICAL COOPERATION AGENCY, JAPAN	
E.P.D.C CONSULTANTS (ELECTRIC POWER DEVELOPMENT CO.) TOKYO JAPAN	MINISTERIO de FOMENTO y OBRAS PUBLICAS REPUBLICA del PERU
DRAWN: CHECKED: SUBMITTED: RECOMMENDED: APROVED: CHIEF ENGINEER, EPDC DATE:	PUNO ELECTRIFICACION PROGRAM PROFILE OF TRANSMISSION LINE ROUTE
REVISION / DATE / DESCRIPTION / BY	Fig. Ap V– 2 – 1

(A–3)

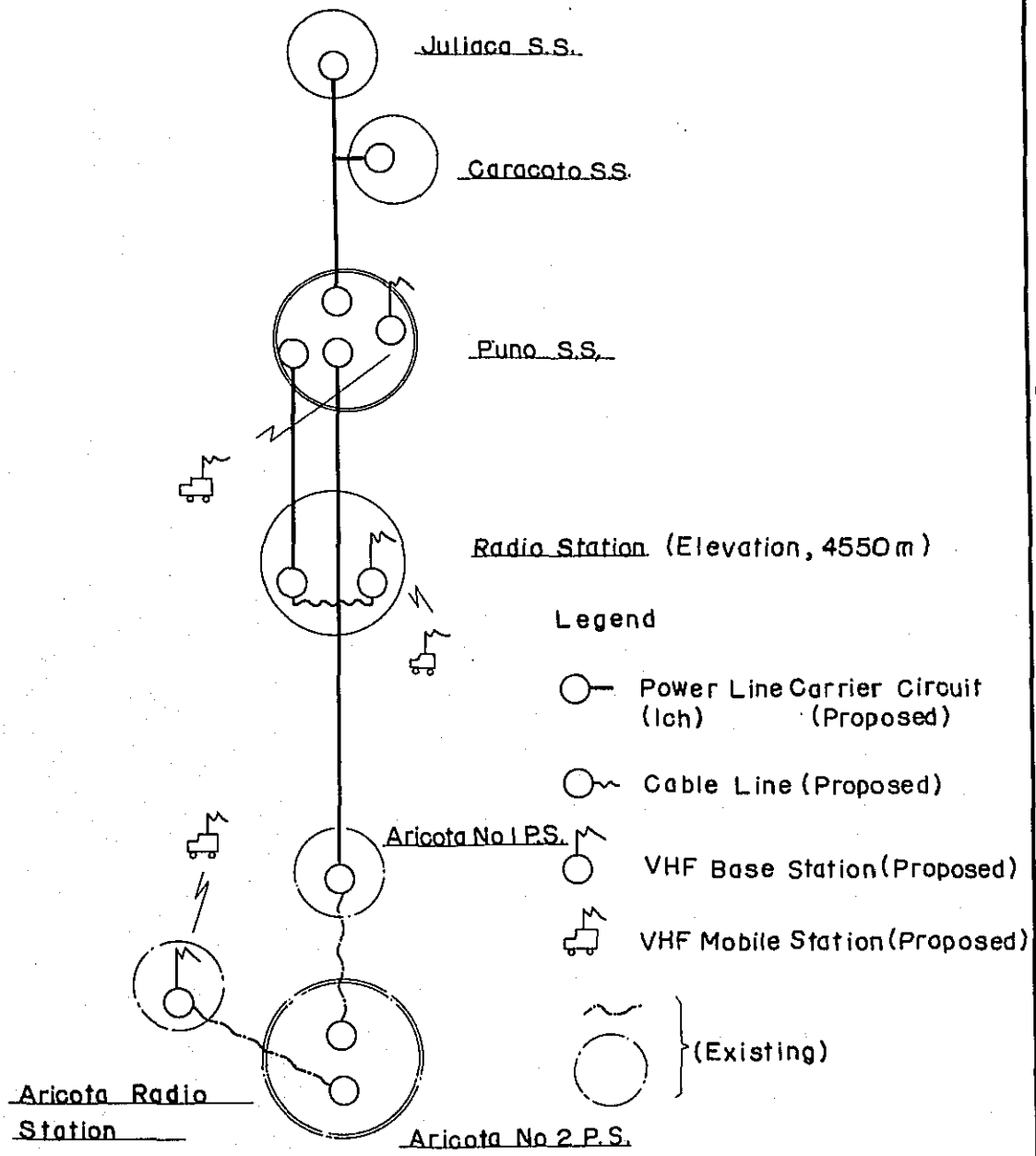

OVERSEAS TECHNICAL COOPERATION AGENCY, JAPAN	
ELECTRIC POWER DEVELOPMENT CO. (EMA CONSULTONS) TOKIO, JAPAN	MINISTERIO de FOMENTO y OBRAS PUBLICAS REPUBLICA del PERU
DIBUJADO: H. Fuyuki REVISADO:	PUNO ELECTRIFICACION PROGRAM
CONSULTADO: H. Oho RECOMENDADO: M. Ueda	TELECOMUNICATION SYSTEM DIAGRAM
APROBADO: I. Ikeda EPDC PECOM.	Fig. Ap V– 5 – 1

(A-4)