No. 10

FINAL REPORT
FOR THE ESTABLISHMENT OF
THE REFUGEE PROCESSING CENTER ON TARA ISLAND
IN THE REPUBLIC OF THE PHILIPPINES

January 1980

JAPANESE MISSION FOR THE TARA ISLAND
REFUGEE PROCESSING CENTER PROJECT
IN THE REPUBLIC OF THE PHILIPPINES

JAPAN INTERNATIONAL COOPERATION AGENCY

SDS
80-23

No.

FINAL REPORT
FOR THE ESTABLISHMENT OF
THE REFUGEE PROCESSING CENTER ON TARA ISLAND
IN THE REPUBLIC OF THE PHILIPPINES

JICA LIBRARY
1031467[2]

January 1980

JAPANESE MISSION FOR THE TARA ISLAND
REFUGEE PROCESSING CENTER PROJECT
IN THE REPUBLIC OF THE PHILIPPINES

JAPAN INTERNATIONAL COOPERATION AGENCY

S.D.S
CR(3)
80-23

国際協力事業団
受入月日 '84. 9. 26
登録No. 9157
118
21.6
SDS

5 October 1979

Dear Mr. Paeffgen:

As you are aware the Japanese experts joined the UNHCR Mission for the establishment of a Rufugee Processing Center on Tara Island from 1 to 8 July 1979. Field trip was made to Tara Island accompanied by the Philippine Government counterparts and subsequently a summary of resumed informal meeting was prepared.

Basing of the summary, the supplemental report was prepared by the Philippine Government agencies concerned and it was forwarded to us through UNHCR Manila for inclusion in our final report.

It was noted, however, the supplemental report comprised individual and separate reports prepared by the atencies concerned on some of the major subject matters as indicated in the summary of the meeting, and therefore it does not give clear overall picture of the proposed RPC. And further in the absence of studies on energy supply, telecommunications, flow chart for movement of people, food and supplies, etc. to be prepared by UNHCR as referred to the agenda attached to the Summary of the meeting, we find it rather difficult to make overall and conclusive comments and suggestions. Nevertheless, in light of urgency of the project and assuming that final decision is being taken for establishing RPC on Tara Island, we have herewith attached final report (not in official manner) indicating our views and comments as a reference material for your undertaking additional studies.

It has been our great pleasure to have participated in the study under the guidance of UNHCR and with well-organized assistance of the Philippine government agencies concerned. Please accept our willingness and readiness to further assist UNHCR and/or Philippine government if so requested for the establishment of RPC in the Philippines.

We sincerely hope that the attached paper would be of some assistance to you and wishing you a success in early completion of the project.

Kazuaki Suma
Leader, Japanese Mission

Mr. Manfred Paeffgen
Representative a.i. in the Philippines
Room 511, 5th Floor
NEDA at Makati Bldg.
106, Amorsolo Street
Legaspi Village, Makati
Metro Manila
the Philippines

CONTENTS

1. Introduction 1

2. Comments on Additional Data 2

1) General Lay-out of the R.P.C. 2

2) Improvement of Physical Infrastructure of the Island 4

3) Construction of the R.P.C. 6

4) Water Supply and Sanitation 7

5) Public Health 9

6) Budget 10

APPENDIX: I. Report on the Establishment of a Refugee Processing Center in the Republic of the Philippines. 13

II. Additional Data Prepared by Government Agencies Concerned. 33

1. Introduction

Japanese expert team joined the UNHCR Survey Mission for the establishment of R.P.C. on Tara Island in the Republic of the Philippines from 1 to 8 July 1979. During its stay in the Philippines a field trip was made to the project site. Subsequently informal meetings were held on 6 and 7 July basing on which a Summary of resumed meeting was prepared.

Just before leaving Manila on 8 July, we submitted the report indicating our field assessment and comments for further studies to be undertaken.

In accordance with the Agenda as set out below, our report covered items marked *, while others were to be prepared by UNHCR.

AGENDA:

* 1. General Lay-out of the R.P.C.
* 2. Improvement of the physical infrastructure of the island
* 3. Construction of the R.P.C.
* 4. Water supply and sanitation.
5. Energy supply
6. Transportation facilities
7. Telecommunication
* 8. Public health
9. Flow chart for movement of people, food and supplies
10. Administration of R.P.C.
* 11. Budget
12. Time table

Subsequently the following additional data was forwarded to the Japanese team from the Philippine Government through UNHCR Manila.

1. Preliminary Budget Cost Estimate ---------- Annex (A)
   - Road plan - Scheme I
2. Preliminary Budget Cost Estimate ---------- Annex (B)
   - Road plan - Scheme II
3. Access Road to the Community Center ---------- Annex (C)
4. Rehabilitation and Improvement of Air Strip ---------- Annex (D)
5. Pier and Beaching Area ---------- Annex (E)
6. Flood Control and Drainage System ---------- Annex (F)

7. Infrastructures Requirement for Health services ---------- Annex (G)
for 7,000 refugees

8. General Lay-out of Physical Plants and Other ---------- Annex (H)
Facilities of R.P.C. Project

These additional data do not fully correspond and respond to the comments made by the Japanese team, and therefore final conclusion on the technical feasibility of the R.P.C. on Tara Island could hardly be established. Described below are some major comments which are considered essential for completion of the Project.

2. Comments on Additional Data

1) General lay-out of the R.P.C.
(Additional Data Annex (H)): General Lay-out of Physical Plants and Other Facilities of R.P.C. Project).

We had previously pointed out the following on the General Lay-out.

(1) Existing Lagoons are the major drainage system of the site and it's utilization should be considered not only from drainage but also from sanitation point of view as well.

(2) Site area

The proposed site is composed of Lagoons drainage channel and air strip which should be excluded from land utilization and therefore, expansion of site area to the adjacent hilly area would have to be taken into consideration.

The revised General Lay-out Plan appears to have based on our above-mentioned comments, however, further comments on the plan are described as follows.

a) The RPC site are expanded by 35 meters to the south adding approximately 1.7 hectares of land to the project site.

b) Existing lagoons are planned to be preserved and utilized for drainage purpose and earth works for reclamation of the lagoon are now not necessary.

c) Refugee residential building lay-out was revised to meet the standard suggested in the Japanese Mission Report.

However, for more efficient establishment of the RPC facilities, following further studies and modifications are to be made before proceeding to detailed planning and designing.

I) Landuse and population density

Following table shows the breakdown of land utilization of the revised site development plan:

Refugee Housing Area	10.3 ha.
Athletic Field	2.2
Administration Area	3.7
Air strip and Proximity	4.2
Communication Facilities (Yawao Point Locks)	0.6
Lagoons and Swampy Area	4.1
Total Site Area:	25.1 ha.

Considering the refugee population to be accommodated at one point of time is about 7,000 persons, a gross population density would be 345 persons per hectare which is fairely close to the guidline suggested in the Japanese Misssion Report, however, when net density of the residential area is taken into account, it would represent 680 persons per hectare which is considered rather high.

Generally speaking, in preparing site lay-out plan of residential area of temporary nature, a design of storm drainage system is the most important factor and a choice of a system and site lay-out plan based on the selected drainage system will have considerable affect on the cost of site preparation. From this view point, a plan to utilize existing drainage system to the maximum extent is an appropreate design approach to minimize construction cost and time required therefor.

Residential building area of the plan which represent net density of 680 persons per hectare appears to be rather tight to apply above-mentioned design principle, and 500 persons per hectares will be an optimum figure.

In this respect, it is suggested to make further modifications of the lay-out plan in terms of landuse, internal road network, and building lay-out as follows:

a) Proposed athletic field can be converted to the residential use so as to expand residential land and to give a mergine for more flexible building lay-out design. Recreational field can be moved to the east side of the air strip.

b) Internal peripheral roads to the lagoon can be re-layouted to the outer location to avoid or minimize bridge construction, embankment works, and road crossing drainage structures.

c) Buildings along proposed airstrip should be set backwards to have buffer open space belt for safety reasons.

II) Athletic field

An athletic field with basket-ball courts, volleyball courts, tennis courts and other facilities is proposed in Philippines Technical Report. Japanese Team has noted through several visits to the national refugee camps in Indonesia that for recreational activities a provision of plain multi-purpose field with minor leveling works would be satisfactory.

Also a provision of several number of pocket corner open space conveniently located near residential areas will be useful and for their community life.

III) Recreational use of lagoons

Considering temporaly nature of the facilities, the Japanese Team is of the view that it is difficult to prepare infrastructure facilities to maintain the lagoon water always at satisfactory sanitary conditions for recreational use within the limited budget and short construction period.

It is, therefore, suggested that use of lagoon water should be limited to particular use like boating and such similar activities as swimming bathing and other activities should be kept under strict control.

2) Improvement of physical infrastructure of the island

Additional data: Annex (E) Pier and Beaching Area
Annex (A) Road plan --- Scheme I
Annex (B) Road plan --- Scheme II
Annex (C) Access Road to Community
Annex (D) Rehabilitation and Improvement of Air Strip

Annex (F) Flood Control and Drainage System

(1) Pier/Jetty

Pier/Jetty should be designed based on estimated tonnage of the transport boat. The additional data is silent on this important issue. As mentioned earlier, the following major items are to be further considered.

1. Seawater depth along the bay,
2. Soil condition of the sea bottom,
3. Estimated tonnage of the boat, and
4. Kinds of structure

In case of RPC in Indonesia on Garang Island, pier has been designed to be constructed by wooden structure, information and data to support a proposed reinforced concrete structure will be required to justify the design.

(2) Road plan

There are two alternatives of access road plan, concrete pavement with 6.1 m width and gravel road with 7.0 m width.
Comments on these plans are as follows:

a) Access Road from pier site, its alignment is designed through rocky hillside. Since the access road planning is closely related to the location of the pier site, consideration should be given on this point.

b) Design standard including bill of materials will be determined considering such item as expected traffic volume and duration of utilization. In the case of Garang Island in Indonesia, access road has been designed at class C (width is 600 m) with tarford pavement which is the Indonesian standard of road design.

c) The alignment of roads within RPC should be further considered as described in item 1) and be revised thereafter based on the lay-out.

d) Access Road to Community Center as described in annex (c) is not clear to warrant specific comments.

(3) Rehabilitation and improvement of air strip

It shoud be decided from logical point of view whether an air

strip is basically necessary. Further, the necessity of hangar should be assessed in compliance with possible extension of an air strip which is to be determined according to the model of aircraft and number of planes.

(4) Flood control and drainage system

With regard to the disposal from lagoon, the problems of flood control and drainage in rainy season and the use of drainage and lagoon in dry season should be reviewed.

On the problem of drainage, it is possible to control intrusion of salt water at the planned check gate, but as the elimination of inland water is related to the level of tide, it is not certain whether inland water could spontaneously be drained away.

This check gate is considered to be mainly used for controlling the incursion of salt water in dry season, however, it seems to be far expensive for that purpose alone.

3) Construction of the RPC

Back up data of building/facilities list is as follows:

- Guest House
- Administrative Building
- Administrative Quarters
- Mess Hall/Canteen
- Staff House (Married)
- Staff House (Single)
- Work Shop/Garage
- Air-craft Hanger
- Security Barracks
- Signal Tower
- Multi-Purpose Building
- Dental Dispensary
- Refugee Housing
- Communal Toilet & Bath
- Communal Kitchen & Washing Shed

- Athletic Area & Facilities (Basketball, volleyball, tennis court and other facilities)
- Security Fence
- Mess Hall and Galley

The following are some of our comments:

(1) Building/facilities which need be studied further.

- Aircraft Hanger:

  Airplanes are not expected to stay there for a long time. It is doubtful whether aircraft hanger is necessary.

- Dental Dispensary:

  Not only dental but general dispensary is necessary.

- Athletic area and facilities:

  Several kinds of facilities are not considered necessary. Only wide-open field will be sufficient.

- Security Fence:

  Necessity of security fence needs to be studied further taking into consideration administration and control schemes.

(2) Building/facilities which are considered necessary but not included in the additional data are as following:

- Store House
- Guard Posts

4) Water supply and sanitation

The Japanese Mission made several comments and suggestions on water resources for RPG. However, progress and results of such study on availability and quality of fresh water are still awaited. Unless the availability of fresh water is ascertained, technical comments cannot be given. It is strangly recommended that such stay be urgently undertaken.

Quality of water sampled on the Tara Island by the Japanese Mission in July has been assessed and analyzed in Japan, the results of which are shown in the following pages.

Water Quality Analysis

Water existing on Tara Island was sampled at two locations for water quality analysis. The sampled water was analysed at the Central Laboratory of Nihon Suido Consultants Co., Ltd. in Tokyo.

Followings are the test results and some comments on the water quality.

Location	Proposed RPC site	Central area of the island
Taken from:	Shallow well equipped with hand pump	Natural spring
Use	Source proposed for RPC's miscellaneous water use	Presently used by inhabitants
Date and time sampled	July 4, 1979 8:15 a.m.	July 4, 1979 10:00 a.m.
Weather of the day	Rain	Rain
Atomosphere temperature (*)	25.5°C	25.8°C
Water temperature (*)	28.5°C	28.7°C
Appearance (*)	Clear	Turbid in white-gray
Taste (*)	Not salty	Salty
pH	7.4	5.5
Turbidity	1.0	8.0
Disolved Solids	6,065 ppm	74 ppm
Chemical Oxygen Demand (KM_nO_4)	18.36 "	7.63 "
Total Alkalinity (as $CaCO_3$)	342 "	4.2 "
Total Hardness (as $CaCO_3$)	1,093 "	24.5 "
Calcium Hardness (as Ca)	180 "	1.4 "
Magnesium Hardness (as Mg)	154.3 "	5.06 "
Chlorine ion (as Cl)	3,622 "	133 "
Ammonia Nitrogen	0.02 "	0.04 "
Nitrogen-Nitrate	0.00 "	0.02 "
Nitrogen-Nitrite	0.74 "	0.31 "
Sulphate ion	0.21 "	0.00 "
Iron	0.00 "	0.95 "
Manganese	0.07 "	0.04 "
Total Bacterial (*)	80/ml	400/ml
Coli Form Group (*)	Negative (-)	Positive (+)

Location	Proposed RPC site	Central area of the island
Judgement and comments on the water quality	-Taste is salty and disolved solids, chlorine ion and hardness show so high value that the water is no doubt influenced by sea water. -The water is not polluted by human activity. -pH ranges in neutrality being convenient for use. -From the aboves, the water can be used for miscellaneous purpose of RPC, though can not be used for drinking/cooking use.	-The water is turbid in spite of spring water. -pH value is slightly acid. -The water contains iron. -The water is slightly polluted. -The water seems not to be able to be used for water source od RPC, since water flow quantity is too small presently.

Note: (*) was measured at the sites.

5) Public health

Comments are set out below on the additional data which had proposed construction of a hospital with 36 beds for 7,000 refugees.

(1) Building

Since the drawings are designed for the Philippine's standard emergency hospital, it is suggested to reduce the floor area and to change the construction materials RPC use.

a) Reduction of the floor area.

- To change the proposed separate type bed rooms to two large bed rooms (male and female), although a certain privacy be provided.
- To concentrate toilets for patients.
- To reduce the floor area of the out-patient-department and the administration area taking into consideration number of staff and administrative system.

- It will be possible to reduce floor area from 40 m^2/bed to 20-25 m^2/bed by abovementioned revices.

b) Change of the construction materials

- Reinforced concrete structure is not considered suitable for RPC. It is recommended to utilize local materials (like as wooden structure) to the extent possible.

- To change the materials of floor, wall, and ceiling finishes to available local materials.

(2) Staff

Staff pattern appears to be suitable.
Especially preventive serivces is considered necessary.

(3) Medical services and equipments

They are in general acceptable, however further study will be necessary to determine more specifically what items are considered necessary in view of conditions of various infrastructures such as water supply, electricity, gas, etc., and supply conditions of medical expendables.

6) Budget

(Additional data: Annex (h) General Lay-out of Physical Plants and Other Facilities of RPC Project.)

Summary of facilities and costs are estimated at ₱70.00 million. However, in the absence of thorough breakdown of cost estimate, technical feasibility of the project cannot be fully assessed to draw specific conclusive statement.

COMPARISON OF BUDGET LIST AND IT'S BACK DATA

	Estimated Cost	Back Data
1. Water system	₱ 4.70 million	-
2. Electrical system	1.10	-
3. Road nets	11.59	Annex A Annex C (11.59)
4. Port facilities	6.00	Annex E (6.00)
5. Domitories	25.77	-
6. Airport facilities	2.87	Annex D (1.20)
7. Hospital facilities	2.56	Annex G (3.00)
8. Communication F	1.50	-
9. Security F	2.40	-
10. Administration F	1.64	-
11. Communal bath & toilet F	3.60	-
12. Mess & communal kitchen	3.42	-
13. Flood control & drainage system	1.13	Annex F (1.15)
14. Recreational/athletic F	0.96	-
15. Workshop facilities	0.19	-
16. Educational	0.57	-
Total:	₱ 70.00 million	

APPENDIX I

REPORT ON

THE ESTABLISHMENT OF

A REFUGEE PROCESSING CENTER

IN THE REPUBLIC OF THE PHILIPPINES

I. GENERAL LAYOUT OF RPC

1. Proposed Site

On Tara Island, seven possible areas for the establishment of RPC and/ or national refugee camp(s), varying in size from 5 to 30 hectares have been identified by a survey conducted by the Philippines Navy. Among these three alternative sites, YAWAO POINT SITE has been selected by the Government of the Philippines as the most suitable.

Some of the major reasons of selecting Yawao site are:

1) The site has relatively wide and flat area;

2) Only two families of local inhabitants are living nearby the site, while other possible sites with better topographical areas are being inhabited by comparatively more people.

3) The proposed location of the pier along the beach is close to the site, distance of which is only about 500 yards and therefore it is considered most convenient from various aspects particularly from transportation point of view.

4) Water springs are identified within the site and its vicinity spots and shallow wells dug by the Navy show availability of sufficient quantity of water for living purposes, excluding drinking water.

2. The RPC Site (Yawao Site)

The Yawao site is located in the middle part of the east coast of the Island. It has an area of approximately 25 hectares of flat terrain mostly covered with trees.

Within the site, there are two lagoons accumulating rain water from vicinity area. Water depth in full wet season is reported to be about only one meter and it is completely dried up during the dry season. Southern and northern lagoon has its water area of approximately 4.4 hectares and 0.9 hectares respectively during rainy season, including swampy areas.

Water of the lagoons are rather salty because of back flow of sea water during dry season with high tide.

There exists an abandoned air strip with approximate length of 400

TARA ISLAND

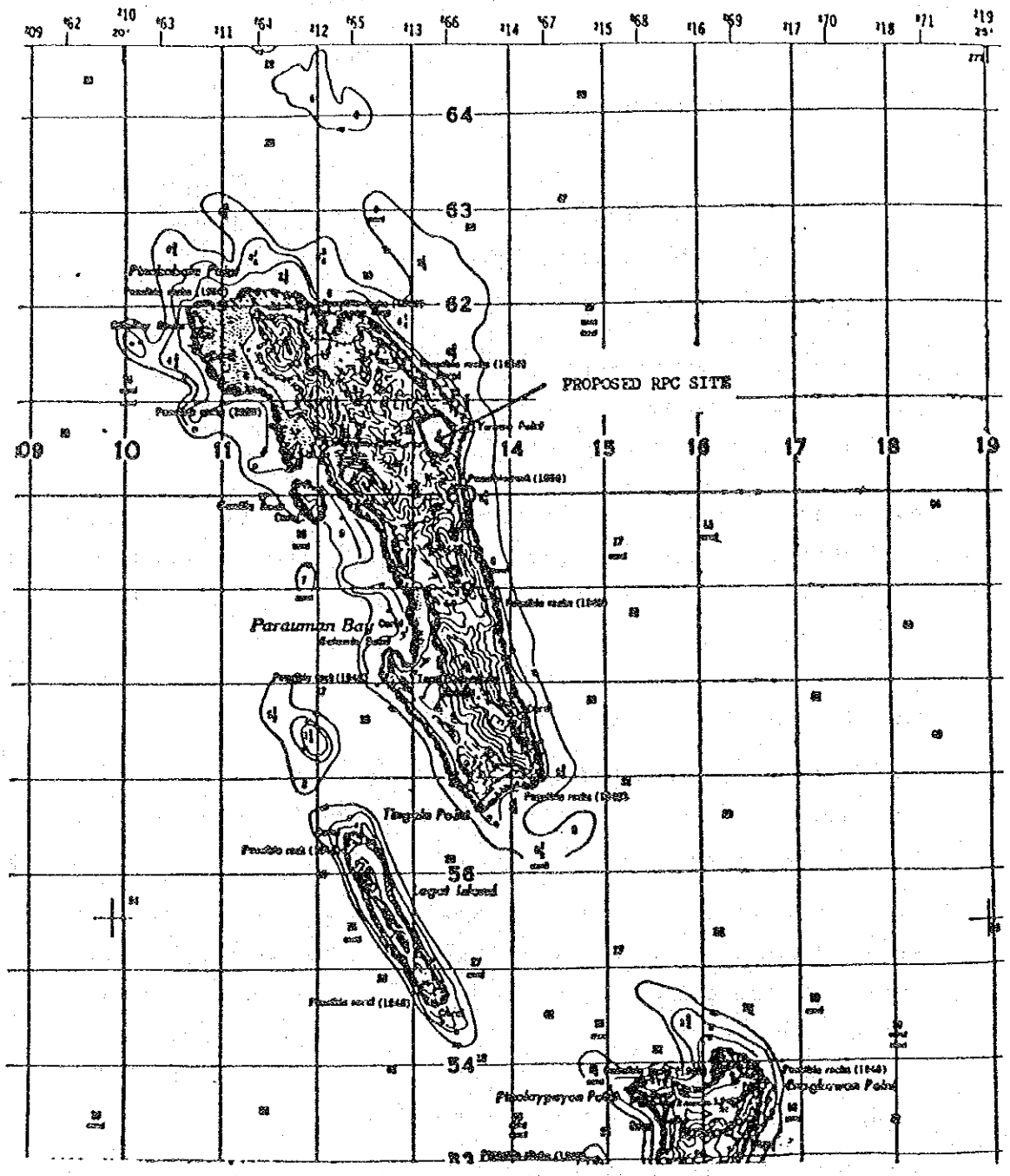

PROPOSED RPC SITE
Parauman Bay
Tingala Point
Legat Island
Pinalaypayan Point
Bragkawan Point
64
63
62
56
54
09
10
11
14
15
16
17
18
19

meters with no paved runaway and aviation facilities.

Area adjacent to the site to the west is hilly with gentle and steep slopes combined; some gentle part of the hills are paddy fields cultivated by the inhabitants.

For purposes of facilitating construction of refugee camp, two families of the local inhabitants have already been relocated to the southern part of the Island by the government. To date, four administration buildings, presently used by construction workers have been almost completed, and one refugee barrack annexed with toilet/shower and kitchen facilities are under construction. Building materials for several ware barracks are already available in the site.

The construction works are being undertaken by a Naval Force and mission has been informed that these facilities are for the purpose of temporary accomodation of approximately 1,000 people of "Tung An" in time for typhoon season. These facilities are scheduled to be converted to RPC when the national refugee camp or camps is or are constructed on other alternative sites.

Attached in the subsequent pages are an aero-photography of the site and its vicinity, and a chart showing findings of the mission during the site visit.

3. Standard of Population Density and Land Requirement for RPC

Further to careful analysis on RPC's operation and facilities, also on people's living environmental requirements, etc., the mission found that an optimum gross population density of RPC would be 300 persons per hectare.

In each particular RPC case, this standard would, of course, differ according to respective site conditions such as drainage condition, topographical condition, etc. However, these disparity will be somewhat within about 20 per cent.

In Tara RPC case, land requirement is computed as follows:
To accomodate 5,000 refugees in RPC, taking net population density of residential building group as 500 persons per hectare, a 10 hectare of land is required.

In addition, 3 hectares of land for administrative facilities, and

CONCEPTUAL SITE CHARACTERISTICS MAP

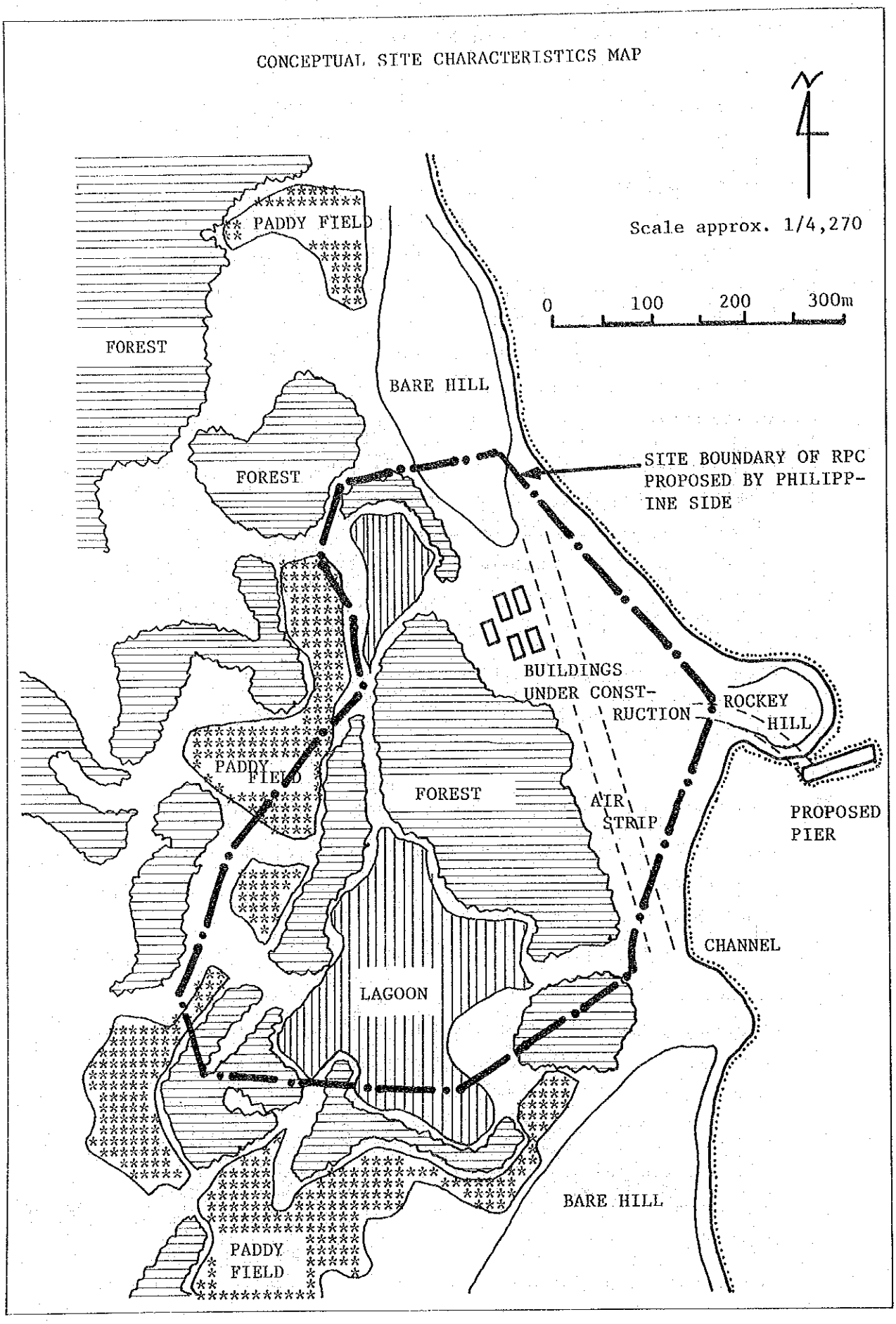

20 per cent of total area for open space, road, drainage and other purposes are considered necessary, and it is, therefore, computed as approximately 16.3 hectares of land is required on which actual buildings and other facilities are to be layed out.

Keeping in view this figure as a site area, a gross population density is given as 300 persons per hectare which meet the standard as indicated.

4. General Layout Principles

As set out below, some of the basic principles in preparing physical layout plan are:

1) Maximum use of existing land characteristics and topographic advantages be taken into account, with a view to minimizing cost for earth moving works and time required for site preparation works. Particularly, drainage conditions be carefully reviewed so as to ensure good sanitary conditions with minimum cost.

2) Various facilities required be constructed in such a manner to ensure most efficient and effective operation of RPC. A well-systematized grouping system of the people and of the buildings and other related facilities as well would set forth the basic guidelines to ensure the smooth management of RPC.

5. Some Comments on Site Characteristics in Connection with Layout Plan

The following are some of the major findings of the mission on land characteristics of the proposed RPC site in connection with site layout plan, for which further study and additional survey are to be undertaken for preparation of the final layout plan and detail design thereafter.

1) Existing lagoons

Existing lagoons are the major drainage systems of the site. All rain water in the site and vicinity areas flows into the lagoon and are discharged to the sea through a natural channel which lies at the southern end of the site.

A plan to reclaim the lagoon totally and utilize it for RPC facility site would require a considerable amount of earth works

and also a complete drainage system is to be provided anew. It is, therefore, recommended that a reclamation works be minimized to the extent possible.

A sanitary condition of the lagoons, particularly in dry season, is expected to become critical because of accumulated outflow from septic tank or other used water to the lagoons. Some measurements should be considered to maintain a satisfactory level of sanitary condition of the lagoons including periodical inspection programme, chemical treatment and limitation of use of lagoon water by the people.

2) Site area

The proposed site has 24 hectares of area comprising the area of the lagoons, drainage channel and air strip which cannot be used for RPC facilities. Since these area are to be excluded, net usable land area available for various facilities for RPC will be less than 10 hectares only which is substantially less than the land area required for RPC. In view of the foregoing, expansion of the site area to the adjacent hilly area would have to be taken into consideration. Surrounding paddy fields appear to be the possible expansion area, however, taking locational disadvantage of the Tara Island regarding supply of fresh vegetables, these paddy fields could be the source of fresh vegetables and other food crops to be cultivated by refugees themselves and therefore it may be considered preferable to retain these fields for such purposes.

This calls for further detailed study regarding possibility of expansion of RPC site to the hilly area. The results of the study would affect to a greater extent total construction cost and RPC's density standards.

3) Air strip

For aviational use the existing air strip requires substantial improvement and to this end minimum aviation design criteria be considered and a plan therefor be prepared. In this case, a considerable area have to be set aside for purposes of avational facilities. To minimize land requirement for aviation operation, use of helicopter and its feasibility should be ascertained.

4) Detailed topographical and soil survey

Detailed topographical and geological surveys are considered essential to provide basic data and information for preparing a RPC master plan and detailed design. Metheological data of the site or of an equivalent value have to be collected and analyzed. Also, hydrological information of the lagoons and drainages should be collected.

II. BASIC INFRASTRUCTURES

1. Pier at Yawao Point

Yawao Point has a sandy shore and surrounded with a coral reef extended to about 75 yards (69 meters) from the shore, then abruptly change gradient from 1 fathom to 3 fathoms in distance of 100 yards (91 meters). Current velocity is 2 knots and moves to northeastern direction.

Judging from the offhand hydrographical survey as such, jetty should be located more than 100 meters offshore to allow approach by even small size ships and boats.

Proposed approach road to the pier, running on the rocky steep hill, does not appear to be feasible and it is recommended that an alternative design should be prepared for the access road.

Following are some of the major items to be reviewed and analyzed in designing pier and access road:

Pier/Jetty

1) Seawater depth along the bay
2) Soil condition of the sea bottom
3) Estimated tonnage of the boat
4) Size of pier/jetty
5) Kinds of structure (materials)
6) Location of pier/jetty
7) Transportation system

2. Access Road

1) Road design standard
2) Road length

III. CONSTRUCTION OF RPC

1. Kinds of RPC Facilities

Proposed RPC facilities would be classified into three categories in relation to the grouping structure of the people. These are: i) dwelling cluster units, ii) community group facilities, and iii) central administrative facilities.

i) Dwelling cluster units to accomodate approximately 300 people:

- dormitories
- communal kitchens
- communal toilet/shower
- wash spaces
- septic tank
- court yard

ii) Community group facilities for approximately 2,000 people:

- meeting/classrooms
- dispensary
- open field
- waste collection/incineration pit

iii) Central administrative facilities:

- administrative/security offices
- houses for staff
- fining/kitchen (for staff)
- guest house
- hospital
- store house
- maintenance workshop
- power house
- garage
- guard posts
- signal tower
- open recreation field

These facility groups will be constructed in hierarchial manner, taking into consideration physical layout prepared in accordance with the specific features of the site.

Conceptual grouping structures is illustrated as follows:

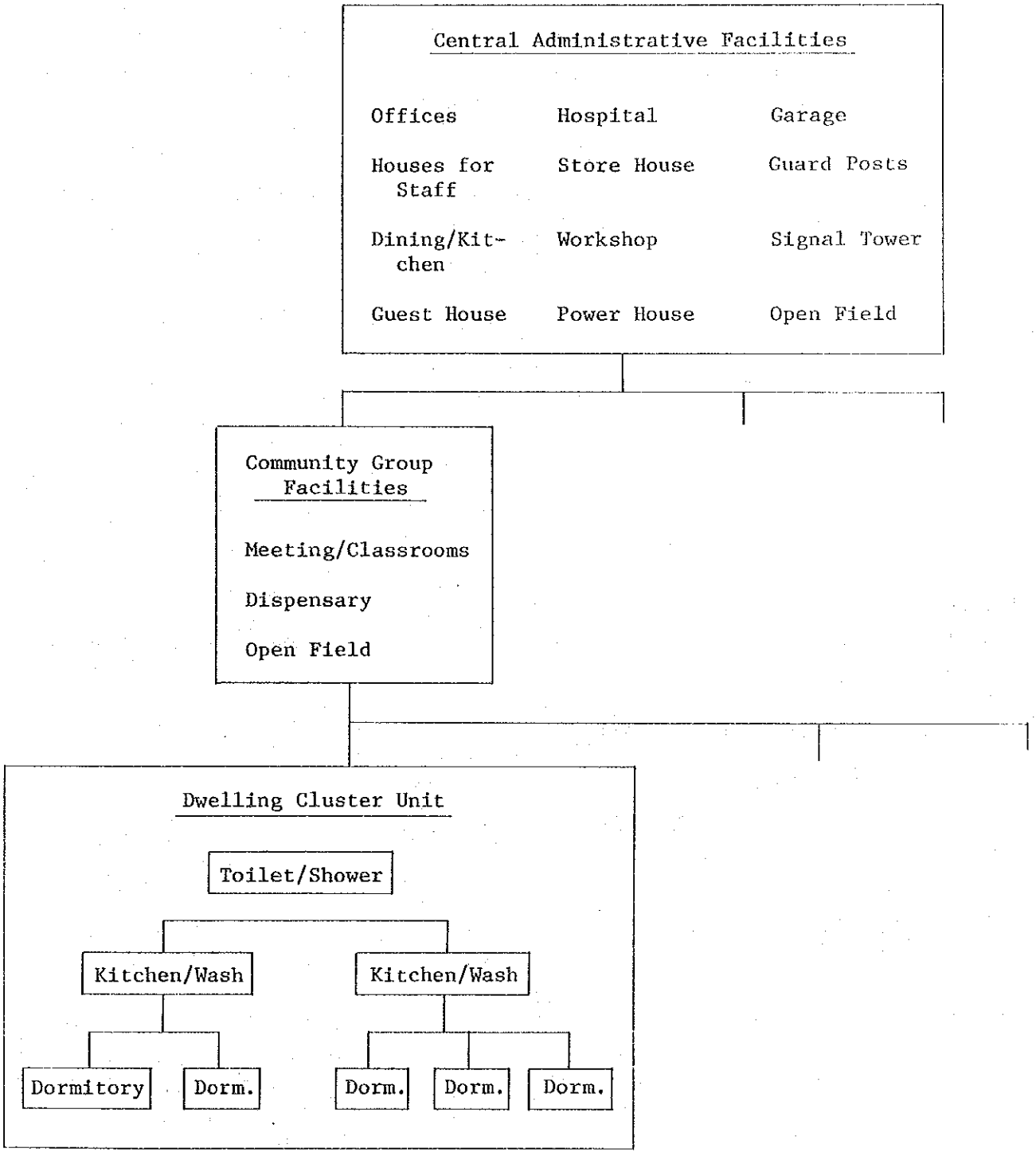
Central Administrative Facilities
Offices
Hospital
Garage
Houses for Staff
Store House
Guard Posts
Dining/Kitchen
Workshop
Signal Tower
Guest House
Power House
Open Field
Community Group Facilities
Meeting/Classrooms
Dispensary
Open Field
Dwelling Cluster Unit
Toilet/Shower
Kitchen/Wash
Kitchen/Wash
Dormitory
Dorm.
Dorm.
Dorm.
Dorm.

2. Design Criteria

- Dormitory:	3-4 m^2 of floor area will be considered adequate per person. Natural ventilation and lighting are required. Movable partitions like bamboo panels are to be provided for the purpose of family privacy.
- Kitchen:	Kitchen space will be provided for 1-2 shifts per meal cooling time. Natural ventilation is required.
- Toilet/Shower:	One booth per 10-15 refugees will be necessary. Water proof wall is required for shower booth. Natural ventilation is required.
- Washing:	Cement floor and wash basin will be necessary nearby shallow wells.
- Meeting/Calssroom:	Adequate floor space for different purposes will be necessary such as for meeting rooms, classrooms and library.
- Office:	4-6 m^2 of floor space will be necessary per staff. Several partitions will be necessary. Office space will be divided into 2-3 units for administrative and security offices.
- House for Staff:	Several types of houses will be provided for the following: - administrator's house - assistant administrator's house - apartment house for married staff - dormitory for single staff Individual houses and apartment will be provided with their own kitchen and toilet/ shower rooms.
- Guest House:	3-5 rooms will be necessary.
- Hospital:	20-25 beds will be provided.

	20-25 m^2 of floor space will be necessary per bed.
- Store House:	Emergency food stock, administrative miscellaneous stock, fuel stock, etc. will be necessary.
- Workshop:	Maintenance and repair parts for vehicles, electrical and sanitary facilities, etc. will be provided, and simple sawmilling may be necessary.
- Power House:	Natural ventilation is required.

3. Construction Materials

Construction materials are to be determined considering the following:

1) climatic condition of RPC site

2) objective and expected life time of facilities

3) urgency of construction of RPC

4) transportation facilities available and availability of sources of various materials to be transported from nearby islands.

Construction materials should be determined in accordance with the following four ranks:

Rank 1: House for staff, dining, guest house, hospital

Rank 2: Office

Rank 3: Community group facilities

Rank 4: Dormitory for refugees

For additional facilities, construction materials should be determined according to their different purposes for utilization.

4. Review on Housing Plan Prepared by the Philippines Government

The Mission has reviewed the housing plan prepared by the Government on preliminary basis, and found it well prepared and acceptable in general. However, certain improvements and modifications in the course of preparing detailed design are suggested as set out below:

1) Floor space for housing, particularly the dormitory for refugees,

community group facilities and the hospital are considered insufficient.

2) Toilet/shower and kitchen facilities are inadequate

3) Wash space for refugees, guest house, workshop and garage are to be provided.

4) Privacy within refugee dormitory is considered necessary.

5) Lawanit boards for outside walls of offices and for partitions of shower booths are not adequate.
Those boards are not strong enough for exposure to rain, water and monsoon. Other locally available materials such as woods for outside walls and galvanized iron sheets for partitions are considered adequate.

IV. PUBLIC HEALTH

Public Health facilities including preventive health care, routine and emergency care as well as for medical examinations are considered necessary.

The basic idea of medical care system is comprised of three stages: i) primary care, ii) secondary care, and iii) tertiary care.

For primary care, dispensary unit will have to be provided to enable patients themselves or their families to receive medicine and treatments for light care.

For secondary care, one hospital with the provision of 20-25 beds will have to be constructed in the center of RPC not only for use of 5,000 refugees but also for inhabitants of the Island in case of emergency. For this purpose, about 30 staff (including 2 doctors, 5 nurses and 1-2 technicians) are to be made available.

The hospital will be equipped to provide the following services in general:

1) Preventive Health Care

- Health education
- Environmental sanitation
- Control of communicable disease

- Control of Malaria
- Vaccination

2) Medical Examination

- X-ray facilities
- Limited laboratory for blood, urine, stool, etc.

3) Patient Treatment

- General clinic
- Dental clinic
- Emergency care
- Minor operation
- Delivery care
- Limited rehabilitation care

Major operation or more skilled treatment will not be available at RPC since those would require special doctors, technicians and sophisticated medical equipments.

For tertiary care, hospitals on Coron Island or in Manila should be availed of by patients requiring emergency and serious operations and treatments. Emergency transportation facilities for those patients should receive special attention.

V. WATER RESOURCES AND SANITATION

1. Water Sources

According to the filed reconnaissance of the Mission, accompanied by experts of the Government and inhabitants, it was found that fresh water (unsalty water) is available on the Tara Island in small quantity, particularly during the dry season.

There exists three or four streams on the Island. They, however, are rather small and their down streams are rather swampy and appear to be not suitable for drinking purpose. Apparently, upper streams are very small; length of each stream is less than several hundred meters, and reportedly become dried up in dry season. It is due to small catchment area of each stream, though annual rainfall is reported to be as much as 2,413 mm.

The streams make lakes at their estuaries in wet season; their surface area are approximately 0.5 - 3.0 ha., with depth of about

1-2 meters at the center. The water of these lakes, however, are usually salty and become dried up in dry season. Inhabitants of the Island obtain salt crystal for their living use from the dried lakes. Water of the lakes, therefore, are definitely not suitable for use of the RPC.

It is thus concluded not probable to identify adequate fresh water sources required for the RPC. Currently, inhabitants and workers living on the Island take water from very shallow groundwater which is slightly salty, or from small springs which are scattered at places and rather turbid, or from rain water directly; although their quantity is insufficient and quality doubtful.

Accordingly, for RPC, it is proposed that drinking/cooking water be taken from fresh water source and water for miscellaneous use such as bathing, washing, toilet, cleaning, etc. be made available from unfresh water and/or salty sources.

2. Water Requirement for Drinking/Cooking

Water requirement for drinking/cooking purposes is estimated at:

(5 - 10 liter/capita/day) x 7,000 persons =
35 - 70 m^3/day = say, 70 m^3/day

Therefore, approximately 70 m^3/day (0.81 leter/sec.) of fresh water of somehow stored.

3. Study Needed

Immediate study to be carried out as quickly as possible is how to secure fresh water for drinking/cooking use. The availability of fresh water required in the amount of 70 m^3/day has not yet been confirmed.

Following studies on availability and/or possibility of obtaining sufficient fresh water should be undertaken at sites in details:

a) possibility of construction of artificial reservoir (small earth dam on the stream)

b) development of natural spring water

c) drilling test for ground water

d) storage of rainfall water

e) transportation of drinkable water from nearby islands by ship

f) combination of the above methods.

Above, a), b), c) and d) are methods of obtaining fresh water locally within the Tara Island. If fresh water is found not available within the Island, the final solution would be: e) transportation of drinking water from nearby islands, which would be the last resort, may have to be considered.

NOTE:

Transportation of Drinking Water

This is the last alternative to be considered for obtaining drinking water, outline of which will be as following:

- Water will have to come from a city located in nearby island where some excess water is available. Water is to be treated and must be drinkable. Water will be well-sterilized by chlorine chemicals.
- Water will be transported by a navy tanker several times a week. Water for drinking/cooling purpose will be required in the amount of 70 m^3/day. Therefore, volume of water to be transported by a tranker at one time will be 140 m^3, provided it is transported every other day (once every two days).
- Water delivered at the jetty of the Tara Island will be pumped up to an elevated water tank. The proposed RPC site is conveniently located adjacent to the jetty.
- The elevated tank will be constructed at the site. Level of the height of the tank will be approximately 20 m higher than that of the RPC elevation. The capacity of the tank should be sufficient to store water of several days requirement. Two tanks are proposed to be constructed and each one be used alternately. Each tank will have storage capacity of 150 m^3 approximately, which is equivalent to two days' consumption.
- Transmission pipeline from the jetty to the tanks will be installed. Pumping facility and accessories will be equipped with the pipeline.
- Water will be supplied from the elevated tanks by gravity through distribution pipelines and water taps. The residual chlorine shall be checked at times; if it is not sufficient, chlorination shall

be added at RPC site or be strengthened at the original site.

4. Water Treatment

Water treatments necessary for drinking water are as follows:

- For a) and b): (referred to at 3. above)	surface water or spring water --- rapid sand filtration plus chlorination;
- For c):	groundwater --- chlorination only may be applied if it is taken from tube-well;
- For d):	rain water --- some treatment and chlorination;
- For e):	transported water --- Additional chlorination at the site or strengthening of chlorination at a site where water is originally obtained.

5. Water for Miscellaneous Use

Water for miscellaneous use such as bathing, washing, toilet, cleaning, etc., will be obtained within/near RPC site, by means of shallow wells with manual wing pump, though it is slightly salty. Five shallow wells with manual wing pumps are installed at the site for test; they are located with a distance of about 50 m each. Their yields seem to be rather satisfactory, although detailed technical data (maximum yield, suitable production, influence of a well to the other wells, etc.) are presently not available. These wells require further indepth studies to arrive at reliable conclusions on various issues as cited above. Potentials for development of these wells should also receive careful attention.

Water quantity required for the miscellaneous use is estimated at:

(40 - 50 liter/capita/day) x 7,000 persons =
280 - 350 m^3/day = say, 300 m^3/day

Rainfall catchment area at the site is considered about 0.5 km^2 minimum. Preliminary computation, assuming 10% of rainfall is considered obtainable from shallow wells, would show that annual average yield of wells will be:

0.5 km^2 x 2,413 m/year x 10% ÷ 365 days = 330 m^3/day

In any event, sources of water for miscellaneous use should also be the subject of further study.

6. Night Soil Disposal

Night soil is proposed to be washed out by water to septic tank where night soil is to be treated with anaerobic bacteria. Finally, water overflown from the septic tank after treatment will flow into downstream of the lake river where it is proposed to be used as a space for recreation purposes.

7. Solid Waste Disposal

Solid waste, including garbage will be collected at a place for disposal which is proposed to be provided at each group of housing. The solid waste shall be incinerated/compacted/sterilized at regular intervals.

APPENDIX II

ADDITIONAL DATA PREPARED BY GOVERNMENT AGENCIES CONCERNED

HUKBONG DAGAT NG PILIPINAS
ANG TANGGAPAN NG DAGATNING PAGAWAING BAYAN
BNS, Metro Manila

31 July 1979

The Inter-agency technical reports, as required by UNHCR, concerning the feasibility of establishing a Refugee Processing Center in Tara Island, are summarized as follows:

a) Road within Refugee Processing Center (MPH):

For this project, studies for two (2) schemes of improvement have been undertaken.

SCHEME I - proposes to adopt a higher level of improvement based on the following design standards: (Annex A)

Road Alignment: In accordance with the road layout indicated in the preliminary development plan for the Refugee Processing Center. The total raod network length is 2.50 kms., portions of which lie on the flat low areas and other portions on the adjacent hilly terrain.

Design Grades: The grades on the flat areas are raised above existing ground levels to allow for proper drainage and good sanitary condition in the site. On the hilly areas, minimized earthwork for economy is considered in the preliminary design of the gradeline which would not exceed 12%.

Pavement: A 2-lane concrete pavement, 6.10M wide and 0.20M thick is adopted.

Drainage: Concrete curbs and gutter, curb inlet manholes and underground drainage facilities (Reinforced concrete pipes)

Other facilities: 0.75M concrete sidewalk and a 1.00M wide planting strip for beautification. Grouted riprap and stone masonry slope protection works on high embankments. Estimated project cost is ₱8.30M with project duration of 8 months.

SCHEME II - in on the same road alignment and follows the same grade design standard, as in Scheme I. The clear roadway width is 7.60

meters with a surfacing of aggregate base course materials. For drainage, open canal ditches and reinforced concrete pipe cross drains are provided. Grouted riprap and/or stone masonry slope protection works are likewise provided for on high embankments. Estimated cost of the project is ₱3.447M with prject duration of 7 1/2 months. (Annex B)

b) Access Road to the Community Center (MPH):

The proposed access road extends southward from the Refugee Processing Center site to the Community Center, through rolling (hilly) terrain with an approximate length of 3.80 kms. Portions of the road are on a sidehill location. The design standards adopted are as follows: (Annex C)

Horizontal Alignment: A minimum radius of 30 meters for a design speed of 30 kph.

Grade: Maximum grade of 12%.

Pavement: Clear roadway width is 7.00 meters with a 4.00 meter center width surfaced with aggregate base course and 1.50 meters shoulder width on both sides surfaced with aggregate sub-base.

Other Features: For drainage, open side ditches and reinforced concrete pipe culvert cross drains provided. Grouted rip-rap and stone masonry works for slope protection on high embankment and sections subject to scouring. Estimated cost of the project is ₱3.290M with peoject duration of 6 1/2 months.

c) Rehabilitation and Improvement of Airstrip (MPH):

The improvement of the abandoned airstrip conforms with the minimum standard design requirements for a Rural Airstrip.

Basic Runway	:	400M x 15M
Overall Airstrip	:	460M x 30M
Apron	:	70M x 40M (2,800 sq m)
Surfacing	:	Aggregate Base Course surfacing for the runway and aggregate subbase surfacing on the outer portion of the airstrip.

Estimated cost of the project is ₱1.198M with project duration of 7 months. (Annex D)

d) Pier and Beaching Area (BPW):

This project includes construction of a rock causeway approach, a reinforced concrete wharf approach and a reinforced concrete wharf measuring 6.0M wide by 60.0M long. Also included is a 360M long rock mound seawall to predude soil erosion. Total estimated cost of the project is ₱6.00M with project duration of 300 days (Annex E).

e) Flood Control and Drainage System: (BPW)

The project involves construction of a checkgate for the control of sea water intrussion and channel improvement of the outlet of the existing lagoon to drain storm run-off water. The lagoon is also proposed to be utilized for recreation and socio-economic purpose. Estimated project cost is ₱1.150M with project duration of 60 days (Annex F).

f) Infrastructures Requirement for Health Services for 7,000 Refugees (MOH):

MOH recommends construction of a 36-bed capacity H-shaped hospital. It will be a single-storey, reinforced concrete building, with a total floor area of 1,134 sq meters. Estimated project cost ₱2.2992M with project duration of 360 days (Annex G).

g) General Layout of Physical Plants and other Facilities of RPC Project (PN):

Excluding the newly constructed 13 wooden prefabricated buildings, 1 refugee hut, 1 communal bath & toilet, and 1 kitchen, the Development Plan of RPC project in Tara Island involves construction of following buildings/facilities:

1) Guest House
2) Admin Bldg.
3) Administrative Quarters
4) Mess Hall/Canteen
5) Staff House (Married)
6) Staff House (Single)
7) Work Shop/Garage
8) Aircraft Hangar
9) Security Barracks

10) Signal Tower
11) Multi-Purpose Building
12) Dental Dispensary
13) Refugee Housing
14) Communal Toilet & Bath
15) Communal Kitchen & Washing Shed
16) Athletic Area & Facilities (basketball, volleyball, tennis court and other facilities)
17) Security Fence
18) Mess Hall and Galley

Total estimated cost of these projects (excluding projects tasked to other agencies) is ₱40.48M with project duration of 180 days (Annex H).

h) No report has been submitted on the following:

1) Drilling of 2 test wells (BPW):

BPW drill test team still at Tara Island. Report shall be submitted before 10 Aug. 79.

2) Additional survey of RPC site (BOL):

BOL survey team still working at Tara.

3) Power requirement of RPC area (NPC):

Per into from the VP for corporate planning of NPC, report shall be submitted on August 3, 1979.

4) Communication requirement of RPC project (MPWTC):

Report shall be submitted on August 3, 1979.

The proposed development of the 7,000 refugee RPC Tara project involves an aggregate amount of ₱70.00M, as summarized in Annex I. Costing for water, power and communication requirements were roughly approximated in the absence of the detailed studies by agencies concerned. A revised costing if necessary, will be submitted upon submission of technical studies on water, power and communication requirements.

RODOLEO P YAMBAO
CDR PN
The Naval Public Works Officer

PRELIMINARY BUDGET COST ESTIMATE

PROJECT : Construction of Road Networks within the proposed Tara Refugee Processing Center

LOCATION : Tara Island, Coron, Palawan

LENGTH : 2.50 Kms.

PROJECT DESCRIPTION: (Scheme I)
6.10M. Wide concrete pavement with concrete curb & gutter, concrete sidewalk and underground drainage facilities.

SUMMARY OF WORK ITEMS, QUANTITIES AND ESTIMATES

ITEM NO.	DESCRIPTION	UNIT	QUANTITY	UNIT COST	AMOUNT
100	Clearing & Grubbing	Has.	5	₱5,245.00	₱ 26,225.00
105	Roadway & Drainage Exc.	Cu. M.	15,000	16.00	240,000.00
106	Excavation for Structure	Cu. M.	3,000	20.00	60,000.00
107	Borrow	Cu. M.	24,400	40.00	976,000.00
108	Aggregate Sub-Base	Cu. M.	3,850	68.00	261,800.00
110	Foundation Fill	Cu. M.	375	70.00	26,250.00
200	Aggregate Base Course	Cu. M.	4,250	157.00	667,250.00
316	Portland Cement Concrete Pavement (0.20M Thick)	Sq. M.	15,375	174.00	2,675,250.00
405	Concrete Class "A"	Cu. M.	175	886.00	155,050.00
406	Reinforcing Steel	Kilo	7,500	8.70	65,250.00
412	Stone Masonry	Cu. M.	750	350.00	262,500.00
413-1	18"ϕ RCCP	L. M.	640	185.00	118,400.00
413-2	24"ϕ RCCP	L. M.	1,540	290.00	446,600.00
413-3	30"ϕ RCCP	L. M.	440	380.00	167.200.00
413-4	36"ϕ RCCP	L. M.	75	480.00	36,000.00
413-5	48"ϕ RCCP	L. M.	75	780.00	58,500.00
500	Grouted Riprap	Cu. M.	1,375	310.00	426,250.00
502	Conc. Curb & Gutter Type "A"	L. M.	5,000	87.00	435,000.00
503	Conc. Sidewalk (0.10M Thick)	Sq. M.	3,750	66.00	247,500.00
505	Comb. Curb Inlet Manhole	Units	125	2,060.00	257,500.00

ITEM NO.	DESCRIPTION	UNIT	QUANTITY	UNIT COST	AMOUNT
516	Demountable Office & Camp Building	L. S.	-------	-------	75,000.00
	TOTAL DIRECT COST ----------				₱7,683,525.00
	Const. Eng'r & Adm. Overhead (6%) --------				461,011.50
	Preliminary Engineering (2%) ----------				153,670.50
	Total Cost ----------				₱8,298,207.00
	SAY ----------				₱8,300,000.00

NOTE: The above quantities and estimates are tentative only and subject to increase or decrease upon completion of the Detailed Engineering for the Project.

SUBMITTED BY:

VICENTE P. LAVIN
Staff Civil Engineer
Chief, Planning and Design Division

APPROVED:

DOMINGO B. ASTUDILLO-CESO II
Regional Director

PROPOSED TYPICAL ROADWAY SECTIONS FOR ROAD NETWORKS WITHIN TARA REFUGEE PROCESSING CENTER

(SCHEME - I)

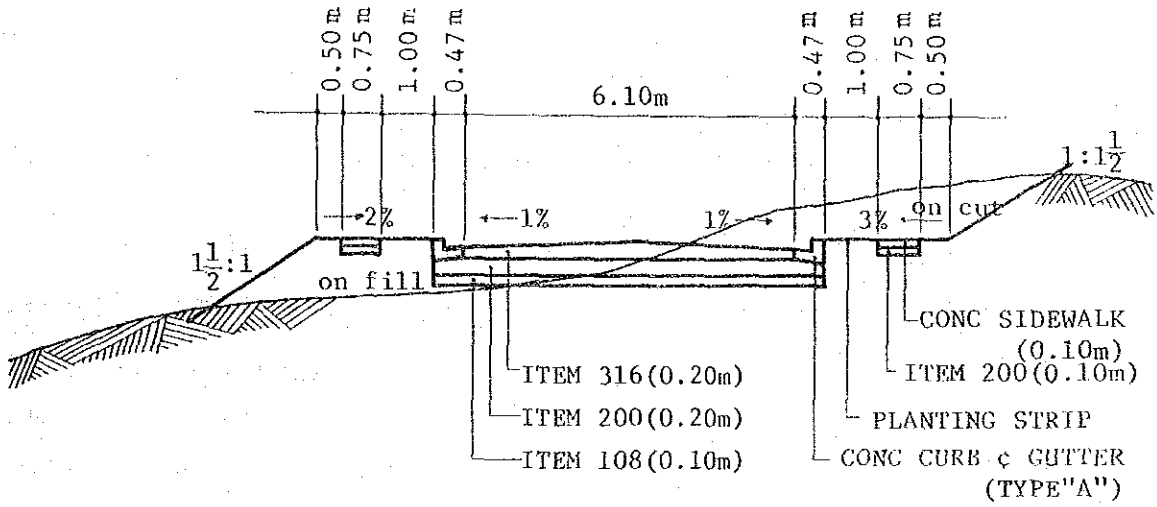

(1) SECTION @ BARANGAY CENTER

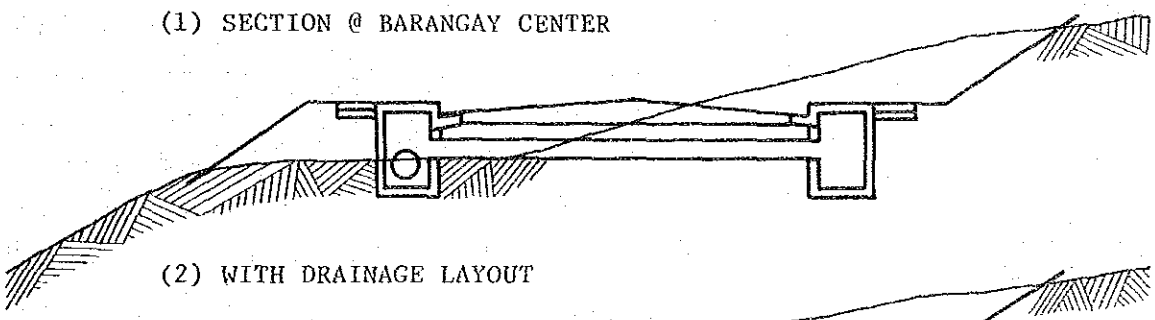

(2) WITH DRAINAGE LAYOUT

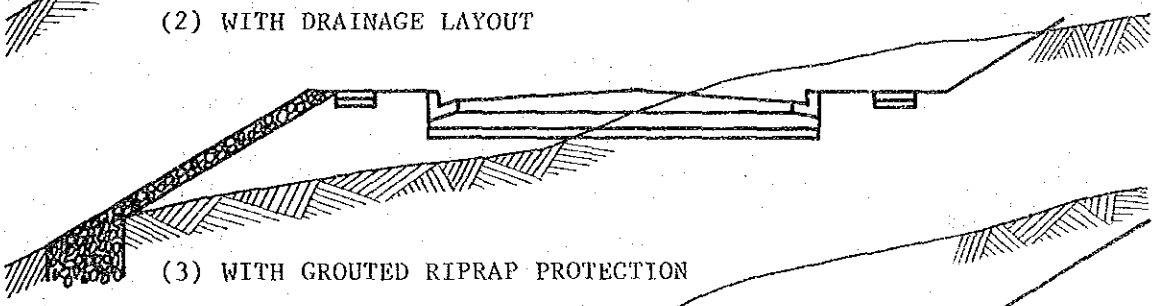

(3) WITH GROUTED RIPRAP PROTECTION

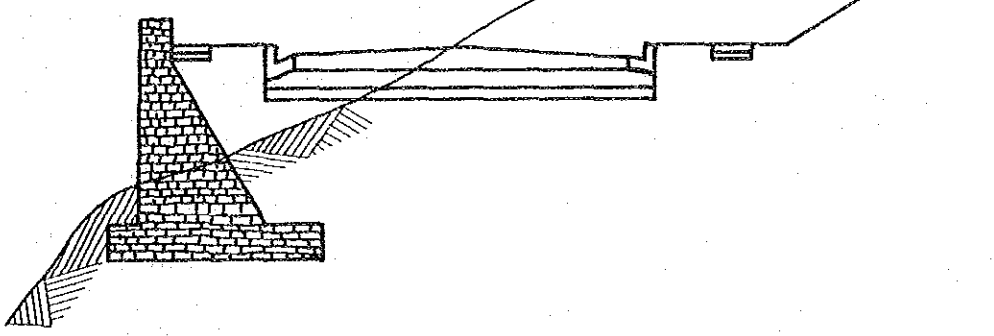

(4) WITH STONE MASONRY WALL PROTECTION

PRELIMINARY BUDGET COST ESTIMATE

PROJECT : Construction of Road Networks within the Refugee Processing Center

LOCATION : Tara Island, Coron, Palawan

LENGTH : 2.500 Kms.

PROJECT DESCRIPTION: (Scheme II)
7.00M. Wide Gravel Surfaced Road open ditches

SUMMARY OF ITEMS OF WORK, QUANTITIES AND ESTIMATES

ITEM NO.	DESCRIPTION	UNIT	QUANTITY	UNIT COST	AMOUNT
100	Clearing and Grubbing	Ha.	5	₱5,245.00	₱26,225.00
105	Roadway & Drainage Exc.	M^3	12,500	16.00	200,000.00
106	Excavation for Structures	M^3	650	20.00	13,000.00
107	Common Borrow	M^3	15,000	40.00	600,000.00
108	Aggregate Sub-Base	M^3	5,250	68.00	357,000.00
110	Foundation Fill	M^3	125	70.00	8,750.00
200	Aggregate Base Course	M^3	4,000	157.00	628,000.00
405	Concrete "Class A"	M^3	175	886.00	155,050.00
406	Reinforcing Steel	Kilo	7,500	8.70	65,250.00
412	Stone Masonry Wall	M^3	750	350.00	262,500.00
412-1	24"ø RCCP	L. M.	90	290.00	26,100.00
412-2	36"ø RCCP	L. M.	90	480.00	43,200.00
412-3	48"ø RCCP	L. M.	90	780.00	70,200.00
500	Grouted Riprap	M^3	2,375	310.00	736,250.00

Direct Cost Sub-Total ----------	₱3,191,525.00
Const. Engr'g & Adm. Overhead (6%) -----	191,491.50
Preliminary Engineering (2%) ----------	63,830.50
Total Cost ----------	₱3,446,847.00
SAY ----------	₱3,447,000.00

NOTE: The above quantities and estimates are tentative only and subject to increase or decrease upon completion of the Detailed Engineering for the Project.

SUBMITTED BY:

VICENTE P. LAVIN
Staff Civil Engineer
Chief, Planning and Design Division

APPROVED:

DOMINGO B. ASTUDILIO-CESO II
Regional Director

PROPOSED TYPICAL ROADWAY SECTIONS FOR ROAD NETWORKS WITHIN TARA ISLAND REFUGEE PROCESSING CENTER

(SCHEME - II)

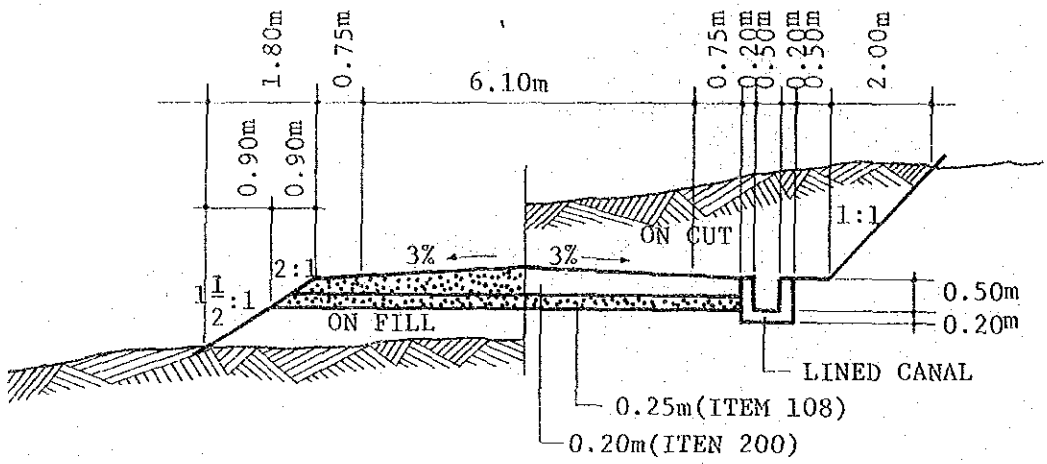

(1) SECTION @ BARANGAY CENTER

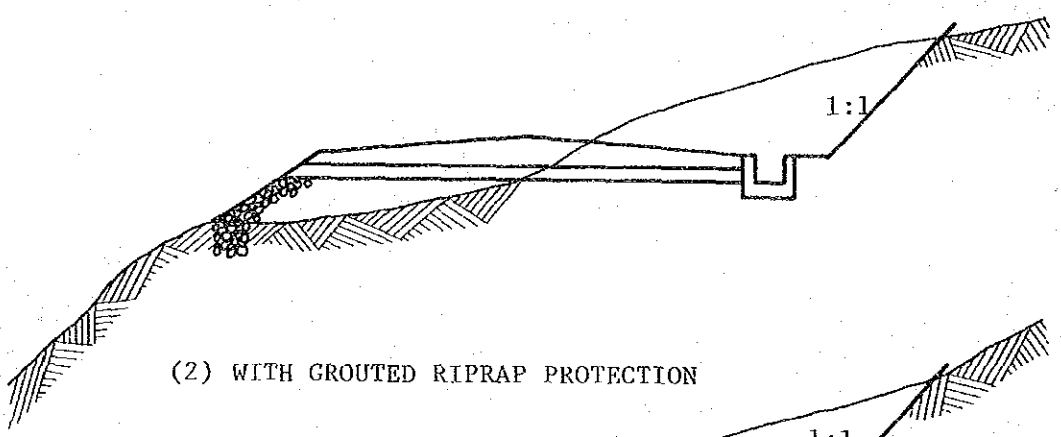

(2) WITH GROUTED RIPRAP PROTECTION

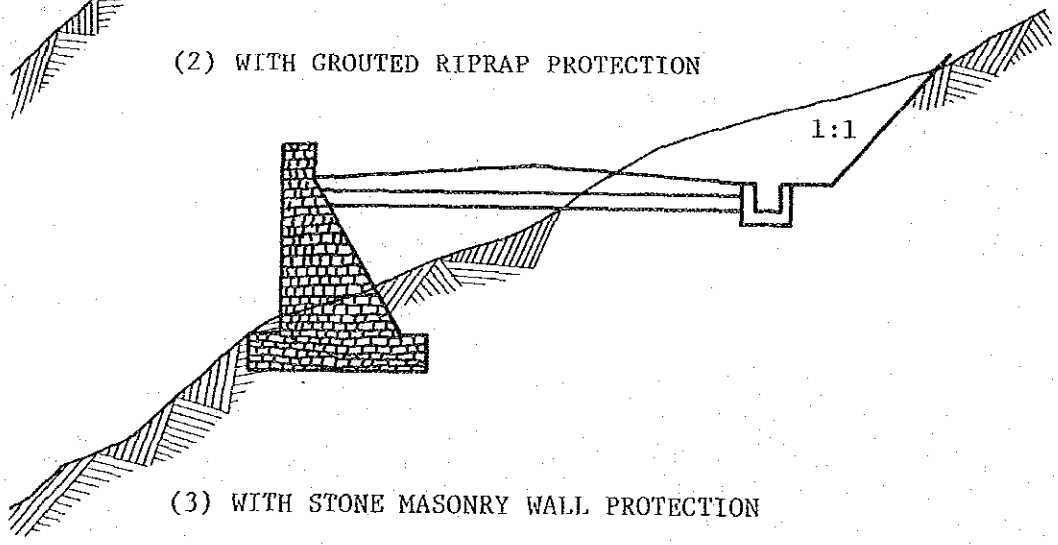

(3) WITH STONE MASONRY WALL PROTECTION

PRELIMINARY BUDGET COST ESTIMATE

PROJECT : Construction of Proposed Community Center Access Road

LOCATION : Tara Island, Coron, Palawan

LENGTH : 3.80 Kms.

PROJECT DESCRIPTION: 7.00M Wide Gravel Road

SUMMARY OF ITEMS OF WORK, QUANTITIES AND ESTIMATES

ITEM NO.	DESCRIPTION	UNIT	QUANTITY	UNIT COST	AMOUNT
100	Clearing & Grubbing	Ha.	7.60	₱5,245.00	₱39,862.00
105-a	Roadway & Drainage Exc. (Earth)	Cu. M.	34,000	16.00	544,000.00
105-b	Roadway & Drainage Exc. (Rock)	Cu. M.	2,000	50.00	100,000.00
106	Excavation for Structures	Cu. M.	1,150	20.00	23,000.00
107	Borrow	Cu. M.	1,800	40.00	72,000.00
108	Aggregate Sub-Base	Cu. M.	6,700	68.00	455,600.00
110	Foundation Fill	Cu. M.	60	70.00	4,200.00
200	Aggregate Base Course	Cu. M.	3,300	159.00	518,100.00
405	Concrete, Class "A"	Cu. M.	250	886.00	221,500.00
406	Reinforcing Steel	Kilo	10,700	8.70	93,090.00
412	Stone Masonry Wall	Cu. M.	1,000	350.00	350,000.00
413-1	24"ϕ RCCP	L. M.	240	290.00	69,600.00
413-2	36"ϕ RCCP	L. M.	180	480.00	86,400.00
413-3	48"ϕ RCCP	L. M.	60	780.00	46,800.00
500	Grouted Riprap	Cu. M.	1,200	310.00	372,000.00
516	Demountable Office & Camp Building	L. S.	-----	------	50,000.00
	TOTAL DIRECT COST				₱3,046,152.00
	Const. Engr'g and Adm. Overhead (6%)				1182,769.12
	Preliminary Engineering (-2%)				60,923.04
	Total Cost				₱3,289,844.16
	Say				₱3,290,000.00

NOTE: The above quantities and estimates are tentative only and subject to increase or decrease upon completion of the Detailed Engineering for the Project.

SUBMITTED BY:

VICENTE P. LAVIN
Staff Civil Engineer
Chief, Planning and Design Division

APPROVED:

DOMINGO B. ASTUDILLO-CESO II
Regional Director

PROPOSED TYPICAL ROADWAY SECTIONS

TARA COMMUNITY CENTER ACCESS ROAD

LENGTH: 3.80KMS. (APROX)

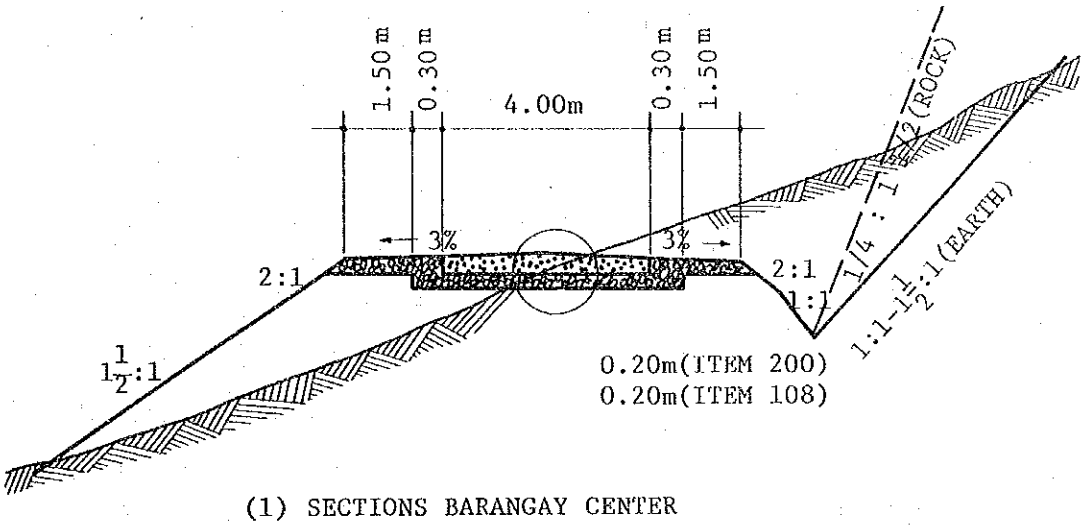

(1) SECTIONS BARANGAY CENTER

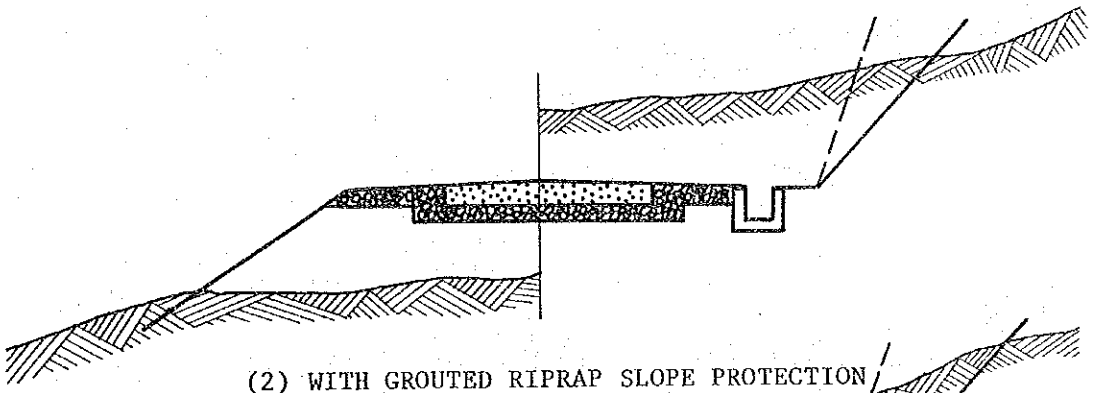

(2) WITH GROUTED RIPRAP SLOPE PROTECTION AND LINED DITCH

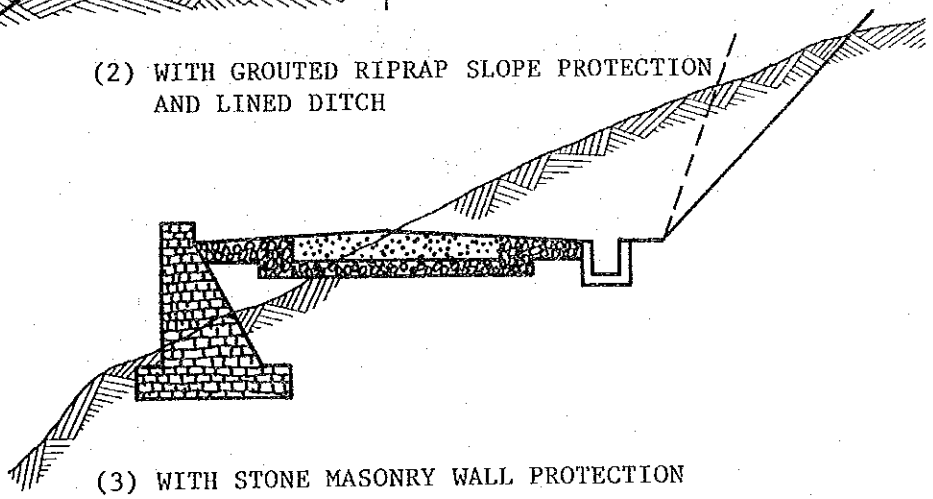

(3) WITH STONE MASONRY WALL PROTECTION

LOCATION PLAN OF THE PROPOSED
ACCESS ROAD TO COMMUNITY CENTER

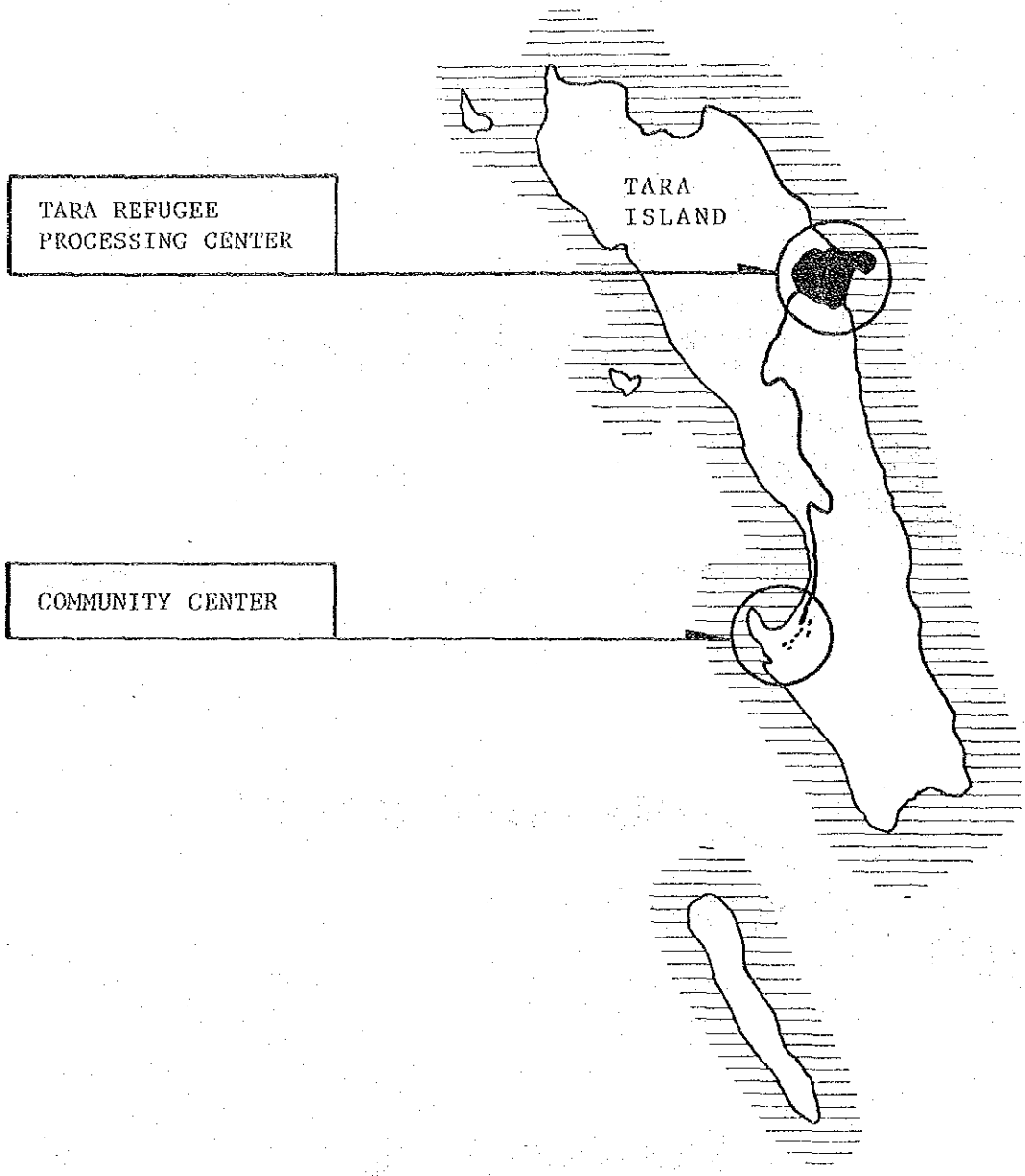

LOCATION PLAN

Not Drawn To Scale

PRELIMINARY ESTIMATE

PROJECT : Proposed Rehabilitation and Improvement of Tara Airstrip

LOCATION : Tara Island, Coron, Palawan

PROJECT DESCRIPTION: Gravel Surfaced

Basic Runway : 400M x 15M

Overall Airstrip: 460M x 30M

Apron : 70M x 40M

SUMMARY OF WORK ITEMS, QUANTITIES AND ESTIMATES

ITEM NO.	DESCRIPTION	UNIT	QUANTITY	UNIT COST	AMOUNT
100	Clearing and Grubbing	Ha.	1.40	₱5,245.00	₱7,343.00
105	Excavation	Cu. M.	3,500	16.00	56,000.00
106	Excavation for Structure	Cu. M.	300	20.00	6,000.00
107	Borrow	Cu. M.	6,750	40.00	270,000.00
108	Aggregate Sub-Base	Cu. M.	4,760	68.00	323,680.00
210	Foundation Fill	Cu. M.	20	70.00	1,400.00
200	Aggregate Base Course	Cu. M.	1,600	157.00	251,200.00
413	48"ϕ RCCP	L. M.	120	780.00	93,600.00
SPL	Removal of Obstructions,	------	-----	------	---------
	Markers, Markings	L. S.	-----	------	100,000.00

TOTAL DIRECT COST ----------	₱1,109,223.00
Const. Engr'g & Adm. Overhead (6%) -------	66,553.38
Preliminary Engineering ----------	22,184.46
Total Cost ----------	₱1,197,960.84
Say ----------	₱1,198,000.00

NOTE: The above quantities and estimates are tentative only and subject to increase or decrease upon completion of the Detailed Engineering for the Project.

SUBMITTED BY:

VICENTE P. LAVIN
Staff Civil Engineer
Chief, Planning and Design Division

APPROVED:

DOMINGO B. ASTUDILLO-CESO II
Regional Director

PROPOSED TYPICAL RUNWAY SECTION FOR THE PROPOSED REHABILITATION & IMPROVEMENT OF TARA AIRSTROP

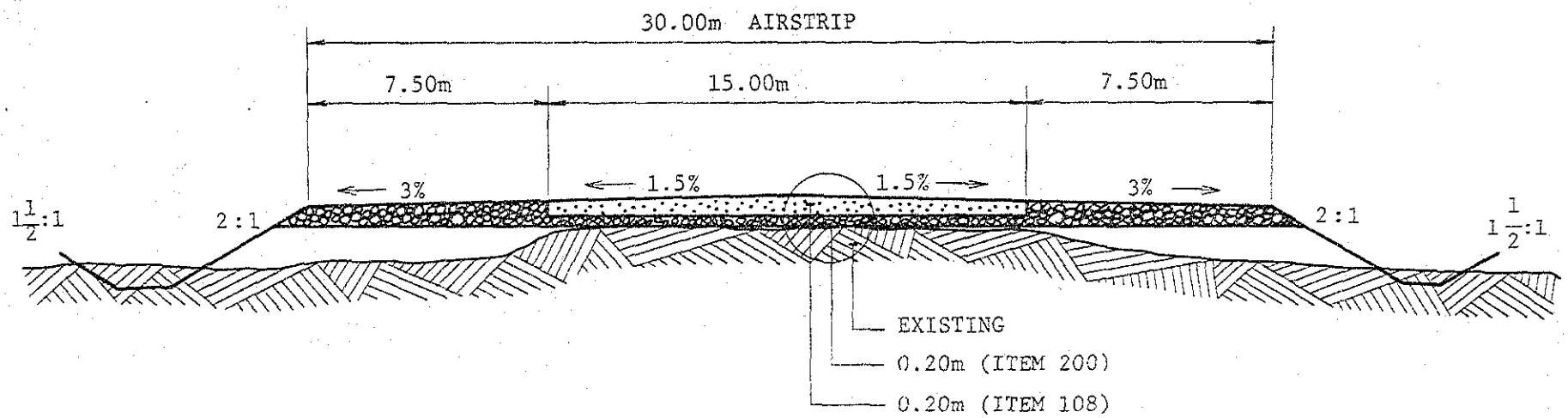

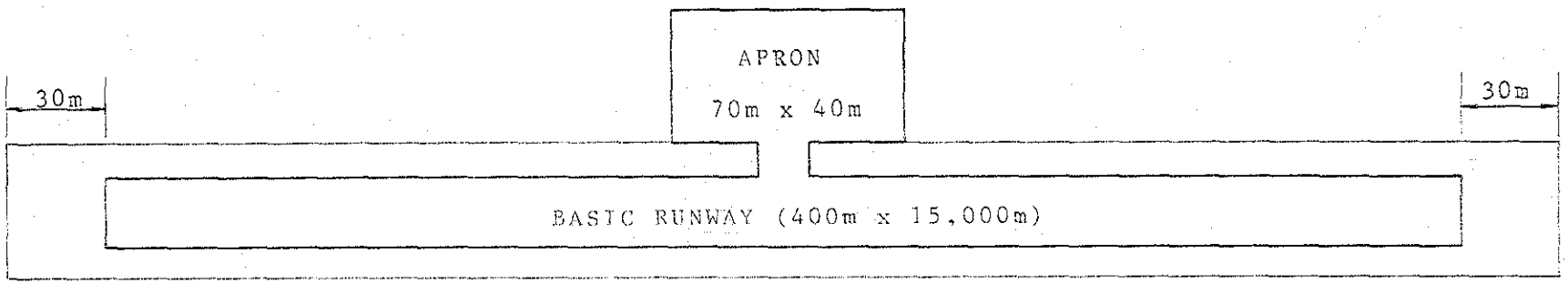

PROJECT IMPLEMENTATION SCHEDULE

Schedule (Month)

	1	2	3	4	5	6	7	8
I. CONSTRUCTION OF RCP NETWORK								
SCHEME I								
Activities								
A: Detailed Engineering (Surveys, field data gathering design, quantity estimates and preparation of final construction plan.)								
B: Bidding and Awards								
C: Construction (Mobilization)								
SCHEME II								
Activities								
A: Detailed Engineering (Surveys, field data gathering design, quantity estimates and preparation of final construction plan.)								
B: Bidding and Awards								
C: Construction (Mobilization)								
II. ACCESS ROAD TO THE COMMUNITY CENTER								
Activities								
A: Detailed Engineering (Surveys, field data gathering design, quantity estimates and preparation of final construction plan.)								
B: Bidding and Awards								
C: Construction (Mobilization)								
III. AIRSTRIP								
Activities								
A: Detailed Engineering (Surveys, field data gathering design, quantity estimates and preparetion of final construction plan.)								
B: Bidding and Awards								
C: Construction (Mobilization)								

PORT PROJECT AND SHORE PROTECTION WORKS FOR TARA ISLAND, PROVINCE OF PALAWAN

Yawao Point has a sandy shore but surrounded with coral reef extending to about 75 yards (69 meters) from the shore, then abruptly, a change of gradient from 1 fathom to 3 fathoms for a distance of about 100 yards (91 meters).

With this information, the following is proposed to be done for the Port of Tara Island.

Nature of work and estimate of cost:

1.	Rock Causeway approach = 4.00m. x 70.00m. cost @₱10,000 per 1.m.	₱700,000.00
2.	R.C. Wharf Approach - 6.00 x 85.0m. or 510 sq.m. @₱4,200/sq.m.	2,142,000.00
3.	R.C. Wharf 6.00 x 60.C0m. or 360 sq.m. @₱4,500/sq.m.	1,620,000.00
4.	Rock Mound Seawall 360 1.m. @₱4,000/1.m.	1,200,000.00
		₱5,662,000.00
	Say	5,700,000.00
5.	Mobilization Cost	300,000.00
	TOTAL COST	₱6,000,000.00

The work is estimated to be done in 300 days

NOTE:

Materials, labor and equipment will come from Manila.

PREPARED BY:

EDMUNDO G. ATANACIO
Supervising C. E. I

CHECKED BY:

GREGORIO O. CARRILLO
Chief, Designing Branch

SUBMITTED BY:

ANTONIO P. SELUDO
Officer-in-Charge
Ports, Harbors & Reclamation Division

FLOOD CONTROL AND DRAINAGE FACILITY FOR TARA ISLAND, PROVINCE OF PALAWAN

LOCATION: The project is located at approximately latitude 120°21', longitude 12°16' Tara Island, Province of Palawan.

GENERAL BACKGROUND:

The Philippines is among the ASIAN country which will provide settlement for Asian refugees. Tara Island situated in the Province of Palawan was choosen to be the Philippine Refugee Processing Center. However, its development will create needs of providing among others, flood control and drainage facilities to make it more useful and suitable for the purpose.

PROJECT DESCRIPTION:

The proposed flood control and drainage works in the area will consist of a checkgate for the control of salt water intrusion, and channel improvement of the outlet of the existing lagoon as well as to drain storm run-off from its area of 5.3 has. The lagoon will be utilized for recreation and/or socio-economic purposes.

The amount needed for the construction of the above project is ₱1,150,000.00 broken down as follows:

1.	Pre-construction expenses (for survy, etc.)	₱50,000.00
2.	Construction of two (2) of 2.00 m x 2.00 m	
	Checkgate	₱350,000.00
	Channel and Banks Improvement	750,000.00
	TOTAL	₱1,150,000.00

(See attached typical section in plate "A" and "E")

PREPARED BY:

REYNALDO E. MOLINA
Asst. Chief, Designing Section

NOTED:

PEDRO P. TERCINO
Chief Designing Section
FCDD-BPW

SUBMITTED BY:

RUBEN M. LANOT
Officer-In-Charge
Flood Control and Drainage Division

TYPICAL SECTION OF PROPOSED BANK CHANNEL IMPROVEMENT

PLATE "A"

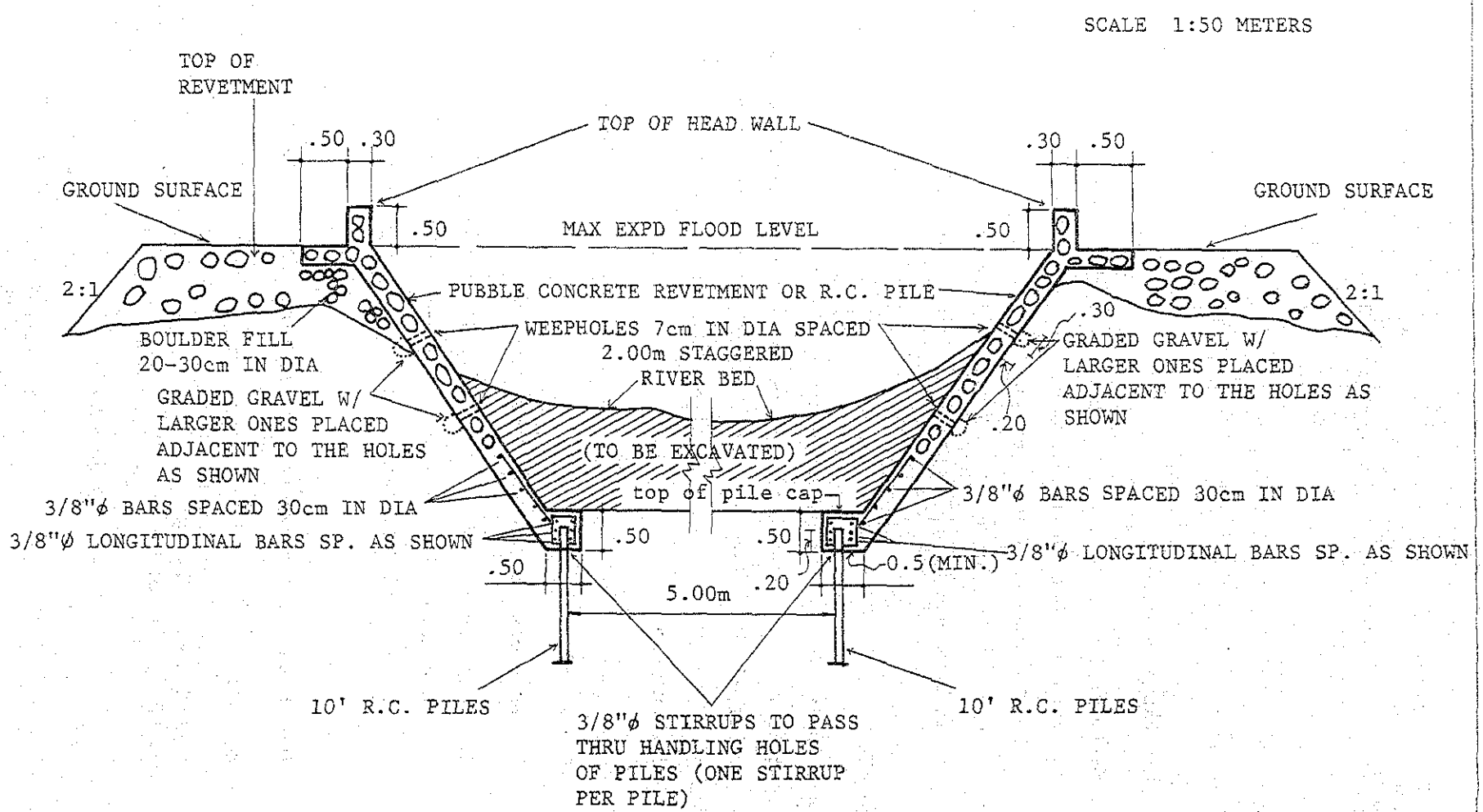

CHECKGATE SECTION

PLATE "B"

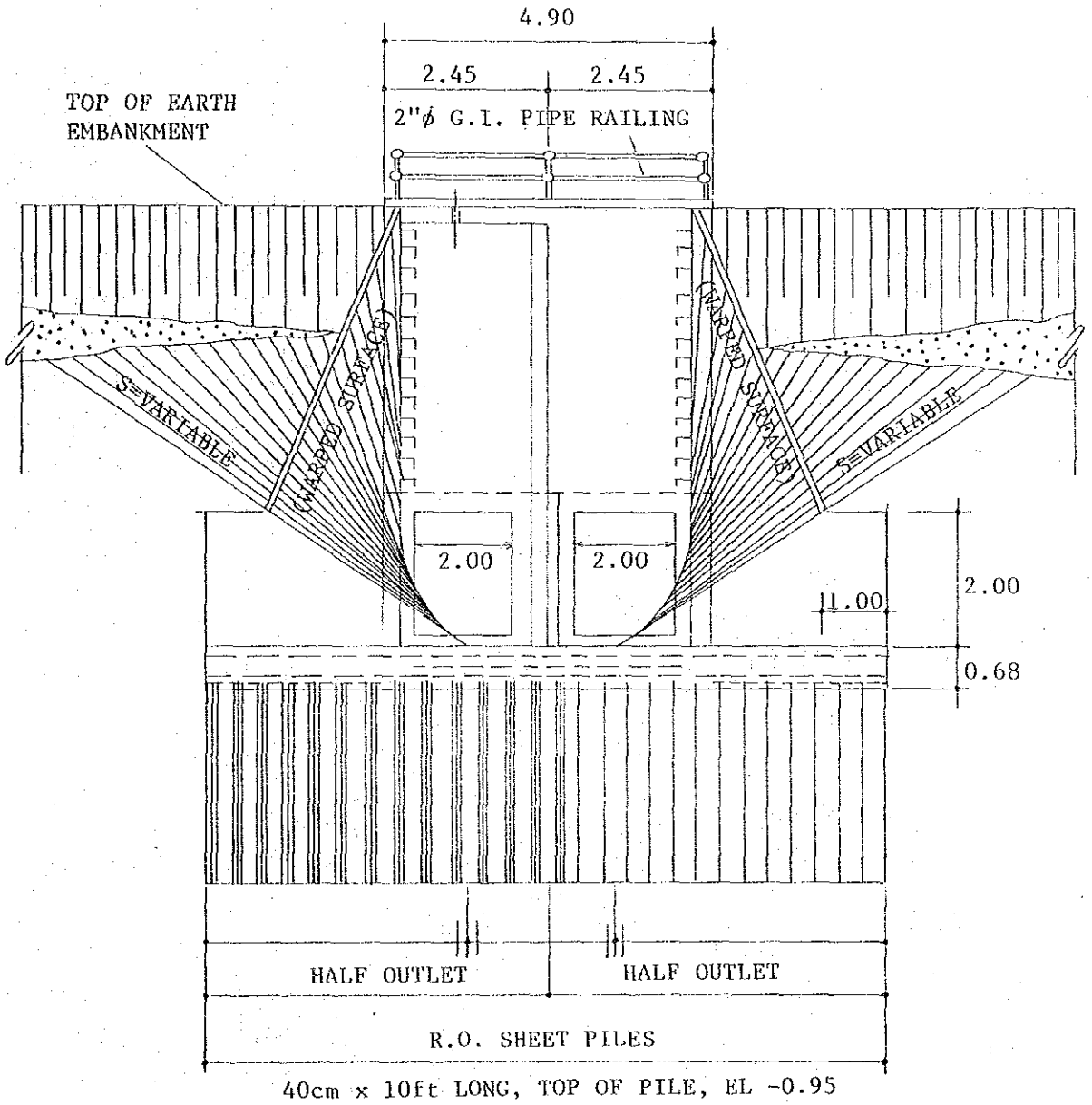

BILL OF MATERIALS
(Tara Refugee Hospotal)

I. CONCRETE WORK

4,946	bags cement	@₱ 16.00	₱ 79,136.00
309	cu.m. sand	40.00	8,360.00
413	cu.m. gravel	60.00	24,780.00
326	pcs. #3 x 20' steel bars	13.91	4,534.66
73	pcs. #3 x 25' -do-	17.39	1,269.47
30	" #3 x 30' -do-	20.86	625.80
407	" #3 x 35' -do-	20.34	9,906.88
117	" #3 x 40' -do-	27.82	3,254.94
284	" #5 x 20' -do-	36.34	10,320.56
179	" #5 x 25' -do-	45.42	8,130.18
16	" #5 x 30' -do-	54.50	872.00
148	" #5 x 35' -do-	63.60	9,412.80
39	" #5 x 40' -do-	72.72	2,836.08
178	" #9 x 20' -do-	70.99	12,636.22
272	" #7 x 35' -do-	124.23	13,790.56
482	sht 1/2" x 4' x 8' plywood	55.00	26,510.00
47,269	bd.ft. from lumber	1.80	85,084.00
22	roll #16 tie wire	210.00	4,620.00
24	kegs c.w. nails assorted	225.00	5,400.00
			₱331,479.75

II. MASONRY WORK

19,742	pcs. 4" x 8" x 18" CHB	@₱ 1.20	₱23,690.40
15,126	" 6" x 8" x 18" CHB	1.40	21,176.40
1,233	bags cement	16.00	19,728.00
156	cu.m. sand	40.00	6,240.00
65	cu.m. gravel	60.00	3,900.00
23	pcs. #3 x 20' steel bars	13.91	319.00
688	" #3 x 25' -do-	17.39	11,964.32
26,104	" 4-1/4" x 4-1/4" glazed tiles	0.75	19,578.00
4,721	" 4-1/4" x 4-1/4" unglazed tiles	0.65	3,068.65
10	bags white cement	72.00	720.00

1,680 bags triangular beads	0.95	1,596.00
		₱111,981.70

III. CARPENTRY WORKS

Double wood partitions

a)	366 pcs. 1/4" x 4'x8' plywood	@₱ 25.00	₱ 9,150.00
	292 " 2"x4"x10' vertical studs	1.80	3,503.99
	584 " 2"x4"x10' horizontal studs	1.80	7,007.99
	41 " 3"x6"x14' wood base	2.50	2,152.50
	234 " 5/8"x10' anchor bolts	4.50	1,052.00
	3 kegs assorted nails	225.00	675.00
			₱ 23,542.48

b) Ceilings

398 pcs. 1/4'x8' plywood		@₱ 25.00	₱ 9,950.00
6,033 " 12"x12" accoustic tiles		4.50	27,148.50
106 " 2"x4"x16' ceiling joist -	1,130.67 bf		
106 " 2"x4"x14' -do-	989.33 "		
331 " 2"x2"x16' nailers	1,765.33 "		
888 " 2"x2"x10' "	2,960.00 "		
46 " 2"x2"x8' "	122.67 "		
	6,968	b.f.1.80	₱ 12,542.40
4.5 keg assorted c.w. nail		225.00	1,012.50
			50,653.40

c) Cabinet

38 pcs. 3/4"x4'x8' plywood		@₱ 75.00	₱ 2,850.00
5 " 1/2"x4'x8' "		53.00	265.00
4 " 1/4"x4'x8' "		25.00	100.00
3 " 1/2"x4'x8' narra plywood		82.00	246.00
26 " 1/16x4'x8' formica top		72.00	1,872.00
24 " 2"x2"x6'	48.00 bf		
69 " 2"x2"x8'	184.00 "		
23 " 2"x2"x10'	76.67 "		
5 " 2"x2"x12'	20.00 "		
13 " 2"x2"x14'	60.67 "		
	236.00 bf	@₱ 1.80	424.80

1.5 keg assorted c.w. nail		225.00	387.50
			₱ 6,095.30

d) Door Jambs

54 pcs.	2"x6"x10'	yacal jambs	540.00 bf		
110 "	2"x6"x8'	-do-	880.00 "		
16 "	2"x6"x12'	-do-	192.00 "		
4 "	2"x6"x14'	-do-	56.00 "		
			1,668.00 b.f.	@₱ 3.20	₱ 5,337.60
38 keg assorted c.w. nail				5.00	190.00
					₱ 5,527.60
					₱85,818.78

IV. ROOF FRAMING & ROOFING:

T-1

58 pcs.	3"x6"x16'	Top chord	1,392.00 bf		
58 "	2"x5"x16'	bet. chord	773.33 "		
60 "	2"x5"x14'	-do-	700.00 "		
50 "	3"x4"x12'	diag. member	600.00 "		
14 "	3"x4"x10'	-do-	140.00 "		
12 "	2"x6"x14'	collar plates	168.00 "		
8 "	3"x5"x16'	splice block	160.00 "		
10 "	3"x5"x10'	wood block	125.00 "		
17 "	2"x6"x10'	show plate	170.00 "		
			4,228.33 b.f.	@₱ 2.80	₱11,839.32
62 "	1/2"x1.00 m T.R. w/2"x2"x1/4" std. steel washer			@₱ 4.50	279.00
34 "	5/8"ϕx1.35 m T.R. w/2-1/2"x2-1/2" x 3/8" std. steel washer			@₱ 5.00	170.00
24 "	4"x4"x1/4"x4" long angle			4.50	108.00
402 "	5/8"ϕx7" belts w/nuts and washer			1.50	603.00
688 "	3/4"ϕx7" belts w/nuts and wahser			1.50	1,032.00
					₱14,031.32

T-1A

16 pcs.	3"x6"x16'	Top chord	384.00 bf
16 "	2"x55x16'	bet. chord	213.33 "
18 "	2"x5"x14'	-do-	210.00 "
4 "	3"x4"x12'	members	48.00 "

4 pcs.	3"x4"x14' members	56.00 bf			
2 "	2"x6"x16' collar plate	32.00 "			
2 "	3"x5"x18' splice block	45.00 "			
1 pc.	3"x5"x14' wood block	17.50 "			
2 pcs.	2"x6"x12' show plates	24.00 "			
		1,029.83 b.f.	@₱ 2.80		₱ 2,883.52
8 "	7/8 ϕx1.35m T.W. w/3"x5"x5/8" std. steel washer		5.00		40.00
8 "	1/2"ϕx1.00M T.R. w/2"x2"x1/4" std. steel washer		4.50		36.00
358 "	5/8x7" bolts w/nuts and washer		1.50		537.00
548 "	3/4"x7" bolts w/nuts and washer		1.50		822.00
16 "	4"x4"x1/4"x4" long angle		4.50		72.00
					₱ 4,390.52

T-1B

36 pcs.	2"x6"x16' top chord	576.00 bf			
36 "	2"x5"x16' bet. chord	480.00 "			
23 "	3"x4"x14' members	322.00 "			
3 "	3"x4"x8' "	24.00 "			
2 "	2"x5"x12' splice plates	20.00 "			
		1,422.00 b.f.	@₱ 2.80		₱ 3,981.60
26 "	4"x4"x1/4" long angle		4.50		117.00
120 "	5/8"ϕx5" bolts w/nuts and washer		1.50		180.00
24 "	3/4"ϕx5" -do-		1.50		36.00
					₱ 4,314.60

HT-1

16 pcs.	3"x6"x12' top chord	288.00 bf			
32 "	2"x5"x12' bott. chord	320.00 "			
12 "	3"x4"x12' members	144.00 "			
2 "	2"x6"x8' shoe plates	16.00 "			
3 "	3"x5"x8' splice plates	30.00 "			
		780.00 b.f.	@₱ 2.80		2,234.40
8 "	1/2ϕx1.15M T.R. w/2"x2"x1/4" std. steel washer		5.00		40.00
8 "	1/2"ϕx0.80 M T.R. w/2"x2"x1/4" std. stl. washer		4.50		36.00
12 "	4"x4"x1/4"x4" steel angle		4.50		54.00
8 "	5/8"ϕx10" bolts w/nuts and washer		1.50		12.00

44 pcs.	5/8"ϕx8' -do-		1.50	66.00
				₱ 2,442.40

HT-2

4 pcs.	3"x6"x16" top chord	96.00 bf		
8 "	2"x5"x16' bott chord	106.67 "		
6 "	3"x4"x12' members	72.00 "		
		274.00 bf	@₱ 2.80	₱ 767.20
6 "	4"x4"x1/4"x4" steel angle		4.50	27.00
6 "	5/8"ϕx10" bolts w/nuts and washer		1.50	9.00
18 "	3/4"ϕx8" -do-		1.50	27.00
				₱ 830.20

Miscellaneous

17 pcs.	2"x6"x12' rafters (guijo)	204.00 bf		
16 "	2"x4"x8' purlins (apitong)	84.33 "		
588 "	2"x4"x10' -do-	3,920.00 "		
20 "	2"x4"x12' -do-	160.00 "		
28 "	2"x4"x14' -do-	261.33 "		
14 "	2"x4"x16' -do-	149.33 "		
32 "	2"x5"x10' bracing	266.67 "		
50 "	2"x5"x12' -do-	500.00 "		
80 "	2"x6"x12' wood plates	960.00 "		
		6,302.66 bf	@₱ 2.00	₱ 12,605.32
16 "	1/4"x2"x20' twisted angle		4.50	72.00
5 kegs	assorted nails		260.00	1,300.00
				₱ 14,548.52

Roofing

339 pcs.	#26x8' G.I. roofing	@₱37.60	₱ 12,746.40
343 "	#26x9' -do-	42.30	14,508.90
21 "	#24x8' plain G.I. Ridge roll	26.80	562.80
69 keg	roofing nails	7.50	517.50
30 pcs.	nicolite bar	12.50	375.00
4 liters	muriatic acid	2.50	10.00
			₱ 28,720.60
			₱ 69,278.16

V. FINISHES

171 sqm.	cement tiles floor finish	@₱ 19.00	₱ 3,249.00
800 -do-	vinyl tiles floor finish	35.00	28,000.00
56 -do-	terrazo w/brass strain flr. finish	93.00	5,219.15
10.22 "	pea gravel washout	27.00	275.94
15.35 "	synthetic adobe finish	62.00	951.00
889 "	asphalt waterproofing (5 ply)	93.00	82,677.00
			₱120,372.80

VI. FABRICATED MATERIALS & HARDWARE

AD-1	2 sets 2.50x2.70 alum. doors w/fixed be transom 13.50 sq.m.	@₱900.00	₱ 12,150.00
AD-1A	4 sets 2.10 x 2.50 double door action for floors 21.00 sq.m.	900.00	18,900.00
D-1	4 sets 1.50x2.70 hollow core flush type door w/fixed transom & double action 16.20 sq.m.	563.00	2,252.00
D-2	1 set 1.20x2.70 hollow core flush type door w/fixed transom 3.24 sq.m.	563.00	563.00
D-3	2 sets 2.0x2.10 hollow core flush type door w/fixed transom & double action 8.40 sq.m.	563.00	1,126.00
D-4	4 sets 1.40x2.10 hollow core flush type door & double action 11.76 sq.m.	563.00	2,252.00
D-5	10 sets 1.20x2.70 hollow core flush type door w/fixed transom 32.40 sq.m.	563.00	5,630.00
D-6	4 sets .90x2.10 hollow core flush type door & double action 7.56 sq.m.	563.00	2,252.00
D-7	3 sets .90x2.70 hollow core flush type door w/fixed transom & double action 7.29 sq.m.	563.00	1,689.00
D-8	14 sets .90x2.10 hollow core flush type door 26.46 sq.m.	450.00	6,300.00
D-9	8 sets .80x2.10 hollow core flush type door 13.44 sq.m.	450.00	3,600.00
D-10	24 sets .70x2.10 hollow core flush type door 35.28 sq.m.	450.00	10,800.00
D-11	3 sets .60x2.10 hollow core flush type door 3.78 sq.m.	450.00	1,350.00

Windows:

JW-1	2 sets 0.70x0.80 fixed glass jalousie 1.12 sq.m.	@₱120.00	134.40

W-1	50 sets 1.80x2.55 @6 panels casement type steel window w/fixed transom 229.5 sq.m.	@₱300.00	68,850.00
W-2	6 sets 1.80x1.70 @4 panels casement type steel window w/fixed transom 18.36 sq.m.	300.00	5,508.00
W-3	4 sets 0.85x1.80 @2 panels casement type steel window w/fixed transom 612 sq.m.	300.00	1,836.00
W-4	4 sets 1.20x2.40 @2 panels projected type steel window w/fixed transom 11.52 sq.m.	300.00	3,456.00
W-5	4 sets 1.20x1.60 @2 panels projected type steel window w/fixed transom 7.68 sq.m.	300.00	2,304.00
W-6	22 sets 1.20x.80 @1 panel projected type steel window w/fixed transom 21.12 sq.m.	300.00	6,336.00
W-7	2 sets 1.20x.60 @1 panel projected type steel window with fixed transom 1.44 sq.m.	300.00	432.00
W-7a	1 set .60x.60 projected type steel window 0.36 sq.m.	300.00	108.00
			₱157,828.40

VII.	PAINTING: A - 2,433 sq.m.	@₱11.00	₱ 26,763.00
VIII.	ELECTRICAL: A = 1,548 sq.m.	@₱109.00	₱168,732.00

IX. PLUMBING

1) Sanitary System

A) Fixtures & Accessories

17 sets water closet (phil. std.) complete w/angle valve 1/2"x1/4" (PP) flexible supply pipe w/c.p. nipple 1/2"x2" long	@₱600.00	₱10,200.00
2 sets lavatory 24"x24" (phil. std.) complete fittings & accessories	520.00	1,040.00
17 sets lavatory 20"x20" lavatory (phil. std.) complete fittings & accessories	480.00	8,160.00
14 sets lavatory (phil. std.) 20"x12" w/complete fittings and accessories	360.00	8,820.00
33 pcs. floor drain 4"x4" slat type	23.00	759.00
17 " toilet paper holder	25.00	425.00
13 " looking glass mirror (.50x.70m) w/frame plywood backing	80.00	1,040.00
17 " towel bar 24" long	30.00	510.0
17 " looking glass mirror (0.50x0.80M) w/frame plywood backing	95.00	1,615.00
		₱32,664.00

B) G.I. Waste Pipe & Fittings

58	pcs.	C.I. waste pipe	4"ϕx5'	S.H. D.T.	@₱67.20	3,897.60
28	"	C.I. wates pipe	4"ϕx5'	D.H. "	75.60	2,116.80
35	"	-do-	2"ϕx5'	S.H. "	45.09	1,578.15
15	"	-do-	2"ϕx5'	D.H. "	49.03	725.45
16	"	C.I. Wye	4"ϕ	"	27.30	436.80
31	"	" "	2"ϕ	"	16.20	502.20
40	"	" "	4"ϕx2"ϕ	"	26.75	1,070.00
17	"	" P-trap	4"ϕ	"	20.80	353.60
66	"	" "	2"ϕ	"	17.00	1,122.00
6	"	" Sanitary Tee	4"ϕ	"	31.50	189.00
18	"	" Cleanout	4"ϕ	"	22.00	396.00
10	"	" "	2"ϕ	"	18.00	180.00
20	"	" 1/8 bend	4"ϕ	"	15.35	307.00
37	"	" 1/8 bend	2"ϕ	"	15.55	501.36
17	"	" double hub	4"ϕ	"	18.50	314.50
28	"	" " "	2"ϕ	"	14.70	411.60
12	"	" 1/4" bend "	2"ϕ	"	13.55	162.60
6	"	" " "	4"ϕ	"	15.35	92.10
64	kls.	plumbingoalam			7.50	480.00
190	"	pig lead			13.00	2,470.00
						₱17,316.75

C) G.I. Pipes & Fittings:

11	pcs.	G.I. Pipe	2"ϕx20' sch. 40	@₱240.00	₱ 2,640.00
16	"	-do-	3"/4"ϕx20' " "	78.00	1,248.00
18	"	-do-	1/2"ϕx20' " "	60.00	1,080.00
4	"	G.I. Elbow	2"ϕ	21.00	84.00
2	"	" Tee	2"ϕ	23.00	46.00
14	"	" "	3/4"ϕ	12.00	168.00
8	"	" Union Pat.	2"ϕ	14.00	112.00
22	"	" Elbow	3/4"ϕx90°	8.60	189.20
43	"	" "	1/2"ϕx90°	7.80	335.40
50	"	" Tee	3/4"ϕx1/2"ϕ	11.00	550.00
12	"	" "	2"ϕx3/4"ϕ	23.00	276.00
25	"	" Union Patente	3/4"ϕ	9.40	235.00
60	"	" -do-	1/2"ϕ	7.20	422.00
2	"	" Nipple	2"ϕx8" long	10.70	21.40

33 pcs. G.I. Nipple 1/2"ϕx6" long	7.10	234.30
10 " " hacksaw blade (blude moon)	15.00	15.00
1 gal. red lead paint	60.00	60.00
		₱ 7,861.30

2) Septic Value:

860 pcs. 6"x8"x16" CHB wall	@₱	1.50	₱ 1,290.00
80 bags cement portlant		16.00	1,280.00
3 cu.m. wash sand		40.00	120.00
6 cu.m. gravel		60.00	360.00
250 bd. ft. form lumber		1.80	450.00
10 kls. c.w. nail #4		5.00	50.00
8 kls. c.w. nail #2		5.00	40.00
54 pcs. stiffener #3x20'		13.91	751.14
1/2 roll tie wire #16		210.00	105.00
			₱ 4,446.14
			₱62,288.19

SUMMARY

CONCRETE WORKS		₱ 331,479.75
MASONRY WORKS		111,981.70
CARPENTRY WORKS		85,818.78
ROOF FRAMING AND ROOFING		69,278.16
PLUMBING		62,288.19
	MATERIALS	660,846.58
	LABOR	231,175.97
FINISHES		120,372.80
FABRICATED MATERIALS & HARDWARES W/INST.		173,611.24
PAINTING		26,763.00
ELECTRICAL		168,732.00
Total Cost of Materials & Labor		₱ 1,381,501.59
	Contingencies	74,691.83
	Supervision	62,741.14
	Profit	163,126.96
	Tax	56,368.48
	M.Q.T.C.	28,184.24
Estimated Contract Cost		₱ 1,766,614.24
Engineering Overhead		93,947.48
Estimated Project Cost		₱ 1,860.561.72
	Say	1,870,000.00
Estimated 60% Increase in Costs		1,122,000.00
Estimated Adjusted Cost		₱ 2,992,000.00

SUMMARY OF FACILITIES AND USAGE

RPC FOR 7,000 REFUGEES

FACILITY	ESTIMATED COST (IN MILLION OF PESOS)
1. Water system	₱ 4.70
2. Electrical system	1.10
3. Road nets	11.59
4. Port facilities	6.00
5. Dormitories	25.77
6. Airport facilities	2.87
7. Hospital Facilities	2.56
8. Communication facilities	1.50
9. Security facilities	2.40
10. Administration facilities	1.64
11. Communal bath & toilet facilities	3.60
12. Mess & communal kitchens	3.42
13. Flood control & drainage system	1.13
14. Recreational/athletic facilities	0.96
15. Workshop facilities	0.19
16. Educational	0.57
Total ---------	₱ 70.00M

SUMMARY OF COST ESTIMATES

RPC FOR 7,000 REFUGEES

AGENCY		PROJECT	ESTIMATED COST (Million of Pesos)
1.	MPH	RPC road nets	₱ 8.30
2.	MPH	Access road to Community Center	3.29
3.	MPH	Rehabilitation/Improvement of Airstrip	1.20
4.	BPW	Pier and Beaching Area	6.00
5.	BPW	Flood Control & Drinage System	1.13
6.	MOH	Hospital	2.30
7.	NPC	Electric Power System	1.10
8.	BPW	Water System	4.70
9.	MPWTC	Communication System	1.50
10.	PN	Other bldg/facility requirements	40.48
		Grand Total ----------	₱ 70.00M

SUMMARY OF COST ESTIMATES FOR

TARA RPC PROJECT

AGENCY: PHILIPPINE NAVY

PROJECT	ESTIMATED COST (In Million of Pesos)
1. Admin. bldg.	₱ 0.43
2. Guest house & staff house	0.75
3. Administrative qtrs	0.46
4. Mess hall/canteen	0.22
5. Work shop/garage	0.19
6. Aircraft hanger	1.67
7. Signal tower	0.25
8. Dental dispensary	0.26
9. Multi-purpose bldg.	0.26
10. Refugee housing	25.77
11. Communal toilet & Bath	3.60
12. Communal kitchen & washing shed	3.20
13. Recreational & athletic facilities (basketball, volleyball, tennis courts & other facilities)	0.70
14. Security barracks	0.30
15. Security fence	1.85
16. Educational facilities	0.57
Total ----------	₱ 40.48M

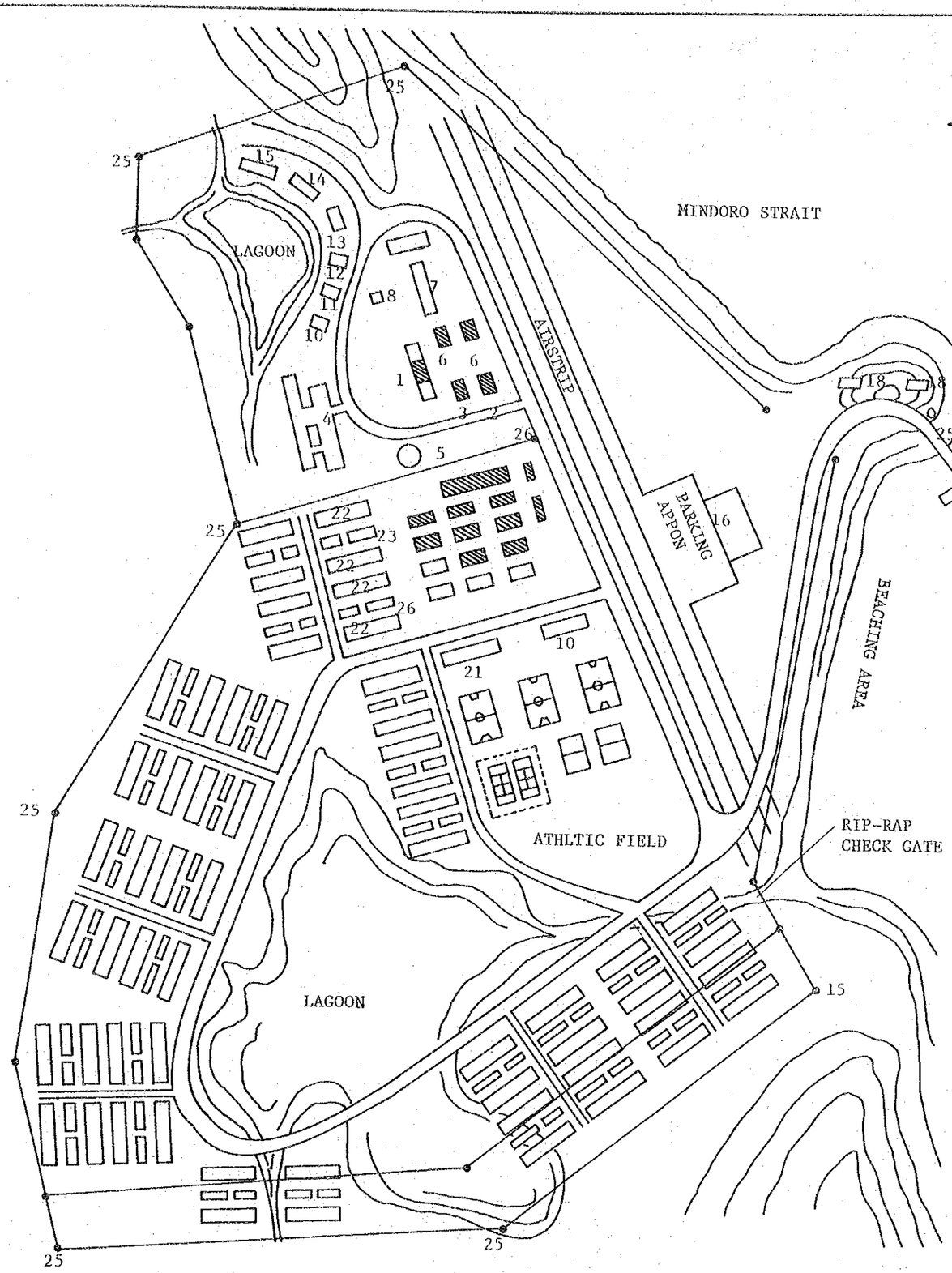

SITE DEVELOPMENT PLAN

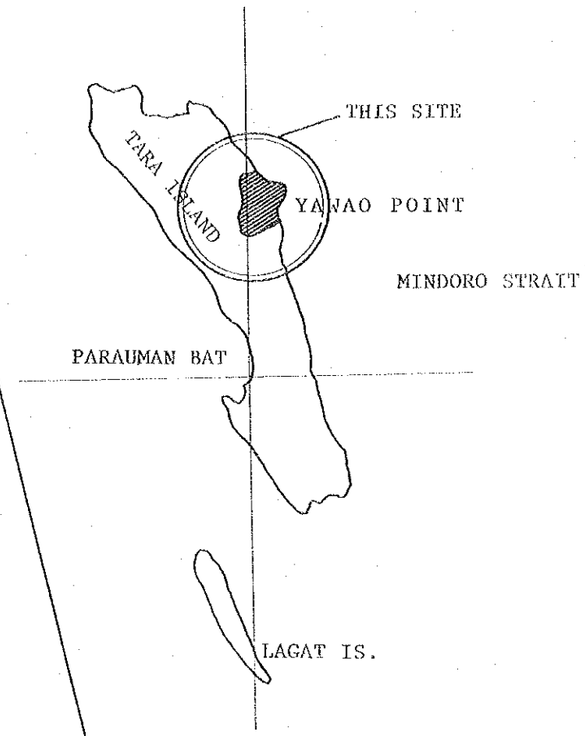

LOCATION PLAN

EXISTING STRUCTURES

PROPOSED STRUCTURES

LEGEND:

1) ADMIN BLDG.
2) SECURITY OFFICE BLDG.
3) DENTAL BLDG.
4) HOSPITAL (120 BEDS)
5) ELEV WATER TANK PUMPHOUSE
6) WAREHOUSE/RODEGA
7) WORKSHOP GARAGE
8) POWER HOUSE
9) SECURITY BARRACKS
10) GUEST HOUSE
11) ASST ADMINISTRATORS QTRS
12) ADMINISTRATORS QTRS
13) MESS HALL/CANTEEN
14) STAFF HOUSE (MARRIED)
15) STAFF HOUSE (SINGLE)
16) AIRCRAFT HANGAR
17) PIER
18) COMMUNICATIONS BLDG.
19) SIGNAL TOWER
20) MULTIPURPOSE BLDG.
21) SCHOOL HOUSE
22) REFUGEE HOUSING
23) REFUGEE COMMUNAL TOILET & BATHS
24) REFUGEE COMMUNAL KITCHEN & WASHING
25) GUARD POST
26) CHECK POINT

JICA